BUCKEYE, AZ

PLEASE SILENCE ALL ELECTRONIC COMMUNICATION DEVICES. THANK YOU.

NOTICE OF POSSIBLE QUORUM OF THE CITY OF BUCKEYE PLANNING AND ZONING COMMISSION OR OTHER COUNCIL APPOINTED BOARD: PLEASE NOTE THAT THERE MAY BE A QUORUM PRESENT BUT THERE WILL BE NO VOTING TAKING PLACE BY THE CITY PLANNING AND ZONING COMMISSION OR OTHER COUNCIL APPOINTED BOARD AT THIS MEETING.

CITY OF BUCKEYE
REGULAR COUNCIL MEETING
DECEMBER 17, 2024
AGENDA

City Council Chambers
530 East Monroe Avenue
Buckeye, AZ 85326
6:00 p.m.
The doors will be open to the public at least 15 minutes prior to the start time of the meeting.

Accessibility for all persons with disabilities will be provided upon request. Please telephone your accommodation request (623) 349-6911, 72 hours in advance if you need a sign language interpreter or alternate materials for a visual or hearing impairment.

Voting Members will either attend in person or by telephone conference call or video presentation. Items listed may be considered in any order.

Pursuant to A.R.S. § 38-431.03(A)(3) the Council may, by majority vote, recess or adjourn to executive session at one or more times during the meeting, as needed to confer with the City Attorney for legal advice regarding any item listed on this agenda.

Abstention has the same meaning as Recusal in the City of Buckeye Rules of Procedure (Section 6.2)

1. Call to Order/Invocation/Pledge of Allegiance/Roll Call

2. Comments from the Public- Members of the audience may comment on any non-agenda item of interest.

3. Awards/Presentations/Proclamations

4. CONSENT AGENDA ITEMS / NEW BUSINESS
Approval of items on the Consent Agenda - All items with an (*) are considered to be routine matters and will be enacted by one motion and vote of the City Council. There will be no separate discussion of these items unless a Council member requests. This section may include the approval of Minutes from previous meetings.

***4.A** Council to take action on a 5-year contract between the City of Buckeye and AXON Enterprise,

Inc., relating to the purchase of new tasers along with enhanced training applications; and authorizing the City Manager to execute the agreement.
Summary: The contract with Axon Enterprise, Inc., is to purchase new tasers and associated equipment for all sworn law enforcement personnel. The Department has requested to change from the Taser 7, to the Taser 10, and the contract will begin March 2025.
Staff Liaison: Robert Sanders, Chief of Police, rsanders@buckeyeaz.gov, (623) 349-6430

***4.B** Council to take action on approving the Second Amendment to the Cooperative Purchase Agreement between the City of Buckeye and Axon Enterprise, Inc., relating to the retention and acquisition of new body cameras and Tasers along with enhanced training applications; and authorizing the City Manager to execute and deliver said Second Amendment.
Summary: The Buckeye Police Department would like to increase the current contract with AXON Enterprises, Inc. by increasing the not-to-exceed amount from $1,137,245.60 to $1,517,885.60. This will allow for Buckeye PD to maintain the current number of Tasers, body cameras, and subscriptions to AXON servers, software, and ancillary equipment.
Staff Liaison: Robert Sanders, Chief of Police, rsanders@buckeyeaz.gov, (623) 349-6430

***4.C** Council to take action on a final plat titled Homes at Susan Ranch, generally located east of the northeast corner of Miller and Lower Buckeye Roads.
Summary: The applicant is requesting approval of a final plat titled Homes at Susan Ranch, which is generally located east of the northeast corner of Miller and Lower Buckeye Roads. The plat consists of approximately 22.80 acres and includes 144 single-family residential cluster lots at 6.32 dwelling units per acre, 4.60 acres of landscaped open space, parks, recreation areas, and trails. CVL Consultants requested the final plat on behalf of Susan Ranch, LLC. The approval of this final plat will allow continued development of traditional single-family residences within the City of Buckeye.
Staff Liaison: Andrea Marquez, Senior Planner, amarquez@buckeyeaz.gov, (623) 349-6220

***4.D** Council to take action on Resolution No. 82-24, accepting a Petition for Formation of a Street Lighting Improvement District (SLID); declaring its intention to form a SLID; designating such District as the “City of Buckeye Street Lighting Improvement District No. SLID 2024-005”; providing the annual levy of taxes or assessments equally apportioned upon all of the non-public property owners in the District to purchase energy for the lighting of public streets and parks within and adjacent to the District; and ordering recording and filing of this Resolution. SLID generally covers the shopping center located at the southeast corner of Miller and Broadway Road.
Summary: Street Light Improvement District (SLID) creation for the southeast corner of Miller and Broadway Road. SLIDs are established to purchase (and not generate) energy for street lighting or public park lighting within the District and adjacent streets so that the costs are not borne by the City in its Highway User Revenue Fund.
Staff Liaison: Ron Moll, City Engineer, rmoll@buckeyeaz.gov, (480) 623-8442

***4.E** Council to take action on a Minor Subdivision titled "Yuma Climate Controlled Self Storage" concerning approximately 5.7 acres of real property located at the southwest corner of West Yuma Road and South 247th Avenue.
Summary: The applicant is requesting approval of a Minor Subdivision titled "Yuma Climate Controlled Self Storage" on approximately 5.7 acres of real property located at the southwest corner of West Yuma Road and South 247th Avenue. The proposed Minor Subdivision divides

the parcel into two lots, dedicates right-of-way for both Yuma Road and 247th Avenue, and dedicates public utility and reciprocal access easements. Once subdivided, the owner intends to develop 3.34-acre Lot 1 with a self-storage facility, reserving 1.53-acre Lot 2 for future development under the property's Commercial Center (CC) zoning.
Staff Liaison: Patricia Cooley, Planner I, pcooley@buckeyeaz.gov, (623) 349-6233

***4.F** Council to take action on a Minor Subdivision titled "The Mix" on approximately 30.02 net acres of property located at the southeast corner of Verrado Way and Roosevelt Street.
Summary: The applicant requests approval of a Minor Subdivision on behalf of the property owner Banner Health, for a Minor Subdivision on approximately 30.02 net acres of property located at the southeast corner of Verrado Way and Roosevelt Street. The proposed Minor Subdivision divides the existing parcel into five lots, dedicates public right-of-way for Roosevelt Street, Verrado Way, and Fillmore Street, and dedicates various easements to facilitate the development of the site with "The Mix on Roosevelt", a horizontal mixed-use project consisting of separate but integrated retail and multi-family residential components. The City Council approved a rezoning of this site to Planned Area Development on November 19, 2024.
Staff Liaison: Ken Galica, Planning Manager, kgalica@buckeyeaz.gov, (623) 349-6214

***4.G** Council to take action on the appointment of John Gaylord, Esq., as an Administrative Hearing Officer for the City of Buckeye to hear Appeals of Municipal Actions pursuant to A.R.S. § 9-500.12, et seq. and City Code Chapter 7, Article 8, Section 8.13.3.
Summary: State law requires the City have one or more administrative hearing officers to hear matters arising under Arizona Revised Statute. § 9-500.12, relating to land use dedications, exactions, and takings. Buckeye City Code Chapter 7, Article 8, Section 8.13.3, requires the hearing officer to be appointed by the City Council.
Staff Liaison: Brian Craig, Development Services Director, bcraig@buckeyeaz.gov, (623) 692-7616

***4.H** Council to take action to approve descoping and reducing the budgets for two (2) Capital Improvement Projects (CIP) for Fiscal Year 25, namely $1,250,000 from CIP No.107910 Arizona Water Company Water Line Interconnect and $750,000 from CIP No. 102440 Valencia System Water Mains Upgrade; to reestablish CIP No.105910 EPCOR Water Line Interconnect, in the amount of $2,000,000; and to authorize and direct the Mayor, City Manager, City Attorney, and City Clerk to take all steps necessary to carry out the purpose and intent of the CIP No.105910 funding.
Summary: This request seeks funding in the FY25 Capital Budget to reestablish the project to complete the construction of the interconnect with EPCOR, a critical water infrastructure project. In FY24, the project was designed, and construction of the water line in Sienna Hills Parkway was completed. Construction of the actual interconnect portion of the project was delayed due to a delay in developing the Interconnect Agreement with EPCOR, pushing construction into FY25. The agreement with EPCOR is nearing completion, allowing for the construction to resume, which is anticipated to be completed in Spring 2025.
Staff Liaison: Terry Lowe, Water Resources Director, tlowe@buckeyeaz.gov, (623) 349-6121

***4.I** Council to take action on Change Order No. 1 (Contract No. 2025036) between the City of Buckeye and Mountain States Pipe & Supply Co.; and authorize the City Manager to execute said contract.
Summary: Water Resources is requesting approval to increase the contract amount with

Mountain States Pipe & Supply Co. from $224,000 to a not to exceed (NTE) of $400,000 to increase the department's ability to keep pace with the city's growth and replace aged and damaged Advanced Metering Infrastructure (AMI) parts and equipment.
Staff Liaison: Terry Lowe, Water Resources Director, tlowe@buckeyeaz.gov, (623) 349-6102

***4.J** Council to take action on Change Order #1 to the Cooperative Contract Purchase Addendum (CCPA), No. 2023061 between the City of Buckeye and Fortiline, Inc; and authorize the City Manager to execute and deliver said contract.
Summary: The City holds a Cooperative Contract Purchase Addendum (CCPA) with Fortiline, Inc., which allows the City to purchase products from the company through their direct purchasing contract with the City of Phoenix. Change Order No. 1 seeks to increase the not to exceed (NTE) amount of the CCPA from $125,000 to $325,000 to allow the Water Resources Department to continue to purchase critical parts for the remainder of the Fiscal Year.
Staff Liaison: Terry Lowe, Water Resources Director, tlowe@buckeyeaz.gov, (623) 349-6102

***4.K** Council to take action on the Agreement for Water Service for the Algodon Development between the City of Buckeye, Ashton Woods Arizona, L.L.C., Starlight Homes Arizona L.L.C., and CW - Algodon, LLC.
Summary: The agreement will agree to pay the City water impact and water service fees to receive water services instead of amounts in prior water service agreements.
Staff Liaison: Terry Lowe, Director, Water Resources Director, tlowe@buckeyeaz.gov, (623) 349-6102

***4.L** Council to take action on the Cooperative Contract Purchase Addendum (CCPA) (Contract No. 2025250) between the City of Buckeye, an Arizona municipal corporation, and Motorola Solutions, Inc., a Delaware corporation, related to CIP No.100980 Tartesso Communications Tower (also known as Tartesso Buckeye Tower (TART)); and authorize the City Manager to execute the CCPA on behalf of the City.
Summary: This contract with Motorola Solutions, Inc. is provided under the Arizona State Contract #CTR046830. This new ASTRO nine (9) channel IP simulcast site will provide wireless communication coverage for the sub-site known as Tartesso Buckeye Tower (TART), in the total amount to be paid under this CCPA shall not exceed $1,116,946.91.
Staff Liaison: James Zwerg, CIP Project Manager, jzwerg@buckeyeaz.gov, (602) 558-2076

***4.M** Council to take action on the Intergovernmental Agreement (IGA) between the City of Buckeye, an Arizona municipal corporation, and Buckeye Water Conservation and Drainage District, an irrigation and water conservation district, for a bridge crossing and concomitant easement for public roadway and utilities, in connection with Capital Improvement Project (CIP) No. 105660 Rooks Road Bridge Project at BID, in an amount not to exceed $3,523,418.58; and authorize the City Manager to finalize the IGA in substantially the form and format presented, and to execute and deliver the same; and to authorize and direct the Mayor, City Manager, City Attorney, and City Clerk to take all steps necessary to carry out the purpose and intent of the IGA.
Summary: The Construction of Rooks Road from MC85 North to Baseline Road requires the coordination, design, and construction of the BWCDD canal bridge. In addition, the scope requires Lateral 24 relocation, Roosevelt Irrigation District Lateral 18 relocation, APS 69KV overhead power lines relocation, and APS/PV effluent distribution pipe reinforcement. The cost from BWCDD to perform this scope of work is $3,523,418.58 and will grant an easement for public roadway and utilities over the canal bridge.

Staff Liaison: James Zwerg, CIP Project Manager, jzwerg@buckeyeaz.gov, (602) 558-2076

***4.N** Council to take action on the Purchase and Sale Agreement (With Escrow Instructions), between the City of Buckeye, an Arizona municipal corporation, and Grace Chapel at Glen Eden Gardens, an Arizona nonprofit corporation, in substantially the form and substance as on file with the City Clerk, for the purchase of necessary right of way, consisting of approximately 2.49 acres, to improve Durango from Miller Road to Yuma Road; and to authorize the City Manager to execute and deliver, on behalf of the City, the Purchase Sale Agreement and all documents related to an escrow transaction for the acquisition of such real property.

Summary: Purchase and Sale Agreement (PSA) will allow the city to acquire the necessary property rights required for the roadway construction related to CIP No. 100630 Roadway Intersection Improvements: Durango Street, Miller Road to Yuma Road. The property rights acquired through the PSA are necessary for the construction and implementation of future improvements for the roadway intersection.

Staff Liaison: Rodrigo Nemi, Interim CIP Project Manager, rnemi@buckeyeaz.gov, (623) 204-8442

***4.O** Council to take action on Change Order No. 2 to the Professional Services Agreement between the City of Buckeye, an Arizona municipal corporation, and LJA Engineering, Inc., a Texas corporation, by adding additional services in the amount of up to $258,400 for a total amount not to exceed $900,400 for services related to the development and implementation of the City of Buckeye Capital Improvement Plan (CIP); and authorize the City Manager to execute and deliver said Change Order on behalf of the City.

Summary: The CIP has been challenged with meeting its goals to deliver projects on time and within budget. Changes to the current way that projects are conceptualized and delivered are needed. The existing Professional Services Agreement between the City of Buckeye and LJA Engineering, Inc. to assess the status of the CIP program and recommend needed action for the City of Buckeye to implement in the amount of $192,000 was approved earlier this year. Since that time, unexpected circumstances, including a reduction of available staff in the CIP team, have generated the need to expand LJA Engineering's scope of the Agreement to include management, development, and implementation of the CIP projects with an additional cost of $490,000 for a total contract price not to exceed $642,000. We are currently requesting an additional change order to allow for the final implementation of the program for a total not to exceed $258,400. Bringing the total cost for the program up to $900,400.

Staff Liaison: Javier Setovich, Deputy City Manager, jsetovich@buckeyeaz.gov, (623) 349-6997

***4.P** Council to take action to approve the Cooperative Contract Purchase Addendum, Contract No. 2025217 with Safeware, Inc. between the City of Buckeye, an Arizona municipal corporation, and Safeware, Inc., a Maryland corporation; and authorizing the City Manager to execute and deliver said Cooperative Contract Purchase Addendum (CCPA) on behalf of the City of Buckeye.

Summary: The City of Buckeye has received a grant award in the amount of $350,000 to purchase a new armored rescue police vehicle, which will be purchased through the Cooperative Contract Purchase Addendum, Contract No. 2025217 with Safeware, Inc.

Staff Liaison: Rob Roach, Grant Program Manager, rroach@buckeyeaz.gov, (623) 349-6165

***4.Q** Council to approve Resolution No. 79-24 for the designation of the applicant's Authorized Representative and Alternate Authorized Representative forms submission to the Arizona Department of Emergency and Military Affairs, which designates the City's representatives for

applying for certain public assistance; and authorizing the Applicant's Authorized Representatives to execute and deliver said application on behalf of the City of Buckeye.
Summary: This action will provide the Arizona Department of Emergency and Military Affairs with the Authorized and Alternate Authorized Representatives, allowing them to execute and deliver documentation on behalf of the City of Buckeye to receive awarded financial assistance for COVID-19-related expenses incurred in prior years. The City Manager is designated as the Authorized Representative, and the Grant Program Manager is designated as the Alternate Authorized Representative.
Staff Liaison: Rob Roach, Grant Program Manager, rroach@buckeyeaz.gov, (623) 349-6165

***4.R** Council to approve the submission of a $96,000 Museums for America Grant application through the Institute of Museum and Library Services for the restoration, preservation, and display of the City of Buckeye's Magistrate Book Number 1 and the original founders' bond documents. The project also includes the digitization of the restored documents, the purchase of a tamper-evident archival display case, and educational materials and exhibits.
Summary: This grant application submission is for the restoration, preservation, digitization, and public display of foundational City of Buckeye documents, such as the Magistrate Book Number 1 and original bond documents, and the purchase of a tamper-evident archival display case and educational materials and exhibits to foster a deeper connection to Buckeye's history. Additionally, digital images of the documents will also be available for use in local libraries and museums.
Staff Liaison: Rob Roach, Grant Program Manager, rroach@buckeyeaz.gov, (623) 349-6165

***4.S** Council to take action on the approval, acceptance, and execution of Grant Award Number 15PBJA-24-GG-04436-BWCX, from the US Department of Justice, Office of Justice, Bureau of Justice Assistance Fiscal Year 24 Body-Worn Camera Policy and Implementation Program to Support Law Enforcement Agencies, in the amount of $200,000, to support the replacement and expansion of 200 new Body-Worn Cameras (BWCs) over a 36-month period, 200 Auto-Transcribe service licenses for 36 months, and 200 Redaction Assistant licenses for 36 months; to authorize the City Manager to execute and deliver the Grant Award; and to authorize the Mayor, City Manager, City Attorney, and City Clerk to take all steps necessary to carry out the purpose and intent of the Grant Award.
Summary: The 2024 Body-Worn Camera Policy and Implementation Program award is for the Buckeye Police Department to obtain new body-worn cameras to upgrade and replace current body-worn cameras as they are nearing the end of their useful life and are not equipped to meet today's needs. The new body-worn cameras awarded through this grant are equipped with state-of-the-art technology to meet today's needs and improved battery capacity to increase reliability. The grant also supports an Auto-Transcribe Service, which will aid in officers' report writing to save time and increase accuracy. Lastly, the grant award supports the Redaction Assistant Service to aid in body-worn camera footage redaction to improve accuracy and timeliness in providing requested footage. The grant covers a three-year period (36 months).
Staff Liaison: Rob Roach, Grant Program Manager, rroach@buckeyeaz.gov, (623) 349-6165

***4.T** Council to take action on Contract No. 2025222 for City-wide Custodial Services between the City of Buckeye, an Arizona municipal corporation (the "City"), and CCS Facility Services – Arizona Inc. a Delaware corporation (the "Contractor"), for custodial services throughout all city facilities in the City of Buckeye.
Summary: CCS Facility Services provides custodial services for all City facilities and City park

restroom buildings, excluding firehouses. In addition to the routine cleaning service, the contractor provides quarterly carpet and window cleaning based on the needs of each facility, from weekly to daily service.
Staff Liaison: Bret Hodne, Public Works Director, bhodne@buckeyeaz.gov (623) 349-6800

***4.U** Council to take action on Resolution No. 81-24 approving the Transit Services Amendment between the City of Buckeye and the Regional Public Transportation Authority dba Valley Metro (Contract #109-75-2025-04-00), for the changes to the fixed route bus service costs; and authorizing the City Manager to execute and deliver said Contract and related documents on behalf of the City of Buckeye.
Summary: Regional Public Transportation Authority (RPTA) will continue its partnership with the City of Buckeye by continuing bus routes 563 and 685 from July 1, 2024 through June 30, 2025.
Staff Liaison: John Willett, Acting Director of Engineering, jwillett@buckeyeaz.gov, (623) 349-6282

***4.V** Council to take action to approve the Federal Aviation Administration Contract Tower Program Application and Memorandum of Understanding (MOU); and to authorize the City Manager to execute and deliver said application and MOU on behalf of the City of Buckeye.
Summary: Airport operations (takeoffs and landings) at Buckeye Municipal Airport have grown from approximately 50,000 to 115,000 in the past three years. As a result, Staff is recommending the City enter the Federal Aviation Administration (FAA) Contract Tower (FCT) Program. The FCT provides an opportunity for the cost of staffing an Air Traffic Control Tower (ATCT) to be fully funded by the FAA.
Staff Liaison: Scott Gray, Aviation Director, sgray@buckeyeaz.gov, (623) 349-6885

***4.W** Council to take action approving Change Order No. 1 to the Cooperative Contract Purchase Addendum (CCPA) (No. 2024144) between the City of Buckeye and Matlick Enterprises Inc., DBA United Fire Equipment Company for firefighting equipment; and authorize the City Manager to execute and deliver said Change Order on behalf of the City.
Summary: The Fire Department is requesting approval of Change Order No. 1 to Cooperative Contract Purchase Addendum (CCPA) No. 2024144 to increase the Not to Exceed amount from $500,000 to $900,000 due to rising inflation and the purchase of equipment for new and replacement apparatus. Council is not approving any purchase; only approving the maximum dollar amount that can be spent through the contract's life. By doing so at this time, the Fire Department will not need to return to Council and the contract will be in place to allow for Purchase Orders to be issued as soon as funds are available to expedite the purchase process and allow apparatus to be placed in-service as soon as possible.
Staff Liaison: Jake Rhoades, Fire Chief, jrhoades@buckeyeaz.gov, (623) 349-6700

***4.X** Council to take action on Change Order No. 2 to the Cooperative Contract Purchase Addendum (CCPA) (No. 2024145) between the City of Buckeye and Motorola Solutions, Inc. for public communications equipment and services; and authorize the City Manager to execute and deliver said Change Order on behalf of the City.
Summary: The Fire Department is requesting approval of Change Order No. 2 to Cooperative Contract Purchase Addendum (CCPA) No. 2024145 with Motorola Solutions, Inc. Except for increasing the Not to Exceed amount from $540,000 to $840,000, all original terms and conditions of CCPA No. 2024145 remain the same. This increase will allow for budgeted purchases for FY-25 and equipment for new and replacement apparatus. Council is not

approving any purchase; only approving the maximum dollar amount that can be spent through the contract's life. By doing so at this time, the Fire Department will not need to return to Council and the contract will be in place to allow for Purchase Orders to be issued as soon as funds are available to expedite the purchase process and allow apparatus to be placed in-service as soon as possible.
Staff Liaison: Jake Rhoades, Fire Chief, jrhoades@buckeyeaz.gov, (623) 349-6700

***4.Y** Council to take action on Change Order No. 1 to the Cooperative Contract Purchase Addendum (CCPA) (No. 2025155) between the City of Buckeye and Municipal Emergency Services, Inc. for Self-Contained Breathing Apparatus; and authorize the City Manager to execute and deliver said Change Order on behalf of the City.
Summary: The Fire Department is requesting approval of Change Order No. 1 to Cooperative Purchase Contract Addendum (CCPA) No. 2025155 for the purpose of increasing the Not to Exceed amount from $225,000 to $325,000 due to rising inflation and the purchase of Self-Contained Breathing Apparatus (SCBA) for new and replacement apparatus. The Public Works Fleet Division may also use this contract for equipment on fire apparatus that falls under their budget. Council is not approving any purchase; only approving the maximum dollar amount that can be spent through the life of the contract. By doing so at this time, the Fire Department will not need to return to Council and the contract will be in place to allow for Purchase Orders to be issued as soon as funds are available to expedite the purchase process and allow apparatus to be placed in-service as soon as possible.
Staff Liaison: Jake Rhoades, Fire Chief, jrhoades@buckeyeaz.gov, (623) 349-6700

***4.Z** Council to take action on Change Order No. 1 to the Cooperative Contract Purchase Addendum (CCPA) (No. 2025160) between the City of Buckeye and Municipal Emergency Services, Inc. for Personal Protective Equipment; and authorize the City Manager to execute and deliver said Change Order on behalf of the City.
Summary: The Fire Department is requesting approval of Change Order No. 1 to Cooperative Purchase Contract Addendum (CCPA) No. 2025160 for the purpose of increasing the Not to Exceed amount from $225,000 to $575,000 due to rising inflation and additional staff required to wear Personal Protective Equipment in the course of their duties. Council is not approving any purchase; only approving the maximum dollar amount that can be spent through the life of the contract. By doing so at this time, the Fire Department will not need to return to Council and the contract will be in place to allow for Purchase Orders to be issued as soon as funds are available to expedite the purchase process and allow apparatus to be placed in-service as soon as possible.
Staff Liaison: Jake Rhoades, Fire Chief, jrhoades@buckeyeaz.gov, (623) 349-6700

***4.AA** Council to take action on the Cooperative Contract Purchase Addendum (CCPA) (No. 2025252) between the City of Buckeye and Stryker Sales, LLC. for EMS equipment and maintenance services and authorize the City Manager to execute and deliver said CCPA on behalf of the city.
Summary: The Fire Department is requesting approval of Cooperative Contract Purchase Addendum (CCPA) No. 2025252 to purchase EMS supplies, maintenance services, and equipment, including cardiac monitors for new and replacement apparatus. Cost Not to Exceed $400,000. The council will only approve the maximum dollar amount that can be spent throughout the contract. By doing so at this time, the Fire Department will not need to return to Council in this fiscal year as the contract will be in place to allow for Purchase Orders to be issued as soon as funds are available to expedite the purchase process and allow apparatus to be placed in-service

as soon as possible.
Staff Liaison: Jake Rhoades, Fire Chief, jrhoades@buckeyeaz.gov, (623) 349-6700

***4.AB** Council to take action on Change Order No. 1 to the Cooperative Contract Purchase Addendum (CCPA) (No. 2025158) between the City of Buckeye and Municipal Emergency Services, Inc. for firefighting equipment; and authorize the City Manager to execute and deliver said Change Order on behalf of the City.

Summary: The Fire Department is requesting approval of Change Order No. 1 to Cooperative Purchase Contract Addendum (CCPA) No. 2025158 to increase the Not to Exceed amount from $225,000 to $725,000 due to rising inflation and the purchase of firefighting equipment for new and replacement apparatus. The Public Works Fleet Division may also use this contract for equipment on fire apparatus that falls under their budget. Council is not approving any purchase, only approving the maximum dollar amount that can be spent through the contract's life. By doing so at this time, the Fire Department will not need to return to Council. The contract will be in place to allow for Purchase Orders to be issued as soon as funds are available to expedite the purchase process and allow apparatus to be placed in-service as soon as possible.
Staff Liaison: Jake Rhoades, Fire Chief, jrhoades@buckeyeaz.gov, (623) 349-6700

***4.AC** Council to take action on Change Order No. 1 to the Cooperative Contract Purchase Addendum (CCPA) No. 2025225 between the City of Buckeye and Sea-Western, Inc. for fire fighting equipment; and authorize the City Manager to execute and deliver said Change Order on behalf of the City.

Summary: The Fire Department is requesting approval of Change Order No. 1 to CCPA No. 2025225 to increase the Not to Exceed amount from $225,000 to $800,000 due to rising inflation and the purchase of equipment for new and replacement apparatus. Council is not approving any purchase, only approving the maximum dollar amount that can be spent through the contract's life. By doing so now, the Fire Department will not need to return to Council. The contract will be in place to allow for Purchase Orders to be issued as soon as funds are available to expedite the purchase process and allow apparatus to be placed in service as soon as possible.
Staff Liaison: Jake Rhoades, Fire Chief, jrhoades@buckeyeaz.gov, (623) 349-6700

***4.AD** Council to take action to grant the Franchise Agreement between Southwest Gas Corporation, a California corporation, and the City of Buckeye, Arizona, in the form filed and published; to authorize the Mayor to execute and deliver the Franchise Agreement; and to authorize and direct the Mayor, City Manager, City Attorney, and City Clerk to take all steps necessary to carry out the purpose and intent of said Franchise Agreement.

Summary: On February 20, 2024, Council adopted Resolution No. 01-24 ordering and calling a Primary Election to be held on July 30, 2024, which included the submission to the voters a question as to whether or not a Franchise shall be granted to Southwest Gas Corporation. At the July 30, 2024 Primary Election, a majority of qualified voters approved Proposition 481 related to the Southwest Gas Franchise Agreement (Agreement) with the City. The Agreement grants Southwest Gas Corporation the authority to serve customers within the municipality and to utilize the City's public right-of-way for gas utility purposes. Staff now recommends Council grant the Agreement in the form filed and published, which ensures Buckeye consistently has access to reliable energy sources, including affordable and clean natural gas. The term of the Agreement is 25 years, with an effective date of October 4, 2025, and an expiration date of October 4, 2050. The Agreement has been approved and signed by Southwest Gas Corporation.
Staff Liaison: K. Scott McCoy, City Attorney, smccoy@buckeyeaz.gov, (623) 349-6982

5. Continued / Tabled Public Hearings

No action will be taken on the items listed in this section. Details of the continuance are reflected in the item descriptions.

6. Public Hearings and Non-Consent - New Business Items

6.A Council to hold a public hearing and take action on Ordinance No. 27-24 amending the Zoning Map of the City of Buckeye for approximately .07 acres located approximately at the southeast corner of Baseline Road and East 3rd Avenue from Special Use (SU) to Downtown Residential (DR).

Summary: The applicant is requesting approval of a rezone of approximately .07 acres located approximately at the southeast corner of Baseline Road and East 3rd Avenue. The applicant is requesting to rezone the property from Special Use (SU) to Downtown Residential (DR) to allow for the development of the property with a residential duplex in accordance with the vision of the Historic Downtown Buckeye Activity Center and Downtown Buckeye Specific Area Plan.

Staff Liaison: Jarek Dunn, Planner I, jdunn@buckeyeaz.gov, (623) 204-3002

6.B Council to hold a public hearing and take action on Ordinance No. 30-24 declaring as a public record that certain document on file with the City Clerk entitled the "City of Buckeye December 2024 Development Code Article 8 Update;" adopting the same by reference; amending Chapter 7, Development Code, Article 8, Review and Approval Procedures, as set forth in the "City of Buckeye December 2024 Development Code Article 8 Update;" providing for repeal of conflicting ordinances and provisions; and providing for severability.

Summary: The City of Buckeye Development Services Department is requesting approval of amendments to Development Code Article 8 in order to comply with the requirements of Arizona State Legislature Senate Bill 1162, signed on April 23, 2024, by the Governor of Arizona. The legislation requires municipalities to adopt an amendment to their zoning ordinances, adding language addressing the administrative completeness of residential rezoning applications. Cities are required to comply with the statute by amending their respective codes by no later than January 1, 2025.

Staff Liaison: Mandy Woods, Senior Planner, swoods@buckeyeaz.gov, (623) 640-6093

6.C Council to hold a public hearing and take action on Ordinance No. 29-24, amending the zoning map of the City of Buckeye for approximately 17.89 acres of land located approximately 1000 feet east of the northeast corner of north Verrado Way and west Fillmore Street, from Commercial Center (CC) to Multi-Family 2 (MF-2).

Summary: The applicant is requesting approval of a rezone of 17.89 acres located 1,000 feet east of the northeast corner of Verrado Way and Fillmore Street from Commercial Center (CC) to Multi-Family 2 (MF-2) to facilitate development of a multi-family residential community.

Staff Liaison: Mandy Woods, Senior Planner, swoods@buckeyeaz.gov, (623) 640-6093

7. Comments from the Mayor and Council

Mayor and Council may present a brief summary of current events and/or report on any of the Boards and Commissions and other organizations as necessary. The Council may not propose, discuss, deliberate, or take any legal action on information presented. Council may direct inquiries to staff.

8. City Manager's Report and Summary of Current Events

9. Proposals for Future Agenda Items

The Mayor or three Council Members may propose items for inclusion in a future agenda. Council shall not discuss the merit or substance of any proposed item: discussion and action shall be limited to whether or not the item shall be included in a future agenda.

10. Adjournment

CITY OF BUCKEYE
Regular Council Meeting
COUNCIL ACTION REPORT

MEETING DATE: 12/17/24	**AGENDA ITEM:** 4.A. PD - Initiate AXON Contract - 5 Year
DATE PREPARED: 12/17/24	**DISTRICT NO.:**
STAFF LIAISON: Robert Sanders, Chief of Police, rsanders@buckeyeaz.gov, (623) 349-6430	
DEPARTMENT: Police	**AGENDA ITEM TYPE:** Consent Agenda Items / New Business

ACTION/MOTION: (This language identifies the formal motion to be made by the Council)
Council to take action on a 5-year contract between the City of Buckeye and AXON Enterprise, Inc., relating to the purchase of new tasers along with enhanced training applications; and authorizing the City Manager to execute the agreement.

SUMMARY

PROJECT DESCRIPTION:
The Police Department is initiating a contract for new Conductive Energy Weapons (Tasers). Currently, the department utilizes the Taser 7 as a less lethal weapon, but would like to purchase the Taser 10, to ensure greater safety for sworn personnel. The current cost of the contract reflects a total of 160 tasers with add-ons for newly hired personnel will be at the prevailing package rate for future amendments for a total of 60 months at the cost of $778,864.34.

BENEFITS:
Initiating the contract now with AXON will lock in the cost of the contract until we add on more Tasers. If there is a price increase later in FY2025, we will be locked into the calendar year 2024 pricing, which based upon previous years, has been a 10-15% increase yearly in cost. Over the life of the contract, we predict a minimum savings of $10,000-$15,000 by initiating this contract now.

FUTURE ACTION:
No future action is required at this time.

FINANCIAL IMPACT STATEMENT:
Total contract cost for 60 months is $778,864.34. Annually, the cost will be $155,792.22.

CURRENT FISCAL YEAR TOTAL COST:
Currently, AXON is paid $435,000 annually for Taser, Body Cameras, and additional software.

BUDGETED:
Yes

FISCAL YEAR:
2025

Items related to a project or facility location must include an attached vicinity map for Council Review.
ATTACHMENTS:
contract No. 2025256.pdf

COOPERATIVE CONTRACT PURCHASE ADDENDUM (CCPA)
BETWEEN THE CITY OF BUCKEYE
AND
AXON ENTERPRISE INC

CONDUCTED ENERGY WEAPONS
CONTRACT NO. 2025256

THIS COOPERATIVE CONTRACT PURCHASE ADDENDUM (this "Addendum") is entered into as of_____, between the City of Buckeye, an Arizona municipal corporation (the "City"), and Axon Enterprise Inc., an Arizona corporation (the "Contractor").

WHEREAS, after a competitive procurement process, which is documented in the Award attached hereto as **Exhibit A** and incorporated herein by reference, Sourcewell Contract entered into Contract No. 092722-AXN, dated February 3, 2023 with the Contractor (such contract and subsequent amendments thereto here referred to as the "Sourcewell Contract"), which is attached hereto as **Exhibit A** and incorporated herein by reference; and

WHEREAS, the City is permitted by Section 24-3-16 of the City Procurement Code to make purchases via cooperative purchasing pursuant to a cooperative purchasing contract; and

WHEREAS, the Contractor has made a proposal to the City, which is attached hereto as **Exhibit B** and incorporated herein by reference (the "Contract"); and

WHEREAS, the City desires to accept the Proposal and enter into contract with the Contractor under the terms and conditions of the Sourcewell Contract, by issuing this Addendum to said contract.

THEREFORE, the City now enters into this Addendum with Contractor for the goods and services set forth in the Proposal. This Addendum incorporates the terms and conditions of the Sourcewell Contract, except to the extent superseded herein. All references in the Sourcewell Contract shall be read to refer to the City of Buckeye. This Addendum shall be effective as of the date set forth below for approval and remain in effect for the remainder of the Sourcewell Contract 092722-AXN, unless such term is modified or extended pursuant to the terms of the Sourcewell Contract. Payments to the Contractor shall be calculated in accordance with the Fee Schedule, which is attached hereto as part of **Exhibit B**, in a total amount not to exceed $778,864.34.

FURTHER, this Addendum is subject to cancellation pursuant to ARS §38-511.

FURTHER, to the extent applicable, the Contractor and its subcontractors warrant compliance with all federal immigration laws and regulations that relate to their employees and their compliance with the E-verify requirements under A.R.S. § 23-214(A). The Contractor's or its subcontractors' failure to comply with such warranty shall be deemed a material breach of this Addendum and may result in the termination of this Addendum by the City. The City retains the right to inspect the papers of the Contractor's or its subcontractors' employees who perform any work or services pursuant to this Addendum to ensure compliance with these warranties.

FURTHER, to the extent applicable, the Contractor warrants that it is not participating and will not participate in prohibited activity in contravention of A.R.S. § 35-393.01.

FURTHER, to the extent applicable under ARIZ. REV. STAT. § 35-394, Contractor certifies that it does not currently, and agrees for the duration of this Agreement that it will not use (i) the forced labor of ethnic Uyghurs in the Peoples Republic of China ("ethnic Uyghurs"), (ii) any goods or services produced by the forced labor of ethnic Uyghurs, or (iii) any Contractors, subcontractors, or suppliers that use the forced labor or any goods or services produced by the forced labor of ethnic Uyghurs. If Contractor becomes aware that it is not in compliance with this paragraph, Contractor shall notify the City of the noncompliance within five (5) business days of becoming aware of it. If Contractor fails to provide a written certification that Contractor has remedied the noncompliance within one hundred eighty (180) days after that, this Agreement shall terminate unless the termination date of this Agreement occurs before the end of the remedy period, in which case this Agreement terminates on the Agreement termination date.

FURTHER, the Parties agree that the Addendum and Exhibits thereto shall be governed by State of Arizona law and suits pertaining to the Addendum and Exhibits thereto may only be brought in courts located in Maricopa County, Arizona.

FURTHER, all modifications, including but not limited to service additions and deletions, will be made in writing and with the written agreement of both parties.

FURTHER, in the event of any inconsistency between this Addendum, Sourcewell Contract and **Exhibit B**, the documents shall govern in that order.

CLICKWRAP TERMS EXCLUDED, in the event the Consultant's terms of sale or service were provided to the City only upon "acceptance" of a "clickwrap" or "clickthrough" agreement, such terms of sale or service shall not be binding upon the City. No oral agreement, "clickwrap" or "clickthrough" agreement or other understanding shall in any way modify a City issued or approved contract or the terms of this Cooperative Contract Purchase Addendum (CCPA).

THEREFORE, the Parties have executed this Addendum as of the date first set forth above.

CITY

THE CITY OF BUCKEYE,
an Arizona Municipal corporation

_____
Dan Cotterman, City Manager

CONTRACTOR

AXON ENTERPRISE INC.,
an Arizona corporation

By: Robert E. Driscoll, Jr.

Title: Deputy General Counsel

ATTEST:

Lucinda Aja, City Clerk

RECOMMENDED:

William Kauppi

William Kauppi, Chief Financial Officer

APPROVED AS TO FORM:

K. Scott McCoy, City Attorney

EXHIBIT A
TO
COOPERATIVE CONTRACT PURCHASE ADDENDUM
CONTRACT NO. 2025256

[Sourcewell Contract]

See following page(s).

DocuSign Envelope ID: D42555B2-A9C0-4012-B8AB-477EFF75B838

Sourcewell

Solicitation Number: 092722

CONTRACT

This Contract is between Sourcewell, 202 12th Street Northeast, P.O. Box 219, Staples, MN 56479 (Sourcewell) and Axon Enterprise, Inc., 17800 N. 85th St., Scottsdale, AZ 85255-6311 (Supplier).

Sourcewell is a State of Minnesota local government unit and service cooperative created under the laws of the State of Minnesota (Minnesota Statutes Section 123A.21) that offers cooperative procurement solutions to government entities. Participation is open to eligible federal, state/province, and municipal governmental entities, higher education, K-12 education, nonprofit, tribal government, and other public entities located in the United States and Canada. Sourcewell issued a public solicitation for Conducted Energy Weapons from which Supplier was awarded a contract.

Supplier desires to contract with Sourcewell to provide equipment, products, or services to Sourcewell and the entities that access Sourcewell's cooperative purchasing contracts (Participating Entities).

1. TERM OF CONTRACT

A. EFFECTIVE DATE. This Contract is effective upon the date of the final signature below.

B. EXPIRATION DATE AND EXTENSION. This Contract expires November 21, 2026, unless it is cancelled sooner pursuant to Article 22. This Contract may be extended one additional year upon the request of Sourcewell and written agreement by Supplier.

C. SURVIVAL OF TERMS. Notwithstanding any expiration or termination of this Contract, all payment obligations incurred prior to expiration or termination will survive, as will the following: Articles 11 through 14 survive the expiration or cancellation of this Contract. All other rights will cease upon expiration or termination of this Contract.

2. EQUIPMENT, PRODUCTS, OR SERVICES

A. EQUIPMENT, PRODUCTS, OR SERVICES. Supplier will provide the Equipment, Products, or Services as stated in its Proposal submitted under the Solicitation Number listed above.

DocuSign Envelope ID: D42555B2-A9C0-4012-B8AB-477EFF75B838

Supplier's Equipment, Products, or Services Proposal (Proposal) is attached and incorporated into this Contract.

All Equipment and Products provided under this Contract must be new and the current model. Supplier may offer close-out or refurbished Equipment or Products if they are clearly indicated in Supplier's product and pricing list. Unless agreed to by the Participating Entities in advance, Equipment or Products must be delivered as operational to the Participating Entity's site.

This Contract offers an indefinite quantity of sales, and while substantial volume is anticipated, sales and sales volume are not guaranteed.

B. WARRANTY. Supplier warrants that all Equipment, Products, and Services furnished are free from liens and encumbrances, and are free from defects in design, materials, and workmanship. In addition, Supplier warrants the Equipment, Products, and Services will perform in accordance with the manufacturer's specification. Supplier's dealers and distributors must agree to assist the Participating Entity in reaching a resolution in any dispute over warranty terms with the manufacturer. Any manufacturer's warranty that extends beyond the expiration of the Supplier's warranty will be passed on to the Participating Entity.

C. DEALERS, DISTRIBUTORS, AND/OR RESELLERS. Upon Contract execution and throughout the Contract term, Supplier must provide to Sourcewell a current means to validate or authenticate Supplier's authorized dealers, distributors, or resellers relative to the Equipment, Products, and Services offered under this Contract, which will be incorporated into this Contract by reference. It is the Supplier's responsibility to ensure Sourcewell receives the most current information.

3. PRICING

All Equipment, Products, or Services under this Contract will be priced at or below the price stated in Supplier's Proposal.

When providing pricing quotes to Participating Entities, all pricing quoted must reflect a Participating Entity's total cost of acquisition. This means that the quoted cost is for delivered Equipment, Products, and Services that are operational for their intended purpose, and includes all costs to the Participating Entity's requested delivery location.

Regardless of the payment method chosen by the Participating Entity, the total cost associated with any purchase option of the Equipment, Products, or Services must always be disclosed in the pricing quote to the applicable Participating Entity at the time of purchase.

A. SHIPPING AND SHIPPING COSTS. All delivered Equipment and Products must be properly packaged. Damaged Equipment and Products may be rejected. If the damage is not readily apparent at the time of delivery, Supplier must permit the Equipment and Products to be

DocuSign Envelope ID: D42555B2-A9C0-4012-B8AB-477EFF75B838

returned within a reasonable time at no cost to Sourcewell or its Participating Entities. Participating Entities reserve the right to inspect the Equipment and Products at a reasonable time after delivery where circumstances or conditions prevent effective inspection of the Equipment and Products at the time of delivery. In the event of the delivery of nonconforming Equipment and Products, the Participating Entity will notify the Supplier as soon as possible and the Supplier will replace nonconforming Equipment and Products with conforming Equipment and Products that are acceptable to the Participating Entity.

Supplier must arrange for and pay for the return shipment on Equipment and Products that arrive in a defective or inoperable condition.

Sourcewell may declare the Supplier in breach of this Contract if the Supplier intentionally delivers substandard or inferior Equipment or Products.

B. SALES TAX. Each Participating Entity is responsible for supplying the Supplier with valid tax-exemption certification(s). When ordering, a Participating Entity must indicate if it is a tax-exempt entity.

C. HOT LIST PRICING. At any time during this Contract, Supplier may offer a specific selection of Equipment, Products, or Services at discounts greater than those listed in the Contract. When Supplier determines it will offer Hot List Pricing, it must be submitted electronically to Sourcewell in a line-item format. Equipment, Products, or Services may be added or removed from the Hot List at any time through a Sourcewell Price and Product Change Form as defined in Article 4 below.

Hot List program and pricing may also be used to discount and liquidate close-out and discontinued Equipment and Products as long as those close-out and discontinued items are clearly identified as such. Current ordering process and administrative fees apply. Hot List Pricing must be published and made available to all Participating Entities.

4. PRODUCT AND PRICING CHANGE REQUESTS

Supplier may request Equipment, Product, or Service changes, additions, or deletions at any time. All requests must be made in writing by submitting a signed Sourcewell Price and Product Change Request Form to the assigned Sourcewell Supplier Development Administrator. This approved form is available from the assigned Sourcewell Supplier Development Administrator. At a minimum, the request must:

- Identify the applicable Sourcewell contract number;
- Clearly specify the requested change;
- Provide sufficient detail to justify the requested change;

DocuSign Envelope ID: D42555B2-A9C0-4012-B8AB-477EFF75B838

- Individually list all Equipment, Products, or Services affected by the requested change, along with the requested change (e.g., addition, deletion, price change); and
- Include a complete restatement of pricing documentation in Microsoft Excel with the effective date of the modified pricing, or product addition or deletion. The new pricing restatement must include all Equipment, Products, and Services offered, even for those items where pricing remains unchanged.

A fully executed Sourcewell Price and Product Change Request Form will become an amendment to this Contract and will be incorporated by reference.

5. PARTICIPATION, CONTRACT ACCESS, AND PARTICIPATING ENTITY REQUIREMENTS

A. PARTICIPATION. Sourcewell's cooperative contracts are available and open to public and nonprofit entities across the United States and Canada; such as federal, state/province, municipal, K-12 and higher education, tribal government, and other public entities.

The benefits of this Contract should be available to all Participating Entities that can legally access the Equipment, Products, or Services under this Contract. A Participating Entity's authority to access this Contract is determined through its cooperative purchasing, interlocal, or joint powers laws. Any entity accessing benefits of this Contract will be considered a Service Member of Sourcewell during such time of access. Supplier understands that a Participating Entity's use of this Contract is at the Participating Entity's sole convenience and Participating Entities reserve the right to obtain like Equipment, Products, or Services from any other source.

Supplier is responsible for familiarizing its sales and service forces with Sourcewell contract use eligibility requirements and documentation and will encourage potential participating entities to join Sourcewell. Sourcewell reserves the right to add and remove Participating Entities to its roster during the term of this Contract.

B. PUBLIC FACILITIES. Supplier's employees may be required to perform work at government-owned facilities, including schools. Supplier's employees and agents must conduct themselves in a professional manner while on the premises, and in accordance with Participating Entity policies and procedures, and all applicable laws.

6. PARTICIPATING ENTITY USE AND PURCHASING

A. ORDERS AND PAYMENT. To access the contracted Equipment, Products, or Services under this Contract, a Participating Entity must clearly indicate to Supplier that it intends to access this Contract; however, order flow and procedure will be developed jointly between Sourcewell and Supplier. Typically, a Participating Entity will issue an order directly to Supplier or its authorized subsidiary, distributor, dealer, or reseller. If a Participating Entity issues a purchase order, it may use its own forms, but the purchase order should clearly note the applicable Sourcewell

DocuSign Envelope ID: D42555B2-A9C0-4012-B8AB-477EFF75B838

contract number. All Participating Entity orders under this Contract must be issued prior to expiration or cancellation of this Contract; however, Supplier performance, Participating Entity payment obligations, and any applicable warranty periods or other Supplier or Participating Entity obligations may extend beyond the term of this Contract.

Supplier's acceptable forms of payment are included in its attached Proposal. Participating Entities will be solely responsible for payment and Sourcewell will have no liability for any unpaid invoice of any Participating Entity.

B. ADDITIONAL TERMS AND CONDITIONS/PARTICIPATING ADDENDUM. Additional terms and conditions to a purchase order, or other required transaction documentation, may be negotiated between a Participating Entity and Supplier, such as job or industry-specific requirements, legal requirements (e.g., affirmative action or immigration status requirements), or specific local policy requirements. Some Participating Entities may require the use of a Participating Addendum, the terms of which will be negotiated directly between the Participating Entity and the Supplier or its authorized dealers, distributors, or resellers, as applicable. Supplier may require the use of its then-current Master Services and Purchasing Agreement (or similar standard terms and conditions document), a copy of which may be found at https://www.axon.com/sales-terms-and-conditions. Any negotiated additional terms and conditions must never be less favorable to the Participating Entity than what is contained in this Contract.

C. SPECIALIZED SERVICE REQUIREMENTS. In the event that the Participating Entity requires service or specialized performance requirements not addressed in this Contract (such as e-commerce specifications, specialized delivery requirements, or other specifications and requirements), the Participating Entity and the Supplier may enter into a separate, standalone agreement, apart from this Contract. Sourcewell, including its agents and employees, will not be made a party to a claim for breach of such agreement.

D. TERMINATION OF ORDERS. Participating Entities may terminate an order, in whole or in part, immediately upon notice to Supplier in the event of any of the following events:

1. The Participating Entity fails to receive funding or appropriation from its governing body at levels sufficient to pay for the equipment, products, or services to be purchased; or
2. Federal, state, or provincial laws or regulations prohibit the purchase or change the Participating Entity's requirements.

E. GOVERNING LAW AND VENUE. The governing law and venue for any action related to a Participating Entity's order will be determined by the Participating Entity making the purchase.

DocuSign Envelope ID: D42555B2-A9C0-4012-B8AB-477EFF75B838

7. CUSTOMER SERVICE

A. PRIMARY ACCOUNT REPRESENTATIVE. Supplier will assign an Account Representative to Sourcewell for this Contract and must provide prompt notice to Sourcewell if that person is changed. The Account Representative will be responsible for:

- Maintenance and management of this Contract;
- Timely response to all Sourcewell and Participating Entity inquiries; and
- Business reviews to Sourcewell and Participating Entities, if applicable.

B. BUSINESS REVIEWS. Supplier must perform a minimum of one business review with Sourcewell per contract year. The business review will cover sales to Participating Entities, pricing and contract terms, administrative fees, sales data reports, performance issues, supply issues, customer issues, and any other necessary information.

8. REPORT ON CONTRACT SALES ACTIVITY AND ADMINISTRATIVE FEE PAYMENT

A. CONTRACT SALES ACTIVITY REPORT. Each calendar quarter, Supplier must provide a contract sales activity report (Report) to the Sourcewell Supplier Development Administrator assigned to this Contract. Reports are due no later than 45 days after the end of each calendar quarter. A Report must be provided regardless of the number or amount of sales during that quarter (i.e., if there are no sales, Supplier must submit a report indicating no sales were made).

The Report must contain the following fields:

- Participating Entity Name (e.g., City of Staples Highway Department);
- Participating Entity Physical Street Address;
- Participating Entity City;
- Participating Entity State/Province;
- Participating Entity Zip/Postal Code;
- Participating Entity Contact Name;
- Participating Entity Contact Email Address;
- Participating Entity Contact Telephone Number;
- Sourcewell Assigned Entity/Participating Entity Number;
- Item Purchased Description;
- Item Purchased Price;
- Sourcewell Administrative Fee Applied; and
- Date Purchase was invoiced/sale was recognized as revenue by Supplier.

B. ADMINISTRATIVE FEE. In consideration for the support and services provided by Sourcewell, the Supplier will pay an administrative fee to Sourcewell on all Equipment, Products, and

DocuSign Envelope ID: D42555B2-A9C0-4012-B8AB-477EFF75B838

Services provided to Participating Entities. The Administrative Fee must be included in, and not added to, the pricing. Supplier may not charge Participating Entities more than the contracted price to offset the Administrative Fee.

The Supplier will submit payment to Sourcewell for the percentage of administrative fee stated in the Proposal multiplied by the total sales of all Equipment, Products, and Services purchased by Participating Entities under this Contract during each calendar quarter. Payments should note the Supplier's name and Sourcewell-assigned contract number in the memo; and must be mailed to the address above "Attn: Accounts Receivable" or remitted electronically to Sourcewell's banking institution per Sourcewell's Finance department instructions. Payments must be received no later than 45 calendar days after the end of each calendar quarter.

Supplier agrees to cooperate with Sourcewell in auditing transactions under this Contract to ensure that the administrative fee is paid on all items purchased under this Contract.

In the event the Supplier is delinquent in any undisputed administrative fees, Sourcewell reserves the right to cancel this Contract and reject any proposal submitted by the Supplier in any subsequent solicitation. In the event this Contract is cancelled by either party prior to the Contract's expiration date, the administrative fee payment will be due no more than 30 days from the cancellation date.

9. AUTHORIZED REPRESENTATIVE

Sourcewell's Authorized Representative is its Chief Procurement Officer.

Supplier's Authorized Representative is the person named in the Supplier's Proposal. If Supplier's Authorized Representative changes at any time during this Contract, Supplier must promptly notify Sourcewell in writing.

10. AUDIT, ASSIGNMENT, AMENDMENTS, WAIVER, AND CONTRACT COMPLETE

A. AUDIT. Pursuant to Minnesota Statutes Section 16C.05, subdivision 5, the books, records, documents, and accounting procedures and practices relevant to this Contract are subject to examination by Sourcewell or the Minnesota State Auditor for a minimum of six years from the end of this Contract. This clause extends to Participating Entities as it relates to business conducted by that Participating Entity under this Contract.

B. ASSIGNMENT. Neither party may assign or otherwise transfer its rights or obligations under this Contract without the prior written consent of the other party and a fully executed assignment agreement. Such consent will not be unreasonably withheld. Any prohibited assignment will be invalid.

DocuSign Envelope ID: D42555B2-A9C0-4012-B8AB-477EFF75B838

C. AMENDMENTS. Any amendment to this Contract must be in writing and will not be effective until it has been duly executed by the parties.

D. WAIVER. Failure by either party to take action or assert any right under this Contract will not be deemed a waiver of such right in the event of the continuation or repetition of the circumstances giving rise to such right. Any such waiver must be in writing and signed by the parties.

E. CONTRACT COMPLETE. This Contract represents the complete agreement between the parties. No other understanding regarding this Contract, whether written or oral, may be used to bind either party. For any conflict between the attached Proposal and the terms set out in Articles 1-22 of this Contract, the terms of Articles 1-22 will govern.

F. RELATIONSHIP OF THE PARTIES. The relationship of the parties is one of independent contractors, each free to exercise judgment and discretion with regard to the conduct of their respective businesses. This Contract does not create a partnership, joint venture, or any other relationship such as master-servant, or principal-agent.

11. INDEMNITY AND HOLD HARMLESS

A. Supplier must indemnify, defend, save, and hold Sourcewell, including their agents and employees, harmless from any claims or causes of action, including attorneys' fees incurred by Sourcewell, arising out of any negligent or willfully wrongful act or omission in the performance of this Contract by the Supplier or its agents or employees; this indemnification includes injury or death to person(s) or property alleged to have been caused by some defect in the Equipment, Products, or Services under this Contract to the extent the Equipment, Product, or Service has been used according to its specifications. In no event will Supplier be liable for any special, indirect, incidental, exemplary, or consequential damages, however caused, whether for breach of warranty, breach of contract, negligence, strict liability, tort or other legal theory. Sourcewell's responsibility will be governed by the State of Minnesota's Tort Liability Act (Minnesota Statutes Chapter 466) and other applicable law.

B. Notwithstanding Section 6 (B) of this Agreement, Supplier and Participating Entities may negotiate mutually agreeable indemnity, hold harmless, and limitations of liability to be incorporated into purchase or subsequent agreements utilizing the terms of this Sourcewell Contract.

12. GOVERNMENT DATA PRACTICES

Supplier and Sourcewell must comply with the Minnesota Government Data Practices Act, Minnesota Statutes Chapter 13, as it applies to all data provided by or provided to Sourcewell

DocuSign Envelope ID: D42555B2-A9C0-4012-B8AB-477EFF75B838

under this Contract and as it applies to all data created, collected, received, maintained, or disseminated by the Supplier under this Contract.

13. INTELLECTUAL PROPERTY, PUBLICITY, MARKETING, AND ENDORSEMENT

A. INTELLECTUAL PROPERTY

1. *Grant of License.* During the term of this Contract:

   a. Sourcewell grants to Supplier a royalty-free, worldwide, non-exclusive right and license to use the trademark(s) provided to Supplier by Sourcewell in advertising and promotional materials for the purpose of marketing Sourcewell's relationship with Supplier.

   b. Supplier grants to Sourcewell a royalty-free, worldwide, non-exclusive right and license to use Supplier's trademarks in advertising and promotional materials for the purpose of marketing Supplier's relationship with Sourcewell.

2. *Limited Right of Sublicense*. The right and license granted herein includes a limited right of each party to grant sublicenses to their respective subsidiaries, distributors, dealers, resellers, marketing representatives, and agents (collectively "Permitted Sublicensees") in advertising and promotional materials for the purpose of marketing the Parties' relationship to Participating Entities. Any sublicense granted will be subject to the terms and conditions of this Article. Each party will be responsible for any breach of this Article by any of their respective sublicensees.

3. *Use; Quality Control.*

   a. Neither party may alter the other party's trademarks from the form provided and must comply with removal requests as to specific uses of its trademarks or logos.

   b. Each party agrees to use, and to cause its Permitted Sublicensees to use, the other party's trademarks only in good faith and in a dignified manner consistent with such party's use of the trademarks. Upon written notice to the breaching party, the breaching party has 30 days of the date of the written notice to cure the breach or the license will be terminated.

4. *Termination*. Upon the termination of this Contract for any reason, each party, including Permitted Sublicensees, will have 30 days to remove all Trademarks from signage, websites, and the like bearing the other party's name or logo (excepting Sourcewell's pre-printed catalog of suppliers which may be used until the next printing). Supplier must return all marketing and promotional materials, including signage, provided by Sourcewell, or dispose of it according to Sourcewell's written directions.

B. PUBLICITY. Any publicity regarding the subject matter of this Contract must not be released without prior written approval from the Authorized Representatives. Publicity includes notices, informational pamphlets, press releases, research, reports, signs, and similar public notices prepared by or for the Supplier individually or jointly with others, or any subcontractors, with respect to the program, publications, or services provided resulting from this Contract.

DocuSign Envelope ID: D42555B2-A9C0-4012-B8AB-477EFF75B838

C. MARKETING. Any direct advertising, marketing, or offers with Participating Entities must be approved by Sourcewell. Send all approval requests to the Sourcewell Supplier Development Administrator assigned to this Contract.

D. ENDORSEMENT. The Supplier must not claim that Sourcewell endorses its Equipment, Products, or Services.

14. GOVERNING LAW, JURISDICTION, AND VENUE

The substantive and procedural laws of the State of Minnesota will govern this Contract. Venue for all legal proceedings arising out of this Contract, or its breach, must be in the appropriate state court in Todd County, Minnesota or federal court in Fergus Falls, Minnesota.

15. FORCE MAJEURE

Neither party to this Contract will be held responsible for delay or default caused by acts of God or other conditions that are beyond that party's reasonable control. A party defaulting under this provision must provide the other party prompt written notice of the default.

16. SEVERABILITY

If any provision of this Contract is found by a court of competent jurisdiction to be illegal, unenforceable, or void then both parties will be relieved from all obligations arising from that provision. If the remainder of this Contract is capable of being performed, it will not be affected by such determination or finding and must be fully performed.

17. PERFORMANCE, DEFAULT, AND REMEDIES

A. PERFORMANCE. During the term of this Contract, the parties will monitor performance and address unresolved contract issues as follows:

1. *Notification.* The parties must promptly notify each other of any known dispute and work in good faith to resolve such dispute within a reasonable period of time. If necessary, Sourcewell and the Supplier will jointly develop a short briefing document that describes the issue(s), relevant impact, and positions of both parties.
2. *Escalation.* If parties are unable to resolve the issue in a timely manner, as specified above, either Sourcewell or Supplier may escalate the resolution of the issue to a higher level of management. The Supplier will have 30 calendar days to cure an outstanding issue.
3. *Performance while Dispute is Pending*. Notwithstanding the existence of a dispute, the Supplier must continue without delay to carry out all of its responsibilities under the Contract that are not affected by the dispute. If the Supplier fails to continue without delay to perform its responsibilities under the Contract, in the accomplishment of all undisputed

DocuSign Envelope ID: D42555B2-A9C0-4012-B8AB-477EFF75B838

work, the Supplier will bear any additional costs incurred by Sourcewell and/or its Participating Entities as a result of such failure to proceed.

B. DEFAULT AND REMEDIES. Either of the following constitutes cause to declare this Contract, or any Participating Entity order under this Contract, in default:

1. Nonperformance of contractual requirements, or
2. A material breach of any term or condition of this Contract.

The party claiming default must provide written notice of the default, with 30 calendar days to cure the default. Time allowed for cure will not diminish or eliminate any liability for liquidated or other damages. If the default remains after the opportunity for cure, the non-defaulting party may:

- Exercise any remedy provided by law or equity, or
- Terminate the Contract or any portion thereof, including any orders issued against the Contract.

18. INSURANCE

A. REQUIREMENTS. At its own expense, Supplier must maintain insurance policy(ies) in effect at all times during the performance of this Contract with insurance company(ies) licensed or authorized to do business in the State of Minnesota having an "AM BEST" rating of A- or better, with coverage and limits of insurance not less than the following:

1. *Workers' Compensation and Employer's Liability.*
Workers' Compensation: As required by any applicable law or regulation.
Employer's Liability Insurance: must be provided in amounts not less than listed below:
Minimum limits:
$500,000 each accident for bodily injury by accident
$500,000 policy limit for bodily injury by disease
$500,000 each employee for bodily injury by disease

2. *Commercial General Liability Insurance.* Supplier will maintain insurance covering its operations, with coverage on an occurrence basis, and must be subject to terms no less broad than the Insurance Services Office ("ISO") Commercial General Liability Form CG0001 (2001 or newer edition), or equivalent. At a minimum, coverage must include liability arising from premises, operations, bodily injury and property damage, independent contractors, products-completed operations including construction defect, contractual liability, blanket contractual liability, and personal injury and advertising injury. All required limits, terms and conditions of coverage must be maintained during the term of this Contract.
Minimum Limits:

DocuSign Envelope ID: D42555B2-A9C0-4012-B8AB-477EFF75B838

$1,000,000 each occurrence Bodily Injury and Property Damage
$1,000,000 Personal and Advertising Injury
$2,000,000 aggregate for products liability-completed operations
$2,000,000 general aggregate

3. *Commercial Automobile Liability Insurance.* During the term of this Contract, Supplier will maintain insurance covering all owned, hired, and non-owned automobiles in limits of liability not less than indicated below. The coverage must be subject to terms no less broad than ISO Business Auto Coverage Form CA 0001 (2010 edition or newer), or equivalent.

Minimum Limits:
$1,000,000 each accident, combined single limit

4. *Umbrella Insurance*. During the term of this Contract, Supplier will maintain umbrella coverage over Employer's Liability, Commercial General Liability, and Commercial Automobile.

Minimum Limits:
$2,000,000

5. *Network Security and Privacy Liability Insurance*. During the term of this Contract, Supplier will maintain coverage for network security and privacy liability. The coverage may be endorsed on another form of liability coverage or written on a standalone policy. The insurance must cover claims which may arise from failure of Supplier's security resulting in, but not limited to, computer attacks, unauthorized access, disclosure of not public data – including but not limited to, confidential or private information, transmission of a computer virus, or denial of service.

Minimum limits:
$2,000,000 per occurrence
$2,000,000 annual aggregate

Failure of Supplier to maintain the required insurance will constitute a material breach entitling Sourcewell to immediately terminate this Contract for default.

B. CERTIFICATES OF INSURANCE. Prior to commencing under this Contract, Supplier must furnish to Sourcewell a certificate of insurance, as evidence of the insurance required under this Contract. Prior to expiration of the policy(ies), renewal certificates must be mailed to Sourcewell, 202 12th Street Northeast, P.O. Box 219, Staples, MN 56479 or sent to the Sourcewell Supplier Development Administrator assigned to this Contract. The certificates must be signed by a person authorized by the insurer(s) to bind coverage on their behalf.

Failure to request certificates of insurance by Sourcewell, or failure of Supplier to provide certificates of insurance, in no way limits or relieves Supplier of its duties and responsibilities in this Contract.

DocuSign Envelope ID: D42555B2-A9C0-4012-B8AB-477EFF75B838

C. ADDITIONAL INSURED ENDORSEMENT AND PRIMARY AND NON-CONTRIBUTORY INSURANCE CLAUSE. Supplier agrees to list Sourcewell and its Participating Entities, including their officers, agents, and employees, as an additional insured under the Supplier's commercial general liability insurance policy with respect to liability arising out of activities, "operations," or "work" performed by or on behalf of Supplier, and products and completed operations of Supplier. The policy provision(s) or endorsement(s) must further provide that coverage is primary and not excess over or contributory with any other valid, applicable, and collectible insurance or self-insurance in force for the additional insureds.

D. WAIVER OF SUBROGATION. Supplier waives and must require (by endorsement or otherwise) all its insurers to waive subrogation rights against Sourcewell and other additional insureds for losses paid under the insurance policies required by this Contract or other insurance applicable to the Supplier or its subcontractors. The waiver must apply to all deductibles and/or self-insured retentions applicable to the required or any other insurance maintained by the Supplier or its subcontractors. Where permitted by law, Supplier must require similar written express waivers of subrogation and insurance clauses from each of its subcontractors.

E. UMBRELLA/EXCESS LIABILITY/SELF-INSURED RETENTION. The limits required by this Contract can be met by either providing a primary policy or in combination with umbrella/excess liability policy(ies), or self-insured retention.

19. COMPLIANCE

A. LAWS AND REGULATIONS. All Equipment, Products, or Services provided under this Contract must comply fully with applicable federal laws and regulations, and with the laws in the states and provinces in which the Equipment, Products, or Services are sold.

B. LICENSES. Supplier must maintain a valid and current status on all required federal, state/provincial, and local licenses, bonds, and permits required for the operation of the business that the Supplier conducts with Sourcewell and Participating Entities.

20. BANKRUPTCY, DEBARMENT, OR SUSPENSION CERTIFICATION

Supplier certifies and warrants that it is not in bankruptcy or that it has previously disclosed in writing certain information to Sourcewell related to bankruptcy actions. If at any time during this Contract Supplier declares bankruptcy, Supplier must immediately notify Sourcewell in writing.

Supplier certifies and warrants that neither it nor its principals are presently debarred, suspended, proposed for debarment, declared ineligible, or voluntarily excluded from programs operated by the State of Minnesota; the United States federal government or the Canadian

DocuSign Envelope ID: D42555B2-A9C0-4012-B8AB-477EFF75B838

government, as applicable; or any Participating Entity. Supplier certifies and warrants that neither it nor its principals have been convicted of a criminal offense related to the subject matter of this Contract. Supplier further warrants that it will provide immediate written notice to Sourcewell if this certification changes at any time.

21. PROVISIONS FOR NON-UNITED STATES FEDERAL ENTITY PROCUREMENTS UNDER UNITED STATES FEDERAL AWARDS OR OTHER AWARDS

Participating Entities that use United States federal grant or FEMA funds to purchase goods or services from this Contract may be subject to additional requirements including the procurement standards of the Uniform Administrative Requirements, Cost Principles and Audit Requirements for Federal Awards, 2 C.F.R. § 200. Participating Entities may have additional requirements based on specific funding source terms or conditions. Within this Article, all references to "federal" should be interpreted to mean the United States federal government. The following list only applies when a Participating Entity accesses Supplier's Equipment, Products, or Services with United States federal funds.

A. EQUAL EMPLOYMENT OPPORTUNITY. Except as otherwise provided under 41 C.F.R. § 60, all contracts that meet the definition of "federally assisted construction contract" in 41 C.F.R. § 60-1.3 must include the equal opportunity clause provided under 41 C.F.R. §60-1.4(b), in accordance with Executive Order 11246, "Equal Employment Opportunity" (30 FR 12319, 12935, 3 C.F.R. §, 1964-1965 Comp., p. 339), as amended by Executive Order 11375, "Amending Executive Order 11246 Relating to Equal Employment Opportunity," and implementing regulations at 41 C.F.R. § 60, "Office of Federal Contract Compliance Programs, Equal Employment Opportunity, Department of Labor." The equal opportunity clause is incorporated herein by reference.

B. DAVIS-BACON ACT, AS AMENDED (40 U.S.C. § 3141-3148). When required by federal program legislation, all prime construction contracts in excess of $2,000 awarded by non-federal entities must include a provision for compliance with the Davis-Bacon Act (40 U.S.C. § 3141-3144, and 3146-3148) as supplemented by Department of Labor regulations (29 C.F.R. § 5, "Labor Standards Provisions Applicable to Contracts Covering Federally Financed and Assisted Construction"). In accordance with the statute, contractors must be required to pay wages to laborers and mechanics at a rate not less than the prevailing wages specified in a wage determination made by the Secretary of Labor. In addition, contractors must be required to pay wages not less than once a week. The non-federal entity must place a copy of the current prevailing wage determination issued by the Department of Labor in each solicitation. The decision to award a contract or subcontract must be conditioned upon the acceptance of the wage determination. The non-federal entity must report all suspected or reported violations to the federal awarding agency. The contracts must also include a provision for compliance with the Copeland "Anti-Kickback" Act (40 U.S.C. § 3145), as supplemented by Department of Labor regulations (29 C.F.R. § 3, "Contractors and Subcontractors on Public Building or Public Work Financed in Whole or in Part by Loans or Grants from the United States"). The Act provides that

DocuSign Envelope ID: D42555B2-A9C0-4012-B8AB-477EFF75B838

each contractor or subrecipient must be prohibited from inducing, by any means, any person employed in the construction, completion, or repair of public work, to give up any part of the compensation to which he or she is otherwise entitled. The non-federal entity must report all suspected or reported violations to the federal awarding agency. Supplier must be in compliance with all applicable Davis-Bacon Act provisions.

C. CONTRACT WORK HOURS AND SAFETY STANDARDS ACT (40 U.S.C. § 3701-3708). Where applicable, all contracts awarded by the non-federal entity in excess of $100,000 that involve the employment of mechanics or laborers must include a provision for compliance with 40 U.S.C. §§ 3702 and 3704, as supplemented by Department of Labor regulations (29 C.F.R. § 5). Under 40 U.S.C. § 3702 of the Act, each contractor must be required to compute the wages of every mechanic and laborer on the basis of a standard work week of 40 hours. Work in excess of the standard work week is permissible provided that the worker is compensated at a rate of not less than one and a half times the basic rate of pay for all hours worked in excess of 40 hours in the work week. The requirements of 40 U.S.C. § 3704 are applicable to construction work and provide that no laborer or mechanic must be required to work in surroundings or under working conditions which are unsanitary, hazardous or dangerous. These requirements do not apply to the purchases of supplies or materials or articles ordinarily available on the open market, or contracts for transportation or transmission of intelligence. This provision is hereby incorporated by reference into this Contract. Supplier certifies that during the term of an award for all contracts by Sourcewell resulting from this procurement process, Supplier must comply with applicable requirements as referenced above.

D. RIGHTS TO INVENTIONS MADE UNDER A CONTRACT OR AGREEMENT. If the federal award meets the definition of "funding agreement" under 37 C.F.R. § 401.2(a) and the recipient or subrecipient wishes to enter into a contract with a small business firm or nonprofit organization regarding the substitution of parties, assignment or performance of experimental, developmental, or research work under that "funding agreement," the recipient or subrecipient must comply with the requirements of 37 C.F.R. § 401, "Rights to Inventions Made by Nonprofit Organizations and Small Business Firms Under Government Grants, Contracts and Cooperative Agreements," and any implementing regulations issued by the awarding agency. Supplier certifies that during the term of an award for all contracts by Sourcewell resulting from this procurement process, Supplier must comply with applicable requirements as referenced above.

E. CLEAN AIR ACT (42 U.S.C. § 7401-7671Q.) AND THE FEDERAL WATER POLLUTION CONTROL ACT (33 U.S.C. § 1251-1387). Contracts and subgrants of amounts in excess of $150,000 require the non-federal award to agree to comply with all applicable standards, orders or regulations issued pursuant to the Clean Air Act (42 U.S.C. § 7401- 7671q) and the Federal Water Pollution Control Act as amended (33 U.S.C. § 1251- 1387). Violations must be reported to the Federal awarding agency and the Regional Office of the Environmental Protection Agency (EPA). Supplier certifies that during the term of this Contract will comply with applicable requirements as referenced above.

DocuSign Envelope ID: D42555B2-A9C0-4012-B8AB-477EFF75B838

F. DEBARMENT AND SUSPENSION (EXECUTIVE ORDERS 12549 AND 12689). A contract award (see 2 C.F.R. § 180.220) must not be made to parties listed on the government wide exclusions in the System for Award Management (SAM), in accordance with the OMB guidelines at 2 C.F.R. §180 that implement Executive Orders 12549 (3 C.F.R. § 1986 Comp., p. 189) and 12689 (3 C.F.R. § 1989 Comp., p. 235), "Debarment and Suspension." SAM Exclusions contains the names of parties debarred, suspended, or otherwise excluded by agencies, as well as parties declared ineligible under statutory or regulatory authority other than Executive Order 12549. Supplier certifies that neither it nor its principals are presently debarred, suspended, proposed for debarment, declared ineligible, or voluntarily excluded from participation by any federal department or agency.

G. BYRD ANTI-LOBBYING AMENDMENT, AS AMENDED (31 U.S.C. § 1352). Suppliers must file any required certifications. Suppliers must not have used federal appropriated funds to pay any person or organization for influencing or attempting to influence an officer or employee of any agency, a member of Congress, officer or employee of Congress, or an employee of a member of Congress in connection with obtaining any federal contract, grant, or any other award covered by 31 U.S.C. § 1352. Suppliers must disclose any lobbying with non-federal funds that takes place in connection with obtaining any federal award. Such disclosures are forwarded from tier to tier up to the non-federal award. Suppliers must file all certifications and disclosures required by, and otherwise comply with, the Byrd Anti-Lobbying Amendment (31 U.S.C. § 1352).

H. RECORD RETENTION REQUIREMENTS. To the extent applicable, Supplier must comply with the record retention requirements detailed in 2 C.F.R. § 200.333. The Supplier further certifies that it will retain all records as required by 2 C.F.R. § 200.333 for a period of 3 years after grantees or subgrantees submit final expenditure reports or quarterly or annual financial reports, as applicable, and all other pending matters are closed.

I. ENERGY POLICY AND CONSERVATION ACT COMPLIANCE. To the extent applicable, Supplier must comply with the mandatory standards and policies relating to energy efficiency which are contained in the state energy conservation plan issued in compliance with the Energy Policy and Conservation Act.

J. BUY AMERICAN PROVISIONS COMPLIANCE. To the extent applicable, Supplier must comply with all applicable provisions of the Buy American Act. Purchases made in accordance with the Buy American Act must follow the applicable procurement rules calling for free and open competition.

K. ACCESS TO RECORDS (2 C.F.R. § 200.336). Supplier agrees that duly authorized representatives of a federal agency must have access to any books, documents, papers and records of Supplier that are directly pertinent to Supplier's discharge of its obligations under this Contract for the purpose of making audits, examinations, excerpts, and transcriptions. The

DocuSign Envelope ID: D42555B2-A9C0-4012-B8AB-477EFF75B838

right also includes timely and reasonable access to Supplier's personnel for the purpose of interview and discussion relating to such documents.

L. PROCUREMENT OF RECOVERED MATERIALS (2 C.F.R. § 200.322). A non-federal entity that is a state agency or agency of a political subdivision of a state and its contractors must comply with Section 6002 of the Solid Waste Disposal Act, as amended by the Resource Conservation and Recovery Act. The requirements of Section 6002 include procuring only items designated in guidelines of the Environmental Protection Agency (EPA) at 40 C.F.R. § 247 that contain the highest percentage of recovered materials practicable, consistent with maintaining a satisfactory level of competition, where the purchase price of the item exceeds $10,000 or the value of the quantity acquired during the preceding fiscal year exceeded $10,000; procuring solid waste management services in a manner that maximizes energy and resource recovery; and establishing an affirmative procurement program for procurement of recovered materials identified in the EPA guidelines.

M. FEDERAL SEAL(S), LOGOS, AND FLAGS. The Supplier cannot use the seal(s), logos, crests, or reproductions of flags or likenesses of Federal agency officials without specific pre-approval.

N. NO OBLIGATION BY FEDERAL GOVERNMENT. The U.S. federal government is not a party to this Contract or any purchase by a Participating Entity and is not subject to any obligations or liabilities to the Participating Entity, Supplier, or any other party pertaining to any matter resulting from the Contract or any purchase by an authorized user.

O. PROGRAM FRAUD AND FALSE OR FRAUDULENT STATEMENTS OR RELATED ACTS. The Contractor acknowledges that 31 U.S.C. 38 (Administrative Remedies for False Claims and Statements) applies to the Supplier's actions pertaining to this Contract or any purchase by a Participating Entity.

P. FEDERAL DEBT. The Supplier certifies that it is non-delinquent in its repayment of any federal debt. Examples of relevant debt include delinquent payroll and other taxes, audit disallowance, and benefit overpayments.

Q. CONFLICTS OF INTEREST. The Supplier must notify the U.S. Office of General Services, Sourcewell, and Participating Entity as soon as possible if this Contract or any aspect related to the anticipated work under this Contract raises an actual or potential conflict of interest (as described in 2 C.F.R. Part 200). The Supplier must explain the actual or potential conflict in writing in sufficient detail so that the U.S. Office of General Services, Sourcewell, and Participating Entity are able to assess the actual or potential conflict; and provide any additional information as necessary or requested.

R. U.S. EXECUTIVE ORDER 13224. The Supplier, and its subcontractors, must comply with U.S. Executive Order 13224 and U.S. Laws that prohibit transactions with and provision of resources and support to individuals and organizations associated with terrorism.

DocuSign Envelope ID: D42555B2-A9C0-4012-B8AB-477EFF75B838

S. PROHIBITION ON CERTAIN TELECOMMUNICATIONS AND VIDEO SURVEILLANCE SERVICES OR EQUIPMENT. To the extent applicable, Supplier certifies that during the term of this Contract it will comply with applicable requirements of 2 C.F.R. § 200.216.

T. DOMESTIC PREFERENCES FOR PROCUREMENTS. To the extent applicable, Supplier certifies that during the term of this Contract will comply with applicable requirements of 2 C.F.R. § 200.322.

22. CANCELLATION

Sourcewell or Supplier may cancel this Contract at any time, with or without cause, upon 60 days' written notice to the other party. However, Sourcewell may cancel this Contract immediately upon discovery of a material defect in any certification made in Supplier's Proposal. Cancellation of this Contract does not relieve either party of financial, product, or service obligations incurred or accrued prior to cancellation.

Sourcewell	Axon Enterprise, Inc.
DocuSigned by: Jeremy Schwartz C0FD2A139D06489...	DocuSigned by: 55DAEBB131A4424...
By: _____	By: _____
Jeremy Schwartz	Robert E. Driscoll Jr.
Title: Chief Procurement Officer	Title: VP Associate General Counsel and Assistant Corporate Secretary
Date: 2/3/2023 | 1:31 PM CST	Date: 2/3/2023 | 3:09 PM MST

Approved:

DocuSigned by: Chad Coauette 7E42B8F817A64CC...

By: _____

Chad Coauette

Title: Executive Director/CEO

Date: 2/3/2023 | 4:33 PM CST

RFP 092722 - Conducted Energy Weapons

Vendor Details

Company Name:	Axon Enterprise, Inc.
Does your company conduct business under any other name? If yes, please state:	AZ
Address:	17800 N. 85th Street Scottsdale, Arizona 85255
Contact:	Sales Ops
Email:	contracts@axon.com
Phone:	480-905-2000
Fax:	480-991-0791
HST#:	86-0741227

Submission Details

Created On:	Thursday September 15, 2022 12:49:27
Submitted On:	Tuesday September 27, 2022 00:45:52
Submitted By:	Sales Ops
Email:	contracts@axon.com
Transaction #:	1e710178-b344-4e2c-8c5c-05ebfbe19988
Submitter's IP Address:	72.216.185.29

Specifications

Table 1: Proposer Identity & Authorized Representatives

General Instructions (applies to all Tables) Sourcewell prefers a brief but thorough response to each question. Do not merely attach additional documents to your response without also providing a substantive response. Do not leave answers blank; respond "N/A" if the question does not apply to you (preferably with an explanation).

Line Item	Question	Response *	
1	Proposer Legal Name (one legal entity only): (In the event of award, will execute the resulting contract as "Supplier")	Axon Enterprise, Inc.	*
2	Identify all subsidiary entities of the Proposer whose equipment, products, or services are included in the Proposal.	Axon Enterprise, Inc. is not a subsidiary of another firm or company; Axon is the direct or indirect parent company of the following entities: • Axon Enterprise Holding Company, LLC, organized in the United States • Vievu, LLC, organized in the United States • Dextro, Inc., organized in the United States • Familiar Inc., organized in the United States • Mediasolv Solutions Corporation, organized in the United States • Axon Public Safety B.V., organized in the Netherlands • TASER Holland B.V., organized in the Netherlands • Axon Public Safety Canada, organized in Canada • Axon Public Safety U.K. Limited, organized in the United Kingdom • Axon Public Safety Australia Pty Ltd., organized in Australia • Axon Public Safety Germany SE, organized in Germany • Axon Public Safety Southeast Asia LLC, organized in Vietnam • Axon Public Safety Finland Oy, organized in Finland • Axon Publicsafety India Private Limited, organized in India • Axon Public Safety Hong Kong Limited, organized in Hong Kong • Axon Enterprise Italia S.r.l., organized in Italy	*
3	Identify all applicable assumed names or DBA names of the Proposer or Proposer's subsidiaries in Line 1 or Line 2 above.	Axon Enterprise, Inc. is also referred to as Axon.	*
4	Provide your CAGE code or Unique Entity Identifier (SAM):	CAGE Code: 1WHR1	*
5	Proposer Physical Address:	17800 N. 85th St, Scottsdale, AZ 85255-6311	*
6	Proposer website address (or addresses):	www.axon.com	*
7	Proposer's Authorized Representative (name, title, address, email address & phone) (The representative must have authority to sign the "Proposer's Assurance of Compliance" on behalf of the Proposer and, in the event of award, will be expected to execute the resulting contract):	Robert E. Driscoll, Jr. VP, Associate General Counsel and Assistant Corporate Secretary 17800 N. 85th St, Scottsdale, AZ 85255-6311 contracts@axon.com 800-978-2737	*
8	Proposer's primary contact for this proposal (name, title, address, email address & phone):	Jane Pearson, Senior Proposal Manager 17800 N. 85th St, Scottsdale, AZ 85255-6311 japearson@axon.com 480-905-2037	*
9	Proposer's other contacts for this proposal, if any (name, title, address, email address & phone):	Ashley Forbrich, Director of Sales – Growth 17800 N. 85th St, Scottsdale, AZ 85255-6311 aforbrich@axon.com 301-356-5253	

Table 2: Company Information and Financial Strength

Line Item	Question	Response *	

10	Provide a brief history of your company, including your company's core values, business philosophy, and industry longevity related to the requested equipment, products or services.	Since 1993, Axon Enterprise, Inc. has been committed to delivering safe, secure solutions for law enforcement, militaries, and citizens. From our humble beginning as TASER International, Inc. to now, we have worked diligently to develop a network of TASER energy weapons, body-worn and in-car cameras, and industry-leading cloud-based evidence management software to help accomplish a singular goal—to protect life. Axon currently partners with more than 15,100 agencies around the world to deliver innovative hardware and software solutions built for the public safety sector. With 11 offices based in Arizona, Washington, North Carolina, Australia, Canada, Finland, Germany, India, the Netherlands, the United Kingdom, and Vietnam, Axon's team of more than 1,800 employees continues to define smarter policing through the development of industry-leading technology solutions. Axon is a market-driven organization dedicated to solving real problems for law enforcement agencies. We create meaningful value through high-quality products, enhanced technology solutions and extraordinary service. We are proud of the values with which we conduct our business. We instill a culture of morality and good ethical conduct in all our business practices. We have and will continue to uphold the highest levels of business ethics and personal integrity in all types of transactions and interactions, both internally and in dealings with our customers, vendor, suppliers and other business relationships. To this end, our Code of Business Conduct and Ethics Code serves to (a) emphasize the Company's commitment to ethics and compliance with the law; (b) set forth basic standards of ethical and legal behavior; (c) provide reporting mechanisms for known or suspected ethical or legal violations; and (d) help prevent and detect wrongdoing. All employees are required to read and sign our Code of Business Conduct and Ethics policy, which is available on our website https://www.axon.com/legal. Additionally, our employees and business practices are guided by our core values, which are: BE OBSESSED: Walk with the customer as you transform their world. We never want to develop or sell something that you don't want or need. We're obsessed with creating products that solve real problems and add value. If it doesn't benefit you, then we rethink what we're doing. AIM FAR: Think big with a long-term view. We want to reinvent the world to be a safer, better place. We've failed spectacularly a few times, but that's what you get when you aim for the stars. That's our final destination. WIN RIGHT: Win with integrity. We are fiercely competitive and have an unquenchable thirst to win, but we don't think winning and doing the right thing are mutually exclusive. Our challenge is to make them synonymous, and never compromise our integrity. OWN IT: Commit, take action, and deliver. We empower individuals to step up and take initiative. Be an owner and see things through to completion. That's the only way we've been able to succeed as a company, and it's the only way we will continue to grow. JOIN FORCES: Act as one global team. Creating the future is a team sport. When a company scales globally in 40 different markets with multiple technology stacks ranging from wearables and cloud to electronic weapons, you need teamwork. We're one global team committed to an audacious vision. EXPECT CANDOR: Deliver with respect and assume positive intent. Candor gets critical issues elevated, puts truth on the table, and gets us to the right answer faster. How can we be the best version of ourselves and the best company we can be, if we can't offer and be given critical feedback?	*
11	What are your company's expectations in the event of an award?	Upon notification that Axon has been awarded, we will work expeditiously to complete contract negotiations with Sourcewell. Due to the nature of contract negotiations, an exact timeframe cannot be provided. Once a contract is in place, Axon will begin marketing efforts to promote the Sourcewell Cooperative. We understand the estimated annual value of all transactions from contracts resulting from this RFP are anticipated to be USD $30 million. We understand that this is a projected value only and is not guaranteed. Overall, we hope to partner with Sourcewell to bring our industry-leading law enforcement solutions to more customers by using your cooperative to make the procurement process easier and more transparent for purchasers.	*

12	Demonstrate your financial strength and stability with meaningful data. This could include such items as financial statements, SEC filings, credit and bond ratings, letters of credit, and detailed reference letters. Upload supporting documents (as applicable) in the document upload section of your response.	Axon is a publicly-traded company; all financial information is available at investor.axon.com. Axon's NASDAQ stock ticker symbol is AXON. NET SALES • Net sales were $863 million and $681 million for the years ended December 31, 2021, and 2020, respectively, an increase of $182 million. • Net sales were $681 million and $530 million for the years ended December 31, 2020, and 2019, respectively, an increase of $151 million. • Net sales were $530 million and $420 million for the years ended December 31, 2019, and 2018, respectively, an increase of $110 million. • Net sales were $420 million and $343 million for the years ended December 31, 2018, and 2017, respectively, an increase of $77 million. • Net sales were $343 million and $268 million for the years ended December 31, 2017, and 2016, respectively, an increase of $75 million. • Net sales were $268 million and $197 million for the years ended December 31, 2016, and 2015, an increase of $71 million. NET INCOME • Our net income decreased by $60.0 million for the year ended December 31, 2021, compared to net income of $1.7 million in 2020. Net loss per basic and diluted share was $0.19 for 2021, compared to net income per basic and diluted share of $0.03 for 2020. • Our net income decreased by $1.7 million for the year ended December 31, 2020, compared to net income of $0.9 million in 2019. Net loss per basic and diluted share was $0.03 for 2020, compared to net income per basic and diluted share of $0.01 for 2019. • Our net income decreased by $28.3 million to $0.9 million for the year ended December 31, 2019, compared to $29.2 million in 2018. Net income per basic and diluted share was $0.01, respectively, for 2019 compared to $0.52 and $0.50 per basic and diluted share for 2018. • Our net income increased by $24.0 million to $29.2 million for the year ended December 31, 2018, compared to $5.2 million in 2017. Net income per basic and diluted share was, respectively, for 2018 compared to $0.10 per basic and diluted share for 2017. • Our net income decreased by $12.1 million to $5.2 million for the year ended December 31, 2017, compared to $17.3 million in 2016. Net income per basic and diluted share was $0.10 for 2017 compared to $0.33 and $0.32 per basic and diluted share, respectively, for 2016. • Our net income decreased by $2.6 million to $17.3 million for the year ended December 31, 2016, compared to $19.9 million in 2015. Net income per basic and diluted share was $0.33 and $0.32 for 2016, respectively, compared to $0.37 and $0.36 per basic and diluted share for 2015. Additionally, we have included our Q2 2022 SEC Quarterly Report and 2021 audited financials in the document upload section. These are the most recently available financial reports as of this submission.	*
13	What is your US market share for the solutions that you are proposing?	As of August 2022, Axon holds an estimated 21% of the US market share for TASER energy weapon products (TASER 7, X2, X26P, etc.). State and local law enforcement, federal, corrections, and enterprise agencies are included in this user market scope.	*
14	What is your Canadian market share for the solutions that you are proposing?	Axon tracks Canadian market share as part of our tracking for the Commonwealth geographic region market share and not individually. As of August 2022, Axon holds an estimated 14% of the Commonwealth market share for TASER energy weapon products (TASER 7, X2, X26P, etc.). State/province and local law enforcement, corrections, and enterprise agencies are included in this user market scope.	*
15	Has your business ever petitioned for bankruptcy protection? If so, explain in detail.	Axon has never petitioned for bankruptcy protection.	*

16	How is your organization best described: is it a manufacturer, a distributor/dealer/reseller, or a service provider? Answer whichever question (either a) or b) just below) best applies to your organization. a) If your company is best described as a distributor/dealer/reseller (or similar entity), provide your written authorization to act as a distributor/dealer/reseller for the manufacturer of the products proposed in this RFP. If applicable, is your dealer network independent or company owned? b) If your company is best described as a manufacturer or service provider, describe your relationship with your sales and service force and with your dealer network in delivering the products and services proposed in this RFP. Are these individuals your employees, or the employees of a third party?	a) N/A b) Axon Is best described as a manufacturer and service provider for the proposed hardware, software, and services. TASER energy weapons are manufactured at our corporate headquarters in Scottsdale, Arizona. Manufacturing staff and sales representatives are employees of Axon. Some sales representatives work from our main office in Scottsdale, AZ. Others work throughout the United States and globally. Regarding services, Axon Professional Service employees support and install the majority of our products. Axon handles technical support and repairs for all of its manufactured products.	*
17	If applicable, provide a detailed explanation outlining the licenses and certifications that are both required to be held, and actually held, by your organization (including third parties and subcontractors that you use) in pursuit of the business contemplated by this RFP.	Agencies may choose to track TASER energy weapon log data within their Axon Evidence system; therefore, we have listed certifications for Axon Evidence below. Axon's compliance demonstrates our commitment to providing a trustworthy platform and offers Sourcewell a way to understand the controls put in place to secure Axon Evidence and the data you store in it. These certifications, compliance measures, and security assurances include: • ISO/IEC 27001:2013 Certified - Information Security Management Standards • ISO/IEC 27017:2015 Certified - Code of Practice for Information Security Controls • ISO/IEC 27018:2019 Certified - Code of Practice for Protecting Personal Data in the Cloud • CJIS Compliant • CALEA Standard 17.5.4 Compliant • HIPAA and HITECH • AICPA SOC 2 Type 2 Reporting (Applicable only to Axon Evidence) • SOC 3 Report • Cloud Security Alliance - CSA STAR Attestation (Level Two) • Cloud Security Alliance - CSA STAR Self-Assessment (Level One) • Accessibility Conformance Report - WCAG 2.0 & VPAT/Section 508 • FedRAMP Joint Authorization Board (JAB) Provisional Authority to Operate (P-ATO) at the Moderate Impact Level (Applicable only to the US Federal Region of Axon Evidence) • The authorization confirms that Axon Evidence has been reviewed and approved by the US Department of Defense and Homeland Security, and the General Services Administration Axon's Compliance website (axon.com/trust/compliance) includes additional information on our security certifications as well as copies of certificates and compliance documentation. Axon also maintains the following quality accreditations. MANUFACTURING • ISO 9001 – Axon is accredited to design, develop, manufacture, distribute, and provide services for public safety solutions including, but not limited to digital video recorders and accessories used in the law enforcement industry. These products and services are manufactured and supported according to ISO standards. INFORMATION SECURITY • ISO 27001 – Axon is aligned with the scope of the ISO 27001 certification; the Information Security Management System that governs all customer data that resides in the Axon Evidence application.	*
18	Provide all "Suspension or Debarment" information that has applied to your organization during the past ten years.	Axon has not been suspended or debarred during the past ten years.	*

Table 3: Industry Recognition & Marketplace Success

Line Item	Question	Response *	

19	Describe any relevant industry awards or recognition that your company has received in the past five years	• Axon was recently awarded Comparably's 2022 awards for Best Sales Teams of 2022, Best Places to Work in Phoenix 2022 and Best Company Outlook 2022. The overall culture score, 98/100 or A+, incorporates employee ratings based on their feedback on the Professional Development, CEO Rating, Manager and more. https://www.comparably.com/companies/axon • In 2021, Axon won for Best Company for Women 2021 and Best Company Culture 2021. Based on 6,069 ratings and 210 participants, employees at Axon are very satisfied with their work experience. • Axon won 3 awards in 2019 and 4 awards in 2018. In 2019, Axon won for Best Company Compensation 2019, Best Engineering Team 2019 and Best Company Outlook 2019. • In 2018, Axon won for Best Company Culture 2018, Best Company Happiness, Best Company Perks & Benefits and Best Company Compensation. Based on 6,069 ratings and 210 participants, employees at Axon are very satisfied with their work experience. The overall culture score, 87/100 or A+, incorporates employee ratings based on their feedback on the Office Culture, eNPS, Diversity and more.	*
20	What percentage of your sales are to the governmental sector in the past three years	Axon has 15,100+ active agencies worldwide, including law enforcement agencies for higher education (universities and school districts). Axon tracks sales data based on a wide array of product and service segments across worldwide geographic regions. Various user markets included in the scope of these regions are state and local law enforcement, federal, corrections, fire & EMS, justice, and enterprise agencies. Therefore, granular governmental sector sales information is not provided, but Axon has listed total net sales figures for the past 3 years below for Sourcewell's review. • Net sales were $863 million and $681 million for the years ended December 31, 2021, and 2020, respectively, an increase of $182 million. • Net sales were $681 million and $530 million for the years ended December 31, 2020, and 2019, respectively, an increase of $151 million. • Net sales were $530 million and $420 million for the years ended December 31, 2019, and 2018, respectively, an increase of $110 million. As of August 2022, Axon holds an estimated 21% of the US market share for TASER energy weapon products (TASER 7, X2, X26P, etc.). State and local law enforcement, federal, corrections, and enterprise agencies are included in this user market scope. Additionally, Axon holds an estimated 14% of the Commonwealth market share for TASER energy weapon products (TASER 7, X2, X26P, etc.). State/province and local law enforcement, corrections, and enterprise agencies are included in this user market scope.	*
21	What percentage of your sales are to the education sector in the past three years	Axon has 15,100+ active agencies worldwide, including law enforcement agencies for higher education (universities and school districts). Axon tracks sales data based on a wide array of product and service segments across worldwide geographic regions. Various user markets included in the scope of these regions are state and local law enforcement, federal, corrections, fire & EMS, justice, and enterprise agencies. Therefore, granular education sector sales information is not provided, but Axon has listed total net sales figures for the past 3 years below for Sourcewell's review. • Net sales were $863 million and $681 million for the years ended December 31, 2021, and 2020, respectively, an increase of $182 million. • Net sales were $681 million and $530 million for the years ended December 31, 2020, and 2019, respectively, an increase of $151 million. • Net sales were $530 million and $420 million for the years ended December 31, 2019, and 2018, respectively, an increase of $110 million. As of August 2022, Axon holds an estimated 21% of the US market share for TASER energy weapon products (TASER 7, X2, X26P, etc.). State and local law enforcement, federal, corrections, and enterprise agencies are included in this user market scope. Additionally, Axon holds an estimated 14% of the Commonwealth market share for TASER energy weapon products (TASER 7, X2, X26P, etc.). State/province and local law enforcement, corrections, and enterprise agencies are included in this user market scope.	*

22	List any state, provincial, or cooperative purchasing contracts that you hold. What is the annual sales volume for each of these contracts over the past three years?	• Sourcewell Contract #010720 AXN: $775M+ • Texas BuyBoard 603-20 (CEW only): $15M+ • City of Charlotte CCPA Contract 2022000665: $25M+ • League of Oregon Cities (fka NPP) Contract No. PS20270: $110M+ • New York State Police Contract No. PA01857: $595K+ • State of Arizona No. BPM002192/CTR049284-1: $10M+ • State of Delaware PA for LOC Contract No. GSS20808-TASERS: $90K+ • State of Kansas Contract No. 42523: $4M+ • State of Michigan Contract No. 071B4300067: $4M+ • State of Minnesota Contract 199111: $1M+ • State of New Jersey T0106/17-FLEET-00738: $95M+ • State of Oregon CEW Contract No. 8913: $400K+ • State of Pennsylvania Contract No. 4400019257: $18M+ • Washington State DES Contract No. 04220 for CEW: $960K+ Please note that since most Axon sales are for a five-year term, the above dollar amounts represent the approximate overall contract values over a five-year period and are not fully indicative of sales over the last 3 years.	*
23	List any GSA contracts or Standing Offers and Supply Arrangements (SOSA) that you hold. What is the annual sales volume for each of these contracts over the past three years?	Axon does not hold any GSA contracts.	*

Table 4: References/Testimonials

Line Item 24. Supply reference information from three customers who are eligible to be Sourcewell participating entities.

Entity Name *	Contact Name *	Phone Number *	
Burbank Police Department, California	Michelle Rodriguez	818-238-3174	*
Gilbert Police Department, Arizona	Noah Baker	480-635-7326	*
Avondale Police Department, Arizona	Lt. Mathew Hintz	623-333-7302	*

Table 5: Top Five Government or Education Customers

Line Item 25. Provide a list of your top five government, education, or non-profit customers (entity name is optional), including entity type, the state or province the entity is located in, scope of the project(s), size of transaction(s), and dollar volumes from the past three years.

Entity Name	Entity Type *	State / Province *	Scope of Work *	Size of Transactions *	Dollar Volume Past Three Years *	
Fort Worth Police Department	Government	Texas - TX	Officer Safety Plan (OSP7+) for 1600+ users, 600 Axon Fleet 3 Advanced, 43 Axon Interview rooms	Approximately $200K - $66M	Approximately $68M+	*
Fort Bend County Sheriff's Office	Government	Texas - TX	483 OSP7+, 152 Unlimited 7+, 424 Axon Fleet 3 Basic + TAP	Approximately $50K – $17M	Approximately $22M+	*
Manatee County Sheriff's Office	Government	Florida - FL	550 OSP7+, 250 TASER 7 Cert, 800 VR Unlimited	Approximately $1M – $3M	Approximately $17M+	*
Travis County Sheriff's Office	Government	Texas - TX	287 Axon Body 3 cameras, 90 Axon Fleet 3 in-car cameras, Axon Evidence, Axon Interview Room	Approximately $100K – $13M	Approximately $15M+	*
Grand Prairie Police Department	Government	Texas - TX	OSP7+ Premium with TASER 7 products, Axon Body 3 cameras, Axon Fleet 3 in-car cameras, Axon Dispatch, Axon Records, and Axon Evidence software for 200+ users	Approximately $19K – $12M	Approximately $14M+	*

Table 6: Ability to Sell and Deliver Service

Describe your company's capability to meet the needs of Sourcewell participating entities across the US and Canada, as applicable.

Your response should address in detail at least the following areas: locations of your network of sales and service providers, the number of workers (full-time equivalents) involved in each sector, whether these workers are your direct employees (or employees of a third party), and any overlap between the sales and service functions.

Line Item	Question	Response *
26	Sales force.	Axon directly employs approximately 100 employees in our Sales organization who are committed to selling and delivering service to Sourcewell entities across the US and Canada. Some sales representatives work from our main office in Scottsdale, AZ, while others work remotely throughout the US, Canada, and our other global locations. The distribution of Axon's sales representatives allows us to provide full service and support coverage for Sourcewell entities. Axon organizes representatives into sales divisions to provide services to agencies based on multiple factors including agency type, agency size (i.e. sworn officer counts), agency geographic location, whether the agency is an existing Axon customer or building a new relationship with Axon, and Axon product types. Our multiple sales divisions help ensure we have qualified Axon employees close to Sourcewell entities to provide you with conducted energy weapon equipment, products, and services; conduct site visits; provide demonstrations; and check on customer satisfaction as needed. HIRING PROCESS We take the hiring process seriously, as Axon Sales Representatives play a pivotal role in knowing business needs and applying technological solutions to solve potential challenges. These representatives must have a "business mindset," that enables them to understand complex challenges and present solutions that might solve these. Axon's hiring process intends to identify candidates who can do this effectively. It's our intention to hire people who also derive great satisfaction in helping others solve challenges through technological adoption, implementation, and advancement. Candidates are first phone screened by highly qualified firms who seek top talent from related industries. They are then screened again by a senior member of the Axon team to vet their personal and professional qualifications. During this time, candidates demonstrate how they have successfully learned about past businesses and helped solve their challenges through complex technological solutions. It is expected that candidates can demonstrate success in doing so throughout multiple years of their professional career. The most successful candidates are then invited to Axon headquarters. Throughout the day, they meet five senior members of the Axon team to validate who they are personally and professionally – personal characteristics, business skill, cultural fit within public safety, organizational fit within Axon. The internal team then debriefs about the candidate's potential fit as a representative of the company, on law enforcement's behalf. If the internal team finds the candidate appropriate in this position, the candidate moves on to preparing and providing a plan for how they are going to work with a number of accounts. This includes an understanding of how they're going to research, engage, understand, and work with each potential agency. They present this to the hiring manager (a Director or Vice President at Axon). If appropriate, candidates move on to the final stage of the review and hiring process. During this final stage, candidates speak directly with the Vice President of the Axon Sales Team or with the Executive Vice President of Global Sales for the organization. During this time, the candidate, once again, reviews their personal and professional qualifications as well as their approach to working within the organization and with public safety agencies. At this time, a decision to extend an offer of employment is made. The multiple steps and many stakeholders in the hiring process are to ensure proper rigor in vetting those who work with the many agencies we have or would like to partner with through a business engagement. Axon is a proud technological partner of many in public safety and looks forward to hiring many more qualified individuals to appropriately work with, understand, and solve challenges within, for, and alongside countless agencies for years to come.
27	Dealer network or other distribution methods.	Axon partners with distributors in limited situations. Within the United States, we work with a small number of distributors to sell our TASER energy weapon products. These distributors are not employees of Axon; therefore, we do not know their company employment numbers. In Canada, we partner exclusively with MD Charlton to sell and service TASER energy weapons. There is some overlap between sales and service functions in this case, as MD Charlton assists Axon with processing repairs.

28	Service force.	As a whole, the Axon Support organization directly employs approximately 100 individuals across our Customer Support and Customer Success divisions, including our Return Material Authorization (RMA) department. Our dedicated customer success and support managers are committed to providing Sourcewell entities with post-sales and post-deployment support. CUSTOMER SUPPORT Axon has a full customer and technical support team available 24 hours a day, seven days a week. The team is based in Scottsdale, Arizona with additional employees in our Melbourne, Australia and Daventry, UK offices. REPAIR (RMA) DEPARTMENT The Return Material Authorization (RMA) department is located at Axon Headquarters in Scottsdale, Arizona. The RMA department prioritizes returned products for analysis and/or repair on a first-in-first-out (FIFO) basis, based on the severity of the complaint (or unless otherwise requested by the agency). The general turn-around time for a full resolution is less than 30 calendar days from receipt of the returned product. Axon provides agencies with the ability to manage RMA requests within Axon Evidence. Authorized users will be able to create, update, save, submit, and track device returns for their agency in one place. Axon Evidence Device Return Service is integrated with FedEx and return shipping labels are provided at no extra charge. RMAs may also be generated at returns.axon.com, although return shipping labels are not available via this method. Upon receipt of the item(s), the RMA department will conduct a failure analysis investigation to determine the root cause of the issue and repair the item if possible. It is at Axon's sole discretion to repair or replace a device as identified in the original manufacturer warranty and/or the extended warranty policy. CUSTOMER SUCCESS MANAGERS (CSM) Throughout the length of their contract, some customers will have a dedicated, in-country Customer Success Manger (CSM). CSM support is available for both the US and Canada and is determined based on the size and location of the customer. The CSM's goal is to support your day-to-day needs, educate you on Axon products, and ensure you are receiving the full value from your investment. The CSM promotes open communication with agency personnel to foster positive and familiar relationships. They provide highly responsive and specialized support and ongoing education to deliver the best possible customer experience. Your CSM will ensure that questions and concerns are addressed with urgency, and that feedback is received with genuine consideration. More specifically, your CSM will: • Serve as a single point of contact to answer day-to-day questions for your agency's administrative team • Keep you updated on Axon developments • Connect you with other Axon teams, such as Technical Support or Professional Services, when necessary • Ensure that you are using best practices within Axon Cloud Services • Communicate your product feedback to appropriate teams within Axon • Facilitate customer "health check" meetings	*
29	Describe the ordering process. If orders will be handled by distributors, dealers or others, explain the respective roles of the Proposer and others.	Axon will accept and process orders from Sourcewell entities directly for the US and Canada. Our Order Entry team enters orders into our CRM, Salesforce. Reports will be maintained and extracted from Salesforce for quarterly reporting to Sourcewell.	*

30	Describe in detail the process and procedure of your customer service program, if applicable. Include your response-time capabilities and commitments, as well as any incentives that help your providers meet your stated service goals or promises.	Axon is committed to providing Sourcewell entities with timely responses to requests for support. During system implementation, the assigned Axon project implementation team will be available via phone and email to provide customer support during normal business hours. Additionally, Axon staff will be available to provide onsite support if there are applicable designated project tasks that require onsite presence at the agency's location. Normal hours of operation for support are business days Monday to Friday 08:00 – 17:30, excluding public holidays. Post-system implementation, support is available via an assigned Axon customer success manager (CSM), as well as from Axon's Customer Support division. Live phone support is available 24 hours a day, seven days a week, including weekends and holidays. For technical or Customer Support assistance, you may contact a customer service representative at 800.978.2737 (extension 4), or via email at support@axon.com. Online, email-based support and remote-location troubleshooting are included on an ongoing basis as part of your investment in the Axon Ecosystem. ESCALATION We have a support team in place and aim to address all submitted cases within two business days. Axon has included multiple levels of support in our proposal, from a technical support team who handles daily issues, to an engineering support team who addresses critical or recurring issues. Issues are escalated through these support tiers based on their significance. The following describes our levels of support available by tiers (based on the nature and criticality of the issue): TIER 1 TECHNICAL SUPPORT - GENERAL HOW-TO QUESTIONS • Frequently asked questions (FAQs) • Product navigation • Feature clarification • Standard queries • Assistance with known solutions TIER 2 TECHNICAL SUPPORT • Advanced Product troubleshooting • Advanced Axon Evidence Configuration • Any Escalated issues from Tier 1 support TIER 3 ENGINEERING SUPPORT • Critical problem or recurring problems rendering the product inoperable or requiring workarounds, bug fixes, testing and/or simulation ISSUE SEVERITY TIERS AND RESOLUTION To align with our standard service level agreement, Axon categorizes each reported issue under the following Severity tiers. • SEVERITY 1 – This tier includes critical business functionality being down, a material impact on the customer's business, or non-existent workarounds. • SEVERITY 2 – This tier includes critical business functionality being impaired or degraded, a time-sensitive material impact affecting production, or the existence of temporary workarounds. • SEVERITY 3 – This tier includes non-critical business functionality being down or impaired, no significant impacts on the current product, or the existence of general support/operation inquiries. Each Severity tier has a targeted response and resolution time. • SEVERITY 1 – The targeted response time for a Severity 1 tier issue is less than one hour, and the targeted resolution time is less than 24 hours. • SEVERITY 2 – The targeted response time for a Severity 2 tier issue is less than 12 business hours, and the targeted resolution time is less than two weeks. • SEVERITY 3 –The targeted response time for a Severity 3 tier issue is approximately one business day, and the targeted resolution time is a mutually agreed-upon timeframe between Axon and the agency based on issue prioritization. Monthly, the Customer Service and Support team manager evaluates three calls for each team member. This audit checks adherence to policies, troubleshooting ability and customer satisfaction. Team members are evaluated on the scores they receive each month. Additionally, each team member is evaluated on their customer feedback score and the number of cases that remained unresolved after 24 hours. This helps Axon assess customer satisfaction and ensures that cases are handled in a timely manner.

31	Describe your ability and willingness to provide your products and services to Sourcewell participating entities in the United States.	Axon is fully able and willing to provide our products and services to Sourcewell participating entities in the United States.	*
32	Describe your ability and willingness to provide your products and services to Sourcewell participating entities in Canada.	Axon is fully able and willing to provide our products and services to Sourcewell participating entities in Canada.	*
33	Identify any geographic areas of the United States or Canada that you will NOT be fully serving through the proposed contract.	Axon is able to serve the entire United States and Canada through the proposed contract.	*
34	Identify any Sourcewell participating entity sectors (i.e., government, education, not-for-profit) that you will NOT be fully serving through the proposed contract. Explain in detail. For example, does your company have only a regional presence, or do other cooperative purchasing contracts limit your ability to promote another contract?	Axon will service all Sourcewell participating entity sectors covered by the proposed contract.	*
35	Define any specific contract requirements or restrictions that would apply to our participating entities in Hawaii and Alaska and in US Territories.	Axon does not have any specific contract requirements or restrictions that apply to participating entities in Alaska and US Territories. In Hawaii, please be aware that local laws and regulations require training at time of device purchase. Therefore, TASER devices must be purchased from an authorized TASER dealer or TASER trainer. Local dealers or trainers in Hawaii are listed online at https://taser.com/pages/hawaii. Whether TASER devices are legal to own or restrictions are in place is dependent on your state's local laws. Agencies can check state requirements for TASERs at https://taser.com/pages/state-requirements. This information should not be construed as legal advice and is offered for information purposes only. Axon strongly recommends that you consult with the state and local laws in your state for up-to-date information regarding the legality of TASER devices in your area.	*

Table 7: Marketing Plan

Line Item	Question	Response *	
36	Describe your marketing strategy for promoting this contract opportunity. Upload representative samples of your marketing materials (if applicable) in the document upload section of your response.	Axon promotes the use of cooperative contracts to its sales force by utilizing training, webinars, and other internal resources. Axon provides various marketing materials (i.e. product cards, program cards, and specification sheets) for customers' consideration regardless of if the agency chooses to purchase Axon products via a cooperative contract or via an agency-specific contract. Our Salesforce tracking system for order processing includes internal links to the available cooperative contracts which customers may use for purchasing Axon products. By ensuring our sales force has access to this information, our representatives are able to quickly provide details for agencies to engage in pricing discussions and justify purchasing via a cooperative. Representative samples of marketing material are included as additional attachments with our proposal.	*
37	Describe your use of technology and digital data (e.g., social media, metadata usage) to enhance marketing effectiveness.	We use technology and digital data to understand our audiences – broken out by users we have identified as well as anonymous users. The goal we're trying to achieve is converting our paid users to owned users through multiple technologies, such as retargeting, remarketing, email, social media, referral sites, search, and directory sites. We do not sell any user data to 3rd parties. By acquiring this data, we are able to find patterns and "look-a-likes" to better predict user flows and marketing efficiency.	*
38	In your view, what is Sourcewell's role in promoting contracts arising out of this RFP? How will you integrate a Sourcewell-awarded contract into your sales process?	Sourcewell can help promote membership to law enforcement agencies who may not realize they are members. Axon has seen in past interactions that many agencies do not know they are already members of a cooperative. If awarded a Sourcewell contract, Axon would take the following steps to integrate the contract into its sales process: • Announce the award to Axon's US and Canadian sales teams • Add the contract information to Axon's Customer Relationship Management (CRM) tool, Salesforce.com, so that sales reps can easily see all pertinent data • Add information on the contract to upcoming new hire sales trainings	*
39	Are your products or services available through an e-procurement ordering process? If so, describe your e-procurement system and how governmental and educational customers have used it.	Axon's e-commerce site requires an authorized login and purchase eligibility to access the system. The platform is intended to make ordering faster, easier, and more efficient. We allow authorized customers to pay by credit card or by Purchase Order when authorized by both the agency and Axon. The site also customizes product visibility, includes contracted pricing for each agency, and acts as one of our many ingestion points for orders. After an order is placed, it is processed just like any other order. As of today, the e-commerce site only supports the sale of hardware and warranties, but we are always looking to expand the number of Axon products we can support. In the next year, we hope to drastically improve our inventory, while also supporting contracts and extended warranties. Axon built our e-commerce site to provide our customers with another way to purchase hardware, and to do so quickly and efficiently. Through the e-commerce site, customers can also get answers to questions regarding RMA requests, invoice concerns, contract inquiries, product information, tax exemptions, etc., when they engage an e-commerce team member. For all inquiries outside our e-commerce team's skill set, they can ensure your questions get routed to the proper resource/contact.	*

Table 8: Value-Added Attributes

Line Item	Question	Response *	
40	Describe any product, equipment, maintenance, or operator training programs that you offer to Sourcewell participating entities. Include details, such as whether training is standard or optional, who provides training, and any costs that apply.	Axon provides standard user training for all proposed products. These costs are included in the professional services portion of the pricing attachment, and Axon employees provide the training. FULL-SCALE DE-ESCALATION TRAINING Axon will combine the delivery of our TASER CEWs to Sourcewell entities with an increased focus on de-escalation training. Axon will work with Sourcewell entities to provide a hybrid training approach including in-person classes as desired and remote/COVID-sensitive training for officers' safety. During project deployment, our professional services team will provide step-by-step explanations and assistance for the deployment of TASER energy weapons. Our professional services team also will provide users with training documentation, including user manuals, which can be used in future training sessions. Additionally, Axon offers online training classes with follow-up onsite training sessions for	

user CEW certification and recertification.

Our training aims to provide appropriate insight, skill, and knowledge, promoting all-around safety. We will provide Axon instructor training with the goal of educating instructors who can support the agency's subsequent training needs. With Axon's approach to training, including new content and tools, Axon will help officers reduce risk, retain information, and get hands-on experience with your devices before using them in the field.

Standard TASER energy weapon and VR training for Sourcewell entities may include, but is not limited to the following:
- TASER Operator Training (Tiers 1 -5, based on agency size)
- TASER 7 Instructor School
- TASER 7 Master Instructor School
- CEW Master Instructor School
- CEW 2 Day Product-Specific Instructor Course
- Community Engagement Training VR (based on agency size)

Training has always been a vital component in Axon's aim of increasing safety through technology. Thoughtfully designed, expert-led training programs will ensure officers are properly equipped to use TASER weapons, as well as other Axon products, safely and effectively.

With the proposed TASER training courses, Sourcewell entities can be confident in Axon's training program, which implements advanced technology to incite deeper learning.

AXON ACADEMY TRAINING
Axon Academy provides training on the use and maintenance of all TASER CEWs and Axon Evidence services. Training is geared toward the specific needs of law enforcement. CEW functions, medical issues, device maintenance and personal safety are just a few of the topics covered in the offered courses.

Through Axon Academy—our on-demand Learning Management System—Axon offers online, interactive courses to introduce TASER products and familiarize officers with the new CEW, including the science, components, and their intended use.

IN-PERSON TRAINING
Reimagined in-person training, including our TASER Master Instructor school, allows officers to build upon the knowledge and experiences imparted by online and virtual reality training programs. Axon developed a training suit and accompanying training cartridges that make it safer than ever to practice CEW deployments and encourage more hands-on preparation with the TASER before field use. *

ENHANCED VR TRAINING
Axon Virtual Reality Training can provide Sourcewell entities with a low-cost, easily-accessible training option to support your Use of Force or Crisis Intervention (CIT) training programs. Produced in collaboration with experts in crisis intervention, as well as clinicians and behavioral analysts, Axon's VR-based content is delivered in 360-video displayed on an HTC VIVE Focus Plus headset. This provides trainees with a first-person point-of-view of both a subject in crisis and a responding officer in various scenarios. While using the VR training simulator, agents/officers will have an opportunity to experience both viewpoints to better understand a situation, and then they must attempt to de-escalate the situation and reach a successful outcome.

The VIVE Focus Plus headset is an all-in-one VR headset that enables VR content to be distributed on a self-contained unit, eliminating the need to attach the headset to a PC, or place stationary trackers around a room as with other VR training solutions. Users can easily access the content my simply putting on the headset and accessing the Axon VR application. Because all the hardware and content are contained in the headset, multiple headsets can be distributed across multiple locations to streamline training across your organization.

LEARNING OBJECTIVES
By implementing Axon's training scenarios, trainees will:
- Gain a better understanding of what an individual in crisis is experiencing as law enforcement is called on the scene
- Be able to describe basic symptomology of psychiatric or developmental conditions
- Be able to identify best practices in verbal de-escalation and the use of force for individuals in crisis

AVAILABLE AND UPCOMING MODULES
Axon currently offers VR training modules that cover:
- DOMESTIC VIOLENCE – Helps officers identify if a person in the field might be a victim of domestic violence and equips them with tools to communicate more effectively
- SCHIZOPHRENIA – Provides strategies to better assist a person in the field suffering from Schizophrenia.
- AUTISM – Helps officers identify if a person in the field may have Autism and equips

		them with tools to communicate more effectively • SUICIDAL IDEATION – Helps officers respond to an individual in crisis who may be experiencing suicidal ideation • HARD OF HEARING – Helps officers identify if a person in the field has hearing loss and equips them with tools to communicate more effectively • ALZHEIMER'S/DEMENTIA – Provides strategies to better assist a person in the field who may be suffering from Alzheimer's/Dementia • PEER INTERVENTION – Helps officers determine when to intervene should a fellow deputy act inappropriately and/or deploy excessive force in the field • OFFICER POST-TRAUMATIC STRESS INJURY (PTSI) – Helps officers identify, mitigate, and cope with traumas they or their colleagues may encounter in the field • COMMUNITY POST-TRAUMATIC STRESS INJURY (PTSI) – Helps officers identify if a person they are addressing in the field is experiencing some form of PTSI An average training scenario length is 5 minutes – 15 minutes and is accessible through Axon's online learning management system, Axon Academy. As technology evolves, there are always new things to learn and new ways to learn them. We are dedicated to improving our VR-training services to best assist Sourcewell entities.	
41	Describe any technological advances that your proposed products or services offer.	As a company that strives to advance the efforts of public safety through technology whenever possible, Axon builds each product to be advanced and cutting-edge in its capabilities. The TASER energy weapon was officially introduced to law enforcement in 1998. Since then, we have been working tirelessly to further advance and refine the technology behind the lifesaving TASER energy weapon, while building a fully integrated platform of digital evidence capture and management software. Axon now represents a complete network of devices, applications, and services that leverage the latest technological innovations. Our continued dedication to the TASER energy weapon, successful endeavors into other areas of connected law enforcement technologies, and close partnerships with thousands of agencies around the globe have informed the development of the TASER 7 energy weapon —our most effective and intelligent TASER yet. Details for product technological advances are provided under the headers below. TASER 7 The TASER 7 field-tested device offers the following life-saving features that can help lead to safer outcomes: • Close-Range Optimization – 93% increased probe spread at close range, where 85% of deployments occur, according to agency reports • New Device Management Workflow – Administrators can assign devices in seconds with the Axon Device Manager application, and update firmware, upload logs and recharge the battery simply by docking it and walking • Improved Darts – TASER 7 darts fly straighter and faster with nearly twice the kinetic energy for better connection to the target, and the body of the dart breaks away to allow for attainment at tough angles • Adaptive Cross-Connect – Electricity is intentionally driven between all contacts to maximize the effectiveness of the probe deployment and to help compensate for close probe spreads or clothing disconnects. TASER X2 The TASER X2 field-tested device offers the following life-saving features that can help lead to safer outcomes: • A warning arc to prevent conflict from escalating and to reduce the risk of injury • Double-shot support in the event of a missed shot • Dual lasers to improve accuracy while aiming from varying distances • Cross-Connect technology to improve the strength of probe connections • Smart cartridge neuromuscular Incapacitation (NMI) technology to immobilize a suspect TASER X26P The TASER X26P field-tested device offers the following life-saving features that can help lead to safer outcomes: • A small and compact design that is easy to operate • A forward-facing design to make reloading easier in tense situations • Single-shot support to safely stop and detain a suspect • Neuromuscular Incapacitation (NMI) technology to immobilize a suspect AXON SIGNAL PERFORMANCE POWER MAGAZINE (SPPM) The Signal Performance Power Magazine (SPPM) is a battery accessory for TASER X2 and TASER X26P energy weapons. The TASER energy weapon battery reports to your camera when your weapon is armed so it can start recording, and logs the moment the trigger is pulled and the arc is engaged. Axon Signal technology lets officers focus on the critical situation in front of them, not on activating their camera. The SPPM allows you to automatically record events without lifting a finger, so you can	*

		focus on the situation in front of you. AXON VR In 2018, Axon began developing a VR solution, which led to the advent of our Community Engagement Training. Since then, we've partnered with more than 1,000 clients to deliver our solution as part of their training protocols. Over the past 4 years, Axon has built a team of VR-industry professionals who have worked at HTC and Microsoft, as well as various VR-focused gaming companies. Altogether, our VR team offers more than 30 years of experience working in the VR industry. As of 2021, Axon maintains a strategic partnership with HTC—who is one of the founding companies in the VR space—as an integrated solution vendor. We partner directly with the HTC engineering team to ensure seamless integration between their hardware and our software. By doing so, Axon can offer Sourcewell entities proven and reliable equipment that integrates with TASER 7 energy weapons and Axon Evidence. Whether training new recruits or veterans of the force, Sourcewell can benefit from our advanced VR technology and years of industry experience. Our latest Axon VR solution launched in Q1 2022. AVAILABLE AND UPCOMING MODULES Axon currently offers VR training modules that cover: • DOMESTIC VIOLENCE – Helps officers identify if a person in the field might be a victim of domestic violence and equips them with tools to communicate more effectively • SCHIZOPHRENIA – Provides strategies to better assist a person in the field suffering from Schizophrenia. • AUTISM – Helps officers identify if a person in the field may have Autism and equips them with tools to communicate more effectively • SUICIDAL IDEATION – Helps officers respond to an individual in crisis who may be experiencing suicidal ideation • HARD OF HEARING – Helps officers identify if a person in the field has hearing loss and equips them with tools to communicate more effectively • ALZHEIMER'S/DEMENTIA – Provides strategies to better assist a person in the field who may be suffering from Alzheimer's/Dementia • PEER INTERVENTION – Helps officers determine when to intervene should a fellow deputy act inappropriately and/or deploy excessive force in the field • OFFICER POST-TRAUMATIC STRESS INJURY (PTSI) – Helps officers identify, mitigate, and cope with traumas they or their colleagues may encounter in the field • COMMUNITY POST-TRAUMATIC STRESS INJURY (PTSI) – Helps officers identify if a person they are addressing in the field is experiencing some form of PTSI An average training scenario length is 5 minutes – 15 minutes and is accessible through Axon's online learning management system, Axon Academy. As technology evolves, there are always new things to learn and new ways to learn them. We are dedicated to improving our VR-training services to best assist Sourcewell entities.	
42	Describe any "green" initiatives that relate to your company or to your products or services, and include a list of the certifying agency for each.	Axon is continuously searching for opportunities to promote positive environmental practices that include sustainable management of materials during product procurement and end-of-life processes. We allow our vendors to manage the manufacturing of consumables to help reduce Axon's on-hand inventory, as well as the amount of expired product needing to be disposed of. When needed, Axon disposes of hazardous waste through the use of a Resource Conservation and Recovery Act (RCRA) permitted incinerator or fuel blending in RCRA permitted kilns. With these methods, Axon can reduce pollution more effectively than traditional disposal methods. Axon has also adopted the following sustainability measures: • We introduced a wire/spool recycling program related to TASER cartridges • We participate in the Travel Reduction Program sponsored by the Maricopa County Air Quality Department with the overall initiative to reduce air pollution in Maricopa County • We've set a goal to reduce employee air travel and commuting through the use of company-wide Zoom video conferencing • Axon also offers the following product end-of-life programs: • Provides customers with the ability to recycle their product batteries directly through the nationwide company, Battery Solutions, which also eliminates the need for customers to ship the batteries back to Axon for disposal • Performs an on-site shredding process of returned products not to be refurbished to ensure total breakdown and proper disposal Axon currently commits to recycling cardboard and paper and continues to research and develop initiatives to enhance our recycling programs to include metals, pallets, and plastics.	*

43	Identify any third-party issued eco-labels, ratings or certifications that your company has received for the equipment or products included in your Proposal related to energy efficiency or conservation, life-cycle design (cradle-to-cradle), or other green/sustainability factors.	Axon has adopted the following sustainability measures: • We introduced a wire/spool recycling program related to TASER cartridges • We participate in the Travel Reduction Program sponsored by the Maricopa County Air Quality Department with the overall initiative to reduce air pollution in Maricopa County • We've set a goal to reduce employee air travel and commuting through the use of company-wide Zoom video conferencing TASER energy weapons are designed to have an estimated useful life of five years. Additionally, 5-10% of the plastics used in manufacturing our products are made of recycled materials. Metals (zinc, copper wire, etc.) used in manufacturing our products are recyclable in municipal recycling streams.	*
44	Describe any Women or Minority Business Entity (WMBE), Small Business Entity (SBE), or veteran owned business certifications that your company or hub partners have obtained. Upload documentation of certification (as applicable) in the document upload section of your response.	Axon does not hold any WMBE, SBE, or veteran-owned business certifications.	*
45	What unique attributes does your company, your products, or your services offer to Sourcewell participating entities? What makes your proposed solutions unique in your industry as it applies to Sourcewell participating entities?	Axon's goal is to provide Sourcewell entities with the necessary products and services to help make the most of the public safety solutions you count on every day. Axon has been the sole developer of TASER energy weapons for nearly three decades. During this time, we have acquired hundreds of patents and heavily invested in research and development (R&D). With hundreds of R&D employees committed to improving our technology, we are confident we've created an effective and durable less-than-lethal option Sourcewell entities can rely on. Axon has deployed hundreds of thousands of TASER energy weapons all over the world—including in all 50 US states, Canada, and more than 10 other countries. TASER energy weapons have been the focus of more than 800 studies—making them the most studied on the market. The conclusions of these studies are clear: public safety agencies and communities benefit from the adoption of TASER devices. Researchers have confirmed that our devices: • Provide life-saving value during use-of-force interactions • De-escalate intense situations and reduce injury • Help reduce the risk of litigation and reduce workers' compensation claims For Sourcewell's convenience and further review, we have included our TASER Energy Weapon Research Index as an additional attachment which provides reference to the hundreds of TASER energy weapon studies that detail the safety and efficacy of these devices. SELECTED TASER STUDIES WAKE FOREST A US DOJ funded study by the Wake Forest University Baptist Medical Center study concluded that 99.75% of 1,201 field uses of TASER weapons in a wide range of drug and alcohol influences, ages, and race resulted in no significant injuries, demonstrating that the TASER device is the safest intermediate use-of-force option for police. HOUSTON STUDY In a longitudinal study, the Houston Police Department saw TASER devices help decrease workers' comp claims by 93%. Deploying alternative means of force has also shown to reduce suspect injuries by as much as 60%. US DEPARTMENT OF JUSTICE In a 5-year TASER safety study by the US Department of Justice, an expert panel of medical professionals concludes that the use of conducted energy devices by police officers on healthy adults does not present a high risk of death or serious injury. In comparing records 24,000+ use of force conflicts from 12 different agencies, a separate DOJ study found the risk of injury to suspects apprehended with TASER brand weapons typically fell more than 60% compared to the risk to suspects who were arrested without the devices, when all other conditions were similar. MACDONALD, ET AL. IN AMERICAN JOURNAL OF PUBLIC HEALTH In a peer-reviewed study, published in the American Journal of Public Health, MacDonald, Kaminski, and Smith examine less-lethal weapons including CEWs. Analyzing data from 12 police departments across 24,380 use-of-force cases involving injury to officers or civilians, this study found that "odds of injury to civilians and officers were significantly lower when police used CED weapons." Overall, the study concluded that when law enforcement agencies responsibly employ less-lethal weapons instead of physical force, injuries can be dramatically reduced.	*

FERDIK, ET AL. IN POLICE QUARTERLY
Using data from a representative sample of American law enforcement agencies, this independent study in Police Quarterly shows "that less restrictive CED policies are associated with increased CED usage and fewer fatal shootings by police." The results show that agencies policies which allowed wider use of CEDs, were "substantially and significantly associated with decreases in the number of fatal police shootings."

POLICE EXECUTIVE RESEARCH FOUNDATION
A Police Executive Research Foundation study found that CEWs led to fewer officer injuries and fewer suspect injuries. Use of TASER CEWs was associated with a 76% reduction in the chances of an officer being injured compared to agencies that do not use CEWs, and the odds of a suspect being injured were reduced by more than 40% in TASER CEW agencies compared to non-CEW agencies.

THE AMERICAN MEDICAL ASSOCIATION
The American Medical Association assessed that TASER devices are a "safe and effective tool" and "can save lives during interventions" when used appropriately.

AXON VR EXPERIENCE
In 2018, Axon began developing a VR solution, which led to the advent of our Community Engagement Training. Since then, we've partnered with more than 1,000 clients to deliver our solution as part of their training protocols. Over the past 4 years, Axon has built a team of VR-industry professionals who have worked at HTC and Microsoft, as well as various VR-focused gaming companies. Altogether, our VR team offers more than 30 years of experience working in the VR industry.

As of 2021, Axon maintains a strategic partnership with HTC—who is one of the founding companies in the VR space—as an integrated solution vendor. We partner directly with the HTC engineering team to ensure seamless integration between their hardware and our software. By doing so, Axon can offer Sourcewell entities proven and reliable equipment that integrates with TASER 7 energy weapons and Axon Evidence. Whether training new recruits or veterans of the force, Sourcewell can benefit from our advanced VR technology and years of industry experience.

Our latest Axon VR solution launched in Q1 2022.

VALUE OF THE AXON ECOSYSTEM
We've long made the priorities of law enforcement our own, and your challenges ours to solve. When you partner with Axon, you're partnering with a team of product experts, security professionals, engineers, technology specialists, and former law enforcement personnel. We are dedicated to pushing the boundaries of technology and are committed to delivering on those efforts, to offer Sourcewell entities the solutions needed to help make the world a safer place. By leveraging the Axon Ecosystem made up of connected devices and apps including TASER energy weapons and VR, Sourcewell entities can better position themselves to keep their officers and communities safe.

Table 9: Warranty

Describe in detail your manufacturer warranty program, including conditions and requirements to qualify, claims procedure, and overall structure. You may upload representative samples of your warranty materials (if applicable) in the document upload section of your response in addition to responding to the questions below.

Line Item	Question	Response *	
46	Do your warranties cover all products, parts, and labor?	Axon warrants that its law enforcement hardware products which are manufactured by Axon are free from defects in workmanship and materials for a period of one (1) year from the date of receipt. Axon-manufactured accessories are covered under a limited ninety-day warranty from the date of receipt. Non-Axon manufactured accessories are covered under the manufacturer's warranty. There are extended warranties available as defined in the Axon Master Services and Purchasing Agreement (MSPA) uploaded with our response. For some solutions we are authorized resellers of hardware. Products that we are authorized to resell abide by the manufacturer's warranty. Further details can be provided upon request.	*
47	Do your warranties impose usage restrictions or other limitations that adversely affect coverage?	Restrictions are outlined in our warranty terms, which have been included in the uploaded MSPA.	*
48	Do your warranties cover the expense of technicians' travel time and mileage to perform warranty repairs?	Our warranties do not cover the expense of technicians' travel time and mileage to perform warranty repairs.	*
49	Are there any geographic regions of the United States or Canada (as applicable) for which you cannot provide a certified technician to perform warranty repairs? How will Sourcewell participating entities in these regions be provided service for warranty repair?	Axon can provide a certified technician to perform warranty repairs for any geographic regions of the United States or Canada as applicable. Axon will be available 24 hours/7 days per week by phone for emergency technical support for any system outage, and if mutually agreed upon by both parties, we can provide onsite support for local issues. If a site visit is deemed necessary due to an issue (i.e. access point failures or accidental cut wires) and not an Axon or Axon Evidence issue there may be a charge assessed to the agency.	*
50	Will you cover warranty service for items made by other manufacturers that are part of your proposal, or are these warranties issues typically passed on to the original equipment manufacturer?	Axon will troubleshoot these devices to the best of our ability. If we are unable to resolve the issue and the devices require warranty service, this will be performed by the manufacturer.	*
51	What are your proposed exchange and return programs and policies?	Axon does not allow exchanges. Please see the uploaded MSPA for full details. The Return Material Authorization (RMA) department is located at Axon Headquarters in Scottsdale, Arizona. The RMA department prioritizes returned products for analysis and/or repair on a first-in-first-out (FIFO) basis, based on the severity of the complaint (or unless otherwise requested by the agency). The general turn-around time for a full resolution is less than 30 calendar days from receipt of the returned product. Axon provides agencies with the ability to manage RMA requests within Axon Evidence. Authorized users will be able to create, update, save, submit, and track device returns for their agency in one place. Axon Evidence Device Return Service is integrated with FedEx and return shipping labels are provided at no extra charge. RMAs may also be generated at returns.axon.com, although return shipping labels are not available via this method. Upon receipt of the item(s), the RMA department will conduct a failure analysis investigation to determine the root cause of the issue and repair the item if possible. It is at Axon's sole discretion to repair or replace a device as identified in the original manufacturer warranty and/or the extended warranty policy.	*
52	Describe any service contract options for the items included in your proposal.	Please refer to the attached MSPA for full service contract options for the proposed items.	*

Table 10: Payment Terms and Financing Options

Line Item	Question	Response *	
53	Describe your payment terms and accepted payment methods.	Payment terms are Net 30. For accepted payment methods, Axon can process via P-card if necessary but prefers ACH payments whenever possible.	*
54	Describe any leasing or financing options available for use by educational or governmental entities.	Axon does not offer leasing or financing options. Alternatively, Axon offers a provision in its MSPA which allows for cancellation by the agency if sufficient funds are not appropriated.	*
55	Describe any standard transaction documents that you propose to use in connection with an awarded contract (order forms, terms and conditions, service level agreements, etc.). Upload a sample of each (as applicable) in the document upload section of your response.	Axon's Master Services and Purchasing Agreement (MSPA) is a standard transaction document that includes the terms and conditions we propose to use in connection with an awarded contract. A sample MSPA has been uploaded with our response.	*
56	Do you accept the P-card procurement and payment process? If so, is there any additional cost to Sourcewell participating entities for using this process?	Axon can process via P-card if necessary but prefers ACH payments whenever possible. There is not an additional cost to Sourcewell participating entities for using this process.	*

Table 11: Pricing and Delivery

Provide detailed pricing information in the questions that follow below. Keep in mind that reasonable price and product adjustments can be made during the term of an awarded Contract as described in the RFP, the template Contract, and the Sourcewell Price and Product Change Request Form.

Line Item	Question	Response *	
57	Describe your pricing model (e.g., line-item discounts or product-category discounts). Provide detailed pricing data (including standard or list pricing and the Sourcewell discounted price) on all of the items that you want Sourcewell to consider as part of your RFP response. If applicable, provide a SKU for each item in your proposal. Upload your pricing materials (if applicable) in the document upload section of your response.	Axon is proposing a Product-Category Volume-Based Discount model for Sourcewell participating entities. The discount increases as the order quantity increases. Please see question #58 and the document in the pricing materials section for full details.	*
58	Quantify the pricing discount represented by the pricing proposal in this response. For example, if the pricing in your response represents a percentage discount from MSRP or list, state the percentage or percentage range.	Axon is proposing the following discount model based on order quantity. This discount model applies to Axon manufactured items. This does not apply to items which Axon resells as part of its offerings. Please see the uploaded price sheet, included in the document section. Axon is proposing the following discount schedule based on order quantity. • Quantity: 1 • Customer Discount % off MSRP: 0.00% • Quantity: 2-99 • Customer Discount % off MSRP: 1.00% • Quantity: 100-249 • Customer Discount % off MSRP: 3.00% • Quantity: 250-499 • Customer Discount % off MSRP: 5.00% • Quantity: 500-999 • Customer Discount % off MSRP: 7.00% • Quantity 1000+ • Customer Discount % off MSRP: 10.00%	*

59	Describe any quantity or volume discounts or rebate programs that you offer.	Axon is proposing the following discount schedule based on order quantity. • Quantity: 1 • Customer Discount % off MSRP: 0.00% • Quantity: 2-99 • Customer Discount % off MSRP: 1.00% • Quantity: 100-249 • Customer Discount % off MSRP: 3.00% • Quantity: 250-499 • Customer Discount % off MSRP: 5.00% • Quantity: 500-999 • Customer Discount % off MSRP: 7.00% • Quantity 1000+ • Customer Discount % off MSRP: 10.00%	*
60	Propose a method of facilitating "sourced" products or related services, which may be referred to as "open market" items or "nonstandard options". For example, you may supply such items "at cost" or "at cost plus a percentage," or you may supply a quote for each such request.	Axon sells at the sourced party's MSRP. Discounts may be applied in certain situations on sourced items, on a case-by-case basis.	*
61	Identify any element of the total cost of acquisition that is NOT included in the pricing submitted with your response. This includes all additional charges associated with a purchase that are not directly identified as freight or shipping charges. For example, list costs for items like pre-delivery inspection, installation, set up, mandatory training, or initial inspection. Identify any parties that impose such costs and their relationship to the Proposer.	Axon has included all available installation and training options in our pricing. Our sales representatives can discuss options with each participating entity during the ordering process. We encourage agencies to take advantage of our experienced Professional Services team for installation and training, but it is not mandatory. We offer several options at different price points for agencies at various budgets.	*
62	If freight, delivery, or shipping is an additional cost to the Sourcewell participating entity, describe in detail the complete freight, shipping, and delivery program.	Freight, delivery, and shipping are included in our costs.	*
63	Specifically describe freight, shipping, and delivery terms or programs available for Alaska, Hawaii, Canada, or any offshore delivery.	Freight, shipping, and delivery are included in the costs for Alaska, Hawaii, Canada, and offshore delivery to US territories. Please note that all taxes, duties, and customs, where applicable, are the responsibilities of the customer.	*
64	Describe any unique distribution and/or delivery methods or options offered in your proposal.	Axon offers expedited shipping through FedEx upon request.	*

Table 12: Pricing Offered

Line Item	The Pricing Offered in this Proposal is: *	Comments
65	b. the same as the Proposer typically offers to GPOs, cooperative procurement organizations, or state purchasing departments.	

Table 13: Audit and Administrative Fee

Line Item	Question	Response *	
66	Specifically describe any self-audit process or program that you plan to employ to verify compliance with your proposed Contract with Sourcewell. This process includes ensuring that Sourcewell participating entities obtain the proper pricing, that the Vendor reports all sales under the Contract each quarter, and that the Vendor remits the proper administrative fee to Sourcewell. Provide sufficient detail to support your ability to report quarterly sales to Sourcewell as described in the Contract template.	Axon utilizes Salesforce.com as its CRM tool and Microsoft Dynamics AX as its enterprise resource-planning tool. When a sales representative provides a customer a quote utilizing the cooperative, the sales representative will select the cooperative contract within Salesforce.com. At the end of the quarter, our Sales Operations team runs a report in Salesforce.com to see all deals that closed the previous quarter for each cooperative that requires reporting. Because a sale could be closed in Salesforce but not actually shipped or invoiced for, we then run that information in Microsoft AX. Microsoft AX allows us to see if the ship date occurred within the reporting quarter and the amount that we invoiced to the customer. Once we have all pertinent data, we put it into an Excel spreadsheet to guide us in reporting the cooperative sales data.	*
67	If you are awarded a contract, provide a few examples of internal metrics that will be tracked to measure whether you are having success with the contract.	Axon will track the following internal metrics to measure success with the contract: • The number of agencies who utilize the cooperative • The dollar amount of sales associated with the cooperative • The length of time it takes to update the contract after new products/services are announced by Axon	*
68	Identify a proposed administrative fee that you will pay to Sourcewell for facilitating, managing, and promoting the Sourcewell Contract in the event that you are awarded a Contract. This fee is typically calculated as a percentage of Vendor's sales under the Contract or as a per-unit fee; it is not a line-item addition to the Member's cost of goods. (See the RFP and template Contract for additional details.)	Axon will pay 2% on the initial shipment or 1% on a multi-year sale.	*

Table 14A: Depth and Breadth of Offered Equipment Products and Services

Line Item	Question	Response *	
69	Provide a detailed description of the equipment, products, and services that you are offering in your proposal.	Axon is offering a number of products that will fit the needs of Sourcewell participating entities. We have described our various offerings under the headers below and provided product cards and specification sheets as separate attachments for additional details. TASER 7 The TASER 7 energy weapon is a firmware upgradable, 2-shot weapon with an estimated useful life of five years. The TASER 7 energy weapon is manufactured by Axon Enterprise, Inc. (Axon) exclusively. The TASER 7 energy weapon uses two replaceable TASER 7 energy weapon Cartridges (cartridges) containing compressed nitrogen to deploy two small probes that attach to the weapon by insulated conductive wires. The weapon transmits electrical pulses along the wires and into the body. These pulses are designed to affect the sensory and motor functions of the peripheral nervous system and cause involuntary muscle contractions, or Nero Muscular Incapacitation (NMI). It also is possible to produce a Warning Arc display or drive-stun without deploying any of the cartridges loaded in the energy weapon. The TASER 7 energy weapon has an internal memory that stores the operating firmware and a record of every deployment. The TASER 7 energy weapon's log can be uploaded to Axon Evidence for review and storage to ensure proper operation and use of the TASER energy weapons. CONFIDENCE IN THE FIELD The advanced performance of TASER 7 energy weapon leads to greater confidence in the field and provides Sourcewell with the most effective TASER weapon ever. Enhanced connection to the Axon network unlocks streamlined workflows, and it's all backed by groundbreaking training that helps show your commitment to your community. KEY FEATURES • Close-Range Optimization – 93% increased probe spread at close range,	

where 85% of deployments occur, according to agency reports
- New Device Management Workflow – Administrators can assign devices in seconds with the Axon Device Manager application, and update firmware, upload logs and recharge the battery simply by docking it and walking
- Improved Darts – TASER 7 darts fly straighter and faster with nearly twice the kinetic energy for better connection to the target, and the body of the dart breaks away to allow for attainment at tough angles
- Adaptive Cross-Connect – Electricity is intentionally driven between all contacts to maximize the effectiveness of the probe deployment and to help compensate for close probe spreads or clothing disconnects.

KEY SPECIFICATIONS
- Weather Resistant – IP53 Ingress Protection MIL-STD-810G Test Method 510.6 (sand and dust), Method 506.6 (rain) IEC 60529
- Housing – High Impact Polymer
- Operating Temperature – - 4 °F to 122 °F [-20° C to 50° C]
- Drop Test – 4 Feet
- Humidity – 95% Relative, Non-condensing
- Top Laser – High-Visibility Green Class 2
- Bottom Laser – Red Class 2
- Illumination – 210 Lumen Light Emitting Diode (LED)
- Warranty – 1 year from date of receipt
- Service Life – 5 Years (Recommended)

RAPID ARC TECHNOLOGY
New rapid arc technology outperforms all previous TASER energy weapons—even in instances of narrow probe spreads—and adaptive cross-connect helps enable full incapacitation even at close range. Spiral darts fly straighter and faster toward a daylight green laser with nearly double the kinetic energy to compress loose hanging clothing.

CONNECT TO SAVE TIME
TASER 7 energy weapon is the first TASER energy weapon to be wirelessly connected to the Axon network. This lets you unlock new benefits like easier inventory management and firmware updates, all without needing the cable required for previous TASER energy weapons. You can recharge batteries via docking and walking and even assign weapons and accessories in seconds with the Axon Device Manager mobile application.

BETTER TOGETHER: OFFICER SAFETY PLAN 7+
Keep your communities safe and save critical budget by bundling our products and services. Officer Safety Plan 7+ (OSP7+) provides your agency with next-generation devices and software, delivering seamless integration, budget predictability, and automatic upgrades. By investing in an OSP, Sourcewell can create process efficiencies by having your devices and evidence management tools working together on the same network.

TASER X2
The TASER X2 offers double-shot technology that features a backup shot and warning arc to increase voluntary surrenders. We've built the TASER X2 to give officers a less-lethal option to resolve high-conflict situations while limiting harm to themselves and citizens.

KEY FEATURES
This field-tested device offers the following life-saving features that can help lead to safer outcomes:
- A warning arc to prevent conflict from escalating and to reduce the risk of injury
- Double-shot support in the event of a missed shot
- Dual lasers to improve accuracy while aiming from varying distances
- Cross-Connect technology to improve the strength of probe connections
- Smart cartridge neuromuscular Incapacitation (NMI) technology to immobilize a suspect

KEY SPECIFICATIONS
- Weather Resistance – IEC 60529 IPx2 (rain), MIL-STD-810G Method 510.5, Procedure 1 (dust)
- Housing – High-impact polymer
- Power Activation – Ambidextrous safety switch
- Operating Temperature – - 4 °F to 122 °F [-20 °C to 50 °C]
- Storage Temperature – - 4 °F to 122 °F [-20 °C to 50 °C]
- Drop Test – 4 feet
- Humidity – 80% non-condensing
- Warranty – 1 year from date of receipt

TASER X26P

The TASER X26P is our smallest and most compact energy weapon. The TASER X26P gives officers the space and time needed to reach peaceful outcomes. More than that, using a non-lethal method of resolving conflict helps build trust amongst the communities you serve.

KEY FEATURES *
- Compact Design
- Easier Reload
- Trilogy Logs
- All Digital Platform

KEY SPECIFICATIONS
- Weather Resistance – IEC 60529 IPx2 (rain), MIL-STD-810G Method 510.5, Procedure 1 (dust)
- Housing – High-impact polymer
- Power Activation – Ambidextrous safety switch
- Operating Temperature – - 4 °F to 122 °F [-20 °C to 50 °C]
- Storage Temperature – - 4 °F to 122 °F [-20 °C to 50 °C]
- Drop Test – 4 Feet
- Humidity – 80% non-condensing
- Warranty – 1 year from date of receipt

AXON SIGNAL PERFORMANCE POWER MAGAZINE (SPPM)
- Axon SPPM is a separate battery pack for the TASER X2 and X26P conducted electrical weapons for automatic activation of Axon cameras.
- Shifting the safety switch on the X2 or X26P from the down (SAFE) to the up (ARMED) positions sends a signal from the SPPM. Upon processing the signal, an Axon system equipped with Axon Signal technology transitions from the BUFFERING to EVENT mode. Axon Signal technology only works with Axon cameras.
- The TASER 7 energy weapon automatically includes built-in Axon Signal functionality and does not require SPPM.

AXON VR
When taking on the challenge of designing a comprehensive VR solution, Axon focused on creating lifelike environments that could be accessed from almost anywhere. With an advanced HTC headset that tracks physical movement, agencies can scale training sessions to fit almost any space. Gone are the days of installing expensive stationary equipment or overburdening trainees with unnecessary accessories. Axon has built a VR training system that is extremely adaptable, not only to physical environments but to the needs of your agency.

Axon VR is comprised of the following components:
- HTC Headset with Simulator and Community Engagement Training Modules
- Glock 17 Training Handle
- TASER 7 Training Handle, Battery Pack, and Dock
- TASER 7 VR Standoff and Close-Quarters Cartridges
- Samsung S7+ Tablet
- Hand-Motion Tracking Bracelet

SIMULATOR TRAINING
Axon's Simulator Training places trainees in a responding deputy's shoes and provides full autonomy within an environment. The trainee can then talk with, interact with, and move about the virtual environment with very few limitations. During a training session, trainees will handle a variety of VR controllers—such as a TASER 7 energy weapon or Glock 17—to practice and train with. Handling these different controllers while in the simulation can help improve muscle memory and instill a familiarity with weapons and devices in tense situations.

Additionally, training facilitators can interact with the trainee in real-time by controlling the actions and responses of simulated characters with a handheld tablet connected to the HTC headset via Wi-Fi. A cloud server processes the interactions, allowing the trainer and trainee to interact together—even if the two are separated.

In the future, our solution will allow trainers to embody and act as one of the other scenario participants, which can introduce erratic behavior or behavior that can incite a crowd, thus exposing a trainee to unpredictable actions.

Different scenario variables—such as the type of situation being responding to and/or the particular trainee weapon being drawn—can be adjusted at the start of every session. Once a session is complete, an after-action report is generated and allows a trainer to grade a trainee on their performance.

In the future, trainers will be able to fully create environments and scenarios from scratch using a custom scenario editor. These scenarios will use virtual subjects meaning no actors are needed, which can help maintain a higher level of consistency in a training environment.

		Our simulator solution was purposefully designed to be easily deployable, without the need for live actors or role-playing. Because the solution uses the advanced VR headset and bracelet for movement tracking, no additional room calibration or sensors are necessary. COMMUNITY ENGAGEMENT TRAINING Our Community Engagement Training focuses on providing key situational learning objectives and de-escalation tactics when encountering a wide variety of scenarios. These trainings are delivered in 360-degree videos with branching narratives, meaning that trainees can select different tactics and responses at key decision points throughout the narrative. This allows trainees to see the steps they can take to de-escalate a scene. Topics range from mental health calls such as Schizophrenic or Suicidal individuals to unique populations such as Hard of Hearing or Autistic individuals to internal challenges within an agency such as Peer Intervention or Officer Suicide. Trainees will have an opportunity to experience both viewpoints to better understand a situation, and then attempt to de-escalate the situation to reach a successful outcome. LEARNING OBJECTIVES By implementing Axon's Community Engagement Training, trainees will gain a better understanding of what an individual in crisis is experiencing as law enforcement is called on the scene. Additionally, they will be able to describe the basic symptomology of psychiatric or developmental conditions, as well as identify best practices when conducting verbal de-escalations or determining use of force on individuals in crisis. Furthermore, optional online courses are available in Axon Academy that accompany each training topic, so trainees can learn more about the specific conditions, illnesses, or community groups they may encounter. REALISTIC AND IMMERSIVE SCENARIOS Axon utilizes VR headsets to provide trainees with an accurate first-person perspective of an individual in a state of crisis that otherwise could not be experienced. Given that VR has been shown to have higher rates of memory retention than traditional educational tools, these trainings will increase a trainee's application of learned soft skills in difficult, high-stakes situations. EFFECTIVE TRAINING Axon has worked with experts in crisis intervention and mental health to develop a truly informative and empathetic experience for subjects undergoing symptoms of Schizophrenia, Autism Spectrum Disorder, and Suicidal Ideations. By using Axon's VR modules to better understand the symptoms and stressors of a variety of mental health disorders, trainees will have the knowledge to confidently interact with individuals experiencing conditions that would prohibit them from complying with a deputy's verbal commands.	
70	Within this RFP category there may be subcategories of solutions. List subcategory titles that best describe your products and services.	Our included pricing is split into the following subcategories for US pricing and for Canadian pricing: • TASER 7 Hardware and Accessories • TASER X2 Hardware and Accessories • TASER X26P Hardware and Accessories • Axon Virtual Reality (VR) Software, Hardware, and Accessories • Professional Services – TASERs • Professional Services – Axon VR • Warranties – TASERs • Warranties – Avon VR • Miscellaneous TASER Hardware and Accessories • TASER Bundles	*

Table 14B: Depth and Breadth of Offered Equipment Products and Services

Indicate below if the listed types or classes of equipment, products, and services are offered within your proposal. Provide additional comments in the text box provided, as necessary.

Line Item	Category or Type	Offered *	Comments	
71	Devices and tools which deliver a high voltage, low amperage electrical charge, via probes ejected from the device or the device itself, which is designed to be less lethal and incapacitate a subject for the purposes of law enforcement taking the subject into custody or controlling the subject;	(•) Yes ( ) No	The proposed TASER 7, TASER X2, and TASER X26P devices and tools have been designed to deliver a high voltage, low amperage electrical charge, via probes ejected from the device or the device itself, which is designed to be less lethal and incapacitate a subject for the purposes of law enforcement taking the subject into custody or controlling the subject.	*
72	Parts and accessories, including belts, holsters, pouches, batteries, replacement cartridges, designed for duty deployment of the above devices described in Line 71 above, along with systems and applications which assist in managing, maintaining, and recovering data from the device;	(•) Yes ( ) No	The proposed TASER accessories include belt loops/clips, holsters, batteries, and replacement cartridges designed for duty deployment with those devices described in line 71 above. Additionally, Axon has proposed the necessary Axon systems and applications which assist in managing, maintaining, and recovering data from the TASER devices.	*
73	Related services, including maintenance, repair, training, service, and maintenance agreements.	(•) Yes ( ) No	Axon has proposed the associated installation and training services for the TASER items listed in questions 71 and 72 in our pricing. Please refer to the attached MSPA for details on maintenance and repair terms and conditions.	*

Table 15: Industry Specific Questions

Line Item	Question	Response *	
74	Do your products have any state or federal authorizations for use?	Yes, whether TASER devices are legal to own or restrictions are in place is dependent on your state's local laws. Agencies can check state requirements for TASERs at https://taser.com/pages/state-requirements. This information should not be construed as legal advice and is offered for information purposes only. Axon strongly recommends that you consult with the state and local laws in your state for up-to-date information regarding the legality of TASER devices in your area.	*
75	Do your products meet any nationally recognized law enforcement standards (e.g. Department of Justice – DOJ or National Institute of Justice – NIJ) or security standards (e.g. Criminal Justice Information Services – CJIS)?	Yes, the proposed Axon products meet nationally recognized law enforcement standards for the DOJ and NIJ and security standards for CJIS.	

Exceptions to Terms, Conditions, or Specifications Form

Only those Proposer Exceptions to Terms, Conditions, or Specifications that have been accepted by Sourcewell have been incorporated into the contract text.

Documents

Ensure your submission document(s) conforms to the following:

1. Documents in PDF format are preferred. Documents in Word, Excel, or compatible formats may also be provided.

2. Documents should NOT have a security password, as Sourcewell may not be able to open the file. It is your sole responsibility to ensure that the uploaded document(s) are not either defective, corrupted or blank and that the documents can be opened and viewed by Sourcewell.

3. Sourcewell may reject any response where any document(s) cannot be opened and viewed by Sourcewell.

4. If you need to upload more than one (1) document for a single item, you should combine the documents into one zipped file. If the zipped file contains more than one (1) document, ensure each document is named, in relation to the submission format item responding to. For example, if responding to the Marketing Plan category save the document as "Marketing Plan."

- Pricing - Sourcewell Co-op CEW Pricing_9.26.22.pdf - Monday September 26, 2022 22:59:44
- Financial Strength and Stability - Financial Strength and Stability Attachments.zip - Monday September 26, 2022 23:08:27
- Marketing Plan/Samples - Marketing Plan Sample Documents.zip - Monday September 26, 2022 23:07:27
- WMBE/MBE/SBE or Related Certificates (optional)
- Warranty Information (optional)
- Standard Transaction Document Samples - Sample Transaction Doc_COOP_Sourcewell CEW_MSPA.pdf - Monday September 26, 2022 23:10:56
- Upload Additional Document - Additional Attachments.zip - Monday September 26, 2022 23:13:32

Addenda, Terms and Conditions

PROPOSER AFFIDAVIT AND ASSURANCE OF COMPLIANCE

I certify that I am the authorized representative of the Proposer submitting the foregoing Proposal with the legal authority to bind the Proposer to this Affidavit and Assurance of Compliance:

1. The Proposer is submitting this Proposal under its full and complete legal name, and the Proposer legally exists in good standing in the jurisdiction of its residence.

2. The Proposer warrants that the information provided in this Proposal is true, correct, and reliable for purposes of evaluation for contract award.

3. The Proposer, including any person assisting with the creation of this Proposal, has arrived at this Proposal independently and the Proposal has been created without colluding with any other person, company, or parties that have or will submit a proposal under this solicitation; and the Proposal has in all respects been created fairly without any fraud or dishonesty. The Proposer has not directly or indirectly entered into any agreement or arrangement with any person or business in an effort to influence any part of this solicitation or operations of a resulting contract; and the Proposer has not taken any action in restraint of free trade or competitiveness in connection with this solicitation. Additionally, if Proposer has worked with a consultant on the Proposal, the consultant (an individual or a company) has not assisted any other entity that has submitted or will submit a proposal for this solicitation.

4. To the best of its knowledge and belief, and except as otherwise disclosed in the Proposal, there are no relevant facts or circumstances which could give rise to an organizational conflict of interest. An organizational conflict of interest exists when a vendor has an unfair competitive advantage or the vendor's objectivity in performing the contract is, or might be, impaired.

5. The contents of the Proposal have not been communicated by the Proposer or its employees or agents to any person not an employee or legally authorized agent of the Proposer and will not be communicated to any such persons prior to Due Date of this solicitation.

6. If awarded a contract, the Proposer will provide to Sourcewell Participating Entities the equipment, products, and services in accordance with the terms, conditions, and scope of a resulting contract.

7. The Proposer possesses, or will possess before delivering any equipment, products, or services, all applicable licenses or certifications necessary to deliver such equipment, products, or services under any resulting contract.

8. The Proposer agrees to deliver equipment, products, and services through valid contracts, purchase orders, or means that are acceptable to Sourcewell Members. Unless otherwise agreed to, the Proposer must provide only new and first-quality products and related services to Sourcewell Members under an awarded Contract.

9. The Proposer will comply with all applicable provisions of federal, state, and local laws, regulations, rules, and orders.

10. The Proposer understands that Sourcewell will reject RFP proposals that are marked "confidential" (or "nonpublic," etc.), either substantially or in their entirety. Under Minnesota Statutes Section 13.591, subdivision 4, all proposals are considered nonpublic data until the evaluation is complete and a Contract is awarded. At that point, proposals become public data. Minnesota Statutes Section 13.37 permits only certain narrowly defined data to be considered a "trade secret," and thus nonpublic data under Minnesota's Data Practices Act.

11. Proposer its employees, agents, and subcontractors are not:
    1. Included on the "Specially Designated Nationals and Blocked Persons" list maintained by the Office of Foreign Assets Control of the United States Department of the Treasury found at: https://www.treasury.gov/ofac/downloads/sdnlist.pdf;

    2. Included on the government-wide exclusions lists in the United States System for Award Management found at: https://sam.gov/SAM/; or

    3. Presently debarred, suspended, proposed for debarment, declared ineligible, or voluntarily excluded from programs operated

by the State of Minnesota; the United States federal government or the Canadian government, as applicable; or any Participating Entity. Vendor certifies and warrants that neither it nor its principals have been convicted of a criminal offense related to the subject matter of this solicitation.

☑ By checking this box I acknowledge that I am bound by the terms of the Proposer's Affidavit, have the legal authority to submit this Proposal on behalf of the Proposer, and that this electronic acknowledgment has the same legal effect, validity, and enforceability as if I had hand signed the Proposal. This signature will not be denied such legal effect, validity, or enforceability solely because an electronic signature or electronic record was used in its formation. - Robert E. Driscoll, Jr., VP, Associate General Counsel and Assistant Corporate Secretary, Axon Enterprise, Inc.

The Proposer declares that there is an actual or potential Conflict of Interest relating to the preparation of its submission, and/or the Proposer foresees an actual or potential Conflict of Interest in performing the contractual obligations contemplated in the bid.

○ **Yes** ◉ **No**

The Bidder acknowledges and agrees that the addendum/addenda below form part of the Bid Document.

Check the box in the column "**I have reviewed this addendum**" below to acknowledge each of the addenda.

File Name	I have reviewed the below addendum and attachments (if applicable)	Pages
Addendum_2_ Conducted_Energy_Weapons_RFP_092722 Mon September 19 2022 04:33 PM	☑	1
Addendum_1_ Conducted_Energy_Weapons_RFP_092722 Wed August 17 2022 03:13 PM	☑	1

DocuSign Envelope ID: 217A34AC-143D-42CB-8223-CA4C4501AB0A

AMENDMENT #1
TO
CONTRACT #092722-AXN

THIS AMENDMENT is effective upon the date of the last signature below by and between **Sourcewell** and **Axon Enterprise Inc.** (Supplier).

Sourcewell awarded a contract to Supplier to provide Conducted Energy Weapons, to Sourcewell and its Participating Entities, effective February 3, 2023, through November 21, 2026 (Contract).

Supplier has updated its administrative fee terms, found in Line Item 68 under "Table 13: Audit and Administrative Fee." The current language is deleted in its entirety and replaced with the following:

> In consideration for the support and services provided by Sourcewell, the Supplier will pay to Sourcewell an administrative fee of 1.05% on all Equipment, Products and Services provided to Participating Entities. For the purpose of calculating the fee, this fee change is effective for all sales made July 1, 2023, onward.

Except as amended above, the Original Agreement remains in full force and effect.

Sourcewell

DocuSigned by:
By: Jeremy Schwartz
C0FD2A139D06489...

Jeremy Schwartz, Director of Operations/CPO

Date: 7/14/2023 | 9:00 AM CDT

Approved:

DocuSigned by:
By: Chad Coauette
48BAF71B0894454...

Chad Coauette, Executive Director/CEO

Date: 7/14/2023 | 10:42 AM CDT

Axon Enterprise Inc.

DocuSigned by:
By: Robert E. Driscoll Jr.
55DAEBB131A4424...

Robert E. Driscoll, Jr.

Title: VP, Associate General Counsel

Date: 7/14/2023 | 8:20 AM MST

Docusign Envelope ID: C8638121-10CD-42B7-A5A3-63C409255622

AMENDMENT #2
TO
CONTRACT #092722-AXN

THIS AMENDMENT is effective upon the date of the last signature below and is by and between **Sourcewell** and **Axon Enterprise Inc.** (Supplier).

Sourcewell awarded a contract to the Supplier to provide Conducted Energy Weapons to Sourcewell and its Participating Entities, effective February 3, 2023, through November 21, 2026.

The parties wish to amend the following terms within the Contract:

1. In Section 6, PARTICIPATING ENTITY USE AND PURCHASING, Subsection B. ADDITIONAL TERMS AND CONDITIONS/PARTICIPATING ADDENDUM.:

   Remove the following text in its entirety:
   "Supplier may require the use of its then-current Master Services and Purchasing Agreement (or similar standard terms and conditions document), a copy of which may be found at https://www.axon.com/sales-terms-and-conditions."

   Replace with the following:
   "The Supplier's TASER Energy Weapon Agreement, attached hereto as Exhibit A, is hereby incorporated into this Contract.".

Except as amended above, the Contract remains in full force and effect.

Sourcewell

Signed by:
By: Jeremy Schwartz
C0FD2A139D06489...
Jeremy Schwartz, Chief Procurement Officer

Date: 9/3/2024 | 1:44 PM CDT

Axon Enterprise Inc.

Signed by:
By: Robert E. Driscoll Jr.
55DAEBB131A4424...
Robert E. Driscoll Jr.

Title: VP, Associate General Counsel

Date: 9/3/2024 | 11:41 AM MST

Docusign Envelope ID: C8638121-10CD-42B7-A5A3-63C409255622

Exhibit A

Axon Enterprise, Inc.'s TASER Energy Weapon Agreement

This TASER Energy Weapon Agreement ("**Agreement**") applies to Agency's TASER 7 or TASER 10 purchase from Axon Enterprise, Inc. ("**Axon**"). Agency will receive TASER 7 or TASER 10 Conducted Energy Weapon ("**CEW**") hardware, accessories, warranty, and services documented in the attached Quote Appendix ("**Quote**").

1. **Term**. The start date is based on the initial shipment of TASER 7 or TASER 10 hardware ("**Start Date**"). If shipped in the first half of the month, the Start Date is the 1st of the following month. If shipped in the last half of the month, the Start Date is the 15th of the following month. The TASER 7 or TASER 10 term will end upon completion of the associated TASER 7 or TASER 10 subscription in the Quote ("**Term**"). If the Quote has multiple TASER 7 or TASER 10 ship dates, each shipment will have a sixty- (60-) month term, starting on the shipment of TASER 7 or TASER 10 as described above.

2. **Payment**. Axon invoices upon shipment, or on the date specified within the invoicing plan in the Quote. Payment is due net thirty (30) days from the invoice date. Payment obligations are non-cancelable. Unless otherwise prohibited by law, Agency will pay interest on all past-due sums at the lower of one-and-a-half percent (1.5%) per month or the highest rate allowed by law. Agency will pay invoices without setoff, deduction, or withholding. If Axon sends a past due account to collections, Agency is responsible for collection and attorneys' fees.

3. **Taxes**. Agency is responsible for sales and other taxes associated with the order unless Agency provides Axon a valid tax exemption certificate.

4. **Shipping**. Axon may make partial shipments and ship any hardware provided by Axon under this Agreement ("**Axon Devices**") from multiple locations, including Axon-manufactured Devices, which are a subset of Axon Devices. All shipments are EXW (Incoterms 2020) via common carrier. Title and risk of loss pass to Agency upon Axon's delivery to the common carrier. Agency is responsible for any shipping charges in the Quote.

5. **Returns**. All sales are final. Axon does not allow refunds or exchanges, except warranty returns or as provided by state or federal law.

6. **Warranty**.

   6.1. **Limited Warranty; Disclaimer**. Axon warrants that Axon-manufactured Devices are free from defects in workmanship and materials for one (1) year from the date of Agency's receipt, except Signal Sidearm and Axon-manufactured accessories, which Axon warrants for thirty (30) months and ninety (90) days, respectively, from the date of Agency's receipt. Used conducted energy weapon ("**CEW**") cartridges are deemed to have operated properly. Extended warranties run from the expiration of the one- (1-) year hardware warranty through the extended warranty term. **All software and Axon Cloud Services are provided "AS IS," without any warranty of any kind, either express or implied, including without limitation the implied warranties of merchantability, fitness for a particular purpose and non-infringement. Axon Devices and Services that are not manufactured, published or performed by Axon ("Third-Party Products") are not covered by Axon's warranty and are only subject to the warranties of the third-party provider or manufacturer.**

   6.2. **Claims**. If Axon receives a valid warranty claim for an Axon-manufactured Device during the warranty term, Axon's sole responsibility is to repair or replace the Axon-manufactured Device with the same or like Axon-manufactured Device, at Axon's option. A replacement Axon-manufactured Device will be new or like new. Axon will warrant the replacement Axon-manufactured Device for the longer of (a) the remaining warranty of the original Axon-manufactured Device or (b) ninety (90) days from the date of repair or replacement.

      6.2.1. If Agency exchanges an Axon Device or part, the replacement item becomes Agency's property, and the replaced item becomes Axon's property. Before delivering an Axon-manufactured Device for service, Agency must upload Axon-manufactured Device data to Axon Evidence or download it and retain a copy. Axon is not responsible for any loss of software, data, or other information contained in storage media or any part of the Axon-manufactured Device sent to Axon for service.

   6.3. **Spare Axon Devices**. At Axon's reasonable discretion, Axon may provide Agency a predetermined number of spare Axon Devices as detailed in the Quote ("**Spare Axon Devices**"). Spare Axon Devices

Docusign Envelope ID: C8638121-10CD-42B7-A5A3-63C409255622

are intended to replace broken or non-functioning units while Agency submits the broken or non-functioning units, through Axon's warranty return process. Axon will repair or replace the unit with a replacement Axon Device. Title and risk of loss for all Spare Axon Devices shall pass to Agency in accordance with shipping terms under Section 5. Axon assumes no liability or obligation in the event Agency does not utilize Spare Axon Devices for the intended purpose.

6.4. **Limitations**. Axon's warranty excludes damage related to: (a) failure to follow Axon Device use instructions; (b) Axon Devices used with equipment not manufactured or recommended by Axon; (c) abuse, misuse, or intentional damage to Axon Device; (d) force majeure; (e) Axon Devices repaired or modified by persons other than Axon without Axon's written permission; or (f) Axon Devices with a defaced or removed serial number. Axon's warranty will be void if Agency resells Axon Devices.

6.4.1. **To the extent permitted by law, the above warranties and remedies are exclusive. Axon disclaims all other warranties, remedies, and conditions, whether oral, written, statutory, or implied. If statutory or implied warranties cannot be lawfully disclaimed, then such warranties are limited to the duration of the warranty described above and by the provisions in this Agreement. Agency confirms and agrees that, in deciding whether to sign this Agreement, it has not relied on any statement or representation by Axon or anyone acting on behalf of Axon related to the subject matter of this Agreement that is not in this Agreement.**

6.4.2. **Axon's cumulative liability to any Party for any loss or damage resulting from any claim, demand, or action arising out of or relating to any Axon Device or Service will not exceed the purchase price paid to Axon for the Axon Device, or if for Services, the amount paid for such Services over the twelve (12) months preceding the claim. Neither Party will be liable for direct, special, indirect, incidental, punitive or consequential damages, however caused, whether for breach of warranty or contract, negligence, strict liability, tort or any other legal theory.**

6.5. **Online Support Platforms**. Use of Axon's online support platforms (e.g., Axon Academy and MyAxon) is governed by the Axon Online Support Platforms Terms of Use Appendix available at www.axon.com/sales-terms-and-conditions.

6.6. **Third-Party Software and Services**. Use of software or services other than those provided by Axon is governed by the terms, if any, entered into between Agency and the respective third-party provider, including, without limitation, the terms applicable to such software or services located at www.axon.com/sales-terms-and-conditions, if any.

6.7. **Axon Aid**. Upon mutual agreement between Axon and Agency, Axon may provide certain products and services to Agency, as a charitable donation under the Axon Aid program. In such event, Agency expressly waives and releases any and all claims, now known or hereafter known, against Axon, and its officers, directors, employees, agents, contractors, affiliates, successors, and assigns (collectively, "**Releasees**"), including but not limited to, on account of injury, death, property damage, or loss of data, arising out of or attributable to the Axon Aid program whether arising out of the negligence of any Releasees or otherwise. Agency agrees not to make or bring any such claim against any Releasee, and forever release and discharge all Releasees from liability under such claims. Agency expressly allows Axon to publicly announce its participation in Axon Aid and use its name in marketing materials. Axon may terminate the Axon Aid program without cause immediately upon notice to the Agency.

7. **Axon Device Warnings**. See www.axon.com/legal for the most current Axon Device warnings.

8. **Design Changes**. Axon may make design changes to any Axon Device or Service without notifying Agency or making the same change to Axon Devices and Services previously purchased by Agency.

9. **Bundled Offerings**. Some offerings in bundled offerings may not be generally available at the time of Agency's purchase. Axon will not provide a refund, credit, or additional discount beyond what is in the Quote due to a delay of availability or Agency's election not to utilize any portion of an Axon bundle.

10. **Insurance**. Axon will maintain General Liability, Workers' Compensation, and Automobile Liability insurance. Upon request, Axon will supply certificates of insurance.

Docusign Envelope ID: C8638121-10CD-42B7-A5A3-63C409255622

11. **IP Rights**. Axon owns and reserves all right, title, and interest in Axon-manufactured Devices and Services and suggestions to Axon, including all related intellectual property rights. Agency will not cause any Axon proprietary rights to be violated.

12. **Agency Responsibilities**. Agency is responsible for (a) Agency's use of Axon Devices; (b) breach of this Agreement or violation of applicable law by Agency or an Agency end user; (c) disputes between Agency and a third-party over Agency's use of Axon Devices; (d) ensuring Axon Devices are destroyed and disposed of securely and sustainably at Agency's cost; and (e) any regulatory violations or fines, as a result of improper destruction or disposal of Axon Devices.

13. **Termination**.

    13.1. **For Breach**. A Party may terminate this Agreement for cause if it provides thirty (30) days written notice of the breach to the other Party, and the breach remains uncured at the end of thirty (30) days. If Agency terminates this Agreement due to Axon's uncured breach, Axon will refund prepaid amounts on a prorated basis based on the effective date of termination.

    13.2. **By Agency**. If sufficient funds are not appropriated or otherwise legally available to pay the fees, Agency may terminate this Agreement. Agency will deliver notice of termination under this section as soon as reasonably practicable.

    13.3. **Effect of Termination**. Upon termination of this Agreement, Agency rights immediately terminate. Agency remains responsible for all fees incurred before the effective date of termination. If Agency purchases Axon Devices for less than the manufacturer's suggested retail price ("**MSRP**") and this Agreement terminates before the end of the Term, Axon will invoice Agency the difference between the MSRP for Axon Devices received, including any Spare Axon Devices, and amounts paid towards those Axon Devices. Only if terminating for non-appropriation, Agency may return Axon Devices to Axon within thirty (30) days of termination. MSRP is the standalone price of the individual Axon Device at the time of sale. For bundled Axon Devices, MSRP is the standalone price of all individual components.

14. **General**.

    14.1. **Force Majeure**. Neither Party will be liable for any delay or failure to perform due to a cause beyond a Party's reasonable control.

    14.2. **Independent Contractors**. The Parties are independent contractors. Neither Party has the authority to bind the other. This Agreement does not create a partnership, franchise, joint venture, agency, fiduciary, or employment relationship between the Parties.

    14.3. **Third-Party Beneficiaries**. There are no third-party beneficiaries under this Agreement.

    14.4. **Non-Discrimination**. Neither Party nor its employees will discriminate against any person based on race; religion; creed; color; sex; gender identity and expression; pregnancy; childbirth; breastfeeding; medical conditions related to pregnancy, childbirth, or breastfeeding; sexual orientation; marital status; age; national origin; ancestry; genetic information; disability; veteran status; or any class protected by local, state, or federal law.

    14.5. **Export Compliance**. Each Party will comply with all import and export control laws and regulations.

    14.6. **Waiver**. No waiver or delay by either Party in exercising any right under this Agreement constitutes a waiver of that right.

    14.7. **Severability**. If a court of competent jurisdiction holds any portion of this Agreement invalid or unenforceable, the remaining portions of this Agreement will remain in effect.

    14.8. **Survival**. The following sections will survive termination: Payment, Warranty, Axon Device Warnings, Indemnification, IP Rights, and Agency Responsibilities.

    14.9. **Governing Law**. The laws of the state where Agency is physically located, without reference to conflict of law rules, govern this Agreement and any dispute arising from it. The United Nations Convention for the International Sale of Goods does not apply to this Agreement.

    14.10. **Notices**. All notices must be in English. Notices posted on Agency's Axon Evidence site are effective

Docusign Envelope ID: C8638121-10CD-42B7-A5A3-63C409255622

upon posting. Notices by email are effective on the sent date of the email. Notices by personal delivery are effective immediately. Notices to Agency shall be provided to the address on file with Axon. Notices to Axon shall be provided to Axon Enterprise, Inc. Attn: Legal, 17800 North 85th Street, Scottsdale, Arizona 85255 with a copy to legal@axon.com.

18.12 **Entire Agreement.** This Agreement, including the Appendices and any SOW(s), represents the entire agreement between the Parties. This Agreement supersedes all prior agreements or understandings, whether written or verbal, regarding the subject matter of this Agreement. This Agreement may only be modified or amended in a writing signed by the Parties.

Each representative identified below declares they have been expressly authorized to execute this Agreement as of the date of signature.

Axon Enterprise, Inc.	**Agency**
Signature: _____	Signature: _____
Name: _____	Name: _____
Title: _____	Title: _____
Date: _____	Date: _____

Docusign Envelope ID: C8638121-10CD-42B7-A5A3-63C409255622

TASER Energy Weapon Axon Evidence Terms of Use Appendix

1 **Definitions**.
"**Agency Content**" is data uploaded into, ingested by, or created in Axon Evidence within Agency's tenant, including media or multimedia uploaded into Axon Evidence by Agency. Agency Content includes Evidence but excludes Non-Content Data.

"**Evidence**" is media or multimedia uploaded into Axon Evidence as 'evidence' by an Agency. Evidence is a subset of Agency Content.

"**Non-Content Data**" is data, configuration, and usage information about Agency's Axon Evidence tenant, Axon Devices and client software, and users that is transmitted or generated when using Axon Devices. Non-Content Data includes data about users captured during account management and customer support activities. Non-Content Data does not include Agency Content.

2 **Subscription Term**. The TASER 7 or TASER 10 Axon Evidence Subscription Term begins on the Start Date.

3 **Access Rights**. Upon Axon granting Agency a TASER 7 or TASER 10 Axon Evidence subscription, Agency may access and use Axon Evidence for the storage and management of data from TASER 7 or TASER 10 CEW devices during the TASER 7 or TASER 10 Axon Evidence Subscription Term. Agency may not upload any non-TASER 7 or TASER 10 data or any other files to Axon Evidence. Agency may not exceed the number of end-users than the Quote specifies.

4 **Agency Owns Agency Content**. Agency controls and owns all right, title, and interest in Agency Content. Except as outlined herein, Axon obtains no interest in Agency Content, and Agency Content is not Axon's business records. Agency is solely responsible for uploading, sharing, managing, and deleting Agency Content. Axon will only have access to Agency Content for the limited purposes set forth herein. Agency agrees to allow Axon access to Agency Content to (a) perform troubleshooting, maintenance, or diagnostic screenings; and (b) enforce this Agreement or policies governing use of the Axon products.

5 **Security**. Axon will implement commercially reasonable and appropriate measures to secure Agency Content against accidental or unlawful loss, access, or disclosure. Axon will maintain a comprehensive information security program to protect Axon Evidence and Agency Content including logical, physical access, vulnerability, risk, and configuration management; incident monitoring and response; encryption of uploaded digital evidence; security education; and data protection. Axon agrees to the Federal Bureau of Investigation Criminal Justice Information Services Security Addendum.

6 **Agency Responsibilities**. Agency is responsible for (a) ensuring Agency users comply with this Agreement; (b) ensuring Agency owns Agency Content and no Agency Content or Agency end user's use of Agency Content or Axon Evidence violates this Agreement or applicable laws; and (c) maintaining necessary computer equipment and Internet connections for use of Axon Evidence. If Agency becomes aware of any violation of this Agreement by an end-user, Agency will immediately terminate that end user's access to Axon Evidence.

Agency is also responsible for maintaining the security of end-user names and passwords and taking steps to maintain appropriate security and access by end-users to Agency Content. Login credentials are for Agency internal use only and Agency may not sell, transfer, or sublicense them to any other entity or person. Agency may download the audit log at any time. Agency shall contact Axon immediately if an unauthorized third party may be using Agency's account or Agency Content or if account information is lost or stolen.

7 **Privacy.** Your use of Axon Cloud Services is subject to the Axon Cloud Services Privacy Policy, a current

Docusign Envelope ID: C8638121-10CD-42B7-A5A3-63C409255622

version of which is available at https://www.axon.com/legal/cloud-services-privacy-policy. Agency agrees to allow Axon access to Non-Content Data from Agency to (a) perform troubleshooting, maintenance, or diagnostic screenings; (b) provide, develop, improve, and support current and future Axon products and related services; and (c) enforce this Agreement or policies governing the use of Axon products.

8 **Storage.** Axon may place Agency Content that Agency has not viewed or accessed for six (6) months into archival storage. Agency Content in archival storage will not have immediate availability and may take up to twenty-four (24) hours to access.

9 **Location of Data Storage**. Axon may transfer Agency Content to third party subcontractors for storage. Axon will determine the locations of data centers where Agency Content will be stored. Axon will ensure all Agency Content stored in Axon Evidence remains within the country the Agency is located. Ownership of Agency Content remains with Agency.

10 **Suspension.** Axon may suspend Agency access or any end-user's right to access or use any portion or of Axon Evidence immediately upon notice, if:

10.1. The Termination provisions of the TASER 7 or TASER 10 Terms and Conditions apply;

10.2. Agency or an end-user's use of or registration for Axon Evidence (i) poses a security risk to Axon Evidence or any third party, (ii) may adversely impact Axon Evidence or the systems or content of any other customer, (iii) may subject Axon, Axon's affiliates, or any third party to liability, or (iv) may be fraudulent;

Agency remains responsible for all fees incurred through the date of suspension without any credits for any period of suspension. Axon will not delete any of Agency Content on Axon Evidence due to suspension, except as specified elsewhere in this Agreement.

11 **Axon Evidence Warranty**. Axon warrants that Axon Evidence will not infringe or misappropriate any patent, copyright, trademark, or trade secret rights of any third party. Axon disclaims any warranties or responsibility for data corruption or errors before the data is uploaded to Axon Evidence.

12 **Axon Evidence Restrictions**. All Axon Evidence subscriptions will immediately terminate if Agency does not comply with any term of this Agreement. Agency and Agency end-users (including employees, contractors, agents, officers, volunteers, and directors), may not, or may not attempt to:

12.1. copy, modify, tamper with, repair, or create derivative works of any part of Axon Evidence;

12.2. reverse engineer, disassemble, or decompile Axon Evidence or apply any other process to derive any source code included in Axon Evidence, or allow any others to do the same;

12.3. access or use Axon Evidence with the intent to gain unauthorized access, avoid incurring fees or exceeding usage limits or quotas;

12.4. use trade secret information contained in Axon Evidence, except as expressly permitted in this Agreement;

12.5. access Axon Evidence to build a competitive product or service or copy any features, functions, or graphics of Axon Evidence;

12.6. remove, alter, or obscure any confidentiality or proprietary rights notices (including copyright and trademark notices) of Axon's or Axon's licensors on or within Axon Evidence; or

12.7. use Axon Evidence to store or transmit infringing, libelous, or otherwise unlawful or tortious material, material in violation of third-party privacy rights, or malicious code.

13 **After Termination.** Axon will not delete Agency Content for ninety (90) days following termination. During these ninety (90) days, Agency may retrieve Agency Content only if all amounts due have been paid. There will be no application functionality of Axon Evidence during these ninety (90) days other than the ability to retrieve Agency Content. Agency will not incur any additional fees if Agency Content is downloaded from Axon Evidence during these ninety (90) days. Axon has no obligation to maintain or provide any Agency Content after these ninety (90) days and will thereafter, unless legally prohibited delete all of Agency Content stored in Axon Evidence. Upon request, Axon will provide written proof that all Agency Content has been successfully deleted and fully removed from Axon Evidence.

Docusign Envelope ID: C8638121-10CD-42B7-A5A3-63C409255622

14 **Post-Termination Assistance.** Axon will provide Agency with the same post-termination data retrieval assistance that Axon generally makes available to all customers. Requests for Axon to provide additional assistance in downloading or transferring Agency Content, including requests for Axon's Data Egress Services, will result in additional fees and Axon will not warrant or guarantee data integrity or readability in the external system.

15 **U.S. Government Rights**. If Agency is a U.S. Federal department or using Axon Evidence on behalf of U.S. Federal department, Axon Evidence is provided as a "commercial item," "commercial computer software," "commercial computer software documentation," and "technical data," as defined in the Federal Acquisition Regulation and Defense Federal Acquisition Regulation Supplement. If Agency is using Axon Evidence on behalf of the U.S. Government and these terms fail to meet the U.S. Government's needs or are inconsistent in any respect with federal law, Agency will immediately discontinue the use of Axon Evidence.

16 **Survival**. Upon any termination of this Agreement, the following sections will survive: Agency Owns Agency Content, Storage, Axon Evidence Warranty, and Axon Evidence Restrictions.

Docusign Envelope ID: C8638121-10CD-42B7-A5A3-63C409255622

Axon Customer Experience Improvement Program Appendix

1 **Axon Customer Experience Improvement Program (ACEIP)**. The ACEIP is designed to accelerate Axon's development of technology, such as building and supporting automated features, to ultimately increase safety within communities and drive efficiency in public safety. To this end, subject to the limitations on Axon as described below, Axon, where allowed by law, may make limited use of Agency Content from all of its customers, to provide, develop, improve, and support current and future Axon products (collectively, "**ACEIP Purposes**"). However, at all times, Axon will comply with its obligations pursuant to the Axon Cloud Services Terms of Use Appendix to maintain a comprehensive data security program (including compliance with the CJIS Security Policy for Criminal Justice Information), privacy program, and data governance policy, including high industry standards of de-identifying Personal Data, to enforce its security and privacy obligations for the ACEIP. ACEIP has 2 tiers of participation, Tier 1 and Tier 2. By default, Agency will be a participant in ACEIP Tier 1. If Agency does not want to participate in ACEIP Tier 1, Agency can revoke its consent at any time. If Agency wants to participate in Tier 2, as detailed below, Agency can check the ACEIP Tier 2 box below. If Agency does not want to participate in ACEIP Tier 2, Agency should leave box unchecked. At any time, Agency may revoke its consent to ACEIP Tier 1, Tier 2, or both Tiers.

1.1 ACEIP Tier 1.

1.1.1. When Axon uses Agency Content for the ACEIP Purposes, Axon will extract from Agency Content and may store separately copies of certain segments or elements of the Agency Content (collectively, "**ACEIP Content**"). When extracting ACEIP Content, Axon will use commercially reasonable efforts to aggregate, transform or de-identify Agency Content so that the extracted ACEIP Content is no longer reasonably capable of being associated with, or could reasonably be linked directly or indirectly to a particular individual ("**Privacy Preserving Technique(s)**"). For illustrative purposes, some examples are described in footnote 1[1]. For clarity, ACEIP Content will still be linked indirectly, with an attribution, to the Agency from which it was extracted. This attribution will be stored separately from the data itself, but is necessary for and will be solely used to enable Axon to identify and delete all ACEIP Content upon Agency request. Once de-identified, ACEIP Content may then be further modified, analyzed, and used to create derivative works. At any time, Agency may revoke the consent granted herein to Axon to access and use Agency Content for ACEIP Purposes. Within 30 days of receiving the Agency's request, Axon will no longer access or use Agency Content for ACEIP Purposes and will delete any and all ACEIP Content. Axon will also delete any derivative works which may reasonably be capable of being associated with, or could reasonably be linked directly or indirectly to Agency. In addition, if Axon uses Agency Content for the ACEIP Purposes, upon request, Axon will make available to Agency a list of the specific type of Agency Content being used to generate ACEIP Content, the purpose of such use, and the retention, privacy preserving extraction technique, and relevant data protection practices applicable to the Agency Content or ACEIP Content ("Use Case"). From time to time, Axon may develop and deploy new Use Cases. At least 30 days prior to authorizing the deployment of any new Use Case, Axon will provide Agency notice (by updating the list of Use Case at https://www.axon.com/aceip and providing Agency with a mechanism to obtain

[1] For example; (a) when extracting specific text to improve automated transcription capabilities, text that could be used to directly identify a particular individual would not be extracted, and extracted text would be disassociated from identifying metadata of any speakers, and the extracted text would be split into individual words and aggregated with other data sources (including publicly available data) to remove any reasonable ability to link any specific text directly or indirectly back to a particular individual; (b) when extracting license plate data to improve Automated License Plate Recognition (ALPR) capabilities, individual license plate characters would be extracted and disassociated from each other so a complete plate could not be reconstituted, and all association to other elements of the source video, such as the vehicle, location, time, and the surrounding environment would also be removed; (c) when extracting audio of potential acoustic events (such as glass breaking or gun shots), very short segments (<1 second) of audio that only contains the likely acoustic events would be extracted and all human utterances would be removed.

Docusign Envelope ID: C8638121-10CD-42B7-A5A3-63C409255622

notice of that update or another commercially reasonable method to Agency designated contact) ("**New Use Case**").

1.1.2. **Expiration of ACEIP Tier 1**. Agency consent granted herein, will expire upon termination of the Agreement. In accordance with section 1.1.1, within 30 days of receiving the Agency's request, Axon will no longer access or use Agency Content for ACEIP Purposes and will delete ACEIP Content. Axon will also delete any derivative works which may reasonably be capable of being associated with, or could reasonably be linked directly or indirectly to Agency.

1.2 **ACEIP Tier 2**. In addition to ACEIP Tier 1, if Agency wants to help further improve Axon's services, Agency may choose to participate in Tier 2 of the ACEIP. ACEIP Tier 2, grants Axon certain additional rights to use Agency Content, in addition to those set forth in Tier 1 above, without the guaranteed deployment of a Privacy Preserving Technique to enable product development, improvement, and support that cannot be accomplished with aggregated, transformed or de-identified data.

☐ Check this box if Agency wants to help further improve Axon's services by participating in ACEIP Tier 2 in addition to Tier 1. By checking this box, Agency hereby agrees to the Axon Customer Experience Improvement Program Tier 2 Terms of Service, available at https://www.axon.com/sales-terms-and-conditions and incorporated herein by reference.

Docusign Envelope ID: C8638121-10CD-42B7-A5A3-63C409255622

Professional Services Appendix

If any of the professional services specified below are included on the Quote, this Appendix applies.

1 **Utilization of Services**. Agency must use pre-paid professional services as outlined in the Quote and this Appendix within six (6) months of the Effective Date.

2 **CEW Services Packages**. CEW Services Packages are detailed below:

System set up and configuration • Configure Axon Evidence categories & custom roles based on Agency need. • Troubleshoot IT issues with Axon Evidence. • Register users and assign roles in Axon Evidence. • **For the CEW Full Service Package**: On-site assistance included • **For the CEW Starter Package:** Virtual assistance included
Dedicated Project Manager Assignment of specific Axon representative for all aspects of planning the rollout (Project Manager). Ideally, Project Manager will be assigned to Agency 4–6 weeks before rollout
Best practice implementation planning session to: • Provide considerations for the establishment of CEW policy and system operations best practices based on Axon's observations with other agencies • Discuss the importance of entering metadata and best practices for digital data management • Provide referrals to other agencies using TASER CEWs and Axon Evidence • **For the CEW Full Service Package:** On-site assistance included • **For the CEW Starter Package:** Virtual assistance included
System Admin and troubleshooting training sessions On-site sessions providing a step-by-step explanation and assistance for Agency's configuration of security, roles & permissions, categories & retention, and other specific settings for Axon Evidence
Axon Evidence Instructor training • Provide training on the Axon Evidence to educate instructors who can support Agency's subsequent Axon Evidence training needs. • **For the CEW Full Service Package:** Training for up to 3 individuals at Agency • **For the CEW Starter Package:** Training for up to 1 individual at Agency
TASER CEW inspection and device assignment Axon's on-site professional services team will perform functions check on all new TASER CEW Smart weapons and assign them to a user on Axon Evidence.
Post go-live review **For the CEW Full Service Package**: On-site assistance included. **For the CEW Starter Package**: Virtual assistance included.

3 **Smart Weapon Transition Service**. The Smart Weapon Transition Service includes:

Archival of CEW Firing Logs Axon's on-site professional services team will upload CEW firing logs to Axon Evidence from all TASER CEW Smart Weapons that Agency is replacing with newer Smart Weapon models.
Return of Old Weapons Axon's on-site professional service team will ship all old weapons back to Axon's headquarters. Axon will provide Agency with a Certificate of Destruction

*Note: CEW Full Service packages for TASER 7 or TASER 10 include Smart Weapon Transition Service instead of 1-Day Device Specific Instructor Course.

4 **VR Services Package.** VR Service includes advance remote project planning and configuration support and one (1) day of on-site service and a professional services manager to work with Agency to assess Agency's deployment and determine which Services are appropriate. The VR Service

Docusign Envelope ID: C8638121-10CD-42B7-A5A3-63C409255622

training options include:

System set up and configuration (Remote Support) • Instructor-led setup of Axon VR headset content • Configure agency settings based on Agency need • Troubleshoot IT issues with Axon VR headset
Axon instructor training (Train the Trainer) Training for up to five (5) Agency's in-house instructors who can support Agency's Axon VR CET and SIM training needs after Axon's has fulfilled its contracted on-site obligations
Classroom and practical training sessions Step-by-step explanation and assistance for Agency's configuration of Axon VR CET and SIM functionality, basic operation, and best practices

5 **Axon Air, On-Site Training.** Axon Air, On-Site training includes advance remote project planning and configuration support and one (1) day of on-site Services and a professional services manager to work closely with Agency to assess Agency's deployment and determine which Services are appropriate. If Agency requires more than one (1) day of on-site Services, Agency must purchase additional on-site Services. The Axon Air, On-Site training options include:

System set up and configuration (Remote Support) • Instructor-led setup of Axon Air App (ASDS) • Configure agency settings based on Agency need • Configure drone controller • Troubleshoot IT issues with Axon Evidence
Axon instructor training (Train the Trainer) Training for Agency's in-house instructors who can support Agency's Axon Air and Axon Evidence training needs after Axon's has fulfilled its contracted on-site obligations
Classroom and practical training sessions Step-by-step explanation and assistance for Agency's configuration of Axon Respond+ livestreaming functionality, basic operation, and best practices

6 **Axon Air, Virtual Training.** Axon Air, Virtual training includes all items in the Axon Air, On-Site Training Package, except the practical training session, with the Axon Instructor training for up to four hours virtually.

7 **Signal Sidearm Installation Service.**

7.1. **Purchases of 50 SSA units or more:** Axon will provide one day of on-site service and one professional services manager and will provide train the trainer instruction, with direct assistance on the first of each unique holster/mounting type. Agency is responsible for providing a suitable work/training area.

7.2. **Purchases of less than 50 SSA units:** Axon will provide a 1-hour virtual instruction session on the basics of installation and device calibration.

8 **Out of Scope Services**. Axon is only responsible to perform the professional services described in the Quote and this Appendix. Any additional professional services are out of scope. The Parties must document scope changes in a written and signed change order. Changes may require an equitable adjustment in the charges or schedule.

9 **Delivery of Services**. Axon personnel will work Monday through Friday, 8:30 a.m. to 5:30 p.m., except holidays. Axon will perform all on-site tasks over a consecutive timeframe. Axon will not charge Agency travel time by Axon personnel to Agency premises as work hours.

10 **Access Computer Systems to Perform Services**. Agency authorizes Axon to access relevant Agency computers and networks, solely for performing the Services. Axon will work to identify as soon as reasonably practicable resources and information Axon expects to use and will provide an initial itemized

Docusign Envelope ID: C8638121-10CD-42B7-A5A3-63C409255622

list to Agency. Agency is responsible for and assumes the risk of any problems, delays, losses, claims, or expenses resulting from the content, accuracy, completeness, and consistency of all data, materials, and information supplied by Agency.

11 **Site Preparation**. Axon will provide a hardcopy or digital copy of current user documentation for the Devices ("**User Documentation**"). User Documentation will include all required environmental specifications for the professional services and Devices to operate per the Device User Documentation. Before installation of Devices (whether performed by Agency or Axon), Agency must prepare the location(s) where Devices are to be installed ("**Installation Site**") per the environmental specifications in the Device User Documentation. Following installation, Agency must maintain the Installation Site per the environmental specifications. If Axon modifies Device User Documentation for any Devices under this Agreement, Axon will provide the update to Agency when Axon generally releases it.

12 **Acceptance**. When Axon completes professional services, Axon will present an acceptance form ("**Acceptance Form**") to Agency. Agency will sign the Acceptance Form acknowledging completion. If Agency reasonably believes Axon did not complete the professional services in substantial conformance with this Agreement, Agency must notify Axon in writing of the specific reasons for rejection within seven (7) calendar days from delivery of the Acceptance Form. Axon will address the issues and re-present the Acceptance Form for signature. If Axon does not receive the signed Acceptance Form or written notification of reasons for rejection within seven (7) calendar days of delivery of the Acceptance Form, Axon will deem Agency to have accepted the professional services.

13 **Agency Network**. For work performed by Axon transiting or making use of Agency's network, Agency is solely responsible for maintenance and functionality of the network. In no event will Axon be liable for loss, damage, or corruption of Agency's network from any cause.

Docusign Envelope ID: C8638121-10CD-42B7-A5A3-63C409255622

TASER 7 Appendix

This TASER 7 Appendix applies to Agency's TASER 7, OSP 7, or OSP 7 Plus purchase from Axon, if applicable.

1. **Duty Cartridge Replenishment Plan**. If the Quote includes "**Duty Cartridge Replenishment Plan**", Agency must purchase the plan for each CEW user. A CEW user includes officers that use a CEW in the line of duty and those that only use a CEW for training. Agency may not resell cartridges received. Axon will only replace cartridges used in the line of duty.

2. **Training**. If the Quote includes a training voucher, Agency must use the voucher within one (1) year of issuance, or the voucher will be void. Axon will issue Agency a voucher annually beginning on the start of the TASER Subscription Term. The voucher has no cash value. Agency cannot exchange it for another device or service. Unless stated in the Quote, the voucher does not include travel expenses and will be Agency's responsibility. If the Quote includes Axon Online Training or Virtual Reality Content Empathy Development for Autism/Schizophrenia (collectively, "**Training Content**"), Agency may access Training Content. Axon will deliver all Training Content electronically.

3. **TASER Upgrade**. If Agency purchases Axon's 10-year certification program for Axon's latest version of its TASER energy weapon ("Certification Program") and has no outstanding payment obligations as of the beginning of the sixth (6th) year of the Certification Program, Agency will qualify for an upgrade to any subsequent version of the Certification Program ("CEW Upgrade"). Agency will receive the CEW Upgrade at no additional cost, only to the extent such subsequent version of the Certification Program includes the same products or features as the Certification Program purchased by Agency. If Agency wants to upgrade to a Certification Program that includes additional products or features, Agency will pay the additional cost associated with such products and features. For the avoidance of doubt, Agency is not required to upgrade to any subsequent version of the Certification Program. Axon may ship the CEW Upgrade as scheduled in the Quote without prior confirmation from agency unless the Parties agree in writing otherwise at least ninety (90) days in advance. If necessary to maintain compatibility among Axon Devices, within thirty (30) days of receiving the CEW Upgrade, Agency must, if requested by Axon, return all hardware and related accessories received in connection with the Certification Program to Axon. In such event, Agency must ship batteries via ground shipping or in accordance with federal regulations in place at the time of the return. Axon will pay shipping costs for the return if Agency uses Axon's RMA process.

4. **Extended Warranty**. If the Quote includes an extended warranty, the extended warranty coverage period warranty will be for a five- (5-) year term, which includes the hardware manufacturer's warranty plus the four- (4-) year extended term.

5. **Trade-in**. If the Quote contains a discount on CEW-related line items, including items related to OSP, then that discount may only be applied as a trade-in credit, and Agency must return used hardware and accessories associated with the discount ("**Trade-In Units**") to Axon. Agency must ship batteries via ground shipping. Axon will pay shipping costs of the return. If Axon does not receive Trade-In Units within the timeframe below, Axon will invoice Agency the value of the trade-in credit. Agency may not destroy Trade-In Units and receive a trade-in credit.

Agency Size	Days to Return from Start Date of TASER 7 Subscription
Less than 100 officers	30 days
100 to 499 officers	90 days
500+ officers	180 days

6. **TASER 7 Subscription Term**. The TASER 7 Subscription Term for a standalone TASER 7 purchase begins on shipment of the TASER 7 hardware. The TASER 7 Subscription Term for OSP 7 begins on the OSP 7 Start Date.

7. **Access Rights**. Upon Axon granting Agency a TASER 7 Axon Evidence subscription, Agency may access and use Axon Evidence for the storage and management of data from TASER 7 CEW devices during the TASER 7 Subscription Term. Agency may not exceed the number of end users the Quote specifies.

8. **Privacy.** Axon will not disclose Agency Content or any information about Agency except as compelled by a court or administrative body or required by any law or regulation. Axon will give notice if any disclosure

Docusign Envelope ID: C8638121-10CD-42B7-A5A3-63C409255622

request is received for Agency Content, so Agency may file an objection with the court or administrative body.

9. **Termination**. If payment for TASER 7 is more than thirty (30) days past due, Axon may terminate Agency's TASER 7 plan by notifying Agency. Upon termination for any reason, then as of the date of termination:

   9.1. TASER 7 extended warranties and access to Training Content will terminate. No refunds will be given.

   9.2. Axon will invoice Agency the remaining MSRP for TASER 7 products received before termination. If terminating for non-appropriations, Axon will not invoice Agency if Agency returns the CEW, rechargeable battery, holster, dock, core, training suits, and unused cartridges to Axon within thirty (30) days of the date of termination.

   9.3. Agency will be responsible for payment of any missed payments due to the termination before being allowed to purchase any future TASER 7 plan.

Docusign Envelope ID: C8638121-10CD-42B7-A5A3-63C409255622

TASER 10 Appendix

This TASER 10 Appendix applies to Agency's TASER 10, OSP 10, OSP Plus, or OSP 10 Plus Premium purchase from Axon, if applicable.

1. **Duty Cartridge Replenishment Plan**. If the Quote includes "**Duty Cartridge Replenishment Plan**", Agency must purchase the plan for each CEW user. A CEW user includes officers that use a CEW in the line of duty and those that only use a CEW for training. Agency may not resell cartridges received. Axon will only replace cartridges used in the line of duty.
2. **Training.** If the Quote includes a training voucher, Agency must use the voucher within one (1) year of issuance, or the voucher will be void. Axon will issue Agency a voucher annually beginning on the start of the TASER Subscription Term. The voucher has no cash value. Agency cannot exchange it for another device or service. Unless stated in the Quote, the voucher does not include travel expenses and will be Agency's responsibility. If the Quote includes Axon Online Training or Virtual Reality Content Empathy Development for Autism/Schizophrenia (collectively, "**Training Content**"), Agency may access Training Content. Axon will deliver all Training Content electronically.
3. **Extended Warranty**. If the Quote includes an extended warranty, the extended warranty coverage period warranty will be for a five- (5-) year term, which includes the hardware manufacturer's warranty plus the four- (4-) year extended term.
4. **Trade-in**. If the Quote contains a discount on CEW-related line items, including items related to OSP, then that discount may only be applied as a trade-in credit, and Agency must return used hardware and accessories associated with the discount ("**Trade-In Units**") to Axon. Agency must ship batteries via ground shipping. Axon will pay shipping costs of the return. If Axon does not receive Trade-In Units within the timeframe below, Axon will invoice Agency the value of the trade-in credit. Agency may not destroy Trade-In Units and receive a trade-in credit.

Agency Size	Days to Return from Start Date of TASER 10 Subscription
Less than 100 officers	60 days
100 to 499 officers	90 days
500+ officers	180 days

5. **TASER 10 Subscription Term**. The TASER 10 Subscription Term for a standalone TASER 10 purchase begins on shipment of the TASER 10 hardware. The TASER 10 Subscription Term for OSP 10 begins on the OSP 10 Start Date.
6. **Access Rights**. Upon Axon granting Agency a TASER 10 Axon Evidence subscription, Agency may access and use Axon Evidence for the storage and management of data from TASER 10 CEW devices during the TASER 10 Subscription Term. Agency may not exceed the number of end users the Quote specifies.
7. **Agency Warranty.** Agency warrants and acknowledges that TASER 10 is classified as a firearm and is being acquired for official Agency use pursuant to a law enforcement agency transfer under the Gun Control Act of 1968.
8. **Purchase Order.** To comply with applicable laws and regulations, Customer must provide a purchase order to Axon prior to shipment of TASER 10.
9. **Apollo Grant (US only).** If Agency has received an Apollo Grant from Axon, Agency must pay all fees in the Quote prior to upgrading to any new TASER CEW offered by Axon.

Docusign Envelope ID: C8638121-10CD-42B7-A5A3-63C409255622

Axon Virtual Reality Content Terms of Use Appendix

1 **Term**. The Quote will detail the duration of the Virtual Reality Content license.

2 **Headsets**. Agency may purchase additional virtual reality headsets from Axon. In the event Agency decides to purchase additional virtual reality headsets for use with Axon's Virtual Reality Content, Agency must purchase those headsets from Axon.

3 **License Restrictions**. All licenses will immediately terminate if Agency does not comply with any term of this Agreement. If Agency utilizes more users than stated in this Agreement, Agency must purchase additional Virtual Reality Content licenses from Axon. Agency may not use Virtual Reality Content for any purpose other than as expressly permitted by this Agreement. Agency may not:

- **3.1** modify, tamper with, repair, or otherwise create derivative works of Virtual Reality Content;
- **3.2** reverse engineer, disassemble, or decompile Virtual Reality Content or apply any process to derive the source code of Virtual Reality Content, or allow others to do the same;
- **3.3** copy Virtual Reality Content in whole or part, except as expressly permitted in this Agreement;
- **3.4** use trade secret information contained in Virtual Reality Content;
- **3.5** resell, rent, loan or sublicense Virtual Reality Content;
- **3.6** access Virtual Reality Content to build a competitive device or service or copy any features, functions, or graphics of Virtual Reality Content; or
- **3.7** remove, alter, or obscure any confidentiality or proprietary rights notices (including copyright and trademark notices) of Axon or Axon's licensors on or within Virtual Reality Content or any copies of Virtual Reality Content.

4 **Privacy**. Agency's use of the Virtual Reality Media is subject to the Axon Virtual Reality Privacy Policy, a current version of which is available at https://www.axon.com/legal/axon-virtual-reality-privacy-policy.

5 **Termination**. Axon may terminate Agency's license immediately for Agency's failure to comply with any of the terms in this Agreement.

EXHIBIT B
TO
COOPERATIVE CONTRACT PURCHASE ADDENDUM
CONTRACT NO. 2025256

[Fee Schedule]

See following page(s).

Axon Enterprise, Inc.
17800 N 85th St.
Scottsdale, Arizona 85255
United States
VAT: 86-0741227
Domestic: (800) 978-2737
International: +1.800.978.2737

Q-622210-45600.719TR

Issued: 11/04/2024

Quote Expiration: 12/31/2024

Estimated Contract Start Date: 04/01/2025

Account Number: 105710

Payment Terms: N30

Delivery Method:

SHIP TO	BILL TO
Buckeye Police Dept. - AZ 100 N Apache Rd Buckeye, AZ 85326-9699 USA	Buckeye Police Dept. - AZ 100 N Apache Rd Buckeye AZ 85326-9699 USA Email:

SALES REPRESENTATIVE	PRIMARY CONTACT
Tom Richardson Phone: +1 3012045323 Email: trichardson@axon.com Fax:	Karlie Conger Phone: 623-349-6435 Email: kconger@buckeyeaz.gov Fax:

Quote Summary

Program Length	60 Months
TOTAL COST	$724,992.00
ESTIMATED TOTAL W/ TAX	$778,864.34

Discount Summary

Average Savings Per Year	$39,850.00
TOTAL SAVINGS	$199,250.00

Payment Summary

Date	Subtotal	Tax	Total
Mar 2025	$144,998.40	$10,774.52	$155,772.92
Mar 2026	$144,998.40	$10,774.52	$155,772.92
Mar 2027	$144,998.40	$10,774.52	$155,772.92
Mar 2028	$144,998.40	$10,774.52	$155,772.92
Mar 2029	$144,998.40	$10,774.26	$155,772.66
Total	**$724,992.00**	**$53,872.34**	**$778,864.34**

Quote Unbundled Price:	**$924,242.00**
Quote List Price:	**$800,690.00**
Quote Subtotal:	**$724,992.00**

Pricing

All deliverables are detailed in Delivery Schedules section lower in proposal

Item	Description	Qty	Term	Unbundled	List Price	Net Price	Subtotal	Tax	Total
Program									
C00010	BUNDLE - TASER 10 CERTIFICATION	160	60	$94.11	$81.24	$75.52	$724,992.00	$53,872.34	$778,864.34
A la Carte Services									
85147	AXON TASER - PSO - STARTER	1			$14,000.00	$0.00	$0.00	$0.00	$0.00
85149	AXON TASER - 2 DAY PRODUCT SPECIFIC INSTRUCTOR COURSE	1			$6,786.00	$0.00	$0.00	$0.00	$0.00
Total							**$724,992.00**	**$53,872.34**	**$778,864.34**

Delivery Schedule

Hardware

Bundle	Item	Description	QTY	Shipping Location	Estimated Delivery Date
BUNDLE - TASER 10 CERTIFICATION	100390	AXON TASER 10 - HANDLE - YELLOW CLASS 3R	5	2	03/01/2025
BUNDLE - TASER 10 CERTIFICATION	100390	AXON TASER 10 - HANDLE - YELLOW CLASS 3R	160	2	03/01/2025
BUNDLE - TASER 10 CERTIFICATION	100393	AXON TASER 10 - MAGAZINE - LIVE DUTY BLACK	160	1	03/01/2025
BUNDLE - TASER 10 CERTIFICATION	100393	AXON TASER 10 - MAGAZINE - LIVE DUTY BLACK	5	1	03/01/2025
BUNDLE - TASER 10 CERTIFICATION	100394	AXON TASER 10 - MAGAZINE - HALT TRAINING BLUE	12	1	03/01/2025
BUNDLE - TASER 10 CERTIFICATION	100395	AXON TASER 10 - MAGAZINE - LIVE TRAINING PURPLE	9	1	03/01/2025
BUNDLE - TASER 10 CERTIFICATION	100396	AXON TASER 10 - MAGAZINE - INERT RED	30	1	03/01/2025
BUNDLE - TASER 10 CERTIFICATION	100399	AXON TASER 10 - CARTRIDGE - LIVE	3200	1	03/01/2025
BUNDLE - TASER 10 CERTIFICATION	100400	AXON TASER 10 - CARTRIDGE - HALT	960	1	03/01/2025
BUNDLE - TASER 10 CERTIFICATION	100401	AXON TASER 10 - CARTRIDGE - INERT	300	1	03/01/2025
BUNDLE - TASER 10 CERTIFICATION	100616	AXON TASER 10 - HOLSTER - BLACKHAWK - RH	128	1	03/01/2025
BUNDLE - TASER 10 CERTIFICATION	100617	AXON TASER 10 - HOLSTER - BLACKHAWK - LH	32	1	03/01/2025
BUNDLE - TASER 10 CERTIFICATION	100623	AXON TASER - TRAINING - ENHANCED HALT SUIT V2	4	1	03/01/2025
BUNDLE - TASER 10 CERTIFICATION	20018	AXON TASER - BATTERY PACK - TACTICAL	28	1	03/01/2025
BUNDLE - TASER 10 CERTIFICATION	20018	AXON TASER - BATTERY PACK - TACTICAL	160	1	03/01/2025
BUNDLE - TASER 10 CERTIFICATION	20018	AXON TASER - BATTERY PACK - TACTICAL	5	1	03/01/2025
BUNDLE - TASER 10 CERTIFICATION	70033	AXON - DOCK WALL MOUNT - BRACKET ASSY	2	1	03/01/2025
BUNDLE - TASER 10 CERTIFICATION	71019	AXON BODY - DOCK POWERCORD - NORTH AMERICA	2	1	03/01/2025
BUNDLE - TASER 10 CERTIFICATION	74200	AXON TASER - DOCK - SIX BAY PLUS CORE	2	1	03/01/2025
BUNDLE - TASER 10 CERTIFICATION	80087	AXON TASER - TARGET - CONDUCTIVE PROFESSIONAL RUGGEDIZED	3	1	03/01/2025
BUNDLE - TASER 10 CERTIFICATION	80090	AXON TASER - TARGET FRAME - PROFESSIONAL 27.5 IN X 75 IN	3	1	03/01/2025
BUNDLE - TASER 10 CERTIFICATION	100399	AXON TASER 10 - CARTRIDGE - LIVE	480	1	03/01/2026
BUNDLE - TASER 10 CERTIFICATION	100400	AXON TASER 10 - CARTRIDGE - HALT	1280	1	03/01/2026
BUNDLE - TASER 10 CERTIFICATION	100399	AXON TASER 10 - CARTRIDGE - LIVE	480	1	03/01/2027
BUNDLE - TASER 10 CERTIFICATION	100400	AXON TASER 10 - CARTRIDGE - HALT	1280	1	03/01/2027

Hardware

Bundle	Item	Description	QTY	Shipping Location	Estimated Delivery Date
BUNDLE - TASER 10 CERTIFICATION	100399	AXON TASER 10 - CARTRIDGE - LIVE	480	1	03/01/2028
BUNDLE - TASER 10 CERTIFICATION	100400	AXON TASER 10 - CARTRIDGE - HALT	1280	1	03/01/2028
BUNDLE - TASER 10 CERTIFICATION	100399	AXON TASER 10 - CARTRIDGE - LIVE	480	1	03/01/2029
BUNDLE - TASER 10 CERTIFICATION	100400	AXON TASER 10 - CARTRIDGE - HALT	1280	1	03/01/2029

Software

Bundle	Item	Description	QTY	Estimated Start Date	Estimated End Date
BUNDLE - TASER 10 CERTIFICATION	101180	AXON TASER - DATA SCIENCE PROGRAM	160	04/01/2025	03/31/2030
BUNDLE - TASER 10 CERTIFICATION	20248	AXON TASER - EVIDENCE.COM LICENSE	160	04/01/2025	03/31/2030
BUNDLE - TASER 10 CERTIFICATION	20248	AXON TASER - EVIDENCE.COM LICENSE	2	04/01/2025	03/31/2030

Services

Bundle	Item	Description	QTY
BUNDLE - TASER 10 CERTIFICATION	100751	AXON TASER 10 - REPLACEMENT ACCESS PROGRAM - DUTY CARTRIDGE	160
BUNDLE - TASER 10 CERTIFICATION	101193	AXON TASER - ON DEMAND CERTIFICATION	1
A la Carte	85147	AXON TASER - PSO - STARTER	1
A la Carte	85149	AXON TASER - 2 DAY PRODUCT SPECIFIC INSTRUCTOR COURSE	1

Warranties

Bundle	Item	Description	QTY	Estimated Start Date	Estimated End Date
BUNDLE - TASER 10 CERTIFICATION	100704	AXON TASER 10 - EXT WARRANTY - HANDLE	160	03/01/2026	03/31/2030
BUNDLE - TASER 10 CERTIFICATION	100704	AXON TASER 10 - EXT WARRANTY - HANDLE	5	03/01/2026	03/31/2030
BUNDLE - TASER 10 CERTIFICATION	80374	AXON TASER - EXT WARRANTY - BATTERY PACK T7/T10	160	03/01/2026	03/31/2030
BUNDLE - TASER 10 CERTIFICATION	80374	AXON TASER - EXT WARRANTY - BATTERY PACK T7/T10	5	03/01/2026	03/31/2030
BUNDLE - TASER 10 CERTIFICATION	80374	AXON TASER - EXT WARRANTY - BATTERY PACK T7/T10	28	03/01/2026	03/31/2030
BUNDLE - TASER 10 CERTIFICATION	80396	AXON TASER - EXT WARRANTY - DOCK SIX BAY T7/T10	2	03/01/2026	03/31/2030

Shipping Locations

Location Number	Street	City	State	Zip	Country
1	100 N Apache Rd	Buckeye	AZ	85326-9699	USA
2	100 N Apache Rd	Buckeye	AZ	85326-9699	USA

Payment Details

Mar 2025

Invoice Plan	Item	Description	Qty	Subtotal	Tax	Total
Year 1	85147	AXON TASER - PSO - STARTER	1	$0.00	$0.00	$0.00
Year 1	85149	AXON TASER - 2 DAY PRODUCT SPECIFIC INSTRUCTOR COURSE	1	$0.00	$0.00	$0.00
Year 1	C00010	BUNDLE - TASER 10 CERTIFICATION	160	$144,998.40	$10,774.52	$155,772.92
Total				**$144,998.40**	**$10,774.52**	**$155,772.92**

Mar 2026

Invoice Plan	Item	Description	Qty	Subtotal	Tax	Total
Year 2	85147	AXON TASER - PSO - STARTER	1	$0.00	$0.00	$0.00
Year 2	85149	AXON TASER - 2 DAY PRODUCT SPECIFIC INSTRUCTOR COURSE	1	$0.00	$0.00	$0.00
Year 2	C00010	BUNDLE - TASER 10 CERTIFICATION	160	$144,998.40	$10,774.52	$155,772.92
Total				**$144,998.40**	**$10,774.52**	**$155,772.92**

Mar 2027

Invoice Plan	Item	Description	Qty	Subtotal	Tax	Total
Year 3	85147	AXON TASER - PSO - STARTER	1	$0.00	$0.00	$0.00
Year 3	85149	AXON TASER - 2 DAY PRODUCT SPECIFIC INSTRUCTOR COURSE	1	$0.00	$0.00	$0.00
Year 3	C00010	BUNDLE - TASER 10 CERTIFICATION	160	$144,998.40	$10,774.52	$155,772.92
Total				**$144,998.40**	**$10,774.52**	**$155,772.92**

Mar 2028

Invoice Plan	Item	Description	Qty	Subtotal	Tax	Total
Year 4	85147	AXON TASER - PSO - STARTER	1	$0.00	$0.00	$0.00
Year 4	85149	AXON TASER - 2 DAY PRODUCT SPECIFIC INSTRUCTOR COURSE	1	$0.00	$0.00	$0.00
Year 4	C00010	BUNDLE - TASER 10 CERTIFICATION	160	$144,998.40	$10,774.52	$155,772.92
Total				**$144,998.40**	**$10,774.52**	**$155,772.92**

Mar 2029

Invoice Plan	Item	Description	Qty	Subtotal	Tax	Total
Year 5	85147	AXON TASER - PSO - STARTER	1	$0.00	$0.00	$0.00
Year 5	85149	AXON TASER - 2 DAY PRODUCT SPECIFIC INSTRUCTOR COURSE	1	$0.00	$0.00	$0.00
Year 5	C00010	BUNDLE - TASER 10 CERTIFICATION	160	$144,998.40	$10,774.26	$155,772.66
Total				**$144,998.40**	**$10,774.26**	**$155,772.66**

Tax is estimated based on rates applicable at date of quote and subject to change at time of invoicing. If a tax exemption certificate should be applied, please submit prior to invoicing.

Contract Sourcewell CEW Contract #092722-AXN is incorporated by reference into the terms and conditions of this Agreement. In the event of conflict the terms of Axon's Master Services and Purchasing Agreement shall govern.

Standard Terms and Conditions

Axon Enterprise Inc. Sales Terms and Conditions

Axon Master Services and Purchasing Agreement:

This Quote is limited to and conditional upon your acceptance of the provisions set forth herein and Axon's Master Services and Purchasing Agreement (posted at https://www.axon.com/sales-terms-and-conditions), as well as the attached Statement of Work (SOW) for Axon Fleet and/or Axon Interview Room purchase, if applicable. In the event you and Axon have entered into a prior agreement to govern all future purchases, that agreement shall govern to the extent it includes the products and services being purchased and does not conflict with the Axon Customer Experience Improvement Program Appendix as described below.

ACEIP:

The Axon Customer Experience Improvement Program Appendix, which includes the sharing of de-identified segments of Agency Content with Axon to develop new products and improve your product experience (posted at www.axon.com/legal/sales-terms-and-conditions), is incorporated herein by reference. By signing below, you agree to the terms of the Axon Customer Experience Improvement Program.

Acceptance of Terms:

Any purchase order issued in response to this Quote is subject solely to the above referenced terms and conditions. By signing below, you represent that you are lawfully able to enter into contracts. If you are signing on behalf of an entity (including but not limited to the company, municipality, or government agency for whom you work), you represent to Axon that you have legal authority to bind that entity. If you do not have this authority, please do not sign this Quote.

Signature

Date Signed

11/4/2024



CITY OF BUCKEYE
Regular Council Meeting
COUNCIL ACTION REPORT

MEETING DATE: 12/17/24	**AGENDA ITEM:** 4.B. PD - Police Department - AXON Contract Change Order
DATE PREPARED: 12/17/24	**DISTRICT NO.:**
STAFF LIAISON: Robert Sanders, Chief of Police, rsanders@buckeyeaz.gov, (623) 349-6430	
DEPARTMENT: Police	**AGENDA ITEM TYPE:** Consent Agenda Items / New Business

ACTION/MOTION: (This language identifies the formal motion to be made by the Council)
Council to take action on approving the Second Amendment to the Cooperative Purchase Agreement between the City of Buckeye and Axon Enterprise, Inc., relating to the retention and acquisition of new body cameras and Tasers along with enhanced training applications; and authorizing the City Manager to execute and deliver said Second Amendment.

SUMMARY

PROJECT DESCRIPTION:
PD would like to modify the current contract with AXON to maintain the current number of body cameras, TASERS and associated equipment for positions approved for the 2025 fiscal year. Additionally, software updates for redaction, refreshed body cameras, and software subscriptions will be included as part of the contract modification.

BENEFITS:
Retaining access to AXON products enhances the PD's ability to perform its job safely, efficiently and within the requirements of the law.

FUTURE ACTION:
No future action is required at this time.

FINANCIAL IMPACT STATEMENT:
Contract will be amending the not to exceed amount from $1,137,245.60 to $1,517,885.60.

CURRENT FISCAL YEAR TOTAL COST:
$435,000

BUDGETED:
Yes

FISCAL YEAR:
2025

Items related to a project or facility location must include an attached vicinity map for Council Review.
ATTACHMENTS:
contract No. 2020012.pdf

COOPERATIVE CONTRACT PURCHASE ADDENDUM (CCPA)
BETWEEN
THE CITY OF BUCKEYE
AND
AXON ENTERPRISES INC.
Contract No. 2020012

CHANGE ORDER #2

THIS CHANGE ORDER #2 (this "Change Order") is entered into as of _____between the City of Buckeye, an Arizona municipal corporation (the "City") and Axon Enterprises Inc., a Delaware corporation (the "Contractor"). This Change Order modifies certain sections of Contract No. **2020012** (the "Contract"), with those sections not expressly modified remaining in full effect pursuant to their terms.

CONTRACT CHANGES:

1. Contract Price is amended by increasing the not-to-exceed amount from **$1,137,245.60** to **$1,517,885.60**.

2. **New Section,** Clickwrap Terms Excluded. In the event the Contract's terms of sale or service were provided to the City only upon "acceptance" of a "clickwrap" or "clickthrough" agreement, such terms of sale or service shall not be binding upon the City. No oral agreement, "clickwrap" or "clickthrough" agreement or other understanding shall in any way modify a City issued or approved contract or this Contract.

RECITAL OF
CONTRACT TERM (END-DATE)
AND
CONTRACT PRICE:

The Contract term end date is governed by a cooperative purchase contract end-date.

The original Contract Price was not-to-exceed (NTE) $1,137,245.60.
The amended Contract Price at the time of this Change Order was NTE $1,137,245.60
The amended Contract Price after this Change Order is and shall be NTE $1,517,885.60.

For reference purposes, **Attachment "1"** attached hereto includes selected pages/portions of the Contract.

ADDITIONAL PROVISIONS:

Except as amended herein, all provisions of the Contract remain in full force and effect.

In the event of any conflict or discrepancy between the terms of this Change Order, the Contract, and any other contract documents, the documents shall govern in that order.

This Change Order may be canceled pursuant to the provisions of A.R.S. § 38-511.

To the extent applicable under A.R.S. § 35-394, Contractor certifies that it does not, and will not for the duration of the Contract, use the forced labor, any goods or services produced by the forced labor, or any contractors, subcontractors, or suppliers that use the forced labor or any goods or services produced by the forced labor of ethnic Uyghurs in the People's Republic of China.

IN WITNESS WHEREOF, the parties hereto have executed this Change Order as of the date first set forth above.

CITY:

THE CITY OF BUCKEYE,
an Arizona municipal corporation

_____
Dan Cotterman, City Manager

CONTRACTOR:

AXON ENTERPRISES INC.,
a Delaware corporation

By: Robert E. Driscoll, Jr.

Title: Deputy General Counsel

ATTEST:

_____
Lucinda Aja, City Clerk

RECOMMENDED:

William Kauppi

_____
William Kauppi, Chief Financial Officer

APPROVED AS TO FORM:

_____
K. Scott McCoy, City Attorney

Attachment "1"

Selected Pages/Portions of Contract

COOPERATIVE PURCHASE AGREEMENT
BETWEEN
CITY OF BUCKEYE
AND
AXON ENTERPRISE, INC.

LAW ENFORCEMENT EQUIPMENT AND MAINTENANCE SERVICES
BODY WORN CAMERAS & ACCESSORIES

CONTRACT NO. 2020012

THIS COOPERATIVE PURCHASE AGREEMENT (this "Agreement") is made between the City of Buckeye, an Arizona municipal corporation (the "City") and Axon Enterprise, Inc., a Delaware Corporation (the "Contractor").

WHEREAS After a competitive procurement process, the Public Procurement Authority ("PPA" entered into a Master Price Agreement No. VH11629, dated October 28, 2015, as amended by Amendment #1 dated June 7, 2017, Amendment #2 dated June 11, 2018 and Amendment #3 dated March 14, 2019 for the Contractor to provide law enforcement equipment and maintenance services (collectively the "PPA Contract"),. The PPA Contract including Contractor's Master Services and Purchasing Agreement is attached hereto as **Exhibit A** and incorporated herein by reference.

WHEREAS The City is permitted by Section 24-3-15 et seq. of the City Procurement Code to make purchases via cooperative purchasing pursuant to a cooperative purchasing agreement. Contractor consents to the City of Buckeye's utilization of the original "PPA" Contract as the basis of this Cooperative Agreement. The parties agree that any usage by other municipalities and government agencies must be in accord with the ordinance, charter and/or rules and regulations of the respective political entity.

WHEREAS Contractor submitted, a price schedule on this contract, attached hereto as **Exhibit B** and incorporated herein by reference.

THEREFORE, The City desires to enter into an Agreement with the Contractor to furnish Law Enforcement Equipment and Maintenance Services and issues the following addendum to the Original Agreement. The Axon service agreement for the City of Buckeye, attached hereto as **Exhibit C.**

In the event of conflict between this addendum and Exhibit C, this addendum shall take precedence. In the event of a conflict between the PPA Contract in Exhibit A and the Contractor's agreement in Exhibit C, Exhibit C shall take precedence.

1. TERM OF AGREEMENT - This Agreement shall be effective as of the date first set forth above and shall remain in full force and effect until **June 30, 2025,** unless extended or renewed by the PPA. Any reference to automatic renewal is hereby deleted. This agreement addendum may be renewed only upon mutual written agreement of the parties.

1.1 SCOPE OF WORK – Contractor shall provide the Materials and Services to the City in accordance with Contractor's quote #Q-243767-44004.966 BM issued 6/22/2020, (a "Work Order"). Each Work order shall (i) contain a reference to this Agreement and the PPA Contract. Contractor acknowledges and agrees that Work orders containing unauthorized exceptions, conditions, limitations or provisions in conflict with the terms of this agreement ("Collectively, the Unauthorized Conditions") other than the City's project-specific requirements, are hereby expressly declared void and shall be of no force and effect.

1.2 INSPECTION AND ACCEPTANCE – All Materials and Services are subject to final inspection and acceptance by the City. Materials ailing to conform to the requirements of this Agreement and/or the PPA contract will be held at the Contractor's risk and may be returned to the Contractor. If so returned, all costs are the responsibility of the Contractor. Notwithstanding the above, all shipments of TASER conducted energy weapon hardware and accessories (collectively, "**CEW Deliverables**") will be delivered to the City FOB shipping point via common carrier, and risk of loss and title to all CEW Deliverables will transfer upon Contractor's delivery to the common carrier.

2. REMEDIES – Any references in the agreement to arbitration or to the jurisdiction of any court are hereby deleted. City shall have all remedies afforded by the Uniform Commercial Code as adopted by the State of Arizona. Contractor shall have, subject to the limitation imposed by the terms of this agreement, all remedies afforded by the Uniform Commercial Code as adopted by the State of Arizona.

3. HOLD HARMLESS - Any clause requiring the City to indemnify or hold harmless any party is hereby deleted in its entirety.

4. GOVERNING LAW - The agreement shall be governed by the laws of the Arizona. This provision replaces any references to any other State's governing law.

5. PAYMENT - Contractor shall provide Equipment and Maintenance of said equipment under the terms and conditions of the PPA contract and this Addendum in an amount not to exceed an aggregate total of **One Million, One Hundred and Thirty Seven Thousand, Two Hundred and Forty Five Dollars and Sixty Cents ($1,137,245.60).** Any references to prepayment are deleted. Payment will be in arrears.

6. INTEREST - Should the agreement include a provision for interest on late payments, the City agrees to pay the maximum legal rate under Arizona law. All other references to interest or late charges are deleted.

7. RECOUPMENT - Any language in the agreement waiving the City's right to set-off, counterclaim, recoupment, or other defense is hereby deleted.

8. FISCAL YEAR FUNDING - Service performed under the agreement may be continued in succeeding fiscal years for the term of the agreement, contingent upon funds being

appropriated by the City Council or otherwise being available for this service. In the event funds are not appropriated or otherwise available for this service, the agreement shall terminate without penalty on June 30. After that date, the agreement becomes of no effect and is null and void. However, the City agrees to use its best efforts to have the amounts contemplated under the agreement included in its budget. Non-appropriation or non-funding shall not be considered an event of default. In the event of termination under this section, City will deliver Contractor notice as soon as reasonably practicable.

9. STATUTE OF LIMITATION - Any clauses limiting the time in which the City may bring suit against the Vendor, lessor, individual, or any other party are deleted.

10. SIMILAR SERVICES - Any provisions limiting the City's right to obtain similar services or equipment in the event of default or non-funding during the term of the agreement are hereby deleted.

11. ATTORNEY FEES - The City recognizes an obligation to pay attorney's fees or costs only when assessed by a court of competent jurisdiction. Any other provision is invalid and considered null and void.

12. ASSIGNMENT - Notwithstanding any clause to the contrary, the City reserves the right to assign the agreement to another City agency, board or commission upon thirty (30) days written notice to the Vendor and Vendor shall obtain the written consent of City prior to assigning the agreement.

13. LIMITATION OF LIABILITY - Limitations on special, incidental or consequential damages are acceptable. In addition, any limitation is null and void to the extent that it precludes any action for injury to persons or for damages to personal property.

14. INDEMNIFICATION - To the fullest extent permitted by law, the Vendor shall indemnify, defend and hold harmless the City and each council member, officer, employee or agent thereof (the City and any such person being herein called an “Indemnified Party”), for, from and against any and all losses, claims, damages, liabilities, costs and expenses (including, but not limited to, reasonable attorneys’ fees, court costs and the costs of appellate proceedings) to which any such Indemnified Party may become subject, under any theory of liability whatsoever (“Claims”), insofar as such Claims (or actions in respect thereof) relate to, arise out of, or are caused by or based upon the negligent acts, intentional misconduct, errors, mistakes or omissions, in connection with the work or services of the Vendor, its officers, employees, agents, or any tier of subcontractor in the performance of this Agreement. The amount and type of insurance coverage requirements set forth below will in no way be construed as limiting the scope of the indemnity in this Section.

15. RIGHT TO TERMINATE – This Agreement may be cancelled pursuant to ARIZ. REV. STAT. § 38-511. City shall have the right to terminate the agreement upon thirty (30) days written notice to Vendor. City agrees to pay Vendor for services rendered or goods received prior to the effective date of termination.

17. TERMINATION CHARGES - Any provision requiring the City to pay a fixed amount or liquidated damages upon termination of the agreement is hereby deleted. The City may only agree to reimburse a Vendor for actual costs incurred or losses sustained during the current fiscal year due to wrongful termination by the City prior to the end of any current agreement term. Notwithstanding, the City acknowledges and agrees that Section 17.3 of Exhibit C shall apply to any termination of this Agreement.

18. RIGHT TO NOTICE - Any provision for repossession of equipment without notice is hereby deleted. However, the City does recognize a right of repossession with notice.

19. ACCELERATION - Any reference to acceleration of payments in the event of default or non-funding is hereby deleted. Notwithstanding, the City acknowledges and agrees that Section 17.3 of Exhibit C shall apply to any termination of this Agreement.

20. CONFIDENTIALITY- Any provision regarding confidentiality of the terms and conditions of the agreement is hereby deleted. City contracts are public records under the Arizona Public Records Law.

21. AMENDMENTS- All amendments, modifications, alterations or changes to the agreement shall be in writing and signed by both parties. No amendment, modification, alteration or change may be made to this addendum without the express written approval of the Construction and Contracting Division and/or the City Manager.

22. NOTICES AND REQUESTS - Any notice or other communication required or permitted to be given under this Agreement shall be in writing and shall be deemed to have been duly given if (A) delivered to the party at the address set forth below, (B) deposited in the U.S. Mail, registered or certified, return receipt requested, to the address set forth below, (C) given to a recognized and reputable overnight delivery service, to the address set forth below or (D) delivered by facsimile transmission to the number set forth below:

If to the City:	City of Buckeye ATTN: Chris Williams, Manager Construction & Contracting Division 530 East Monroe Avenue Buckeye, Arizona 85326 Facsimile: (623) 349-6221
With copy to:	Gust Rosenfeld, P.L.C. ATTN: Sheila B Schmidt One East Washington Street, Suite 1600 Phoenix, Arizona 85004-2553 Facsimile: (602) 254-4878

If to Vendor: Axon Enterprise, Inc.
Attn: Legal
17800 N. 85th Street
Scottsdale, Arizona 85255
Phone: 800-978-2737
Email:legal@Axon.com

[SIGNATURES ON FOLLOWING PAGE]

THEREFORE, the City of Buckeye by its City Manager, Roger Klingler has hereunto subscribed his name this _____ day of Jun 29, 2020, 2020.

THE CITY OF BUCKEYE, ARIZONA:

An Arizona Municipal Corporation

By:_____
Roger Klingler, City Manager

CONTRACTOR:

Axon Enterprise, Inc.

By: _____

Its: VP, Assoc. General Counsel

CITY OF BUCKEYE
Regular Council Meeting
COUNCIL ACTION REPORT

MEETING DATE: 12/17/24	**AGENDA ITEM:** 4.C. DS - Homes at Susan Ranch Final Plat PLZS-22-00021
DATE PREPARED: 12/17/24	**DISTRICT NO.:** 3
STAFF LIAISON: Andrea Marquez, Senior Planner, amarquez@buckeyeaz.gov, (623) 349-6220	
DEPARTMENT: Development Services	**AGENDA ITEM TYPE:** Consent Agenda Items / New Business

ACTION/MOTION: (This language identifies the formal motion to be made by the Council)
Council to take action on a final plat titled Homes at Susan Ranch, generally located east of the northeast corner of Miller and Lower Buckeye Roads.

SUMMARY

PROJECT DESCRIPTION:
CVL Consultants, on behalf of Susan Ranch, LLC, is requesting approval of a final plat titled Homes at Susan Ranch, that consists of 144 lots on approximately 22.80 acres generally located east of the northeast corner of Miller and Lower Buckeye Roads. Full half-street improvements will be constructed along Lower Buckeye Road on the south side of the development. The overall density is 6.32 du/acre with 26% landscaped open space, which is consistent with the Homes at Susan's Ranch Planned Area Development. Amenities will include interconnected neighborhood trails, fitness stations, and swimming pool with turf areas. The final plat is consistent with the approved Homes at Susan Ranch Preliminary Plat case PLZS-20-00082. The applicant has obtained a Certification of Assured Water Supply from the Department of Water Resources, per A.R.S. 9-463.01(I).

BENEFITS:
Approval of this plat will create new lots for development for future single-family residential homes.

FUTURE ACTION:
N/A

FINANCIAL IMPACT STATEMENT:
N/A

FINANCIAL IMPACT STATEMENT:
Although a fiscal impact analysis has not been conducted on this specific project, all new development will have an ongoing fiscal impact on the city. The development is responsible for construction of all infrastructure necessary to serve the site and will generate one-time revenue for the city such as permit fees, construction sales tax and development impact fees. Longer term fiscal impacts include increased demands for municipal services, the costs of which may or may not be offset by increased property values/tax levies, city sales tax, state shared revenues and the increased demand for commercial and retail development. Any areas that will be maintained by the city are constructed by the developer and then conveyed to the city two years after construction.

CURRENT FISCAL YEAR TOTAL COST:
N/A

FISCAL YEAR:
N/A

FUND/DEPARTMENT:
N/A

Items related to a project or facility location must include an attached vicinity map for Council Review.
ATTACHMENTS:
Susans Ranch DWR - Cert Assured Water Supply.pdf
plzs-22-00021 WATER SUPPLY LETTER.pdf
DS.SR.FPLAT.pdf
Vicinity Map.pdf

STATE OF ARIZONA
DEPARTMENT OF WATER RESOURCES
CERTIFICATE OF ASSURED WATER SUPPLY

This is to certify that

Susan Ranch, LLC, an Arizona limited liability company, Owner,

has met the requirements of A.R.S. §§ 45-576 and A.A.C.R12-15-701 et. seq., and

By powers vested in the Director of the Arizona Department of Water Resources by the State of Arizona, and subject to the conditions contained in A.A.C. R12-15-701 et seq.,

Is issued this Certificate of Assured Water Supply for

Homes at Susan's Ranch
Township 1 North, Range 3 West, Section 17
GSRB&M Maricopa County, PHOENIX AMA

The referenced subdivision consists of **144 lots** as described in the preliminary plat on file with the Department, and has an estimated water demand of **59.10 acre-feet per year.** The subdivision will be served **groundwater** by **City of Buckeye - Valencia Town Division.**

This Certificate is invalid as to any entity not named above.
This Certificate may be assigned pursuant to A.A.C. R12-15-705.

Certificate Number: 27-701277.0000

ARIZONA DEPARTMENT OF WATER RESOURCES

David L McKay

Program Manager

March 7, 2023
Date

TYPE A CERTIFICATE

Adobe Acrobat Sign Transaction Number: CBJCHBCAABAApOG2LmESDnquze72l6q_6aLgjxQZhbjN

KATIE M. HOBBS
Governor

THOMAS BUSCHATZKE
Director

ARIZONA DEPARTMENT of WATER RESOURCES
1110 West Washington Street, Suite 310
Phoenix, Arizona 85007
602.771.8500

azwater.gov

March 7, 2023

***Via Electronic Mail to*:** dhauver@mnwe.com

DeAnn Hauver
Matrix New World Engineering
3033 North 44th Street, Suite 270
Phoenix, AZ 85018

Re: Certificate of Assured Water Supply
Homes at Susan's Ranch
DWR No. 27-701277.0000

Dear Ms. Hauver:

The Arizona Department of Water Resources (Department) has determined that the criteria for an Assured Water Supply pursuant to A.R.S. § 45-576 and A.A.C. R12-15-701 *et seq.* have been met, and therefore the Director has decided to issue Certificate of Assured Water Supply No. 27-701277.0000, attached.

City of Buckeye - Valencia Town Division will provide water to the subdivision. The source of supply will be groundwater. The annual estimated water demand of the subdivision is 59.10 acre-feet per year for 144 lots, and the groundwater allowance for the subdivision for the 100-year period is 59.10 acre-feet. Pursuant to A.R.S. § 45-578(F), the total projected average annual replenishment obligation at build-out for each plat under the Certificate is 58.51 acre-feet per year.

The Department suggests you record your Certificate of Assured Water Supply in the appropriate county recorder's office. This will provide you with a permanent public record of the Certificate. This determination is applicable only to the persons or entities specified on the Certificate and for the plat reviewed by the Department, including non-material plat changes pursuant to A.A.C. R12-15-708.

Pursuant to A.R.S. § 41-1092.03, the Director's determination and decision to issue the Certificate is an appealable agency action. You are entitled to appeal this action. If you wish to appeal this action, you must file a written appeal within thirty (30) days from receipt of this letter. A summary of the appeal process and an appeal form are attached, should you elect to pursue this option.

Sincerely,

David L McKay

David L. McKay
Manager, AAWS & Recharge Permitting

DLM/dmc

Page 2
Subdivision Name: Homes at Susan's Ranch
File Number: 27-701277.0000

CC: Via Electronic Mail:

CAGRD
Arizona Department of Real Estate
Arizona Department of Environmental Quality
Arizona State Land Department

Adobe Acrobat Sign Transaction Number: CBJCHBCAABAApOG2LmESDnquze72I6q_6aLgjxQZhbjN

A FINAL PLAT OF HOMES AT SUSAN RANCH

A PORTION OF THE SOUTHWEST QUARTER OF SECTION 17, TOWNSHIP 1 NORTH, RANGE 3 WEST OF THE GILA AND SALT RIVER BASE AND MERIDIAN, MARICOPA COUNTY, ARIZONA.

DEDICATION

STATE OF ARIZONA)
) SS
COUNTY OF MARICOPA)

KNOW ALL PERSONS BY THESE PRESENTS: THAT SUSAN RANCH, L.L.C., AN ARIZONA LIMITED LIABILITY COMPANY, AS OWNER, HAS SUBDIVIDED UNDER THE NAME, "HOMES AT SUSAN RANCH", A SUBDIVISION LOCATED IN A PORTION OF SOUTHWEST QUARTER OF SECTION 17, TOWNSHIP 1 NORTH, RANGE 3 WEST OF THE GILA AND SALT RIVER BASE AND MERIDIAN, MARICOPA COUNTY, ARIZONA, AS SHOWN AND PLATTED HEREON AND DOES HEREBY PUBLISH THIS PLAT AS AND FOR THE PLAT OF "HOMES AT SUSAN RANCH", AND DECLARES THAT THIS PLAT SETS FORTH THE LOCATION AND GIVES THE DIMENSIONS OF EACH LOT, TRACT, STREET AND EASEMENT CONSTITUTING SAME, AND THAT EACH LOT, TRACT, STREET AND EASEMENT SHALL BE KNOWN BY THE NUMBER, LETTER, AND/OR NAME GIVEN TO EACH RESPECTIVELY AS SHOWN ON THIS PLAT.

OWNER HEREBY DEDICATES TO THE CITY OF BUCKEYE FEE TITLE TO ALL PUBLIC RIGHT-OF-WAYS AS SHOWN ON THE PLAT.

OWNER HEREBY GRANTS TO THE CITY OF BUCKEYE, A NON-EXCLUSIVE EASEMENT OVER, UPON AND ACROSS THE AREAS DESIGNATED AS PUBLIC UTILITY EASEMENTS AS SHOWN ON THE PLAT FOR THE PURPOSE OF INSTALLING, CONSTRUCTING, MAINTAINING, REPAIRING, REPLACING AND UTILIZING PUBLIC UTILITIES.

OWNER HEREBY GRANTS TO THE CITY OF BUCKEYE AN EXCLUSIVE WATER EASEMENT OVER, UPON AND ACROSS THE AREAS DESIGNATED AS WATER & SEWER EASEMENT AS SHOWN ON THE PLAT FOR THE PURPOSE OF INSTALLING, CONSTRUCTING, MAINTAINING, REPAIRING, REPLACING AND UTILIZING WATER/WASTEWATER LINES AND APPURTENANCES. NOTWITHSTANDING THE EXCLUSIVE NATURE OF THIS EASEMENT, IT SHALL BE PERMISSIBLE FOR PORTIONS OF THE EASEMENT AREA TO BE ENCUMBERED BY OTHER EASEMENTS IN FAVOR OF THE CITY OR THE PUBLIC WHICH ARE CREATED PURSUANT TO A PLAT OR ANOTHER INSTRUMENT THAT HAS BEEN APPROVED IN ACCORDANCE WITH ALL CITY REQUIREMENTS.

OWNER HEREBY GRANTS TO THE CITY OF BUCKEYE A NON-EXCLUSIVE DRAINAGE EASEMENT OVER, UPON AND ACROSS THE AREAS DESIGNATED AS DRAINAGE EASEMENT AS SHOWN ON THE PLAT FOR THE PURPOSE OF CONSTRUCTION, OPERATION, REPLACEMENT, AND REPAIRS OF CHANNELS AND OTHER WORKS OF DRAINAGE OR FLOOD CONTROL. MAINTENANCE SHALL BE THE RESPONSIBILITY OF THE OWNER OF THE LOT OR TRACT WHERE THE EASEMENT IS LOCATED HEREON.

TRACT NN IS HEREBY DECLARED A PRIVATE ACCESS WAY TO BE OWNED AND MAINTAINED BY THE HOMEOWNERS ASSOCIATION. OWNER HEREBY GRANTS THE CITY OF BUCKEYE A PERPETUAL EASEMENT OVER, UPON AND ACROSS TRACT NN FOR THE PURPOSE OF VEHICULAR INGRESS AND EGRESS WITHOUT LIMITATION, FOR POLICE, FIRE, AMBULANCE AND OTHER EMERGENCY VEHICLES.

OWNER HEREBY GRANTS TO THE CITY OF BUCKEYE A PERPETUAL EASEMENT OVER, UPON AND ACROSS TRACT AA, CC, EE, GG, II, KK, B, D, F, H, I, J, L, N, NN, P, R, T, V, X, AND Y FOR THE PURPOSE OF VEHICULAR INGRESS AND EGRESS WITHOUT LIMITATION, FOR POLICE, FIRE, AMBULANCE AND OTHER EMERGENCY VEHICLES, AND FOR PUBLIC SERVICE VEHICLES; INSTALLING CONSTRUCTING, MAINTAINING, REPLACING, REPAIRING, REMOVING AND OPERATING UNDERGROUND PUBLIC UTILITIES AND RELATED FACILITIES TO THE EXTENT APPROVED BY THE CITY AND PROVIDED THAT SUCH IMPROVEMENTS DO NOT UNREASONABLY INTERFERE WITH THE USE OF SUCH TRACT FOR VEHICULAR INGRESS AND EGRESS PURPOSES; AND INSTALLING, CONSTRUCTING, MAINTAINING, REPLACING, REPAIRING, REMOVING AND OPERATING SIDEWALK IMPROVEMENTS AND PROVIDING PASSAGE THEREON OF PEDESTRIANS, BICYCLES AND WHEELCHAIRS.

OWNER HEREBY GRANTS TO THE CITY OF BUCKEYE A PERPETUAL EASEMENT OVER, UPON AND ACROSS TRACT A, BB, C, DD, E, FF, G, HH, JJ, K, LL, M, MM, O, Q, S, U, W, AND Z FOR THE PURPOSE OF INSTALLING CONSTRUCTING, MAINTAINING, REPLACING, REPAIRING, REMOVING AND OPERATING UNDERGROUND PUBLIC UTILITIES AND RELATED FACILITIES TO THE EXTENT APPROVED BY THE CITY; AND INSTALLING, CONSTRUCTING, MAINTAINING, REPLACING, REPAIRING, REMOVING AND OPERATING SIDEWALK IMPROVEMENTS AND PROVIDING PASSAGE THEREON OF PEDESTRIANS, BICYCLES AND WHEELCHAIRS.

OWNER HEREBY GRANTS TO THE CITY OF BUCKEYE A NON-EXCLUSIVE EASEMENT OVER, UPON AND ACROSS THE AREA DESIGNATED AS V.N.A.E. FOR THE PURPOSE OF PREVENTING VEHICULAR ACCESS.

OWNER HEREBY GRANTS TO THE CITY OF BUCKEYE, A NON-EXCLUSIVE EASEMENT OVER, UPON AND ACROSS THE AREAS DESIGNATED AS SIGHT VISIBILITY TRIANGLES FOR THE PURPOSE OF ENSURING THAT THESE AREAS REMAIN FREE OF SIGHT VISIBILITY OBSTRUCTIONS AS PER THE ENGINEERING DESIGN STANDARDS.

THE MAINTENANCE OF LANDSCAPING WITHIN THE OPEN SPACES, LANDSCAPED TRACTS, RETENTION BASINS AND PARKS SHALL BE THE RESPONSIBILITY OF THE OWNER OR THE ASSOCIATION FORMED BY THE OWNER.

THE MAINTENANCE OF LANDSCAPING WITHIN THE ADJACENT PUBLIC RIGHT-OF-WAYS, INCLUDING; LANDSCAPED MEDIANS WITHIN COLLECTORS AND LOCAL STREETS AND LANDSCAPED AREAS BETWEEN THE CURB AND THE DETACHED SIDEWALK, SHALL BE THE RESPONSIBILITY OF THE ADJACENT PROPERTY OWNER OR THE PROPERTY ASSOCIATION FORMED BY THE ADJACENT PROPERTY.

OWNER HEREBY GRANTS TO THE CITY OF BUCKEYE, A PUBLIC RECREATION PATH, TRAIL, AND/OR SIDEWALK EASEMENT FOR PEDESTRIAN, BICYCLING AND OTHER NON-MOTORIZED USES FOR ACCESS OVER AND ACROSS ONLY PATHS, TRAILS, AND/OR SIDEWALK LOCATED WITHIN TRACTS ON OWNER'S PROPERTY, INCLUDING THE RIGHT OF INGRESS AND EGRESS ALONG AND ACROSS THE EASEMENT PREMISES, AS SHOWN ON THIS PLAT. MAINTENANCE AND PUBLIC SAFETY VEHICLES BY EITHER THE PROPERTY OWNER, HOA, OR CITY MAY USE THE PATH TO PERFORM ROUTINE MAINTENANCE OR FOR PUBLIC SAFETY. MAINTENANCE OF THE PATH, TRAIL AND/OR SIDEWALK AND ASSOCIATED AMENITIES SUCH AS LIGHTING, LANDSCAPING, AND SITE FURNITURE WITHIN THE EASEMENT SHALL BE THE RESPONSIBILITY OF THE HOMEOWNERS ASSOCIATION, A NON-PROFIT ASSOCIATION OF HOMEOWNERS WITHIN HOMES AT SUSAN RANCH UPON FORMATION OF SUCH ASSOCIATION OR PROPERTY OWNER.

SUSAN RANCH, L.L.C., AN ARIZONA LIMITED LIABILITY COMPANY ('OWNER') DOES HEREBY; (1) RELEASE AND DISCHARGE THE CITY OF BUCKEYE, AND (2) INDEMNIFY, DEFEND, AND HOLD HARMLESS THE CITY OF BUCKEYE, OF AND FROM ANY LIABILITY FOR ANY AND ALL CLAIMS FOR DAMAGES OF ANY KIND TO PERSONS OR PROPERTY THAT MAY ARISE AT ANY TIME IN THE FUTURE OVER, OR IN CONNECTION WITH THE AREAS LOCATED WITHIN THE NEWLY DEDICATED RIGHT-OF-WAY AS DEPICTED ON THIS PLAT UNTIL SUCH TIME THE RIGHT-OF-WAY IS IMPROVED TO CITY STANDARDS AND THOSE IMPROVEMENTS ARE APPROVED AND ACCEPTED BY THE CITY COUNCIL. THE MAINTENANCE OF THE AREA WITHIN ANY NEWLY DEDICATED RIGHT-OF-WAY AS SHOWN ON THIS PLAT SHALL BE THE RESPONSIBILITY OF THE ADJACENT OWNER/OR SUBSEQUENT ADJACENT OWNERS WITHIN THE BOUNDARY OF SAID PLAT UNTIL SUCH TIME THAT THE AREA WITHIN THE RIGHT-OF-WAY IS IMPROVED TO CITY STANDARD AND ACCEPTED BY THE CITY OF BUCKEYE.

ALL IMPROVEMENTS, FOR STREETS AND PUBLIC UTILITIES OWNED AND OPERATED BY THE CITY, INSTALLED OR CONSTRUCTED BY OWNER WITHIN THE PUBLIC RIGHT-OF-WAYS, THE EASEMENTS, OR ANY TRACTS OR PARCELS HEREBY DEDICATED TO THE CITY OF BUCKEYE SHALL BE DEEMED TO HAVE BEEN DEDICATED BY OWNER TO THE CITY UPON THEIR COMPLETION; HOWEVER, SUCH TRANSFER SHALL NOT OCCUR UNTIL THE CITY OF BUCKEYE MANIFESTS ITS ACCEPTANCE BY SEPARATE FORMAL ACTION.

THE EASEMENTS GRANTED WITHIN THIS DEDICATION ARE PERMANENT AND PERPETUAL AND SHALL RUN WITH THE LAND AND BE BINDING UPON OWNER AND ITS HEIRS, ASSIGNS, AND SUCCESSORS IN INTEREST TO THIS PLAT OR ANY PARCEL OR LOT THEREOF.

IN WITNESS WHEREOF, OWNER HAS HEREUNTO CAUSED ITS CORPORATE NAME TO BE SIGNED AND ITS CORPORATE SEAL TO BE AFFIXED BY THE UNDERSIGNED, DULY AUTHORIZED OFFICER THIS _____ DAY OF _____, 202___.

SUSAN RANCH, L.L.C., AN ARIZONA LIMITED LIABILITY COMPANY

_____ _____
BY: ITS:

NOTES

1. THE PROPERTY OWNERS, OR ANY SUBSEQUENT OWNERS SHALL NOT PROCEED WITH ANY ON SITE GRADING OR EXCAVATION WITHOUT FIRST OBTAINING A PERMIT FROM THE CITY OF BUCKEYE.

2. THE ROADS DESIGNATED AS "PRIVATE" AND ANY APPURTENANCES INCLUDING BUT NOT LIMITED TO ROAD SIGNS, STRIPING, CURB AND CUTTER, AND SIDEWALKS ARE PRIVATE; SUCH ROADS AND APPURTENANCES ARE OWNED, MAINTAINED AND REPAIRED BY OWNER OR THE ASSOCIATION FORMED BY OWNER. THE CITY OF BUCKEYE SHALL NOT MAINTAIN OR REPAIR ANY ROAD DESIGNATED AS "PRIVATE".

3. IN ACCORDANCE WITH ARS § 9-461.07, THE CITY OF BUCKEYE HAS DETERMINED THAT ALL DEDICATIONS OCCURRING WITH THIS PLAT ARE IN CONFORMANCE WITH THE GENERAL PLAN.

4. PURSUANT TO A.R.S. § 42-11102, THE CITY OF BUCKEYE, A POLITICAL SUBDIVISION OF THE STATE OF ARIZONA, IS EXEMPT FROM ALL TAXES AND ASSESSMENTS BASED ON ASSESSED VALUE EXCEPT FOR SPECIAL DISTRICTS #14751 AND 14710, WHEN APPLICABLE.

5. THIS SITE CONSISTS OF A TOTAL OF 144 LOTS, AND 40 TRACTS IN THE SF-3 PAD ZONING DISTRICT.

6. THIS FINAL PLAT IS IN SUBSTANTIAL CONFORMANCE WITH THE PRELIMINARY PLAT APPROVED ON MAY 10, 2022 UNDER CASE # PLZS-20-00082.

7. THIS SUBDIVISION WAS ISSUED A CERTIFICATE OF ASSURED WATER SUPPLY BY ARIZONA DEPARTMENT OF WATER RESOURCES ON MARCH 7, 2023 WITH ADWR CERTIFICATE # 27-701277.0000.

8. EXCEPT FOR CONSTRUCTION AND IMPROVEMENTS BY GOVERNMENTAL ENTITIES AND CERTIFIED PUBLIC UTILITIES, CONSTRUCTION AND IMPROVEMENTS WITHIN UTILITY EASEMENTS SHALL BE LIMITED TO ONLY THE FOLLOWING:
   A. WOOD, WIRE, OR REMOVABLE SECTION TYPE FENCING.
   B. CONSTRUCTION, STRUCTURES. OR BUILDINGS EXPRESSLY APPROVED IN WRITING BY THE CITY OF BUCKEYE AND ALL PUBLIC UTILITIES WHICH USE OR MAY USE THE UTILITY EASEMENT.
   C. PUBLIC UTILITY EASEMENTS SHALL BE TREE FREE.

9. ALL NEW OR RELOCATED UTILITIES WILL BE PLACED UNDERGROUND EXCEPT FOR POWER LINES 69KV AND LARGER.

10. AN 18" REBAR WITH L.S. CAP WILL BE SET AT ALL BOUNDARY CORNERS, LOT CORNERS, POINTS OF CURVATURE, POINTS OF TANGENCY, AND ANGLE POINTS AT COMPLETION OF MASS GRADING.

11. VISIBILITY EASEMENT RESTRICTIONS: ANY OBJECT, WALL, STRUCTURE, MOUND, OR LANDSCAPING (MATURE) OVER 24" IN HEIGHT IS NOT ALLOWED WITHIN THE VISIBILITY EASEMENT. TREE CANOPIES OVERHANGING THE EASEMENT, SHALL BE KEPT TRIMMED TO A HEIGHT NO LESS THAN 7'. NO BOULDERS ARE TO BE INSTALLED IN THE VNAE, PUE, OR RIGHT-OF-WAY OR WITHIN 6 FEET OF THE BACK OF CURB. ANY VEGETATION VIOLATING THESE RESTRICTIONS INCLUDING TREES, SHRUBS, BUSHES OR GROUND COVER, MAY BE REMOVED FOR ANY REASON IF DEEMED NECESSARY BY THE CITY OF BUCKEYE.

12. FINAL PLAT APPROVAL BY THE CITY IS CONDITIONAL AND SUBJECT TO FINANCIAL ASSURANCES BEING IN PLACE FOR ALL IMPROVEMENTS AS SHOWN ON THE APPROVED PLANS. THE CITY WILL NOT RECORD ANY PLATS UNTIL SUCH TIME FINANCIAL ASSURANCES ARE IN PLACE. IF AFTER ONE YEAR FROM CITY COUNCIL APPROVAL THE FINAL PLAT HAS NOT BEEN RECORDED, THEN IT SHALL BE NULL AND VOID. A VALID PRELIMINARY PLAT NEEDS TO BE IN PLACE PRIOR TO APPROVAL OF ANY FINAL PLAT ASSOCIATED WITHIN THE PROJECT IN ACCORDANCE WITH THE DEVELOPMENT CODE. THE SIGNED PLAT WILL NOT BE SUBMITTED TO THE CITY FOR SIGNATURE AND RECORDING UNTIL FINANCIAL ASSURANCES ARE IN PLACE.

13. THIS SUBDIVISION IS SUBJECT TO A STREET LIGHTING IMPROVEMENT DISTRICT (2019-SLID-001).

14. ALL BUILDINGS SHALL BE EQUIPPED WITH A FIRE PROTECTION SYSTEM AS REQUIRED BY CITY OF BUCKEYE ORDINANCE 20-13.

15. NO STRUCTURE OF ANY KIND SHALL BE CONSTRUCTED OR ANY VEGETATION TO BE PLANTED OR BE ALLOWED TO GROW WITHIN ANY DRAINAGE EASEMENT WHICH WOULD IMPEDE THE FLOW OF WATER OVER, UNDER, OR THROUGH EASEMENTS.

16. OWNER HEREBY GRANTS TO THE CITY OF BUCKEYE, AN ARIZONA MUNICIPAL CORPORATION, AN ITS SUCCESSORS AND ASSIGNS, A PUBLIC RECREATION PATH AND/OR TRAIL EASEMENT FOR PEDESTRIAN, BICYCLING AND OTHER NON-MOTORIZED FORMS OF ACCESS OVER AND ACROSS ONLY PATHS AND TRAILS LOCATED WITHIN TRACTS ON OWNER'S PROPERTY, INCLUDING THE RIGHT OF INGRESS AND EGRESS ALONG AND ACROSS THE EASEMENT PREMISES, AS SHOWN ON THIS PLAT. MAINTENANCE AND PUBLIC SAFETY VEHICLES BY EITHER THE PROPERTY OWNER, HOA, OR CITY MAY USE THE PATH TO PERFORM ROUTINE MAINTENANCE OR FOR PUBLIC SAFETY. MAINTENANCE OF THE PATH AND/OR TRAIL AND ASSOCIATED AMENITIES SUCH AS LIGHTING, LANDSCAPING, AND SITE FURNITURE WITHIN THE EASEMENT SHALL BE THE RESPONSIBILITY OF THE HOMEOWNERS ASSOCIATION, A NON-PROFIT ASSOCIATION OF HOMEOWNERS WITHIN HOMES AT SUSAN RANCH UPON FORMATION OF SUCH ASSOCIATION OR PROPERTY OWNER.

ACKNOWLEDGEMENT

STATE OF ARIZONA)
) SS
COUNTY OF MARICOPA)

ON THIS, THE _____ DAY OF _____, 20___, BEFORE ME THE UNDERSIGNED NOTARY PUBLIC, PERSONALLY APPEARED _____ WHO ACKNOWLEDGED HIMSELF TO BE THE _____ OF SUSAN RANCH, L.L.C., AN ARIZONA LIMITED LIABILITY COMPANY, AND ACKNOWLEDGED THAT HE, AS SUCH OFFICER, BEING AUTHORIZED TO DO SO, EXECUTED THE FOREGOING INSTRUMENT ON BEHALF OF SUSAN RANCH, L.L.C. FOR THE PURPOSES HEREIN CONTAINED.

IN WITNESS WHEREOF : I HEREUNTO SET MY HAND AND OFFICIAL SEAL.

MY COMMISSION EXPIRES: _____ _____
NOTARY PUBLIC

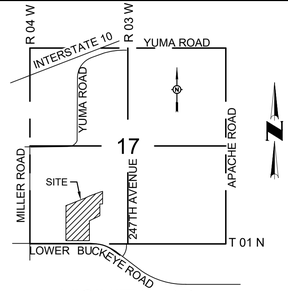

VICINITY MAP
(NOT-TO-SCALE)

OWNER/DEVELOPER

SUSAN RANCH, L.L.C.
18801 N. THOMPSON PEAK PKWY #240
SCOTTSDALE, ARIZONA 85255
CONTACT: MR. TANNER LUSTER
PHONE: 602-363-9170
EMAIL: TANNER@DELOSCOMMUNITIES.COM

SURVEYOR

COE & VAN LOO CONSULTANTS, INC.
4550 NORTH 12TH STREET
PHOENIX, ARIZONA 85014
PHONE: (602)-264-6831
CONTACT: RICHARD G. ALCOCER, RLS
E-MAIL: CVLSURVEY@CVLCI.COM

APPROVAL

APPROVED BY THE COUNCIL OF THE CITY OF BUCKEYE ON THIS _____ DAY OF _____,20___.

BY:_____
MAYOR

ATTEST:_____
CITY CLERK

I CERTIFY THAT ALL ENGINEERING CONDITIONS AND REQUIREMENTS HAVE BEEN COMPLIED WITH.

BY:_____ DATE
BUCKEYE CITY ENGINEER

BY:_____ DATE
DEVELOPMENT SERVICES DIRECTOR

SHEET INDEX

COVER	1
TABLES , LEGEND, KEY MAP, AND DETAIL	2
FINAL PLAT	3-8
TABLES	9

CERTIFICATION

I, RICHARD G. ALCOCER, HEREBY CERTIFY THAT I AM A REGISTERED LAND SURVEYOR IN THE STATE OF ARIZONA, THAT THIS MAP, CONSISTING OF NINE (9) SHEETS, CORRECTLY REPRESENTS A BOUNDARY SURVEY MADE UNDER MY SUPERVISION DURING THE MONTH OF MAY, 2020, THAT THE SURVEY IS TRUE AND COMPLETE AS SHOWN, THAT ALL MONUMENTS SHOWN ACTUALLY EXIST OR WILL BE SET AS SHOWN, THAT THEIR POSITIONS ARE CORRECTLY SHOWN AND THAT SAID MONUMENTS ARE SUFFICIENT TO ENABLE THE SURVEY TO BE RETRACED.

ARIZONA REGISTERED LAND SURVEYOR #33851

BY:_____
RICHARD G. ALCOCER

BASIS OF BEARING

NORTH 89°48'16" EAST ALONG THE SOUTH LINE OF THE SOUTHWEST QUARTER OF SECTION 17, TOWNSHIP 1 NORTH, RANGE 3 WEST OF THE GILA AND SALT RIVER BASE AND MERIDIAN, ACCORDING TO BOOK 174 OF MAPS, PAGE 5, MARICOPA COUNTY RECORDS.

THE GDACS PLAT IN BOOK 638 OF MAPS, PAGE 32 GIVES THIS BEARING AS SOUTH 89°56'58" EAST.

SITE AREA

GROSS: 993,022 S.F. OR 22.797 ACRES

FLOOD ZONE DESIGNATION

THE PROPERTY IS LOCATED WITHIN AN AREA DESIGNATED AS HAVING FLOOD ZONE "X" BY THE FEDERAL EMERGENCY MANAGEMENT AGENCY, ON FLOOD INSURANCE RATE MAP NO 04013C-2115L, WITH A REVISION DATE OF OCTOBER 16, 2013 FOR COMMUNITY NO. 040039 , IN THE CITY OF BUCKEYE, COUNTY OF MARICOPA, STATE OF ARIZONA, WHICH IS THE CURRENT FLOOD INSURANCE RATE MAP FOR THE COMMUNITY IN WHICH SAID PROPERTY IS SITUATED.

ZONE "X (SHADED)":
AREAS OF 0.2% ANNUAL CHANCE FLOOD; AREAS OF 1% ANNUAL CHANCE FLOOD WITH AVERAGE DEPTHS OF LESS THAN 1 FOOT OR WITH DRAINAGE AREAS LESS THAN 1 SQUARE MILE; AND AREAS PROTECTED BY LEVEES FROM 1% ANNUAL CHANCE FLOOD.

ASSURED WATER SUPPLY

THE ARIZONA DEPARTMENT OF WATER RESOURCES HAS GRANTED A CERTIFICATE OF ASSURED WATER SUPPLY, ARIZONA DEPARTMENT OF WATER RESOURCES FILE NO. 27-701277.0000, FOR THE SUBDIVISION IN ACCORDANCE WITH SECTION 45-576 OF THE ARIZONA REVISED STATUTES (ARS).

Call at least two full working days before you begin excavation.
ARIZONA811
Arizona Blue Stake, Inc.
Dial 8-1-1 or 1-800-STAKE-IT (782-5348)
In Maricopa County: (602) 263-1100

MANAGING ENGINEERING / SURVEYOR	RICHARD G. ALCOCER, R.L.S.
PROJECT COORDINATOR	MATT OLSEN, P.E.
DESIGN LAYOUT	CVL
DRAFTED	CVL
CHECKED	CVL
FIELD SURVEY	
DRAFTED	
CHECKED	
DRAWING SCALES	AS NOTED

PLAN TYPE: FINAL PLAT

ENGINEER INFORMATION:
CVL
COE & VAN LOO CONSULTANTS, INC
PLANNING ENGINEERING LANDSCAPE ARCHITECTURE
4550 NORTH 12TH STREET
PHOENIX, ARIZONA 85014
TELEPHONE (602) 264-6831

PROJECT: HOMES AT SUSAN RANCH

COB PROJECT PLAN STICKER

REVISIONS:
1
2
3

COB PERMITTING APPROVED SEAL

COB ENGINEERING APPROVED SEAL

SUBMITTAL: 5TH SUBMITTAL

AS-BUILT SEAL

DESIGN SEAL
Registered Land Surveyor
CERTIFICATE NO.
33851
RICHARD G. ALCOCER
11/18/24
Date Signed
ARIZONA, U.S.A.
EXPIRES: 06-30-26

ORIGINAL PLAN DATE	LATEST REVISION DATE
11/18/24	
PROJECT NUMBER	SHEET NUMBER
CVL: 01-0344702	1 OF 9

COB PLAN TRACKING # PLZS -22-00021

COB PERMIT #

Printed By: Dominique Print Date: November 16, 2024 Filename: \\phx-cvlfile4\Engrdata\01\0344702\CAD\DGS.FPLAT.01-05.dwg

LOT AREA TABLE		
LOT	AREA (SQUARE FEET)	AREA (ACRES)
1	4,055	0.093
2	3,432	0.079
3	3,432	0.079
4	4,877	0.112
5	3,564	0.082
6	3,564	0.082
7	4,877	0.112
8	3,432	0.079
9	3,890	0.089
10	3,900	0.090
11	4,877	0.112
12	3,564	0.082
13	3,564	0.082
14	4,877	0.112
15	3,900	0.090
16	3,900	0.090
17	4,877	0.112
18	3,564	0.082
19	3,564	0.082
20	4,877	0.112
21	3,900	0.090
22	3,900	0.090
23	4,877	0.112
24	3,564	0.082
25	3,564	0.082
26	4,877	0.112
27	3,888	0.089
28	3,420	0.079
29	4,432	0.102
30	3,129	0.072
31	3,129	0.072
32	4,437	0.102
33	3,432	0.079
34	3,886	0.089
35	3,900	0.090
36	3,432	0.079
37	4,437	0.102
38	3,129	0.072
39	3,129	0.072
40	4,437	0.102
41	3,432	0.079
42	3,900	0.090
43	3,900	0.090
44	3,432	0.079
45	4,437	0.102
46	3,129	0.072
47	3,129	0.072
48	4,437	0.102
49	3,432	0.079
50	3,900	0.090
51	3,900	0.090
52	3,432	0.079
53	4,437	0.102
54	3,129	0.072

LOT AREA TABLE		
LOT	AREA (SQUARE FEET)	AREA (ACRES)
55	3,130	0.072
56	4,437	0.102
57	3,432	0.079
58	3,900	0.090
59	3,910	0.090
60	3,432	0.079
61	4,437	0.102
62	3,130	0.072
63	3,129	0.072
64	4,437	0.102
65	3,432	0.079
66	3,949	0.091
67	3,717	0.085
68	4,424	0.102
69	5,204	0.119
70	4,917	0.113
71	3,135	0.072
72	3,130	0.072
73	4,922	0.113
74	3,876	0.089
75	3,876	0.089
76	3,875	0.089
77	4,113	0.094
78	4,467	0.103
79	4,861	0.112
80	4,519	0.104
81	4,211	0.097
82	3,588	0.082
83	3,432	0.079
84	4,437	0.102
85	3,129	0.072
86	3,130	0.072
87	4,437	0.102
88	3,432	0.079
89	3,588	0.082
90	3,588	0.082
91	3,432	0.079
92	4,437	0.102
93	3,129	0.072
94	3,130	0.072
95	4,424	0.102
96	3,432	0.079
97	3,588	0.082
98	3,520	0.081
99	3,520	0.081
100	4,972	0.114
101	3,900	0.090
102	3,432	0.079
103	4,424	0.102
104	3,130	0.072
105	3,129	0.072
106	4,437	0.102
107	3,432	0.079

LOT AREA TABLE		
LOT	AREA (SQUARE FEET)	AREA (ACRES)
108	3,900	0.090
109	3,900	0.090
110	3,432	0.079
111	4,437	0.102
112	3,130	0.072
113	3,130	0.072
114	4,437	0.102
115	3,432	0.079
116	3,900	0.090
117	5,916	0.136
118	3,906	0.090
119	4,437	0.102
120	3,129	0.072
121	3,130	0.072
122	4,437	0.102
123	3,130	0.072
124	3,129	0.072
125	4,437	0.102
126	3,899	0.090
127	3,892	0.089
128	4,425	0.102
129	3,129	0.072
130	4,437	0.102
131	3,886	0.089
132	5,020	0.115
133	3,980	0.091
134	3,978	0.091
135	4,657	0.107
136	3,344	0.077
137	3,344	0.077
138	4,647	0.107
139	3,432	0.079
140	4,233	0.097

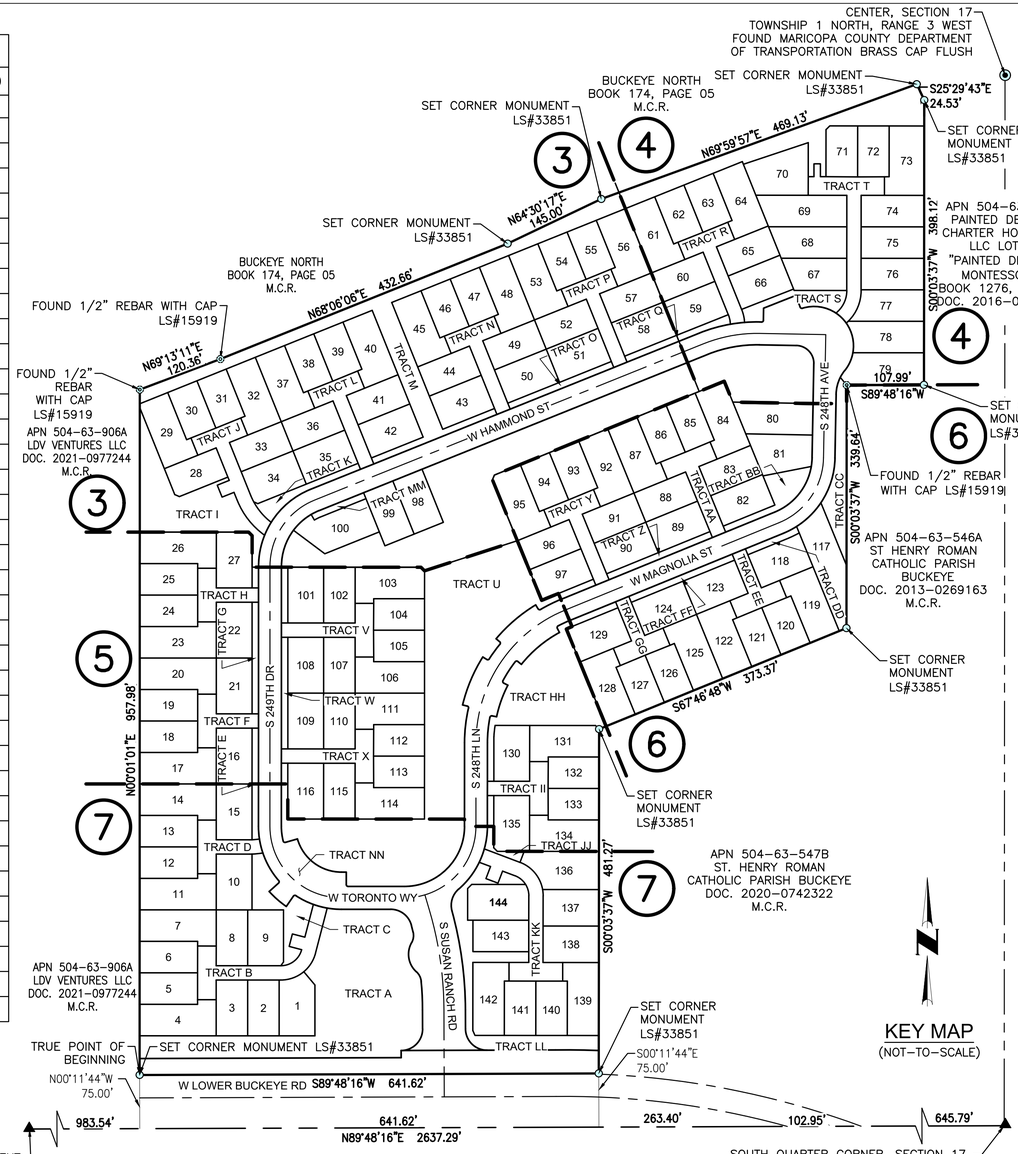

KEY MAP
(NOT-TO-SCALE)

LEGEND

- SECTION CORNER – FOUND BRASS CAP (UNLESS OTHERWISE NOTED)
- FOUND BRASS CAP PER ADJOINING RECORDED SUBDIVISION (UNLESS OTHERWISE NOTED)
- CENTERLINE MONUMENTATION – SET BRASS CAP FLUSH UPON COMPLETION OF JOB PER M.A.G. STD. DTL. 120, TYPE "B" (UNLESS OTHERWISE NOTED)
- CORNER OF THIS SUBDIVISION – SET SURVEY MARKER PER M.A.G. STD. DTL. 120, TYPE "C" – MODIFIED (UNLESS OTHERWISE NOTED)
- CORNER OF THIS SUBDIVISION – SET SURVEY MARKER PER M.A.G. STD. DTL. 120, TYPE "B" – MODIFIED (UNLESS OTHERWISE NOTED)
- SECTION LINE
- MID-SECTION LINE
- BOUNDARY LINE
- LOT LINE
- CENTERLINE
- EASEMENT
- (1) SHEET NUMBER
- (1) SIGHT VISIBILITY EASEMENT (33' X 33')
- (2) EMERGENCY ACCESS EASEMENT
- P.U.E. PUBLIC UTILITY EASEMENT
- S.W.U.E. SIDEWALK AND PUBLIC UTILITY EASEMENT
- V.N.A.E. VEHICULAR NON ACCESS EASEMENT
- AC. ACRES
- L1 LINE NUMBER
- C1 CURVE NUMBER
- ** HEADLIGHT INTRUSION
- B.S.L. BUILDING SETBACK LINE
- C.O.B. CITY OF BUCKEYE
- M.C.R. MARICOPA COUNTY RECORDER
- DOC.# DOCUMENT NUMBER
- R/W RIGHT-OF-WAY
- W&S WATER AND SEWER
- S/B SETBACK
- S/W SIDEWALK

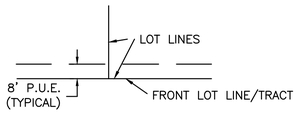

TYPICAL PUBLIC UTILITY EASEMENT DETAIL
(NOT-TO-SCALE)

LEGAL DESCRIPTION

THAT PART OF THE SOUTHWEST QUARTER OF SECTION 17, TOWNSHIP 1 NORTH, RANGE 3 WEST, OF THE GILA AND SALT RIVER MERIDIAN, MARICOPA COUNTY, ARIZONA, MORE PARTICULARLY DESCRIBED AS FOLLOWS:

COMMENCING AT THE BRASS CAP IN A HAND HOLE MARKING THE SOUTHWEST CORNER, FROM WHICH THE 3/4" REBAR WITH NO IDENTIFICATION MARKING THE SOUTH QUARTER CORNER OF SAID SECTION 17 BEARS NORTH 89°48'16" EAST, A DISTANCE OF 2,637.29 FEET;

THENCE NORTH 89°48'16" EAST, ALONG THE SOUTH LINE OF THE SOUTHWEST QUARTER, A DISTANCE OF 983.54 FEET;

THENCE NORTH 00°11'44" WEST, DEPARTING SAID SOUTH LINE, A DISTANCE OF 75.00 FEET TO THE TRUE POINT OF BEGINNING;

THENCE NORTH 00°01'01" EAST, A DISTANCE OF 957.98 FEET;
THENCE NORTH 69°13'11" EAST, A DISTANCE OF 120.36 FEET;
THENCE NORTH 68°06'06" EAST, A DISTANCE OF 432.66 FEET;
THENCE NORTH 64°30'17" EAST, A DISTANCE OF 145.00 FEET;
THENCE NORTH 69°59'57" EAST, A DISTANCE OF 469.13 FEET;
THENCE SOUTH 25°29'43" EAST, A DISTANCE OF 24.53 FEET;
THENCE SOUTH 00°03'37" WEST, A DISTANCE OF 398.12 FEET;
THENCE SOUTH 89°48'16" WEST, A DISTANCE OF 107.99 FEET;
THENCE SOUTH 00°03'37" WEST, A DISTANCE OF 339.64 FEET;
THENCE SOUTH 67°46'48" WEST, A DISTANCE OF 373.37 FEET;

THENCE SOUTH 00°03'37" WEST, A DISTANCE OF 481.27 FEET TO A POINT ON A LINE WHICH IS PARALLEL WITH, AND 75.00 FEET NORTHERLY, AS MEASURED AT RIGHT ANGLES, FROM SAID SOUTH LINE;

THENCE SOUTH 89°48'16" WEST, ALONG SAID PARALLEL LINE, A DISTANCE OF 641.62 FEET TO THE TRUE POINT OF BEGINNING.

CONTAINING 993,022 SQUARE FEET OR 22.797 ACRES, MORE OR LESS.

THE SUBJECT PROPERTY CONTAINS NO GAPS OR OVERLAPS WITH THE ADJOINING PROPERTIES.

Call at least two full working days before you begin excavation.
ARIZONA 811
Arizona Blue Stake, Inc.
Dial 8-1-1 or 1-800-STAKE-IT (782-5348)
In Maricopa County: (602) 263-1100

REVISIONS:

1

2

3

PLAN NAME

A FINAL PLAT OF HOMES AT SUSAN RANCH

ENGINEER INFORMATION
COE & VAN LOO CONSULTANTS, INC
PLANNING ENGINEERING LANDSCAPE ARCHITECTURE
4550 NORTH 12TH STREET
PHOENIX, ARIZONA 85014
TELEPHONE (602) 264-6831

SUBMITTAL: 5TH SUBMITTAL

COB PERMITTING APPROVED SEAL

COB ENGINEERING APPROVED SEAL

AS-BUILT SEAL

DESIGN SEAL

Registered Land Surveyor
CERTIFICATE NO.
33851
RICHARD G. ALCOCER
Date Signed 11/18/24
ARIZONA U.S.A.
EXPIRES: 06-30-26

ORIGINAL PLAN DATE: 11/18/24

LATEST REVISION DATE:

PROJECT NUMBER: CVL: 01-0344702

SHEET NUMBER: 2 OF 9

COB PLAN TRACKING #: PLZS-22-00021

COB PERMIT #:

Printed By: Dominique Print Date: November 18, 2024 Filename: \\phx-cvfiles4\Engr\data\01\0344702\CADD\DS-FPLAT 01-05.dwg

DEVELOPMENT STANDARDS	SF3 PAD
MINIMUM LOT SIZE	3,125 sf
MINIMUM LOT WIDTH	44'
FRONT SETBACK (LIVABLE)	5'
FRONT SETBACK (GARAGE)	20'
MINIMUM SIDE SETBACK	3'**
MINIMUM SIDE SETBACK (CORNER SITE)	3'
MINIMUM COMBINED SIDE SETBACK	8'
MINIMUM REAR SETBACK (LIVABLE)	8'
MINIMUM REAR SETBACK (PATIO)	5'
MAXIMUM LOT COVERAGE	65%***
MAXIMUM BUILDING HEIGHT	45'

*UP TO 10% OF THE LOTS ARE PERMITTED UP TO 30% INCREASE OR DECREASE IN ANY TWO (2) OF THE STANDARDS NOTED ABOVE, TO ALLOW FLEXIBILITY IN SITE PLANNING AND TO ADDRESS FIELD CONDITIONS
**FOR USE ON THE LOOP ROADSIDE OF LOT TYPE "A" (CORNER LOTS), AND THE INSIDE CORNER OF GARAGES FOR LOT TYPE "C"
***LOT COVERAGE AREA TO EXCLUDE UNENCLOSED ROOFED AREAS, SUCH AS FRONT PORCHES AND REAR PATIOS

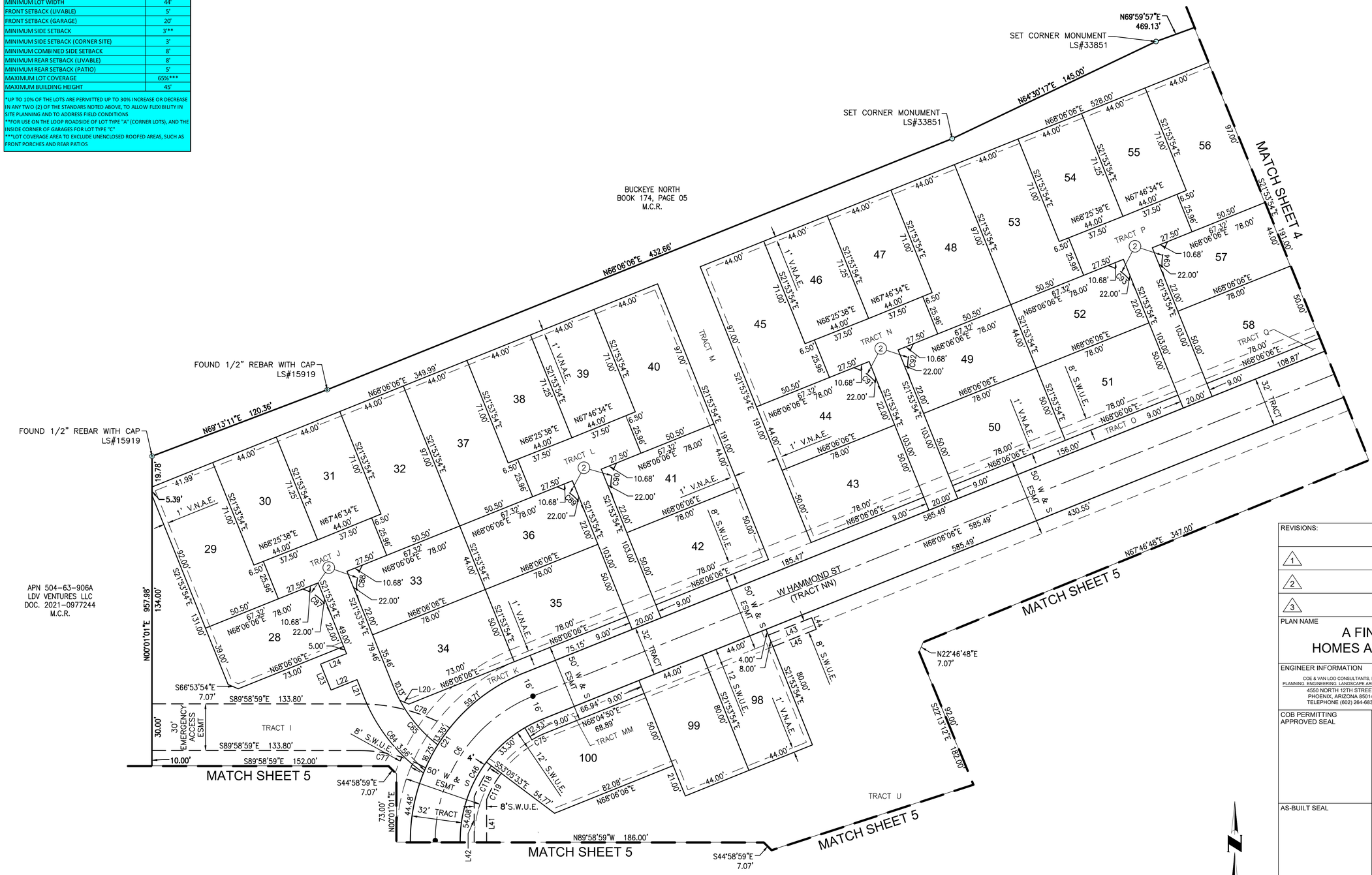

REVISIONS:
1
2
3

PLAN NAME

A FINAL PLAT OF HOMES AT SUSAN RANCH

ENGINEER INFORMATION
COE & VAN LOO CONSULTANTS, INC
PLANNING. ENGINEERING. LANDSCAPE ARCHITECTURE
4550 NORTH 12TH STREET
PHOENIX, ARIZONA 85014
TELEPHONE (602) 264-6831

COB PERMITTING APPROVED SEAL	COB ENGINEERING APPROVED SEAL
AS-BUILT SEAL	DESIGN SEAL

Registered Land Surveyor CERTIFICATE NO. 33851 RICHARD G. ALCOCER 11/18/24 Date Signed ARIZONA U.S.A. EXPIRES: 06-30-26

ORIGINAL PLAN DATE	LATEST REVISION DATE
11/18/24	
PROJECT NUMBER	SHEET NUMBER
CVL: 01-0344702	3 OF 9

SUBMITTAL: 5TH SUBMITTAL

COB PLAN TRACKING # PLZS-22-00021

COB PERMIT #

SCALE: 1" = 30'

Call at least two full working days before you begin excavation. ARIZONA 811 Arizona Blue Stake, Inc. Dial 8-1-1 or 1-800-STAKE-IT (782-5348) In Maricopa County: (602) 263-1100

Printed By: **Dominique** Print Date: **November 18, 2024** Filename: \\phx-cvlfiles4\Engrdata\01\0344702\CAD\DDS.FPLAT.01-05.dwg

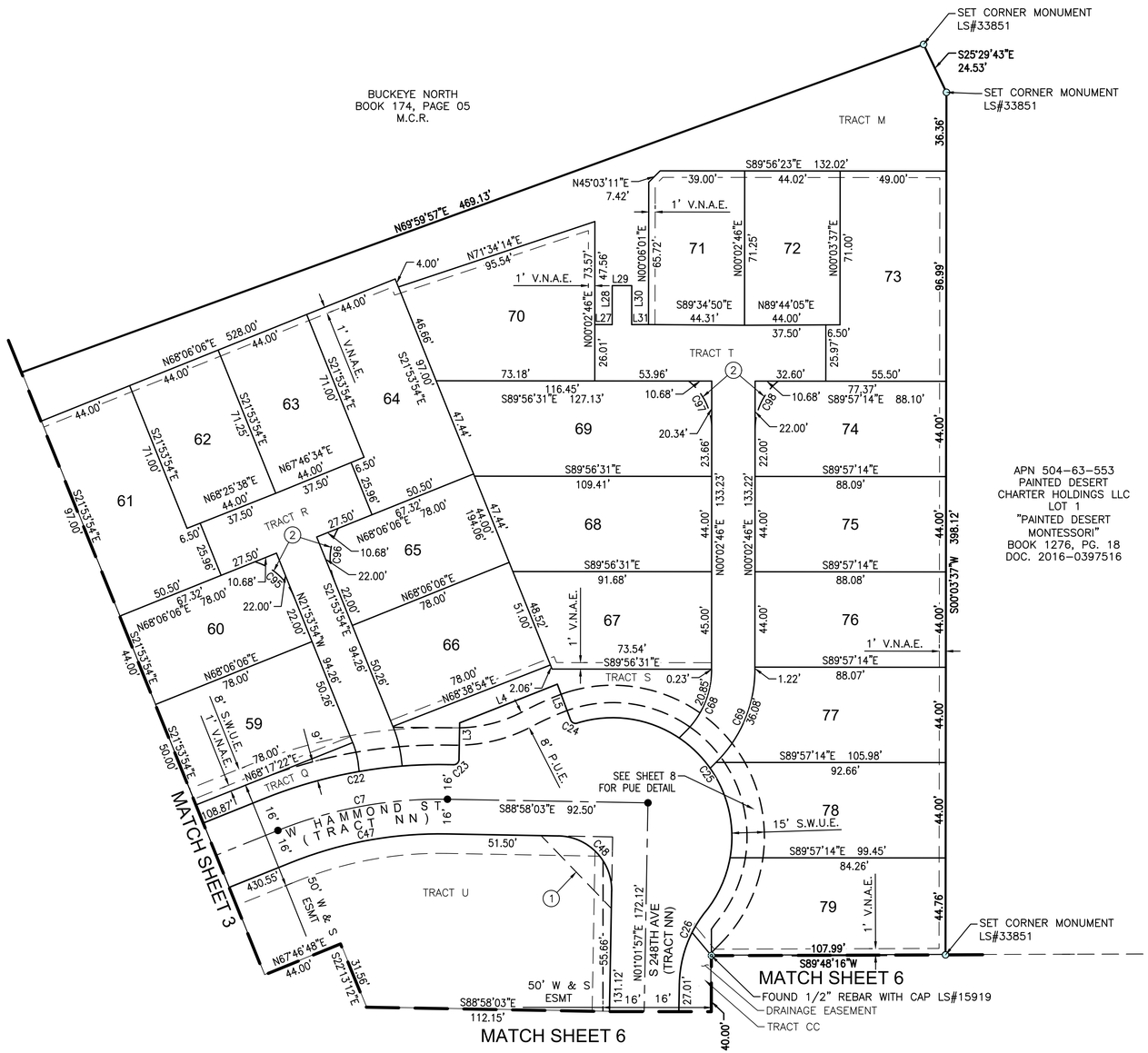

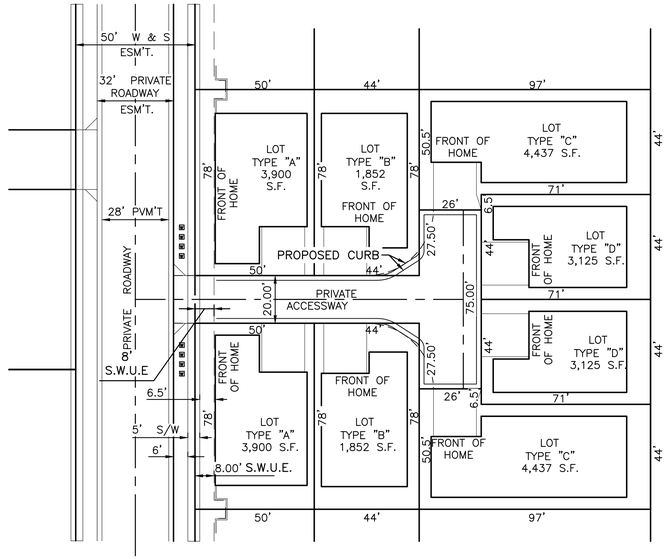

TYPICAL CLUSTER "POD"
LOT TYPE AND LOT DIMENSION DETAIL

* NOTE: ALL LOT DIMENSIONS SHOWN ARE MINIMUMS. LOT NOTES SHOWN ARE TYPICAL.

SEE SHEET 9 FOR CURVE TABLE, LINE TABLE, AND TRACT TABLE

REVISIONS:

1

2

3

PLAN NAME

A FINAL PLAT OF HOMES AT SUSAN RANCH

ENGINEER INFORMATION
COE & VAN LOO CONSULTANTS, INC
PLANNING ENGINEERING LANDSCAPE ARCHITECTURE
4550 NORTH 12TH STREET
PHOENIX, ARIZONA 85014
TELEPHONE (602) 264-6831

SUBMITTAL: 5TH SUBMITTAL

COB PERMITTING APPROVED SEAL	COB ENGINEERING APPROVED SEAL
AS-BUILT SEAL	DESIGN SEAL
ORIGINAL PLAN DATE: 11/18/24	LATEST REVISION DATE:
PROJECT NUMBER: CVL: 01-0344702	SHEET NUMBER: 4 OF 9

Registered Land Surveyor CERTIFICATE NO. 33851 RICHARD G. ALCOCER 11/18/24 Date Signed ARIZONA U.S.A. Expires 06-30-25

COB PLAN TRACKING #: PLZS-22-00021

COB PERMIT #:

30' 15' 0 30'
SCALE: 1" = 30'

Call at least two full working days before you begin excavation. ARIZONA 811 Arizona Blue Stake, Inc. Dial 8-1-1 or 1-800-STAKE-IT (782-5348) In Maricopa County: (602) 263-1100

Printed By: Dominique Print Date: November 18, 2024 Filename: \\phx-civilfile4\Engrdata\01\0344702\CADD\DS.FPLAT.01-05.dwg

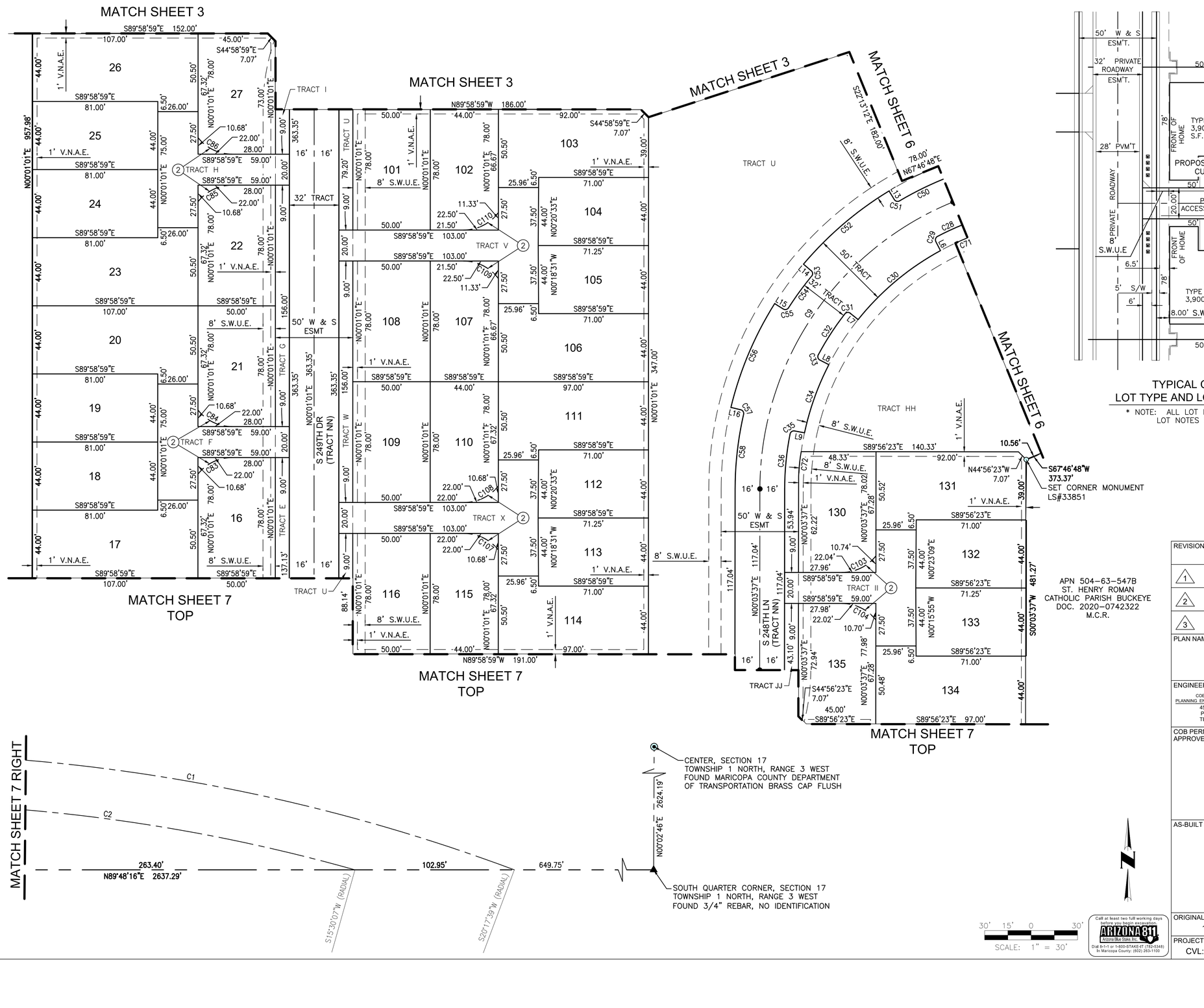

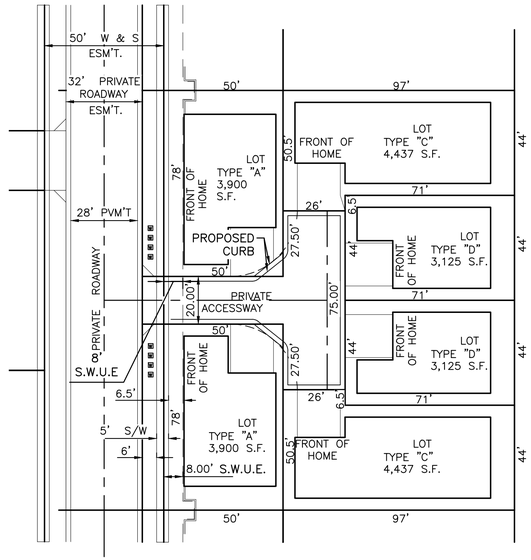

TYPICAL CLUSTER "POD"
LOT TYPE AND LOT DIMENSION DETAIL

* NOTE: ALL LOT DIMENSIONS SHOWN ARE MINIMUMS. LOT NOTES SHOWN ARE TYPICAL.

Call at least two full working days before you begin excavation. ARIZONA 811 Arizona Blue Stake, Inc. Dial 8-1-1 or 1-800-STAKE-IT (782-5348) In Maricopa County: (602) 263-1100

REVISIONS:
1
2
3

PLAN NAME
A FINAL PLAT OF HOMES AT SUSAN RANCH

ENGINEER INFORMATION
COE & VAN LOO CONSULTANTS, INC
PLANNING ENGINEERING LANDSCAPE ARCHITECTURE
4550 NORTH 12TH STREET
PHOENIX, ARIZONA 85014
TELEPHONE (602) 264-6831

COB PERMITTING APPROVED SEAL
COB ENGINEERING APPROVED SEAL
AS-BUILT SEAL
DESIGN SEAL
Registered Land Surveyor CERTIFICATE NO. 33851 RICHARD G. ALCOCER 11/18/24 Not Valid Without Signature ARIZONA U.S.A. EXPIRES: 06-30-26

SUBMITTAL: 5TH SUBMITTAL

ORIGINAL PLAN DATE: 11/18/24
LATEST REVISION DATE:
PROJECT NUMBER: CVL: 01-0344702
SHEET NUMBER: 5 OF 9

COB PLAN TRACKING #: PLZS-22-00021
COB PERMIT #:

Printed By: **Dominique** Print Date: **November 18, 2024** Filename: \\phx-cvlfile4\Engrdata\01\0344702\CADD\DS.FPLAT.01-05.dwg

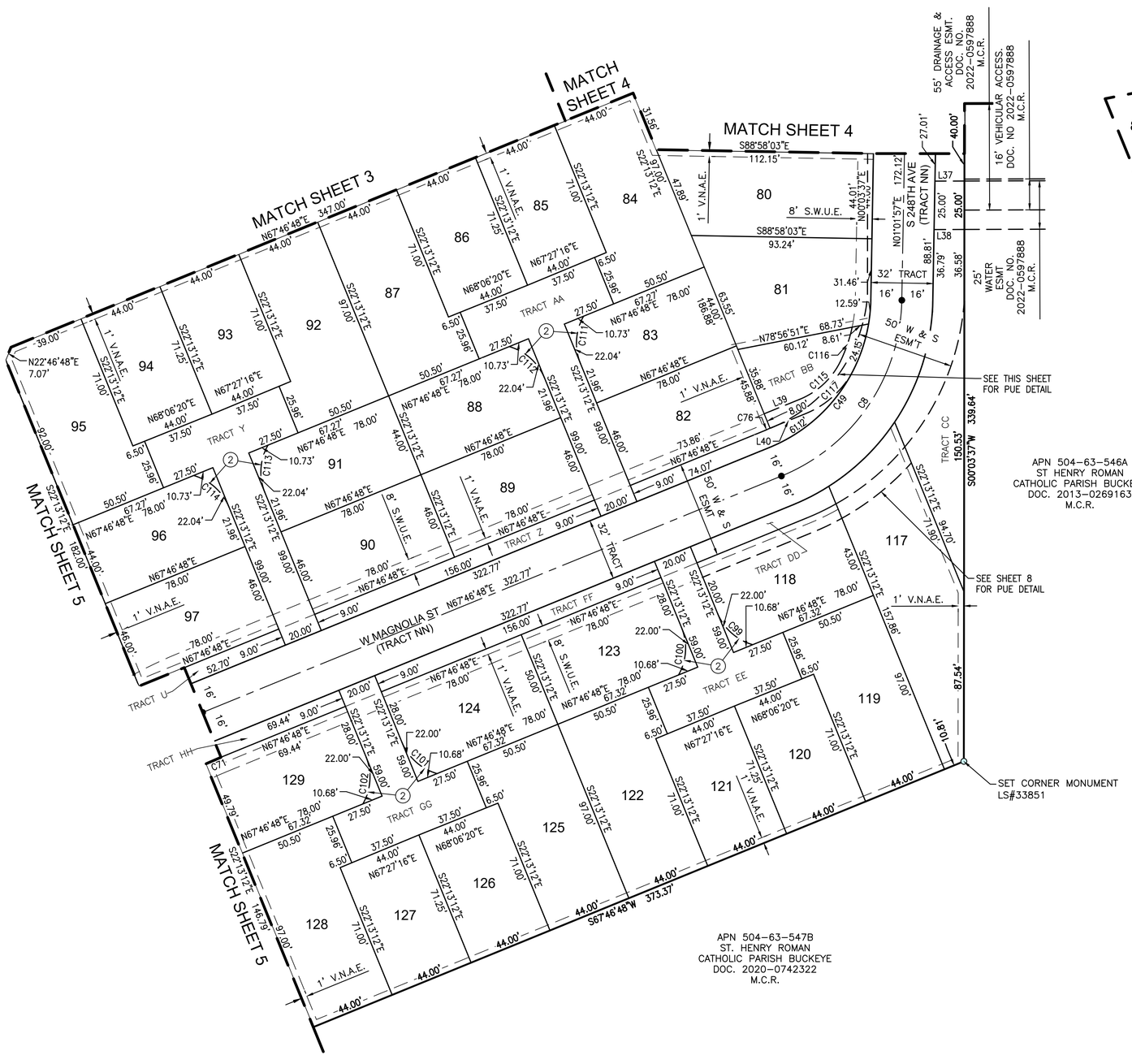

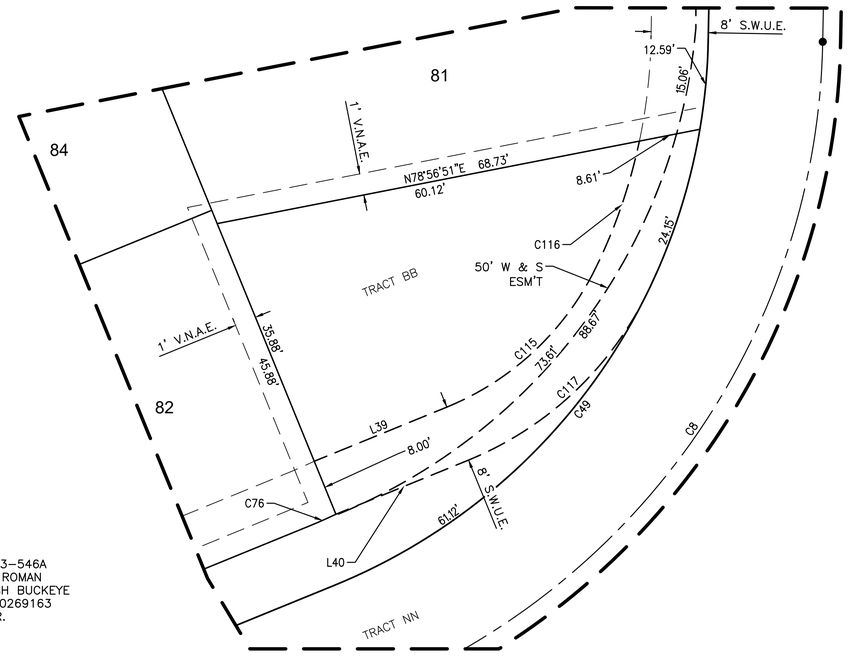

PUBLIC UTILITY EASEMENT DETAIL
(TRACT BB)
(SCALE = 1:10)

SEE SHEET 9 FOR CURVE TABLE, LINE TABLE, AND TRACT TABLE

REVISIONS:

1

2

3

PLAN NAME

A FINAL PLAT OF HOMES AT SUSAN RANCH

ENGINEER INFORMATION

COE & VAN LOO CONSULTANTS, INC
PLANNING, ENGINEERING, LANDSCAPE ARCHITECTURE
4550 NORTH 12TH STREET
PHOENIX, ARIZONA 85014
TELEPHONE (602) 264-6831

CVL

COB PERMITTING APPROVED SEAL	COB ENGINEERING APPROVED SEAL
AS-BUILT SEAL	DESIGN SEAL
ORIGINAL PLAN DATE: 11/18/24	LATEST REVISION DATE
PROJECT NUMBER: CVL: 01-0344702	SHEET NUMBER: 6 OF 9

Registered Land Surveyor
CERTIFICATE NO.
33851
RICHARD C. ALCOCER
11/18/24
ARIZONA
Expires: 09-30-26

SUBMITTAL: 5TH SUBMITTAL

COB PLAN TRACKING #: PLZS-22-00021

COB PERMIT #:

30' 15' 0 30'
SCALE: 1" = 30'

Call at least two full working days before you begin excavation.
ARIZONA 811
Arizona Blue Stake, Inc.
Dial 8-1-1 or 1-800-STAKE-IT (782-5348)
In Maricopa County: (602) 263-1100

Printed By: **Dominique** Print Date: **November 18, 2024** Filename: \\phx-coffile4\Engdata\01\0344702\CADD\DS FPLAT 01-05.dwg

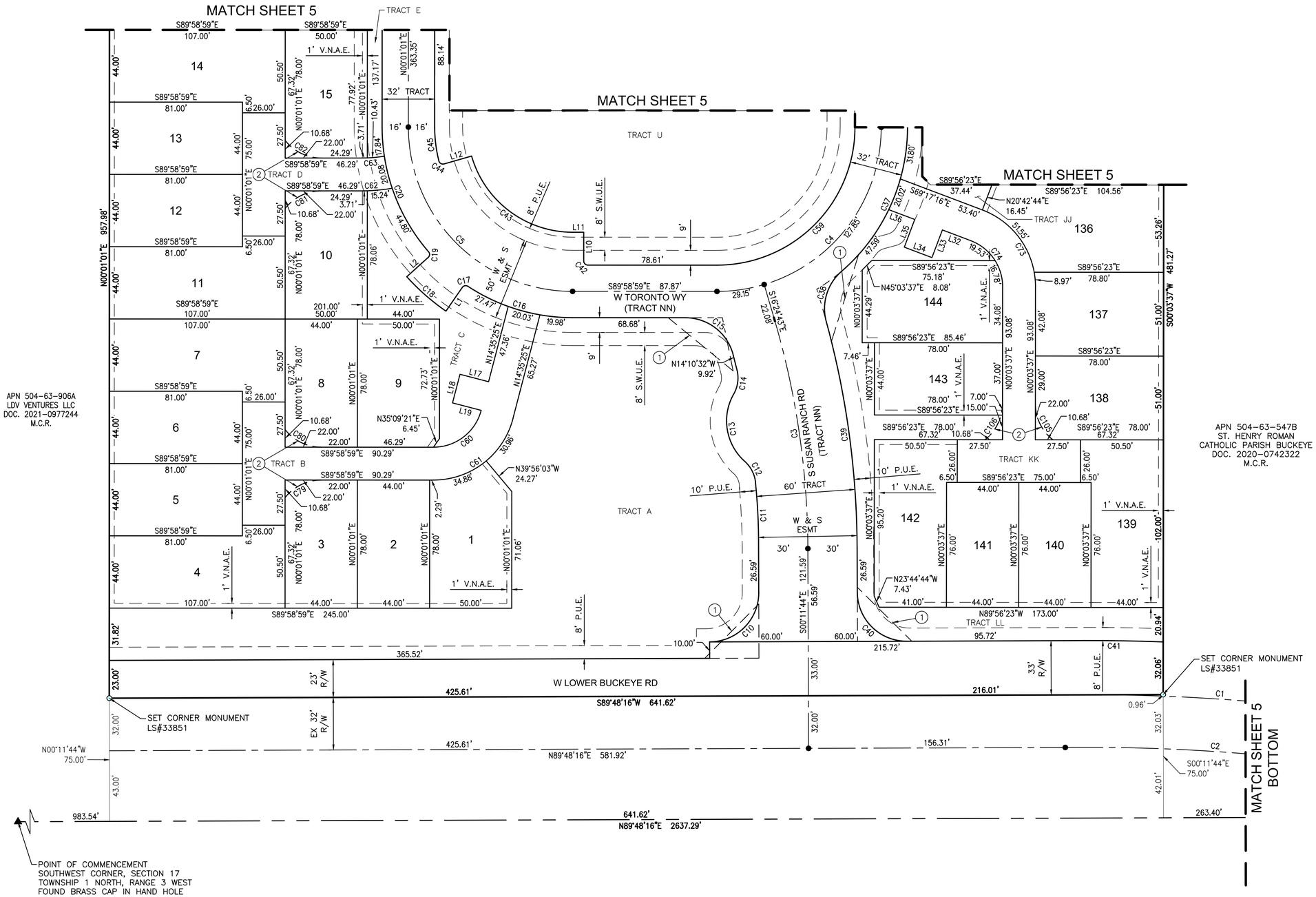

SEE SHEET 9 FOR CURVE TABLE, LINE TABLE, AND TRACT TABLE

REVISIONS:
1
2
3

PLAN NAME

A FINAL PLAT OF HOMES AT SUSAN RANCH

ENGINEER INFORMATION

COE & VAN LOO CONSULTANTS, INC
PLANNING ENGINEERING LANDSCAPE ARCHITECTURE
4550 NORTH 12TH STREET
PHOENIX, ARIZONA 85014
TELEPHONE (602) 264-6831

COB PERMITTING APPROVED SEAL	COB ENGINEERING APPROVED SEAL
AS-BUILT SEAL	DESIGN SEAL
ORIGINAL PLAN DATE: 11/18/24	LATEST REVISION DATE
PROJECT NUMBER: CVL: 01-0344702	SHEET NUMBER: 7 OF 9

SUBMITTAL: 5TH SUBMITTAL

COB PLAN TRACKING #: PLZS-22-00021

COB PERMIT #

Call at least two full working days before you begin excavation. ARIZONA 811 Arizona Blue Stake, Inc. Dial 8-1-1 or 1-800-STAKE-IT (782-5348) In Maricopa County: (602) 263-1100

Printed By: **Dominique** Print Date: **November 19, 2024** Filename: \\phx-cvlfile4\Engrdata\01\0344702\CADD\DS FPLAT 01-05.dwg

PUBLIC UTILITY EASEMENT DETAIL
(TRACT S, T, CC & LOTS 77, 78, 79)

(SCALE = 1:10)

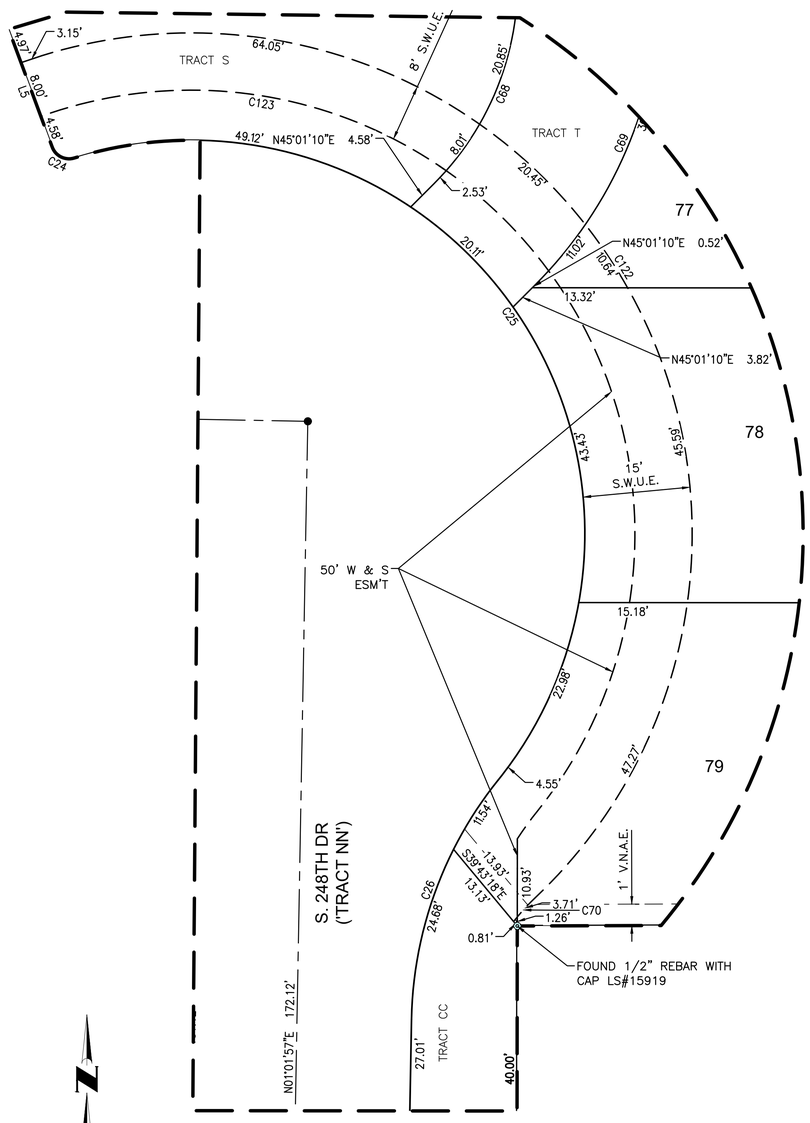

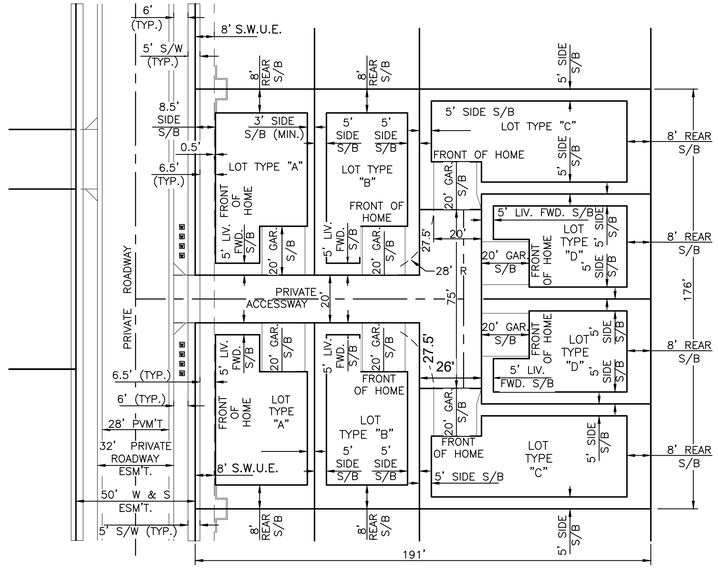

TYPICAL CLUSTER "POD"
LOT SETBACK AND DIMENSION DETAIL

* NOTE: ALL SETBACKS, DIMENSIONS, NOTES, ETC. SHOWN ARE TYPICAL, AND APPLY TO ALL LOTS.

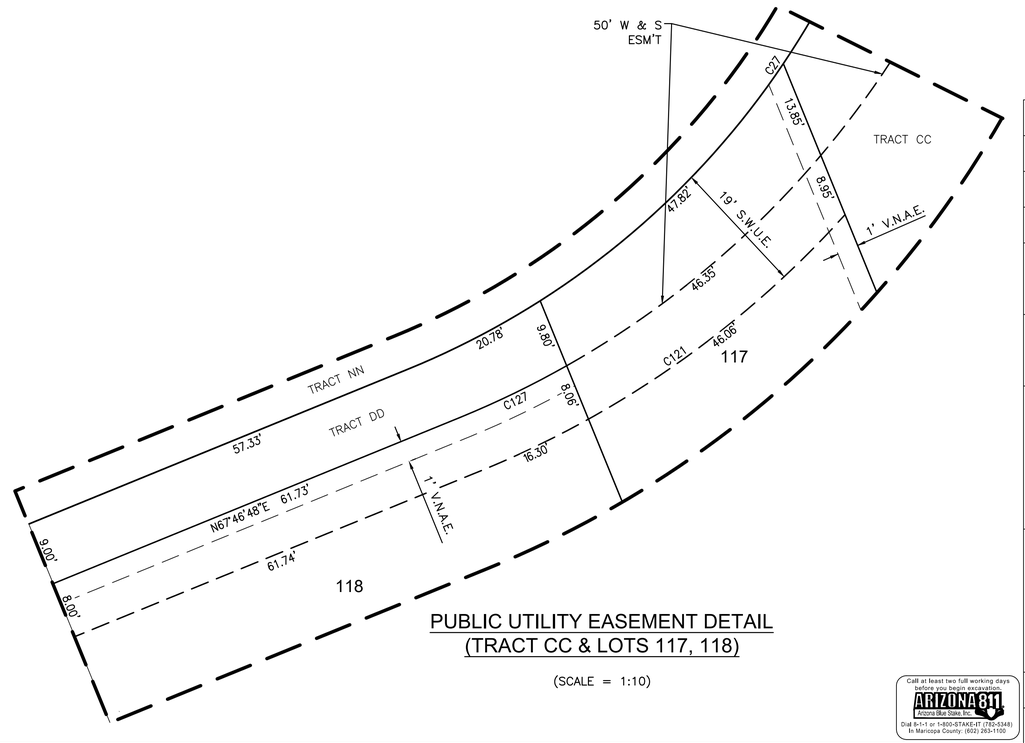

PUBLIC UTILITY EASEMENT DETAIL
(TRACT CC & LOTS 117, 118)

(SCALE = 1:10)

SEE SHEET 9 FOR CURVE TABLE, LINE TABLE, AND TRACT TABLE

REVISIONS:

1

2

3

PLAN NAME

A FINAL PLAT OF HOMES AT SUSAN RANCH

ENGINEER INFORMATION
COE & VAN LOO CONSULTANTS, INC
PLANNING ENGINEERING LANDSCAPE ARCHITECTURE
4550 NORTH 12TH STREET
PHOENIX, ARIZONA 85014
TELEPHONE (602) 264-6831

COB PERMITTING APPROVED SEAL	COB ENGINEERING APPROVED SEAL
AS-BUILT SEAL	DESIGN SEAL
ORIGINAL PLAN DATE: 11/18/24	LATEST REVISION DATE:
PROJECT NUMBER: CVL: 01-0344702	SHEET NUMBER: 8 OF 9

Registered Land Surveyor CERTIFICATE NO. 33851 RICHARD G. ALCOCER 11/18/24 Date Signed ARIZONA U.S.A. EXPIRES: 06-30-26

SUBMITTAL: 5TH SUBMITTAL

COB PLAN TRACKING # PLZS-22-00021

COB PERMIT #

Call at least two full working days before you begin excavation. ARIZONA 811 Arizona Blue Stake, Inc. Dial 8-1-1 or 1-800-STAKE-IT (782-5348) In Maricopa County: (602) 263-1100

Printed By: **Dominique** Print Date: **November 18, 2024** Filename: \\phx-cvlfile\Engdata\0103447\02\CADD\DS.FPLAT 01-05.dwg

CURVE TABLE						
NO.	LENGTH	RADIUS	DELTA	TANGENT	CHORD	CHORD-BEARING
C1	435.33'	1186.29'	021°01'33"	220.14	432.89	N80°13'07"W
C2	327.04'	1154.29'	016°14'01"	164.62	325.95	N82°36'54"W
C3	141.52'	500.00'	016°12'59"	71.23	141.04	N08°18'14"W
C4	157.00'	100.00'	089°57'24"	99.92	141.37	N45°02'19"E
C5	157.08'	100.00'	090°00'00"	100.00	141.42	S44°58'59"E
C6	118.83'	100.00'	068°05'05"	67.56	111.96	S34°03'33"W
C7	80.04'	200.00'	022°55'51"	40.56	79.51	S79°34'01"W
C8	116.50'	100.00'	066°44'51"	65.87	110.02	N34°24'22"E
C9	236.98'	200.50'	067°43'11"	134.53	223.42	S33°55'12"W
C10	47.12'	30.00'	089°59'56"	30.00	42.43	N44°48'14"E
C11	40.12'	376.86'	006°05'56"	20.08	40.10	N02°38'25"W
C12	15.07'	20.00'	043°09'59"	7.91	14.71	N26°40'06"W
C13	44.83'	33.00'	077°50'25"	26.65	41.46	S09°19'53"E
C14	15.06'	20.00'	043°08'29"	7.91	14.71	N08°01'55"E
C15	39.38'	30.00'	075°12'10"	23.10	36.61	N52°22'54"W
C16	67.47'	116.00'	033°19'32"	34.72	66.52	S73°19'13"E
C17	3.87'	2.50'	088°47'28"	2.45	3.50	S78°56'49"W
C18	31.80'	136.00'	013°23'50"	15.97	31.73	S48°45'00"E
C19	3.87'	2.50'	088°47'26"	2.45	3.50	N03°33'12"E
C20	82.72'	116.00'	040°51'34"	43.21	80.98	S20°24'46"E
C21	137.84'	116.00'	068°05'05"	78.37	129.87	S34°03'33"W
C22	86.45'	216.00'	022°55'51"	43.81	85.87	S79°34'01"W
C23	3.93'	2.50'	090°00'00"	2.50	3.54	N46°01'57"E
C24	3.80'	2.50'	087°00'33"	2.37	3.44	S63°46'52"E
C25	140.20'	55.00'	146°02'52"	180.17	105.21	N34°15'43"W
C26	36.22'	55.00'	037°43'46"	18.79	35.57	S19°53'50"W
C27	135.14'	116.00'	066°44'51"	76.41	127.62	N34°24'22"E
C28	17.67'	184.50'	005°29'16"	8.84	17.66	S65°02'10"W
C29	3.90'	2.50'	089°22'14"	2.47	3.52	S17°36'25"W
C30	69.84'	175.50'	022°48'03"	35.39	69.38	S50°03'08"W
C31	3.97'	2.50'	090°56'40"	2.54	3.56	S83°20'35"W
C32	31.53'	184.50'	009°47'27"	15.80	31.49	S32°58'32"W
C33	3.97'	2.50'	090°56'40"	2.54	3.56	S17°23'31"E
C34	46.89'	175.50'	015°18'27"	23.58	46.75	S19°38'42"W
C35	3.90'	2.50'	089°22'13"	2.47	3.52	S55°50'13"W
C36	35.72'	184.50'	011°05'29"	17.91	35.66	S05°36'22"W
C37	99.41'	116.00'	049°06'05"	52.99	96.40	N24°36'39"E
C38	33.75'	30.00'	064°27'48"	18.92	32.00	S16°55'47"W
C39	139.74'	530.00'	015°06'23"	70.28	139.33	N07°44'55"W
C40	47.12'	30.00'	090°00'00"	30.00	42.43	S45°11'44"E
C41	60.44'	1223.55'	002°49'49"	30.23	60.44	N89°18'29"W
C42	3.93'	2.50'	090°00'00"	2.50	3.54	S44°58'59"E
C43	82.66'	64.00'	073°59'51"	48.23	77.03	S52°59'04"E
C44	4.00'	2.50'	091°45'28"	2.58	3.59	S60°06'24"E
C45	20.88'	84.00'	014°14'41"	10.50	20.83	S07°06'19"E
C46	99.82'	84.00'	068°05'05"	56.75	94.05	S34°03'33"W
C47	73.64'	184.00'	022°55'51"	37.32	73.15	S79°34'01"W
C48	39.27'	25.00'	090°00'00"	25.00	35.36	N43°58'03"W
C49	97.86'	84.00'	066°44'51"	55.33	92.42	N34°24'22"E
C50	31.75'	216.50'	008°24'07"	15.90	31.72	S63°34'45"W
C51	3.89'	2.50'	089°12'54"	2.47	3.51	S76°00'52"E
C52	73.07'	225.50'	018°33'56"	36.86	72.75	S49°26'15"W
C53	3.89'	2.50'	089°12'54"	2.47	3.51	N05°06'39"W
C54	25.35'	216.50'	006°42'33"	12.69	25.34	S36°08'32"W
C55	3.89'	2.50'	089°12'54"	2.47	3.51	N77°23'42"E
C56	73.07'	225.50'	018°33'56"	36.86	72.75	S22°50'49"W

CURVE TABLE						
NO.	LENGTH	RADIUS	DELTA	TANGENT	CHORD	CHORD-BEARING
C57	3.89'	2.50'	089°12'54"	2.47	3.51	N31°42'05"W
C58	48.54'	216.50'	012°50'45"	24.37	48.44	S06°29'00"W
C59	131.88'	84.00'	089°57'24"	83.94	118.75	N45°02'19"E
C60	39.51'	30.00'	075°27'41"	23.21	36.72	N52°19'15"E
C61	65.84'	50.00'	075°26'51"	38.68	61.19	N52°18'50"E
C62	18.94'	110.00'	009°52'02"	9.50	18.92	N85°05'00"E
C63	14.13'	90.00'	008°59'54"	7.08	14.12	N85°31'04"E
C64	62.42'	110.00'	032°30'51"	32.08	61.59	S38°09'19"E
C65	48.04'	90.00'	030°35'10"	24.61	47.48	S37°11'29"E
C66	10.24'	40.00'	014°39'56"	5.15	10.21	N14°33'56"W
C67	15.36'	60.00'	014°39'59"	7.72	15.32	N14°33'56"W
C68	31.40'	40.00'	044°58'24"	16.56	30.60	N22°31'58"E
C69	47.10'	60.00'	044°58'24"	24.84	45.90	N22°31'58"E
C70	4.53'	30.00'	008°39'24"	2.27	4.53	S42°16'38"W
C71	8.57'	175.50'	002°47'48"	4.28	8.57	S66°22'54"W
C72	15.94'	115.60'	007°54'01"	7.98	15.93	S06°03'48"W
C73	60.52'	50.00'	069°20'54"	34.59	56.89	N34°36'50"W
C74	36.31'	30.00'	069°20'53"	20.75	34.13	N34°36'50"W
C75	9.15'	75.00'	006°59'22"	4.58	9.14	S63°07'09"W
C76	4.15'	75.00'	003°10'04"	2.07	4.15	N66°10'59"E
C77	43.93'	85.00'	029°36'46"	22.47	43.44	N75°10'36"W
C78	60.25'	115.00'	030°00'57"	30.83	59.56	N74°58'30"W
C79	25.31'	28.00'	051°47'12"	13.59	24.46	S64°07'25"W
C80	25.31'	28.00'	051°47'12"	13.59	24.46	S64°05'23"E
C81	25.31'	28.00'	051°47'12"	13.59	24.46	S64°07'25"W
C82	25.31'	28.00'	051°47'12"	13.59	24.46	S64°05'23"E
C83	25.31'	28.00'	051°47'12"	13.59	24.46	S64°07'25"W
C84	25.31'	28.00'	051°47'12"	13.59	24.46	S64°05'23"E
C85	25.31'	28.00'	051°47'12"	13.59	24.46	S64°07'25"W
C86	25.31'	28.00'	051°47'12"	13.59	24.46	S64°05'23"E
C87	25.31'	28.00'	051°47'12"	13.59	24.46	N47°47'30"W
C88	25.31'	28.00'	051°47'12"	13.59	24.46	S03°59'42"W
C89	25.31'	28.00'	051°47'12"	13.59	24.46	N47°47'30"W
C90	25.31'	28.00'	051°47'12"	13.59	24.46	S03°59'42"W
C91	25.31'	28.00'	051°47'12"	13.59	24.46	N47°47'30"W
C92	25.31'	28.00'	051°47'12"	13.59	24.46	S03°59'42"W
C93	25.31'	28.00'	051°47'12"	13.59	24.46	N47°47'30"W
C94	25.31'	28.00'	051°47'12"	13.59	24.46	S03°59'42"W
C95	25.31'	28.00'	051°47'12"	13.59	24.46	N47°47'30"W
C96	25.31'	28.00'	051°47'12"	13.59	24.46	S03°59'42"W
C97	23.68'	28.00'	048°26'59"	12.60	22.98	N27°39'24"W
C98	25.31'	28.00'	051°47'11"	13.59	24.45	S25°56'21"W
C99	25.31'	28.00'	051°47'12"	13.59	24.46	S48°06'48"E
C100	25.31'	28.00'	051°47'12"	13.59	24.46	N03°40'24"E
C101	25.31'	28.00'	051°47'12"	13.59	24.46	S48°06'48"E
C102	25.31'	28.00'	051°47'12"	13.59	24.46	N03°40'24"E
C103	25.38'	28.00'	051°55'58"	13.64	24.52	N64°03'02"E
C104	25.33'	28.00'	051°49'44"	13.60	24.47	N64°04'07"W
C105	25.31'	28.00'	051°47'12"	13.59	24.46	S25°49'59"E
C106	25.31'	28.00'	051°47'12"	13.59	24.46	N25°57'13"E
C107	25.31'	28.00'	051°47'12"	13.59	24.46	N64°05'23"W
C108	25.31'	28.00'	051°47'12"	13.59	24.46	N64°07'25"E
C109	26.13'	28.00'	053°28'21"	14.10	25.19	N63°14'48"W
C110	26.13'	28.00'	053°28'21"	14.10	25.19	N63°16'50"E
C111	25.37'	28.00'	051°54'28"	13.63	24.51	S03°44'02"W
C112	25.37'	28.00'	051°54'28"	13.63	24.51	N48°10'26"W

CURVE TABLE						
NO.	LENGTH	RADIUS	DELTA	TANGENT	CHORD	CHORD-BEARING
C113	25.37'	28.00'	051°54'28"	13.63	24.51	S03°44'02"W
C114	25.37'	28.00'	051°54'28"	13.63	24.51	N48°10'26"W
C115	29.10'	40.00'	041°41'13"	15.23	28.47	N46°56'11"E
C116	18.81'	76.00'	014°10'53"	9.45	18.76	N19°00'09"E
C117	34.92'	48.00'	041°41'13"	18.28	34.16	N46°56'11"E
C118	23.08'	80.00'	016°31'35"	11.62	23.00	S28°38'39"W
C119	19.37'	72.00'	015°24'44"	9.74	19.31	S29°12'05"W
C120	129.42'	131.13'	056°32'46"	70.53	124.23	N32°13'41"E
C121	62.36'	139.13'	025°40'52"	31.71	61.84	N54°47'35"E
C122	188.01'	70.00'	153°53'28"	301.90	136.38	N30°20'25"W
C123	59.40'	62.00'	054°53'29"	32.20	57.15	N82°22'08"W
C124	18.15'	148.72'	006°59'32"	9.09	18.14	S65°33'07"W
C125	36.92'	73.00'	028°58'36"	18.86	36.53	S76°32'39"W
C126	82.52'	225.00'	021°00'53"	41.73	82.06	S80°31'30"W
C127	16.31'	131.13'	007°07'42"	8.17	16.30	N64°03'54"E

TRACT TABLE			
TRACT	AREA (SQUARE FEET)	AREA (ACRES)	DESCRIPTION
TRACT A	36,528	0.839	LANDSCAPE / OPEN SPACE / RETENTION / PEDESTRIAN ACCESS / WATER METERS / UTILITIES / DRAINAGE/ WATER & SEWER ESM'T / SIGHT VISIBILITY ESM'T
TRACT AA	3,919	0.090	PRIVATE ACCESSWAY/ PEDESTRIAN ACCESS / UTILITIES/ WATER & SEWER ESM'T
TRACT B	6,434	0.148	PRIVATE ACCESSWAY/ PEDESTRIAN ACCESS / UTILITIES/ WATER & SEWER ESM'T
TRACT BB	2,995	0.069	LANDSCAPE / PEDESTRIAN ACCESS / WATER METERS / UTILITIES/ WATER & SEWER ESM'T
TRACT C	4,788	0.110	LANDSCAPE / PEDESTRIAN ACCESS / WATER METERS / UTILITIES/ WATER & SEWER ESM'T
TRACT CC	4,633	0.106	LANDSCAPE / PEDESTRIAN ACCESS / WATER / UTILITIES / DRAINAGE / EMERGENCY ACCESS/ WATER & SEWER ESM'T
TRACT D	3,201	0.073	PRIVATE ACCESSWAY/ PEDESTRIAN ACCESS / UTILITIES/ WATER & SEWER ESM'T
TRACT DD	703	0.016	PRIVATE ACCESSWAY/ PEDESTRIAN ACCESS / WATER METERS / UTILITIES/ WATER & SEWER ESM'T
TRACT E	1,409	0.032	LANDSCAPE / PEDESTRIAN ACCESS / WATER METERS / UTILITIES/ WATER & SEWER ESM'T
TRACT EE	3,119	0.072	PRIVATE ACCESSWAY/ PEDESTRIAN ACCESS / UTILITIES/ WATER & SEWER ESM'T
TRACT F	3,130	0.072	PRIVATE ACCESSWAY/ PEDESTRIAN ACCESS / UTILITIES/ WATER & SEWER ESM'T
TRACT FF	1,404	0.032	PRIVATE ACCESSWAY/ PEDESTRIAN ACCESS / WATER METERS / UTILITIES/ WATER & SEWER ESM'T
TRACT G	1,404	0.032	LANDSCAPE / PEDESTRIAN ACCESS / WATER METERS / UTILITIES/ WATER & SEWER ESM'T
TRACT GG	3,119	0.072	PRIVATE ACCESSWAY/ PEDESTRIAN ACCESS / UTILITIES/ WATER & SEWER ESM'T
TRACT H	3,130	0.072	PRIVATE ACCESSWAY/ PEDESTRIAN ACCESS / UTILITIES/ WATER & SEWER ESM'T
TRACT HH	14,819	0.340	PRIVATE ACCESSWAY/ PEDESTRIAN ACCESS / WATER METERS / RETENTION / UTILITIES / DRAINAGE/ WATER & SEWER ESM'T
TRACT I	12,078	0.277	LANDSCAPE / EMERGENCY ACCESS / OPEN SPACE / PEDESTRIAN ACCESS / WATER METERS / UTILITIES/ WATER & SEWER ESM'T
TRACT II	3,119	0.072	PRIVATE ACCESSWAY/ PEDESTRIAN ACCESS / UTILITIES/ WATER & SEWER ESM'T
TRACT J	4,951	0.114	PRIVATE ACCESSWAY / EMERGENCY ACCESS / PEDESTRIAN ACCESS / UTILITIES/ WATER & SEWER ESM'T
TRACT JJ	1,117	0.026	LANDSCAPE / PEDESTRIAN ACCESS / WATER METERS / UTILITIES/ WATER & SEWER ESM'T
TRACT K	1,997	0.046	LANDSCAPE / PEDESTRIAN ACCESS / WATER METERS / UTILITIES/ WATER & SEWER ESM'T
TRACT KK	6,166	0.142	LANDSCAPE / PRIVATE ACCESSWAY/ PEDESTRIAN ACCESS / UTILITIES / WATER & SEWER ESM'T
TRACT L	3,999	0.092	PRIVATE ACCESSWAY/ PEDESTRIAN ACCESS / UTILITIES / WATER & SEWER ESM'T / SIGHT VISIBILITY ESM'T
TRACT LL	9,256	0.212	LANDSCAPE/ WATER METERS / UTILITIES / WATER & SEWER ESM'T
TRACT M	32,899	0.755	LANDSCAPE / PED. ACCESS / OPEN SPACE / RETENTION / DRAINAGE ESMT. / WATER METERS / UTILITIES / WATER & SEWER ESM'T
TRACT MM	709	0.016	LANDSCAPE / PEDESTRIAN ACCESS / UTILITIES / WATER & SEWER ESM'T
TRACT N	3,999	0.092	PRIVATE ACCESSWAY / PEDESTRIAN ACCESS / UTILITIES / WATER & SEWER ESM'T
TRACT NN	106,013	2.434	PRIVATE ROADWAY ESM'T / WATER & SEWER ESM'T / UTILITIES / DRAINAGE ESMT.
TRACT O	1,404	0.032	LANDSCAPE / PEDESTRIAN ACCESS / WATER METERS / UTILITIES / WATER & SEWER ESM'T
TRACT P	3,999	0.092	PRIVATE ACCESSWAY/ PEDESTRIAN ACCESS / UTILITIES / WATER & SEWER ESM'T
TRACT Q	1,465	0.034	LANDSCAPE / PEDESTRIAN ACCESS / WATER METERS / UTILITIES / WATER & SEWER ESM'T
TRACT R	4,146	0.095	PRIVATE ACCESSWAY/ PEDESTRIAN ACCESS / UTILITIES / WATER & SEWER ESM'T
TRACT S	2,792	0.064	LANDSCAPE / PEDESTRIAN ACCESS / WATER METERS / UTILITIES / WATER & SEWER ESM'T
TRACT T	6,450	0.148	PRIVATE ACCESSWAY/ PEDESTRIAN ACCESS / UTILITIES / WATER & SEWER ESM'T
TRACT U	100,733	2.313	LANDSCAPE / OPEN SPACE / RETENTION / PEDESTRIAN ACCESS / WATER METERS / DRAINAGE / UTILITIES / WATER & SEWER ESM'T
TRACT V	3,999	0.092	PRIVATE ACCESSWAY/ PEDESTRIAN ACCESS / UTILITIES / WATER & SEWER ESM'T
TRACT W	1,404	0.032	LANDSCAPE / PEDESTRIAN ACCESS / UTILITIES / WATER & SEWER ESM'T
TRACT X	3,999	0.092	LANDSCAPE / PEDESTRIAN ACCESS / UTILITIES / WATER & SEWER ESM'T
TRACT Y	3,919	0.090	LANDSCAPE / PEDESTRIAN ACCESS / UTILITIES / WATER & SEWER ESM'T
TRACT Z	1,404	0.032	LANDSCAPE / PEDESTRIAN ACCESS / WATER METERS / UTILITIES / WATER & SEWER ESM'T
TOTAL	416,754	9.567	

LINE TABLE		
NO.	BEARING	LENGTH
L1	S34°33'05"W	17.53'
L2	N47°56'55"E	17.53'
L3	N01°01'57"E	16.83'
L4	N68°20'38"E	48.47'
L5	S20°16'35"E	17.55'
L6	N27°04'42"W	6.55'
L7	S51°10'29"E	6.48'
L8	N62°51'52"W	6.48'
L9	S79°28'41"E	6.55'
L10	S00°01'01"W	17.50'
L11	S89°58'59"E	6.76'
L12	N74°00'52"E	17.46'
L13	N31°24'25"W	6.52'
L14	S49°43'06"E	6.52'
L15	N57°59'51"W	6.52'
L16	S76°18'32"E	6.52'
L17	N75°24'35"W	18.00'
L18	S14°35'25"W	18.00'
L19	S75°24'35"E	18.00'
L20	S66°53'54"E	6.27'
L21	S21°53'54"E	12.46'
L22	S68°06'06"W	18.00'
L23	N21°53'54"W	18.00'

LINE TABLE		
NO.	BEARING	LENGTH
L24	N68°06'06"E	18.00'
L25	N07°13'58"W	3.46'
L26	N07°13'58"W	3.46'
L27	S89°56'23"E	8.00'
L28	N00°02'46"E	18.00'
L29	S89°56'23"E	9.00'
L30	S00°02'46"W	18.00'
L31	N89°51'15"E	7.75'
L32	S69°17'16"E	18.47'
L33	N20°42'44"E	18.00'
L34	S69°17'16"E	18.00'
L35	S20°42'44"W	18.00'
L36	S69°17'16"E	16.93'
L37	S89°48'16"W	15.22'
L38	N89°48'16"E	15.65'
L39	N67°46'48"E	20.01'
L40	N67°46'48"E	20.01'
L41	N00°01'01"E	27.57'
L42	N00°01'01"E	29.04'
L43	S68°06'06"W	30.00'
L44	N21°53'54"W	8.00'
L45	N68°06'06"E	30.00'

RIGHT-OF-WAY AREAS		
STREET NAME	AREA (SQUARE FEET)	AREA (ACRES)
LOWER BUCKEYE RD	17,514	0.402

Call at least two full working days before you begin excavation.
ARIZONA 811 Arizona Blue Stake, Inc.
Dial 8-1-1 or 1-800-STAKE-IT (782-5348)
In Maricopa County: (602) 263-1100

REVISIONS:

1

2

3

PLAN NAME

A FINAL PLAT OF HOMES AT SUSAN RANCH

ENGINEER INFORMATION

COE & VAN LOO CONSULTANTS, INC
PLANNING. ENGINEERING. LANDSCAPE ARCHITECTURE
4550 NORTH 12TH STREET
PHOENIX, ARIZONA 85014
TELEPHONE (602) 264-6831

CVL

COB PERMITTING APPROVED SEAL	COB ENGINEERING APPROVED SEAL
AS-BUILT SEAL	DESIGN SEAL

Registered Land Surveyor
CERTIFICATE NO.
33851
RICHARD G. ALCOCER
Date Signed 11/18/24
ARIZONA U.S.A.
EXPIRES: 06-30-26

ORIGINAL PLAN DATE 11/18/24	LATEST REVISION DATE
PROJECT NUMBER CVL: 01-0344702	SHEET NUMBER 9 OF 9

SUBMITTAL: 5TH SUBMITTAL

COB PLAN TRACKING # PLZS-22-00021

COB PERMIT #

Printed By: **Dominique** Print Date: **November 18, 2024** Filename: \\phx-cvlfiles4\Engrdata\01034470\2\CADD\DS.FPLAT.01-05.dwg

Vicinity Map

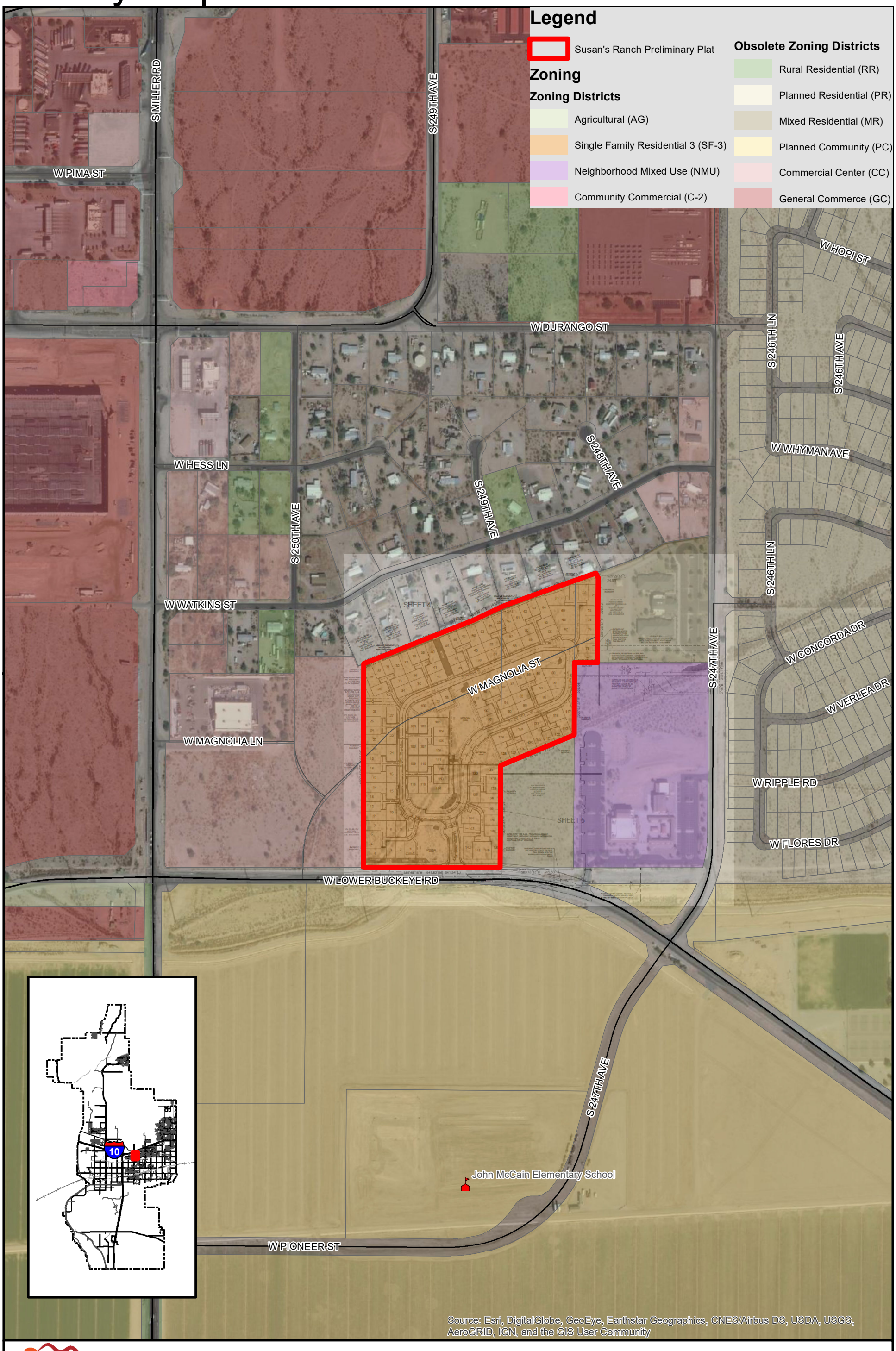

BUCKEYE, AZ

While every effort has been made to ensure the accuracy of this information, the City of Buckeye makes no warranty, expressed or implied, as to its absolute accuracy and expressly disclaims liability for the accuracy thereof.

Buckeye

0 0.05 0.1 0.2 Miles

N

Vicinity Map Date: 5/2/2022

CITY OF BUCKEYE
Regular Council Meeting
COUNCIL ACTION REPORT

MEETING DATE: 12/17/24	**AGENDA ITEM:** 4.D. DS - Resolution No. 82-24, Intent to Formation of Street Light Improvement District No. SLID 2024-005 – SE Corner of Miller & Broadway
DATE PREPARED: 12/17/24	**DISTRICT NO.:** 1
STAFF LIAISON: Ron Moll, City Engineer, rmoll@buckeyeaz.gov, (480) 623-8442	
DEPARTMENT: Development Services	**AGENDA ITEM TYPE:** Consent Agenda Items / New Business

ACTION/MOTION: (This language identifies the formal motion to be made by the Council)
Council to take action on Resolution No. 82-24, accepting a Petition for Formation of a Street Lighting Improvement District (SLID); declaring its intention to form a SLID; designating such District as the "City of Buckeye Street Lighting Improvement District No. SLID 2024-005"; providing the annual levy of taxes or assessments equally apportioned upon all of the non-public property owners in the District to purchase energy for the lighting of public streets and parks within and adjacent to the District; and ordering recording and filing of this Resolution. SLID generally covers the shopping center located at the southeast corner of Miller and Broadway Road.

SUMMARY

PROJECT DESCRIPTION:
Street Lighting Improvement Districts (SLIDs) are established to purchase (and not generate) energy for street lighting or public park lighting within the District and adjacent streets so that the costs are not borne by the City in its Highway User Revenue Fund. This SLID generally covers the shopping center located at the southeast corner of Miller and Broadway Road.

BENEFITS:
Creation of SLIDs provide for the benefit of ensuring that there is a balance of revenue and expenditures to provide for the quality of life for the residents/owners of a particular development without an undue burden upon the existing community. SLIDs ensure that only the owners that have benefit from the lighting in their community pay for that service. Having the costs of street and public park lighting within a SLID borne by the owners in a development ensures that the revenue needed to fund these costs is always in place.

FUTURE ACTION:
Current action is the Resolution Ordering the Formation of such District. A budget and further Council action will take place at the beginning of the next fiscal year to implement this District.

FINANCIAL IMPACT STATEMENT:
No Financial Impact

BUDGETED:
No

FISCAL YEAR:
FY24

FUND/DEPARTMENT:

Items related to a project or facility location must include an attached vicinity map for Council Review.
ATTACHMENTS:
Resolution 82-24 SLID-2024-005.pdf
SLID - Petition - Formation-Fry's #654 MIller Broadway.pdf

WHEN RECORDED, RETURN TO:

City of Buckeye
ATTN: City Clerk, Lucinda J. Aja
530 East Monroe Avenue
Buckeye, Arizona 85326

RESOLUTION NO. 82-24

A RESOLUTION OF THE MAYOR AND CITY COUNCIL OF THE CITY OF BUCKEYE, ARIZONA, ACCEPTING A PETITION FOR FORMATION OF A STREET LIGHTING IMPROVEMENT DISTRICT; DECLARING ITS INTENTION TO FORM A STREET LIGHTING IMPROVEMENT DISTRICT; DESIGNATING SUCH DISTRICT AS THE "CITY OF BUCKEYE STREET LIGHTING IMPROVEMENT DISTRICT NO. SLID-2024-005"; PROVIDING FOR THE ANNUAL LEVY OF TAXES OR ASSESSMENTS EQUALLY APPORTIONED UPON ALL OF THE NON-PUBLIC PROPERTY OWNERS IN THE DISTRICT TO PURCHASE ENERGY FOR THE LIGHTING OF PUBLIC STREETS AND PARKS WITHIN AND ADJACENT TO THE DISTRICT; AND ORDERING THE RECORDING AND FILING OF THIS RESOLUTION.

BE IT RESOLVED by the Mayor and City Council of the City of Buckeye, Arizona, as follows:

Section 1. Acceptance and Findings. A Petition for the formation of the City of Buckeye Street Lighting Improvement District No. SLID-2024-005 to purchase (and not generate) energy for street and public park lighting within the District and streets adjacent thereto has been filed with the Clerk and presented to the Governing Body of the City. The Petition is accepted. The Petition purports to be signed by all of the non-public real property owners in the proposed District, exclusive of mortgagees and other lienholders. After verification of such ownership, the Governing Body finds that the Petition was signed by all of the real property owners in the proposed District, exclusive of mortgagees and other lienholders or the owners of any Public Property.

Section 2. Definitions. In this Resolution, the following terms shall have the following meanings:

"*APS*" shall mean the Arizona Public Service Company.
"*City*" shall mean the City of Buckeye, Arizona.
"*Clerk*" shall mean the Clerk of the City, located at 530 East Monroe Avenue, Buckeye, Arizona 85326.

"*Director*" shall mean the Director of the Arizona Department of Revenue.

"*District*" shall mean the City of Buckeye Street Lighting Improvement District No. SLID-2024-005, as described by the legal description, Assessor's parcel number, and map in *Exhibits A*, *B* and *C* attached hereto and incorporated by reference herein.

"*Governing Body*" shall mean the Mayor and City Council of the City.

"*Incidental Expenses*" shall mean the costs of posting, publication, mailing, recording, engineering and legal fees with respect to the formation of the District and the annual levy of taxes.

"*Petition*" shall mean the Petition, Waiver, and Consent to Formation of a Street Lighting Improvement District by the City of Buckeye, requesting formation of the District, on file in the Clerk's office.

"*Public Property*" shall mean any lot or parcel belonging to the United States; the state of Arizona (the "*State*"); any county, city, town, school district or political subdivision; or any institution of the State or county that is physically located within the District, including without limitation any public street, avenue, alley or public easement located within the District hereinafter dedicated to public use.

"*Street Lighting System*" shall mean all publicly owned street and traffic lights and all wire, apparatus and other facilities now in place or hereafter constructed or acquired for the lighting of public streets and parks within the District and on streets adjacent to the District.

"*Work*" shall mean the purchasing of energy for the operation of the Street Lighting System.

Section 3. Declaration of Intention to Order Formation of the District. The public interest and convenience require, and it is the intention of the Governing Body to order, the Work through formation of the District pursuant to A.R.S. Title 48, Chapter 4, Article 2. The District's sole purpose shall be the purchase, not generation, of energy to operate the Street Lighting System, including as it is hereafter modified or enlarged. The District shall encompass the property described on *Exhibits A*, *B*, and *C*, attached hereto. The Assessor's parcel number shown on *Exhibit B* is for convenience only. If either *Exhibit A* or *Exhibit B* or both conflict with *Exhibit C*, *Exhibit C* shall govern and be determinative of a parcel's inclusion within, or exclusion from, the District, subject to the restrictions of Section 5 of this Resolution. For purposes of this Resolution and of all resolutions, ordinances and notices pertaining hereto, the District shall be known as and is hereby designated as "City of Buckeye Street Lighting Improvement District No. SLID-2024-005".

Section 4. Statutory Authority; Payment of Incidental Expenses. All proceedings pertaining to the District shall be done under and as authorized by A.R.S. Title 48, Chapter 4, Article 2, and all amendments thereto including, without limitation, A.R.S. §§ 48-616 and -617. All Incidental Expenses shall become the obligation of the District.

Section 5. Excluded Property. No Public Property or property owned by a homeowners' association will be liable to pay any portion of the District's costs and expenses. Additionally, any public streets, avenues, alleys, or public easements hereafter dedicated to public use shall become exempt after such dedication.

Section 6. Protests and Objections to Extent of District. In the Petition, the signer has made written consents and waivers pertaining to the ordering of the Work and to the formation of the District and has specifically waived all protests against formation of, and objections to, the extent of the District. City staff has verified that all non-public real property owners within the District have signed the Petition, and the Governing Body finds as a fact that all non-public property owners within the District have signed such Petition. Therefore, pursuant to A.R.S. § 48-617(A), no publication, mailing or posting of any notice pertaining to formation of the District will be made.

Section 7. Engineer's Estimate, Plans and Specifications. As financing for the acquisition and construction of the initial Street Lighting System has been, or will be, provided, the District's sole purpose will be to purchase, and not generate, energy to operate the Street Lighting System. No engineer's estimate, plans, or specifications have been filed with the Clerk. In the Petition, all owners of land within the District specifically waived the filing of an engineer's estimate, plans, or specifications.

Section 8. Determination of Type of Lighting and Consideration of the Rate to be Paid. The type of lighting shall be the type now in place within the District, to be operated nightly from dusk to dawn, or such other lighting facilities as may be acquired in the future by the City or some other entity for use within the District. The District's costs and expenses of purchasing energy for the operation of the Street Lighting System are subject to change due to inflation, new construction, new technology, updated APS rate schedules as approved by the Arizona Corporation Commission, updated APS or City specifications as approved by the City Engineer, or acquisition of additional portions of the Street Lighting System.

Section 9. Recordation. A certified copy of this Resolution shall be recorded in the office of the Maricopa County Recorder within ten (10) days of its adoption to give notice of formation of the District, as required by A.R.S. § 48-574(M).

Section 10. Extension for Filing. If either the formation of the District occurs after November 1 of the year preceding the year in which initial assessments are to be levied, or the resolution ordering the Work is not filed with both the Arizona Department of Revenue and the Maricopa County Assessor prior to such November 1, the Mayor and Council hereby request, subject to the November 30 deadline for such request as provided in A.R.S. § 42-17257(B), that the Director of the Arizona Department of Revenue extend the deadline prescribed by A.R.S. § 42-17257 to December 20, 2025.

PASSED AND ADOPTED by the Mayor and City Council of the City of Buckeye, Arizona, this 17th day of December, 2024.

Eric W. Orsborn, Mayor

ATTEST:

Lucinda J. Aja, City Clerk

APPROVED AS TO FORM:

K. Scott McCoy, City Attorney

Attachments:
Exhibit A: Legal Description
Exhibit B: Assessor's Parcel Number(s) and Owner's Name(s)
Exhibit C: Boundary Map

CERTIFICATION

I, Lucinda J. Aja, the duly appointed and acting Clerk of the City of Buckeye, Arizona, do hereby certify that the above and foregoing Resolution No. 82-24 was duly passed by the Mayor and Council of the City of Buckeye, Arizona, at a regular meeting held on December 17, 2024, and the vote was ____ aye's, ____ nay's, ____ abstained and ____ were absent and that the Mayor and Council Members were present thereat.

DATED: December 17, 2024.

Lucinda J. Aja, City Clerk

EXHIBIT A
Legal Description
(consisting of 1 page)

EXHIBIT A
CITY OF BUCKEYE – STREET LIGHTING IMROVEMENT DISTRICT
NO. 2024-SLID-005
HERITAGE WEST COMMERCIAL
LEGAL DESCRIPTION

A portion of the Northwest quarter of Section 29, Township 1 North, Range 3 West, of the Gila and Salt River Base and Meridian, Maricopa County, Arizona, more particularly described as follows:

Beginning at the Northwest corner of said Section 29, a brass in handhole from which the North quarter corner of said Section 29, a brass cap in handhole, bears North 90°00'00" East (Basis of Bearing), a distance of 2616.36 feet;

Thence along the north line of the Northwest quarter of said Section 29, North 90°00'00" East, a distance of 1021.81 feet;

Thence leaving said north line, South 00°36'09" West, a distance of 33.00 feet, to the southerly right-of-way line of Broadway Road;

Thence leaving said southerly right-of-way line, along the easterly line of Lot 2 as shown on the Minor Subdivision Heritage West, recorded in Book 1736, Page 41, Maricopa County Records (MCR), South 00°36'09" West, a distance of 883.00 feet, to the southerly line of said Lot 2;

Thence leaving said easterly line, along said southerly line, South 89°59'50" West, a distance of 981.75 feet, to the easterly right-of-way line of Miller Road;

Thence leaving said southerly line and said easterly right-of-way line, South 89°59'50" West, a distance of 40.00 feet, to the west line of the Northwest quarter of said Section 29;

Thence along said west line, North 00°35'56" East, a distance of 916.05 feet, to the **Point of Beginning.**

Containing 935,922 Square Feet or 21.49 Acres more or less.

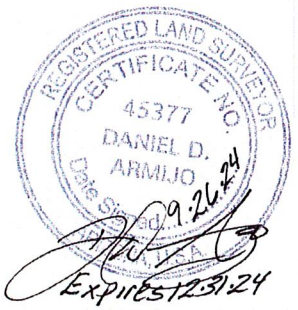

EXHIBIT B
ASSESSOR'S PARCEL NUMBER(S) AND OWNER'S NAME(S)
(consisting of 1 page)

EXHIBIT B

CITY OF BUCKEYE STREET LIGHTING IMPROVEMENT DISTRICT
NO. 2024-SLID-005
HERITAGE WEST COMMERCIAL
ASSESSOR PARCEL NUMBERS

ASSESSOR PARCEL NUMBER	OWNER
504-40-993	SMITHS FOOD & DRUG CENTERS INC
504-40-994	BARCLAY HOLDINGS CXVI LLC

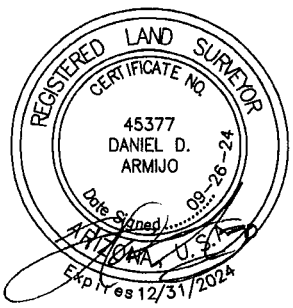

AW LAND SURVEYING, LLC
P.O. BOX 2170
CHANDLER, AZ 85244
(480) 244-7630
DARMIJO@AWLANDSURVEY.COM

JOB NO. 22-019 | DATE: 9-26-24

HERITAGE WEST COMMERCIAL
S.E.C. BROADWAY ROAD & MILLER ROAD
BUCKEYE, ARIZONA

STREET LIGHT IMPROVEMENT DISTRICT

EXHIBIT C
BOUNDARY MAP
(consisting of 1 page)

EXHIBIT C

CITY OF BUCKEYE STREET LIGHTING IMPROVEMENT DISTRICT
NO. 2024-SLID-005
HERITAGE WEST COMMERCIAL - BOUNDARY MAP

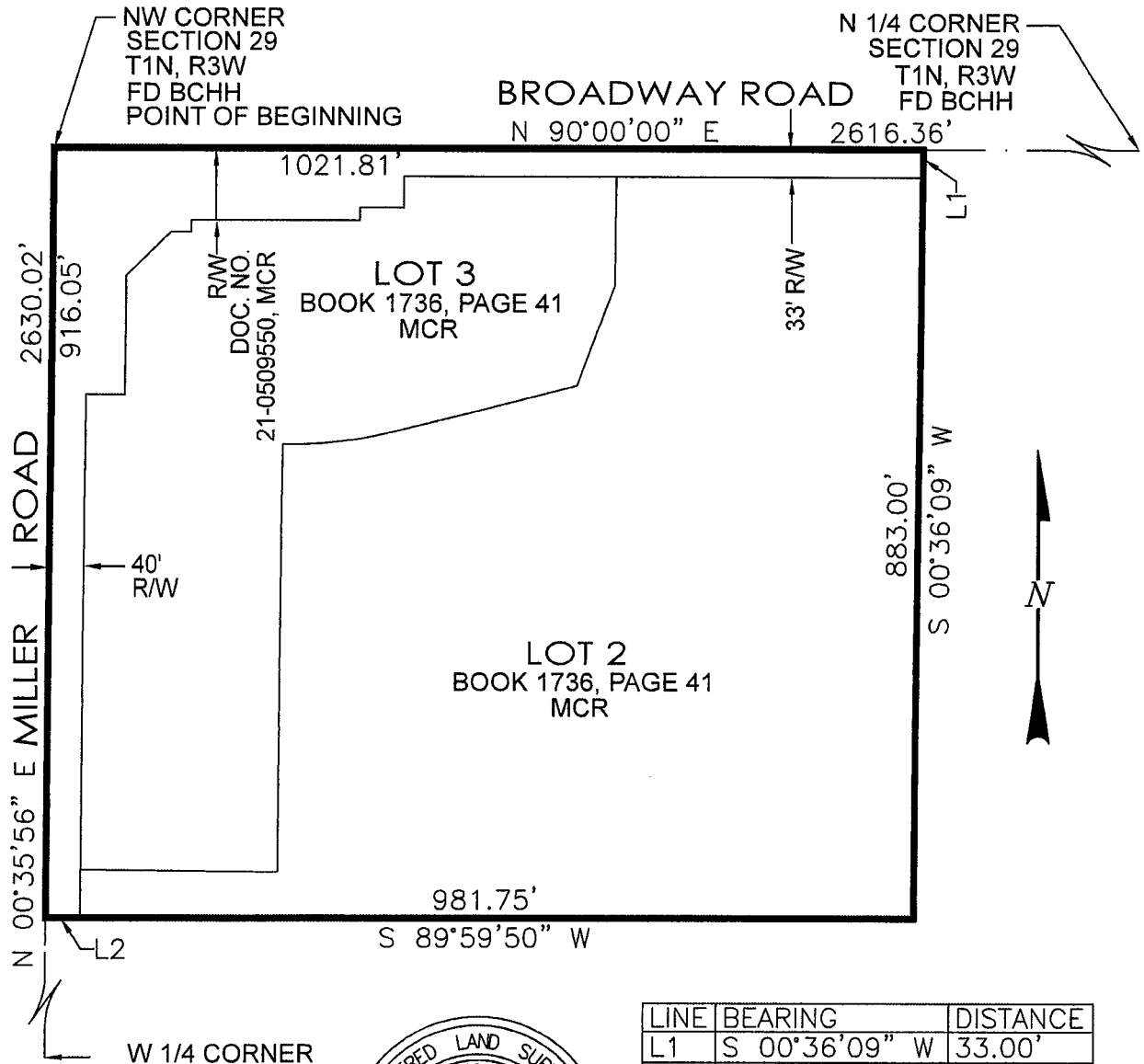

LINE	BEARING	DISTANCE
L1	S 00°36'09" W	33.00'
L2	S 89°59'50" W	40.00'

REGISTERED LAND SURVEYOR
CERTIFICATE NO.
45377
DANIEL D.
ARMIJO
Date Signed 09-26-24
ARIZONA, U.S.A.
Expires 12/31/2024

AW LAND SURVEYING, LLC
P.O. BOX 2170
CHANDLER, AZ 85244
(480) 244-7630
DARMIJO@AWLANDSURVEY.COM

JOB NO. 22-019 | DATE: 9-26-24

HERITAGE WEST COMMERCIAL
S.E.C. BROADWAY ROAD & MILLER ROAD
BUCKEYE, ARIZONA

STREET LIGHT IMPROVEMENT DISTRICT

When Recorded, Return to:
Lucinda J. Aja, City Clerk
City of Buckeye
530 East Monroe Avenue
Buckeye, Arizona 85326

PETITION, WAIVER AND CONSENT TO FORMATION OF A STREET LIGHTING IMPROVEMENT DISTRICT BY THE CITY OF BUCKEYE

Fry's #654 Miller & Broadway
SLID-2024-005

To: Honorable Mayor and Councilmembers, City of Buckeye, Arizona

Pursuant to Arizona Revised Statutes ("*A.R.S.*") Title 48, Chapter 4, Article 2 (the "*Improvement District Law*"), the undersigned property owner(s) (the "*Petitioner*") respectfully petitions the Mayor and City Council (the "*City Council*") of the City of Buckeye, Arizona (the "*City*"), to order the formation of a street lighting improvement district under the Improvement District Law. In support of this Petition, Waiver and Consent to Formation of a Street Lighting Improvement District by the City of Buckeye (this "*Petition*"), the Petitioner agrees to waive certain rights under the Improvement District Law and hereby consents to the formation of a street lighting improvement district encompassing the land shown on [*Exhibits A*, *B*, and *C*] attached hereto and incorporated by reference herein.

1. Name of District. The Petitioner hereby requests the proposed district to be named the "City of Buckeye Street Lighting Improvement District No. SLID-2024-005" (the "*District*").

2. Area of District. The property comprising the proposed District is described by a legal description, Assessor's Parcel Number(s), and a map or plat of the area, all as set forth in *Exhibits A*, *B*, and *C*. Such property is entirely within the corporate boundaries of the City. The Petitioner respectfully requests that the property shown on *Exhibits A*, *B* and *C* be included within the District. The proposed District consists of an aggregate of [21.49 acres (935908 square feet)] which are entirely within the corporate boundaries of the City. The Petitioner respectfully requests that the land shown on *Exhibits A*, *B* and *C* be included within the District. The Assessor's parcel number set forth in *Exhibit B* is for convenience only. Should either the legal description set forth in *Exhibit A* or the Assessor's parcel number set forth in *Exhibit B* conflict with *Exhibit C*, *Exhibit C* shall govern.

3. Ownership. The Petitioner is the sole owner of all non-public real property within the proposed District.

4. Purpose. The District is proposed to be formed for the purpose of purchasing, and not generating, energy for street and public park lighting.

5. Public Convenience and Necessity. Public convenience, necessity and welfare will be promoted by the formation of the District, the inclusion of the property described in *Exhibits A*, *B*, and *C* within the District, and the levying of an annual ad valorem tax or equal apportionment of taxes upon all of the non-public real property within the District as provided in A.R.S. § 48-616(C).

6. Fees and Reimbursement. The Petitioner has paid all application fees for the formation of the District and further agrees to reimburse the City for all reasonable legal and engineering fees and costs incurred by the City with respect to the formation of the District.

7. Expansion of or Annexation to the District. The Petitioner waives any objection to, or protest against, any future enlargement or enlargements of the District and also waives all notices of such enlargement or enlargements, whether required to be published, posted, or mailed with respect to the later enlargement of the District's boundaries. The Petitioner further waives any objection to, or protest against, the consolidation of the District with any other similar district or districts.

8. Waiver and Consent. The Petitioner, with full knowledge of its rights being waived hereunder, hereby expressly waives:

a) The right to challenge or object to any and all irregularities, illegalities or deficiencies which may exist in the acts or proceedings resulting in the resolution of intention and the resolution ordering the work relating to the formation of the District;

b) The right to challenge or object to any and all irregularities, illegalities or deficiencies which may exist in the acts or proceedings that result in the adoption of any and all future resolutions of intention, resolutions ordering work, resolutions enlarging the District, and notices pertaining thereto;

c) Any necessity for publication, posting, mailing, or recording of any resolution(s) of intention, resolution(s) ordering work, resolution(s) enlarging the District, or notices of proposed improvements as described in A.R.S. §§ 48-578 and 48-581;

d) All protest rights whatsoever under A.R.S. § 48-579(A) and (B), which provide for protests against the work;

e) All objections to the extent of the District under A.R.S. § 48-579(C);

f) All objections to the lack of plans and specifications, the engineer's estimate and an assessment diagram, all of which are unnecessary for completion of the District's formation or purpose; and

g) Any necessity for any notice or hearing with respect to land owned by the Petitioner now within the proposed boundaries of the District.

9. Equal Apportionment. The Petitioner hereby petitions the City Council to equally apportion the District's annual taxes based on the number and classification of properties within the District pursuant to A.R.S. § 48-616(J). The Petitioner further requests that no publicly owned land or property owned by a homeowners' association shall be liable to pay any expenses of the District.

10. Waiver of Petition. This Petition shall be deemed to be a petition of more than one-half (1/2) of the taxable property units and more than one-half (1/2) of the assessed valuation within the District and as such shall also be deemed to be a waiver of any and all requirements to file a petition under A.R.S. § 48-576, as amended.

11. Public Benefit. The purchasing of energy to operate street lighting improvements within the District is of more than local or ordinary public benefit and should be charged against the property within the District, all of which will benefit thereby.

12. Successors and Assigns. To the extent permitted by law, this Petition shall be binding on all successors or assigns of the Petitioner who hereafter own or have an interest in the property described in *Exhibits A*, *B*, and *C* attached hereto.

13. Authority to Sign Petition. The individual signing this Petition represents and warrants to the City that he/she is duly authorized to (i) sign the Petition to form or enlarge the District, as applicable; (ii) bind the Petitioner to the matters set forth in this Petition; and (iii) agree to hold the City harmless for, from and against any claims in connection with the formation or enlargement of the District.

14. Recordation. This Petition may be recorded in the office of the Maricopa County Recorder and in the office of the Superintendent of Streets of the City.

The Petitioner hereby requests the City Council of the City to adopt a resolution of intention to order the proposed improvements and to proceed with the improvements requested herein.

IN WITNESS WHEREOF, the undersigned representative of the Petitioner has executed this Petition as of the date shown below.

PETITIONER:

Barclay Holdings CXVI LLC, an Arizona limited liability company

By: _____

Title: Scott T. Archer, Manager

STATE OF Arizona)
) ss.
County of Maricopa)

VERIFICATION

Scott T. Archer, after being first duly sworn upon oath, deposes and states:

That s/he is the authorized officer/signer of Barclay Holdings CXVI, LLC, an Arizona limited liability company and Petitioner herein; s/he been duly authorized to sign this Petition and make this Verification in that capacity; s/he has read the foregoing Petition, and knows the contents thereof to be true.

SUBSCRIBED AND SWORN TO by Scott T. Archer before me, the undersigned notary public, this 22nd day of October, 2024.

Notary Public

(Seal and Expiration Date)
June 30, 2025

LISA VICTORIA WRIGHT
Notary Public - Arizona
Maricopa County
Commission # 607413
My Comm. Exp. June 30, 2025

LISA VICTORIA WRIGHT
Notary Public - Arizona
Maricopa County
Commission # 607413
My Comm. Exp. June 30, 2025

Smiths Food & Drug Centers Inc,

By: _____

Title: CFO

STATE OF Arizona)
) ss.
County of Maricopa)

VERIFICATION

David Weakland, after being first duly sworn upon oath, deposes and states:

That s/he is the authorized officer/signer of Smith's Food and Drug Centers dba Fry's Food Stores of Arizona, and Petitioner herein; s/he been duly authorized to sign this Petition and make this Verification in that capacity; s/he has read the foregoing Petition, and knows the contents thereof to be true.

SUBSCRIBED AND SWORN TO by David Weakland before me, the undersigned notary public, this 25th day of October, 2024.

Melissa Cooper
Notary Public

(Seal and Expiration Date) April 20, 2025

MELISSA COOPER
Notary Public, State of Arizona
Maricopa County
Commission # 602532
My Commission Expires
April 20, 2025

RECEIPT this _____ day of_____, 2024, of the foregoing Petition is hereby acknowledged by the City Clerk of the City of Buckeye, Arizona, who will deliver said Petition to the City Council for action.

_____

Lucinda J. Aja, City Clerk

EXHIBIT A
CITY OF BUCKEYE – STREET LIGHTING IMROVEMENT DISTRICT
NO. 2024-SLID-005
HERITAGE WEST COMMERCIAL
LEGAL DESCRIPTION

A portion of the Northwest quarter of Section 29, Township 1 North, Range 3 West, of the Gila and Salt River Base and Meridian, Maricopa County, Arizona, more particularly described as follows:

Beginning at the Northwest corner of said Section 29, a brass in handhole from which the North quarter corner of said Section 29, a brass cap in handhole, bears North 90°00'00" East (Basis of Bearing), a distance of 2616.36 feet;

Thence along the north line of the Northwest quarter of said Section 29, North 90°00'00" East, a distance of 1021.81 feet;

Thence leaving said north line, South 00°36'09" West, a distance of 33.00 feet, to the southerly right-of-way line of Broadway Road;

Thence leaving said southerly right-of-way line, along the easterly line of Lot 2 as shown on the Minor Subdivision Heritage West, recorded in Book 1736, Page 41, Maricopa County Records (MCR), South 00°36'09" West, a distance of 883.00 feet, to the southerly line of said Lot 2;

Thence leaving said easterly line, along said southerly line, South 89°59'50" West, a distance of 981.75 feet, to the easterly right-of-way line of Miller Road;

Thence leaving said southerly line and said easterly right-of-way line, South 89°59'50" West, a distance of 40.00 feet, to the west line of the Northwest quarter of said Section 29;

Thence along said west line, North 00°35'56" East, a distance of 916.05 feet, to the **Point of Beginning.**

Containing 935,922 Square Feet or 21.49 Acres more or less.

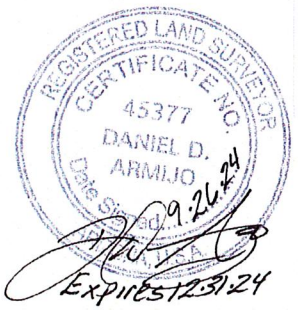

EXHIBIT B

CITY OF BUCKEYE STREET LIGHTING IMPROVEMENT DISTRICT
NO. 2024-SLID-005
HERITAGE WEST COMMERCIAL
ASSESSOR PARCEL NUMBERS

ASSESSOR PARCEL NUMBER	OWNER
504-40-993	SMITHS FOOD & DRUG CENTERS INC
504-40-994	BARCLAY HOLDINGS CXVI LLC

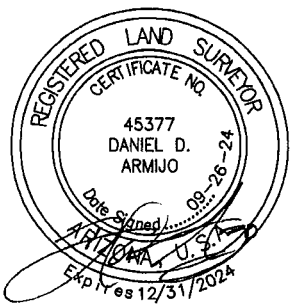

AW LAND SURVEYING, LLC
P.O. BOX 2170
CHANDLER, AZ 85244
(480) 244-7630
DARMIJO@AWLANDSURVEY.COM

JOB NO. 22-019 | DATE: 9-26-24

HERITAGE WEST COMMERCIAL
S.E.C. BROADWAY ROAD & MILLER ROAD
BUCKEYE, ARIZONA

STREET LIGHT IMPROVEMENT DISTRICT

EXHIBIT C

CITY OF BUCKEYE STREET LIGHTING IMPROVEMENT DISTRICT
NO. 2024-SLID-005
HERITAGE WEST COMMERCIAL - BOUNDARY MAP

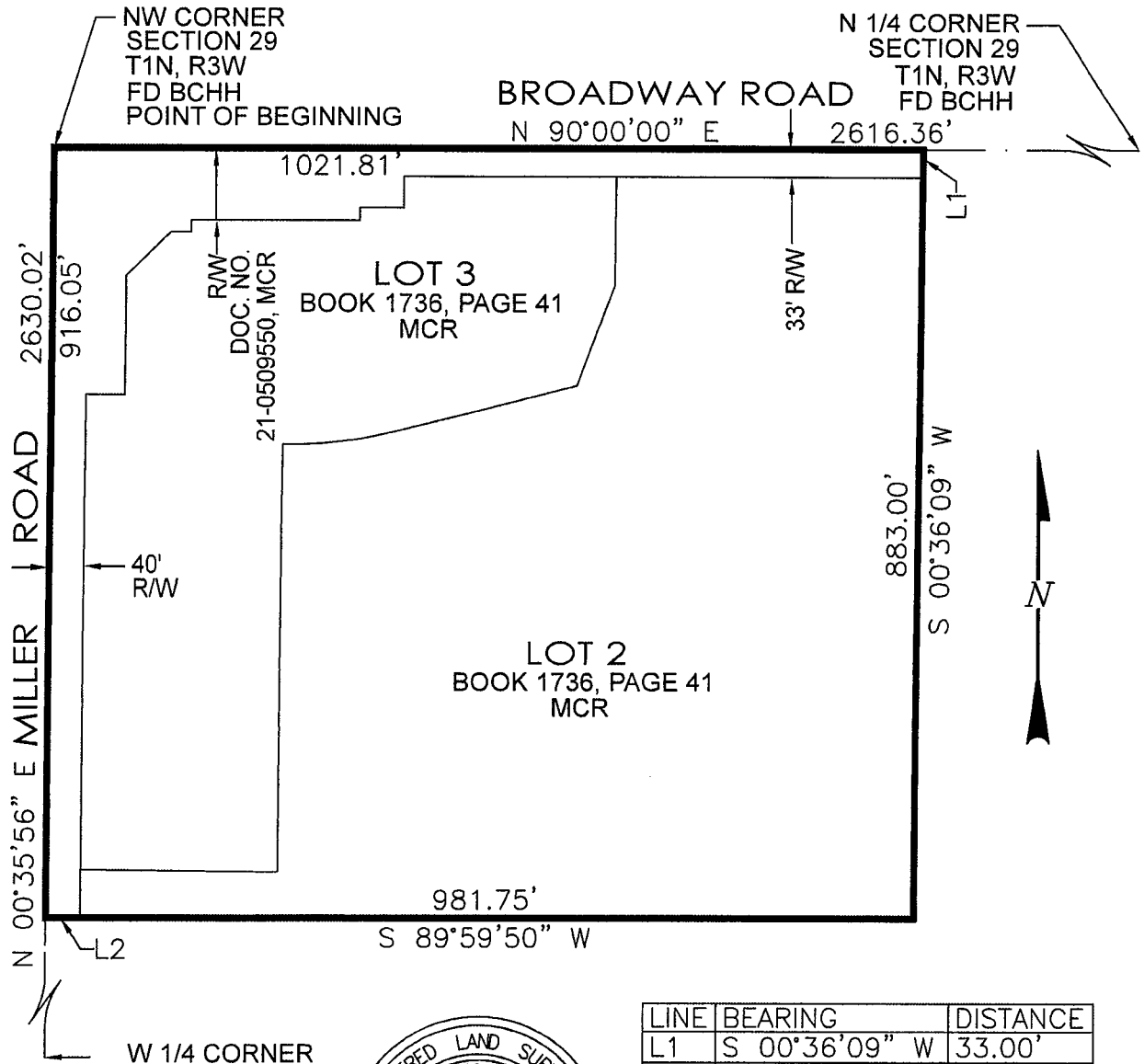

LINE	BEARING	DISTANCE
L1	S 00°36'09" W	33.00'
L2	S 89°59'50" W	40.00'

REGISTERED LAND SURVEYOR
CERTIFICATE NO.
45377
DANIEL D.
ARMIJO
Date Signed 09-26-24
ARIZONA, U.S.A.
Expires 12/31/2024

AW LAND SURVEYING, LLC
P.O. BOX 2170
CHANDLER, AZ 85244
(480) 244-7630
DARMIJO@AWLANDSURVEY.COM

JOB NO. 22-019 | DATE: 9-26-24

HERITAGE WEST COMMERCIAL
S.E.C. BROADWAY ROAD & MILLER ROAD
BUCKEYE, ARIZONA

STREET LIGHT IMPROVEMENT DISTRICT

CITY OF BUCKEYE
Regular Council Meeting
COUNCIL ACTION REPORT

MEETING DATE: 12/17/24	**AGENDA ITEM:** 4.E. DS - Yuma Climate Controlled Self Storage Minor Subdivision
DATE PREPARED: 12/17/24	**DISTRICT NO.:** Council District 4
STAFF LIAISON: Patricia Cooley, Planner I, pcooley@buckeyeaz.gov, (623) 349-6233	
DEPARTMENT: Development Services	**AGENDA ITEM TYPE:** Consent Agenda Items / New Business

ACTION/MOTION: (This language identifies the formal motion to be made by the Council)
Council to take action on a Minor Subdivision titled "Yuma Climate Controlled Self Storage" concerning approximately 5.7 acres of real property located at the southwest corner of West Yuma Road and South 247th Avenue.

SUMMARY

PROJECT DESCRIPTION:
Mike Gleason, Entellus, Inc, on behalf of property owner 247 Yuma-AZ Owner, LLC, is requesting approval of a Minor Subdivision titled "Yuma Climate Controlled Self Storage" concerning approximately 5.7 acres of real property located at the southwest corner of West Yuma Road and South 247th Avenue. The proposed Minor Subdivision divides the parcel into two lots, dedicates right-of-way for both Yuma Road and 247th Avenue, and dedicates public utility and reciprocal access easements. Once subdivided, the owner's intent is to develop 3.34-acre Lot 1 with a self-storage facility, reserving 1.53-acre Lot 2 for future development in accordance with the property's Commercial Center (CC) zoning.

BENEFITS:
The subject Minor Subdivision will facilitate additional commercial development, generating tax revenue and creating employment opportunities for Buckeye residents.

FINANCIAL IMPACT STATEMENT:

See Planning Financial Impact Statement.

FINANCIAL IMPACT STATEMENT:
Although a fiscal impact analysis has not been conducted on this specific project, all new development will have an ongoing fiscal impact on the city. The development is responsible for construction of all infrastructure necessary to serve the site and will generate one-time revenue for the city such as permit fees, construction sales tax and development impact fees. Longer term fiscal impacts include increased demands for municipal services, the costs of which may or may not be offset by increased property values/tax levies, city sales tax, state shared revenues and the increased demand for commercial and retail development. Any areas that will be maintained by the city are constructed by the developer and then conveyed to the city two years after construction.

Items related to a project or facility location must include an attached vicinity map for Council Review.
ATTACHMENTS:
Exhibit A - PLZS-24-0006 - Yuma Self Storage Vicinity Map - PZ20241217
Exhibit B - PLZS-24-0006 - Yuma Self Storage - Narrative - PZ20241217

Exhibit C - PLZS-24-0006 - Yuma Self Storage Minor Subdivision

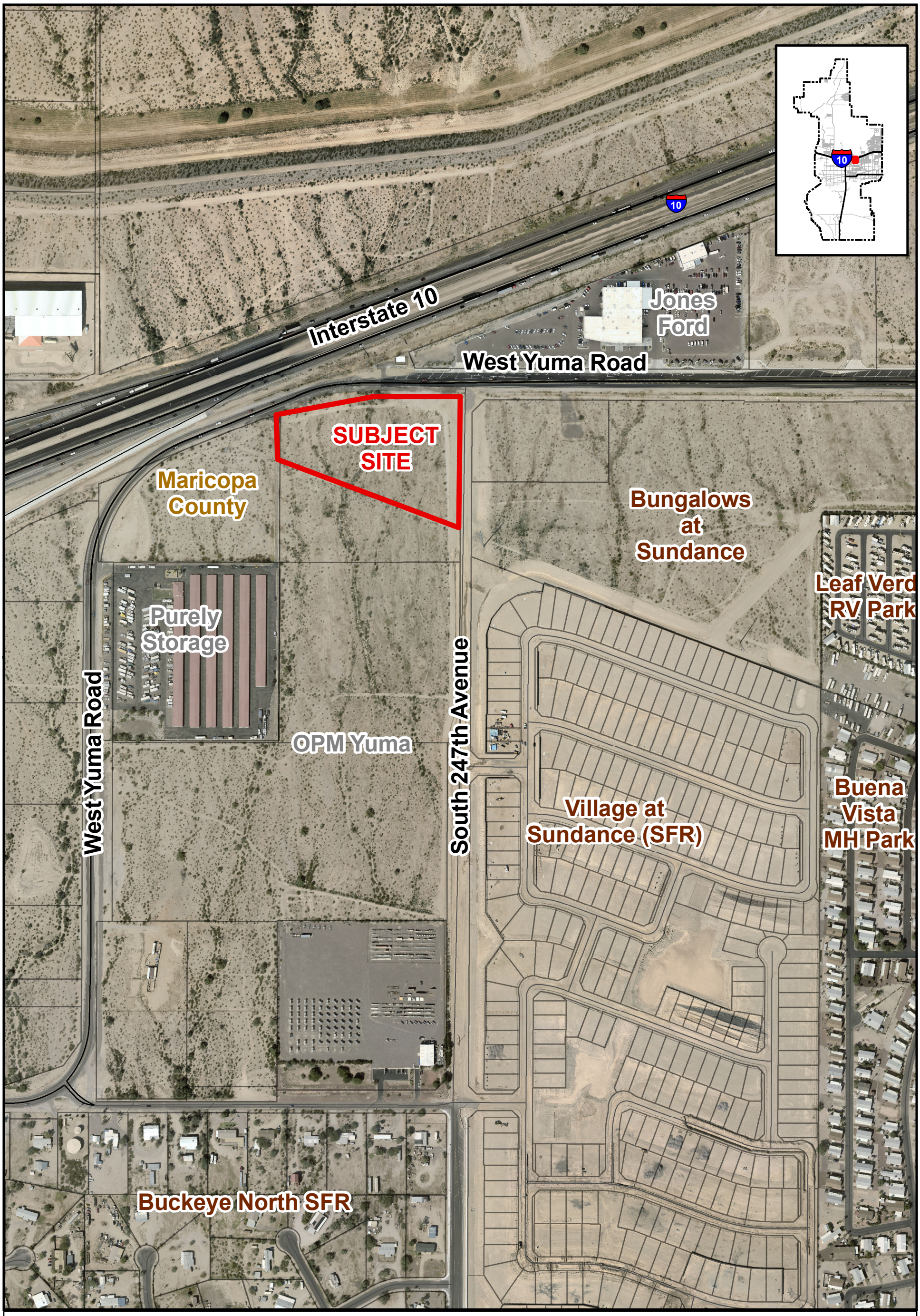

VICINITY MAP

BUCKEYE, AZ

PLZS-24-0006
Yuma Self Storage Minor Subdivision
City Council District 4

N
W E
S

1R PLZS-24-0006 RECEIVED MAR 18 2024 WD

1784 Holdings LLC
Yuma Climate Controlled Self Storage
Minor Land Division
PLZS-24-0006
Project Narrative
03/19/24
Location:
Southwest corner of 247th Avenue and Yuma Road



This Minor Land Division request is for right-of-way dedication for the half street improvements to Yuma Road and 247th Avenue as a result of the proposed development. The project site is approximately 5.674 acres and has Site Plan approval under case #PLZSP-23-00016 for an approximate 101,730 s.f. self-storage and recreational vehicle/boat storage facility located at the southwest corner of 247th Avenue and Yuma Road, Maricopa County Assessor parcel number 504-025-014C. The Property is currently a vacant parcel zoned GC. The adjacent properties are zoned the following: East – CC (– across 247th Avenue), South - GC, West – RU-43 (unincorporated County land), and North – PC (across Yuma Road).

There is an existing off-site sign on the west side of the Site that is owned independently. The existing sign agreements will remain in place. The Site has been designed to comply with existing billboard easements.

This site is planned in one phase. Water and Sewer providers are the City of Buckeye and the proposed project will connect to city water and sewer infrastructure. As a commercial use, this project will not have an impact on local schools or parks.

MINOR SUBDIVISION
YUMA CLIMATE CONTROLLED SELF STORAGE
PART OF THE NORTHWEST 1/4, SECTION 17, TOWNSHIP 1 NORTH, RANGE 3 WEST, G&S.R.B&M. MARICOPA COUNTY, ARIZONA

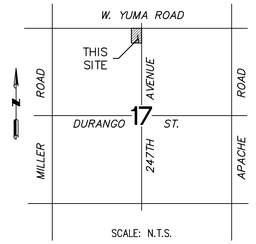

VICINITY MAP

DEDICATION

STATE OF ARIZONA }
COUNTY OF MARICOPA } SS

KNOW ALL PERSONS BY THESE PRESENTS:

THAT 247YUMA–AZ OWNER, LLC, "OWNER", HAS SUBDIVIDED UNDER THE NAME YUMA CLIMATE CONTROLLED SELF STORAGE, A SUBDIVISION LOCATED IN A PORTION OF THE NORTHWEST 1/4, SECTION 17, T1N, R3W, MARICOPA COUNTY, ARIZONA AS SHOWN AND PLATTED HEREON AND DOES HEREBY PUBLISH THIS PLAT AS AND FOR THE PLAT OF YUMA CLIMATE CONTROLLED SELF STORAGE AND DECLARES THAT THIS PLAT SETS FORTH THE LOCATION AND GIVES THE DIMENSIONS OF EACH LOT, TRACT, STREET, AND EASEMENT CONSTITUTING SAME, AND THAT EACH LOT, TRACT, STREET, AND EASEMENT SHALL BE KNOWN BY THE NUMBER, LETTER, AND/OR NAME GIVEN TO EACH RESPECTIVELY AS SHOWN ON THIS PLAT.

THE OWNER HEREBY DEDICATE TO THE CITY OF BUCKEYE FEE TITLE TO ALL PUBLIC RIGHT–OF–WAYS AS SHOWN ON THE PLAT.

THE OWNER HEREBY GRANT TO THE CITY OF BUCKEYE A NON–EXCLUSIVE EASEMENT OVER, UPON AND ACROSS THE AREAS DESIGNATED AS PUBLIC UTILITY EASEMENTS AS SHOWN ON THE PLAT FOR THE PURPOSE OF INSTALLING, CONSTRUCTING, MAINTAINING, REPAIRING, REPLACING AND UTILIZING PUBLIC UTILITIES.

THE OWNER HEREBY GRANT TO THE CITY OF BUCKEYE A NON–EXCLUSIVE EASEMENT OVER, UPON AND ACROSS THE AREAS DESIGNATED AS SIGHT VISIBILITY TRIANGLES FOR THE PURPOSE OF ENSURING THAT THESE AREAS REMAIN FREE OF SIGHT VISIBILITY OBSTRUCTIONS AS PER THE ENGINEERING DESIGN STANDARDS.

THE MAINTENANCE OF LANDSCAPING WITHIN THE OPEN SPACES, LANDSCAPED TRACTS, RETENTION BASINS AND PARKS SHALL BE THE RESPONSIBILITY OF THE OWNER OR THE ASSOCIATION FORMED BY THE OWNER.

THE MAINTENANCE OF LANDSCAPING WITHIN THE ADJACENT PUBLIC RIGHT–OF–WAYS, INCLUDING; LANDSCAPED MEDIANS WITHIN COLLECTORS AND LOCAL STREETS AND LANDSCAPED AREAS BETWEEN THE CURB AND THE DETACHED SIDEWALK, SHALL BE THE RESPONSIBILITY OF THE ADJACENT PROPERTY OWNER OR THE PROPERTY ASSOCIATION FORMED BY THE ADJACENT PROPERTY.

247YUMA–AZ OWNER, LLC, "OWNER" DO HEREBY; (1) RELEASE AND DISCHARGE THE CITY OF BUCKEYE, AND (2) INDEMNIFY, DEFEND, AND HOLD HARMLESS THE CITY OF BUCKEYE, OF AND FROM ANY LIABILITY FOR ANY AND ALL CLAIMS FOR DAMAGES OF ANY KIND TO PERSONS OR PROPERTY THAT MAY ARISE AT ANY TIME IN THE FUTURE OVER, OR IN CONNECTION WITH THE AREAS LOCATED WITHIN THE NEWLY DEDICATED RIGHT–OF–WAY AS DEPICTED ON THIS PLAT UNTIL SUCH TIME THE RIGHT–OF–WAY IS IMPROVED TO CITY STANDARDS AND THOSE IMPROVEMENTS ARE APPROVED AND ACCEPTED BY THE CITY. THE MAINTENANCE OF THE AREA WITHIN ANY NEWLY DEDICATED RIGHT–OF–WAY AS SHOWN ON THIS PLAT SHALL BE THE RESPONSIBILITY OF THE ADJACENT OWNER/OR SUBSEQUENT ADJACENT OWNERS WITHIN THE BOUNDARY OF SAID PLAT UNTIL SUCH TIME THAT THE AREA WITHIN THE RIGHT–OF–WAY IS IMPROVED TO CITY STANDARD AND ACCEPTED BY THE CITY OF BUCKEYE.

OWNER HEREBY GRANTS TO THE UNITED STATES OF AMERICA DEPARTMENT OF THE AIR FORCE ("USAF") AN AVIGATION EASEMENT OVER AND ACROSS THIS PLAT AND EVERY LOT AND PARCEL THEREOF, WHICH EASEMENT SHALL INCLUDE, BUT NOT BE LIMITED TO; THE RIGHT OF FLIGHT OF AIRCRAFT OVER THIS PLAT, TOGETHER WITH ITS ATTENDANT NOISE, VIBRATIONS, FUMES, DUST FUEL AND LUBRICANT PARTICLES, AND ALL OTHER EFFECTS THAT MAY BE CAUSED BY THE OPERATION OF AIRCRAFT LANDING AT OR TAKING OFF FROM, OR OPERATING AT OR ON LUKE AIR FORCE BASE AND AUXILIARY FIELD.

247YUMA–AZ OWNER, LLC, "OWNER" DOES HEREBY (1) RELEASE AND DISCHARGE THE USAF, AND (2) INDEMNIFY, DEFEND, AND HOLD HARMLESS THE CITY OF BUCKEYE, OF AND FROM ANY LIABILITY FOR ANY AND ALL CLAIMS FOR DAMAGES OF ANY KIND TO PERSONS OR PROPERTY THAT MAY ARISE AT ANY TIME IN THE FUTURE OVER, OR IN CONNECTION WITH AIRCRAFT OVERFLIGHTS FROM AIRCRAFT UTILIZING LUKE AIR FORCE BASE, WHETHER SUCH DAMAGE SHALL ORIGINATE FROM NOISE, VIBRATIONS, FUMES, DUST, FUEL AND LUBRICANT PARTICLES, AND ALL OTHER EFFECTS THAT MAY BE CAUSED BY THE OPERATION OF AIRCRAFT LANDING AT OR TAKING OFF FROM, OR OPERATING AT OR ON LUKE AIR FORCE BASE. THIS INSTRUMENT SHALL RUN WITH THE LAND AND BE BINDING UPON OWNER AND ITS HEIRS, ASSIGNS AND SUCCESSORS IN INTEREST TO THIS PLAT OR ANY PARCEL OR LOT THEREOF. THIS INSTRUMENT DOES NOT RELEASE THE USAF FROM LIABILITY FOR DAMAGE OR INJURY TO PERSON OR PROPERTY CAUSED BY FALLING AIRCRAFT OR FALLING PHYSICAL OBJECTS FROM AIRCRAFT, EXCEPT AS STATED HEREIN WITH RESPECT TO NOISE, FUMES, DUST, FUEL AND LUBRICANT PARTICLES.

THE EASEMENTS GRANTED WITHIN THIS DEDICATION ARE PERMANENT AND PERPETUAL AND SHALL RUN WITH THE LAND AND BE BINDING UPON OWNER AND ITS HEIRS, ASSIGNS AND SUCCESSORS IN INTEREST TO THIS PLAT OR ANY PARCEL OR LOT THEREAFTER.

A CROSS LOT ACCESS EASEMENT IS HEREBY GRANTED OVER ALL DRIVE AISLES TO AND BETWEEN ALL LOTS WITHIN THE SUBDIVISION FOR THE PURPOSE OF INGRESS AND EGRESS OF VEHICLES, INCLUDING EMERGENCY VEHICLES, PEDESTRIANS, AND BICYCLES. THE UNDERLYING PROPERTY OWNER OR ASSIGNS IS RESPONSIBLE FOR THE MAINTENANCE OF THE EASEMENT AREA.

OWNER HEREBY GRANTS TO THE ULTIMATE OWNER OF EACH PARCEL CREATED BY THIS PLAT, AN EASEMENT, OVER, UPON AND ACROSS THE AREA AS SHOWN ON THIS PLAT FOR THE PURPOSE OF PROVIDING CONTINUOUS AND UNINTERRUPTED INGRESS AND EGRESS TO EACH PARCEL CREATED BY THIS PLAT.

ALL IMPROVEMENTS, FOR STREETS AND PUBLIC UTILITIES OWNED AND OPERATED BY THE CITY, INSTALLED OR CONSTRUCTED BY OWNER WITHIN THE PUBLIC RIGHT–OF–WAYS, THE EASEMENTS, OR ANY TRACTS OR PARCELS HEREBY DEDICATED TO THE CITY OF BUCKEYE SHALL BE DEEMED TO HAVE BEEN DEDICATED BY OWNER TO THE CITY UPON THEIR COMPLETION; HOWEVER, SUCH TRANSFER SHALL NOT OCCUR UNTIL THE CITY OF BUCKEYE MANIFESTS ITS ACCEPTANCE BY SEPARATE FORMAL ACTION.

IN WITNESS WHEREOF, OWNER HAS HEREUNTO CAUSED ITS CORPORATE NAME TO BE SIGNED BY THE UNDERSIGNED, DULY AUTHORIZED OFFICER THIS _____ DAY OF _____, 2024.

247YUMA–AZ OWNER, LLC A DELAWARE LIMITED LIABILITY COMPANY
BY: 1784 HOLDINGS LLC A DELAWARE LIMITED LIABILITY COMPANY
ITS: MANAGER

BY _____
SHANE C. ALBERS

ITS SOLE MEMBER _____

APPROVALS

APPROVED BY THE MAYOR AND CITY COUNCIL OF THE CITY OF BUCKEYE ON THIS _____ DAY OF _____, 2024.

BY: _____
MAYOR

ATTEST: _____
CITY CLERK

I CERTIFY THAT ALL ENGINEERING CONDITIONS AND REQUIREMENTS HAVE BEEN COMPLIED WITH.

BY: _____
BUCKEYE CITY ENGINEER DATE

BY: _____
DEVELOPMENT SERVICES DIRECTOR DATE

ACKNOWLEDGMENT

STATE OF ARIZONA }
COUNTY OF MARICOPA } SS

THE FOREGOING INSTRUMENT WAS ACKNOWLEDGED BEFORE ME, THE UNDERSIGNED NOTARY PUBLIC, THIS _____ DAY OF _____, 2024
BY SHANE C. ALBERS, THE SOLE MEMBER OF 1784 HOLDINGS, LLC,
AS MANAGER OF 247YUMA–AZ OWNER, LLC, FOR AND ON BEHALF THEREOF.

NOTARY PUBLIC: _____.

MY COMMISSION EXPIRES: _____.

OWNER / DEVELOPER

247YUMA–AZ OWNER, LLC
8777 N. GAINEY CENTER DR. STE; 191
SCOTTSDALE, AZ 85258
PHONE: 866–828–6009
CONTACT: NATE BOURNE

LAND SURVEYOR

ENTELLUS, INC
3033 N. 44TH STREET, STE 250
PHOENIX, AZ 85018
PHONE: 602–244–2566
CONTACT: DAN FRANCETIC, RLS
EMAIL: DFRANCETIC@ENTELLUS.COM

FLOOD ZONE DESIGNATION

THE PROPERTY IS LOCATED WITHIN AN AREA DESIGNATED AS HAVING FLOOD ZONE "X" BY THE FEDERAL EMERGENCY MANAGEMENT AGENCY, ON FLOOD INSURANCE RATE MAP NO 04013C2115L, WITH A REVISION DATE OF OCTOBER 16, 2013 FOR COMMUNITY NO. 040039, IN THE CITY OF BUCKEYE, COUNTY OF MARICOPA, STATE OF ARIZONA, WHICH IS THE CURRENT FLOOD INSURANCE RATE MAP FOR THE COMMUNITY IN WHICH SAID PROPERTY IS SITUATED.

BASIS OF BEARING

THE ARIZONA STATE PLANE COORDINATE SYSTEM, CENTRAL ZONE, BASED ON THE NORTH AMERICAN DATUM OF 1983 (2011), EPOCH 2010.00. NO ROTATION APPLIED.

TWO–POINT METHOD
THE EAST LINE OF THE NORTHWEST QUARTER OF SECTION 17, TOWNSHIP 1 NORTH, RANGE 3 WEST.
BEARING = NORTH 00 DEGREES 17 MINUTES 39 SECONDS EAST

CERTIFICATION

I, DANIEL G. FRANCETIC, HEREBY CERTIFY THAT I AM A REGISTERED LAND SURVEYOR IN THE STATE OF ARIZONA, THAT THIS PLAT CONSISTING OF FOUR (4) SHEETS CORRECTLY REPRESENTS A BOUNDARY SURVEY MADE BY ME DURING THE MONTH OF JUNE, 2023; THAT THE SURVEY IS TRUE AND CORRECT AS SHOWN, THAT THE MONUMENTS EXIST OR WILL BE SET AND, THEIR POSITIONS ARE SUFFICIENT TO ENABLE THE SURVEY TO BE RETRACED.

REGISTERED LAND SURVEYOR # 33874

_____
REGISTERED LAND SURVEYOR SIGNATURE

DANIEL G. FRANCETIC, RLS
ENTELLUS, INC.
3033 N. 44TH STREET, STE 250
PHOENIX, AZ 85018

Entellus™
3033 N. 44th Street, Suite 250
Phoenix, AZ 85018
Phone 602.244.8968
Fax 602.244.8947
Website: www.entellus.com

SURVEYOR:

REGISTERED LAND SURVEYOR
CERTIFICATE NO.
33874
DANIEL G. FRANCETIC
Date Signed 11/25/24
ARIZONA U.S.A.

VERSIONS:

X	DATE	DESCRIPTION
1	02/27/24	INITIAL MOD SUBMITTAL TO CITY OF BUCKEYE
2	03/07/24	INITIAL MS SUBMITTAL TO CITY OF BUCKEYE
3	06/03/24	2ND SUBMITTAL TO CITY OF BUCKEYE
4	09/26/24	3RD SUBMITTAL TO CITY OF BUCKEYE
5	11/25/24	FINAL SUBMITTAL TO CITY OF BUCKEYE

MINOR SUBDIVISION
YUMA CLIMATE CONTROLLED SELF STORAGE

COVER

DATE:	11/25/24
SCALE:	
DESIGN:	JME
DRAFTED:	JME
QA/QC:	DGF
ENT. PROJ #:	228001
SHEET: MS	1 OF: 3

NOTES:

1. IN ACCORDANCE WITH ARS § 9-461.07, THE CITY OF BUCKEYE HAS DETERMINED THAT ALL DEDICATIONS OCCURRING WITH THIS PLAT ARE IN CONFORMANCE WITH THE GENERAL PLAN.
2. PURSUANT TO A.R.S. § 42-11102, THE CITY OF BUCKEYE, A POLITICAL SUBDIVISION OF THE STATE OF ARIZONA, IS EXEMPT FROM ALL TAXES AND ASSESSMENTS BASED ON ASSESSED VALUE EXCEPT FOR SPECIAL DISTRICTS #14751 AND 14710, WHEN APPLICABLE.
3. THE PROPERTY OWNER, OR ANY SUBSEQUENT OWNERS SHALL NOT PROCEED WITH ANY ON SITE GRADING OR EXCEVATION WITHOUT FIRST OBTAINING A PERMIT FROM THE CITY OF BUCKEYE.
4. THIS SITE CONSISTS OF A TOTAL OF 2 LOTS, 0 TRACTS AND 1 PARCEL IN THE GC ZONING DISTRICT.
5. NO STRUCTURES OF ANY KIND SHALL BE CONSTRUCTED OR ANY VEGETATION TO BE PLANTED OR BE ALLOWED TO GROW WITHIN ANY DRAINAGE EASEMENT WHICH WOULD IMPEDE THE FLOW OF WATER OVER, UNDER, OR THROUGH EASEMENTS.
6. MINOR SUBDIVISION APPROVAL BY THE CITY IS CONDITIONAL AND SUBJECT TO FINANCIAL ASSURANCES BEING IN PLACE FOR ALL IMPROVEMENTS AS SHOWN ON THE APPROVED PLANS. THE CITY WILL NOT RECORD ANY PLATS UNTIL SUCH TIME FINANCIAL ASSURANCES ARE IN PLACE. IF AFTER ONE YEAR FROM CITY COUNCIL APPROVAL THE MINOR SUBDIVISION HAS NOT BEEN RECORDED, THEN IT SHALL BE NULL AND VOID. THE SIGNED PLAT WILL NOT BE SUBMITTED TO THE CITY FOR SIGNATURE AND RECORDING UNTIL FINANCIAL ASSURANCES ARE IN PLACE.
7. ALL NEW OR RELOCATED UTILITIES WILL BE PLACED UNDERGROUND EXCEPT POWER LINES 69kv AND LARGER.
8. IT IS ACKNOWLEDGED THAT THIS PROPERTY WILL BE PART OF A STREET LIGHTING IMPROVEMENT DISTRICT (SLID) AT THE TIME THAT IT IS DEVELOPED.
9. OWNER AFFIRMS THAT IT HAS REVIEWED THE REQUIREMENTS OF A.R.S. §§ 9-463.01(J) AND 45-576 AND RELATED REQUIREMENTS REGARDING SUBDIVIDED LANDS AND THE ASSURED WATER SUPPLY PROGRAM, AND AFFIRMS THAT A CERTIFICATE OF ASSURED WATER SUPPLY IS NOT REQUIRED.
10. FIRST LOT TO DEVELOP WITHIN THIS SUBDIVISION WILL BE REQUIRED TO COMPLETE HALF STREET IMPROVEMENTS FOR THE ENTIRE BOUNDARY PLATTED HEREON INCLUDING RELOCATION OF OVERHEAD POWER ALONG YUMA ROAD.
11. A RE-CONFIGURATION OF ACCESS EASEMENTS MAY BE REQUIRED WITH APPROVAL OF SITE PLAN OR SITE PLAN AMENDMENT AS DETERMINED BY THE CITY ENGINEER.
12. LOT 1 AND LOT 2 TO CONSTRUCT SHARED ACCESS ON WEST YUMA ROAD AND ON SOUTH 247TH AVENUE. ACCESS POINTS TO BE CONSTRUCTED AS PART OF HALF-STREET CONSTRUCTION REQUIREMENTS BY FIRST LOT TO DEVELOP.

SURVEYOR'S NOTES:

1. THIS SURVEY PREPARED UTILIZING THE TITLE REPORT AS PROVIDED BY CHICAGO TITLE INSURANCE COMPANY, COMMITMENT NO. CT349220092, DATED FEBRUARY 13, 2023 AS THE BASIS OF THE LEGAL DESCRIPTION AND SCHEDULE B DOCUMENTS SHOWN.
2. THE RECORD LEGAL DESCRIPTION FOR THE SUBJECT PREMISES CAN BE FOUND IN MARICOPA COUNTY RECORDER (MCR) DOCUMENT # 2020-1252979. PARCEL NO. 1 OF THIS LEGAL DESCRIPTION MATCHES WITH THE LEGAL DESCRIPTION OF THIS PROPERTY IN PART, BUT IS MISSING A KEY EXCEPTION SHOWN ON THE LEGAL DESCRIPTION IN THE TITLE REPORT. THE MCR DOCUMENT ALSO INCLUDES A PARCEL NO. 2 THAT IS OFF-PROPERTY AND NOT A PART OF THIS SURVEY. IT APPEARS THAT THE PROPERTY AS DESCRIBED IN THE MCR DOCUMENT WAS SPLIT TO RESULT IN THE DESCRIPTION SHOWN IN THE TITLE REPORT. MCR DOCUMENT # 2023-0658996 ADDRESSES THESE ISSUES.
3. ADJACENT PARCEL DESCRIPTIONS DO NOT CONFLICT WITH THE LEGAL DESCRIPTION AS SHOWN IN THE TITLE REPORT.
4. "RECORD OF SURVEY – PLSS SUBDIVISION" FOR TOWNSHIP 1 NORTH, RANGE 3 WEST AS FOUND IN MCR BOOK 638 OF MAPS, PAGE 32, PREPARED BY BRENT J. SMITH, RLS #29891, WITH RBF CONSULTING AND DATED MAY 29, 2003 WAS USED TO ASSIST WITH THE RECOVERY OF THE SECTION CORNER AND QUARTER CORNER MONUMENTS SHOWN.
5. "RECORD OF SURVEY N-NEC DURANGO STREET & YUMA ROAD" FOUND IN MCR BOOK 1689 OF MAPS, PAGE 36; "MAP OF DEDICATION OF DURANGO-MILLER 247" FOUND IN MCR BOOK 1678 OF MAPS, PAGE 37; "MINOR LAND DIVISION" FOUND IN MCR BOOK 1556 OF MAPS, PAGE 31; AND "RECORD OF SURVEY SEC I-10 & MILLER ROAD" FOUND IN MCR BOOK 1370 OF MAPS, PAGE 28 WERE USED AS REFERENCE.
6. "RIGHT-OF-WAY PLANS OF THE EHRENBERG – PHOENIX HIGHWAY SR 85 – VERRADO WAY 010 MA 112 F0119 010-A(232)T" AS FOUND ON ARIZONA DEPARTMENT OF TRANSPORTATION (ADOT) DRAWING NO. D-7-T-1031 AND PREPARED BY ILIJA KNEZEVIC, RLS #39229, WITH AECOM DATED JUNE 17, 2021, AS WELL AS "RESULTS OF SURVEY EHRENBERG – PHOENIX HIGHWAY TONOPAH T.I. – SR 303L 010 MA 094 H6877 01"R AS FOUND IN ADOT DRAWING NO. D-07-T-976 AND PREPARED BY JOSEPH R. DAVIS, RLS #42014, WITH AZTEC DATED DECEMBER 13, 2008 WERE USED AS REFERENCE TO CHECK THE ADOT AND CITY OF BUCKEYE RIGHT-OF-WAY SHOWN.
7. OWNER INFORMATION, DOCUMENT NUMBERS, AND APN IF SHOWN ARE ACCURATE AS OF THE DATE OF THIS SURVEY.
8. BRASS CAP MONUMENTS SHOWN FOLLOW SIZE AND MATERIAL REQUIREMENTS OF THE APPLICABLE MARICOPA ASSOCIATION OF GOVERNMENTS (MAG) OR ADOT STANDARD DETAILS.
9. THIS SURVEY PERFORMED UTILIZING GPS TECHNIQUES TIED TO THE SMARTNET REAL TIME NETWORK (RTN). MEASUREMENTS TIED TO SMARTNET POINTS "AZGE" AND "AZTH".

LEGEND

———	RIGHT OF WAY LINE
— · — —	SECTION LINE
- - - - - -	EASEMENT (ESMT) LINE AS NOTED
——— - ———	CENTER LINE
— — · —	MCDOT RIGHT OF WAY LIMITS
▲	PROPERTY CORNER PER M.A.G. 120 TYPE C
○	INTERSECTION MONUMENT PER M.A.G. 120 TYPE B
⊙ ▣	FOUND MONUMENT AS NOTED
APN	ASSESSOR'S PARCEL NUMBER
BK	BOOK
CL	CENTER LINE
DE	DRAINAGE EASEMENT
FND	FOUND
MCR	MARICOPA COUNTY RECORDER
PG	PAGE
PUE	PUBLIC UTILITY EASEMENT
R/W	RIGHT OF WAY

RECORD LEGAL DESCRIPTION FOR APN 504-25-014C:

THE LAND REFERRED TO HEREIN BELOW IS SITUATED IN THE COUNTY OF MARICOPA, STATE OF ARIZONA AND IS DESCRIBED AS FOLLOWS:

THE NORTHEAST QUARTER OF THE NORTHEAST QUARTER OF THE NORTHWEST QUARTER OF SECTION 17, TOWNSHIP 1 NORTH, RANGE 3 WEST OF THE GILA AND SALT RIVER BASE AND MERIDIAN, MARICOPA COUNTY, ARIZONA;

EXCEPT THAT PORTION THEREOF WHICH LIES NORTHERLY OF THE FOLLOWING DESCRIBED LINE:

BEGINNING AT A POINT ON THE NORTH LINE OF SAID SECTION 17, WHICH POINT BEARS NORTH 89 DEGREES 48 MINUTES 02 SECONDS EAST 2813.08 FEET FROM THE NORTHWEST CORNER THEREOF;

THENCE SOUTH 0 DEGREES 11 MINUTES 58 SECONDS EAST 50.00 FEET;

THENCE SOUTH 89 DEGREES 48 MINUTES 02 SECONDS WEST 485.00 FEET;

THENCE SOUTH 78 DEGREES 45 MINUTES 04 SECONDS WEST 419.27 FEET TO THE POINT OF BEGINNING;

EXCEPT THAT PORTION OF THE EAST HALF OF THE NORTHEAST QUARTER OF THE NORTHWEST QUARTER OF SECTION 17, TOWNSHIP 1 NORTH, RANGE 3 WEST OF THE GILA AND SALT RIVER BASE AND MERIDIAN, MARICOPA COUNTY, ARIZONA, MORE PARTICULARLY DESCRIBED AS FOLLOWS:

BEGINNING AT THE SOUTHEAST CORNER OF SAID EAST HALF FROM WHICH A 3-INCH TOWN OF BUCKEYE BRASS CAP FLUSH MARKING THE NORTH QUARTER CORNER OF SAID SECTION 17 BEARS NORTH 00 DEGREES 17 MINUTES 56 SECONDS EAST 1312.17 FEET;

THENCE NORTH 89 DEGREES 51 MINUTES 38 SECONDS WEST 660.05 FEET ALONG THE SOUTH LINE OF SAID EAST HALF TO AN ALUMINUM CAPPED REBAR STAMPED 21081 MARKING THE SOUTHWEST CORNER OF SAID EAST HALF;

THENCE NORTH 00 DEGREES 17 MINUTES 12 SECONDS EAST 993.86 FEET ALONG THE WEST LINE OF SAID EAST HALF TO THE CENTERLINE OF A 1 00-FOOT EASEMENT FOR ELECTRIC TRANSMISSION LINES, RECORDED IN BOOK 67, PAGE 479, MARICOPA COUNTY RECORDS, BEING MEASURED AT THE CENTERLINE OF THE EXISTING ELECTRIC TRANSMISSION TOWERS;

THENCE SOUTH 69 DEGREES 17 MINUTES 56 SECONDS EAST 704.37 FEET ALONG THE CENTERLINE OF SAID ELECTRIC TRANSMISSION EASEMENT TO THE EAST LINE OF SAID EAST HALF;

THENCE SOUTH 00 DEGREES 17 MINUTES 56 SECONDS WEST 746.44 FEET ALONG SAID EAST LINE TO THE POINT OF BEGINNING.

RIGHT OF WAY DEDICATION LEGAL DESCRIPTION FOR APN 504-25-014C:

THAT PORTION OF THE PARCEL OF LAND DESCRIBED IN MARICOPA COUNTY RECORDER (MCR) DOCUMENT # 2023-0658996 LYING IN THE NORTHWEST QUARTER OF SECTION 17, TOWNSHIP 1 NORTH, RANGE 3 WEST OF THE GILA AND SALT RIVER MERIDIAN, MARICOPA COUNTY, ARIZONA, AND MORE PARTICULARLY DESCRIBED AS FOLLOWS:

COMMENCING AT THE TOWN OF BUCKEYE BRASS CAP IN HAND HOLE STAMPED RLS 10344 FOUND AT THE CENTER OF SAID SECTION 17 FROM WHICH THE TOWN OF BUCKEYE BRASS CAP FLUSH FOUND AT THE NORTH QUARTER CORNER OF SAID SECTION 17 BEARS NORTH 00 DEGREE 17 MINUTES 39 SECONDS EAST A DISTANCE OF 2,624.19 FEET, SAID LINE BEING THE EAST LINE OF SAID NORTHWEST QUARTER, AND SAID LINE BEING THE BASIS OF BEARINGS FOR THIS DESCRIPTION;

THENCE ALONG SAID EAST LINE, NORTH 00 DEGREES 17 MINUTES 39 SECONDS EAST A DISTANCE OF 2,058.53 FEET TO A PK NAIL WITH WASHER STAMPED "RLS 31020" FOUND AT THE SOUTHEAST CORNER OF SAID PARCEL OF LAND, SAID POINT BEING THE POINT OF BEGINNING;

THENCE ALONG THE SOUTH LINE OF SAID PARCEL OF LAND, NORTH 69 DEGREES 17 MINUTES 48 SECONDS WEST A DISTANCE OF 42.68 FEET TO A POINT ON A LINE PARALLEL WITH AND 40.00 FEET DISTANT FROM SAID EAST LINE;

THENCE ALONG SAID PARALLEL LINE, NORTH 00 DEGREES 17 MINUTES 39 SECONDS EAST A DISTANCE OF 127.22 FEET TO A POINT;

THENCE NORTH 89 DEGREES 42 MINUTES 21 SECONDS WEST A DISTANCE OF 10.00 FEET TO A POINT ON A LINE PARALLEL WITH AND 50.00 FEET DISTANT FROM SAID EAST LINE;

THENCE ALONG LAST-MENTIONED PARALLEL LINE, NORTH 00 DEGREES 17 MINUTES 39 SECONDS EAST A DISTANCE OF 161.44 FEET TO A POINT;

THENCE NORTH 04 DEGREES 36 MINUTES 27 SECONDS EAST A DISTANCE OF 132.95 FEET TO A POINT ON A LINE PARALLEL WITH AND 40.00 FEET DISTANT FROM SAID EAST LINE;

THENCE ALONG LAST-MENTIONED PARALLEL LINE, NORTH 00 DEGREES 17 MINUTES 39 SECONDS EAST A DISTANCE OF 26.57 FEET;

THENCE NORTH 42 DEGREES 36 MINUTES 53 SECONDS WEST A DISTANCE OF 51.61 FEET TO A POINT ON A LINE PARALLEL WITH AND 65.00 FEET DISTANT FROM THE NORTH LINE OF SAID NORTHWEST QUARTER;

THENCE ALONG LAST-MENTIONED PARALLEL LINE, NORTH 89 DEGREES 50 MINUTES 14 SECONDS WEST A DISTANCE OF 141.11 FEET TO THE POINT OF CURVATURE FOR A TANGENT CURVE TO THE LEFT BEING CONCAVE SOUTHERLY AND HAVING A RADIUS OF 1,065.00 FEET;

THENCE ALONG SAID TANGENT CURVE THROUGH A DELTA ANGLE OF 15 DEGREES 29 MINUTES 20 SECONDS AN ARC DISTANCE OF 287.90 FEET TO A POINT;

THENCE SOUTH 73 DEGREES 13 MINUTES 28 SECONDS WEST A DISTANCE OF 78.04 FEET TO A POINT;

THENCE SOUTH 68 DEGREES 08 MINUTES 48 SECONDS WEST A DISTANCE OF 91.70 FEET TO A POINT ON THE WEST LINE OF THE NORTHEAST QUARTER OF THE NORTHEAST QUARTER OF SAID NORTHWEST QUARTER;

THENCE ALONG SAID WEST LINE, NORTH 00 DEGREES 17 MINUTES 13 SECONDS EAST A DISTANCE OF 42.84 FEET TO A HALF-INCH REBAR FOUND AT THE NORTHWEST CORNER OF SAID PARCEL, SAID POINT ALSO BEING ON THE EXISTING SOUTH RIGHT-OF-WAY LINE OF YUMA ROAD AS DESCRIBED IN MCR DOCKET 10985, PAGE 485;

THENCE ALONG SAID EXISTING SOUTH RIGHT-OF-WAY LINE, NORTH 79 DEGREES 06 MINUTES 48 SECONDS EAST A DISTANCE OF 354.53 FEET TO AN ARIZONA DEPARTMENT OF TRANSPORTATION (ADOT) ALUMINUM CAP FLUSH;

THENCE CONTINUING ALONG SAID EXISTING SOUTH RIGHT-OF-WAY LINE, SOUTH 89 DEGREES 50 MINUTES 14 SECONDS EAST A DISTANCE OF 312.32 FEET TO A PK NAIL WITH WASHER STAMPED "RLS 31020" FOUND AT THE NORTHEAST CORNER OF SAID PARCEL, SAID POINT ALSO BEING ON SAID EAST LINE OF THE NORTHWEST QUARTER OF SECTION 17;

THENCE ALONG SAID EAST LINE, SOUTH 00 DEGREES 17 MINUTES 39 SECONDS WEST A DISTANCE OF 515.65 FEET TO THE POINT OF BEGINNING.

CONTAINING AN AREA OF 34,803 SQUARE FEET OR 0.7990 ACRES, MORE OR LESS.

AREA TABLE		
DESCRIPTION	AREA (S.F.)	AREA (AC)
RECORD PARCEL	247,004	5.6704
RIGHT-OF-WAY	34,803	0.7990
LOT 1	145,467	3.3395
LOT 2	66,734	1.5320

LOT 1:

THAT PORTION OF THE PARCEL OF LAND DESCRIBED IN MARICOPA COUNTY RECORDER (MCR) DOCUMENT # 2023-0658996 LYING IN THE NORTHWEST QUARTER OF SECTION 17, TOWNSHIP 1 NORTH, RANGE 3 WEST OF THE GILA AND SALT RIVER MERIDIAN, MARICOPA COUNTY, ARIZONA, AND MORE PARTICULARLY DESCRIBED AS FOLLOWS:

COMMENCING AT THE TOWN OF BUCKEYE BRASS CAP FLUSH FOUND AT THE NORTH QUARTER CORNER OF SAID SECTION 17 FROM WHICH THE TOWN OF BUCKEYE BRASS CAP IN HAND HOLE STAMPED RLS 10344 FOUND AT THE CENTER OF SAID SECTION 17 BEARS SOUTH 00 DEGREE 17 MINUTES 39 SECONDS WEST A DISTANCE OF 2,624.19 FEET, SAID LINE BEING THE EAST LINE OF SAID NORTHWEST QUARTER, AND SAID LINE BEING THE BASIS OF BEARINGS FOR THIS DESCRIPTION;

THENCE ALONG SAID EAST LINE, SOUTH 00 DEGREES 17 MINUTES 39 SECONDS WEST A DISTANCE OF 565.65 FEET TO A PK NAIL WITH WASHER STAMPED "RLS 31020" FOUND AT THE SOUTHEAST CORNER OF SAID PARCEL OF LAND;

THENCE ALONG THE SOUTH LINE OF SAID PARCEL OF LAND, NORTH 69 DEGREES 17 MINUTES 48 SECONDS WEST A DISTANCE OF 42.68 FEET TO A POINT ON A LINE PARALLEL WITH AND 40.00 FEET DISTANT FROM SAID EAST LINE, SAID POINT BEING THE POINT OF BEGINNING;

THENCE CONTINUING ALONG THE SOUTH LINE OF SAID PARCEL, NORTH 69 DEGREES 17 MINUTES 48 SECONDS WEST A DISTANCE OF 661.62 FEET TO AN ALUMINUM CAP STAMPED "RLS 42137" FOUND AT THE SOUTHWEST CORNER OF SAID PARCEL;

THENCE ALONG THE WEST LINE OF SAID PARCEL, NORTH 00 DEGREES 17 MINUTES 13 SECONDS EAST A DISTANCE OF 157.74 FEET;

THENCE NORTH 68 DEGREES 08 MINUTES 48 SECONDS EAST A DISTANCE OF 91.70 FEET;

THENCE NORTH 73 DEGREES 13 MINUTES 28 SECONDS EAST A DISTANCE OF 78.04 FEET TO A POINT ON A NON-TANGENT CURVE TO THE RIGHT BEING CONCAVE SOUTHERLY AND HAVING A RADIUS OF 1065.00 FEET BEARING SOUTH 15 DEGREES 19 MINUTES 34 SECONDS EAST;

THENCE ALONG SAID CURVE THRU A DELTA ANGLE OF 11 DEGREES 49 MINUTES 44 SECONDS AN ARC LENGTH OF 219.87 FEET;

THENCE SOUTH 00 DEGREES 10 MINUTES 07 SECONDS WEST A DISTANCE OF 36.78 FEET;

THENCE SOUTH 89 DEGREES 49 MINUTES 53 SECONDS EAST A DISTANCE OF 34.16 FEET;

THENCE SOUTH 00 DEGREES 10 MINUTES 07 SECONDS WEST A DISTANCE OF 248.27 FEET;

THENCE SOUTH 69 DEGREES 17 MINUTES 48 SECONDS EAST A DISTANCE OF 202.89 FEET;

THENCE SOUTH 89 DEGREES 42 MINUTES 21 SECONDS EAST A DISTANCE OF 9.31 FEET;

THENCE CONTINUING SOUTH 89 DEGREES 42 MINUTES 21 SECONDS EAST A DISTANCE OF 10.00 FEET TO A POINT ON A LINE PARALLEL WITH AND 40.00 FEET DISTANT FROM THE EAST LINE OF SAID NORTHWEST QUARTER;

THENCE ALONG SAID PARALLEL LINE, SOUTH 00 DEGREES 17 MINUTES 39 SECONDS WEST A DISTANCE OF 127.22 FEET TO THE POINT OF BEGINNING;

CONTAINING AN AREA OF 145,467 SQUARE FEET OR 3.3395 ACRES, MORE OR LESS.

LOT 2:

THAT PORTION OF THE PARCEL OF LAND DESCRIBED IN MARICOPA COUNTY RECORDER (MCR) DOCUMENT # 2023-0658996 LYING IN THE NORTHWEST QUARTER OF SECTION 17, TOWNSHIP 1 NORTH, RANGE 3 WEST OF THE GILA AND SALT RIVER MERIDIAN, MARICOPA COUNTY, ARIZONA, AND MORE PARTICULARLY DESCRIBED AS FOLLOWS:

COMMENCING AT THE TOWN OF BUCKEYE BRASS CAP FLUSH FOUND AT THE NORTH QUARTER CORNER OF SAID SECTION 17 FROM WHICH THE TOWN OF BUCKEYE BRASS CAP IN HAND HOLE STAMPED RLS 10344 FOUND AT THE CENTER OF SAID SECTION 17 BEARS SOUTH 00 DEGREE 17 MINUTES 39 SECONDS WEST A DISTANCE OF 2,624.19 FEET, SAID LINE BEING THE EAST LINE OF SAID NORTHWEST QUARTER, AND SAID LINE BEING THE BASIS OF BEARINGS FOR THIS DESCRIPTION;

THENCE ALONG SAID EAST LINE, SOUTH 00 DEGREES 17 MINUTES 39 SECONDS WEST A DISTANCE OF 423.56 FEET;

THENCE NORTH 89 DEGREES 42 MINUTES 21 SECONDS WEST A DISTANCE OF 50.00 FEET TO A POINT ON A LINE PARALLEL WITH AND 50.00 FEET DISTANT FROM SAID EAST LINE, SAID POINT ALSO BEING THE POINT OF BEGINNING;

THENCE NORTH 89 DEGREES 42 MINUTES 21 SECONDS WEST A DISTANCE OF 9.31 FEET;

THENCE NORTH 69 DEGREES 17 MINUTES 48 SECONDS WEST A DISTANCE OF 202.89 FEET;

THENCE NORTH 00 DEGREES 10 MINUTES 07 SECONDS EAST A DISTANCE OF 248.27 FEET;

THENCE NORTH 89 DEGREES 49 MINUTES 53 SECONDS WEST A DISTANCE OF 34.16 FEET;

THENCE NORTH 00 DEGREES 10 MINUTES 07 SECONDS EAST A DISTANCE OF 36.78 FEET TO A POINT ON A NON-TANGENT CURVE TO THE RIGHT BEING CONCAVE SOUTHERLY WITH A RADIUS OF 1,065.00 FEET BEARING SOUTH 03 DEGREES 29 MINUTES 51 SECONDS EAST;

THENCE ALONG SAID CURVE THROUGH A DELTA ANGLE OF 03 DEGREES 39 MINUTES 37 SECONDS AN ARC LENGTH OF 68.03 FEET TO A POINT ON A LINE PARALLEL WITH AND 65.00 FEET DISTANT FROM THE NORTH LINE OF SAID NORTHWEST QUARTER;

THENCE ALONG SAID PARALLEL LINE, SOUTH 89 DEGREES 50 MINUTES 14 SECONDS EAST A DISTANCE OF 141.11 FEET;

THENCE SOUTH 42 DEGREES 36 MINUTES 53 SECONDS WEST A DISTANCE OF 51.61 FEET TO A POINT ON A LINE PARALLEL WITH AND 40.00 FEET DISTANT FROM SAID EAST LINE;

THENCE ALONG SAID PARALLEL LINE, SOUTH 00 DEGREES 17 MINUTES 39 SECONDS WEST A DISTANCE OF 26.57 FEET;

THENCE SOUTH 04 DEGREES 36 MINUTES 27 SECONDS WEST A DISTANCE OF 132.95 FEET TO A POINT ON A LINE PARALLEL WITH AND 50.00 FEET DISTANT FROM SAID EAST LINE;

THENCE ALONG SAID PARALLEL LINE, SOUTH 00 DEGREES 17 MINUTES 39 SECONDS WEST A DISTANCE OF 161.44 FEET TO THE POINT OF BEGINNING.

CONTAINING AN AREA OF 66,734 SQUARE FEET OR 1.5320 ACRES, MORE OR LESS

Entellus™
3033 N. 44th Street, Suite 250
Phoenix, AZ 85018
Phone 602.264.6831
Fax 602.244.8847
Website: www.entellus.com

SURVEYOR:

REGISTERED LAND SURVEYOR
CERTIFICATE NO.
33874
DANIEL G. FRANCETIC
Date Signed 11/25/24
ARIZONA U.S.A.

VERSIONS:

X	DATE	DESCRIPTION
1	02/27/24	INITIAL MOD SUBMITTAL TO CITY OF BUCKEYE
2	03/07/24	INITIAL MS SUBMITTAL TO CITY OF BUCKEYE
3	06/03/24	2ND SUBMITTAL TO CITY OF BUCKEYE
4	09/26/24	3RD SUBMITTAL TO CITY OF BUCKEYE
5	11/25/24	FINAL SUBMITTAL TO CITY OF BUCKEYE

MINOR SUBDIVISION
YUMA CLIMATE CONTROLLED SELF STORAGE
GENERAL NOTES - LEGAL DESCRIPTION

DATE:	11/25/24
SCALE:	
DESIGN:	JME
DRAFTED:	JME
QA/QC:	DGF
ENT. PROJ #:	228001
SHEET: MS	2 OF 3

MINOR SUBDIVISION
YUMA CLIMATE CONTROLLED SELF STORAGE
PART OF THE NORTHWEST 1/4, SECTION 17, TOWNSHIP 1 NORTH, RANGE 3 WEST, G&S.R.B&M. MARICOPA COUNTY, ARIZONA

LINE TABLE		
#	LENGTH	BEARING
L1	10.00'	N89°42'21"W
L2	26.57'	N00°17'39"E
L3	78.04'	S73°13'28"W
L4	91.70'	S68°08'48"W

LINE TABLE		
#	LENGTH	BEARING
L5	36.78'	S00°10'07"W
L6	34.16'	S89°49'53"E
L7	9.31'	S89°42'21"E
L8	50.00'	N89°42'21"W

CURVE TABLE				
#	LENGTH	RADIUS	TANGENT	DELTA
C1	287.90'	1065.00'	144.84'	15°29'20"
C2	434.21'	1130.00'	219.81'	22°00'58"
C3	219.87'	1065.00'	110.33'	11°49'44"
C4	68.03'	1065.00'	34.03'	3°39'37"

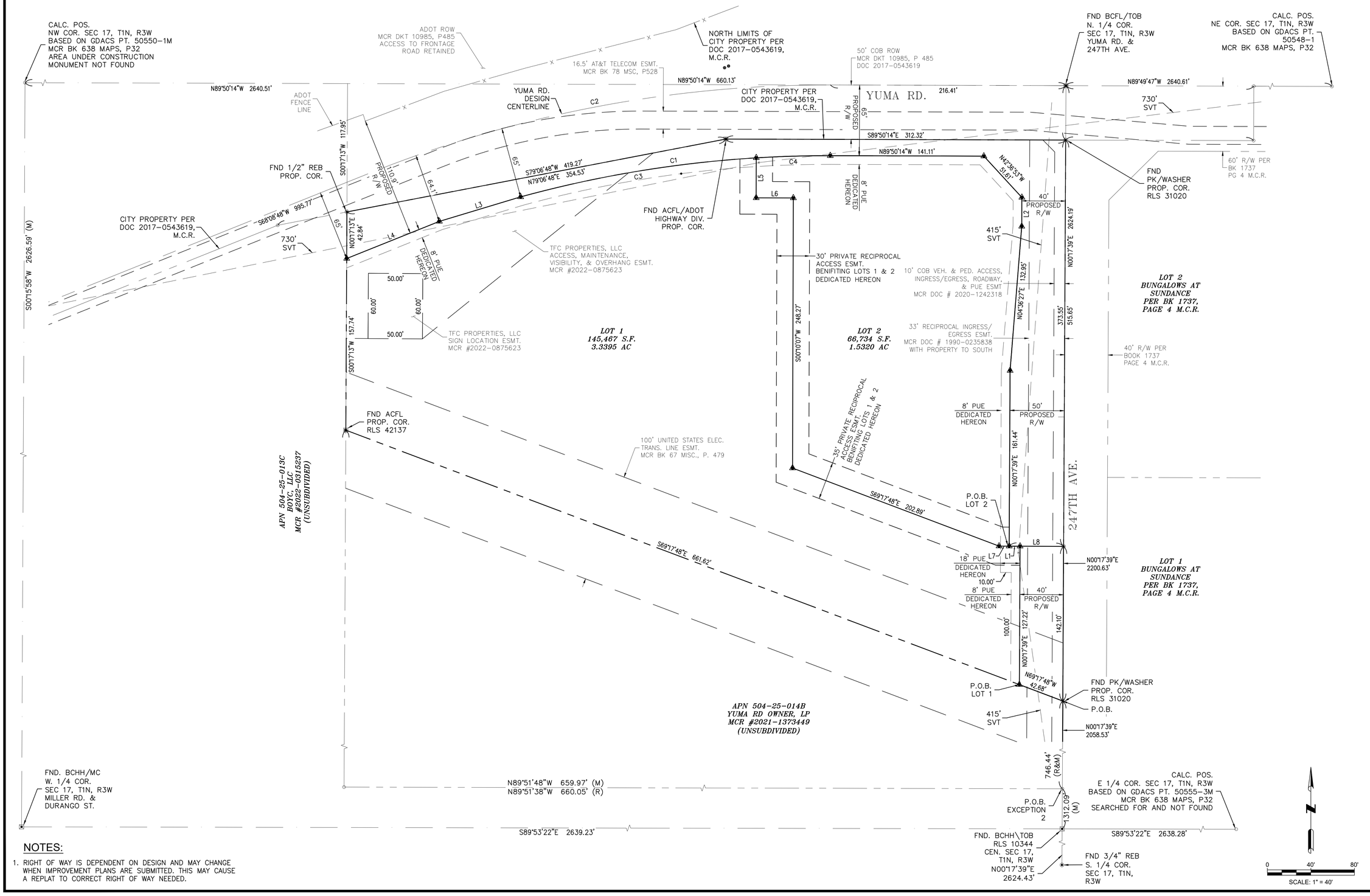

NOTES:

1. RIGHT OF WAY IS DEPENDENT ON DESIGN AND MAY CHANGE WHEN IMPROVEMENT PLANS ARE SUBMITTED. THIS MAY CAUSE A REPLAT TO CORRECT RIGHT OF WAY NEEDED.

Entellus™
3033 N. 44th Street, Suite 250
Phoenix, AZ 85018
Phone 602.244.8456
Fax 602.244.8947
Website: www.entellus.com

SURVEYOR:

REGISTERED LAND SURVEYOR CERTIFICATE NO. 33874 DANIEL G. FRANCETIC Date Signed 11/25/24 ARIZONA, U.S.A.

VERSIONS:

	DATE	DESCRIPTION
X		INITIAL MOD SUBMITTAL TO CITY OF BUCKEYE
1	02/27/24	INITIAL MS SUBMITTAL TO CITY OF BUCKEYE
2	03/07/24	2ND SUBMITTAL TO CITY OF BUCKEYE
3	06/03/24	3RD SUBMITTAL TO CITY OF BUCKEYE
4	09/26/24	FINAL SUBMITTAL TO CITY OF BUCKEYE
5	11/25/24	

MINOR SUBDIVISION
YUMA CLIMATE CONTROLLED SELF STORAGE

DATE:	11/25/24
SCALE:	
DESIGN:	JME
DRAFTED:	JME
QA/QC:	DGF
ENT. PROJ #:	228001
SHEET: MS	3 OF: 3

CITY OF BUCKEYE
Regular Council Meeting
COUNCIL ACTION REPORT

MEETING DATE: 12/17/24	**AGENDA ITEM:** 4.F. DS - The Mix Minor Subdivision
DATE PREPARED: 12/17/24	**DISTRICT NO.:** Council District No. 5
STAFF LIAISON: Ken Galica, Planning Manager, kgalica@buckeyeaz.gov, (623) 349-6214	
DEPARTMENT: Development Services	**AGENDA ITEM TYPE:** Consent Agenda Items / New Business

ACTION/MOTION: (This language identifies the formal motion to be made by the Council)
Council to take action on a Minor Subdivision titled "The Mix" on approximately 30.02 net acres of property located at the southeast corner of Verrado Way and Roosevelt Street.

SUMMARY

PROJECT DESCRIPTION:
Ted Luther, Colliers Engineering & Design, on behalf of property owner Banner Health, is requesting approval of a Minor Subdivision concerning approximately 30.02 net acres of property located at the southeast corner of Verrado Way and Roosevelt Street. The proposed Minor Subdivision divides the existing parcel into five lots, dedicates public right-of-way for Roosevelt Street, Verrado Way and Fillmore Street, and dedicates various easements to facilitate development of the site with "The Mix on Roosevelt", a horizontal mixed-use project consisting of separate but integrated retail and multi-family residential components. The City Council approved a rezoning of this site to Planned Area Development on November 19, 2024.

BENEFITS:

Approval of the Minor Subdivision will facilitate development of a high quality, walkable, mixed-use development consistent with the City's high expectations for The Landing.

FINANCIAL IMPACT STATEMENT:
See Planning Financial Impact Statement.

FINANCIAL IMPACT STATEMENT:
Although a fiscal impact analysis has not been conducted on this specific project, all new development will have an ongoing fiscal impact on the city. The development is responsible for construction of all infrastructure necessary to serve the site and will generate one-time revenue for the city such as permit fees, construction sales tax and development impact fees. Longer term fiscal impacts include increased demands for municipal services, the costs of which may or may not be offset by increased property values/tax levies, city sales tax, state shared revenues and the increased demand for commercial and retail development. Any areas that will be maintained by the city are constructed by the developer and then conveyed to the city two years after construction.

Items related to a project or facility location must include an attached vicinity map for Council Review.
ATTACHMENTS:
Exhibit A - Aerial Vicinity Map.pdf
Exhibit B - Minor Subdivision Narrative.pdf
Exhibit C - Proposed Minor Subdivision.pdf

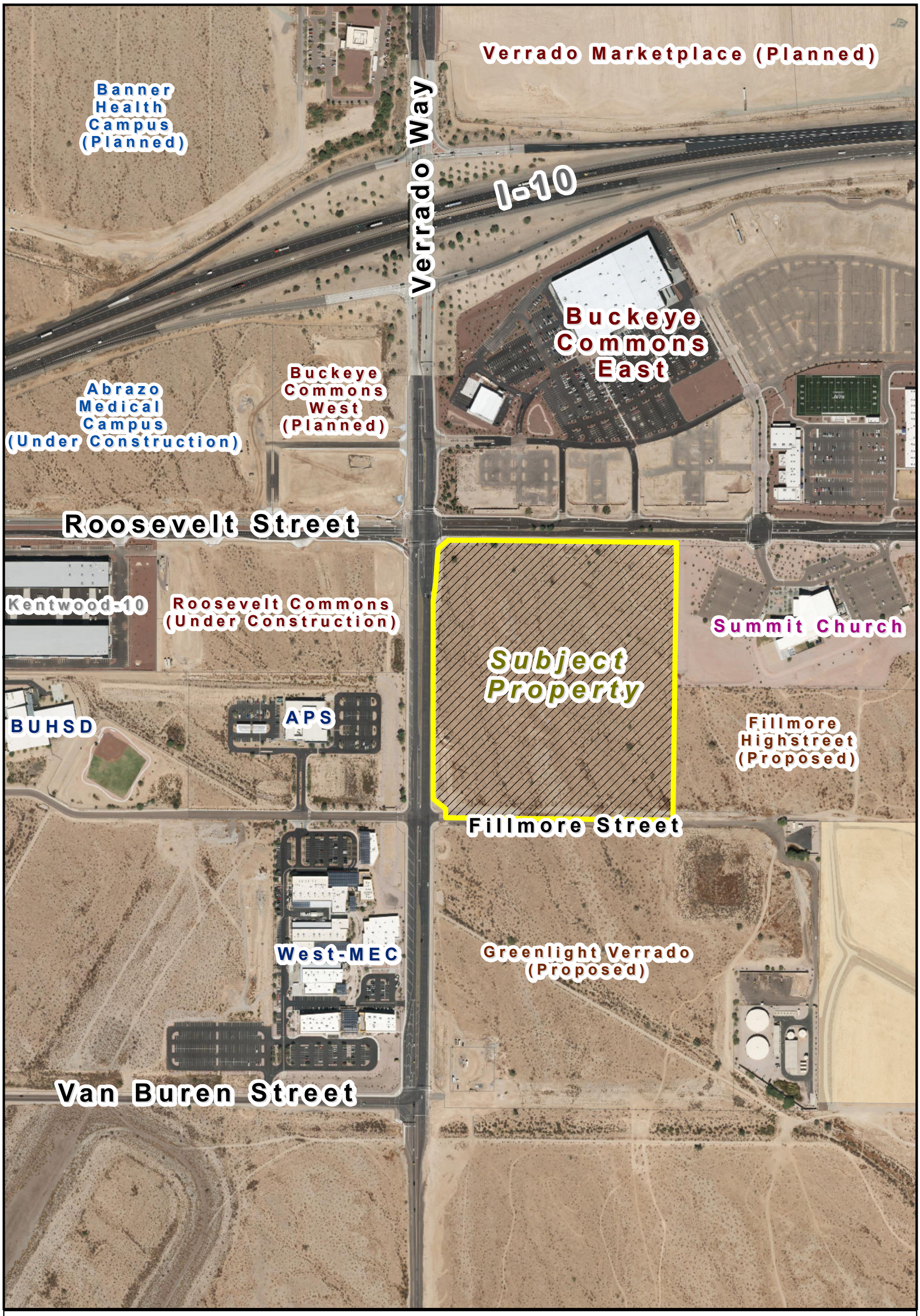

VICINITY MAP

PLZS-24-0021

The Mix on Roosevelt - Minor Subdivision

Council District #5

BUCKEYE, AZ

N W E S

Exhibit B

2R PLZS-24-0021 RECEIVED NOV 19 2024 AL

2141 E Highland Avenue
Suite 250
Phoenix, Arizona 85016
Main: 877 627 3772
colllliersengineering.com

Colliers Engineering & Design

Project Narrative – Minor Land Division

To: Planning Department

City of Buckeye

From: Ted B. Luther, PE

Date: November 19, 2024

Subject: Project Narrative

1R PLZS-24-0021 The Mix on Roosevelt

Project No.: 2517.0201

Parcel No. 502-35-003F

SEC of Roosevelt Road and Verrado Way, Buckeye, Arizona

The scope of this project is to divide the subject parcel into 5 separate lots. The original parcel is 31.82 gross acres, 30.02 net acres. Total right of way area dedicated will be 1.80 acres. A public utility easement will be dedicated along Roosevelt Road, Verrado Way and Fillmore Road. These dedications and lot splits will be for the purpose of developing the site with a horizontally integrated mixed-use development. Below is a table indicating the size of each lot.

LOT DATA

LOT TABLE		
LOT NO.	AREA (SQ.FT)	AREA (ACRES)
LOT 1	35866	0.82
LOT 2	369491	8.48
LOT 3	99236	2.28
LOT 4	50728	1.16
LOT 5	752561	17.28

TOTAL LOT AREA – 1,307,882 SQ. FT. OR 30.02 AC

D:\Git\Colliers\Templafy\Template libraries\Documents\Colliers Engineering\Engineering Memo.docx

Exhibit C

2R PLZSP-24-0021 RECEIVED NOV 27 2024 AL

MINOR SUBDIVISION
FOR
THE MIX

BEING A MINOR SUBDIVISION LOCATED WITHIN A PORTION OF GOVERNMENT LOT 4 OF SECTION 6, TOWNSHIP 1 NORTH, RANGE 2 WEST OF THE GILA AND SALT RIVER MERIDIAN, MARICOPA COUNTY, ARIZONA.

DEDICATION

STATE OF ARIZONA)
) SS
COUNTY OF MARICOPA)

KNOW ALL PERSONS BY THESE PRESENTS:

THAT **BANNER HEALTH, AN ARIZONA NONPROFIT CORPORATION,** AS OWNER, HAS SUBDIVIDED UNDER THE NAME OF **"THE MIX"**, A MINOR SUBDIVISION, LOCATED IN A PORTION OF GOVERNMENT LOT 4 OF SECTION 6, TOWNSHIP 1 NORTH, RANGE 2 WEST, OF THE GILA AND SALT RIVER MERIDIAN, MARICOPA COUNTY, ARIZONA, AS SHOWN AND DIVIDED HEREON AND DOES HEREBY PUBLISH THIS MINOR SUBDIVISION AS AND FOR THE MINOR SUBDIVISION OF **"THE MIX"** AND DECLARES THAT THIS MINOR SUBDIVISION SETS FORTH THE LOCATION AND GIVES THE DIMENSIONS OF EACH LOT, STREET, AND EASEMENT CONSTITUTING SAME, AND THAT EACH LOT, STREET, AND EASEMENT SHALL BE KNOWN BY THE NUMBER AND/OR NAME GIVEN TO EACH RESPECTIVELY AS SHOWN ON THIS PLAT.

OWNER HEREBY DEDICATES TO THE CITY OF BUCKEYE FEE TITLE TO ALL PUBLIC RIGHT-OF-WAYS AS SHOWN ON THE PLAT.

OWNER HEREBY GRANTS TO THE CITY OF BUCKEYE A NON-EXCLUSIVE EASEMENT OVER, UPON AND ACROSS THE AREAS DESIGNATED AS PUBLIC UTILITY EASEMENTS AS SHOWN ON THE PLAT FOR THE PURPOSE OF INSTALLING, CONSTRUCTING, MAINTAINING, REPAIRING, REPLACING AND UTILIZING PUBLIC UTILITIES.

OWNER HEREBY GRANTS TO THE CITY OF BUCKEYE A NON-EXCLUSIVE EASEMENT OVER, UPON AND ACROSS THE AREAS DESIGNATED AS SIGHT VISIBILITY TRIANGLES FOR THE PURPOSE OF ENSURING THAT THESE AREAS REMAIN FREE OF SIGHT VISIBILITY OBSTRUCTIONS AS PER THE ENGINEERING DESIGN STANDARDS.

THE MAINTENANCE OF LANDSCAPING WITHIN THE OPEN SPACES, LANDSCAPED TRACTS, RETENTION BASINS AND PARKS SHALL BE THE RESPONSIBILITY OF THE OWNER OR THE ASSOCIATION FORMED BY THE OWNER.

THE MAINTENANCE OF LANDSCAPING WITHIN THE ADJACENT PUBLIC RIGHT-OF-WAYS, INCLUDING; LANDSCAPED MEDIANS WITHIN COLLECTORS AND LOCAL STREETS AND LANDSCAPED AREAS BETWEEN THE CURB AND THE DETACHED SIDEWALK, SHALL BE THE RESPONSIBILITY OF THE ADJACENT PROPERTY OWNER OR THE PROPERTY ASSOCIATION FORMED BY THE ADJACENT PROPERTY.

OWNER HEREBY GRANTS TO THE UNITED STATES OF AMERICA DEPARTMENT OF THE AIR FORCE ('USAF') AN AVIGATION EASEMENT OVER AND ACROSS THIS PLAT AND EVERY LOT AND PARCEL THEREOF, WHICH EASEMENT SHALL INCLUDE, BUT NOT BE LIMITED TO; THE RIGHT OF FLIGHT OF AIRCRAFT OVER THIS PLAT, TOGETHER WITH ITS ATTENDANT NOISE, VIBRATIONS, FUMES, DUST, FUEL AND LUBRICANT PARTICLES, AND ALL OTHER EFFECTS THAT MAY BE CAUSED BY THE OPERATION OF AIRCRAFT LANDING AT, OR TAKING OFF FROM, OR OPERATING AT OR ON LUKE AIR FORCE BASE AND AUXILIARY FIELD.

BANNER HEALTH, AN ARIZONA NONPROFIT CORPORATION ('OWNER') DOES HEREBY (1) RELEASE AND DISCHARGE THE USAF AND THE CITY OF BUCKEYE, AND (2) INDEMNIFY, DEFEND, AND HOLD HARMLESS THE CITY OF BUCKEYE, OF AND FROM ANY LIABILITY FOR ANY AND ALL CLAIMS FOR DAMAGES OF ANY KIND TO PERSONS OR PROPERTY THAT MAY ARISE AT ANY TIME IN THE FUTURE OVER, OR IN CONNECTION WITH AIRCRAFT OVERFLIGHTS FROM AIRCRAFT UTILIZING LUKE AIR FORCE BASE, WHETHER SUCH DAMAGE SHALL ORIGINATE FROM NOISE, VIBRATION, FUMES, DUST, FUEL AND LUBRICANT PARTICLES, AND ALL OTHER EFFECTS THAT MAY BE CAUSED BY THE OPERATION OF AIRCRAFT LANDING AT, OR TAKING OFF FROM, OR OPERATING AT OR ON LUKE AIR FORCE THIS INSTRUMENT SHALL RUN WITH THE LAND AND BE BINDING UPON OWNER AND ITS HEIRS, ASSIGNS, AND SUCCESSORS IN INTEREST TO THIS PLAT OR ANY PARCEL OR LOT THEREOF. THIS INSTRUMENT DOES NOT RELEASE THE USAF FROM LIABILITY FOR DAMAGE OR INJURY TO PERSON OR PROPERTY CAUSED BY FALLING AIRCRAFT OR FALLING PHYSICAL OBJECTS FROM AIRCRAFT, EXCEPT AS STATED HEREIN WITH RESPECT TO NOISE, FUMES, DUST, FUEL, AND LUBRICANT PARTICLES.

BANNER HEALTH, AN ARIZONA NONPROFIT CORPORATION ("OWNER") DOES HEREBY; (1) RELEASE AND DISCHARGE THE CITY OF BUCKEYE, AND (2) INDEMNIFY, DEFEND, AND HOLD HARMLESS THE CITY OF BUCKEYE, OF AND FROM ANY LIABILITY FOR ANY AND ALL CLAIMS FOR DAMAGES OF ANY KIND TO PERSONS OR PROPERTY THAT MAY ARISE AT ANY TIME IN THE FUTURE OVER, OR IN CONNECTION WITH THE AREAS LOCATED WITHIN THE NEWLY DEDICATED RIGHT-OF-WAY AS DEPICTED ON THIS PLAT UNTIL SUCH TIME THE RIGHT-OF-WAY IS IMPROVED TO CITY STANDARDS AND THOSE IMPROVEMENTS ARE APPROVED AND ACCEPTED BY THE CITY. THE MAINTENANCE OF THE AREA WITHIN ANY NEWLY DEDICATED RIGHT-OF-WAY AS SHOWN ON THIS PLAT SHALL BE THE RESPONSIBILITY OF THE ADJACENT OWNER/OR SUBSEQUENT ADJACENT OWNERS WITHIN THE BOUNDARY OF SAID PLAT UNTIL SUCH TIME THAT THE AREA WITHIN THE RIGHT-OF-WAY IS IMPROVED TO CITY STANDARD AND ACCEPTED BY THE CITY OF BUCKEYE.

ALL IMPROVEMENTS FOR STREETS AND PUBLIC UTILITIES OWNED AND OPERATED BY THE CITY, INSTALLED OR CONSTRUCTED BY OWNER WITHIN THE PUBLIC RIGHT-OF-WAYS, THE EASEMENTS, OR ANY TRACTS OR PARCELS HEREBY DEDICATED TO THE CITY OF BUCKEYE SHALL BE DEEMED TO HAVE BEEN DEDICATED BY OWNER TO THE CITY UPON THEIR COMPLETION; HOWEVER, SUCH TRANSFER SHALL NOT OCCUR UNTIL THE CITY OF BUCKEYE MANIFESTS ITS ACCEPTANCE BY SEPARATE FORMAL ACTION.

OWNER HEREBY GRANTS TO THE ULTIMATE OWNER OF LOTS 1 THROUGH 4 CREATED BY THIS PLAT, AN EASEMENT, OVER, UPON AND ACROSS THE ENTIRE PLAT FOR THE PURPOSE OF PROVIDING CONTINUOUS AND UNINTERRUPTED INGRESS AND EGRESS TO EACH PARCEL CREATED BY THIS PLAT.

THE EASEMENTS GRANTED WITHIN THIS DEDICATION ARE PERMANENT AND PERPETUAL AND SHALL RUN WITH THE LAND AND BE BINDING UPON OWNER AND ITS HEIRS, ASSIGNS, AND SUCCESSORS IN INTEREST TO THIS PLAT OR ANY PARCEL OR LOT THEREOF.

IN WITNESS WHEREOF:

OWNER HAS HEREUNTO CAUSED ITS CORPORATE NAME TO BE SIGNED AND ITS CORPORATE SEAL TO BE AFFIXED BY THE UNDERSIGNED, DULY AUTHORIZED OFFICER THIS _____ DAY OF _____ 2024.

BANNER HEALTH, AN ARIZONA NONPROFIT CORPORATION, AS OWNER.

BY: _____

ITS: _____

ACKNOWLEDGMENT

STATE OF _____)
) SS
COUNTY OF _____)

ON THIS, THE ___ DAY OF _____ 2024, BEFORE ME THE UNDERSIGNED NOTARY, _____, PERSONALLY APPEARED WHO ACKNOWLEDGED HIMSELF/HERSELF TO BE THE AUTHORIZED SIGNATORY OF **BANNER HEALTH, AN ARIZONA NONPROFIT CORPORATION** AND ACKNOWLEDGED THAT HE/SHE, BEING DULY AUTHORIZED SO TO DO, EXECUTED THIS IN WITNESS WHEREOF:

I HEREUNTO SET MY HAND AND OFFICIAL SEAL:

_____ _____ _____
NOTARY PUBLIC MY COMMISSION EXPIRES

APPROVAL

APPROVED BY THE COUNCIL OF THE CITY OF BUCKEYE ON THIS _____ DAY OF _____2024.

BY: _____
MAYOR

ATTEST: _____
CITY CLERK

I CERTIFY THAT ALL ENGINEERING CONDITIONS AND REQUIREMENTS HAVE BEEN COMPLIED WITH.

BY: _____ DATE: _____
BUCKEYE CITY ENGINEER

BY: _____ DATE: _____
DEVELOPMENT SERVICES DIRECTOR

BASIS OF BEARING

BASIS OF BEARING IS N00°26'05"E ALONG THE WEST LINE OF THE SOUTHWEST QUARTER OF SECTION 6, TOWNSHIP 1 NORTH, RANGE 2 WEST, OF THE GILA AND SALT RIVER MERIDIAN, MARICOPA COUNTY, ARIZONA, BETWEEN THE MONUMENTS AS SHOWN HEREON

REFERENCE DOCUMENTS

1. GENERAL LAND OFFICE SURVEY OF TOWNSHIP NO. 1 NORTH, RANGE NO. 2 WEST OFFICIALLY FILED 4-23-1883.
2. GENERAL LAND OFFICE RESURVEY OF TOWNSHIP NO. 1 NORTH, RANGE NO. 2 WEST, NO OFFICIALLY FILED DATE.
3. RESULTS OF SURVEY PER BOOK 499, PAGE 48, M.C.R.
4. RECORD OF SURVEY PER BOOK 617, PAGE 47, M.C.R.
5. RESULTS OF SURVEY PER BOOK 602, PAGE 30, M.C.R.
6. RECORD OF SURVEY PLSS SUBDIVISION (GDACS) PER BOOK 638, PAGE 33, M.C.R.
7. A.L.T.A./A.C.S.M. LAND TITLE SURVEY PER BOOK 900, PAGE 26, M.C.R.
8. FINAL PLAT OF "BUCKEYE PARKWAY CENTER" PER BOOK 948, PAGE 34, M.C.R.
9. RECORD OF SURVEY PER BOOK 1018, PAGE 25, M.C.R.
10. MINOR LAND DIVISION OF SUMMIT COMMUNITY CHURCH PHASE 1 PER BOOK 1441, PAGE 08, M.C.R.

FLOOD ZONE DESIGNATION

THE FOLLOWING FLOOD PLAIN DESIGNATION AND ASSOCIATED COMMENTS ARE COPIED DIRECTLY FROM THE FEDERAL EMERGENCY MANAGEMENT AGENCY (FEMA) WEBSITE. HILGARTWILSON, LLC AND THE UNDERSIGNED REGISTERED PROFESSIONAL LAND SURVEYOR MAKE NO STATEMENT AS TO THE ACCURACY OR COMPLETENESS OF THE FOLLOWING FLOOD ZONE DESIGNATION STATEMENT.

THE SUBJECT PROPERTY LIES WITHIN SHADED ZONE "X" WITH A DEFINITION OF: 0.2-PERCENT-ANNUAL-CHANCE FLOODPLAIN, AREAS OF 1-PERCENT-ANNUAL-CHANCE (BASE FLOOD) SHEET FLOW FLOODING WITH AVERAGE DEPTHS OF LESS THAN 1 FOOT, AREAS OF BASE FLOOD STREAM FLOODING WITH A CONTRIBUTING DRAINAGE AREA OF LESS THAN 1 SQUARE MILE, OR AREAS PROTECTED FROM THE BASE FLOOD BY LEVEES. NO BFES OR DEPTHS ARE SHOWN IN THIS ZONE, AND INSURANCE PURCHASE IS NOT REQUIRED. DESIGNATION DETERMINED BY FEMA FLOOD ZONE MAP 04013C2110L, PANEL NUMBER 2110 OF 4425, EFFECTIVE DATE OCTOBER 16, 2013.

OWNER

BANNER HEALTH
2901 N. CENTRAL AVE., SUITE 160
PHOENIX, ARIZONA 85012

SURVEYOR

HILGARTWILSON, LLC
2141 E. HIGHLAND AVE., STE. 250
PHOENIX, ARIZONA 85016
PHONE: (602) 490-0535
CONTACT: PHIL REIMER, RLS

SHEET INDEX

MLD01	COVER SHEET
MLD02	LEGAL DESCRIPTION/ AREA TABLE
MLD03-04	MINOR SUBDIVISION

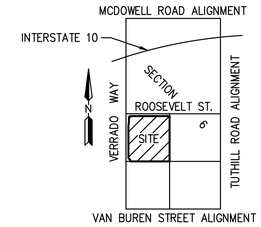

VICINITY MAP
NOT TO SCALE

NOTES

1. THE LOTS DEPICTED ON THIS PLAT ARE LOCATED WITHIN THE VICINITY OF LUKE AIR FORCE BASE AND MAY BE SUBJECT TO OVERFLIGHTS BY JET AIRCRAFT. ALL STRUCTURES WITHIN THIS PLAT SHALL BE CONSTRUCTED IN COMPLIANCE WITH THE STATUTORILY REQUIRED SOUND ATTENUATION STANDARDS (IF WITHIN THE VICINTY OF LAFB OR LUKE AUX).
2. THE PROPERTY OWNERS, OR ANY SUBSEQUENT OWNERS SHALL NOT PROCEED WITH ANY ON SITE GRADING OR EXCAVATION WITHOUT FIRST OBTAINING A PERMIT FROM THE CITY OF BUCKEYE.
3. IN ACCORDANCE WITH ARS § 9-461.07, THE CITY OF BUCKEYE HAS DETERMINED THAT ALL DEDICATIONS OCCURRING WITH THIS PLAT ARE IN CONFORMANCE WITH THE GENERAL PLAN.
4. PURSUANT TO A.R.S. § 42-11102, THE CITY OF BUCKEYE, A POLITICAL SUBDIVISION OF THE STATE OF ARIZONA, IS EXEMPT FROM ALL TAXES AND ASSESSMENTS BASED ON ASSESSED VALUE EXCEPT FOR SPECIAL DISTRICTS #14751 AND 14710, WHEN APPLICABLE.
5. THIS SITE CONSISTS OF A TOTAL OF 5 LOTS AND 0 TRACTS IN THE PLANNED AREA DEVELOPMENT (PAD) ZONING DISTRICT.
6. NO STRUCTURE OF ANY KIND SHALL BE CONSTRUCTED OR ANY VEGETATION TO BE PLANTED OR BE ALLOWED TO GROW WITHIN ANY DRAINAGE EASEMENT WHICH WOULD IMPEDE THE FLOW OF WATER OVER, UNDER, OR THROUGH EASEMENTS.
7. MINOR SUBDIVISION APPROVAL BY THE CITY IS CONDITIONAL AND SUBJECT TO FINANCIAL ASSURANCES BEING IN PLACE FOR ALL IMPROVEMENTS AS SHOWN ON THE APPROVED PLANS. THE CITY WILL NOT RECORD ANY PLATS UNTIL SUCH TIME FINANCIAL ASSURANCES ARE IN PLACE. IF AFTER ONE YEAR FROM CITY COUNCIL APPROVAL THE FINAL PLAT HAS NOT BEEN RECORDED, THEN IT SHALL BE NULL AND VOID. A VALID PRELIMINARY PLAT NEEDS TO BE IN PLACE PRIOR TO APPROVAL OF ANY FINAL PLAT ASSOCIATED WITHIN THE PROJECT IN ACCORDANCE WITH THE DEVELOPMENT CODE. THE SIGNED PLAT WILL NOT BE SUBMITTED TO THE CITY FOR SIGNATURE AND RECORDING UNTIL FINANCIAL ASSURANCES ARE IN PLACE.
8. ALL NEW OR RELOCATED UTILITIES WILL BE PLACED UNDERGROUND EXCEPT POWER LINES 69KV AND LARGER.
9. IT IS ACKNOWLEDGED THAT THIS PROPERTY WILL BE PART OF A PARKWAY MAINTENANCE IMPROVEMENT DISTRICT (MID) AND STREET LIGHTING IMPROVEMENT DISTRICT (SLID) AT THE TIME THAT IT IS DEVELOPED, IN ACCORDANCE WITH BUCKEYE ORDINANCES 43-05 AND 42-06.
10. THE INTENT OF THIS PLAT IS TO DEDICATE NEW RIGHT OF WAY AND PUBLIC EASEMENTS ON VERRADO WAY FROM FILLMORE STREET TO ROOSEVELT STREET, FILLMORE STREET FROM VERRADO WAY TO THE EAST BOUNDARY AND ROOSEVELT STREET FROM VERRADO WAY TO THE EAST BOUNDARY.
11. A BLANKET CROSS LOT ACCESS AND PARKING EASEMENT IS HEREBY GRANTED TO AND BETWEEN ALL LOTS 1 THROUGH 4 WITHIN THE SUBDIVISION FOR THE PURPOSE OF PARKING AND INGRESS AND ENGRESS OF VEHICLES. INCLUDING EMERGENCY VEHICLES, PEDESTRIANS AND BICYCLES. THE UNDERLYING PROPERTY OWNER OR ASSIGNS IS RESPONSIBLE FOR THE MAINTENANCE OF THE EASEMENT AREA.
12. OWNER AFFIRMS THAT IT HAS REVIEWED THE REQUIREMENTS OF A.R.S. §§ 9-463.01(J) AND 45-576 AND RELATED REQUIREMENTS REGARDING SUBDIVIDED LANDS AND THE ASSURED WATER SUPPLY PROGRAM, AND AFFIRMS THAT A CERTIFICATE OF ASSURED WATER SUPPLY IS NOT REQUIRED.

LAND SURVEYOR CERTIFICATION

I, PHIL REIMER, HEREBY CERTIFY THAT I AM A REGISTERED LAND SURVEYOR IN THE STATE OF ARIZONA, THAT THIS MINOR SUBDIVISION CONSISTING OF 4 SHEETS CORRECTLY REPRESENTS A BOUNDARY SURVEY MADE BY ME DURING THE MONTH OF MAY, 2024. THAT THE SURVEY IS TRUE AND CORRECT AS SHOWN; THAT ALL MONUMENTS EXIST OR WILL BE SET AND, THAT THEIR POSITIONS ARE SUFFICIENT TO ENABLE THE SURVEY TO BE RETRACED.

PHIL REIMER
RLS 48078
HILGARTWILSON, LLC
2141 E. HIGHLAND AVE., STE. 250
PHOENIX, ARIZONA 85016
P: 602.490.0535
PReimer@hilgartwilson.com

REGISTERED LAND SURVEYOR
CERTIFICATE NO.
48078
PHIL
REIMER
Date 11/26/2024
Not Signed
ARIZONA, U.S.A.
Expires 6/30/2026

NOTE:
A.R.S. 32-151 STATES THAT THE USE OF THE WORD "CERTIFY" OR "CERTIFICATION" BY A PERSON OR FIRM THAT IS REGISTERED OR CERTIFIED BY THE BOARD IS AN EXPRESSION OF PROFESSIONAL OPINION REGARDING FACTS OR FINDINGS THAT ARE SUBJECT OF THE CERTIFICATION AND DOES NOT CONSTITUTE AN EXPRESS OR IMPLIED WARRANTY OR GUARANTEE.

HILGARTWILSON
ENGINEER | PLAN | SURVEY | MANAGE
2141 E. HIGHLAND AVE., STE. 250 | P: 602.490.0535 / F: 602.368.2436
PHOENIX, AZ 85016 www.hilgartwilson.com

THE MIX
S.E.C. OF VERRADO WAY AND ROOSEVELT STREET
BUCKEYE, ARIZONA

MINOR SUBDIVISION

STATUS:
PROJ. NO.: 2517
DATE: MAY 2024
SCALE: AS SHOWN
DRAWN: BG/NG/JK
APPROVED: PR
MUNICIPAL TRACKING NO:

DWG. NO.
MLD01
SHT. 1 OF 4

© Copyright 2024, HILGARTWILSON, LLC - This document is the sole property of HILGARTWILSON, LLC.

U:\2500\2517\SURVEY\PLAT\Minor Subdivision\2517-Verrado-MLD.dwg 11/27/2024 8:06 AM

LEGAL DESCRIPTION

THE LAND REFERRED TO HEREIN BELOW IN SITUATED IN THE COUNTY OF MARICOPA, STATE OF ARIZONA, AND IS DESCRIBED AS FOLLOWS:

GOVERNMENT LOT 4, SECTION 6, TOWNSHIP 1 NORTH, RANGE 2 WEST OF THE GILA AND SALT RIVER BASE AND MERIDIAN, MARICOPA COUNTY, ARIZONA.

EXCEPTING THEREFROM:

THE WEST 65.00 FEET; AND

EXCEPT THE FOLLOWING PARCEL OF LAND, AS DESCRIBED IN DEED RECORDED AS 2008-0376608:

A PARCEL OF LAND SITUATE IN A PORTION OF G.L.O. LOT 4, SECTION 6, TOWNSHIP 1 NORTH, RANGE 2 WEST OF THE GILA AND SALT RIVER BASE AND MERIDIAN, MARICOPA COUNTY, ARIZONA, MORE PARTICULARLY DESCRIBED AS FOLLOWS:

COMMENCING AT THE SOUTHWEST CORNER OF SAID SECTION 6 MONUMENTED BY A STONE, FROM WHICH THE WEST QUARTER CORNER OF SAID SECTION 6 MONUMENTED BY A STONE, BEARS AS A BASIS OF BEARINGS, NORTH 00 DEGREES 26 MINUTES 05 SECONDS EAST, A DISTANCE OF 2,644.89 FEET;

THENCE NORTH 00 DEGREES 26 MINUTES 05 SECONDS EAST ALONG THE WESTERLY LINE OF THE SOUTH HALF OF SECTION 6, A DISTANCE OF 1,322.44 FEET TO THE TRUE **POINT OF BEGINNING**;

THENCE NORTH 00 DEGREES 26 MINUTES 05 SECONDS EAST ALONG THE WESTERLY LINE OF SAID G.L.O LOT 4 AND THE WESTERLY LINE OF THE SOUTH HALF OF SAID SECTION 6, A DISTANCE OF 1,322.44 FEET TO THE NORTHWEST CORNER OF SAID G.L.O. LOT 4 ALSO BEING THE WEST QUARTER CORNER OF SAID SECTION 6;

THENCE SOUTH 89 DEGREES 24 MINUTES 43 SECONDS EAST ALONG THE NORTHERLY LINE OF SAID G.L.O. LOT 4 AND THE NORTHERLY LINE OF THE SOUTH HALF OF SAID SECTION 6, A DISTANCE OF 1,164.34 FEET TO THE NORTHEAST CORNER OF SAID G.L.O. LOT 4;

THENCE SOUTH 00 DEGREES 21 MINUTES 47 SECONDS WEST ALONG THE EASTERLY LINE OF SAID G.L.O. LOT 4, A DISTANCE OF 55.00 FEET;

THENCE NORTH 89 DEGREES 24 MINUTES 43 SECONDS WEST ALONG A LINE PARALLEL WITH AND 55.00 FEET SOUTHERLY OF THE NORTHERLY LINE OF SAID G.L.O. LOT 4 AND THE NORTHERLY LINE OF THE SOUTH HALF OF SAID SECTION 6, A DISTANCE OF 884.19 FEET;

THENCE SOUTH 77 DEGREES 04 MINUTES 57 SECONDS WEST, A DISTANCE OF 42.82 FEET;

THENCE NORTH 89 DEGREES 24 MINUTES 43 SECONDS WEST ALONG A LINE PARALLEL WITH AND 65.00 FEET SOUTHERLY OF THE NORTHERLY LINE OF G.L.O. LOT 4 AND THE NORTHERLY LINE OF THE SOUTH HALF OF SAID SECTION 6, A DISTANCE OF 60.75 FEET;

THENCE NORTH 80 DEGREES 29 MINUTES 50 SECONDS WEST, A DISTANCE OF 59.35 FEET;

THENCE SOUTH 45 DEGREES 30 MINUTES 41 SECONDS WEST, A DISTANCE OF 55.36 FEET;

THENCE SOUTH 00 DEGREES 26 MINUTES 05 SECONDS WEST ALONG A LINE PARALLEL WITH AND 80.00 FEET EASTERLY OF THE WESTERLY LINE OF SAID G.L.O. LOT 4 AND THE WESTERLY LINE OF THE SOUTH HALF OF SAID SECTION 6, A DISTANCE OF 115.08 FEET;

THENCE SOUTH 06 DEGREES 49 MINUTES 27 SECONDS WEST, A DISTANCE OF 134.79 FEET;

THENCE SOUTH 00 DEGREES 26 MINUTES 05 SECONDS WEST ALONG A LINE PARALLEL WITH AND 65.00 FEET EASTERLY OF THE WESTERLY LINE OF G.L.O. LOT 4 AND THE WESTERLY LINE OF THE SOUTH HALF OF SAID SECTION 6, A DISTANCE OF 978.31 FEET;

THENCE NORTH 89 DEGREES 28 MINUTES 19 SECONDS WEST ALONG THE SOUTHERLY LINE OF G.L.O. LOT 4, A DISTANCE OF 65.00 FEET TO THE TRUE **POINT OF BEGINNING**; AND

ALSO, **EXCEPTING** THEREFROM THE FOLLOWING PARCEL, AS DESCRIBED IN DEED RECORDED AS 2016-0553773:

THAT PORTION OF SECTION 6, GOVERNMENT LOT 4, TOWNSHIP 1 NORTH, RANGE 2 WEST OF THE GILA AND SALT RIVER BASE AND MERIDIAN, LYING WITHIN THE CITY OF BUCKEYE, COUNTY OF MARICOPA, STATE OF ARIZONA MORE PARTICULARLY DESCRIBED AS FOLLOWS:

COMMENCING AT THE SOUTHWEST CORNER OF SAID SECTION 6, MARKED BY A BRASS CAP STAMPED "TOWN OF BUCKEYE", FROM WHICH THE WEST QUARTER CORNER OF SAID SECTION 6 BEARS NORTH 00 DEGREES 26 MINUTES 05 SECONDS WEST, 2,644.48 FEET;

THENCE, ON THE WESTERLY BOUNDARY OF SAID SECTION 6, NORTH 00 DEGREES 26 MINUTES 05 SECONDS EAST, 1,322.24 FEET, TO THE SOUTHWEST CORNER OF SAID GOVERNMENT LOT 4;

THENCE, ON THE SOUTHERLY BOUNDARY OF SAID GOVERNMENT LOT 4, SOUTH 89 DEGREES 25 MINUTES 30 SECONDS EAST, 65.00 FEET, TO THE **POINT OF BEGINNING** AND THE EASTERLY BOUNDARY OF VERRADO WAY RIGHT OF WAY;

THENCE, CONTINUING ON SAID SOUTHERLY BOUNDARY OF GOVERNMENT LOT 4, SOUTH 89 DEGREES 25 MINUTES 30 SECONDS EAST, 45.00 FEET;

THENCE, PARALLEL WITH AND OFFSET 45 FEET EAST OF SAID EASTERLY BOUNDARY OF VERRADO WAY RIGHT OF WAY, NORTH 00 DEGREES 26 MINUTES 05 SECONDS EAST, 40.00 FEET;

THENCE, PARALLEL WITH AND OFFSET 40 FEET NORTH OF SAID SOUTHERLY BOUNDARY OF GOVERNMENT LOT 4, NORTH 89 DEGREES 25 MINUTES 30 SECONDS WEST, 5.00 FEET;

THENCE, NORTH 44 DEGREES 29 MINUTES 42 SECONDS WEST, 56.64 FEET, TO SAID EASTERLY BOUNDARY OF VERRADO WAY RIGHT OF WAY;

THENCE, ON SAID EASTERLY BOUNDARY OF VERRADO WAY RIGHT OF WAY, SOUTH 00 DEGREES 26 MINUTES 05 SECONDS WEST, 80.00 FEET TO THE **POINT OF BEGINNING**.

LOT DATA

LOT TABLE		
LOT NO.	AREA (SQ.FT)	AREA (ACRES)
LOT 1	35866	0.82
LOT 2	369608	8.49
LOT 3	96462	2.21
LOT 4	53584	1.23
LOT 5	752362	17.27

TOTAL LOT AREA = 1,307,882 SQ. FT. OR 30.02 AC

RIGHT OF WAY DATA

RIGHT OF WAY TABLE		
STREET NAME	AREA (SQ.FT)	AREA (ACRES)
ROW	78624	1.80

TOTAL RIGHT OF WAY AREA = 78,624 SQ. FT. OR 1.80 AC

LOT AREA =	1,307,882 SQ. FT.	30.02 ACRES
RIGHT OF WAY AREA =	78,624 SQ. FT.	1.80 ACRES
GROSS AREA =	1,386,506 SQ. FT.	31.82 ACRES
NET AREA =	1,307,882 SQ. FT.	30.02 ACRES
	(NET = GROSS MINUS RIGHT-OF-WAY)	

REGISTERED LAND SURVEYOR
CERTIFICATE NO.
48078
PHIL
REIMER
11/26/2024
Date Signed
ARIZONA U.S.A.
Expires 6/30/2026

© Copyright 2024, HILGARTWILSON, LLC - This document is the sole property of HILGARTWILSON, LLC.

U:\2500\2517\SURVEY\PLAT\Minor Subdivision\2517-Verrado-MLD.dwg 11/26/2024 11:56 AM

HILGARTWILSON
ENGINEER | PLAN | SURVEY | MANAGE
2141 E. HIGHLAND AVE. STE. 250 | P: 602.490.0535 / F: 602.368.2436
PHOENIX, AZ 85016 www.hilgartwilson.com

THE MIX

S.E.C. OF VERRADO WAY AND ROOSEVELT STREET
BUCKEYE, ARIZONA

MINOR SUBDIVISION

STATUS:

PROJ. NO.: 2517
DATE: MAY 2024
SCALE: AS SHOWN
DRAWN: BG/NG/JK
APPROVED: PR

MUNICIPAL TRACKING NO:

DWG. NO.
MLD02
SHT. 2 OF 4

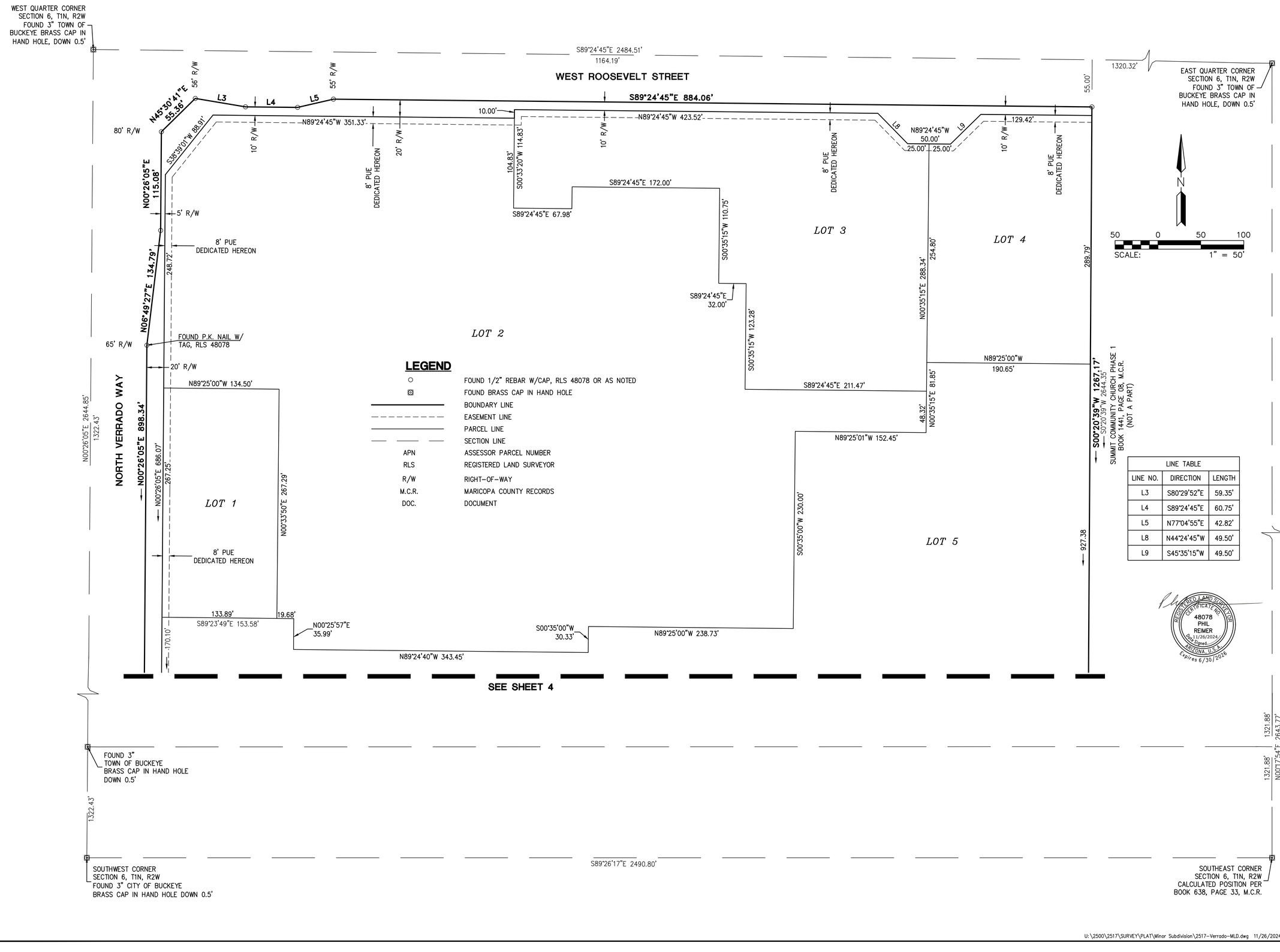

LEGEND

○	FOUND 1/2" REBAR W/CAP, RLS 48078 OR AS NOTED
⊡	FOUND BRASS CAP IN HAND HOLE
	BOUNDARY LINE
	EASEMENT LINE
	PARCEL LINE
	SECTION LINE
APN	ASSESSOR PARCEL NUMBER
RLS	REGISTERED LAND SURVEYOR
R/W	RIGHT-OF-WAY
M.C.R.	MARICOPA COUNTY RECORDS
DOC.	DOCUMENT

LINE TABLE		
LINE NO.	DIRECTION	LENGTH
L3	S80°29'52"E	59.35'
L4	S89°24'45"E	60.75'
L5	N77°04'55"E	42.82'
L8	N44°24'45"W	49.50'
L9	S45°35'15"W	49.50'

REGISTERED LAND SURVEYOR
CERTIFICATE NO.
48078
PHIL
REIMER
Date Signed 11/26/2024
ARIZONA, U.S.A.
Expires 6/30/2026

HILGARTWILSON
ENGINEER | PLAN | SURVEY | MANAGE
2141 E. HIGHLAND AVE. STE. 250 | P: 602.490.0535 / F: 602.368.2436
PHOENIX, AZ 85016 www.hilgartwilson.com

THE MIX

S.E.C. OF VERRADO WAY AND ROOSEVELT STREET
BUCKEYE, ARIZONA

MINOR SUBDIVISION

STATUS:
PROJ. NO.: 2517
DATE: MAY 2024
SCALE: AS SHOWN
DRAWN: BG/NG/JK
APPROVED: PR
MUNICIPAL TRACKING NO:

DWG. NO.
MLD03
SHT. 3 OF 4

© Copyright 2024, HILGARTWILSON, LLC - This document is the sole property of HILGARTWILSON, LLC.

U:\2500\2517\SURVEY\PLAT\Minor Subdivision\2517-Verrado-MLD.dwg 11/26/2024 11:56 AM

WEST QUARTER CORNER
SECTION 6, T1N, R2W
FOUND 3" TOWN OF BUCKEYE
BRASS CAP IN HAND HOLE
DOWN 0.5'

WEST ROOSEVELT STREET
S89°24'45"E 2484.51'

EAST QUARTER CORNER
SECTION 6, T1N, R2W
FOUND 3" TOWN OF BUCKEYE
BRASS CAP IN HAND HOLE
DOWN 0.5'

SEE SHEET 3

N
50 0 50 100
SCALE: 1" = 50'

N00°26'05"E 2644.85'
1322.43'

NORTH VERRADO WAY

N00°26'05"E 898.34'

20' R/W

170.10'

L7

8' PUE DEDICATED HEREON

S00°26'05"W 109.64'

5' R/W

L6

8' PUE DEDICATED HEREON

S00°26'05"W 182.18'

10' R/W

S44°29'43"E 56.64'

65' R/W

N44°29'43"W 56.64'

L2

L1

110.00'

FOUND 3"
TOWN OF BUCKEYE
BRASS CAP IN HAND HOLE
DOWN 0.5'

1322.43'

SOUTHWEST CORNER
SECTION 6, T1N, R2W
FOUND 3" CITY OF BUCKEYE
BRASS CAP IN HAND HOLE DOWN 0.5'

LOT 5

927.38'

S00°20'39"W 1267.17'
N00°20'39"E 2644.55'

SUMMIT COMMUNITY CHURCH PHASE 1
BOOK 1441, PAGE 08, M.C.R.
(NOT A PART)

8' PUE DEDICATED HEREON

8' PUE DEDICATED HEREON

S00°34'29"W 10.00'

S89°25'31"E 172.06'

S00°34'29"W 10.00'

8' PUE DEDICATED HEREON

50' R/W

40' R/W

S89°25'31"E 879.18'

WEST FILLMORE STREET

40' R/W

40.00'

N89°25'31"W 1056.28'
N89°25'31"W 2487.66'

1321.37'

1322.17'

1321.88'

1321.88'

N00°17'54"E 2643.77'

1168.37'

1322.43'

S89°26'17"E 2490.80'

SOUTHEAST CORNER
SECTION 6, T1N, R2W
CALCULATED POSITION
BOOK 638, PAGE 33, M.C.R

LEGEND

○	FOUND 1/2" REBAR W/CAP, RLS 48078 OR AS NOTED
⊡	FOUND BRASS CAP IN HAND HOLE
———	BOUNDARY LINE
- - - - - - - - -	EASEMENT LINE
———	PARCEL LINE
— —— —	SECTION LINE
APN	ASSESSOR PARCEL NUMBER
RLS	REGISTERED LAND SURVEYOR
R/W	RIGHT-OF-WAY
M.C.R.	MARICOPA COUNTY RECORDS
DOC.	DOCUMENT

LINE TABLE		
LINE NO.	DIRECTION	LENGTH
L1	N00°26'05"E	40.00'
L2	N89°25'09"W	5.00'
L6	S89°33'55"E	5.00'
L7	N08°14'09"E	110.51'

REGISTERED LAND SURVEYOR
CERTIFICATE NO.
48078
PHIL
REIMER
11/26/2024
Date Signed
ARIZONA, U.S.A.
Expires 6/30/2025

HILGARTWILSON
ENGINEER | PLAN | SURVEY | MANAGE
2141 E. HIGHLAND AVE. STE. 250 | P: 602.490.0535 / F: 602.368.2436
PHOENIX, AZ 85016 www.hilgartwilson.com

THE MIX

S.E.C. OF VERRADO WAY AND ROOSEVELT STREET
BUCKEYE, ARIZONA

MINOR SUBDIVISION

STATUS:
PROJ. NO.: 2517
DATE: MAY 2024
SCALE: AS SHOWN
DRAWN: BG/NG/JK
APPROVED: PR
MUNICIPAL TRACKING NO:

DWG. NO.
MLD-04
SHT. 4 OF 4

© Copyright 2024, HILGARTWILSON, LLC – This document is the sole property of HILGARTWILSON, LLC.

U:\2500\2517\SURVEY\PLAT\Minor Subdivision\2517-Verrado-MLD.dwg 11/26/2024 11:56 AM

CITY OF BUCKEYE
Regular Council Meeting
COUNCIL ACTION REPORT

MEETING DATE: 12/17/24	**AGENDA ITEM:** 4.G. DS - Appointment of Hearing Officer to Hear Appeals of Municipal Actions Pursuant to A.R.S. § 9-500.12, et seq.
DATE PREPARED: 12/17/24	**DISTRICT NO.:** n/a
STAFF LIAISON: Brian Craig, Development Services Director, bcraig@buckeyeaz.gov, (623) 692-7616	
DEPARTMENT: Development Services	**AGENDA ITEM TYPE:** Consent Agenda Items / New Business

ACTION/MOTION: (This language identifies the formal motion to be made by the Council)
Council to take action on the appointment of John Gaylord, Esq., as an Administrative Hearing Officer for the City of Buckeye to hear Appeals of Municipal Actions pursuant to A.R.S. § 9-500.12, et seq. and City Code Chapter 7, Article 8, Section 8.13.3.

SUMMARY

PROJECT DESCRIPTION:
The scope of the appointment is limited to the requirements of A.R.S. § 9-500.12, which requires the City have one or more administrative hearing officers to hear appeals by a property owner of the following actions relating to the owner's property by the City or a City Official: 1) a dedication or exaction required by the City as a condition of granting approval for the use, improvement or development of real property, not including a dedication or exaction required in a legislative act by the City Council that does not give discretion to the official to determine the nature or extent of the dedication or exaction; and 2) the adoption or amendment of a zoning regulation by the City that creates a taking of property in violation of A.R.S. § 9-500.13. City Code Chapter 7, Article 8, Section 8.13.3, requires the hearing officer be appointed by the City Council, and follow the procedural requirements of A.R.S. § 9-500.12.
Mr. Gaylord has extensive experience in municipal land use matters, and the City already has a contract for professional services in place with Mr. Gaylord.

BENEFITS:
This appointment will fulfill the City Code obligation of Chapter 7, Article 8, Section 8.13.3.

FINANCIAL IMPACT STATEMENT:
Not Applicable.

CURRENT FISCAL YEAR TOTAL COST:
The Administrative Hearing Officer will provide services on an as-needed basis only. Although it is difficult to estimate a total cost for fiscal year 2024-2025, it is not anticipated to exceed $25,000.00.

BUDGETED:
No

FISCAL YEAR:
2024-2025

FUND/DEPARTMENT:
General Fund/Development Services Department

Items related to a project or facility location must include an attached vicinity map for Council Review.
ATTACHMENTS:

CITY OF BUCKEYE
Regular Council Meeting
COUNCIL ACTION REPORT

MEETING DATE: 12/17/24	**AGENDA ITEM:** 4.H. WR – Reestablish EPCOR Water Line Interconnect project for FY25 Capital Improvement Program
DATE PREPARED: 12/17/24	**DISTRICT NO.:** 1, 3, 5 and 6
STAFF LIAISON: Terry Lowe, Water Resources Director, tlowe@buckeyeaz.gov, (623) 349-6121	
DEPARTMENT: Water Resources	**AGENDA ITEM TYPE:** Consent Agenda Items / New Business

ACTION/MOTION: (This language identifies the formal motion to be made by the Council)
Council to take action to approve descoping and reducing the budgets for two (2) Capital Improvement Projects (CIP) for Fiscal Year 25, namely $1,250,000 from CIP No.107910 Arizona Water Company Water Line Interconnect and $750,000 from CIP No. 102440 Valencia System Water Mains Upgrade; to reestablish CIP No.105910 EPCOR Water Line Interconnect, in the amount of $2,000,000; and to authorize and direct the Mayor, City Manager, City Attorney, and City Clerk to take all steps necessary to carry out the purpose and intent of the CIP No.105910 funding.

SUMMARY

PROJECT DESCRIPTION:
This request seeks funding in the FY25 Capital Budget to reestablish the project to complete the construction of the interconnect with EPCOR, a critical water infrastructure project. In FY24, the project was designed, and construction of the water line in Sienna Hills Parkway was completed. Construction of the actual interconnect portion of the project was delayed due to a delay in developing the Interconnect Agreement with EPCOR, pushing construction into FY25. The agreement with EPCOR is nearing completion, allowing for the construction to resume, which is anticipated to be completed in Spring 2025.

The Interconnect will enable the City to utilize its CAP water and other future supplies for direct delivery to its customers. To fund the project, this action will require the descoping of approved Capital Improvement Project (CIP) #107910 -- Arizona Water Company Water Line Interconnect, and CIP Project #102440 -- Valencia System Water Mains Upgrade, neither of which will be constructed in FY25. Some savings from these two Capital Improvement Projects will be used to reestablish the EPCOR Interconnect Project for the completion of the project.

BENEFITS:
The EPCOR Water Line Interconnect will provide the City the opportunity to utilize non-groundwater supplies for direct deliver to its customers reducing its reliance on groundwater.

FUTURE ACTION:
The Interconnect Agreement with EPCOR will be forthcoming.

FINANCIAL IMPACT STATEMENT:
The City will not be constructing two Capital Improvement Projects (CIP) in FY25: (i) CIP #107910 -- Arizona Water Company Water Line Interconnect; and (ii) CIP #102440 -- Valencia System Water Mains Upgrade. Funding for these two projects will be transferred to Capital Improvement Project #105910 -- EPCOR Water Line Interconnect, as follows:

GL: 40001233-543201 $1,250,000 CIP #107910
GL: 40001233-543107 $ 750,000 CIP #102440

CURRENT FISCAL YEAR TOTAL COST:
$2,000,000

BUDGETED:
No

FISCAL YEAR:
FY25

FUND/DEPARTMENT:
40001233-543157, CIP105910

Items related to a project or facility location must include an attached vicinity map for Council Review.
ATTACHMENTS:
A. Vicinity Map-EPCOR.pdf
B. Project Submission Form-EPCORInterconnect-FY25.pdf
C. FY25 Projects Omitted.pdf
WRD_Budget_Transfer_Request-EPCORInterconnect (1).pdf

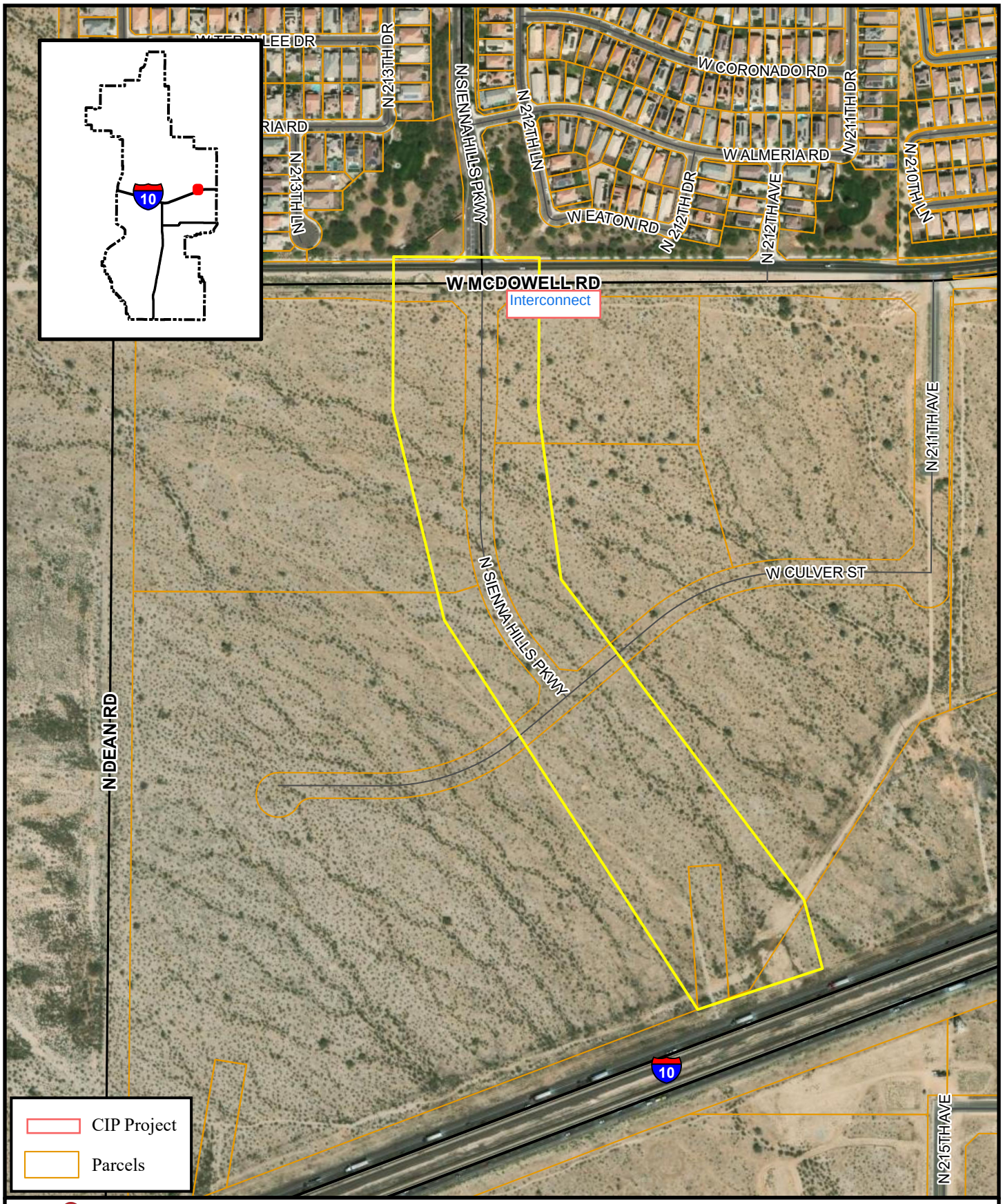

BUCKEYE, AZ

While every effort has been made to ensure the accuracy of this information, the City of Buckeye makes no warranty, expressed or implied, as to its absolute accuracy and expressly disclaims liability for the accuracy thereof.

CIP 105910 - EPCOR Waterline Interconnect at Dean and McDowell

0 125 250 500 Feet

N

Date: 3/8/2023
Document Name: CIP Vicinity Maps

PROJECT SUBMISSION FORM

945 N 215th Ave #137

Buckeye, AZ 85326

GENERAL PROJECT INFORMATION

Project Name	Submitting Department	Submitting Director
EPCOR Water Line Interconnect at Dean & McDowell	Water Resources	Terry Lowe

Project Requirement: *Defined objectives, problem it is solving, and parameters to operate within*

The project will include installation of a 12" water line, meter, and pressure relief valve connected to the EPCOR water distribution system on McDowell Rd, east of Sienna Hills Parkway. The design is complete and the construction is anticipated to be completed in Spring 2025.

A water line interconnect to the EPCOR water system provides the city the opportunity to utilize surface water in the event the city experiences a drop in flow or pressure at the North Airport Rd Water Campus. Also, it provides the city an additional source of water to move from Zone 3 to Zone 2 and ultimately into the Jackie Meck Water Campus reservoir.

Project Costs: *Any known project costs, pricing assumptions, previous bids, or pricing documentation*

$2,000,000

Draft Scoring: *Initial ranking of factors as a starting point for CIP consideration. Draft Score is a total of the number of strategic objectives directly as approved by the submitting department's DCM.*

Strategic Objectives	Y/N (Check box for yes)
Underway and Cannot Stop	
Increasing Public Safety	Y
Community Impact	Y
Council Driven Priority	Y
Regulatory/Requirements	Y
Agreement/Commitments	Y
Economic Development Corridor	Y
Total (0-7)	6

Submitting Director's Signature:	Submitting Deputy City Manager's Signature:

Capital Improvement Program

FY 25 - FY 29 Capital Projects Fund

PROJECT NO. :	107910	**PROJECT NAME :**	Arizona Water Co. Water Line Interconnect
DEPARTMENT :	210-WATER RESOURCES	**DEPARTMENT PRIORITY :**	High
PROJECT TYPE :	Water Resources	**FISCAL YEAR :**	2024
DISTRICT :	6	**REVENUE SOURCE :**	4000 - Water Enterprise Fund

DESCRIPTION AND SCOPE

Design and installation of a water line, meter, and PRV connected to the Arizona Water Co. water distribution system, near the Verrado Wy. alignment, south of I-10, near the western boundary of the Arizona Water Company CC&N service area.

PURPOSE AND NEED

A water line interconnect with Arizona Water Company's system gives the City of Buckeye the opportunity to add an additional water source in the event the city experiences a drop in flow and/or pressure. It also gives the city an opportunity to purchase additional water from AZ Water, should the City and AZ Water come to an agreement.

OTHER INFORMATION

LOCATION

Vicinity of Verrado Way between I-10 and Yuma Rd.

CAPITAL EXPENDITURES

	FY 25	FY 26	FY 27	FY 28	FY 29
PLANNING & DESIGN	$ 0	$ 0	$ 0	$ 0	$ 0
LAND	$ 0	$ 0	$ 0	$ 0	$ 0
SITE IMPROVEMENTS	$ 0	$ 0	$ 0	$ 0	$ 0
CONSTRUCTION	$ 3,000,000	$ 0	$ 0	$ 0	$ 0
DIRECT EQUIPMENT	$ 0	$ 0	$ 0	$ 0	$ 0
VEHICLE REPLACEMENT	$ 0	$ 0	$ 0	$ 0	$ 0
OTHER PROJECT COSTS	$ 0	$ 0	$ 0	$ 0	$ 0
FURNITURE AND FIXTURES	$ 0	$ 0	$ 0	$ 0	$ 0
TOTAL REQUEST	$ 3,000,000	$ 0	$ 0	$ 0	$ 0

MAP



Capital Improvement Program
FY 25 - FY 29 Capital Projects Fund

PROJECT NO. :	102440	**PROJECT NAME :**	Valencia System Water Mains Upgrade
DEPARTMENT :	210-WATER RESOURCES	**DEPARTMENT PRIORITY :**	Normal
PROJECT TYPE :	Water Resources	**FISCAL YEAR :**	2024
DISTRICT :	1	**REVENUE SOURCE :**	4000 - Water Enterprise Fund

DESCRIPTION AND SCOPE

To replace the water main system.

PURPOSE AND NEED

The system was constructed in the 50's and requires replacement to meet water system standards. The pipe sizing is insufficient for fire flow protection and requires a pressure reducing valve (PRV) to prevent over pressurization of the mains.

OTHER INFORMATION

LOCATION

Valencia Area - (E-W) Apache to Miller; (N/S) Maricopa to Baseline

CAPITAL EXPENDITURES

	FY 25	FY 26	FY 27	FY 28	FY 29
PLANNING & DESIGN	$ 0	$ 0	$ 0	$ 0	$ 0
LAND	$ 0	$ 0	$ 0	$ 0	$ 0
SITE IMPROVEMENTS	$ 0	$ 0	$ 0	$ 0	$ 0
CONSTRUCTION	$ 3,000,000	$ 3,000,000	$ 3,000,000	$ 3,000,000	$ 0
DIRECT EQUIPMENT	$ 0	$ 0	$ 0	$ 0	$ 0
VEHICLE REPLACEMENT	$ 0	$ 0	$ 0	$ 0	$ 0
OTHER PROJECT COSTS	$ 0	$ 0	$ 0	$ 0	$ 0
FURNITURE AND FIXTURES	$ 0	$ 0	$ 0	$ 0	$ 0
TOTAL REQUEST	$ 3,000,000	$ 3,000,000	$ 3,000,000	$ 3,000,000	$ 0

MAP



Budget Transfer Request

Requested By: Jason Harris

Is this the first increase to the GL? ☑ YES ☐ NO

Was the product/service budgeted for the current fiscal year? ☐ YES ☑ NO

Description of services/commodities to be purchased. (must attach quotes)

CIP #105910 EPCOR Water Line Interconnect installation on McDowell Rd, east of Sienna Hills Pkwy.

When will services/commodities be received?

In early CY 2025

Why does the GL need to **increase** and how will it affect current budget and operations?

The project was originally scheduled to be completed in FY24 and was delayed due to not being able to execute agreement with EPCOR.

What product/services will not be purchased this fiscal year to absorb the **decrease** in the GL?

CIP #107910 Arizona Water Co. Water Line Interconnect will not be constructed this fiscal year, FY25, nor is it anticipated to be in the next five years. CIP #102440 Valencia System Water Main Upgrades has been postponed pending grant funding availability.

How will the decrease in the GL affect operations?

N/A

Decrease GL			Increase GL		
GL: Org/Object	Available Amount	Transfer Amount	GL: Org/Object	Available Amount	Transfer Amount
40001233-543201	1,500,000	1,250,000	40001233-543157	0	1250000
40001233-543107	3,000,000	750,000	40001233-543157	0	750000
	TOTAL:	$ 2,000,000		TOTAL:	$ 2,000,000

Signature:

Send to: WaterResourcesAP@Buckeyeaz.gov

CITY OF BUCKEYE
Regular Council Meeting
COUNCIL ACTION REPORT

MEETING DATE: 12/17/24	**AGENDA ITEM:** 4.I. WR - Mountain States Pipe & Supply Co. Change Order #1
DATE PREPARED: 12/17/24	**DISTRICT NO.:**
STAFF LIAISON: Terry Lowe, Water Resources Director, tlowe@buckeyeaz.gov, (623) 349-6102	
DEPARTMENT: Water Resources	**AGENDA ITEM TYPE:** Consent Agenda Items / New Business

ACTION/MOTION: (This language identifies the formal motion to be made by the Council)
Council to take action on Change Order No. 1 (Contract No. 2025036) between the City of Buckeye and Mountain States Pipe & Supply Co.; and authorize the City Manager to execute said contract.

SUMMARY

PROJECT DESCRIPTION:
Water Resources is requesting approval of Change Order #1 to the Mountain States Pipe & Supply Co. Contract No. 2025036. Change Order #1 will increase the contract's NTE from $224,000 to $400,000. This increase is necessary to; (1) meet the 5% price increase to Advanced Metering Infrastructure (AMI) parts and equipment; (2) replace aged and damaged AMI parts and equipment, specifically the remote transmitters known as Encoder Receiver Transmitters (ERTs); and (3) purchase new ERTs and other AMI parts needed to keep pace with the city's growth.

BENEFITS:
Ensuring accurate and timely water meter readings throughout the City of Buckeye.

FUTURE ACTION:
None.

FINANCIAL IMPACT STATEMENT:
This increase of $176,000 is part of the department's approved budget.

CURRENT FISCAL YEAR TOTAL COST:
$400,000

BUDGETED:
Yes

FISCAL YEAR:
FY25

FUND/DEPARTMENT:
40003351-520575

Items related to a project or facility location must include an attached vicinity map for Council Review.
ATTACHMENTS:
Contract No. 2025036.pdf

CONTRACT FOR MATERIALS AND SERVICES
BETWEEN
THE CITY OF BUCKEYE
AND
MOUNTAIN STATES PIPE & SUPPLY CO
Contract No. 2025036

CHANGE ORDER # 1

THIS CHANGE ORDER # 1 (this "Change Order") is entered into as of _____ between the City of Buckeye, an Arizona municipal corporation (the "City") and Mountain States Pipe & Supply CO., a Colorado corporation (the "Contractor"). This Change Order modifies certain sections of Contract No. 2025036 (the "Contract"), with those sections not expressly modified remaining in full effect pursuant to their terms.

CONTRACT CHANGES:

1. Compensation: Paragraph 3, "Compensation", is amended by increasing the not-to-exceed amount from $224,000.00 to $400,000.00.

2. Scope of Work: Paragraph 4, "Scope of Work", is amended by including the scope of work set forth in **Exhibit 1**, attached hereto and incorporated herewith.

3. New Section: Term is amended by adding the Contract end date to June 30, 2025 unless such term is modified or extended pursuant to section 8 Renewal.

RECITAL OF
CONTRACT TERM (END-DATE)
AND
CONTRACT PRICE:

The original Contract term end-date was not previously specified.

The amended Contract term end-date after this Change Order is and shall be June 30, 2025.

The Contract term end date is not governed by a cooperative purchase contract end-date

The original Contract Price was not-to-exceed (NTE) $224,000.00.
The amended Contract Price after this Change Order is and shall be NTE $400,000.00.

For reference purposes, **Attachment "1"** attached hereto includes selected pages/portions of the Contract.

ADDITIONAL PROVISIONS:

Except as amended herein, all provisions of the Contract remain in full force and effect. In the event of any conflict or discrepancy between the terms of this Change Order, the Contract, **Exhibit** "**1**" to this Change Order, and any other contract documents, the documents shall govern in that order.

This Change Order may be canceled pursuant to the provisions of A.R.S. § 38-511.

To the extent applicable under A.R.S. § 35-394, Contractor certifies that it does not, and will not for the duration of the Contract, use the forced labor, any goods or services produced by the forced labor, or any contractors, subcontractors, or suppliers that use the forced labor or any goods or services produced by the forced labor of ethnic Uyghurs in the People's Republic of China.

IN WITNESS WHEREOF, the parties hereto have executed this Change Order as of the date first set forth above.

CITY:

THE CITY OF BUCKEYE,
an Arizona municipal corporation

_____
Dan Cotterman, City Manager

CONTRACTOR

MOUNTAIN STATES PIPE & SUPPLY CO.,
a Colorado Corporation

By: Paul Carroll

Title: CEO

ATTEST:

_____
Lucinda Aja, City Clerk

RECOMMENDED:

William Kauppi

_____
William Kauppi, Chief Financial Officer

APPROVED AS TO FORM:

_____
K. Scott McCoy, City Attorney

Attachment "1"

Selected Pages/Portions of Contract

CONTRACT FOR MATERIALS AND SERVICES
FOR THE CITY OF BUCKEYE
AND
MOUNTAIN STATES PIPE & SUPPLY CO
Contract No. 2025036

This Contract is entered into this 19 day of July, 2024 by and between the City of Buckeye, an Arizona municipal corporation ("City"), and Mountain States Pipe & Supply CO., a Colorado corporation ("Contractor").

WHEREAS, the City desires to receive, and Contractor is able to provide services;

NOW THEREFORE, in consideration for the mutual promises contained herein, the parties agree as follows:

1. Standard Terms and Conditions: The City of Buckeye Standard Terms and Conditions, attached hereto as *Exhibit A* are hereby incorporated in this Contract by reference and shall apply to performance of this Contract.

2. Insurance: Contractor shall meet Insurance Requirements of the City as set forth in *Exhibit B* attached hereto and incorporated herein by reference.

3. Compensation: Payment to the Contractor for the materials and/or services provided not to exceed $224,000.00 including other fees and taxes.

4. Scope of Work: Contractor shall provide the services generally described as follows: Advance metering infrastructure (AMI) parts, equipment, and technical services for water meters. The scope of work and prices will be provided at a future date throughout the Fiscal Year.

5. Contract Term: The Contract shall be effective as of the date signed by both parties.

6. Partial Award: The City reserves the right to make multiple awards or to award by (i) bid schedule, (ii) individual line item, (iii) by group of line items, or (iv) as a total, whichever is deemed in the best interest to the City.

7. Quantities; Non-Exclusive: Unless the solicitation states otherwise, the Contract

will be non-exclusive, and the City makes no guarantees as to the amount of products or services to be utilized from a Bidder. The City reserves the right to add or remove products or services during the term of the Contract.

8. Renewal: This Contract may be renewed or extended for up to two (2) additional one (1) one-year terms by mutual written consent of the parties. The City Manager, or his designee (the City's Chief Financial Officer) if applicable, shall have authority to approve renewal on behalf of the City.

9. Notice: Any formal notice required under this Contract shall be in writing and sent by certified mail and email as follows:

City: City Manager City of Buckeye 530 E Monroe Ave Buckeye AZ 85326	Contractor: Mountain States Pipe & Supply Co. 7765 Electronic Dr Colorado Springs, CO, 80922
With a copy to: City Attorney City of Buckeye 530 E Monroe Ave Buckeye AZ 85326	With a copy to: Mountain States Pipe & Supply Co. 7765 Electronic Dr Colorado Springs, CO, 80922

10. Authority: Each party warrants that it has authority to enter into this Contract and perform its obligations hereunder, and that it has taken all actions necessary to enter into this Contract.

11. Contract Controls. In the event of any inconsistency between this Contract and the Exhibits hereto, the documents shall govern in the following order: (1) This Contract for Materials and Services; (2) Exhibit A (standard terms); and (3) Exhibit B (insurance).

12. Time is of Material Importance. Time is of material importance to each and every provision of this Contract.

[*signatures on following page*]

CITY	CONTRACTOR
THE CITY OF BUCKEYE, an Arizona municipal corporation	MOUNTAIN STATES PIPE & SUPPLY CO., a Colorado corporation
Dan Cotterman, City Manager	[signature] CEO [title]

Adobe Acrobat Sign Transaction Number: CBJCHBCAABAAXnjSKBy71ITP0W8m5ZlwZknSsaOkP43L

Exhibit 1
Scope of Work

Proposal

Mountain States Pipe and Supply Company
7765 Electronic Drive
Colorado Springs, Colorado 80922
1-800-777-7173
Paul Mobile Phone: 719.351.4120
Paul email: pcarroll@msps.com

Customer:	James Reynolds Meter Service Supervisor City of Buckeye–Water Resources O: 623-349-6120 C: 602-509-8637

Date: Monday, September 23, 2024

Qty	Description	Cost Each	Extension
700	Itron ERW-1300-402 2-Port Water ERT Module	$95.10	$66,570.00
1200	Itron CFG-0900-003 Itron Remote Antenna	$75.20	$90,240.00
	Sub-Total		$156,810.00
	Tax Rate 9.3%		$14,583.33
	Freight		$1,200.00
			$172,593.33

Freight: Billed at Actual Cost
Taxes not Included

CITY OF BUCKEYE
Regular Council Meeting
COUNCIL ACTION REPORT

MEETING DATE: 12/17/24	**AGENDA ITEM:** 4.J. WR - Fortiline, Inc CCPA Change Order #1
DATE PREPARED: 12/17/24	**DISTRICT NO.:**
STAFF LIAISON: Terry Lowe, Water Resources Director, tlowe@buckeyeaz.gov, (623) 349-6102	
DEPARTMENT: Water Resources	**AGENDA ITEM TYPE:** Consent Agenda Items / New Business

ACTION/MOTION: (This language identifies the formal motion to be made by the Council)
Council to take action on Change Order #1 to the Cooperative Contract Purchase Addendum (CCPA), No. 2023061 between the City of Buckeye and Fortiline, Inc; and authorize the City Manager to execute and deliver said contract.

SUMMARY

PROJECT DESCRIPTION:

The city holds a Cooperative Contract Purchase Addendum (CCPA) with Fortiline, Inc., which allows the city to purchase products from the company through their direct purchasing contract with the City of Phoenix. Critical items purchased under this contract include pipes, brass parts, repair clamps, hydrant valves, gaskets, and repair kits for hydrants.

The term of the CCPA goes through FY26, but the original NTE of $125,000 was only programmed to cover the Water Resource Department's purchasing needs in FY24. Change Order #1 seeks to increase the not to exceed (NTE) amount of the CCPA to $325,000. This increase will meet the Department's purchasing needs with this vendor for both FY25 and FY26: $162,500 for FY25 and $162,500 for FY26.

BENEFITS:
Ensuring streamlined operations through efficient purchasing and inventory practices.

FUTURE ACTION:
N/A

FINANCIAL IMPACT STATEMENT:

FY25 Spending with the Vendor: $162,500

FY26 Spending with the Vendor: $162,500

CURRENT FISCAL YEAR TOTAL COST:

Total not to exceed $162,5000.

BUDGETED:
Yes

FISCAL YEAR:
FY25

FUND/DEPARTMENT:
40003350-520574 $30,000; 40003350-521514 $40,000; 40003351-520575 $45,500; 40013226-520543 $15,000; 40013229-520543 $32,000

Items related to a project or facility location must include an attached vicinity map for Council Review.
ATTACHMENTS:
Contract No. 2023061.pdf

COOPERATIVE CONTRACT PURCHASE ADDENDUM (CCPA)
BETWEEN
THE CITY OF BUCKEYE
AND
FORTILINE, INC., DBA FORTILINE WATERWORKS
Contract No. 2023061

CHANGE ORDER # 1

THIS CHANGE ORDER # 1 (this "Change Order") is entered into as of _____ between the City of Buckeye, an Arizona municipal corporation (the "City") and Fortiline, INC., DBA Fortiline Waterworks a South Carolina corporation (the "Contractor"). This Change Order modifies certain sections of Contract No. 2023061 (the "Contract"), with those sections not expressly modified remaining in full effect pursuant to their terms.

CONTRACT CHANGES:

1. Contract Price, is amended by increasing the not-to-exceed amount from $125,000.00 to $325,000.00.

2. **New Section** Clickwrap Terms Excluded. In the event the Contract's terms of sale or service were provided to the City only upon "acceptance" of a "clickwrap" or "clickthrough" agreement, such terms of sale or service shall not be binding upon the City. No oral agreement, "clickwrap" or "clickthrough" agreement or other understanding shall in any way modify a City issued or approved contract or this Contract.

RECITAL OF
CONTRACT TERM (END-DATE)
AND
CONTRACT PRICE:

The original Contract term end-date was April 30, 2026.

The amended Contract term end-date at the time of this Change Order was April 30, 2026.

The amended Contract term end-date after this Change Order is and shall be April 30, 2026.

The Contract term end date is not governed by a cooperative purchase contract end-date

The original Contract Price was not-to-exceed (NTE) $125,000.00.

The amended Contract Price at the time of this Change Order was NTE $125,000.00.

The amended Contract Price after this Change Order is and shall be NTE $325,000.00.

For reference purposes, **Attachment "1"** attached hereto includes selected pages/portions of the Contract.

ADDITIONAL PROVISIONS:

Except as amended herein, all provisions of the Contract remain in full force and effect.

In the event of any conflict or discrepancy between the terms of this Change Order, the Contract, and any other contract documents, the documents shall govern in that order.

This Change Order may be canceled pursuant to the provisions of A.R.S. § 38-511.

To the extent applicable under A.R.S. § 35-394, Fortiline, INC., DBA Fortiline Waterworks certifies that it does not, and will not for the duration of the Contract, use the forced labor, any goods or services produced by the forced labor, or any contractors, subcontractors, or suppliers that use the forced labor or any goods or services produced by the forced labor of ethnic Uyghurs in the People's Republic of China.

IN WITNESS WHEREOF, the parties hereto have executed this Change Order as of the date first set forth above.

CITY:

THE CITY OF BUCKEYE,
an Arizona municipal corporation

_____
Dan Cotterman, City Manager

CONTRACTOR:

FORTILINE, INC., DBA FORTILINE WATERWORKS
a South Carolina corporation

By: David Root

Its: General Manager

ATTEST:

_____
Lucinda Aja, City Clerk

RECOMMENDED:

William Kauppi

_____
William Kauppi, Chief Financial Officer

(REV. 05.15.2024) (smf)

APPROVED AS TO FORM:

_____

K. Scott McCoy, City Attorney

Attachment "1"

Selected Pages/Portions of Contract

COOPERATIVE CONTRACT PURCHASE ADDENDUM (CCPA)
BETWEEN THE CITY OF BUCKEYE
AND
FORTILINE, INC., dba Fortiline Waterworks

Water Pipe and Miscellaneous Fittings
CONTRACT NO. 2023061

THIS COOPERATIVE CONTRACT PURCHASE ADDENDUM (this "Addendum") is entered into as of August 4, 2023 between the City of Buckeye, an Arizona municipal corporation (the "City"), and Fortiline, Inc., dba Fortiline Waterworks (the "Contractor").

WHEREAS, after a competitive procurement process, which is documented in the Award attached hereto as part of Exhibit A, "the City of Phoenix" and Contractor entered into Contract No. 154213, dated May 5, 2021 (such contract and subsequent amendments thereto herein referred to as the "City of Phoenix Contract"), which is attached hereto as Exhibit A and incorporated herein by reference); and

WHEREAS, the City is permitted by Section 24-3-16 of the City Procurement Code to make purchases via cooperative purchasing pursuant to a cooperative purchasing contract; and

WHEREAS, the Contractor has made a proposal to the City, which is attached hereto as Exhibit B and incorporated herein by reference (the "Proposal"); and

WHEREAS, the City desires to accept the Proposal and enter into contract with the Contractor under the terms and conditions of the City of Phoenix Contract, by issuing this Addendum to said contract.

THEREFORE, the City now enters into this Addendum with the Contractor for the goods and services set forth in the Proposal. This Addendum incorporates the terms and conditions of the City of Phoenix Contract, save that references therein to City of Phoenix shall be read to refer to the City of Buckeye. This Addendum shall be effective as of the date set forth below for approval and remain in effect for the remainder of the Contract's term unless such term is modified or extended pursuant to the terms of the City of Phoenix Contract. Payments to the Contractor shall be calculated in accordance with the Proposal, which is attached hereto as part of Exhibit A, in a total amount not to exceed $125,000.00.

FURTHER, this Addendum is subject to cancellation pursuant to ARS §38-511.

FURTHER, to the extent applicable, the Contractor and its subcontractors warrant compliance with all federal immigration laws and regulations that relate to their employees and their compliance with the E-verify requirements under A.R.S. § 23-214(A). The Contractor's or its subcontractors' failure to comply with such warranty shall be deemed a material breach of this Addendum and may result in the termination of this Addendum by the City. The City retains the right to inspect the papers of the Contractor's or its subcontractors' employees who perform any work or services pursuant to this Addendum to ensure compliance with these warranties.

FURTHER, to the extent applicable, the Contractor warrants that it is not participating and will not participate in prohibited activity in contravention of A.R.S. § 35-393.01.

FURTHER, to the extent applicable under ARIZ. REV. STAT. § 35-394, Contractor certifies that it does not currently, and agrees for the duration of this Agreement that it will not use (i) the forced labor of ethnic Uyghurs in the Peoples Republic of China ("ethnic Uyghurs"), (ii) any goods or services produced by the forced labor of ethnic Uyghurs, or (iii) any Contractors, subcontractors, or suppliers that use the forced labor or any goods or services produced by the forced labor of ethnic Uyghurs. If Contractor becomes aware that it is not in compliance with this paragraph, Contractor shall notify the City of the noncompliance within five (5) business days of becoming aware of it. If Contractor fails to provide a written certification that Contractor has remedied the noncompliance within one hundred eighty (180) days after that, this Agreement shall terminate unless the termination date of this Agreement occurs before the end of the remedy period, in which case this Agreement terminates on the Agreement termination date.

FURTHER, the Parties agree that the Addendum and Exhibits thereto shall be governed by State of Arizona law and suits pertaining to the Addendum and Exhibits thereto may only be brought in courts located in Maricopa County, Arizona.

FURTHER, all modifications, including but not limited to service additions and deletions, will be made in writing and with the written agreement of both parties.

FURTHER, in the event of any inconsistency between this Addendum, the City of Phoenix Contract, and Exhibit A, the documents shall govern in that order.

THEREFORE, the Parties have executed this Addendum as of the date first set forth above.

CITY

THE CITY OF BUCKEYE,
an Arizona Municipal corporation

Dan Cotterman, City Manager

CONTRACTOR

Fortiline, Inc., dba Fortiline Waterworks

By: David Root

Its: General Manager, Arizona

Adobe Acrobat Sign Transaction Number: CBJCHBCAABAAdhMSxIIbgZhH2wPvjs4yJQWPGQm-cBYI

GROUP 4 - CORPORATION STOPS

Item #	Product ID	Product Description	Bidder's Part Number	Manufacturer's Name	Manufacture's Part Number	Estimated QTY	UoM	Unit Cost	Extended Cost
1	67064854127	STOP CORPORATION 1" INLET CORPORATION STOP THREAD X 1" COPPER COMPRESSION OUTLET	394461	JAMES JONES	P25008 330NJ	1239	EA	$46.98	$58,208.22
2	67064905259	STOP CORPORATION 3/4" INLET C.S.T. OUTLET COPPER COMPRESSION	396814	JAMES JONES	P25008 250NJ	2288	EA	$35.70	$81,681.60
3	67064803058	STOP CORPORATION 1" M.I.P. THREAD X 1" M.I.P. THREAD	391227	JAMES JONES	020013 330NJ	155	EA	$46.72	$7,241.60
4	67064803009	STOP CORPORATION 3/4" M.I.P.THREAD X 3/4" M.I.P THREAD	396818	JAMES JONES	020013 250NJ	74	EA	$34.20	$2,530.80
5	67064752107	STOP CORPORATION 2" INLET MALE I.P. THREAD OUTLET 2" COPPER TUBING COMPRESSION TUBING SIZE	396807	JAMES JONES	P25028 500NJ	746	EA	$106.25	$79,262.50
6	67064752008	STOP CORPORATION 2" INLET MALE I.P. THREAD OUTLET 2" COPPER TUBING COMPRESSION TUBING SIZE	396808	JAMES JONES	P25028 550NJ	460	EA	$175.71	$80,826.60

Manufacturer's Discounts, Warranty and Lead Time

Item #	Manufacturer Name	Manufacturer's Catalog Date of Issue	Manufacturer's Published Price List Date of Issue	Percentage Discount from Manufacturer's Published Price List	Warranty	Lead Time [in calendar days]
1	Ford Meter Box			0%		
2	Meuller Company			5%		
3	AY McDonald			0%		

	CONTRACT AMENDMENT	CITY OF PHOENIX Purchasing Division 200 W. Washington St., 9th Floor Phoenix, Arizona 85003 Phone: (602) 534-7640

Effective Date	8/25/2023
Solicitation No	IFB 2122-WDD-436(SD)
SRM/SAP Contract No.	4701007994
City Clerk Contract No	154213
Ordinance # and Date	S-47514, 5/5/2021
Amendment No	2
Contract Title	Water Pipe and Miscellaneous Fittings
Contractor	Fortiline, Inc.
Contractor E-mail	daniel.roer@fortiline.com
Buyer Name	Sashaa Contreras
Telephone No	(602) 534-7640
Buyer Email	sashaa contreras@phoenix.gov

THE ABOVE REFERENCED CONTRACT IS AMENDED AS FOLLOWS:

Pursuant to § II (Standard Terms and Conditions), ¶ 5.1 (Contract Amendments), the changes below are made to the contract as of the Effective Date above.

1. In accordance with Section III, (Special Terms and and Conditions), ¶ 2, (Price), the parties agree that the new price for the following contract items in Attachment C – Bid Price Schedule (attached spreadsheet), is as follows.

Item #	Product ID	Product Description	Bidder's Part Number	Manufacturer's Name	Manufacturer's Part Number	U of M	Current Price	New Price
1	67064854127	STOP CORPORATION 1" INLET CORPORATION STOP THREAD X 1" COPPER COMPRESSION OUTLET	394461	James Jones	P25008 330NJ	EA	$56 50	$65 26
2	67064905259	STOP CORPORATION 3/4" INLET C S T OUTLET COPPER COMPRESSION	396814	James Jones	P25008 250NJ	EA	$42 94	$49 60
3	67064803058	STOP CORPORATION 1" M I P THREAD X 1" M.I.P THREAD	391227	James Jones	020013 330NJ	EA	$56 06	$64 75
4	67064803009	STOP CORPORATION 3/4" M I P THREAD X 3/4" M I P THREAD	396818	James Jones	020013 250NJ	EA	$41 04	$47 40
5	67064752107	STOP CORPORATION 2" INLET MALE I P THREAD OUTLET 2" COPPER TUBING COMPRESSION TUBING SIZE	396807	James Jones	P25028 550NJ	EA	$210 85	$243 53

	CONTRACT AMENDMENT	CITY OF PHOENIX Purchasing Division 200 W. Washington St., 9th Floor Phoenix, Arizona 85003 Phone: (602) 534-7640

6	67064752008	STOP CORPORATION 1 1/2" INLET MALE I P THREAD OUTLET 1 1/2" COPPER TUBING COMPRESSION TUBING SIZE	396808	James Jones	P25028 500NJ	EA	$127 50	$147 26

2 Except as otherwise amended, all other terms and conditions of the Agreement and any prior amendments not in conflict will remain in full force and effect. If there is a conflict or ambiguity among amendments and the Agreement, the most recent amendment will only prevail and control if clear and unambiguous, and if not, the original Agreement will govern to the extent necessary to support the intent of the Agreement

ALL OTHER CONTRACT PRICES, TERMS, AND CONDITIONS WILL REMAIN THE SAME

Fortiline, Inc.

Contractor acknowledges receipt of an agreement with the amendment. A signed copy must be returned to the **Water Services Department, Internal Business Support.**

Daniel Roer | Aug 8, 2023 00:02 MST

Signature

Daniel Roer

Printed Name

General Manager, Arizona

Title

Date Aug 8, 2023

City of Phoenix, a municipal corporation
Jeffrey Barton, City Manager

By._____
Director Name. **Troy Hayes**
Director Title· **Water Services Director**

ATTEST:

_____
Denise Archibald
City Clerk

APPROVED AS TO FORM:
Julie M. Kriegh, City Attorney

By· _____
RoseMarie R. Horvath
Assistant Chief Counsel

Rev 12/2018

CITY OF BUCKEYE
Regular Council Meeting
COUNCIL ACTION REPORT

MEETING DATE: 12/17/24	**AGENDA ITEM:** 4.K. WR - Agreement for Water Service for the Algodon Development
DATE PREPARED: 12/17/24	**DISTRICT NO.:** 1
STAFF LIAISON: Terry Lowe, Director, Water Resources Director, tlowe@buckeyeaz.gov, (623) 349-6102	
DEPARTMENT: Water Resources	**AGENDA ITEM TYPE:** Consent Agenda Items / New Business

ACTION/MOTION: (This language identifies the formal motion to be made by the Council)
Council to take action on the Agreement for Water Service for the Algodon Development between the City of Buckeye, Ashton Woods Arizona, L.L.C., Starlight Homes Arizona L.L.C., and CW - Algodon, LLC.

SUMMARY

PROJECT DESCRIPTION:
Prior owners of the real property legally described in the Agreement entered into various water agreements with Valencia Water Company, Inc. and Global Water Resources, Inc., ("Prior Water Service Agreements") which required the timely payment of amounts for the construction of water infrastructure. Due to uncertainty about the amounts due under the Prior Water Service Agreements, Owners and the City do not agree on the amounts to be paid by the Owners in order to obtain City water services. Owners have agreed to pay City water impact and water service fees to receive water services from the City. The Agreement also terminates the Prior Water Service Agreements as to the real property and the Parties, to the extent Owners and City are lawfully able to do so, and contains a release of claims under or relating to the Prior Water Service Agreements.
City staff is recommending Council approve the Agreement for multiple reasons, including 1) the dearth of supporting documentation necessary to unequivocally establish the amounts owed under the Prior Water Service Agreements; 2) the potential protracted nature of continued discussions; and, 3) the benefit to the City of the certainty of the amounts to be paid by the development in exchange for City water services.

BENEFITS:
The Agreement provides certainty of the amounts to be paid by the development in exchange for City water services.

FUTURE ACTION:
None.

FINANCIAL IMPACT STATEMENT:
Receipt of water impact and water service fees in effect at the time permits are pulled for lots within the development.

Items related to a project or facility location must include an attached vicinity map for Council Review.
ATTACHMENTS:
2024-12-03 AW & CW Exec Water Agmt AZALG 646.pdf

WATER SERVICE AND SETTLEMENT AGREEMENT

Effective Date: ("**Agreement**")	The effective date of this Water Service and Settlement Agreement is December 17, 2024.
Parties:	City of Buckeye, a municipal corporation (the "**City**")
	Ashton Woods Arizona, L.L.C., a Nevada limited liability company ("**Ashton**"); Starlight Homes Arizona L.L.C., a Delaware limited liability company ("**Starlight**"); and CW - Algodon, LLC a Delaware limited liability company ("**CW**") (collectively "**Owners**")
Property:	Cotton Meadows North, also known as Algodon and Agave Trails, which is more particularly described on Exhibit A hereto ("Property").

RECITALS

A) Prior owners of the Property entered into various water agreements with Valencia Water Company, Inc. ("**Valencia**") and Global Water Resources ("**Global**") which required the timely payment of amounts for the construction of water infrastructure. All such agreements, amendments, and side letters related thereto with Valencia or Global regarding the Property are referred to herein as the "**Prior Water Service Agreements**".

B) The City acquired Valencia from Global subject to certain historic water agreements set forth in the Settlement Agreement for Stipulated Condemnation dated March 19, 2015.

C) Owners purchased the Property and received assignments of certain rights under the Prior Water Service Agreements. The nature and extent of the assignments of rights under the Prior Water Service Agreements are disputed by the City.

D) Owners and the City disagree as to the amount due for water service to the Property under the Prior Water Service Agreements and historic City fees. Ashton and Starlight have been constructing and selling homes at the Property. While negotiating what is due, the Owners have been paying the standard City water impact and water service fees to the City for lots within the Property that received building permits and water service.

E) In order to avoid protracted resolution and/or litigation of this dispute, Owners and City have agreed that the standard City water impact fees and water service rates, fees and charges shall be charged and paid for all lots within the Property in order to obtain water service rather than amounts due under the Prior Water Service Agreements and related historic fees.

NOW THEREFORE, for good and valuable consideration, the Parties agree as follows:

AGREEMENT

1. Water Impact and Service Rates, Fees, and Charges.

A) The Recitals and Exhibits are hereby incorporated into this Agreement.

B) Owners and City agree that the standard City water impact fees and other water rates, fees and charges that are effective at the time Owners request building permits will be charged. Amounts due under the Prior Water Service Agreements or related historic fees will not be charged. Owners acknowledge and agree that all water impact fees, rates, fees and charges are subject to modification by the City, following the procedures of Ariz. Rev. Stat. § 9-463.05 and/or § 9-511.01.

C) Owners may continue to pay standard City water impact fees and water rates, fees and charges on a "per unit" basis.

D) Owners and City agree that neither Owners nor City shall have any rights or obligations to each other under the Prior Water Service Agreements. By and through this Agreement, Owners and City hereby terminate the Prior Water Service Agreements as to each other and the Property, to the extent Owners and City are lawfully able to do so. City is aware that Owners did not receive an assignment of all rights under the Prior Water Service Agreements. Owners warrant and represent that they have not assigned or transferred, or purported to assign or transfer, to any person or entity not a party hereto, any claim or right as to any of the matters referenced, or any part or portion thereof.

2. Release. Owners and City hereby release any claims that either had or may have against the other under or related to the Prior Water Service Agreements. Owners and City also release each other as to claims related to matters described in this Agreement that occurred prior to execution hereof, but do not release each other as to obligations arising under this Agreement. This includes, but is not limited to, claims arising from any alleged delays, loss of service, attorneys' fees and costs. Both Parties agree and acknowledge that this Agreement is in full accord and satisfaction of a disputed claim, and shall not constitute an admission of liability by either Party.

[SIGNATURE PAGES FOLLOW]

IN WITNESS WHEREOF, the undersigned have entered into this Agreement as of the Effective Date stated above.

CITY:

City of Buckeye, Arizona,
an Arizona municipal corporation

By:_____
Eric W. Orsborn, Mayor

ATTEST:

_____
Lucinda J. Aja, City Clerk

APPROVED AS TO FORM:

_____
K. Scott McCoy, City Attorney

OWNERS:

ASHTON:

Ashton Woods Arizona, L.L.C., a Nevada limited liability company

By:_____
Name: Jeremy Ramsdell
Title: VP Land Acquisition

STARLIGHT:

Starlight Homes Arizona L.L.C.,
a Delaware limited liability company

By:_____
Name: Jeremy Ramsdell
Title: VP Land Acquisition

CW:

CW - Algodon, LLC a Delaware limited liability company

By: Coronado West, LLC,
a Delaware limited liability company,
its Manager

By:_____
Name:_____
Title:_____

OWNERS:

ASHTON:

Ashton Woods Arizona, L.L.C., a Nevada limited liability company

By:_____
Name:_____
Title:_____

STARLIGHT:

Starlight Homes Arizona L.L.C.,
a Delaware limited liability company

By:_____
Name:_____
Title:_____

CW:

CW - Algodon, LLC a Delaware limited liability company

By: Coronado West, LLC,
a Delaware limited liability company,
its Manager

By:_____
Name: John Cork
Title: President

EXHIBIT A

LEGAL DESCRIPTION

Lots 1 through 135, inclusive, Lots 188 through 199, inclusive, Lots 281 through 296, inclusive and Lots 300 through 302, inclusive of ALGODON PHASE 2, a subdivision recorded in Book 1654 of Maps, Page 21, records of Maricopa County, Arizona and as amended by Replat of Algodon Phase 2 Lots 285 & 286 and Algodon Phase 3 Lots 275 and 276 recorded in Book 1706, Page 24, records of Maricopa County, Arizona.

AND

Lots 136 through 187, inclusive, and Lots 200 through 280, inclusive of ALGODON PHASE 3, a subdivision recorded in Book 1654 of Maps, Page 22, records of Maricopa County, Arizona and as amended by Replat of Algodon Phase 2 Lots 285 & 286 and Algodon Phase 3 Lots 275 and 276 recorded in Book 1706, Page 24, records of Maricopa County, Arizona.

CITY OF BUCKEYE
Regular Council Meeting
COUNCIL ACTION REPORT

MEETING DATE: 12/17/24	**AGENDA ITEM:** 4.L. CIP No. 100980 Tartesso Communication Tower – Motorola Simulcast Equipment – Cooperative Contract Purchase Addendum (CCPA)
DATE PREPARED: 12/17/24	**DISTRICT NO.:** 1
STAFF LIAISON: James Zwerg, CIP Project Manager, jzwerg@buckeyeaz.gov, (602) 558-2076	
DEPARTMENT: Engineering	**AGENDA ITEM TYPE:** Consent Agenda Items / New Business

ACTION/MOTION: (This language identifies the formal motion to be made by the Council)
Council to take action on the Cooperative Contract Purchase Addendum (CCPA) (Contract No. 2025250) between the City of Buckeye, an Arizona municipal corporation, and Motorola Solutions, Inc., a Delaware corporation, related to CIP No.100980 Tartesso Communications Tower (also known as Tartesso Buckeye Tower (TART)); and authorize the City Manager to execute the CCPA on behalf of the City.

SUMMARY

PROJECT DESCRIPTION:
This contract with Motorola Solutions Inc. is provided under the Arizona State Contract #CTR046830. This new ASTRO nine (9) channel IP simulcast site will provide wireless communication coverage for the sub-site known as Tartesso Buckeye Tower (TART).

BENEFITS:
The new equipment will provide enhanced wireless communication in the growing area adjacent to the project site. This critical infrastructure is for public safety communications and dispatching equipment for the Southwest region, West of the White Tank Mountains.

FUTURE ACTION:
Complete construction and equipping of the Tartesso Buckeye Tower (TART).

FINANCIAL IMPACT STATEMENT:
The contract amount is budgeted in the CIP 100980 communication tower project. The total amount of **$1,116,946.91** encompasses:

Description	Price
Equipment Total	$863,564.00
AZ State Contract Discount	-$131,344.90
Systems Integration and Warranty Support Services	$316,631.43
Sales Tax (on equipment only at 9.3%)	$68,096.38
Total (Including Tax)	**$1,116,946.91**

CURRENT FISCAL YEAR TOTAL COST:
The total cost of this CCPA will not exceed the amount of **$1,116,946.91**

BUDGETED:
Yes

FISCAL YEAR:
FY25

FUND/DEPARTMENT:
50212121-543187

Items related to a project or facility location must include an attached vicinity map for Council Review.
ATTACHMENTS:
CIP 100980.pdf
Contract No. 2025250.pdf

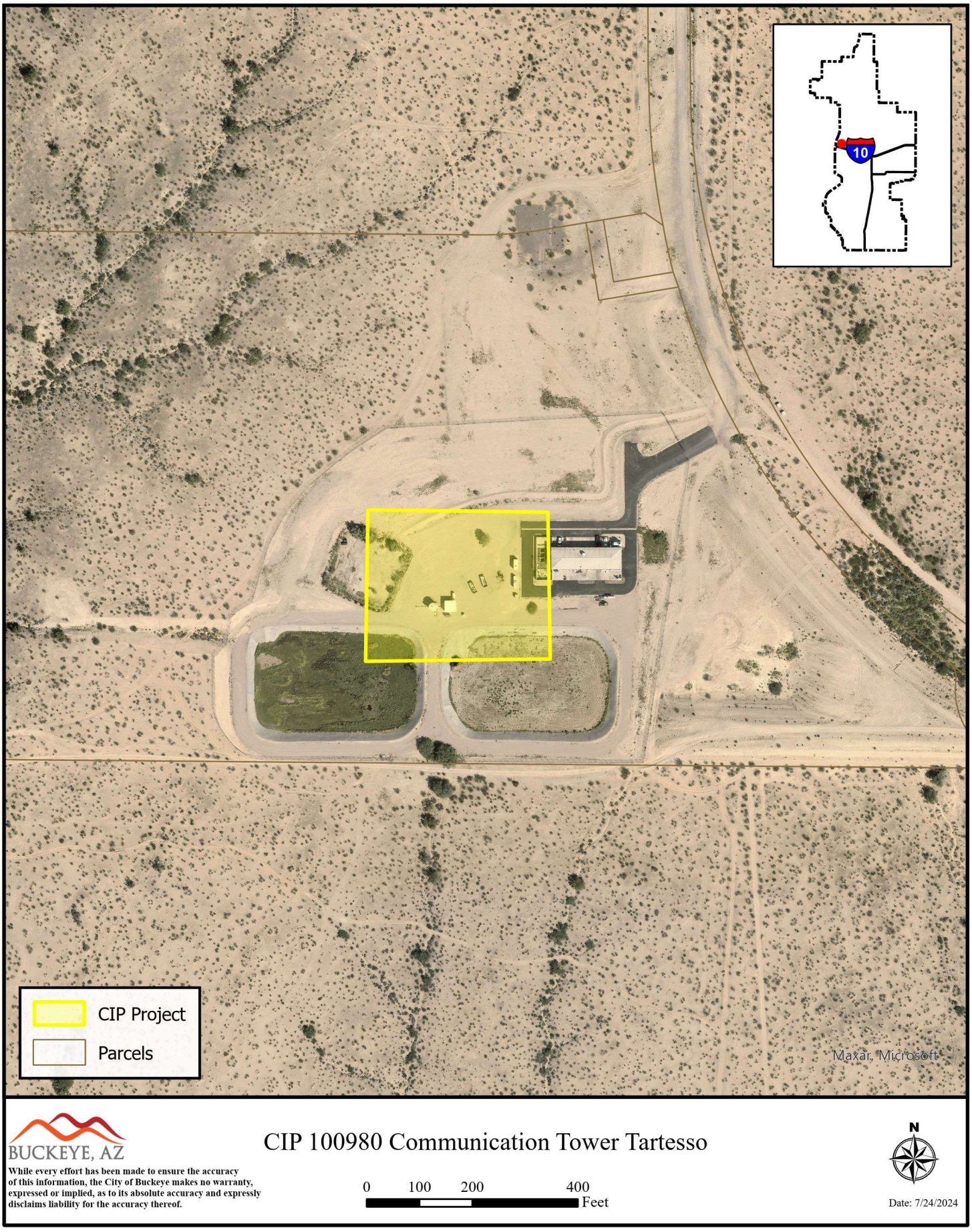

BUCKEYE, AZ

While every effort has been made to ensure the accuracy of this information, the City of Buckeye makes no warranty, expressed or implied, as to its absolute accuracy and expressly disclaims liability for the accuracy thereof.

CIP 100980 Communication Tower Tartesso

0 100 200 400 Feet

N

Date: 7/24/2024

COOPERATIVE CONTRACT PURCHASE ADDENDUM (CCPA)
BETWEEN THE CITY OF BUCKEYE
AND
MOTOROLA SOLUTIONS, INC.

TARTESSO SIMULCAST J SUBSITE
CONTRACT NO. 2025250

THIS COOPERATIVE CONTRACT PURCHASE ADDENDUM (this "Addendum") is entered into as of _____, between the City of Buckeye, an Arizona municipal corporation (the "City"), and Motorola Solutions, Inc., a Delaware corporation (the "Contractor").

WHEREAS, after a competitive procurement process, which is documented in the Award attached hereto as part of Exhibit A, the State of Arizona and Contractor entered into Contract No. CTR046830, dated October 9, 2019 (such contract and subsequent amendments thereto herein referred to as the "State Contract"), which is attached hereto as Exhibit A and incorporated herein by reference); and

WHEREAS, the City is permitted by Section 24-3-16 of the City Procurement Code to make purchases via cooperative purchasing pursuant to a cooperative purchasing contract; and

WHEREAS, the Contractor has made a proposal to the City, which is attached hereto as Exhibit B and incorporated herein by reference (the "Proposal"); and

WHEREAS, the City desires to accept the Proposal and enter into contract with the Contractor under the terms and conditions of the State Contract, by issuing this Addendum to said contract.

THEREFORE, the City now enters into this Addendum with the Contractor for the goods and services set forth in the Proposal. This Addendum incorporates the terms and conditions of the State Contract, except to the extent superseded herein. All references in the State Contract to the State of Arizona shall be read to refer to the City of Buckeye. This Addendum shall be effective as of the date set forth above for approval and remain in effect through June 30, 2025, unless such term is modified or extended pursuant to the terms of the State Contract. Payments to the Contractor shall be calculated in accordance with the Fee Schedule, which is attached hereto as part of Exhibit B, in a total amount not to exceed **One Million One Hundred Sixteen Thousand Nine Hundred Forty-Six Dollars and Ninety-One Cents ($1,116,946.91)**.

FURTHER, this Addendum is subject to cancellation pursuant to ARS §38-511.

FURTHER, to the extent applicable, the Contractor and its subcontractors warrant compliance with all federal immigration laws and regulations that relate to their employees and their compliance with the E-verify requirements under A.R.S. § 23-214(A). The Contractor's or its subcontractors' failure to comply with such warranty shall be deemed a material breach of this Addendum and may result in the termination of this Addendum by the City. The City retains the

right to inspect the papers of the Contractor's or its subcontractors' employees who perform any work or services pursuant to this Addendum to ensure compliance with these warranties.

FURTHER, to the extent applicable, the Contractor warrants that it is not participating and will not participate in prohibited activity in contravention of A.R.S. § 35-393.01.

FURTHER, to the extent applicable under ARIZ. REV. STAT. § 35-394, Contractor certifies that it does not currently, and agrees for the duration of this Agreement that it will not use (i) the forced labor of ethnic Uyghurs in the Peoples Republic of China ("ethnic Uyghurs"), (ii) any goods or services produced by the forced labor of ethnic Uyghurs, or (iii) any Contractors, subcontractors, or suppliers that use the forced labor or any goods or services produced by the forced labor of ethnic Uyghurs. If Contractor becomes aware that it is not in compliance with this paragraph, Contractor shall notify the City of the noncompliance within five (5) business days of becoming aware of it. If Contractor fails to provide a written certification that Contractor has remedied the noncompliance within one hundred eighty (180) days after that, this Agreement shall terminate unless the termination date of this Agreement occurs before the end of the remedy period, in which case this Agreement terminates on the Agreement termination date.

FURTHER, the Parties agree that the Addendum and Exhibits thereto shall be governed by State of Arizona law and suits pertaining to the Addendum and Exhibits thereto may only be brought in courts located in Maricopa County, Arizona.

FURTHER, all modifications, including but not limited to service additions and deletions, will be made in writing and with the written agreement of both parties.

FURTHER, in the event of any inconsistency between this Addendum, the State Contract, and Exhibit B, the documents shall govern in that order.

CLICKWRAP TERMS EXCLUDED, in the event the Contractor's terms of sale or service were provided to the City only upon "acceptance" of a "clickwrap" or "clickthrough" agreement, such terms of sale or service shall not be binding upon the City. No oral agreement, "clickwrap" or "clickthrough" agreement or other understanding shall in any way modify a City issued or approved contract or the terms of this Cooperative Contract Purchase Addendum (CCPA).

[SIGNATURE PAGE TO FOLLOW]

THEREFORE, the Parties have executed this Addendum as of the date first set forth above.

CITY

THE CITY OF BUCKEYE,
an Arizona Municipal corporation

Dan Cotterman, City Manager

ATTEST:

Lucinda Aja, City Clerk

RECOMMENDED:

William Kauppi

William Kauppi, Chief Financial Officer

APPROVED AS TO FORM:

K. Scott McCoy, City Attorney

CONTRACTOR

MOTOROLA SOLUTIONS, INC.,
a Delaware corporation

J. J. Trivedi

J. J. Trivedi, Territory Vice President

Adobe Acrobat Sign Transaction Number: CBJCHBCAABAA0cZ7rtYiU2TRHTTP_SSD5b4NH3UcbSI0

EXHIBIT A
TO
COOPERATIVE CONTRACT PURCHASE ADDENDUM
CONTRACT NO. 2025250

[State Contract]

See following pages.

Contract Amendment

CTR046830 Amendment One (1)

Arizona Department of Administration
State Procurement Office
1802 W Jackson St., #100
Phoenix, AZ 85007

CONTRACTOR:	**STATE AGENCY:**
MOTOROLA SOLUTIONS INC 3332 E. Broadway Rd. Phoenix, AZ 85040	AZ Department of Administration (ADOA) State Procurement Office 1400 W Washington St. 3100 Phoenix, AZ 85007
CONTACT: Walter Whately **PHONE:** (520) 457-8604 **EMAIL:** walter.whately@motorolasolutions.com	**CONTACT:** Jim Atkins **PHONE:** (602) 245-8268 **EMAIL:** james.atkins@azdoa.gov

Public Communications Equipment and Services

Pursuant to Section 2-D: Uniform Terms and Conditions, Section 5.0 Contract Changes, 5.1 Amendments, of the above referenced contract, it is hereby amended as follow:

1) In accordance with Special Terms and Conditions, Section 3.1, Term of Contract, the contract is hereby extended through **October 9, 2026**.

ALL OTHER REQUIREMENTS, SPECIFICATIONS, TERMS AND CONDITIONS REMAIN UNCHANGED

* ***Please ensure all required Certificate Of Insurance are updated and submitted to the State Procurement Office.***

ACKNOWLEDGEMENT AND AUTHORIZATION

This amendment shall be fully executed upon the electronic approval in the State e-Procurement system by an authorized representative of the Contractor and applied to the contract in the State e-Procurement system by the Procurement Officer or delegate.

Public Communication Equipment and Services

CTR046830

Motorola Solutions Inc.

This contract is for public communication equipment and services for all State of Arizona Agencies, Boards and Commissions including members of the State of Arizona Purchasing Cooperative. The sections awarded include:

- **2-Way Radios**
- **Digital Microwave Terminals**
- **LMR Base Station Antennas, Microwave Antennas**
- **Radio Dispatch Consoles**
- **Back-up Batteries**
- **Prefab Communications Shelter**
- **Service**

Table of Content

- **Offer and Acceptance**
- **Part 2: Scope, Pricing and Terms and Conditions (Rev 2)**
- **3-C Proposed Subcontracts**
- **5-B Conformance Statement**
- **Exceptions**
- **BAFO Change Log**

The solicitation for this contract was ADSPO19-00008376 and was started in ProcureAZ. The solicitation file can be found in APP under BPM001941.

Attachment 1
Offer and Acceptance Form

SUBMISSION OF OFFER: Undersigned hereby offers and agrees to provide Biometric Products and Services to in compliance with the Solicitation indicated above and our Offer indicated by the latest dated version below:

Initial Offer:	1. **September 4, 2018** (date)	LM (initial)						
Revised Offers:	2. x (date #1)	(initial)	3. x (date #1)	(initial)	4. x (date #1)	(initial)		
	5. x (date #4)	(initial)	6. x (date #5)	(initial)	7. x (date #6)	(initial)		
Best and Final Offer:	8. **September 16, 2019** (date)	LM (initial)						

Motorola Solutions, Inc.
Offeror company name

Signature of person authorized to sign Offer — Initials

2900 S. Diablo Way Ste 150
Address

Larry Mabry MSSSI Vice President & Director Sales
Printed name and title

Tempe, AZ 85282
City | State | ZIP

Walter Whatley Senior Account Executive
Contact name and title

36-1115800
Federal tax identifier (EIN or SSN)

Walter.whatley@motorolasolutions.com 520-457-8604
Contact Email Address — Contact phone number

CERTIFICATION: By signature in the above, Offeror certifies that it:

1. will not discriminate against any employee or applicant for employment in violation of Federal Executive Order 11246, [Arizona] State Executive Order 2009-9 or A.R.S. §§ 41−1461 through 1465;
2. has not given, offered to give, nor intends to give at any time hereafter any economic opportunity, future employment, gift, loan, gratuity, special discount, trip, favor, or service to a public servant in connection with the submitted offer. Failure to provide a valid signature affirming the stipulations required by this clause will result in rejection of the Offer. Signing the Offer with a false statement will void the Offer, any resulting contract, and may be subject to legal penalties under law;
3. complies with A.R.S. § 41-3532 when offering electronics or information technology products, services, or maintenance; and
4. is not debarred from, or otherwise prohibited from participating in any contract awarded by federal, state, or local government.

ACCEPTANCE OF OFFER: State hereby accepts the initial Offer, Revised Offer, or Best and Final Offer identified by number # at the top of this form, and which was dated **date** (the Accepted Offer). Offeror is now bound (as Contractor) to carry out the Work under the attached Contract, of which the Accepted Offer forms a part. Contractor is cautioned not to commence any billable work or to provide any material or perform any service under the Contract until Contractor receives the applicable Order or written notice to proceed from Procurement Officer.

State's Contract No. is: CTR046830 **The effective date of the Contract is: 10-09-2019** **Contract awarded: 10-09-2019**

Procurement Officer signature — Procurement Officer, James Atkins

Part 2: Scope, Pricing and Terms and Conditions (Rev 2)

Table of Contents

SECTION 2-A: Scope of Work 2

1.0 Background 2

2.0 2-Way Radios 2

3.0 Digital Microwave Terminals 25

4.0 LMR Base Station Antennas, Microwave Antennas 39

5.0 Radio Dispatch Consoles 44

6.0 Generators 57

7.0 Back-up Batteries (Including Solar) 58

8.0 Prefab Communications Shelters 58

9.0 Service 59

10.0 Consultation and Third-Party Oversight 60

SECTION 2-B: Pricing Document 62

1.0 Compensation 62

2.0 Pricing 64

3.0 Funding 65

4.0 Invoicing 66

5.0 Payments 67

SECTION 2-C: Special Terms and Conditions 69

SECTION 2-D: Uniform Terms and Conditions 89

SECTION 2-A: Scope of Work

1.0 Background

1.1 The intent of this Solicitation is to provide both public communications equipment and services to support the State of Arizona's Agencies, Boards and Commissions including members of the State of Arizona Purchasing Cooperative.

1.2 The Solicitation shall describe the State's requirement and minimum technical specifications for the equipment and services the State wishes to purchase under the resultant contract(s).

1.3 This is a multi-award contract with Offeror ability to provide proposal's on one or more sections of this Scope of Work. Award will be made by Scope of Work Sub-section(s) two (2) through nine (9) independently.

2.0 2-Way Radios

2.1 **Analog & Digital Vehicular Mounted Mobile Radio Equipment**: Various types of vehicular-mounted mobile radio equipment for VHF, UHF, and 700/800 MHz trunked and conventional, analog and digital radio equipment

2.2 **Mobile Data Radio Vehicular Mounted Equipment**: UHF or 700/800 MHz mobile digital data link radios.

2.3 **Desk-top Analog &Digital Base Station Radio Equipment:** High-quality VHF, UHF, and 700MHz, 806-869 MHz, conventional, and 700/800 MHz trunked, multi-channel base/control stations using phase/frequency or digital modulation.

2.4 **Analog & Digital Personal/Portable Radio Equipment:** Various types VHF, UHF, and 700/800 MHz, conventional and trunked personal/portable radio transceivers.

2.5 **Analog & Digital Motorcycle Rear-mounted Radios:** 160+ channel, two-piece, VHF High-band, UHF, and 700/800 MHz, all solid-state motorcycle radio.

2.6 **Low Power Vehicular Repeater:** VHF, UHF, and 700/800 MHz in-vehicle mounted repeater, for attachment to the vehicle's mobile radio and extending the range of the user's portable radio.

2.7 **Multi Band Radios:** Mobile and potables capable of operating on more than one public safety band.

2.8 **Base/Mobile Relay Station Fixed Radio Equipment:** VHF High-band, UHF, 700/800 MHz continuous duty, mobile relay/base station equipment using phase, frequency, or digital modulation.

2.9 **Fixed Link Base Radios:** VHF, UHF, and 700/800 MHz fixed radios for site to site linking.

2.10 **Communications Service Monitors:** Communications Service Monitors for use in the maintenance of Arizona's Radio Communications Systems.

The following are definitions of terminology as they apply to the State's requirements as stated in this solicitation:

- ***VHF (High-band):*** means 150-174 MHz, additional coverage desirable but not required
- ***UHF***: means 450-470 MHz, additional coverage desirable but not required.
- ***700/800***: means radios capable of operation across the complete 700 and 800 MHz public safety band (769-869)

- ***800***: means radios capable of operating on FCC designated Public Safety LMR channels above 806 MHz
- ***Narrowband***: radios meeting FCC 12.5 KHz channel widths and meeting the mask requirements of FCC Part 90.210d.
- ***FDMA***: Frequency Division Multiple Access as applies to P25 or DMR.
- ***TDMA***: Time Division Multiple Access as applies to P25 Phase II, or Open Sky.
- ***P25***: Project 25 per TIA standards AA102 etal
- ***High Tier Subscriber Equipment***: means radios designed for Public Safety applications with the highest transmitter and receiver performance specifications: Frequency Stability, Hum and Noise, Spurious Emissions, High Power; Receive Adjacent Channel Selectivity, Spurious and Intermodulation Rejection. Available features like: P25 conventional and trunking operations FDMA – TDMA, high channel / talk group count (1000+), AES / DES encryption, MultiKey, OTAR, OTAP, multiple display options, including multi–line alpha-numeric, keypad; Meets Mil Spec 810 C/D/E/F.
- ***Mid-Tier Subscriber Equipment***: means radios designed for Public Safety applications with good transmitter and receiver performance specifications: Frequency Stability, Hum and Noise, Spurious Emissions, Mid Power; Receive Adjacent Channel Selectivity, Spurious and Intermodulation Rejection. May include features like: P25 trunk and conventional operations, reduced channel / talk group count (100+), Encryption; Meets Mil Spec 810 C/D/E/F. High-Tier performance specifications apply unless otherwise listed.
- ***Low Tier Subscriber Equipment***: means radios designed for Business & Industry applications with good transmitter and receiver performance specifications for: Hum and Noise, Spurious Emissions; Receive Adjacent Channel Selectivity, Spurious and Intermodulation Rejection, Mid Power & reduced channel count; Meets Mil Spec 810 C/D/E/F.

2.11 **Radio Standards -** The radio equipment provided by the contractor shall meet or exceed EIA, TIA, FCC, IEEE and NEMA requirements, standards, specifications, practices and/or procedures current at the time of contract award. All equipment will be FCC Type Approved for class of service specified. The measurement procedures and performance standards for land mobile radio equipment specified herein shall comply with the TIA/EIA-603 standards. Standards for equipment employing digital C4FM or CQPSK modulation shall comply with the TIA/EIA-102 standards. Where the State's specification are more stringent than those of EIA/TIA, the State's specification shall apply.

2.12 **Transmitter Characteristics -** Transmitter shall use only solid-state active components. Synthesizing techniques of frequency generation are required for all but the Low-Tier models. Each Low-Tier unit will have a solid state sub-audible tone encoder.

2.12.1 Operating Frequency: The transmitter shall be factory supplied and aligned to the specific RF frequencies given in the purchase order.

2.12.2 Transmitter Standards: The transmitter shall meet or exceed the minimum standards as set forth in EIA/TIA Standard RS152B. Where the requirements of the State's specifications are more stringent than those of the EIA, the State's specifications shall apply. The transmitter shall comply with all FCC Rules and Regulations in effect on the date of issuance of the purchase order.

2.12.3 System Modulation, Narrowband:

2.12.3 (a) High-Tier: VHF/UHF/700/800: Analog - 11K2F3E / (800 -16K0F3E); Digital - 8K11F1E, and others in compliance with FCC efficiency standards

2.12.3 (b) Low-Tier: VHF or UHF: +/-2.5 KHz (11K2F3E)

2.12.4 Audio Frequency Harmonic Distortion:

High-Tier: All Bands: Less than 3% at 1000 Hz and 60% maximum deviation

Low Tier: All Bands: Less than 5% at 1000 Hz and 60% maximum deviation.

2.12.5 Carrier Frequency Stability: Radios offered under this contract shall meet or exceed the FCC stability requirements listed under 47CFR90.213 and 47CFR90.539. High-Tier radios are expected to exceed these specifications as applicable. All units will be priced and sold meeting these specifications.

2.12.6 Frequency Spread: Per Band definition; with no degradation in power output.

2.12.7 RF Output Impedance: 50 ohms.

2.12.8 Time-out Circuit: The transmitter shall be equipped with an adjustable time-out timer circuit that will turn off the transmitter after continuous transmitting. An audio tone shall be provided that will alert the operator that the transmitter has been timed out. Releasing the microphone push-to-talk button shall instantly reset the timer.

2.12.9 Continuous Toner Encoder: The conventional (non-trunked) transmitter shall be supplied with the capability to generate up to 32 sub-audible tones to modulate the transmitter for the full duration of all transmissions. The tone generators shall be designed for continuous operation with total harmonic distortion less than 10%. The tone encoder shall conform to all standards of EIA/TIA Standard RS-220A. There shall be available twenty (20) narrow band tone channels between 100.0 and 192.8 Hz inclusive (of Groups A and B) in accordance with EIA/TIA Standard RS-220A for continuous tone-controlled squelch system.

The frequency of the sub-audible tone generator shall be controlled by a solid-state tone network or be software based and shall be maintained within +/- 0.5% of its specified frequency over the temperature range of -30 degrees C to +60 degrees C.

The transmitter unit shall transmit a special sub-audible tone burst upon release of the push-to-talk switch. This burst shall last 160 +/- 40 msec. and be the same frequency as the regular tone supplied for a particular channel but out of phase by 180 +/-60 degrees from the previously transmitted tone. This circuitry shall be explicitly designed for the elimination of receiver "squelch tail."

2.12.10 Final Amplifier Protection: The transmitter output stage shall be protected from burnout due to excessive antenna VSWR. No damage shall result when the transmitter is subjected to a short or open circuit antenna output during continuous keying for a one minute period.

2.13 **Receiver Characteristics -** The receiver shall be completely solid-state, utilizing only high-quality transistors, integrated circuits, diodes, and other solid-state devices. The receiver shall be rated for continuous operation. A channel scanning feature with selectable priority may be listed as a separate option.

2.13.1 Operating Frequency: Per the band definitions.

2.13.2 Receiver Standards: The receiver shall meet or exceed the "minimum standards" as set forth in EIA/TIA Standard RS204C. Where the requirements of the State's specification are more stringent than those of the EIA/TIA, the State's specifications shall apply.

Definitions, standards, and methods of measurements shall conform to EIA/TIA Standard RS204C, unless specifically described otherwise.

2.13.2 (a) EIA 12 dB SINAD Sensitivity:

- High-Tier: All Bands: 0.25 microvolt or better, Analog
- Mid-Tier: All Bands: 0.3 microvolt or better, Analog
- Low-Tier: All Bands: 0.35 microvolt or better, Analog

2.13.2 (b) RF Input Impendence: 50 ohms

2.13.3 Squelch Circuitry: The conventional analog (non-trunked) receiver shall be supplied with carrier squelch and tone-coded squelch capability for a minimum of 32 CTCSS tone frequencies. The tone frequencies will be specified in the State purchase order. Tone decode circuitry shall be the sub-audible CTCSS type as described in EIA/TIA Standard RS-220A and shall meet all specifications of RS-220A.

There shall be two modes of operation, to be selected at the will of the operator. These are:

- Carrier squelch operation - The receiver squelch opens for any sufficiently strong on-frequency RF carrier; and
- Tone-coded squelch and carrier squelch operation- The receiver is muted until the incoming on-frequency RF carrier is modulated by the proper continuous sub-audible tone and the on frequency RF carrier is sufficiently strong to break squelch as determined by the carrier squelch adjustment control. This "and" squelch condition shall remain continuous for the duration of carrier reception. Selection of the mode of operation shall be made by manual switch control.

2.13.4 Carrier Actuated Squelch Circuit: The carrier actuated squelch shall be of the adjustable sensitivity type with a continuously variable control. The squelch circuit shall be designed to not respond to noise bursts.

2.13.5 Tone Actuated Squelch Circuits: The tone actuated squelch circuit shall conform to all standards of EIA/TIA Standard RS-220A. Continuous presence of the proper modulating tone shall be required to keep the squelch open when in the carrier squelch and tone-coded squelch mode of operation.

2.13.6 Tone Squelch Characteristics:

- Tone deviation shall not exceed 10% of the peak system deviation. A tone signal 3% removed from the frequency of the proper tone shall not operate the squelch circuit, regardless of the level recovered at the discriminator.
- The tone modulation shall be filtered from the voice signal such that with tone deviation set at 20% of the peak system deviation, the tone fundamental frequency shall be at least 30 dB below the level of a 1000 Hz tone transmitted at 2/3 rated system deviation with the receiver adjusted for maximum rated audio output.
- The tone squelch circuit shall respond by squelching the receiver within 160 +/-40 msec. of a tone burst 180 +/-60 degrees out of phase with the previous tone. This circuitry shall be explicitly designed to eliminate receiver "squelch tail."

2.14 Transceiver Unit Specifications:

2.14.1 Antenna Switching. Antenna switching must be accomplished by a hermetically sealed relay switch or some other reliable mechanical or electrical means.

2.14.2 Environmental Standards. All equipment provided under this specification shall be tested to, and conform to, the requirements of Mil Std. 810C/D/E for shock, vibration, humidity, dust, salt, fog, and other weather conditions.

2.15 Trunking Operation Option:

2.15.1 High Tier: Trunked radio options will be considered. Any such analog trunked radio shall meet the same technical RF specifications as the conventional model. Analog trunked radios shall conform to APCO 16 protocols. Digitally trunked radios should be of the same model line as the conventional radio, and shall be fully compatible with the P25 TIA/EIA Phase I Standard for FDMA, or the TDMA P25 Phase II or Open Sky Public Safety Trunking.

2.15.2 Low Tier: Trunked radio options will be considered. Any such trunked radio shall meet the same technical RF specifications as the conventional model.

2.15.3 Auxiliary Test Equipment: Associated test equipment such as plug-in service meters, computer interface cables/boxes, and test bench control set-ups may be offered. Any designated service meter should be compatible with the transceiver metering socket(s) and have scale calibrations consistent with the readings called for in the service manual. The test-bench control set-up shall include the proper style control heads, speaker, microphone, metering panel, and interconnecting cabling at least 6 feet in length. A price shall be included for an optional frequency programmer and software.

2.16 ANALOG & DIGITAL VEHICULAR MOUNTED MOBILE RADIO EQUIPMENT

2.16.1 **Model Specifications**

2.16.1 (a) **High-Tier, Mid-Tier:** The following specification describes various types of vehicular-mounted mobile radio equipment. These radios may be either one-piece (dash mount) or two-piece (remote mount). These radios are: VHF High-band, UHF and 700/800 MHz radios capable of analog conventional and trunked; and digital conventional and trunked radio operation.

2.16.1 (b) **Low-Tier:** The following specification describes various types of vehicular-mounted mobile radio equipment; High-band VHF, UHF, and 800 MHz. These radios may be either one-piece (dash mount) or two-piece (remote mount).

2.17 Electrical Specifications:

The equipment shall be designed to operate from a nominal 12 volt negative ground vehicle electrical system. Adequate overload and reverse polarity protection shall be provided. Control circuits shall be arranged so that the vehicle ignition switch will disable both the transmitter and receiver when in the OFF position, but allow operation when in the ACCESSORY position.

2.18 Transmitter Characteristics:

The transmitter shall be of modern solid-state design.

2.18.1 **Carrier Power Output Rating: (all minimum intermittent power at 20% duty cycle)**

2.18.2 **High Tier VHF:** 40 watts or, 50-110 watts, adjustable UHF: 40 watts or 50-100 watts, adjustable 700-800 MHz Trunked: 10-30 Watts

2.18.3 **Low-Tier VHF**: 25 Watts minimum, adjustable UHF: 25 Watts minimum, adjustable 700-800 MHz: 15 Watts minimum, adjustable.

2.18.4 Conducted and Radiated Spurious Emission Attenuation:

2.18.5 **High-Tier** -75 dB or greater

2.18.6 **Mid-Tier** -70 dB or greater

2.18.7 **Low Tier** -55 dB or greater

2.18.8 **Audio Frequency Harmonic Distortion:**

2.18.8 (a) High-Tier - All Bands: Less than 3% at 1000 Hz and 60% maximum deviation

2.18.8 (b) Low Tier - All Bands: Less than 5% at 1000 Hz and 60% maximum deviation

2.18.9 **FM Hum and Noise Attenuation:**

2.18.9 (a) **High-Tier** -40 dB (12.5 KHz)

2.18.9 (b) **Low Tier** -35 dB (12.5 KHz)

2.19 Receiver Standards

The receiver shall meet or exceed the "minimum standards" as set forth in EIA/TIA Standard RS-204C. Where the requirements of the State's specification are more stringent than those of the EIA/TIA, the State's specifications shall apply. Definitions, standards, and methods of measurements shall conform to EIA/TIA Standard RS-204C, unless specifically described otherwise.

2.19.1 **Adjacent Channel Selectivity Desensitization**

2.19.1 (a) High-Tier -70 dB or better (12.5 KHz)

2.19.1 (b) Mid-Tier -65dB or better (12.5 KHz)

2.19.1 (c) Low-Tier -60 dB or better (12.5 KHz)

2.19.2 **Spurious Response Attenuation:**

2.19.2 (a) High-Tier -80 dB, or better (12.5 kHz)

2.19.2 (b) Low-Tier -70 dB, or better (12.5 kHz)

2.19.3 **Intermodulation Spurious Attenuation:**

2.19.3 (a) High-Tier -80 dB, or better (12.5 kHz)

2.19.3 (b) Low-Tier -70 dB, or better (12.5 kHz)

2.19.4 **Audio Power Output:**

2.19.4 (a) High-Tier 10 watts minimum, 3% maximum distortion

2.19.4 (b) Low-Tier 7.5 watts minimum, 5% max. dist., external speaker

2.20 Transceiver Unit Specifications:

2.20.1 **Power Requirements.** The unit shall draw less than 1.0 amp of current with the receiver and transmitter in a quiescent "ON" condition. The transmitter/receiver shall be a complete integral unit with all previously specified items, including AF or RF power amplifier built internally into the transceiver unit.

2.20.2 **Physical Construction**

- The complete transmitter and receiver combination shall be mounted in a single housing.

- The housing shall be furnished in enamel or lacquer over a non- ferrous plating of A-N standard chrome type metal primer or equal.
- The housing shall be of steel or equivalent construction and not louvered, to inhibit the entrance of dust and other foreign matter. A locking device shall be used to prevent the unit from being removed from its mounting by unauthorized personnel.
- All interconnection cabling between the transmitter, receiver, and power supply shall be accomplished internally in the equipment housing. With exception of the power, control, and antenna cabling, there shall be no external connections or cabling on the equipment housing.
- All frequency determining elements in the transmitter and receiver shall have a locking or clamping device to ensure permanent connection during operation.
- The maximum transmitter/receiver dimensions shall not exceed 2.5" x H x 7.0" W x 13.0" L. All but the High-Tier Model must weigh less than 8.5 lbs. The complete mobile unit shall be capable of normal operation when mounted in any physical position.

2.20.3 **Interconnecting Cables.** All cables and wires shall be furnished to interconnect the radio set with its accessories and the vehicle's electrical system. Cables shall be insulated, waterproofed and equipped with appropriate connectors. All plug-in connectors shall be of the heavy-duty type and shall be provided with threaded coupling rings or other substantial fool proof locking devices to prevent accidental disconnect.

2.21 Supplied Components: The vendor shall supply all necessary components such as cased permanent magnet type loud speaker, combination transmitter/receiver, separate control head, a palm -type microphone, all ROMS, necessary control, power and cables, and all required mounting hardware as part of the Low-Tier transceiver package.

2.21.1 **Microphone and Control Head**

- A palm-type dynamic low impedance microphone with preamplifier and spring clip shall be supplied with each mobile unit. The microphone shall be ruggedly constructed to withstand the severe usage of mobile operations and shall have a push-to-talk switch mounted on the microphone housing. The microphone shall be provided with a nominal 4 ft. length self-retracting coil type cord. A separate matching control head (not part of the microphone) including all controls required for operation of the transmitter/receiver equipment shall be furnished as part of the equipment.
- The control head for a 2-piece control unit shall be capable of mounting on the vehicle dash or floorboard and a suitable inter-cabling kit shall be provided to interconnect the control head and the transmitter/receiver equipment. The control cable to be supplied shall be at least 20 feet in length and shall not have any intermediate junction boxes or barrier strips.
- The control head shall incorporate as a minimum:
    1. An ON and OFF switch.
    2. An indicator lamp to indicate that the radio is on.
    3. A squelch sensitivity control.
    4. Tone squelch disable switch, which may be located on the microphone hang-up brackets.

5. A volume control button or knob. (Clockwise Volume increase)
6. A red light that illuminates when the transmitter push-to-talk switch is activated.
7. Channel (Talk Group) selection control switch or knob.
8. Scan switch with channel priority select.
9. (**High-Tier/ Mid-Tier Requirement only**) A LCD alphanumeric readout display for channel information.

- All indicator lights shall be LED or LCD, or some other proven long-life illumination device (30,000 hour average life or better for High-Tier, 10,000 hour average life or better for all other models). All background lighting shall be diffused and non-glaring, with intensity sufficient for high ambient daytime lighting.
- The alphanumeric display control head shall be factory preprogrammed to the customer's channel labeling requirements. Radio frequency channeling shall also be preprogrammed at the factory.

2.21.2 **Loud Speaker.**
A heavy-duty permanent magnet loud speaker rated for a minimum of 10 watts and mounted in a heavy metal or high impact plastic case with mounting brackets shall be provided.

2.21.3 **Power Cable**.
One battery cable (hot) of at least 22 feet in length shall be supplied with each unit.

2.22 Optional Accessories:

The following accessories to the mobile unit are desired:

- **(High-Tier, Mid-Tier,)** Digital voice encryption, including AES and DES.
- **(High-Tier, Mid-Tier, Low-Tier)** Digitally controlled remote control head with alpha/numeric readout.
- (**High-Tier, Mid-Tier, or Low-Tier)** Analog or digital voice encryption, DTMF tone generator from microphone.

2.23 Servicing:

Transmitter/receiver equipment shall be readily removable from the mount for routine servicing. There shall be provisions for convenient metering of all essential transmitter and receiver circuits from multi-pin metering socket(s). All metering points shall be properly decoupled and connected to the metering socket(s). Provision for automated test set radio analysis is acceptable. All circuit modules shall be easily accessible plug-in printed circuit type fiberglass boards. Easy access shall be provided to all other portions of the unit.

2.24 <u>MOBILE, DATA RADIO, VEHICULAR MOUNTED EQUIPMENT</u>

This specification describes the minimum requirements for a UHF or 700/800 MHz mobile digital data link radio. The radio shall operate on a 25 KHz bandwidth channel at various data speeds from 19.2 Kb/sec to 44.3 Kb/sec, or 9.6 Kb/sec to 22 Kb/sec on a 12.5 KHz channel, or greater, depending upon signal conditions and BER conditions. Diversity receiver technology is encouraged, but not mandatory. Specifications shall meet voice radio specification unless otherwise listed.

2.24.1 **Transmitter Characteristics:**

2.24.1 (a) Operating Frequency. The transmitter shall be capable of operating on at least 16 separate conventional frequencies. The transmitter shall be factory supplied and aligned to the specific RF frequencies given in the purchase order.

Carrier Power Output Rating: (all minimum intermittent power at 20% duty cycle)
UHF: 10-40 Watts
800 MHz: 10-35 Watts
900 MHz: 10-25 Watts

- **System Modulation:**

  UHF/800 MHz: Digital (8K6DF1D, 15K3F1D, 15K0F1D, 15K6F1D

- **Conducted and Radiated Spurious Emission Attenuation:**

  UHF/800 MHz: -75 dBc

- **Harmonic Emission Attenuation**:

  UHF/800 MHz: -80 dB

- **FM Hum and Noise Attenuation:**

  UHF/800 MHz: -40 dB below 60% max deviation

2.25 Receiver Characteristics:

2.25.1 **Operating Frequency**

The receivers shall be capable of receiving on a minimum of 16 channels at UHF 450 MHz, and at 800 MHz.

2.25.2 **Receiver Standards:**

- **EIA 12 dB SINAD Sensitivity:**

  All Bands: 0.35 microvolts

- **Adjacent Channel Selectivity Desensitization:**

  UHF/800/900 MHz: 65 dB (12.5 KHz narrowband digital)

  UHF/800 MHz: 75 dB (wideband 25 KHz)

- **Spurious Response Attenuation:**

  UHF: -80 dB

  800/900 MHz: -80 dB

- **Intermodulation Spurious Attenuation:**

  UHF/800 MHz: -75 dB

- **Frequency Stability:**

  UHF/800/900 MHz: 1.5 ppm

2.26 DESK-TOP ANALOG & DIGITAL BASE STATION RADIO EQUIPMENT:

This specification describes low and mid power radios, for desktop or wall mount, for use either as a local base or as a control station for a repeater or trunked network.

2.26.1 This device has an integrated housing with the AC power supply and the radio.

2.26.2 An option for this class is a remote line interface.

2.26.3 Offerings shall meet the corresponding mobile radio applications.

2.27 ANALOG & DIGITAL PERSONAL /PORTABLE RADIO EQUIPMENT

2.27.1 Model Specifications

2.27.1 (a) High-Tier

This specification describes various types VHF, UHF, and 700-800 MHz, narrow band, conventional and trunked personal/portable radio transceivers.

Specifications for battery charging units and jerk-and-run mobile radio converter consoles are also included.

2.27.1 (b) Mid-Tier

This specification describes various types VHF, UHF, and 700/800 MHz analog, digital, conventional and trunked personal/portable radio transceivers.

2.27.1 (c) Low-Tier

This specification describes various types VHF, UHF, and 800 MHz analog conventional and trunked personal/portable radio transceivers

2.28 Transmitter Standards

Definitions, standards, and methods of measurement shall conform to EIA Standard RS-316B, unless otherwise noted.

2.28.1 (a) Carrier Power Output

- High-Tier

VHF: 5 watts minimum

800 MHz: 3 watts minimum

- Low-Tier

2 watts minimum

2.28.1 (b) Spurious and Harmonic Emission

- High-Tier -75 dBc
- Low-Tier -60 dBc

2.28.1 (c) FM Hum and Noise

- High-Tier -40 dB or better (12.5 kHz)
- Low-Tier -35 dB or better (12.5 kHz)

2.28.1 (d) Transmit Audio Distortion

- High-Tier Less than 3%
- Low-Tier Less than 5%

2.29 Receiver Characteristics

2.29.1 Adjacent Channel Selectivity

• High-Tier -61 dB or better (12.5 kHz)

• Low-Tier -50 dB or better (12.5 kHz)

2.29.2 Intermodulation

- High-Tier -75 dB or better (12.5 kHz)
- Low-Tier -60 dB or better (12.5 kHz)

2.29.3 Spurious and Image Rejection

- High-Tier -75 dB or better (12.5 kHz)
- Low-Tier -60 dB or better (12.5 kHz)

2.29.4 Audio Power Output

- High-Tier 500 mw at less than 3% distortion
- Low-Tier 500 mw at less than 5% distortion

2.30 General Electric and Mechanical Characteristics:

2.30.1 **Components Included:**

The vendor shall supply all necessary components, such as transceiver, battery, and flexible antenna.

The radio shall effectively have the following exterior controls: Power on/off, volume, channel selector, and push-to-talk switch. The radio shall be supplied with an integral microphone and loud-speaker. The push-to-talk switch shall be located on the side of the transceiver so it may be conveniently depressed while speaking into the microphone.

2.30.2 **Programming:**

- Each unit under this section except for the Low-Tier model shall be completely Field programmable. All channel information such as transmit and receive RF frequencies; CTCSS tone frequencies, and anything else which would be functionally tied to the channel selector of the radio, shall be fully field programmable and reprogrammable utilizing a single programming unit.
- Field Programmer - Each Vendor shall provide as an option, a field programming unit which is designed to fully program the channel personality of each radio under this section. The programmer may either be a self-contained programming unit, or the programmer may consist of an interface unit and software to convert a personal computer to a field programmer.

2.31 Battery Cycle

The rechargeable battery supplied with each radio shall have the capacity to provide at least 8 hours of service when used in a 5% transmit, 5% receive, 90% standby duty cycle.

2.32 Battery Chargers

2.32.1 **High-Tier:** Single and multiple (minimum 5 unit) battery chargers shall be available and priced separately on the price pages. The chargers shall recharge a completely discharged battery within 3 hours; thereafter a low (trickle) charge rate shall be available.

The chargers shall be UL approved and operate from a 120-volt A.C., 60 Hz power source. Protection shall be provided to prevent battery damage by over-charging or over-heating.

2.32.2 **Low-Tier:** A single unit battery charger shall be available and priced separately on the price pages. The charger shall recharge a completely discharged battery within 14 hours; thereafter a low (trickle) charge rate shall be available. The charger shall be UL approved and operate from a 120-volt A.C., 60 Hz power source. Protection shall be provided to prevent battery damage by over-charging or over-heating.

2.33 Mobile Radio Converter Console and Charger (High-Tier Model Only):

2.33.1 **Availability**: There should be available, as an extra option, a mobile charger/converter console. The charger/converter console shall conform to the following criteria:

1. The vehicular chargers shall accept both VHF, UHF, 700/800 portables.

2. Circuitry shall be incorporated in the charger which will prevent over charging the battery if it is left on charge indefinitely.

3. The unit shall completely recharge either low or high capacity batteries in three hours or less.

4. A temperature sensing logic circuit shall be provided that prevents charging a battery that is too hot or cold for reliable safe charging.

5. When the portable is in the vehicular charger, the battery shall be electrically disconnected and the portable shall be powered from the vehicle battery. Operation of the portable in the charger shall not drain or prevent the portable battery from charging. It shall be possible to use the portable in the charger even if its battery is dead.

6. Audio power amplifier and charger circuitry shall be turned on by insertion of the portable in the charger and turned off by removal of the portable from the charger.

7. The charger/converter shall provide the vehicle enclosure for the radio and shall provide for the following items:

- Connects the radio to the external antenna.
- Connects the radio to the vehicle microphone.
- Connects the radio to the vehicle audio amplifier and speaker.
- Connects the radio to the charging circuit.

2.33.2 A key locking assembly shall be furnished to provide for locking the radio in the charger unit. The charger/converter mounting shall meet applicable federal safety standards for automotive accessories. A red LED "Transmit" indicator.

2.33.3 Accessories - Each charger/converter shall include the following accessories: • Microphone with coiled cord and connector.

- A 12 watt amplifier and speaker.
- Mounting brackets and hardware to mount the charger and its accessories.
- If a special calibrator is required to adjust the chargers, one shall be furnished.
- Special 12 watt speaker volume control or pad. Each 12 watt speaker amplifier, or the vehicle charger, shall incorporate a variable pad or volume control to allow for

presetting the portable volume control to a normal listening level, and then when the portable is inserted into the vehicular charger, the volume level will be correct for vehicular use without further adjustment.

2.33.4 Power Requirements: The charger/converter shall be designed to operate from a normal 12 volt negative ground automotive electrical system. The reference voltage shall be established at 13.6 volts DC.

2.33.5 Mechanical Adjustment: The vehicular charger shall be mechanically adjusted by the factory before delivery and shall not require further adjustment by the buyer prior to being placed into service. All mechanical adjustments shall have locking devices to ensure their continued alignment during operation. Proper operation of the vehicular charger includes the unit's ability to lock in and release the portable radio in a smooth and easy manner without binding. All electrical functions of the unit shall be operational with the portable radio properly locked in. The pins contacting the portable radio shall be a heavy-duty type, capable of withstanding multitudinous insertions and removals of the radio from the charger.

2.34 ANALOG & DIGITAL MOTORCYCLE REAR-MOUNT RADIO:

This specification describes low and mid power radios, for motorcycle use. Offerings shall meet the corresponding mobile radio applications.

2.34.1 **Installation:**
The radio unit shall be designed for two-piece rear fender/handlebar control head mounting on Kawasaki, Honda, BMW, or Harley Davidson motorcycles, and shall meet Federal safety requirements.

2.34.2 **Interconnecting Cables:**

2.34.2 (a) All cables and wires shall be furnished to connect the unit to its associated control head and to interconnect the mobile unit with its accessories and the vehicle electrical system. Cables shall be well insulated, waterproofed and equipped with appropriate connectors.

2.34.2 (b) Connectors shall have a screw fastener to mechanically secure the connectors.

2.34.3 **Control Panel:**

The control panel shall be functional, attractive and include all facilities for operating the radio. Controls shall include on-off switch, volume control and squelch disable switch, a red light indicator for transmitter operating, a frequency selection switch for multifrequency requirements, an alpha/numeric channel indicator display, and a Priority Scan enable switch. The control panel shall be weather proof.

2.34.4 **Microphone:**

2.34.4 (a) A military palm-type, noise-canceling microphone shall be supplied as part of the equipment. The microphone shall be a dynamic or magnetic type, and shall include a convenient push-to-talk button for transmitter control. Option helmet (head set) microphones are encouraged to be listed.

2.34.4 (b) The microphone cord shall be a retractable type, with conductors of tinned metallic stranded wire not smaller than AWG size 30. The microphone cord

shall be terminated with a separate screw-on male connector or telephone type modular connector, for mating with the receptacle supplied on the radio.

2.34.5 **Optional Weatherproof Housing:**

2.34.5 (a) Housing shall provide a weatherproof seal to the elements and shall be capable of preventing unauthorized access to the radio by some type of key lock mechanism. Housing should also be capable of supporting an antenna mount.

2.34.5 (b) Weatherproof Housing shall be included as a purchase option of the radio.

2.34.6 **Power Supply:**

2.34.6 (a) The power supply shall be designed to operate from a normal 12 volt negative ground motorcycle electrical system. The reference voltage shall be established at 13.6 VDC. DC input to the radio shall be adequately filtered to exclude all alternator noise.

2.34.6 (b) The power supply, and associated transmitter and receiver, shall be designed so that no degradation shall result (except for a 3 dB loss in transmitter power) in the receiver audio output, squelch sensitivity and SINAD sensitivity if the power supply voltage is varied +/-10% from 13.6 VDC.

2.34.6 (c) The power supply, transmitter, and receiver shall be adequately protected by replaceable type fuses or circuit breakers.

2.35 FIXED LINK BASE RADIOS

The following items are system specifications and shall be determined on a per channel basis, as appropriate, for two link transceivers and associated equipment.

2.35.1 **Power Requirements**

Each low power transceiver shall operate from a negative ground +12.6 volt supply. The transmitter current drain shall be adjustable to less than 1.0 amps when transmitting (at reduced power). The complete transceiver shall operate in an idle condition with a current draw of:

2.35.1 (a) Category 1- Less than 150 ma.

2.35.1 (b) Category 2- Greater than 150 ma., but less than 800 ma

2.35.2 **Environmental**

The transceivers shall operate and meet the specifications herein set forth over an ambient temperature range of 0 to +50 degrees Celsius, with a maximum humidity of 95% at altitudes from sea level to 10,000 feet. The equipment shall remain operational over an ambient temperature range of -20 to +55 degrees Celsius.

2.36 Duplexer, BP & BP/BR

The vendor shall list an optional duplexer. A duplexer, pre-tuned to the frequencies specified in the purchase order, shall be available with each link transceiver. It shall be included as a separate priced unit for each transceiver package. Both Pass and Band Pass / Band Reject duplexers should be offered.

- Insertion Loss shall be 1.5 dB maximum

- Connectors - Type N Female

2.36.1 **Option A -** UHF Option shall satisfy the following requirements

- Transmitter Noise Suppression an Receive Frequency / 75 dB
- Receiver isolation at Transmitter Frequency / 75 dB

2.36.2 **Option B -** 700-800 MHz Option shall satisfy the following requirements

- Transmitter Noise Suppression an Receive Frequency / 65 dB
- Receiver isolation at Transmitter Frequency / 65 dB

2.37 Re-Radiation Loss

The vendor shall list an optional isolator with no more than 0.5 dB total insertion loss and shall be capable of dissipating at least 10 watt of reflected power. Re-radiation of intermodulation products shall be no greater than -50 dBm from the duplexer antenna port when a spurious signal within the duplexer's pass band arrives at that port at 0 dBm (EMR model numbers 7540/2 / 7640/2 or equal). It shall be included as part of each transceiver package as a separate unit.

2.38 Common Circuitry

The transceiver shall be made with removable modular card construction and fit in a standard 19-inch rack mount. The transceiver shall have interfacing circuitry that provides a common point for external control (PTT, COR, power, and 600 Ohm audio connections) to the transmitter and receiver.

2.39 Audio Requirements

The transceiver shall have a 600 ohm balanced 4-wire audio interface. Transmitter and Receiver audio levels shall be adjustable from 16 to +1 dBm. The overall frequency response of the link (end to end) shall exceed a 3002 grade line with type C2 conditioning and be capable of passing industry standard function tones.

2.40 Physical Size/Form Factor

The physical size of the transceiver shall be such that it will fit in a 19-inch equipment rack (width) while not occupying more than 4 rack units (7 inches) vertically. The unit's depth shall not exceed 15 inches. The transceiver should be modular with individual modules plugging into the backplane via a card edge connector.

2.41 Transmitter Characteristics

The transmitter shall meet or exceed the following minimum specifications:

2.41.1 **Carrier Power Output**

- Category 1 / 6 watt minimum VHF, UHF, 3W minimum 700/800 MHz.
- Category 2 / 12 watt minimum VHF, UHF, 700/800 MHz

2.41.2 Spurious and Harmonic Emission Attenuation / 70 dB below carrier

2.41.3 Audio Frequency Total Harmonic Distortion / 5% maximum

2.41.4 Key-Up Time to Full Output / 40 milliseconds, maximum

2.42 Receiver Characteristics

2.42.1 Spurious Response Rejection (Attenuation) / 90 dB Minimum

2.42.2 Intermodulation Spurious Rejection (Attenuation) / 75 dB Minimum

2.42.3 Adjacent Channel Selectivity / - 45dB (12.5KHz)

2.42.4 Audio Output / -16 dBm to +1 dBm (600 Ohms).

2.42.5 Buffered discriminator output

2.42.6 External Mute - The receiver shall have an external mute input which while actively prevent any audio signal from passing through the 600 Ohm receive output port.

2.43 LOW POWER VEHICULAR REPEATERS EQUIPMENT

This specification describes VHF, UHF, and 700/800 MHz in-vehicle mounted repeater, for attachment to the vehicle's mobile radio and used to extending the range of the user's portable radio.

2.44 MULTI-BAND RADIOS

This section describes radios capable of operating in multiple public safety radio bands. For the purposes of this contract the 700 MHz and 800 MHz bands are considered a single band. Specifically, these radios are capable of operating in any two or more of the VHF, UHF, or the 700/800 MHz bands. Otherwise specifications are controlled by the class and tier of the offered product.

2.45 ANALOG & DIGITAL BASE/MOBILE RELAY STATION FIXED RADIO EQUIPMENT

Model Specifications

2.45.1 **Basic Operations**

The following specification describes, VHF High-band, UHF, 700 MHz, and 800 MHz continuous duty, mobile relay/base station equipment using phase, frequency, or digital modulation. Must be FCC type accepted to meet the modulation mask described in FCC Part 90.210.d. Trunked stations must meet the APCO 16, P25, or Open Sky system requirements. All 700 MHz stations shall be capable of P25 operation. Stations shall be capable of the following three modes of operation:

- Mode 1 - The station operates as a mobile relay only
- Mode 2 - The station operates as a tone and/or E&M remote controlled base station and mobile relay
- Mode 3 - The station operates as a tone and/or E&M remote controlled simplex or duplex base station

Digitally trunked base/repeaters shall be of the same model line as the conventional radios.

2.46 Electrical Specification:

The equipment shall be designed to operate from a primary power source of 117 volts AC, 60 Hz. Adequate overload protection shall be provided. All power supplies shall use only high-quality, long-life, solid-state components as active devices. The equipment shall also be capable of operating from an external DC power source.

2.47 Transmitter Characteristics:

2.47.1 The transmitter shall use solid-state components throughout. The use of vacuum tubes in any stage is not acceptable.

2.47.2 Each station offered shall be capable of normal, continuous duty operation.

2.47.3 The transmitter shall be supplied for single frequency operation at any frequency within the VHF, UHF, 700 MHz (745-805 MHz) or 806-869 MHz bands. An alternate option for two or more frequency stations shall also be an option. The transmitter shall be factory aligned to the frequency specified in the purchase order.

2.47.4 Transmitter Standards:

- Carrier Power Output Rating:

  High-Tier 40-100 watts, continuous duty.

- Conducted and Radiated Spurious Emissions:

  High-Tier / -85 dB (12.5 kHz)

  Mid-Tier / -70 dB (12.5 kHz)

- Audio Frequency Harmonic Distortion:

  High-Tier / All Bands: 2% Max.

  Mid-Tier / 3% maximum

- FM Hum and Noise Level: High-Tier / -45 dB (12.5 kHz)

  Mid-Tier / -34 dB (12.5 kHz)

2.47.5 **Reradiated Loss:**

Re-radiation of intermodulation products shall be at least -50 dBm VHF (-30dBm) all other bands) from the transmitter antenna port or at the external isolator output port (if provided) when a spurious signal arrives at the port at 0 dBm. Any isolators used to accomplish this, shall be capable of dissipating at least 50 watts of

2.48 Receiver Characteristics:

The receiver shall be completely solid-state, utilizing only high-quality, long-life, solid-state components as active devices. The receiver shall be rated for continuous operation.

2.48.1 **Receiver General Characteristics:**

- Adjacent Channel Selectivity: High-Tier / -75 dB at 12.5 KHz

  Mid-Tier / -60 dB at 12.5 KHz

- Spurious Response Attenuation: High-Tier / -95 dB at 12.5 KHz

  Mid-Tier / -70 dB at 12.5 KHz

- Intermodulation Spurious Attenuation:

  High-Tier / -80 dB at 12.5 KHz

  Mid-Tier / -70 dB at 12.5 KHz

2.48.2 **Carrier Operated Relay:**

A carrier operated relay (COR) shall be provided. Upon receipt of an on-frequency RF carrier signal and the required squelch activating sub-audible tone, this relay shall provide closure of a pair of normally open dry relay contacts.

2.48.3 **Mobile Relay Operation:**

The receiver repeat audio shall be connected to the transmitter modulator input through a gain control to permit independent adjustment of transmitter modulation level. The repeat level shall be independent of line input/output levels. A carrier control timer shall be provided. This will limit the duration of any continuous mobile relay transmission to a pre-selected interval of from 30 seconds to 5 minutes.

2.49 Station Control and Operation:

2.49.1 **Station Audio Control:**

The station shall be designed to accept two-line, 4-wire audio; 0 dB in/0 dB out.

2.49.2 **Tone Control Scheme:**

The base station shall be controlled by in-band tones for the remote controlled transmit function and the repeater enable/disable function.

2.49.2 (a) **Transmit Tone Control:**

- Transmit tone control shall be by tone intervals of the following sequence:

  A = Guard Tone (2175 Hz) for 125 msec. nominal

  B = Transmit Tone (1950 Hz; 10 dB down from (A) for 40 msec. nominal

  C = Low Level Guard Tone (2175 Hz for the duration of the message; 30 dB down from A)

- The "B" function tone shall activate the transmit function of a single frequency base station with the "C" tone continuing throughout the message.
- The station decoders shall not respond (false) to voice peaks up to test tone levels or noise up to -10 dBm.
- The tone decoder overload (talk-down level for voice peaks shall be greater than the test tone level; the overload level for noise shall be such that overload does not occur with levels as high as 10 dB below test tone.

2.49.2 (b) **Tone Squelch Disable:**

The receiver sub-audible tone squelch unit shall be disabled by the short tone sequence indicated below:

A= Guard Tone (2175 Hz) for 125 msec. nominal

B= CTCSS Disable Tone (2050 Hz); 10 dB down from (A) for 40 msec. nominal

2.49.3 **Repeater Enable/Disable Function:**

The mobile function of the station shall be enabled and disabled by the tone sequence indicated below:

A= Guard Tone (2175 Hz) for 125 msec. is nominal

B= Function Tones (10 dB down from A, 1550 Hz for enable, 1440 Hz for disable) for 40 msec. nominal

2.49.4 **E&M / DC Control**

The station shall provide a contact point, which when grounded, will key the station and allow the transmission of line audio. When the station is keyed by grounding the contact point, the remote control function shall have priority over the repeater function. Also, tone remote keying shall have priority over DC contact keying.

2.49.5 **Microphone and Speaker**

A palm-type microphone with push-to-talk switch and hang-up bracket shall be supplied with each unit for local control. A permanent magnet loud speaker with volume control shall also be supplied. The volume to the monitoring speaker shall be independent of the transmitter repeat and line output levels. The local PTT and microphone audio functions shall override repeater or line PTT and audio.

2.50 Optional Duplexer:

For the UHF & 800 MHz stations only, an optional duplexer, pre-tuned to the frequencies specified in the purchase order, shall be considered separately. It shall be capable of being mounted horizontally in a standard 19" rack. Models determined to meet the requirements of this section include the EMR 65534/ENC, SBC-2 for UHF, and the Celwave PD898 for 800 MHz, or approved equivalents. Because of random Tx/Rx frequency splits, VHF duplexing equipment is not a requirement of this RFP.

2.50.1 Frequency Separation: UHF MHz: 5 MHz minimum
700 MHz: 30 MHz minimum
800 MHz: 45 MHz minimum

2.50.2 Maximum Power Input: (Continuous duty) / 100 Watts

2.50.3 Insertion Loss:

UHF: at 5.0MHz Separation: 1.0dB Max.

700 MHz: at 30 MHz Separation: 1.0 dB Max.

800 MHz: at 45 MHz Separation: 1.0 dB Max.

2.50.4 Transmitter Noise Suppression at Receive Frequency:

UHF: : 75 dB minimum

700/800 MHz: 65 dB minimum

2.50.5 Receiver Isolation at Transmit Frequency:

UHF: : 75 dB minimum

700/800 MHz: 65 dB minimum

2.50.6 Maximum VSWR: 1.5:1 or less; both bands

2.50.7 Connectors: Type N Female or 7/16 DIN

2.51 General Electrical and Mechanical Characteristics:

2.51.1 Basic Components:

- The radio equipment shall be installed in a standard, indoor cabinet enclosure, or an optional heavy-duty, aluminum, 19-inch, open relay rack of a nominal 90-inch height, meeting EIA Standard RS310C (Harris -Dracon 46055-005 or approved equivalent). All station chassis shall be mounted near the middle of the rack. The maximum height of the mobile relay/base station equipment shall be 37 inches.
- All RF input/output connectors on major station assemblies shall be Type N, BNC, or TNC, or some other approved locking RF connector.

2.51.2 Special Tools:

One complete set of any specialized hand tools shall be provided with each base/mobile relay station ordered. Tools shall include all necessary tuning tools, cables, card and/or module extenders, etc., to locate defective parts, trace equipment malfunctions, and perform routine maintenance.

2.51.3 Service Meters:

Panel mounted meters with associated selector switches or similar means may be optional with all units to measure all transmitter and receiver circuits essential to tuning and servicing. Such meters or fixtures shall be separately priced. If a computer interface is required for routine maintenance, the software shall be provided.

2.51.4 Wiring:

Wiring shall be color coded or marked in an acceptable manner for ease of maintenance. All inter-chassis wiring shall be clamped, laced or tied to prevent undue mechanical strain on connectors and terminals. When subjected to an open flame, hot soldering iron, or short circuit, the wire used in this equipment shall not support combustion for more than five seconds after the heat source is removed.

2.52 COMMUNICATION SERVICE MONITORS

These specifications describe a Communications Service Monitors for use in the maintenance of public safety land mobile radio communications system. These systems will be primarily conventional narrowband FM, conventional P25, trunked P25 or Astro 25 systems.

2.52.1 **Physical Construction**:

The complete monitor, including any and all modules, shall be contained in the mainframe. All switches, controls, inputs and outputs normally used during operation should be accessible from the front of the instrument. The mainframe cabinet shall be provided with a cover to protect the controls and oscilloscope from damage. The monitor shall operate over a temperature range of 0 to 40 degrees Celsius and weigh less than 35 pounds, including all plug-in modules and batteries.

2.52.2 **Electrical Specifications:**

The monitor shall be all solid-state. The monitor shall be capable of accepting operating power from one of two sources. No internal modifications or adjustments shall be required by the operator to change from one power source to another.

2.52.2 (a) A.C. Power / 120 VAC, 60 Hz; the unit shall be supplied with a 6-foot grounding power cord.

2.52.2 (b) D.C. Power / 12 VDC to 15 VDC; the unit shall be supplied with the required connector to supply D.C. power to the monitor for specific classifications.

2.52.3 **Service Monitor Operating Sections:**

The following functions shall be provided by the monitor, as defined by instrument class:

- R.F. Signal Generator
- R.F. Receiver
- Duplex R.F. Signal Generator
- General Purpose Oscilloscope
- R.F. Spectrum Analyzer
- Tracking Generator
- High Stability Oscillator (0.01 ppm - 0.1 ppm)
- Frequency Counter
- Power Meter
- Audio Generator
- Distortion Meter
- General Purpose Oscilloscope

2.52.4 Signal Generator - Signal output(s) shall be provided to allow servicing and alignment of FM communications receivers.

2.52.5 Frequency Generation - Continuous from 1 MHz to 1000 MHz .

2.52.6 Output Level - 0.1 microvolt to 20 millivolts

2.52.7 Output Level Accuracy: <+/- 2Db

2.52.8 Time Base Aging and Stability: 1.0 PPM/year after the first month

2.52.9 Frequency Step Resolution: 10 Hz or better

2.52.10 Modulation: AM & FM

2.52.11 Audio Generator: 1 KHz fixed, & variable frequency tone

2.53 Receiver Monitor/Display:

The receiver/monitor shall display demodulated signals on the LCD display/meter and allow audible monitoring via a self-contained speaker.

2.53.1 Frequency Range & Accuracy: Same as for Signal Generator

2.53.2 Input Sensitivity: 2 microvolt maximum for 10 dB SINAD

2.53.3 Input Impedance: 50 ohm, nominal

2.53.4 Deviation Measurement Range: <+/- 2.0 KHz to >+/- 10 KHz peak for full scale display

2.53.5 Deviation Measurement Accuracy: +/- 5%

2.53.6 Demodulated Output Distortion: < 10%

2.53.7 Frequency Meter Error Resolution: 1 Hz/10 sec. gate time

2.54 Oscilloscope

The receiver LCD display should be made available for use as a general purpose oscilloscope to 50 KHz or 500 KHz, depending upon classification/model.

2.55 Spectrum Analyzer

2.55.1 Frequency Range: 400 KHz to 1000 MHz

2.55.2 Dynamic Range: -90 dBm to -30 dBm

2.55.3 Display Range: >70 dB calibrated in dBm

2.55.4 Horizontal Display Calibration: Shall have selectable per-division sweep calibration.

2.55.5 Calibration: A reference signal should be available from the instrument to be used for level calibration.

2.56 Duplex RF Signal Generator

2.56.1 Offset Frequency Range: +/- 10 KHz to +/- 45 MHz

2.56.2 Output Level: >100 microvolt

2.57 Accessories

The monitor shall be provided with a whip antenna designed to make off-the-air measurements, an output cable assembly, and a service manual.

2.58 Operational Considerations

It is the intent of these specifications to buy a dependable communications service monitor to service government-owned communications equipment. The monitor must be ruggedly constructed to withstand severe vibration and shock encountered during travel to remote transmitter sites.

The instrument will be used daily and must be a reliable standard under the specified extremes of temperature and other conditions experienced during routine service procedures. The monitor shall be portable and completely self-contained. The service monitor shall be so constructed and labeled for easy use. Protection should be provided to minimize damage to the instrument by an inadvertent keying of a transmitter into the generator output(s). The generator's output(s) shall withstand a minimum of 100 watts for up to 30 seconds.

2.59 Configurations

Three configurations of monitors shall be proposed separately, depending upon option level and vendor product line. These shall include the following:

2.59.1 Maximum Feature Test Set with Extended Range Duplex Signal Generator (no offset limit within 1-1000 MHz range), Spectrum Analyzer with full span (1-1000 MHz) sweep, Tracking Generator, High Stability Oscillator, & Computer control interface. Must list options required to meet specifications. It requires P25 digital trunking, Smartnet trunking capability. Options may include extended RF range, automatic test and tuning software, additional digital modes including LTE, BER testing (List all trunking modes and other additional options as offered by vendor.)

2.59.2 Full Feature Portable Service Monitor with Duplex Signal Generator (1000 MHz), Spectrum Analyzer (1000 MHz), Tracking Generator (1000 MHz), and High Stability Oscillator (0.5 ppm), with internal Battery Power (List trunking and other additional options as offered by vendor). Units determined to meet the intent of this specification include the Freedom 8000 series and Aeroflex 8800 series.

2.60 GENERAL SPECIFICATIONS:

2.60.1 Non-Proprietary Specifications

2.60.1 (a) These specifications describe electronic radio equipment to be used in various Arizona State, VHF High-band, UHF 450 MHz and 700- 800 MHz (Conventional and Trunked) radio communications systems. This document will describe separately, the requirements for fifteen (15) different classes of electronic equipment.

2.60.1 (b) Only the VHF (150-174 MHz) model in all radio lines will be evaluated on technical specifications. If a VHF conventional product qualifies for an award in a product line, then the vendor may add their conventional UHF Band, and qualification of a conventional 800 MHz product will allow a 700 MHz product in the same radio line to be added to the contract, providing the discount percentage is the same as for the VHF or 800 MHz model.

2.60.1 (c) The specifications do not include any proprietary items, components, circuits, or devices which would preclude any communications equipment manufacturer from producing equipment to meet these specifications. All technical tolerances, ratings, power outputs, or any technically specified criteria contained within these specifications are considered to be within the current state of the art and are currently being met by commercially available electronic equipment. The fact that a manufacturer chooses not to produce equipment to meet these specifications is not sufficient cause to adjudge these specifications as restrictive.

2.61 CONTRACTOR SUPPORT (Installation and Maintenance):

2.61.1 Instruction Books, User Guide and Product Literature

The contractor will make available the following equipment documentation to purchasers in any quantity specified by the purchaser over and above the quantity required to be included with the unit price. Manuals will accompany the equipment at time of delivery or may be delivered prior to equipment delivery.

- OPERATORS MANUAL One (1) operators manual will be furnished with each equipment unit. This manual will provide an operational description of the equipment and all other pertinent operational details. This manual must include illustrations or photographs displaying the location and details of the various devices and controls. This manual will be a volume separate from all other manuals.
- INSTALLATION MANUAL the installation manual will consist of printed and illustrated sections that describe the mechanical, electrical and electronic details of assembly sufficient to assure proper operation at completion. This manual may be a section of the service manual. Installation manuals **will be included** with each lot of purchase for example: a) one (1) manual for each base/repeater unit b) one (1) manual for each of the mobile or portable radio units, up to a maximum of ten (10) manuals for each lot of mobile or portable radios. The purchaser will specify additional manuals required with each purchase.
- SERVICE MANUAL The service manual must contain circuit descriptions in verbal and illustrative form which are concise and all inclusive. Sections of the manual will include theory of operation to the component level, parts lists, troubleshooting flow diagrams and charts, instructions for alignment programming, adjustment and/or setup, schematics with normal operating voltages, plus wiring, interface, interconnection and printed circuit layout and assembly diagrams. Also included will be a list of maintenance and test equipment required for equipment maintenance prescribing make, model, description, manufacturer and alternatives. Service

manuals will be included with each lot of purchase in the same manner as described above for the installation manual. The purchaser will specify additional manuals required with each purchase.

2.61.2 Warrantee (additional requirements):

It Contractors shall warrantee all equipment for one (1) year following the equipment's Acceptance.

2.61.3 Parts Support:

All equipment covered by these specifications and any resultant contracts will have a minimum service life of seven (7) years from date of delivery to the purchaser and the contractor will guarantee replacement parts stocking by the contractor and/or authorized distributor for this service life period.

2.62 WORKMANSHIP

All the various types of equipment supplied under this Contract shall be of the latest, most improved model, past the development state and in factory production. Such equipment shall have a satisfactory production performance record as evidenced by product literature supplied by the Contractor and as determined by the State. Equipment without performance data will be subject to a technical evaluation for acceptability. If requested, Contractor shall supply a sample unit to the State within ten (10) days of the request. The sample unit will be returned within sixty (60) days. Components used in the equipment shall be only those specified in Contractor's equipment literature. Contractor shall provide a name and telephone number list of users/agencies that have purchased and installed the proposed equipment for the State's use during the evaluation process.

2.63 PROGRAMMING

Each model of radio shall have a Radio Programming Device available if one is required to program the radio. This software shall be for the highest level and revision of software available, including all maintenance software. The vendor shall agree that purchase of a single software package constitutes a "user" license per-site and may make necessary copies for internal use as required at a site. The vendor shall also offer at a reasonable additional cost, a "system" license for use at up to 10 agency service shops.

3.0 Digital Microwave Terminals

3.1.1 Offer(s) shall be the manufacturer or distributers of the products requested and specified;

3.1.2 Standards and specifications from the following shall be used unless otherwise specified;

3.1.3 Federal Communications Commission (FCC) Title 47 Parts 2, 15, and 101 as applicable;

3.1.4 Bellcore Technical References;

3.1.5 International Telecommunications Union – Telecommunications Standardization Sector (ITU-T), formerly know as CCITT;

3.1.6 International Telecommunications Union Radio Communication Sector (ITU-R), formerly known as CCIR;

3.1.7 Institute of Electrical and Electronic Engineers (IEEE);

3.1.8 MIL-HDBK-217, Reliability Prediction of Electronic Equipment;

3.1.9 Underwirters laboratory (UL);

3.1.10 American National Standards Institute (ANSI);

3.1.11 Electronic Industries Association (EIA);

3.1.12 Telecommunications Industries Association (TIA);

3.1.13 In case of conflicting requirements of standards, they apply in the sequence in which they are listed above. The complete apparatus shall also comply with the applicable codes, laws, and regulations of all governmental agencies having jurisdiction.

3.2 General Requirements

3.2.1 Equipment to be furnished complete:

3.2.1 (a) When requested a fully functional assembly with standard industry interfaces for the signal payload, power connections, alarm I/O connections and any required data or service channel interfaces. All other accessories would be priced separately in the vendors catalogs at a discount off listed price and in as much as these materials may be provided by the purchaser or already exist.

3.2.1 (b) Equipment supplied under this contract shall be new and provided with the latest hardware and software revisions currently being shipped. The Contractor shall notify the Purchaser when any hardware or software revision is incompatible with previously shipped equipment. The Contractor shall identify the incompatibility and shall provide a method to resolve the incompatibility.

3.2.1 (c) Equipment supplied under this contract shall be standard production, identified by model numbers as listed in supplier's catalogs and price pages. All equipment supplied under this contract shall be in full production status. Equipment still in testing phases shall not be accepted.

3.2.2 Instruction Manuals - A complete, comprehensive set of instructions, block diagrams, and operating manuals shall be furnished for each piece of equipment supplied. Manuals shall be provided in the form of printed copy and available on CD Rom at no cost. The intent is for documentation at a level sufficient for maintenance to the lowest replaceable unit. Each instruction manuals shall contain the following as a minimum:

3.2.2 (a) Complete block diagrams including information outlining method of operation, supply voltages, etc. for all equipment.

3.2.2 (b) Circuit diagrams showing internal interconnect wiring of all equipment.

3.2.2 (c) Complete instructions covering operation, theory of operation, and maintenance of all equipment and accessories.

3.2.2 (d) Servicing manuals, instructions, and procedures shall be of sufficient detail in order to perform detailed maintenance down to the sub-assembly level.

3.2.2 (e) Diagrams showing inter-equipment wiring and cabling including terminal block connections.

3.2.2 (f) Normal point-to-point operating voltages, current, and power levels for test and adjustment purposes.

3.2.2 (g) Detailed installation instructions.

3.2.2 (h) Detailed list of all replacement spare parts.

3.2.2 (i) Block and level diagrams.

3.3 As-Built Drawings

Two sets of as-built drawings for the whole system plus one set for each site shall be supplied to the Purchaser indicating the location of the equipment, exterior equipment wiring, cabling, block and level diagrams, and any other details that are either different or omitted from the instruction books supplied. If only equipment has been ordered and not a complete system, the as-built drawings shall show the equipment interconnection details and specific frequencies for each piece of equipment.

3.4 Contractor's Guarantee

Contractor guarantees that the equipment furnished under the contract meets all of the requirements contained within this specification. Product shall meet or exceeds the manufacturers published performance specifications, as well as all equipment furnished shall fully meet all applicable Federal Communications Commission (FCC) rules and Electronic Industries Association (EIA) specifications.

3.5 Warranty Service and Maintenance Contracts

Contractor shall repair or replace without charge to the Purchaser, any equipment or part that which fails in operation during normal use within 24 months from the date of receipt of the equipment. This shall not apply to failures caused by acts of God or extraordinary circumstances beyond the control of the Contractor.

3.5.1 Contractor shall support the following:

- 3.5.1 (a) maintenance
- 3.5.1 (b) servicing
- 3.5.1 (c) removal and replacement of defective parts
- 3.5.1 (d) adjustments and measurements

3.5.2 In order to maintain the equipment supplied under this contract to the manufacturer's specifications and requirements of the FCC for a period of 2 years from the date of the receipt of the equipment. This shall be at no additional cost for those services requested for malfunctions reported during a normal working day. A normal working day is considered to be Monday through Friday, 0800 to 1700 hours, holidays excepted.

3.5.3 Contractor shall have a technician (at a fee) that has been trained and is competent to maintain the supplied equipment on 24-hour call at all times. Phone numbers and addresses shall be provided of the people to contact in an emergency. If the Purchaser elects to maintain the equipment themselves, the Contractor shall provide 24- hour call-in technical support 7 days a week. Contractor shall provide at time and expense price list for onsite maintenance services which may be purchased on an as needed basis.

3.5.4 When a malfunction is reported and service is requested, the Contractor's technician shall be able to provide technical support within 60 minutes after the Contractor or their representative was notified by the Purchaser.

3.5.5 Contractor shall provide the names of the persons who shall be the primary contact point for service, complaints, and general inquiries. Their names, addresses, and telephone numbers shall be submitted in Section 3 Personnel section.

3.5.6 Contractor shall quote when requested, charges for malfunctions reported, service requested, and maintenance performed as follows:

- 3.5.6 (a) After 1700 and before 2400 hours, Monday through Friday.
- 3.5.6 (b) After 2400 and before 0800 hours, Monday through Friday.
- 3.5.6 (c) Saturday, Sunday, and holidays.

3.5.7 Equipment or part replaced under the provisions of this warranty becomes the property of the Contractor. If the Contractor desires the defective equipment or part returned all

transportation charges shall be the responsibility of the Contractor. If the Contractor does not specifically request return of such replaced parts within the 30 days from date of replacement, the equipment or parts become property of the Purchaser. Contractor shall provide repair and return service for two years at no charge.

3.5.8 Replacement parts shall be regularly stocked by the Contractor and/or authorized distributor. Delay in the Purchaser's receipt of replacement parts shall not exceed ten calendar days from Contractor's or distributor's receipt of order.

3.5.9 Contractor shall guarantee deliver of emergency orders within 48 hours from receipt of order. Emergency orders shall be transported by the most expedient manner available with the transportation cost borne by the Purchaser less normal shipping cost.

3.6 Failure to Meet Requirements of Specifications

3.6.1 Should any of the inspections, tests, or operation of the equipment under service conditions show that the system or equipment does not meet the requirements of the specifications, the Purchaser shall reject the equipment and direct the Contractor to immediately furnish such new equipment or parts thereof, as may be necessary to bring it up to the requirements of the specifications.

3.6.2 Material and equipment furnished shall be subject to approval by the Purchaser(s), including engineers selected to review the products with regard to design, operation, performance and requirements of this specification. The acceptance of equipment or parts thereof shall in no way relieve the vendor of responsibility for furnishing equipment that meets this specification in all detail.

3.7 Detailed Specifications of Equipment

3.7.1 Contractor shall submit a complete description of the operation of the quoted equipment when requested. The description shall include detailed specifications, photographs, panel layouts with labeled controls, model numbers, and, in general, show all phases of the quoted equipment. These specifications must be complete and cover in detail all requirements set forth herein. Any deviation from these specifications shall be fully explained. No quote shall be considered that does not fulfill these requirements.

3.7.2 Differences may exist in physical arrangements and mechanical construction of standard products of various manufacturers. However, the requirements as stated in this section describe a state-of-the-art microwave radio system concept as related to the operation, expansion, maintenance, and requirements. Equipment offered that does not meet these requirements must have a detailed statement of where deviations exist. A description describing exactly how the equipment differs and the reasons the equipment is equivalent to the requirements of the specification.

3.8 Maintenance and Test Equipment List

3.8.1 Contractor shall if provide when requested, a list of recommended spare parts and test equipment deemed necessary to maintain the equipment.

3.9 Material and Workmanship

3.9.1 Material and workmanship shall conform as specified to the latest standardizing bodies as the IEEE, EIA, NEMA, NEC, FCC, etc. Applicable EIA standards shall be fully met, including all panel and equipment mounting rails, except as required by special circumstances. All material shall be free from defects, corrosion, and scratches.

3.10 Test Procedures

3.10.1 Test procedures shall be conducted as outlined in the EIA standards and IEEE specifications.

3.11 Identification

3.11.1 Operational controls and adjustments, plug-in-cards, sockets, and terminal strips shall have suitable nameplates or stamps for the identification of function or purpose. All cables, plugs, and sockets shall be marked to provide correct mating.

3.12 Servicing

3.12.1 Units shall be readily available for routine servicing. If module or card extenders are required for servicing, then one of each required type shall be furnished.

3.13 Factory Testing

3.13.1 Each unit and assembly shall undergo extensive testing prior to shipment from the factory. These tests shall encompass all aspects and functions of the equipment from the component to the unit entirety. Each delivered unit shall be accompanied by a printed record of the dynamic functional test results for that particular unit.

3.13.2 Equipment purchased shall be system tested at the factory prior to shipment to insure proper operation, alignment, and compatibility.

3.13.3 Contractor shall allow the Purchaser to witness the factory testing. The Contractor shall notify the Purchaser a minimum of 30 days prior to factory testing to allow the Purchaser to make travel arrangements. The Purchaser has the right to decline. Equipment purchased under this contract shall have a minimum service life of 10 years from the date of delivery to the Purchaser. Contractor shall maintain replacement parts for this service period. Should parts or equipment purchased becomes nonfunctional within the 10-year service life period; the Contractor shall find approved replacement equipment or new equipment to the Purchaser for the same price as the original equipment.

3.14 Training

3.14.1 Contractor shall provide training to the Purchaser's personnel in the operation of all of the equipment supplied under this contract. The training shall be supplied at the Contractor's training facility and shall be provided at no cost based on the amount equipment purchased as follows:

3.14.1 (a) 1 to 2 hops of equipment Purchaser pays full cost of training class.

3.14.1 (b) 3 to 5 hops of equipment Contractor provides one seat of training at no cost.

3.14.1 (c) 5 to 7 hops of equipment Contractor provides two seats of training at no cost.

3.14.1 (d) 8 and above Contractor provides three seats of training at no cost plus one additional seat at no cost for every two hops above 11 hops.

3.14.2 In all cases, the Purchaser shall be responsible for travel, lodging, and per diem costs for the people they send to training.

3.14.3 Contractor shall provide technical training in the operation of all of the user equipment supplied. This training shall include:

3.14.3 (a) Training in the operation of the equipment and basic troubleshooting techniques. This may include basic board replacement repair where appropriate.

3.14.3 (b) The Contractor shall provide factory training in the repair and maintenance of the equipment as applicable. This training shall be at the technician level and shall detail the maintenance, operation, level setting, and repair of any electronic equipment being provided.

3.14.4 Contractor shall set forth the cost for optional additional hours of training and for any optional or additional factory or field classes available.

3.14.5 Contractor shall coordinate any training schedule with the Purchaser 45 days prior to starting any training. The Contractor shall provide a training compendium at that time for Purchaser approval.

3.15 System Options

3.15.1 Options listed below shall be provided if requested by the State. The prices for these options are to be quoted in single unit quantities. The Purchaser may order any of the following features without any requirement to order any other option. All optional equipment shall meet the requirements of this specification as applicable.

3.15.2 Frequency coordination services as required to comply with FCC rules and licensing instructions. This shall include services required by the FCC at the time the frequency coordination is requested. Provide the cost on a “per-hop” basis.

3.15.3 Field Engineering Work: Provide a quotation for optional field engineering services for the microwave paths. These services shall include but are not limited to:

3.15.3 (a) Path engineering, including coordinating with the frequency coordinator to determine the correct frequency band considering interference as well as the physical characteristics of the path.

3.15.3 (b) Physical inspection of the sites and verification of the microwave paths.

3.15.3 (c) Providing written documentation showing photographs of the sites, site drawings, and equipment installation locations.

3.15.3 (d) Provide the cost on a per-hour basis.

3.15.4 Installation Services: A quotation for optional field installation services for the microwave equipment, antennas, waveguide, and ancillary equipment. Provide this price on an hourly basis.

3.15.5 No DS1 Multiplex: A deduct option shall be provided to remove the DS1 multiplex for all microwave radio equipment with channel capacities of 28 DS1s and above.

3.15.6 Encryption: Provide a quotation for available encryption options for the microwave equipment.

3.16 <u>Non-Frequency Specific Requirements</u>

3.16.1 Equipment is required to comply with these requirements unless specified elsewhere. These specifications apply to three (3) classes of microwave systems: TDM (DS1s/DS3s), Hybrid (supporting both TDM and Packet on their native modes), and Packet only radios.

3.16.2 Component Ratings: Each and every component part of the equipment shall be operated within the manufacturer's continuous commercial-duty rating under any combination of operating conditions specified. Relays and switches shall be hermetically sealed and rated for a minimum of 2 million operations.

3.16.3 Overload Protection: Adequate fuses, circuit breakers, or other electronic devices shall be included to protect the equipment from internal and external faults. In the event these fusing devices are employed in circuits exhibiting false operation and yet protect the equipment from a sustained overload.

3.17 Printed Circuit Connections

3.17.1 Panel-end cable connections are necessary to extend and interconnect the circuits to other module panels, wire cables may be used, but they shall be made with stranded wire and of sufficient gage and secured so as to equal the quality and reliability achieved from the printed circuit inter-module connections within a panel. Solid-wire cables shall not be used where cables shall be flexed.

3.17.2 Electrostatic Protection: The Contractor shall provide electrostatic protection device, one per unit.

3.17.3 Electromagnetic Susceptibility and Spurious Radiation

3.17.4 As a minimum, the equipment shall meet or exceed the spurious radiated signal requirements of FCC Rules, Title 47, Part 15, Subpart J for Class B computing devices.

3.17.5 Microwave equipment supplied under this specification and contract shall be capable of operating normally when located in a rack adjacent to Part 90 LMR base stations, and not less than 3 meters from high-power TV and FM broadcast transmitters.

3.17.6 Equipment when all covers are installed shall operate normally if a portable radio transmitter operating at 5 watts or less in the 136 to 174 MHz band, 4 watts or less in the 450 to 470 MHz band, and 3 watts or less in the 746 to 806 / 806 to 869 MHz band, is keyed not less than 2 meters from the closest point on the equipment.

3.17.7 Should equipment fail to operate properly under the conditions described above in this section, the Contractor shall be responsible for making any repairs or modifications to the equipment supplied at the Contractor's expense. The Purchaser shall be responsible for making sure any non-Contractor-supplied equipment is operating within specification.

3.18 Mechanical Requirements

3.18.1 Indoor mounted equipment shall be supplied in EIA standard, 7-foot or 7 1/2-foot, 19-inch or 23-inch racks. These racks shall be equipped with standard 1-3/4" rack spacing and drilled and tapped for standard 12-24 NF screws. The rack shall be included in the equipment pricing.

3.18.2 RF units and other equipment designed to be mounted outdoors shall be capable of optionally installing the equipment indoors in a standard EIA equipment rack.

3.18.3 Equipment shall be supplied that shall allow for two complete RF and multiplex equipment assemblies to be mounted in the same rack space to allow for a complete hot-standby repeater or hot-standby terminal to be installed in a single rack space.

3.18.4 Outdoor mounted equipment shall be provided in weatherproof housing including a sun shield as an option available to reduce the amount of heating due to solar isolation.

3.18.5 Equipment shall not be susceptible to bit errors, false alarms, or other abnormal operation when subjected to shock and vibration normally anticipated to be received during normal maintenance actions such as pulling and removing circuit cards, replacing covers, or connecting test equipment either in the immediate rack or an adjacent rack.

3.18.6 Parts requiring service or maintenance must be accessible during normal operation. If covers, shields, or assemblies have to be removed for service, special tools other than a screwdriver and pliers shall not be required. The fasteners holding items that are removed during service must be a captive type, designed for frequent use. All chassis shall be designed to be physically and electrically detached conveniently from the rack for replacement or bench service. All inter-chassis and interrack cabling or wiring shall have connectors designed for rapid connection and disconnection. All cable connectors shall have cable clamps.

3.18.7 Wiring and cabling shall be supported such that the weight of the cable or pressure from bending is not transferred to the connector pins, wire-wrap point, or solder connection.

3.18.8 Any piece of equipment or contact area on the equipment that is capable of inflicting an electrical shock or causing mechanical damage to a person working on the equipment shall have protective covers and shall have appropriate warning labels.

3.18.9 No liquid cooling systems shall be allowed as part of this equipment.

3.19 Environmental

3.19.1 Indoor mounted equipment shall operate as specified under the following room ambient environmental conditions:

3.19.1 (a) Operating Temperature -10 degrees C to +50 degrees C

3.19.1 (b) Relative Humidity 5% to 95%, non-condensing at all operating temperatures

3.19.1 (c) Operating Altitude 4,000 meters

3.19.2 Outdoor mounted equipment shall operate as specified under the following outside ambient environmental conditions:

3.19.2 (a) Operating Temperature -30 degrees C to +55 degrees C

3.19.2 (b) Relative Humidity 5% to 95%, non-condensing at all operating temperatures

3.19.2 (c) Operating Altitude 4,000 meters

3.20 Multiplex Equipment

3.20.1 Terminal and repeater equipment shall be supplied with multiplex equipment to convert the signaling speeds and formats internal to the microwave equipment to industry standard interfaces. These interfaces may include DS0/DS1/DS3, OC3/SONET, Ethernet, and MPLS. Support of these interfaces may be by both internal and/or external hardware.

3.20.2 Multiplex equipment shall be provided for the maximum capacity of the radio equipment being provided.

3.20.3 Multiplex equipment shall mount in the same rack as the microwave radio equipment.

3.20.4 Multiplex equipment shall report equipment and transmission alarms and shall provide an interface into the microwave radio alarm system so a single alarm interface is presented to the technician or person using the alarm system.

3.20.5 Multiplexers shall be capable of performing looping back, as appropriate, on any DS-1, DS-3, or OC-3 signal levels.

3.20.6 T1 digital channel banks should be offered with standard audio and data interfaces. Options that enhance the users flexibility are encouraged.

3.21 Alarm and Control

3.21.1 Alarms shall be available for display and metering locally as well as from any other terminal or repeater connected in the system to the same alarm and control system.

3.21.2 System including multiplex shall provide alarm and control capabilities via Simple Network Management Protocol (SNMP). Any applicable private vendor MIB shall be provided to Purchaser upon request without cost to the Purchaser.

3.21.3 Microwave equipment shall be equipped with front panel system status or a small handheld unit with displays and controls. A computer interface port should be provided for access to more detailed information or advanced features. However, all historical alarm events shall be available to the operator through a laptop port.

3.22 DC Power Requirements

3.22.1 Equipment supplied under this contract shall operate as specified with either a positive or negative ground over a voltage range from 21 to 28 VDC and 42 to 56 VDC with a 200 mV (RMS) ripple.

3.22.2 Radio assembly shall contribute no more that 30 mV RMS ripple to the DC bus, assuming a 400 amp-hour (AH) battery with the system bus rating of 100 A.

3.22.3 Radio rack assembly shall be equipped with a DC distribution facility including power bus, ground bus, and fuse or circuit breaker panel. This DC distribution facility shall provide main DC power for all the equipment installed in the rack. The DC distribution facility shall be equipped with an alarm system to provide an alarm contact whenever a fuse or circuit breaker has opened.

3.22.4 Systems shall provide “fail-safe” operation when the input voltages are outside the required operating range above. This means the radios shall not be subjected to damage or random operation. When the voltage returns to the normal operating limits, the

equipment shall restore normal operation without operator or technician intervention or requiring power to be removed to “reset” the equipment.

3.22.5 Radio equipment configured two or more to a rack shall be individually fused. A power supply failure in one radio assembly shall not affect any other path or hop. This includes the repair or replacement of the failed unit.

3.23 Service Channel and Orderwire

3.23.1 Radio terminal or repeater assembly shall be equipped with a minimum of two service channels capable of the following:

3.23.1 (a) One two-wire audio channel with a 600 ohm input.

3.23.1 (b) A data channel that interfaces at the RS-232 level

3.23.2 Service channels shall not decrease the traffic capacity of the system.

3.23.3 Service channels shall automatically be switched when installed in a radio network using a protected configuration (e.g., loop protection, hot-standby).

3.24 Redundancy and Protection

3.24.1 Microwave equipment shall be designed for reliable operation through the use of redundant power supplies and other common equipment.

3.24.2 Alarm condition shall be generated any time any equipment, with the exception of diversity receive, is operating in a protection mode.

3.24.3 Switching times, including maximum manual switching time, for all equipment shall be stated. Maximum bit errors incurred and transmitter failure confirmation time shall also be included.

3.24.4 Equipment shall provide both manual and automatic error free switching, receive only (and does not apply to 18 and 23GHz).

3.24.5 Complete or partial failure of the protection control or switching shall not render the microwave link inoperable. Any failure of the protection control or switching equipment shall generate a major alarm.

3.24.6 Equipment shall be designed so that protection circuits and units not in service can be tested and repaired without affecting the online system operation.

3.24.7 Amplitude of the digital output signal shall not change more than 2 dB as a result of a transmitter protection switching action.

3.24.8 If both receivers in a hot-standby configuration indicated a received signal level of less than the threshold, the protection circuits shall cause a reverse channel signal to be transmitted to command the standby transmitter to switch on at the far end. This requirement only applies to 6GHz, and 11Ghz systems.

3.25 Space Diversity

3.25.1 Equipment supplied with space diversity receive capability shall provide errorless switching between the transition from one receiver to the other.

3.26 Adaptive Equalization

3.26.1 Adaptive equalization shall be included in all radio receivers. The dispersive fade margin shall be greater than or equal to:

3.26.1 (a) 60 dB for radios operating at DS-3 rates and below

3.26.1 (b) 46 dB for radios operating at 2 DS-3 rates and above

3.26.1 (c) 39 dB for radios operating at OC3-3 rates and above

3.26.1 (d) 50 dB for radios operating 18GHz

3.26.1 (e) 40 dB for radios operating 23GHz

3.26.2 If Co-Channel Cross-Polarization Interference Correction (XPIC) Equalization is offered, the Contractor should so indicate.

3.27 General Radio Digital Performance

This section describes the general performance requirements for bit error rates. Reframe time and frame-lost seconds (FLS). A frame-lost second (FLS) is defined as a 1 second interval during which an out-of-frame condition exists or when the BER is 1x10E-3 or less. No FLS seconds shall be recorded in any consecutive 7-day test period when there are no radio fading effects. The recovery time of the radio from out-of-frame and out-of-synchronization conditions to reframed and resynchronized conditions shall nominally be 0.25 second or less. No more than 5 percent of the recovery times shall exceed 0.5 second. The maximum recovery time shall be 2 seconds or less. The reframe time (search time plus time to establish frame alignment) shall not exceed 7 ms for the level 2 (DS-2 with additional overhead bits) to the DS-1 stage of multiplexing.

3.28 DS-1 Digital Performance and Interface

3.28.1 DS-1 low-speed interface shall be as per Bellcore TR-NWT-000499 and ANSI T1.102 as applicable.

3.28.2 Basic specification shall be as follows:

3.28.2 (a) Data Rate: 1.544M bps ± 32 ppm

3.28.2 (b) Line Impedance: 100 ohms, ± 5 percent, balanced

3.28.2 (c) Line Code: User-selectable bipolar AMI or B8ZS

3.28.2 (d) Jitter Accommodation: per TR-NWT-000499 and TR-NWT-00499

3.28.3 Residual bit error rate shall not be greater than 1 in 10-12.

3.28.4 Loss of synchronization of any DS-1 signal shall cause an Alarm Indication Signal (AIS) of all ones to be transmitted. This AIS signal shall be repeated throughout the system as applicable.

3.29 DS-3 Digital Performance ad Interface

3.29.1 DS-3 high-speed interfaces shall be per Bellcore TR-NWT-000499 and ANSI T1.102.

3.29.2 Basic interface specification is as follows:

3.29.2 (a) Data Rate: 44.736M bps, ± 20 ppm

3.29.2 (b) Line code: B3ZS

3.29.2 (c) Line Impedance: 75 ohms, unbalanced

3.29.2 (d) Jitter Accommodation: per TR-TSY-000499 and TR-NWT-00499.

3.30 OC-3 Digital Performance and Interface

3.30.1 OC-3 interface shall comply with ANSI T1.106/88, T1.105a/90, and T1.105/90 specifications.

3.31 General Transmitter Specifications

3.31.1 Frequency tolerance shall meet or exceed FCC Part 101.107. Frequency stability is expected to be ±0.0025 percent or greater over the full operating range of the equipment.

3.31.2 Failure of a redundant amplifier in hot-standby configurations shall not reduce the power output from the radio.

3.31.3 Replacement of a failed redundant (standby) amplifier shall not cause a system outage.

3.31.4 Transmitter shall be equipped with ability to monitor output power and frequency on an in-service basis.

3.32 Regulatory Compliance

3.32.1 Radio equipment supplied under this contract shall meet the requirement of the current Sub-Sections of Volume 47 of the Federal Code of Regulations.

3.33 Outdoor Mounted RF Unit

3.33.1 Outdoor mounted RF unit when supplied shall comply with the requirements of this section.

3.33.2 Operating temperature range shall be -30 degrees C to +55 degrees C.

3.33.3 Unit shall be weatherproof.

3.33.4 Outdoor RF unit shall connect to the indoor IF and control unit using a 50-ohm coaxial cable. The coaxial cable shall transport signals and DC power to the RF unit.

3.33.5 It shall be possible to install the remote unit with up to 1,000 feet of cable between it and the indoor control unit.

3.33.6 Outdoor unit shall have a rack-mounting option so the outdoor unit may be collocated with the indoor unit.

3.34 RF Performance Characteristics for Radio Equipment Operating in the 900 MHz Microwave Radio Band

3.35 For the Band of 928 to 960 MHz with bandwidths of 100 and 200 KHz

3.35.1 Contractor shall provide other bandwidths as options. These shall be fully compliant with the current FCC Part 101 technical requirements.

3.36 Frequency Tolerance

3.36.1 Frequency tolerance shall meet or exceed FCC Part 101.107. Frequency stability is expected to be 2.5 ppm or greater over the full operating range of the equipment.

3.37 Feed Connection

3.37.1 Type “N” connectors are the expected feedline terminations.

3.38 RF Power Levels

3.38.1 Power levels shall be user adjustable up to a +29 dBm output.

3.39 Receiver Thresholds

3.39.1 Receivers shall have the following guaranteed receive thresholds as a maximum level to obtain a BER 1x10E-6 Guaranteed capacity at minimum Received Signal Level (RSL) in dBm as listed below.

3.39.1 (a)	Bandwidth	Received Signal Level (RSL) in dBm	
3.39.1 (b)	100 KHz	-94	96
3.39.1 (c)	200 KHz	-90	91

3.39.2 Contractors may provide other bandwidths as options. These shall be fully compliant with the current FCC Part 101 technical requirements.

3.40 RF Performance Characteristics for Radio Equipment Operating in the 5.9-7.1 GHz Microwave Radio Band.

3.41 6 GHz Frequency Range and Bandwidth

3.41.1 Equipment supplied for this band shall comply with the following requirements, with payload capacities in compliance with FCC Part 101.141:

3.41.2 Desired capacities are from 8xDS1 to 3DS3/OC3 (and equivalent Ethernet data rates) and bandwidths from 3.75 to 30 MHz.

3.41.3 Contractor may provide other bandwidths as options. These shall be fully compliant with the current FCC Part 101 technical requirements.

3.42 Feedline Connection

3.42.1 Antenna connection shall be a CPR-137G. If an adapter is required to convert from the standard flange on the radio unit, it shall be supplied and included in the unit price.

3.42.2 System shall operate with an antenna system with a peak return loss of 18 dB or greater.

3.42.3 Feedline connection point shall be at the top of the radio, clear of any obstructions. In cases where the radios are mounted two or more to a rack, the feedline connection may exit perpendicular to the back of the radio. However, in those cases, the Contractor shall supply a rigid waveguide right-angle section to allow the connection to be made vertically.

3.42.4 Antenna coupling unit shall have an option to accommodate the interconnection of additional analog or digital microwave radios to a common waveguide antenna feeder system.

3.42.5 Systems with ODU mounted outdoors at the antenna port, there shall be options to connect to antenna directly or remotely.

3.43 RF Power Levels

3.43.1 Equipment shall have a minimum output High power level of +26dBm and Low Power level of less than or equal to +21dBm

3.43.2 Power levels shall be measured at the top of the waveguide flange and shall include all branching losses. Hot-standby configurations may have power levels reduced from the levels listed above to account for switching losses.

3.43.3 Automatic transmitter power control (ATPC) shall be available as an option. It shall be capable of being disabled in the field by operator programming.

3.44 Receiver Thresholds

3.44.1 Receivers shall have the following guaranteed receive thresholds as a maximum level to obtain a BER 1x10E-6 in a nonprotected configuration. Guaranteed capacity at minimum Received Signal Level (RSL) in dBm as listed below.

3.44.1 (a)	8- DS-1/ 3.75 MHz	-77	77	83	83
3.44.1 (b)	16 - DS-1/ 5 MHz	-75	77	76	78
3.44.1 (c)	28 - DS-1/ 10 MHz	-74	77	74	77 78
3.44.1 (d)	84 - DS-1/ 30 MHz	-70	73	70	71 75

3.44.2 Received threshold levels shall be measured at the top of the flange and shall include all branching losses.

3.45 RF Performance Characteristics for Radio Equipment Operating in the 10-11 GHz Microwave Radio Band.

3.46 10-11 GHz Frequency Range and Bandwidth

3.46.1 Equipment supplied for this band shall comply with the following requirements, with payload capacities in compliance with FCC Part 101.141:

3.46.2 Desired capacities are from 8xDS1 to 3DS3/OC3 (and equivalent Ethernet data rates) and bandwidths from 3.75 to 30 MHz.

3.46.3 Contractor may provide other bandwidths as options. These shall be fully compliant with the current FCC Part 101 technical requirements.

3.47 Feedline Connection

3.47.1 Antenna connection shall be a CPR-90G. If an adapter is required to convert from the standard flange on the radio unit, it shall be supplied and included in the unit price.

3.47.2 System shall operate with an antenna system with a peak return loss of 23 dB or greater.

3.47.3 A single feedline connection point shall be provided for all radio configurations except space diversity. Space diversity configurations shall have two feedline connection points—one for one receiver and any transmitters and the other for the diversity receiver.

3.47.4 Feedline connection point shall be at the top of the radio, clear of any obstructions. In cases where the radios are mounted two or more to a rack, the feedline connection may

exit perpendicular to the back of the radio. However, in those cases, the Contractor shall supply a rigid waveguide right-angle section to allow the connection to be made vertically.

3.47.5 Antenna coupling unit shall have an option to accommodate the interconnection of additional analog or digital microwave radios to a common waveguide antenna feeder system.

3.48 RF Power Levels

3.48.1 Equipment shall have a minimum output High power level of +27dBm and Low Power level of less than or equal to +20dBm.

3.48.2 Automatic transmitter power control (ATPC) shall be available as an option. It shall be capable of being disabled in the field by operator programming.

3.49 Receiver Thresholds

3.49.1 Receivers shall have the following guaranteed receive thresholds as a maximum level to obtain a BER 1x10E-6 in a nonprotected configuration. Guaranteed capacity at minimum Received Signal Level (RSL) in dBm as listed below.

	Capacity	Received Signal Level (RSL) in dBm				
3.49.1 (a)	8 - DS-1 / 3.75 MHz	-76	76			82
3.49.1 (b)	16 - DS-1 / 5 MHz	-75	76			76
3.49.1 (c)	28 - DS-1 / 10 MHz	-73	76	73	76	77
3.49.1 (d)	84 - DS-1 / 30 MHz	-68	72	69	71	73

3.49.2 Received threshold levels shall be measured at the top of the flange and shall include all branching losses.

3.50 RF Performance Characteristics for Radio Equipment Operating in the 18 GHz Microwave Radio Band

3.51 Frequency Range and Bandwidth

3.51.1 Equipment supplied for this band shall comply with the following requirements, with payload capacities in compliance with FCC Part 101.141:

3.51.2 Desired capacities are from 16xDS1 to 3DS3/OC3 (and equivalent Ethernet data rates) and bandwidths from 5 to 30 MHz.

3.51.3 Contractor may provide other bandwidths as options. These shall be fully compliant with the current FCC Part 101 technical requirements.

3.52 Feedline Connection

3.52.1 Antenna connection shall be a UG-595/U. If an adapter is required to convert from the standard flange on the radio unit, it shall be supplied and included in the unit price.

3.52.2 System shall operate with an antenna system with a peak return loss of 15 dB or greater.

3.52.3 A single feedline connection point shall be provided for all radio configurations except space diversity. Space diversity configurations shall have two feedline connection points—one for one receiver and any transmitters and the other for the diversity receiver. In lieu of this arrangement, two antennas and two RF units may be used with one RF unit operating at a time. If space diversity is not commonly deployed, nor useful at these frequencies, fully describe in your answer.

3.52.4 Feedline connection point shall be clear of any obstructions.

3.52.5 RF unit and antenna is to be mounted outdoors, then options shall be provided to integrate them.

3.53 RF Power Levels

3.53.1 Equipment shall have a minimum output power level of +16dBm for 16 QAM and 20dBm for QPSK. Bidders may provide additional power level options.

3.53.2 Power levels shall be measured at the top of the waveguide flange and shall include all branching losses. Hot-standby configurations may have power levels reduced from the levels listed above to account for switching losses.

3.54 Receiver Thresholds

3.54.1 **Receivers shall have the following guaranteed receive thresholds as a maximum level to obtain a BER 1x10E-6 in a non-protected configuration.**

3.54.2 **Guaranteed capacity at minimum Received Signal Level (RSL) in dBm as listed below.**

Capacity		Received Signal Level (RSL) in dBm	
3.54.2 (a)	Power16 - DS-1 / 5 MHz		-77
3.54.2 (b)	28 - DS-1 / 10 MHz	-80	
3.54.2 (c)	84 - DS-1 / 30 MHz	-67	73

3.54.3 Received threshold levels shall be measured at the top of the flange and shall include all branching losses.

3.55 RF Performance Characteristics for Radio Equipment Operating in the 23 GHz Microwave Radio Band

3.56 Frequency Range and Bandwidth

3.56.1 Equipment supplied for this band shall comply with the following requirements, with payload capacities in compliance with FCC Part 101.141:

3.56.2 Desired capacities are from 16xDS1 to 3DS3/OC3 (and equivalent Ethernet data rates) and bandwidths from 5 to 50 MHz.

3.56.3 Contractor may provide other bandwidths as options. These shall be fully compliant with the current FCC Part 101 technical requirements.

3.57 Feedline Connection

3.57.1 Antenna connection shall be a UG-595/U. If an adapter is required to convert from the standard flange on the radio unit, it shall be supplied and included in the unit price.

3.57.2 System shall operate with an antenna system with a peak return loss of 15 dB or greater.

3.57.3 Single feedline connection point shall be provided for all radio configurations except space diversity. Space diversity configurations shall have two feedline connection points—one for one receiver and any transmitters and the other for the diversity receiver. (In lieu of this arrangement, two antennas and two RF units may be used with one RF unit operating at a time. If space diversity is not commonly deployed, nor useful at these frequencies, fully describe in your quote.)

3.57.4 Feedline connection point shall be clear of any obstructions.

3.57.5 RF unit and antenna is to be mounted outdoors, then options shall be provided to integrate them.

3.58 Receivers Thresholds

3.58.1 Receivers shall have the following guaranteed receive thresholds as a maximum level to obtain a BER 1x10E-6 in a nonprotected configuration.

3.58.2 Guaranteed capacity at minimum Received Signal Level (RSL) in dBm as listed below.

Capacity	Received Signal Level (RSL) in dBm

3.58.2 (a)	16 - DS-1	-78	
3.58.2 (b)	28 - DS-1	-78	
3.58.2 (c)	84 - DS-1	-68	73

3.58.3 Received threshold levels shall be measured at the top of the flange and shall include all branching losses.

4.0 LMR Base Station Antennas, Microwave Antennas

4.1 Offer(s) and Product Qualifications

4.1.1 Offer(s) shall be the manufacturer or distributers of the products requested and specified;

4.1.2 This solicitation describes Base Station Antennas for use in public safety land mobile systems. Antennas should provide selection of operating frequency, bandwidth, gain, antenna style, and construction format. The public safety frequency bands specifically requested for this section include: VHF (150 to 160 MHz), UHF (450 to 474 MHz), 700 (758 to 806 MHz), and 800 (806 to 869MHz). Additional bands and broader bandwidths, than those listed, is desirable but not specifically required; and

4.1.3 Antennas need to be designed for durability and reliability. Designed for the heat, cold, ice and wind conditions. Arizona's record high temperature was 122 degrees and had a record low of -40 degrees. Mountain top wind speeds can be in access of 100 MPH. While not typical, wind speeds in access of 140 MPH have been reported. VSWR shall be 1.5:1 or better at the rated frequency/bandwidth, nominal impendence of 50 ohms. Low PIM performance may be a consideration for some agencies.

4.2 Type(s) of LMR Antennas

4.2.1 The following antennas shall operate in the bands listed above.

4.2.1 (a) Fiberglass collinear antennas;

4.2.1 (b) Exposed dipole antennas - User adjustable patterns shall be a consideration for some users;

4.2.1 (c) Directional antennas; yagi, log periodic, and corner reflector antennas;

4.2.1 (d) Flat panel antennas; and

4.2.1 (e) Ground plane, discone, and other unity gain antennas.

4.3 Microwave Antennas (Dishes)

4.3.1 Microwave Antenna (Dishes) shall be the latest state of the art Microwave Antennas and Associated Equipment of use in specified frequency bands to meet the needs of the Eligible Agencies.

4.3.2 All equipment selected as suitable for purchase shall be given classification within the frequency band groups as follows:

Frequency Band

4.3.2 (a) 5.925-7.125 GHz

4.3.2 (b) 10.70-11.70 GHz

4.3.2 (c) 17.70-19.70 GHz

4.3.2 (d) 21.8-23.60 GHz

4.3.3 Federal Communications Commission (FCC) Rules and Regulations and amendments; E.I.A. Standards and amendments, RS222. (Latest Version)

4.3.4 All material and workmanship shall be of the type and grade most suitable for the application. All material shall be new and free from defects.

4.3.5 Unless specifically excepted by the terms of these specifications, any part or accessories ordinarily furnished or required to make the equipment, herein specified, a complete operating unit shall be furnished by the Vendor.

4.3.6 The contractor shall make available equipment documentation to The State's as specified herein. This documentation shall accompany the equipment at the time of delivery. Documentation costs for State's specified manuals shall be included as separate bid items. A copy of radiation patterns shall be provided at no cost if requested.

4.4 Service, Installation and Operations Manuals

4.4.1 Installation and or operation manuals shall be furnished with each order; each manual shall contain the following:

4.4.1 (a) Detailed drawings or clear photographs showing location of parts and hardware associated with antenna or connector assembly or mounting.

4.4.1 (b) Complete diagrams including information outlining method of operation, supply voltages, currents, and power requirements for each model of dehydrators.

4.5 Equipment Service Life

4.5.1 All equipment covered by these specifications and any resultant contracts shall have a minimum service life of ten (10) years from date of delivery to the State. The contractor shall guarantee replacement parts stocking for this service life period.

4.5.2 Each shall guarantee repair or replacement of any equipment or part thereof that fails in operation during normal and proper use within two (2) years from the date of State's receipt due to defects in design, material or workmanship, consummation of final acceptance and payment notwithstanding. These replacements shall be provided with no charge to the State.

4.5.3 Any equipment or part replaced under the provisions of this warranty becomes the property of the. If the vendor desires the defective equipment or part returned, The contractor shall pay all transportation charges and make all arrangements for the return. If the does not specifically request return of such replaced parts within thirty (30) days from the date of replacement, the equipment for parts become property of the State.

4.5.4 Replacement parts shall be regularly stocked by the manufacturer and/or authorized distributor. Delay in State's receipt of replacement parts shall not exceed thirty (30) consecutive days from manufacturer or distributor's receipt of order.

4.5.5 Emergency orders shall be transported by the most expedient manner available as agreed upon with the transportation cost born by the State less normal shipping cost.

4.6 General Equipment Characteristics

4.6.1 **Environmental** - All antennas shall survive wind velocities of one hundred (100) miles per hour with one (1) inch of radial ice and no more than 0.1 degree of deflection in seventy (70) mile per hour wind.

4.6.2 **Environmental** - All antennas shall remain operational within the temperature range of (-40 to 135 degree F)

4.6.3 **Environmental** - All antennas and associated hardware shall be non-corrosive, non-rust material. This can be accomplished by supplying Hot Dipped Galvanized or Stainless Steel hardware. Plated steel shall not be accepted. Aluminum antennas shall be painted with corrosion resistant paint.

4.6.4 **Environmental** - Field assembly of all antennas shall only be between antenna parabola, feed, antenna mount and fixed and/or slide assemblies. Antenna mount assembly is permitted.

4.6.5 **Environmental** - Parabolic solid antennas shall be equipped to include mounting hardware for a 4.5" vertical O.D. mounting pipe. Parabolic grid antennas shall be equipped to include mounting hardware for either a 1.9" – 3.5" or a 4.5" vertical O.D.(Outside Diameter) mounting pipe.

4.6.6 **Environmental** - Parabolic solid antennas shall have a reflector surface tolerance designed so that antenna feeds could be interchanged between 6GHz and 11 GHz without loss to antenna gain. Antenna feeds should also be interchangeable in the 18GHz and 23GHz dishes.

4.6.7 **Operational** - Material and workmanship shall be of the type and grade most suitable for the application and shall conform as a minimum unless otherwise specified to the latest applicable standards, specifications, recommended practices and procedures of such standardizing bodies as the I.E.E.E(Institute of Electrical and Electronics Engineers), N.E.M.A.(National Electrical Manufacturers Association), F.C.C.(Federal Communications Commission).

4.7 Microwave Antennas

4.7.1 The specifications listed herein are minimum requirements. These dish examples are for evaluation of the offered product lines. Frequencies listed represent the basic band of operation, which may consist of operational sub-bands. *A range variance of up to a maximum of -1 DB has been identified as acceptable. # VSWR is for standard bandwidths, a wide-bandwidth dish in the same product time with lesser VSWR performance is expected and acceptable.

Standard Performance, 5.925-7.125 GHz Band, Single Polarization , CPR 137G Input Flange

Diameter in Feet	Gain–DB Bottom	Gain-DB Mid Band	Gain-DB Top	FCC Category	Beam Width Degrees	Cross Pol Disc. DB	F/B Ratio DB	VSWR
6	38.4	38.7	39.1	A	1.9	30	55	1.3
8	40.1	41.2	40.3	A	1.5	30	55	1.3
10	42.8	43.2	43.5	A	1.2	30	61	1.3

High Performance, 5.925-7.125 GHz Band, Single Polarization, CPR137G Input

Diameter in Feet	Gain–DB Bottom	Gain-DB Mid Band	Gain-DB Top	FCC Category	Beam Width Degrees	Cross Pol Disc. DB	F/B Ratio DB	VSWR
6	38.4	39.	39.3	A	1.9	30	62	1.08
8	41.2	41.6	42	A	1.5	30	66	1.08
10	43	43.4	43.7	A	1.2	30	69	1.08

Ultra High Performance, 5.925-7.125 GHz, Super High Cross Polarization, CPR137G Input

Diameter in Feet	Gain–DB Bottom	Gain-DB Mid Band	Gain-DB Top	FCC Category	Beam Width Degrees	Cross Pol Disc. DB	F/B Ratio DB	VSWR
6	38.3	38.7	39	A	1.9	40	69	1.08
8	40.9	41.3	41.7	A	1.5	40	71	1.08
10	43	43.2	43.5	A	1.2	40	74	1.08

Standard Performance, 10.5-11.7 GHz, Single Polarization , CPR 90G Input Flange								
Diameter in Feet	Gain–DB Bottom	Gain-DB Mid Band	Gain-DB Top	FCC Category	Beam Width Degrees	Cross Pol Disc. DB	F/B Ratio DB	VSWR
4	40.1	40.5	40.9	A	1.7	30	46	1.08
6	43.2	43.3	43.4	A	1.2	30	60	1.08
8	45.8	46.0	46.2	A	0.9	30	62	1.08

High Performance, 10.5-11.7 GHz Single Polarization, CPR90G – PBR 100 Input								
Diameter in Feet	Gain–DB Bottom	Gain-DB Mid Band	Gain-DB Top	FCC Category	Beam Width Degrees	Cross Pol Disc. DB	F/B Ratio DB	VSWR
4	39.7	39.8	39.9	A	1.7	30	61	1.08
6	43.5	43.6	43.7	A	1.1	30	68	1.08
8	45.7	45.9	46	A	0.8	30	68	1.08

Ultra High Performance, 10.5-11.7 GHz, Super High Cross Polarization, CPR90G – PBR 100 Input								
Diameter in Feet	Gain–DB Bottom	Gain-DB Mid Band	Gain-DB Top	FCC Category	Beam Width Degrees	Cross Pol Disc. DB	F/B Ratio DB	VSWR
4	39.7	39.8	39.9	A	1.7	40	64	1.10
6	43.2	43.3	43.4	A	1.1	40	72	1.08
8	45.6	45.8	45.9	A	0.8	40	75	1.08

Ultra High Performance, 17.7-19.7 GHz, Super High Cross Polarization, UG595/U – PBR220 Input								
Diameter in Feet	Gain–DB Bottom	Gain-DB Mid Band	Gain-DB Top	FCC Category	Beam Width Degrees	Cross Pol Disc. DB	F/B Ratio DB	VSWR
2	38	38.4	38.8	A	1.9	36	64	1.2
4	44	44.4	44.8	A	1.0	36	67	1.2
6	47.5	48	48.4	A	0.7	36	72	1.2

Parabolic Antenna, 21.2-23.6 GHz, Single Polarization, UG-595/U – PBR220 Input Flange								
Diameter in Feet	Gain–DB Bottom	Gain-DB Mid Band	Gain-DB Top	FCC Category	Beam Width Degrees	Cross Pol Disc. DB	F/B Ratio DB	VSWR
2	39.7	40.2	40.7	A	1.7	30	65	1.4
3	43.1	43.6	44.1	A	1.1	30	71	1.4
4	49.0	46	46.6	A	.8	30	72	1.4

4.8 Radomes

4.8.1 High Performance Antennas shall have flexible planar Radomes supplied with antenna.

4.8.2 All Standard Antennas shall have molded fiberglass Radomes, parabolic or conical in shape available.

4.9 Dehydrators

4.9.1 Dry air pressurization equipment for waveguide transmission lines. Low-pressure systems to pressurize waveguides with dry air. Systems should provide alarm monitoring of a low presure condition and excessive run time. Systems shall be rack or wall mounted. Power options shall be AC or DC power. Accessories shall include Distribution Manifolds and tubing.

1.	½", 7/8", 1-¼"	Diameter Foam Dielectric Coaxial Cable
2.	7/8"	Diameter Air Dielectric Coaxial Cable
3.	1 5/8"	Diameter Foam Dielectric Coaxial Cable
4.	½"	Diameter Super Flexible Foam Dielectric Coaxial Cable

4.10 Transmission Lines

4.10.1 Transmission line or COAXIAL cable shall be available according to the sizes listed below:

4.10.2 Elliptical, Flex and Rigid waveguide components shall be supplied according to the sizes and/or frequency bands listed below:

1.	Waveguide for	5.925 – 7.125 GHz
2.	Waveguide for	10.50 – 11.70 GHz
3.	Waveguide for	17.70 – 19.70 GHz
4.	Waveguide for	21.20 – 23.60 GHz

4.11 Connectors

4.11.1 **LMR Connectors**

	½" Connector	7/8" Connector	1-¼' Connector	1-5/8 connector	½" Super Flexible Connector
1.	"N" Male	"N" Male	"N" Male	"N" Male	"N" Male
2.	"N" Female	"N" Female	"N" Female	"N" Female	"N" Female
3.	UHF Male	UHF Male			UHF Male
4.	UHF Female	UHF Female			UHF Female
5.	7-16 DIN Male	7-16 DIN Male	7-16 DIN Male	7-16 DIN Male	7-16 DIN Male & Right Angle
6.	7-16 DIN Female	7-16 DIN Female	7-16 DIN Female	7-16 DIN Female	7-16 DIN Female
7.	7/8" EIA	7/8" EIA			

4.12 Waveguide Connectors

1.	EW63-E65, Tunable, Fixed Tuned, CPR and CPR 137G
2.	EW90-E105, Tunable, Fixed Tuned, CPR and, CPR 90G, PBR100
3.	EW180-E185, Fixed Tuned, UG595/U, PDR180
4.	EW220-E220, Fixed Tuned, UG595/U, PBR220

5.0 Radio Dispatch Consoles

5.1 General

5.1.1 This specification contains sections that describe various types of radio dispatch consoles to be utilized in State and Municipal public safety radio communications systems. These sections include (1) Single/dual channel desk top remote control handset controllers; (2) 8-12 channel desk-top dispatch consoles; (3) 96 channel, high capability radio dispatch consoles; (4) 450 channel remote electronics high-capability expandable radio dispatch consoles. Analog, TDM and RoIP/VoIP based options to be separately priced. It is not necessary for a vendor to bid all sections.

5.1.2 It is the intent of these specifications to ensure the purchase of highly reliable radio dispatch control console equipment. These specifications are minimum standards and are intended to ensure reliable, high quality, readily available and repairable equipment. These specifications may not list all necessary equipment beyond that needed to complete the electronic package and it shall be the responsibility of the contractor to verify completeness of the material list and the suitability of the devices to meet the total requirements of these specifications. Subsequent to award, any additional equipment, charges, or services required to meet the specifications, even if not specifically enumerated herein, shall be provided by the vendor without claim for additional payment or compensation.

5.1.3 The Type 2, 3, & 4 Flat Panel Display (FPD) communications control console electronic design criteria shall be based on the need for maximum reliability, flexibility, and ease of operation and service. To meet these criteria, the electronic equipment should be of the latest design. The design shall reflect state-of-the-art concepts in communications command and control console design.

5.1.4 The FPD based communications control consoles shall provide monitoring and control facilities for remotely located two-way radio base stations. The consoles shall also provide certain ancillary functions such as repeater enable and disable of each channel, simultaneous transmit, alert tone transmit, instant patching, and multiple frequency base station control. It is desired that all console functions be accomplished using a Touch-Screen and Trackball/Mouse combination. Other methods of console control will be evaluated and compared against this style of system control.

5.1.5 The ability of the vendor's FPD communications control consoles to remotely operate separately from the common control equipment over telephone lines, LAN, or digital and analog microwave channels is a requirement. Equipment that does not meet this requirement will not be evaluated.

5.1.6 The Type 3 & 4 common electronics shall be designed to remain fully operational during the loss of AC power for a minimum of one hour via either an internal or external

uninterruptible power supply (UPS). Each dispatch position shall have an available UPS option which will allow full operation during the loss of AC power for a minimum of thirty minutes.

5.1.7 The unique requirements of the console electronic packages may not readily lend themselves to standard contractor product lines. However, contractors shall propose equipment meeting the technical and operational requirements and make maximum use of the standard product line equipment.

5.1.8 Make and model numbers given in this specification are for reference only, and do not imply that they are the only acceptable equipment.

5.2 Electrical Requirements

5.2.1 Each console bid shall be equipped with sufficient power supply capabilities, common electronic modules, cabling, etc to accommodate the channel requirements. All consoles shall be capable of operating from a 120 VAC source. Backup power should ideally be from a DC source of 12 to 48 VDC, with all necessary power regulation built into console electronics.

5.3 Technical Specifications - Each console offered should meet the following technical specifications, as a minimum:

5.3.1 Individual channel 2W, 4W, Tone/DC/E&M selection

5.3.2 Line Impedance: 600 or >5K ohm (4-wire) or, 600 ohm Tx (2-wire)

5.3.3 Operating Temperature: 0 to +50 degrees C

5.3.4 Audio Response: +/- 3 dB from 300 to 3000 Hz

5.3.5 Tx & Rx Hum and Noise: -50 dB below rated output

5.3.6 Distortion: Tx & Rx - Less than 3% THD

5.3.7 Compression: Variable compression knee

5.3.8 Receive Audio: -25 to +10 dBm; 600 ohm or 5K ohm; w/ less than -60 dB crosstalk

5.3.9 Transmit Audio: -20 to +10 dBm; 600 ohm; w/ 70 dB line balance

5.3.10 Tone Control: A minimum of (7) industry standard function tones with 2175 Hz Hi/Lo Guard Tone; including 1250/1350/1450/1550, 1850 and 1950 Hz function tones (Repeater control, Aux Function control, CTCSS Monitor, F1/F2 Transmit)

5.3.11 DC Control Functions: Transmit - F1 +5.5 ma.; F2 +12.5 ma.; Monitor +2.5 ma.

5.3.12 Unit ID Functions: (Optional) Motorola MDC1200 system decode/display

5.3.13 Speaker Output: 500 mw minimum, 3% distortion, into a 4 ohm or 8 ohm load

5.4 DESK-TOP REMOTE CONTROL CONSOLES (TYPE I price category)

5.4.1 **General -** The following specification describes various switch-based, desk-top radio controllers, including fully self-contained Tone, DC & RoIP based single-channel and dual-channel telephone-type handset controllers (optionally expandable) known as Type 1; and 8-channel (expandable to at least 12 channel), self-contained desk-top consoles, known as Type 2. The multichannel desk-top units also allow for local remoting of the control electronics to a small desk or wall mounted electronic box up to 100' away from the dispatch control unit. Optional IP control for both type units may also be proposed.

5.4.2 Tone & DC Single/Dual-channel Handset Type Controllers (Type 1) - This specification is for a solid-state, 120 VAC powered, desk-top, handset type, Tone or DC controller for a single channel station. A selectable two-channel, expandable, model may also be offered as an option, which may also be optionally expandable to more channels. Models which have been determined to meet the general intent of this specification include the IDA 24-10, 24-15, 24-20, 24-66, and 24-30; The Telex-Vega IP-2002, and C-2000 and C-2000SF

units. (These models are only given as examples, and alternate models meeting the specifications may be proposed).

5.4.3 Technical Specifications

5.4.3 (a) On-hook monitor disable

5.4.3 (b) Weight: Less than 5 pounds (Desk-top unit)

5.4.3 (c) Size (Remote Box): Less than 12"X12"X6", including battery back-up

5.4.3 (d) Programmability: Fully field adjustable/programmable without a computer

5.4.3 (e) Transmit indicator light

5.4.3 (f) The units shall allow for on-hook receiver operation through a loudspeaker, and off-hook operation through the handset.

5.4.3 (g) An RoIP based remote, single-line handset controller, that does not require a separate computer for operation, is also acceptable. These handsets shall be fully compatible for direct connection to a 10/100 baseT internal Ethernet network connection, and shall allow for parallel operation of any number of controllers.

5.4.3 (h) Optional two-line controllers do not require the ability to independently select either 2W/4W operation by channel, Tone or DC control by channel, or simultaneous receiver monitoring of both channels. These may all be fixed (hard-wired) functions.

5.5 (8)-Channel Desk-Top Tone/DC Consoles (Required to be Expandable to 12 Channels) (Type II price category)

5.5.1 This section defines the minimum requirements for a desk-top radio control console with a minimum 6 individual channel (line) capability, with optional expansion to at least 12 channels on a channel-by-channel basis. Each console channel shall be capable of controlling either a 4-wire channel or 2 wire channel on an individual basis, and shall be individually programmable for either Tone, DC (current), or E&M radio control. Local remote control of a radio is not required. Optionally, the manufacturer may offer an RoIP based console which can control a remote radio through an IP data circuit, but must still provide two-way analog audio capability on all channels.

5.5.2 Parallel operation of up to 4 separate units shall be available with supervisory override control.

5.5.3 The dispatch operator position shall be a single unit, except for the microphone and footswitch, or an outboard third-party provided paging encoder. No external attachments, including power supplies, loudspeakers, touch-tone pads, line splitter boxes to increase channel count, etc. will be acceptable.

5.5.4 It is required that the vendor offer switch-based control functions for their console. However, optional computer-based, Flat Panel Display (FPD) consoles offering mouse-controlled on-screen function switches will be evaluated if offered. Models of equipment which have been determined to meet the intent of this section of the specification include the Gai-tronics ICP9000 Series, and the Telex-Vega C1616/C6200, IP-1616, C-Soft series, for various channel configurations.

5.5.5 Operational Features Require, each dispatch console operator position offered must include the following:

5.5.5 (a) Individual audio speakers and volume controls for select and unselected channels

5.5.5 (b) Individual channel 2W, 4W, Tone/DC/E&M selection, with 4-frequency Tone control

5.5.5 (c) Desk-mic with PTT bar and mute switch

5.5.5 (d) Dual-plug type headset interface jacks

5.5.5 (e) Combined select/unselect/transmit audio combined output jack for recording

5.5.5 (f) Jack for external PTT footswitch

5.5.5 (g) (2)-channel cross-patch capability

5.5.5 (h) Multi-channel transmit select

5.5.5 (i) DTMF encoder

5.5.5 (j) Internal or external pager capability

5.5.5 (k) Controls/Indicators

5.5.6 Each dispatch console operator position offered must include the following:

5.5.6 (a) Console transmit indicator

5.5.6 (b) Console channel busy (receiving) green indicator

5.5.6 (c) Individual channel instant-transmit light

5.5.6 (d) Channel labels (fixed or electronic)

5.5.6 (e) Transmit audio level meter (Vu meter)

5.5.6 (f) Channel select indicator

5.5.6 (g) Console Technical Specifications

5.5.7 Each console offered should also meet the following technical specifications, as a minimum:

5.5.7 (a) Alert Tones: Optional continuous, hi/lo, warble; -30 to 0 dBm, independently adjustable

5.5.7 (b) Speaker Output: 500 mw minimum, 3% distortion, into a 4 ohm or 8 ohm load

5.6 Full Featured – Remote Electronics Consoles (Type III Price Category)

5.6.1 General - It is the intent of this specification to ensure the purchase of highly reliable communications control consoles. This includes a spectrum of console systems ranging from single 96 (minimum) channel remote units (Type III), to advanced Flat Panel Display (FPD) based, high 450 (minimum) channel, 20 operator position systems (Type IV). These specifications are minimum standards and are intended to ensure reliable, high quality, readily available and repairable equipment. These specifications may not list all necessary equipment beyond that needed to complete the electronic package and it shall be the responsibility of the contractor to verify the completeness of the material list and the suitability of the devices to meet the total requirements of these specifications. Subsequent to proposal award, any additional equipment, charges, or services required to meet the specifications, even if not specifically enumerated herein, shall be provided by the vendor without claim for additional payment or compensation.

5.6.2 The communications control console electronic design criteria shall be based on the need for maximum reliability, flexibility, ease of operation and service. The design shall reflect state-of-the-art concepts in communications command and control console design.

5.6.3 The communications control console shall provide monitoring and control facilities for remotely located two-way radio base stations. The console shall also provide certain ancillary functions such as repeater enable and disable of each channel, simultaneous transmit, alert tone transmit, instant transmit, supervisory override, cross channel patching with up to three separate but simultaneous patches possible, phone patching, and multiple frequency base station control. It is desired that all FPD-Type console functions be

accomplished using a Touch Screen and Trackball/Mouse combination. Other methods of console control will be evaluated and compared against this style of system control.

5.6.4 The ability of the vendor's FPD communications control consoles in Category III and IV to remotely operate separately from the common electronic control equipment over telephone lines, microwave channels or fiber optic lines is a requirement. Equipment that does not meet this requirement will not be evaluated.

5.6.5 Each Type III and IV console shall have both receive voter (like JPS SNVs) and auxiliary interfaces. Both RoIP and P25 interfaces are a requirement for both classes. In addition, at least one of the following trunking protocols MUST be supported as an option: Project 25, Astro P25, Open Sky, Smartnet/Smartzone. In addition, each console should be compatible with either a T1 or a WAN/LAN interface.

5.6.6 The common electronics and FPD operator positions shall be designed to remain fully operational during the loss of AC power for a minimum of one-half hour via either an internal or external uninterruptible power supply (UPS) or a battery backup system. Each FPD dispatch position shall have an available UPS option which will allow full operation during the loss of AC power for a minimum of one hour.

5.6.7 The unique requirements of the console electronic packages may not readily lend themselves to standard contractor product lines. However, contractors shall propose equipment meeting the technical and operational requirements that make maximum use of the standard product line equipment.

5.6.8 The specifications do not include any proprietary items, components, circuits, or devices which would preclude any communications equipment manufacturer from producing equipment to meet these specifications. All technical tolerances, ratings, power outputs, or any technically specified criteria contained within these specifications are considered to be within the current state of the electronic art and are currently being met by commercially available equipment.

5.7 Electrical Specifications

5.7.1 Both Type III and IV consoles shall operate from a primary power source of 120/240 VAC, with battery powered UPS backup required. AC current consumption on the primary side of the line for the central electronics shall not exceed 5 watts/channel for a 50 channels system. Each operator position electronics shall not consume more than 250 watts, including the FPD.

5.8 Full-Feature Console – Type III

5.8.1 The Type III communications control console shall provide the facilities for the operation and control of remotely located two-way radio base stations and other specialized equipment. The console shall be equipped with sufficient power supply capabilities, common electronic modules, cabling, etc. to accommodate these channel requirements. Each console electronic package shall be equipped with common control equipment to provide the capability to operate and control any one, any selected group, or all channels simultaneously. Each console electronic package shall comply with all FCC Rules and Regulations, where applicable.

5.8.2 The console shall be expandable to a minimum of 96 radio control channels and 6 operators' positions. There shall be receive voter (like JPS SNV-12s) and auxiliary control interfaces. In addition to the 96 radio channels, the console electronics shall be able to support 6 operator positions, and up to ten receiver voter groups with up to 24 base stations per voter group. The ability of a manufacturer's equipment to accommodate this future requirement will be a major consideration in the proposal evaluation. In addition to controlling conventional non-trunked channels, at least one of the following protocols must be supported as an option: RoIP, Project-25, Trunking (EDACS, Smartnet, Smartzone,

OpenSky). T1, or Lan/Wan interfaces may be optionally added. The console shall have extended remote capability to allow an operator position to be remoted from the central electronics bank by way of commercial telephone lines, Ethernet, fiber optic, or microwave.

5.9 Large Full-Feature Console – Classification (Type IV Price Category)

5.9.1 General Specifications same as Type III above. The console shall be expandable to a minimum of 450 radio control channels and 20 operators positions. There shall be receiver voter (like JPS SNV-12s) and auxiliary interfaces. In addition to controlling conventional non-trunked channels, at least one of the following protocols must be supported as an option: RoIP, Project-25, Trunking (EDACS, Smartnet, Smartzone, OpenSky). Additionally, optional T1, or Lan/Wan interfaces may be added. The console shall have extended remote capability to allow an operator position to be remote from the central electronics bank by way of commercial telephone lines, fiber optic, or microwave. In addition to the 450 radio channels and/or trunked talk groups, the console electronics shall be able to support twenty operator positions and up to twenty receiver voter groups with an average of six base stations per voter group. The ability of a manufacturer's equipment to accommodate this future requirement will be a major consideration in the proposal evaluation.

5.10 Control Functions & Status Indicators

5.10.1 Both Class III and Class IV configurations shall meet all of the following specifications, and have two dual-jack inputs and have select and unselect speakers for audio output. In addition, there shall be a selected audio output jack and a summed unselect audio port available.

5.11 Radio Channel Control Functions

5.11.1 The radio control channels shall have the functions listed below:

5.11.1 (a) Channel Select - Shall engage the selected channel in the transmit/receive, fully operational, ready condition. The channel select function should be capable of selecting of more than one channel up to all channels simultaneously.

5.11.1 (b) Repeater Enable and Disable - consoles shall enable and disable the repeat function of a tone controlled base station.

5.11.1 (c) Squelch Disable - Shall disable receiver continuous tone coded squelch operation of a tone controlled base station.

5.11.1 (d) Instant Transmit - Shall allow transmitting on a channel without placing the channel in a selected mode first. This function shall not override supervisory control.

5.11.1 (e) Channel Crosspatch - Shall allow audio received on one radio channel or phone line to be automatically repeated on one or more of the other channels. Class III and IV consoles shall be capable of supporting at least three simultaneous but separate crosspatches. (Desktop consoles should be capable of doing at least one crosspatch.) This function shall be independent of other console activities.

5.11.1 (f) Two Frequency Control - Shall allow frequency selection of a two-frequency tone controlled base station.

5.11.1 (g) Supervisory Control B Class III and IV consoles shall provide the capability for one operator position (the supervisor's position) to take over a channel from all other operator positions. All parallel operator positions on the same channel shall receive an indication that supervisory control has been initiated.

5.11.1 (h) Supervisory Monitor B Class III and IV consoles shall allow the transmit and receive audio from one console operator position to be monitored on another console position.

5.11.1 (i) Channel Mute - shall completely mute the channel receive audio.

5.11.1 (j) Auxiliary Enable and Disable B consoles shall enable and disable an auxiliary function of a tone controlled base station.

5.12 Status Indicator

5.12.1 All switching functions shall have an associated indicator to clearly display function and channel status, i.e. on-off, activated-not activated, in use-not in use. The FPD system shall display complete status for a minimum of eight channels and limited status for the optional eight additional channels at each operator position. This limited status information shall include the following: channel selected, instant transmit activated, channel cross patch activated, channel muted, channel receiving a call, and channel busy.

5.12.2 To simplify the operation of the console, it shall be possible to physically group channels on the console in any order to facilitate operations.

5.12.3 Status Indicators shall illuminate with the following functions:

5.12.3 (a) Channel Selected

5.12.3 (b) Repeater Enabled

5.12.3 (c) Squelch Disabled

5.12.3 (d) Instant Transmit activated

5.12.3 (e) Channel Crosspatch activated

5.12.3 (f) Frequency One selected

5.12.3 (g) Frequency Two selected

5.12.3 (h) Channel Muted

5.12.3 (i) Channel receiving a call - this shall be a flashing type indicator

5.12.3 (j) Channel busy - parallel wired console transmitting

5.13 Console Position-wide Functions

5.13.1 In addition to the individual channel functions and indicators specified under paragraph 5.5, the communications control console shall also provide the following functions. These functions are common to all radio channels.

5.13.1 (a) Simultaneous Selection - Shall enable the selection of any combination of channels for simultaneous operation. The capability shall also be provided to automatically unselect all channels by depressing a single button.

5.13.1 (b) Transmit - Shall activate the transmit condition and route dispatcher audio to all selected channels. This transmit switch shall be electrically paralleled to the console footswitch.

5.13.1 (c) Master Mute - Shall mute all receive audio except the selected channels to a preset level.

5.13.1 (d) Automatic Selection - Shall automatically select a group of channels by action of a single switch. All automatically selected channels shall be unselected by action of a single switch. The particular group of channels to be selected shall include any combination up to all of the console channels.

5.13.1 (e) Intercom - consoles shall allow communication on the selected channels without keying the base station transmitter. This function shall allow communications between dispatchers or between dispatchers and remotely located technicians.

5.13.1 (f) Alert Tones - consoles shall activate one of three different alert tones that shall be transmitted on the selected channel, the simultaneously selected channels, or the automatically selected channels. The alert tones shall be continuous, hilo, or warbled between two different audio frequencies.

5.13.1 (g) Priority Tone – consoles shall activate an intermittent tone on individually selected channels to indicate priority traffic on that channel. The tone will not cover voice traffic.

5.13.1 (h) Radio/Telephone Audio - consoles shall allow the dispatcher's headset to be used for both telephone and radio communications. The telephone audio shall be transferred to the headset by action of a single switch. The party on the opposite end of the phone line shall not hear the dispatcher's radio transmissions (any console PTT shall mute the dispatcher's voice from the telephone line). Transfer of telephone audio to the headset shall switch the selected channel audio back out to the selected audio speaker. During the time that the headset telephone operation mode is activated, the console operator shall retain the ability to instantaneously transmit on the selected channel by use of the footswitch or master control panel transmit switch with no degradation to the transmit functions, transmit audio quality and/or signal strength. The dispatcher shall also retain the ability to instantaneously transmit on the unselected channels as well.

5.14 Status Indicators

5.14.1 All switching functions and the following status indication capabilities shall have an associated indicator on the FPD to clearly display function and status, i.e. on-off, activated-not activated, in use-not in use.

5.14.2 The status indicators shall illuminate with the following functions:

5.14.2 (a) Simultaneous Selection in use.

5.14.2 (b) Transmit function activated.

5.14.2 (c) Master Mute activated.

5.14.2 (d) Automatic Selection in use.

5.14.2 (e) Intercom in use.

5.14.2 (f) Alert Tone being transmitted.

5.15 Ancillary Equipment

5.15.1 The communications control console shall include the following ancillary equipment: speakers for selected audio and unselected audio, paging encoder, and displayed on the console's FPD, a VU meter, and clock system.

5.15.2 Speakers - The capability of monitoring selected and unselected audio shall be provided via two separate console speakers. Each speaker shall be provided with a separate volume control to allow for individual adjustment. The volume controls shall provide sufficient attenuation to decrease the associated speaker audio to an inaudible level. These two volume controls, along with the headset volume controls, are the only ones required. Separate volume controls for each of the radio channels are not required. The dispatcher shall still have the capability to completely mute individual channels if desired. The selected and unselected audio speakers shall be separated a minimum of 12 inches center to center. The dispatcher shall also have the capability to turn off either or both speakers without turning down the volume controls.

5.15.3 VU Meter - A VU meter, located on the FPD console's display in such a way as to give optimum visibility to the operator, shall be provided. The meter shall indicate the transmit audio level and selected receive audio level.

5.15.4 Digital Clock - The console shall include a 24-hour digital clock display in the FPD console's display. The clock display shall give optimum visibility to the operator. The clock display shall be an integral part of the console system. The clock shall be a master/slave system capable of being set from the master, which is to be calibrated by an external time base via RS232 protocol or USB interface.

5.15.5 DTMF Paging Encoder - The console(s) shall incorporate DTMF capability. These must be an integral part of the console electronics installed in the console furniture and wired into the console electronics. Single button paging functions shall be available which send preselected DTMF strings of at least 3 numbers to either a predetermined radio channel or on the selected channel(s).

5.15.6 Receivers - The radio control channels will not only be routed to the console as separate channels but may also be routed to a separate system of up to ten receiver voter groups. The console shall have the capability to control and display the status of these voted channels. The dispatcher shall be able to force vote or disable a particular voter module by engaging switches or keying in a function which will operate a) Two form C dry contacts or b) Open collector outputs or c) Communicate with the system via RS-232 or Ethernet cabling. The enable/disable status of a particular voter module shall be displayed at the operator position. The console shall also provide an indication of which channel is currently being voted. It also should be capable of automatic transmit steering and indicate on the FPD which transmitter will be keyed if the master PTT is activated. The voted channels shall support voting systems manufactured by JPS Communications.

5.15.7 Headset - Each operator position shall be compatible with the Plantronics Encore Monaural Ultra Headset, model H91N, or approved equivalent.

5.15.7 (a) Headset Jack

5.15.7 (b) Each operator position shall be equipped with a dual phone plug type headset jack. The jack shall be compatible with dual phone plugs used on the Plantronics model SHS1890-251N headset jack plugs. The headset jack shall have an associated receive volume control. The external microphone shall be disabled when the headset is inserted into the headset jack. Audio to the select speaker shall be removed when the headset is inserted. The dispatcher shall have the option of applying audio to the select speaker and the headset simultaneously if desired. The headset jack shall have an easily accessible talk/training switch which will allow the dispatcher to talk and listen or listen only with the headset=s transmit mouthpiece disabled. Disabling the transmit mouthpiece shall not prevent a headset with an amplified ear piece from functioning correctly. The headset jack must also have a 4 wire/6 wire switch for operating either a 4 wire headset (talk and listen) or a 6 wire headset (talk, listen, and a transmit push to talk button).

5.15.8 External Microphone - Each operator position shall be equipped with an External Microphone mounted on a Flexible Gooseneck Boom.

5.15.9 Footswitch - Each operator position shall be provided with a dual footswitch to activate transmit and/or mute operations. The dual footswitch shall activate two functions within the console:

5.15.9 (a) Activate transmitter control.

5.15.9 (b) Activate the Master Mute function.

5.15.9 (c) The right half of the footswitch shall operate in the same manner as the Master Control Panel transmit push button switch. The left half shall mute all unselected channels when depressed and unmute these channels when

released. If the console system requires modification to implement these functions, the modifications shall be completed by the console manufacturer and shall be fully documented in the maintenance manual(s).

5.15.10 Logging Recorder Interfaces - Each operator position shall be provided with a logging recorder output that contains the dispatch position microphone audio and select audio combined onto one 600-Ohm output port. An optional second logging recorder interface for telephone audio is desirable.

5.15.11 Remote Control of Base Stations - The communications control console shall be capable of providing D.C. keying, tone sequence keying, or "M Lead" dry contact keying for each radio channel as well as tone sequence control of repeater, frequency, and squelch disable functions.

5.15.12 D.C. Keying – CRT and Desktop Consoles - Each radio channel shall have available regulated D.C. keying currents of 15 ma and 6 ma. The D.C. control currents shall be provided for a loop resistance up to 10K ohms. Although as a default all channels shall not be supplied with DC keying capability, but pricing to add DC control on a per channel basis shall be provided.

5.15.13 Tone Keying- FPD and Desktop consoles - Each radio channel shall have available a tone sequence keying scheme that provides a High Level Guard Tone followed by a Function Tone followed by a Low Level Guard Tone.

5.15.14 "M Lead" Keying- FPD and Desktop consoles - Each radio channel shall be capable of providing Form A (normally open) dry contacts for transmitter keying.

5.15.15 One Sequence Tolerances - FPD and Desktop consoles - Tolerances for tone sequence control shall be within the following limits:

5.15.15 (a) All tone frequencies as specified within +/-1 Hz.

5.15.15 (b) All tone durations as specified within +/-5 ms or adjustable from 25 ms to 150 ms.

5.15.15 (c) High Level Guard Tone - 0dBm to -10 dB adjustable to meet line conditions

5.15.15 (d) Function Tone - 10 dBm +/-1 dB adjustable to meet line conditions.

5.15.15 (e) Low Level Guard Tone - 30 dBm +/-1 dB adjustable to meet line conditions.

5.15.16 Radio Channel Terminations - Each radio channel shall be capable of 2 wire or 4 wire operation. The type of termination shall be readily selectable on a per channel basis.

5.15.17 Parallel Operator Position Control of Radio Channels - The console common electronics shall be capable of parallel operator position control of common radio channels. All channel control switches and indicators shall be paralleled. Parallel operation shall be readily selectable on a per channel basis.

5.16 Design Criteria

5.16.1 The console electronic package design criteria are based upon the need for maximum reliability, expandability, and ease of service. To meet these criteria, the electronic packages described in the subsequent paragraphs must be totally solid-state, completely modular, and reflect state-of-the-art concepts in communication control design. Each operator position shall include applicable switches, status indicators, amplifiers, tone circuits, power supplies, meters, clocks, speakers, and hardware to perform the functions.

5.16.2 Panel Wiring/Remote Electronic Circuitry- FPD consoles

5.16.2 (a) The console electronic package shall have the capability of allowing the electronic circuitry (transmit/receive, amplifier, tone control, power supply, etc. modules) to be remoted at least 1000 feet from the operator position over standard 600 ohm twisted pairs. The interconnecting cable shall be at most an eight pair cable. The Vendor will supply all cabling and connectors

between the console common electronics and the punch blocks in the equipment room housing these electronics.

5.16.2 (b) The remoting of the electronic circuitry up to 1000 feet from the operator position shall not degrade the console performance outside the minimum standards specified herein. All console functions shall be operable as specified herein regardless of remoting up to 1000 feet.

5.16.2 (c) In addition to hard wired remoting of the electronic circuitry, the console electronic package shall also allow remoting of the electronic circuitry over standard telephone lines or multiplex channels on a fiber network or a microwave system. No more than three multiplex channels shall be required to perform this function. All remote data and audio paths shall be automatically monitored to ensure the continuous integrity of the paths. If a path is lost, both the dispatch position and any diagnostic printer and/or terminal shall receive a report.

5.16.2 (d) The remoting of the electronic circuitry over microwave channels shall not degrade the console performance outside the minimum standards set forth in these specifications. All console functions shall remain operable regardless of remoting the operator position.

5.16.3 Electronic Circuitry

5.16.3 (a) The electronic circuitry shall be contained on printed circuit modules which plug into a module rack or mother board. The plating material at the printed circuit module where plug-in contact is made shall be gold to provide maximum reliability.

5.16.3 (b) A transmit/receive module shall be provided with each operational channel. This module shall contain all of the circuits necessary to perform the functions described on a per channel basis.

5.16.3 (c) Sufficient modules shall be provided with each console electronic package to perform the functions that are common to the transmit/receive channels and all other functions.

5.16.4 Expandability - Options shall be easily expanded by the addition of plug-in printed circuit modules, programming, and control switches.

5.16.5 Maintainability

5.16.5 (a) The transmit/receive circuitry shall include one plug-in T/R module for each channel. All T/R modules shall be interchangeable between channels. The only T/R module changes required to exchange T/R modules between channels or electronic packages shall be the selection of options by means of programming switches mounted on the modules or PROM exchanges.

5.16.5 (b) The remainder of the console electronic package printed circuit modules shall be interchangeable between electronic packages.

5.16.5 (c) Each type of plug-in printed circuit module shall be keyed to be inserted only into the correct location in the module rack or mother board. Guide rails shall be used to ensure proper alignment of plug-in printed circuit modules. Each plug-in printed circuit module shall be equipped with an extractor to allow easy removal.

5.16.5 (d) It shall not be necessary to remove power from the console electronic package to change a plug-in module.

5.16.5 (e) All printed circuit modules shall be plainly marked with the module's function. All components shall be plainly identified on the printed circuit

modules. The module rack or motherboard position shall be plainly marked with the module's function. It shall not be necessary to use a drawing to locate components on printed circuit modules or printed circuit module positions.

5.16.6 Standards

5.16.6 (a) All equipment contained in the proposal shall meet or exceed the latest applicable standards of the Electronic Industries Association, Federal Communications Commission, and Underwriters Laboratory, and must conform to the OSHA of 1973 requirements for safe operation. In addition, where applicable, the equipment must satisfy the requirements of the local telephone company and input requirements of a Microwave System with respect to audio levels and control voltages.

5.16.6 (b) The console electronic equipment shall be rated for continuous operation. The console electronic package shall operate over an ambient temperature range of 0 degrees C. to +50 degrees C. without degradation in performance.

5.16.7 Power Supply

5.16.8 Input Voltage - 105 to 125 volts AC at 60 Hz, 120 volts AC nominal.

5.16.9 Noise - less than 120 millivolts peak to peak output.

5.16.10 Overload Protection - overload protection shall be provided such that variations in input voltage or output current shall not damage or degrade the operation of any console modules or components.

5.16.11 On-Off Switch - shall have a switch to turn input voltage on and off and have a power-on indicator.

5.17 Mechanical Requirements - The following specifications concern the mechanical aspects of the communications control console. The mechanical requirements of both the optional operator position furniture as well as the back-room common electronics are as follows.

5.17.1 Operator Position – Console Furniture - State supplied equipment may be installed in the operator position furniture along with the vendor's equipment. The State assumes the responsibility of installing the equipment in State supplied furniture. The vendor may bid the option to install the console. (All operator position furniture will be purchased separately.)

5.17.2 Labeling - All channels, controls and indicators shall be identified on the FPD screen. Keyboard switches which are used to control functions on the FPD should be clearly engraved to indicate their function. The identification shall show the purpose of the channel, control or indicator and be easily associated with the control or indicator. The legends or labels shall be designated by the user at the time of order.

5.17.3 Radio Channel and Receiver Voter Names - Each radio channel and or receiver voter channel shall be identified with an appropriate name - normally an abbreviation of the base station mountain top name and/or call sign which will be designated at the time of order. The FPD system shall be capable of displaying abbreviated names on the screen of at least eight characters in length. Merely giving a number to a radio channel or voter group is not acceptable.

5.17.4 Common Electronics- FPD Consoles - All common electronics shall be remoted from the console operator position. This equipment should be capable of remoting up to 1000 ft. from the operator position. The design of the common electronics package shall reflect a heavy reliance on modularity of construction. This modularity shall permit the console to be expanded, diminished, or reconfigured in future years depending on increased functions or consolidation of hardware based on system modernization. All equipment

supplied shall either be mounted in 19 inch wide EIA standard 90 inch tall aluminum equipment racks which are drilled and tapped to EIA standards (RS-310C) or supplied in seven foot enclosed equipment cabinets. (Racks or cabinet mounting will be specified with each purchase order) All equipment shall be supplied with all the necessary mounting hardware. Access to electronics for maintenance and service shall be accomplished through sliding rail arrangements, hinged mounting racks or circuit board extenders. Where the use of circuit board extenders is required, two extenders per console shall be supplied.

5.18 Training

5.18.1 Technician Training - the successful Vendor shall provide separate pricing for comprehensive training on the equipment proposed. The training shall include discussion of the following subjects as a minimum:

5.18.1 (a) Theory of operation and circuit analysis of each equipment module, a complete console electronic package, and parallel operation of multiple consoles.

5.18.1 (b) Troubleshooting procedures including fault isolation, terminal diagnostics, stage gain measurements, voltage tests, and other procedures to locate and replace faulty components.

5.18.1 (c) Level setting and other adjustment procedures for each equipment module, a complete console electronic package, and parallel operation of up to eight consoles.

5.18.1 (d) Programming of the central electronics cards and CRT positions.

5.18.2 Training Type and Location

5.18.2 (a) The training may be presented by either a resident instructor or a self-tutored training course.

5.18.2 (b) If an instructor is used, he must be intimately familiar with the design, operation, and maintenance of the equipment model proposed.

5.18.2 (c) The instructor shall present a training session in State supplied facilities at Phoenix, Arizona of at least 8 hours in duration. Actual dates for the class will be established by the purchasing agent. The training shall be completed within 130 days of receipt of purchase order.

5.18.2 (d) If the successful vendor elects to supply a self-tutored training course, one such course shall be provided and will become property of the State. The course shall make use of textbooks, film strips, video tapes or other means to provide comprehensive self-training of the equipment model proposed.

5.18.3 Dispatcher Training - The successful vendor shall also provide 1-day training to the dispatchers of any purchasing agencies. This training shall cover the operational aspects of the equipment. In situations where the communications center is a twenty-four hour operation, it will be necessary to repeat the training for each shift during the day(s).

5.18.4 Instruction Books - the instruction books to be furnished by the vendor shall be complete with all pages securely fastened together. The instruction books shall incorporate as a minimum the following:

5.18.4 (a) Complete description and ordering information of each individual unit and/or sub-assembly. A material guide shall contain the replacement part numbers and description of all components used. The parts lists shall be associated with their respective chassis, module, or kit wherein they are found. A total listing of parts without such groupings will not be acceptable.

5.18.4 (b) Complete intercabling diagram between each unit and/or sub-assembly.

5.18.4 (c) Complete outline and drawings and dimensions as well as mounting dimensions of all equipment.

5.18.4 (d) Voltage and resistance diagrams or tables of all units and/or sub-assemblies.

5.18.4 (e) Complete level setting instructions in step by step tabular form for entire assembly and all components capable of being adjusted.

5.18.4 (f) Parts location, drawings or pictorial, detailed top view of individual parts, units and/or sub-assemblies.

5.18.4 (g) Operational block diagrams of individual units and/or sub-assemblies.

5.18.4 (h) Complete schematic diagrams of individual units and/or sub-assemblies.

5.18.4 (i) In addition to schematics, etc., the manual shall contain the theory of operation of all active devices and circuits in sufficient detail to facilitate servicing.

5.18.4 (j) Drawings which are supplied must be reproduced by such means as to preclude fading to the point of illegibility if exposed to normal illumination for extended periods of time. A developed and fixed process or one of the various forms of printing by actual ink transfer are acceptable types.

5.18.4 (k) In order to provide a complete manual containing all schematics, level setting information, and operating instructions, the contractor shall prepare all of the information in book form with no drawings larger than the page size of the book. Drawings, which must be larger than a single sheet for legibility may be photographically reduced so that they are no larger than 11 inches high or printed on fold-out sections. This manual shall contain an index of all schematics, charts, and diagrams to insure that pages have not been removed. Sufficient information shall be contained in the index to permit reordering lost or mutilated pages.

5.18.4 (l) Two instruction manuals shall be furnished for every unit supplied and costs shall be included in the proposal price.

5.18.4 (m) One typical instruction manual shall be supplied with the proposal.

5.19 Recommended Maintenance Equipment

5.19.1 Any special meters, unique/non-standard test equipment, test cables, harnesses, circuit board extenders, or hand tools required for monitoring and/or maintenance of the communications control console electronic packages shall be listed separately with their itemized cost and shall be included in the total initial cost of the equipment.

5.20 Recommended Replacement Parts

5.20.1 Because of the critical function the communications control console serves, vendors must be capable of supplying all electronic package parts, including individual components and mechanical and electrical assemblies used in the equipment supplied, within 48 hours. The vendor shall supply a list of recommended spares in his proposal response. The vendor shall include a complete set of these recommended spare modules as well as a spare of all other modules and power supplies with the initial console purchase. The cost for this spare module set shall also be priced as a separate line item in the proposal response.

6.0 Generators

6.1 AC/DC power generators operating with diesel, gasoline or propane fuel. Indoor and Outdoor installations systems capable of handling extreme temperature of -50 degrees F up to 150 degrees

F. This includes but is not limited to Transfer Switches, panels, monitoring services, and controlling accessories inclusive of timing and sensing functions with associated hardware and software.

6.2 Requirements

6.2.1 Proposed product(s) must be rated for industrial use, home-use styles of generators will not be considered.

6.2.2 The proposal should include product(s) options from 10kw up to 400kw.

6.2.3 Product(s) offered must include all alarming equipment and software for remote monitoring.

6.2.4 Product(s) offered must be able to supply simple network management protocol (SNMP) and contact closure alarms.

6.2.5 Product(s) offered must have programmable exercise timers that can be set to transfer load capability.

7.0 Back-up Batteries (Including Solar)

7.1 Specifications

7.1.1 Telecom Applications – the State and/or Co-op Agencies require long life batteries (both voltage and solar) to support Agency efforts for providing power in multiple public communications applications, including but not limited to data centers, network operation centers, wireless, Microwave and mobile centers.

7.1.2 Product types for procurement:

7.1.2 (a) Modular Flooded Lead Acid

7.1.2 (b) Modular Flooded Lead Acid

7.1.2 (c) Mono-Block Valve Regulated Lead Acid

7.1.2 (d) Portable Radio

7.1.3 Renewable/ Solar Energy Product offerings must include the following:

7.1.3 (a) Benchmark data of Offeror's product to Industry Leading Life Cycle Data

7.1.4 Power Systems, DC Conversion

7.1.4 (a) Inclusive of AC/DC converters, battery chargers, DC/DC converters, along with low voltage disconnect DC breakers, power distribution panels and any additional associated hardware and software needed to operate.

7.1.5 The proposal must include float rates for the products being offered.

7.1.6 Offeror proposal to include system and module configuration requirements.

7.1.7 Must meet all UL industry requirements

7.1.8 Must withstand Operating temperature beyond 150 degrees F and temperature that drop below -50 degrees F.

7.1.9 Must provide performance data to support product viability.

8.0 Prefab Communications Shelters

8.1 General

8.1.1 Equipment shelters of various sizes specifically designed and constructed for extreme installation locations and to be installed with minimal soil disruption and without site-build foundation. This includes all required accessories and appurtenances, including antenna mast, RF shielding and grounding systems.

8.1.2 Vendor shall submit descriptive catalog product description to include all specifications.

8.2 Requirements

8.2.1 Prefab Communications shelters must meet State and National regulations.

8.2.2 Offeror to submit proposal for multiple dimensions that are offered to State and local public safety Agencies.

8.2.3 Offeror's proposal must address recommendations for transportation and off-loading.

8.2.4 HVAC system requirements should be detailed in the proposal submitted.

8.2.5 Electrical requirement for each prefab communication shelter offering should be listed in the proposal.

8.2.6 Proposed lighting systems should be included in the offer.

8.3 Installation and service

8.3.1 Offeror must provide on-site installation and set-up service as part of the proposal. This pricing should be included as separate line item within the pricing proposal.

8.3.2 R-56 standards must be followed in the proposed construction of any prefab communications shelters.

8.3.3 If on-site installation is required, Contractor(s) must be able to pass a background check.

8.4 Pricing

8.4.1 Pricing should include discount off list catalog pricing plus additional options on an individual list item basis for upgrades that might add to discounted price listed in catalog.

8.5 Warranty

8.5.1 All offerings must include a minimum five (5) year warranty period.

9.0 Service

9.1 The services that may be offered in correlation with the equipment listed above are categorized as follows:

9.2 Design/Engineering

9.2.1 The Contractor(s) shall clearly define and communicate to the State what is specifically included in their Design Services.

9.3 Managed Services - considered a service subscription.

9.3.1 The Contractor(s) shall clearly define and communicate to the State what is specifically included in their Managed Services. Examples of Managed Services include: 24x7x365 technical support, network monitoring, alarm monitoring, service ticket generation, performance management, system provisioning, system updates, end-to-end event monitoring, security monitoring, software maintenance and updates, annual preventative maintenance, and onsite support.

9.3.2 The Contractor(s) shall clearly define and communicate qualifications for any system or equipment being considered for Managed Services.

9.4 Field Service Repair and Maintenance – considered as needed, or one-time services.

9.4.1 The Contractor(s) shall clearly define and communicate guaranteed time of repair or restoration and qualifications for any system or equipment being considered for maintenance support.

9.4.2 The Contractor(s) shall perform work in accordance with the manufacturer's recommendation to ensure it is performing to all defined technical and environmental specifications for the system.

9.4.3 In addition to maintenance of new equipment purchases, the Contractor(s) shall also offer maintenance of legacy equipment. Legacy equipment defined as any existing public communications equipment and its associated supplies and/or accessories that have been purchased prior to the RFP issuance and resulting Contract Award.

9.5 Installation

9.5.1 Time of Purchase of new equipment

9.5.2 Previously purchased equipment

9.5.3 The Contractor(s) shall also conduct initial preventative maintenance ensuring performance begins at the optimal level.

9.6 Integration

9.6.1 Integration Services shall be offered at an hourly rate by the Contractor(s) unless otherwise specified in the SOW defined above as part of the equipment installation. The Contractor(s) shall clearly list and communicate to the State what is specifically included in their integration services, if applicable.

10.0 Consultation and Third-Party Oversight

10.1 The State is also looking to solicit proposals from qualified, vendor independent, full service firms who can provide third party oversight on behalf of the State of Arizona. Any offer of services must comply with the following:

- Demonstrate independence of any manufacturer, software provider, or vendor.
- Demonstrate experience and knowledge of all aspects of public safety operations as they relate to communications and interoperability needs
- Demonstrate mission critical communications system design experience in the public safety arena
- Demonstrate knowledge and experience with contemporary and emerging wireless mission critical communications technologies utilized in the public safety arena including:
    - Mission critical radio systems-infrastructure, subscriber hardware, RF system design, radio propagation, frequency research
    - Microwave and RF control link design and specification
    - Voice logging
    - Paging and Alerting systems
    - Radio interoperability
    - Radio dispatch console systems
- Demonstrate familiarity and expertise in FCC regulations, licensing and frequency availability research
- Demonstrate in-house subject matter experts, telecommunications specialists, state and local policy experts, and project managers with APCO Project 25 implementation experience.
- Demonstrate experience in the identification, evaluation and recommendation of appropriate sites and infrastructure for mission critical communications towers and facilities.

- Demonstrate experience in structured wiring plans and electrical and power system design relative to Public Safety and Mission critical RF systems.
- Demonstrate experience, establishing continuity of operations (COOP) plans, planning, and implementation of disaster recovery solutions, and establishing supporting standard operating procedures (SOPs) and policies that enhance system reliability, resiliency, and redundancy.
- Demonstrate experience with providing consulting, systems engineering and architecture services for both urban and rural mission critical communications systems.
- The firm must have at least one telecommunications specialist certified in industry accepted site standards such as Motorola R56.
- The firm must demonstrate that it follows accepted industry standards (i.e., Project Management Institute) standards and practices for management of projects.
- The firm must demonstrate knowledge in the trends and directions of mission critical radio networks, automated systems, facilities and operations.
- Demonstrate experience and capability of providing ongoing service and support throughout the lifecycle of network and associated devices and peripherals

EXHIBITS TO THE SCOPE DOCUMENT

NO EXHIBITS FOR THIS SOLICITATION

End of section 2-A

SECTION 2-B: Pricing Document

1.0 Compensation

Contractor will be compensated for the satisfactorily carrying out its obligations under the Contract by the method indicated by the "●" mark below:

●	Contracted Labor Rates (refer to paragraph 1.13 below)
●	Discount Off List or Catalog (refer to paragraph 1.25 below)

1.1 CONTRACTED LABOR RATES. The contracted labor rates are the fully-burdened and marked-up billing rates for Contractor's labor scheduled in Exhibit 1 to this Pricing Document.

1.1.1 The rates are deemed to be inclusive of the actual gross wages plus all:

(a) applicable payroll taxes, non-payroll employer burden, workers' compensation contributions and health and welfare benefit contributions;

(b) retirement or other pension contributions, vacation, sick time or other paid leave allowances and the like;

(c) required home office support, corporate or subordinate licenses or registrations, corporate insurance, professional association fees, advertising, time and travel by any of Contractor's personnel other than billable personnel and any bonuses or other incentives for all personnel (including billable Personnel);

(d) insurance coverages to be provided by Contractor under the Contract; and

(e) profit.

1.1.2 The rates are not subject to overtime or other premium time unless expressly stated otherwise in the Pricing Document or a relevant Annex thereto.

1.1.3 The rates include all transaction privilege and other sales/use taxes, including any gross receipts taxes on services, unless expressly stated otherwise in the Pricing Document or a relevant Annex thereto.

1.1.4 Reimbursable items consist of three components:

(a) *Site Services, Logistics, and Utilities*. State and Contractor shall each provide those items of site services, logistics and utilities that are assigned to them in Attachment 4 to this Pricing Document. Excluding only those item expressly indicated as being provided by State, provided by others, or a reimbursable item, Contractor shall provide all services, equipment, tools, and logistics necessary for its personnel and otherwise as required to carry out the Work and compensation for all those is deemed to be included in the contractual fee mark-up (if any applies).

i. For items indicated to be paid on a "unit rate" basis, Contractor shall submit a worksheet with each application for payment showing the actual amount of payment requested for these items, which amount shall not exceed the unit rate multiplied by the total quantity (i.e., Contractor is "at risk" for costs it incurs that are in excess of the extended value unless State has issued a Change Order for the excess.

ii. For items indicated to be paid on a "cost" basis, Contractor shall request reimbursement for the actual cost of such items at least monthly and shall provide the necessary back-up documentation, including receipts or invoices and timesheets (if applicable).

iii. For items indicated to be paid on a "lump sum" basis, Contractor shall request payment for the completed proportion of such items at least monthly.

(b) *Personnel-Related Expenses*. State will only reimburse for those items of personnel-related expense expressly indicated in Attachment 4 to this Pricing Document as a reimbursable item, and it is agreed that the costs of all other such expenses applicable to its personnel and otherwise as required to carry out the Work are adequately compensated in the contractual fee mark-up (if any applies).

i. For items to be paid on a "unit rate" basis, Contractor shall submit a worksheet with each application for payment showing the actual amount of payment requested for these items, which amount shall not exceed the unit rate multiplied by the total quantity (i.e., Contractor is "at risk" for costs it incurs that are in excess of the extended value unless State has issued a Change Order for the excess.

ii. For items to be paid on a "cost" basis, Contractor shall request reimbursement for the actual cost of such items at least monthly and shall provide the necessary back-up documentation, including receipts or invoices (if applicable). All reimbursements shall be strictly subject to State's travel policy, which is available at https://gao.az.gov/travel.

iii. Contractor must obtain State's written approval prior to booking or going on any reimbursable travel.

iv. Contractor will be reimbursed at the current Travel Policy rates.

v. Contractor shall itemize all per diem and lodging charges.

vi. For items to be paid on a "lump sum" basis, Contractor shall request payment for the applicable proportion of such items at least monthly.

1.2 DISCOUNT OFF LIST OR CATALOG. A discount off list or catalog means a percentage discount to be applied to a base price for from one or more contractually-established price lists against published catalogs. The applicable discounts are scheduled in Exhibit 1 to this Pricing Document.

1.2.1 Unless specified otherwise in the Pricing Document, base price is the price that is most widely offered to general customers at the time of the Order.

1.2.2 The catalogs used to establish base price are specified otherwise in the Pricing Document. If nothing is so specified, then the commercially available catalogs published by Contractor or Subcontractor to a dealer or reseller network for the covered materials or services are to be used.

1.2.3 Each catalog must:

(a) bear the applicable State contract number;

(b) list all materials or services Contractor is authorized to sell under the Contract;

(c) not contain any items that are excluded from the Contract;

(d) provide ordering information and contact information for customer support.

1.2.4 Each catalog and its accompanying price list must include for each item:

(a) a part or model number, if applicable;

(b) a complete and accurate description of the item;

(c) the manufacturer's suggested retail price (MSRP) or Contractor's list price;

(d) a stock keeping unit (SKU) number (SKU) , if applicable;

(e) the item's unit of measure (UOM), if applicable; and

(f) the quantity in the unit of measure (QUOM), if applicable.

1.2.5 Contractor shall provide and maintain concurrent and identical electronic and hardcopy versions of all contracted price lists and catalogs.

(a) The electronic versions are to be provided as an Amendment to the Contract.

i. State, at its discretion, may host Contractor's electronic price lists and catalogs directly, or may link through ProcureAZ as a punch-out.

ii. Regardless of the number and types of links to Contractor's electronic price lists and catalogs, Contractor shall ensure that all Eligible Agencies and Co-Op Buyers are only able to access one unified set of data.

(b) Contractor shall supply sufficient, current hardcopy catalogs and price lists price lists to applicable Eligible Agencies at Contract commencement, and provide prompt hardcopy notice of any changes to list/catalog holders as they occur. Contractor shall not change State or any Eligible Agency (or any Co-Op Buyer, if applicable) for lists/catalogs or updates.

2.0 Pricing

2.1 CONTRACTOR'S BEST PRICING. Supplier warrants that, for the term of the Contract, the prices and discounts set out in Exhibit 1 to this Pricing Document, including any subsequent agreed amendment to it (the "Contract Pricing"), will be equal to or better than the lowest prices and largest discounts, both separately and in combination, at which Contractor sells equivalent items of equipment and materials.

2.1.1 That price-plus-discount equivalence ("Contractor's Best Pricing") is intended to be irrespective of whether or not those other sales have special purchase terms, conditions, rebates or allowances.

2.1.2 If Contractor's Best Pricing for equivalent items of equipment and materials is better than the Contract Pricing, then Contractor agrees to adjust the Contract Pricing to match the Contractor's Best Pricing for all sales related to the Contractor made after the date when the Contractor's Best Pricing was first better than the Contract Pricing.

2.1.3 For clarification of intent, that date is intended to be the date when the difference first occurred, which might have been before the difference was first identified. If it was before, then Supplier agrees to charge at less than the Contract Pricing until the extended difference that would have been realized (i.e., if the Contractor's Best Pricing had been applied when it should have been) has been settled.

2.2 PRICING-ALL-INCLUSIVE:

2.2.1 Pricing is all-inclusive, including any ancillary fees and costs required to accomplish the Scope of Work and all aspects of Contractor's offer as accepted by State. Details of service not explicitly stated in the Scope of Work or in Contractor's Offer, but necessarily a part of, are deemed to be understood by Contractor and included herein. All administrative, reporting, or other requirements, all overhead costs and profit and any other costs toward the accomplishment of the requirements in the Contract are included in the pricing provided.

2.3 PRICE INCREASES:

2.3.1 The SPO may review a fully documented request for a price increase. The requested increase shall be in writing and be based upon a cost increase to the contractor that was clearly unpredictable at the time of the offer and is directly correlated to the price of the product concerned. Contractor must provide conclusive evidence of a need for any price increases such as being substantiated by the Producer Price Index, Consumer Price Index, or similar pricing guide.

(a) Initial Contract prices will be honored for one year after award of Contract.

(b) All written requests for price adjustments made by the contractor shall be initiated thirty (30) days in advance of any desired price increase to allow State sufficient time to make a fair and equitable determination to any such requests. This may be waived upon proper documentation demonstrating the urgency of the request.

(c) All price adjustments will be implemented by a formal contract change order. State shall determine whether the requested price increase or an alternate option is in the best interest of State.

2.4 PRICE REDUCTIONS:

2.4.1 Price reductions shall by immediately passed along to State and may be submitted in writing to State for consideration at any time during the Contract period. The contractor shall offer State a price reduction on the Contract product(s) concurrent with a published price reduction made to other customers. State at its own discretion may accept a price reduction. The price reduction request shall be in writing and include documentation showing the actual reduction of cost. Sales promotions requests shall include difference in pricing, begin, and end date of promotion along with the products covered.

2.5 ADDITIONAL CHARGES:

2.5.1 Any charges or fees not delineated in the Contract may not be added, billed, or invoiced under the Contract. All additional work shall be approved by Eligible Agency in advance and be in accordance with the contract rate.

2.6 TRAVEL.

2.6.1 Contractor shall get written approval prior to any travel under the Contract in which reimbursement of expenses will be requested. Contractor will be reimbursed for actual expenses incurred in accordance with the current rates specified in State's Travel Policy. Contractor shall itemize all per diem and lodging charges. State Travel Policy, including State rates, may be located at https://gao.az.gov/travel. The Eligible Agency shall reject any claim for travel reimbursement without prior written approval.

2.7 DELIVERY

2.7.1 Unless stated otherwise in the contract, all prices shall be F.O.B. Destination and shall include all freight delivery and unloading at the destination.

3.0 Funding

No particular funding considerations apart from paragraph 4.3 of the Uniform Terms and Conditions [*Availability of Funds*] have been identified as of the Solicitation date.

4.0 Invoicing

4.1 INVOICES GO TO BUYING ENTITY. Contractor shall submit all billing notices or invoices to the ordering Eligible Agency or Co-Op Buyer at the address indicated on the applicable Order document.

4.2 MINIMUM INVOICE REQUIREMENTS. Every invoice must include the following information:

Item	Required
Bill-to name and address	●
Contractor name and contact information	●
Remit-to address	●
State contract number	●
Order number (typically the ProcureAZ PO #)	●
Invoice number and date	●
Date the items shipped or services performed	●
Applicable payment terms	●
Contract line item number	●
Contract line item description	●
Quantity delivered or performed	●
Line item unit of measure	●
Item price	●
Extended pricing	●
Discount off list or catalog	●
Taxes *(as a separate invoice line item)*	●
Upcharge shipping/freight, etc. *(as a separate invoice line item)*	Materials only
Total invoice amount due	●

4.3 NO INVOICE WITHOUT AUTHORIZATION. Contractor shall not seek payment for any:

1. Materials or Services that have not been authorized on an acknowledged Order;
2. expediting, overtime, premiums, or upcharges absent State's express prior approval; or
3. Materials or Services that are the subject of a Contract Amendment or Change Order that has not been fully signed.

4.4 PRE-INVOICE REVIEW. Upon Eligible Agency request and shortly before Contractor is scheduled to submit each invoice, the parties' representatives shall meet informally to review any issues relevant to that upcoming invoice so that the formal invoice process is thereby facilitated and made more efficient.

4.5 SUBMITTING INVOICES. Contractor shall submit an invoice to the ordering Eligible Agency or Co-Op Buyer using the form provided or required by the ordering Eligible Agency or Co-Op Buyer. Every invoice must be signed by Contractor's authorized representative and accompanied by all supporting information and documentation required by the Contract and applicable laws.

4.6 DEFECTIVE INVOICES. Without prejudice to its other rights under the Contract or further obligation to Contractor, the ordering Eligible Agency or Co-Op Buyer may, at its discretion, reject any materially defective invoice.

4.6.1 The ordering Eligible Agency or Co-Op Buyer shall notify Contractor within 5 (five) business days after receipt if it determines an invoice to be materially defective.

4.6.2 Invoices will be deemed automatically rejected upon delivery if they:

4.6.2 (a) are sent to an incorrect address;

4.6.2 (b) do not reference the correct State contract number; or

4.6.2 (c) are payable to any Person other than the Contractor.

4.6.3 The ordering Eligible Agency or Co-Op Buyer will have no obligation to pay against a defective invoice unless and until Contractor has re-submitted it free of defects.

4.7 INVOICING FOR TASK ORDERS. For task order Services, invoices must include the following information as applicable to the relevant task order being invoiced against:

1. substantiation of hours worked using:
    a. a detailed daily timesheet;
    b. itemization to the task level; and
    c. breakdown by service area (if the Contract covers more than one area) and Contract Amendment (if any apply);
2. authorizations and receipts for all allowable reimbursable items being invoiced; and
3. Contractor's certification that the invoice has been examined and to the best of Contractor's knowledge and belief the invoiced amounts are entitled, correct, and accurate as can be demonstrated by the contractually-required books and records upon State's demand.

5.0 Payments

5.1 PAYMENT. The applicable Eligible Agency or Co-Op Buyer shall pay undisputed amounts due to Contractor within the time period specified in Section 18.1 of the Special Terms and Conditions

5.2 JOINT CHECKS OR DIRECT PAY. applicable Eligible Agency or Co-Op Buyer may, but is under no obligation to, pay by joint check or to pay directly to any Subcontractor or other creditor to whom any portion of Contractor's requested payment is owed.

5.3 RECOVERY OF OVER-PAYMENT. If applicable Eligible Agency or Co-Op Buyer determines that an over-payment has been made to Contractor on any prior invoice, it shall inform Contractor of the amount and date of the over-payment and may deduct the over-paid amount from amounts then or thereafter due to Contractor.

5.4 PAYMENTS TO SUBCONTRACTORS. Contractor shall make payment of all undisputed amounts due to Subcontractors within thirty (30) days of receipt of funds from applicable Eligible Agency or Co-Op Buyer applicable to their services.

5.5 PURCHASING CARD. applicable Eligible Agency or Co-Op Buyer may pay invoices for some or all Orders using a purchasing card. Any and all fees related to payment using a Purchasing Card are the responsibility of Contractor. Unless otherwise stated in the Contract there will be no additional fees or increase in prices associated with this method of payment.

5.6 AUTOMATED CLEARING HOUSE. applicable Eligible Agency or Co-Op Buyer may pay invoices for some or all Orders through an Automated Clearing House (ACH). In order to receive payments in this manner from

Eligible Agencies, Contractor must complete an ACH Vendor Authorization Form (form GAO-618) within 30 (thirty) days after the effective date of the Contract. The form is available online at:

https://gao.az.gov/afis/vendor-information

End of Section 2-B

SECTION 2-C: Special Terms and Conditions

The Special Terms and Conditions modify the Uniform Terms and Conditions and its Appendices. It can modify them by replacing, deleting, appending to, or revising the text of an existing provision or by inserting a new paragraph into an existing article. No other document modifies or adds to the Uniform Terms and Conditions, except as may subsequently be otherwise and expressly agreed and incorporated by Contract Amendment.

1.0 Definition of Terms

As used in the Contract, the terms listed below are defined as follows:

1.1. Co-Op Buyer

"Co-Op Buyer" means a member of the State Purchasing Cooperative that has entered into a "Cooperative Purchasing Agreement" with the Arizona Department of Administration State Procurement Office under A.R.S. § 41-2632. Unless there is an applicable Cooperative Purchasing Agreement in effect at the time, a State Purchasing Cooperative member cannot be a Co-Op Buyer. For reference, "Co-Op Buyer" is to be construed as encompassing "eligible procurement unit" under A.A.C. R2-7-101(23).

NOTE: Membership in the State Purchasing Cooperative is open to all Arizona political subdivisions, including cities, counties, school districts, and special districts. Membership is also available to non-profit organizations, other state governments, the federal government and tribal nations. For reference, "non-profit organizations" are defined in A.R.S. § 41-2631(4) as any nonprofit corporation as designated by the IRS under section 501(c)(3) through 501(c)(6) of the tax code.

1.2. Eligible Agency

If the Special Terms and Conditions indicates that the Contract is a "single-agency" contract, then "Eligible Agency" means the particular State of Arizona agency, university, commission, or board identified therein. If the Special Terms and Conditions indicates that the Contract is a "statewide" contract, then "Eligible Agency" means any State of Arizona department, agency, university, commission, or board.

2.0 Contract Interpretation

No modifications to uniform terms and conditions section

3.0 Contract Administration and Operation

3.1 Term of Contract

The term of the Contract will commence on the date indicated on the Acceptance and continue for five (5) years with an optional additional five (5) year term with annual renewal(s) for a total max term of ten (10) years unless canceled, terminated, or permissibly extended.

3.2 Statewide Contract Provisions

The Contract is a "statewide" contract for multiple purchases, projects, or assignments, and can be purchased against by some or all Eligible Agencies and any Co-Op Buyers that elect to participate. Even if only one Eligible Agency needs or elects to purchase against the Contract, it is to be construed as being a "statewide" contract hereunder.

The Contract is an indefinite delivery, indefinite quantity (ID/IQ) type of contract; it is to be construed as a "delivery order" sub-type of ID/IQ contract to the extent the Work is Materials, and a "task order" sub-type to the extent the Work is Services.

1. Contractor shall verify if an ordering entity is a bona fide Co-Op Buyer before selling Materials to or providing Services for them under the Contract. The current list of Co-Op Buyers is available on the State Procurement Office website:

https://spo.az.gov/procurement-services/cooperative-procurement/coop-usage-report

2. Contractor shall sell to Co-Op Buyers at the same price and on the same lead times and other terms and conditions under which it sells to Eligible Agencies, with the sole exception of any legitimately additional costs for extraordinary shipping or delivery requirements if the Co-Op Buyer is having Materials delivered or installed or Services performed at locations not contemplated in the contracted pricing (e.g. delivery to a location outside Arizona).
3. Contractor shall pay State an administrative fee against all Contract sales to Co-Op Buyers, as provided for under A.R.S. § 41-2633. The fee rate is one (1%) percent. Failure to remit the administrative fees is a material breach of contract, and will entitle State to its remedies under Article 8 and its right to terminate for default under Article 9. Method of calculation, payment procedures, and other details are provided on the State Procurement Office website:

   https://spo.az.gov/contractor-resources/statewide-contracts-administrative-fee
4. Contractor shall submit to State a quarterly usage report documenting all Contract sales to both Eligible Agencies and Co-Op Buyers, itemized separately. Contractor shall further itemize divisions, groups or areas within a given Eligible Agency if they place Purchase Orders independently of each other. Failure to submit the report is a material breach of contract, and will entitle State to its remedies under Article 8 and its right to terminate for default under Article 9. Contractor shall submit the report using the forms and following the instructions on the State Procurement Office website:

   https://spo.az.gov/contractor-resources/statewide-contracts-administrative-fee
5. Contractor shall acknowledge each Purchase Order from Eligible Agencies within 1 (one) business day after receipt by either: (a) “approving” the Purchase Order electronically in ProcureAZ, which will indicate Contractor’s unqualified acceptance of the Purchase Order as-issued; or (b) “rejecting” the Purchase Order electronically in ProcureAZ, with a concurrent explanation by email to relevant originator as to the reason for rejecting it. By way of reminder, the only grounds on which Contractor may reject or refuse a Purchase Order are those set out in subparagraph 3.12.3 [*Orders are Obligatory*]. Unless and until Contractor has approved the Purchase Order in ProcureAZ, it will have no effect under the Contract and will not oblige either State or Contractor. If the relevant Eligible Agency explicitly instructs at the time that a verbal acceptance is sufficient because of urgency or other unusual circumstances and Contractor duly gives its verbal acceptance, then Contractor will be deemed to have accepted the Purchase Order immediately upon commencing performance, provided that, Contractor must follow-up its verbal acceptance by accepting the Purchase Order electronically in ProcureAZ within 3 (three) business days. Contractor shall thereafter be barred from subsequently rejecting the Purchase Order in ProcureAZ and if it does so the rejection will be void.
6. Contractor shall acknowledge each Purchase Order from Co-Op Buyers in conformance with each buyer’s instructions given at the time of ordering or in any supplemental participating agreement Contractor might have with them. Purchase Orders from Co-Op Buyers create no obligation on State’s part, since they are entirely

between the Co-Op Buyer and Contractor. That notwithstanding, Contractor's obligation under the Contract is to service Co-Op Buyers commercially as though they were with an Eligible Agency, and Contractor's refusal to do so would be a material breach of the Contract.

3.3 Multiple-Use Provisions

Eligible Agencies may issue Purchase Orders for Services in several forms, all of which become final and effective by a "Release Purchase Order" in ProcureAZ. Purchase Orders issued by Co-Op Buyers will be in whatever form the Co-Op Buyer normally uses. Regardless of origin, Purchase Orders must cite the State contract number to be valid. State may, at its discretion in each instance, determine the scope, schedule, and price for each Purchase Order in any of the following ways:

1. By choosing some or all of the Materials or Services items covered by the Contract for which a price is established in the Pricing Document, then preparing an Purchase Order using those prices (e.g., filling out a purchase order form), and sending it to Contractor.
2. By instructing Contractor to provide a comprehensive proposal of item quantities, combinations, etc., or services hours, personnel, etc., for a defined scope using those established prices as a basis, then validating and negotiating the proposal with Contractor and issuing an Purchase Order if and when reaching agreement.
3. As described in *(2)* above but requesting the proposal from both Contractor and other vendors who are contracted within the applicable scope categories and locations, either sequentially or concurrently, then selecting the proposal or proposals combination that is most advantageous to State.
4. As described in *(3)* above but introducing ad-hoc commercial competition by making the selection and ordering conditional on obtaining more favorable prices than the contractually-established ones.

When evaluating the proposals under *(3)* and *(4)* above, State may select based on price (for example, a quoted number of hours times the contracted or improved rate plus a fixed amount for incidentals), by experience and qualifications (for example, having an office nearer the required work location), or whatever combination thereof it determines is most appropriate to the work in question.

4.0 Costs and Payments

4.1 Proposal Costs

Costs Incurred During Proposal Development. The State will not be responsible for any cost incurred during the period of proposal development, including but not limited to On-Site Visits, Pre-Offer Conferences, Demonstrations and any other costs incurred by the Offeror in preparation for Bid Offering.

5.0 Contract Changes

No modifications to uniform terms and conditions section.

6.0 Risk and Liability

6.1 Contractor Insurance

Indemnification Clause

To the fullest extent permitted by law, Contractor shall defend, indemnify, and hold harmless the State of Arizona, and its departments, agencies, boards, commissions, universities, and any jurisdiction or agency issuing permits for any work included in the project, and their respective directors, officers, officials, agents and employees (hereinafter referred to as "Indemnitee") from and against any and all claims, actions, liabilities, costs, losses, or expenses, (including reasonable attorney's fees), (hereinafter collectively referred to as "Claims") arising out of actual or alleged bodily injury or personal injury of any person (including death) or loss or damage to tangible or intangible property caused, or alleged to be caused, in whole or in part, by the negligent or willful acts or omissions of Contractor or any of Contractor's directors, officers,

agents, employees, volunteers or subcontractors. This indemnity includes any claim or amount arising or recovered under the Workers' Compensation Law or arising out of the failure of Contractor to conform to any federal, state or local law, statute, ordinance, rule, regulation or court decree. It is the specific intention of the parties that the Indemnitee shall, in all instances, except for Claims arising solely from the negligent or willful acts or omissions of the Indemnitee, be indemnified by Contractor from and against any and all Claims. It is agreed that Contractor will be responsible for primary loss investigation, defense and judgment costs where this indemnification is applicable. This indemnification will survive the termination of the above listed contract with the Contractor.

This indemnity shall not apply if the contractor or sub-contractor(s) is/are an agency, board, commission or university of the State of Arizona.

Insurance Requirements

Contractor and subcontractors shall procure and maintain, until all of their obligations have been discharged, including any warranty periods under this Contract, insurance against claims for injury to persons or damage to property arising from, or in connection with, the performance of the work hereunder by the Contractor, its agents, representatives, employees or subcontractors.

The Insurance Requirements herein are minimum requirements for this Contract and in no way limit the indemnity covenants contained in this Contract. The State of Arizona in no way warrants that the minimum limits contained herein are sufficient to protect the Contractor from liabilities that arise out of the performance of the work under this Contract by the Contractor, its agents, representatives, employees or subcontractors, and the Contractor is free to purchase additional insurance.

Minimum Scope and Limits of Insurance

Contractor shall provide coverage with limits of liability not less than those stated below.

1. **Commercial General Liability (CGL) – Occurrence Form**

Policy shall include bodily injury, property damage, and broad form contractual liability coverage.

• General Aggregate	$2,000,000
• Products – Completed Operations Aggregate	$1,000,000
• Personal and Advertising Injury	$1,000,000
• Damage to Rented Premises	$50,000
• Each Occurrence	$2,000,000

The policy shall be endorsed, as required by this written agreement, to include the State of Arizona, and its departments, agencies, boards, commissions, universities, officers, officials, agents, and employees as additional insureds with respect to liability arising out of the activities performed by or on behalf of the Contractor.

Policy shall contain a waiver of subrogation endorsement, as required by this written agreement, in favor of the State of Arizona, and its departments, agencies, boards, commissions, universities, officers, officials, agents, and employees for losses arising from work performed by or on behalf of the Contractor.

2. **Business Automobile Liability**

Bodily Injury and Property Damage for any owned, hired, and/or non-owned automobiles used in the performance of this Contract.

- Combined Single Limit (CSL) $1,000,000

Policy shall be endorsed, as required by this written agreement, to include the State of Arizona, and its departments, agencies, boards, commissions, universities, officers, officials, agents, and employees as additional insureds with respect to liability arising out of the activities performed

by, or on behalf of, the Contractor involving automobiles owned, hired and/or non-owned by the Contractor.

Policy shall contain a waiver of subrogation endorsement as required by this written agreement in favor of the State of Arizona, and its departments, agencies, boards, commissions, universities, officers, officials, agents, and employees for losses arising from work performed by or on behalf of the Contractor.

3. **Workers' Compensation and Employers' Liability**

•	Workers' Compensation	Statutory
•	Employers' Liability	
o	Each Accident	$1,000,000
o	Disease – Each Employee	$1,000,000
o	Disease – Policy Limit	$1,000,000

Policy shall contain a waiver of subrogation endorsement, as required by this written agreement, in favor of the State of Arizona, and its departments, agencies, boards, commissions, universities, officers, officials, agents, and employees for losses arising from work performed by or on behalf of the Contractor.

This requirement shall not apply to each Contractor or subcontractor that is exempt under A.R.S. § 23-901, and when such Contractor or subcontractor executes the appropriate waiver form (Sole Proprietor or Independent Contractor).

4. **Professional Liability (Errors and Omissions Liability)**

•	Each Claim	$2,000,000
•	Annual Aggregate	$2,000,000

In the event that the Professional Liability insurance required by this Contract is written on a claims-made basis, Contractor warrants that any retroactive date under the policy shall precede the effective date of this Contract and, either continuous coverage will be maintained, or an extended discovery period will be exercised, for a period of two (2) years beginning at the time work under this Contract is completed.

The policy shall cover professional misconduct or negligent acts for those positions defined in the Scope of Work of this contract.

4. **Technology Errors & Omissions Insurance**

•	Each Claim	$2,000,000
•	Annual Aggregate	$2,000,000

Such insurance shall cover any, and all errors, omissions, or negligent acts in the delivery of products, services, and/or licensed programs under this contract.

Coverage shall include copyright infringement, infringement of trade dress, domain name, title or slogan.

In the event that the Tech E&O insurance required by this Contract is written on a claims-made basis, Contractor warrants that any retroactive date under the policy shall precede the effective date of this Contract and, either continuous coverage will be maintained or an extended discovery period will be exercised for a period of two (2) years, beginning at the time work under this Contract is completed.

5. **Network Security (Cyber) and Privacy Liability**

•	Each Claim	$2,000,000
•	Annual Aggregate	$2,000,000

Such insurance shall include, but not be limited to, coverage for third party claims and losses with respect to network risks (such as data breaches, unauthorized access or use, ID theft, theft of data) and invasion of privacy regardless of the type of media involved in the loss of private information, crisis management and identity theft response costs. This should also include breach notification costs, credit remediation and credit monitoring, defense and claims expenses, regulatory defense costs plus fines and penalties, cyber extortion, computer program and electronic data restoration expenses coverage (data asset protection), network business interruption, computer fraud coverage, and funds transfer loss.

In the event that the Network Security and Privacy Liability insurance required by this Contract is written on a claims-made basis, Contractor warrants that any retroactive date under the policy shall precede the effective date of this Contract and, either continuous coverage will be maintained, or an extended discovery period will be exercised for a period of two (2) years beginning at the time work under this Contract is completed.

The policy shall be endorsed, as required by this written agreement, to include the State of Arizona, and its departments, agencies, boards, commissions, universities, officers, officials, agents, and employees as additional insureds with respect to vicarious liability of the insured arising out of the activities performed by or on behalf of the Contractor.

Policy shall contain a waiver of subrogation endorsement, as required by this written agreement, in favor of the State of Arizona, and its departments, agencies, boards, commissions, universities, officers, officials, agents, and employees for losses arising from work performed by or on behalf of the Contractor.

6. Installation Floater

- Coverage amount is $___TBD At Award

Policy shall contain an Additional Insured endorsement, as required by this written agreement, in favor of the State of Arizona, and its departments, agencies, boards, commissions, universities, officers, officials, agents, and employees.

The State of Arizona and the Department shall be named as loss payee as its interest may appear.

Coverage shall be written on an all risk, replacement cost basis and shall include coverage for flood and earth movement as well as coverage for losses that may occur during equipment testing/commissioning.

Policy shall be maintained until whichever of the following shall first occur: (1) final payment has been made; or, (2) until no person or entity, other than the State of Arizona, has an insurable interest in the property required to be covered.

Policy shall be endorsed such that the insurance shall not be canceled or lapse because of any partial use or occupancy by the State of Arizona.

The Installation Floater must provide coverage from the time the equipment/material becomes the responsibility of the Contractor and shall continue without interruption during the installation, testing and commissioning, including any time during which the equipment/material is being transported to the installation site, or awaiting installation, whether on or off site.

Policy shall contain a Waiver of Subrogation endorsement, as required by written agreement, in favor of the State of Arizona, and its departments, agencies, boards, commissions, universities, officers, officials, agents, and employees for losses arising from work performed by the Contractor for the State of Arizona.

Contractor is responsible for the payment of all deductibles under the Installation Floater.

Additional Insurance Requirements

The policies shall include, or be endorsed to include, as required by this written agreement, the following provisions:

The Contractor's policies, as applicable, shall stipulate that the insurance afforded the Contractor shall be primary and that any insurance carried by the Department, its agents, officials, employees or the State of Arizona shall be excess and not contributory insurance, as provided by A.R.S. § 41-621 (E).

Insurance provided by the Contractor shall not limit the Contractor's liability assumed under the indemnification provisions of this Contract.

Notice of Cancellation

Applicable to all insurance policies required within the Insurance Requirements of this Contract, Contractor's insurance shall not be permitted to expire, be suspended, be canceled, or be materially changed for any reason without thirty (30) days prior written notice to the State of Arizona. Within two (2) business days of receipt, Contractor must provide notice to the State of Arizona if they receive notice of a policy that has been or will be suspended, canceled, materially changed for any reason, has expired, or will be expiring. Such notice shall be sent directly to the Department and shall be mailed, emailed, hand delivered or sent by facsimile transmission to (State Representative's Name, Address & Fax Number).

Acceptability of Insurers

Contractor's insurance shall be placed with companies licensed in the State of Arizona or hold approved non-admitted status on the Arizona Department of Insurance List of Qualified Unauthorized Insurers. Insurers shall have an "A.M. Best" rating of not less than A- VII. The State of Arizona in no way warrants that the above-required minimum insurer rating is sufficient to protect the Contractor from potential insurer insolvency.

Verification of Coverage

Contractor shall furnish the State of Arizona with certificates of insurance (valid ACORD form or equivalent approved by the State of Arizona) evidencing that Contractor has the insurance as required by this Contract. An authorized representative of the insurer shall sign the certificates.

All such certificates of insurance and policy endorsements must be received by the State before work commences. The State's receipt of any certificates of insurance or policy endorsements that do not comply with this written agreement shall not waive or otherwise affect the requirements of this agreement.

Each insurance policy required by this Contract must be in effect at, or prior to, commencement of work under this Contract. Failure to maintain the insurance policies as required by this Contract, or to provide evidence of renewal, is a material breach of contract.

All certificates required by this Contract shall be sent directly to the Department. The State of Arizona project/contract number and project description shall be noted on the certificate of insurance. The State of Arizona reserves the right to require complete copies of all insurance policies required by this Contract at any time.

Subcontractors

Contractor's certificate(s) shall include all subcontractors as insureds under its policies or Contractor shall be responsible for ensuring and/or verifying that all subcontractors have valid and collectable insurance as evidenced by the certificates of insurance and endorsements for each subcontractor. All coverages for subcontractors shall be subject to the minimum Insurance Requirements identified above. The Department reserves the right to require, at any time throughout the life of this contract, proof from the Contractor that its subcontractors have the required coverage.

Approval and Modifications

The Contracting Agency, in consultation with State Risk, reserves the right to review or make modifications to the insurance limits, required coverages, or endorsements throughout the life of this contract, as deemed necessary. Such action will not require a formal Contract amendment but may be made by administrative action.

Exceptions

In the event the Contractor or subcontractor(s) is/are a public entity, then the Insurance Requirements shall not apply. Such public entity shall provide a certificate of self-insurance. If the Contractor or subcontractor(s) is/are a State of Arizona agency, board, commission, or university, none of the above shall apply.

7.0 Warranties

No modifications to uniform terms and conditions section.

8.0 State's Contractual Remedies

No modifications to uniform terms and conditions section.

9.0 Contract Termination

No modifications to uniform terms and conditions section

10.0 Contract Claims

No modifications to uniform terms and conditions section.

11.0 General Provisions for Products

11.1	**Applicability**	Article 11 applies to the extent the Work is or includes Materials.
11.2	**Off-Contract Materials**	Contractor shall ensure that the design and/or procedures for the Materials ordering method prevents Purchase Orders for off-contract items or excluded items. Notwithstanding that State might have its own internal administrative rules regarding off-contract or excluded item ordering, and endeavors to prevent such purchase orders from occurring, Contractor is responsible for not accepting any such Purchase Orders; State may, at its discretion, return any such items under subparagraph 11.17 or cancel any such Purchase Order under subparagraph 11.18, in either case being without obligation and at Contractor's expense. As used above, "off-contract item" refers to any product not included in the scope of the Contract and for which no price or compensation has been established contractually, and "excluded item" refers to any product expressly stated in the Contract as being excluded from the Contract.
11.3	**Compensation for Late Deliveries**	Contractor shall have clear, published policies in place regarding late delivery, purchase order cancelation, discounts, or rebates given to compensate for late deliveries, etc., and make them readily available to those Eligible Agencies that are likely to need them.
11.4	**Indicate Shipping Costs on Purchase Order**	If shipping cost is additional to the contracted price or rate for an item, the Contractor shall identify the shipping cost it intends to add for shipping, as a separate line item on the price quote provided to ASDB. The Contractor shall also provide the required substantiating documentation for the shipping cost with the price quote. If ASDB approves paying a shipping cost, ASDB will list the agreed upon shipping cost as a line item on their Purchase Order, when it is issued. If there is no additional shipping cost, the Contractor shall indicate on the price quote that shipping is included in the Purchase Order price.
11.5	**Current Products**	Contractor shall keep all products being offered under the Contract: (a) in current and ongoing production; (b) in its advertised product lines; (c) as models or types that are actively functioning in other paying customer environments; and (d) in conformance to the requirements of the Contract.

11.6	**Maintain Comprehensive Selection**	Contractor shall provide at all times the comprehensive selection of products for which a price is established in the Pricing Document.
11.7	**Additional Products**	State, at its discretion, may modify the scope of the Contract by Contract Amendment to include additional products or product categories so long as they are within the general scope of the ones originally covered by the Contract. Once the Contract Amendment has been fully executed, Contractor shall then update all applicable catalogs and price lists and make them available to all affected entities at no additional cost. Either party may make the request to add products to the Contract; regardless of who makes the request, the parties shall negotiate in good faith a fair price for any additional products, but State may elect not to add some or all of the products in question if no agreement is reached on pricing in a timely manner. Contractor's request or proposal in response to State's request must include: (a) documentation demonstrating that the additional products meet or exceed the specifications for the original products while remaining in the same product groups as the original ones; and (b) documentation demonstrating that the proposed price for the additional products is both fair and reasonable and at the same level of discount relative to market price as were the original ones. Demonstration of (b) typically requires showing how prices at which sales are currently or were last made to a significant number of buyers compare to the prices or discounts (as applicable) being proposed for the additional products.
11.8	**Discontinued Products**	If a product or groups of products covered by the Contract are discontinued by the manufacturer, Contractor shall notify State within 5 (five) business days after receiving the manufacturer's notification. State, at its discretion, will either allow Contractor to provide substitutes for the discontinued products or delete the products from the scope of the Contract, both of which will be accomplished by Contract Amendment. Contractor shall then update all applicable catalogs and price lists and make them available to all affected entities at no additional cost. The parties shall negotiate in good faith a fair price for any substitute product, but State may elect to delete the products from the scope of the Contract if no agreement is reached on substitute pricing in a timely manner. When notifying State of the discontinuance, Contractor shall provide: (a) manufacturer's announcement or documentation stating that the products have been discontinued, with identification by model/part number; (b) documentation demonstrating that the substitute products meet or exceed the specifications for the discontinued products while remaining in the same product groups as were the discontinued ones; and (c) documentation demonstrating that the proposed price for the substitute products is both fair and reasonable and at the same level of discount relative to market price as were the discontinued ones (with demonstration being as described in subparagraph 11.7).
11.9	**Forced Substitutions**	Forced substitutions will not be permitted; Contractor shall obtain State's prior written consent before making any discretionary substitution for any product covered by the Contract.
11.10	**Recalls**	In the event of a recall notice, technical service bulletin, or other important notification affecting a product offered under the Contract (collectively, "recalls" hereinafter), Contractor shall send timely notice to State for each applicable Purchase Order referencing the affected Purchase Order and product. Notwithstanding whatever protection Contractor might have under A.R.S. § 12-684 with respect to a manufacturer, Contractor shall handle recalls entirely and without obligation on State's part, other than to permit removal of installed products, retrieval of stored products, etc., as necessary to implement the recall.
11.11	**Delivery**	11.11.1 PRICING. Unless stated otherwise in the Pricing Document, all Materials prices set forth therein are FCA (seller's dock) Incoterms®2010, with "seller's dock" meaning the last place of manufacturing, assembly, integration, final packing, or warehousing before departure to designated point of delivery to State. For reference, the foregoing is to be construed as equivalent to "F.O.B. Origin, Contractor's Facility" under FAR 52.247-30.

11.11.2 LIABILITY. Unless stated otherwise in the Pricing Document or an Purchase Order, Contractor's liability for all Materials is DDP (State-designated receiving point per Purchase Order) Incoterms®2010, but with unloading at destination included. For reference, the foregoing is to be construed as equivalent to "F.O.B. Destination, Within Consignee's Premises" under FAR 52.247-35.

11.11.3 PAYMENT. Unless stated otherwise in the Pricing Document or an Purchase Order, State shall reimburse Contractor the costs of the difference between DDP (State-designated receiving point per Purchase Order) and FCA (seller's dock) with no mark-up, which Contractor shall itemize and invoice separately.

11.12 Delivery Time

Unless stated otherwise in the Pricing Document generally or in the applicable Purchase Order particularly, Contractor shall make delivery within 2 (two) weeks or earlier after receiving each Purchase Order. If Contractor is unable to make delivery within 2 (two) weeks after receiving the Purchase Order, the Contractor will communicate expected delivery time to Eligible Agency within 24 hours after Purchase Order.

11.13 Delivery Locations

Contractor shall offer deliveries to every location served under the scope of the Contract, specifically:

1. if the Contract is for a single State agency in a single area, then Contractor shall deliver to any agency location in that area;
2. if the Contract is for a single State agency in all its locations, then Contractor shall deliver to any of that agency's location in Arizona;
3. if the Contract is for statewide use but excludes certain areas, then Contractor shall deliver to any Eligible Agency location that is not in the excluded areas; and
4. if the Contract is for unrestricted statewide use, then:
    a) Contractor shall deliver to any Eligible Agency anywhere in Arizona;
    b) if the Pricing Document indicates defined delivery areas and prices, those always apply unless the Purchase Order expressly states otherwise and Contractor accepts it.

11.14 Conditions at Delivery Location

Contractor shall verify receiving hours and conditions (i.e. height/weight restrictions, access control, etc.) with the relevant purchaser for the receiving site before scheduling or making a delivery. State will neither allow extra charges for wait time, comebacks, or the like nor excuse late delivery if Contractor has failed to make the verification or comply with the applicable conditions. Contractor shall make each delivery to the specific location indicated in the Purchase Order, which Contractor acknowledges might be inside an industrial building, institutional building, low-rise office building, or high-rise office building instead of a normal receiving dock. Contractor might be required to make deliveries to locations inside a secured perimeter at certain institutional facilities such as prisons where prior clearances are required for each delivery and driver individually. Contractor shall contact each such facility directly to confirm its most-current security clearance procedures, allowable hours for deliveries, visitor dress code, and other applicable rules. State will neither allow extra charges for wait time, comebacks, or the like nor excuse late delivery if Contractor has failed to make the confirmation or comply with the applicable conditions.

11.15 Materials Acceptance

State has the right to make acceptance of Materials subject to a complete inspection on delivery and installation, if installation is Contractor's responsibility. State may apply as acceptance criteria conformity to the Contract, workmanship and quality, correctness of constituent materials, and any other matter for which the Contract or applicable laws state a requirement, whether stated directly or by reference to another document, standard, reference specification, etc. Contractor shall remove any rejected Materials

from the delivery location, or from any immediate environs to which it might have been reasonably necessary to move it, carry it off the delivery premises, and subsequently deliver an equal number or quantity of conforming items. State will not owe Contractor any payment for rejected Materials, and State may, at its discretion, withhold or make partial payment for any rejected Materials that have been returned to Contractor in those instances where State has agreed to permit repair instead of demanding replacement.

11.16 Correcting Defects

Contractor shall, at no additional cost and without entitlement to extension of any delivery deadline or specified time for performance, remove or exchange and replace any defective or non-conforming delivered or installed Materials.

1. Contractor shall be solely responsible for the cost of any associated cutting and patching, temporary protection measures, packing and crating, hoisting and loading, transportation, unpacking, inspection, repacking, reshipping, and reinstallation if installation is within the scope of the Contract.
2. If Contractor fails to do so in a timely manner, State will be entitled to exercise its remedies under paragraph 8.5 [Right of Offset] of the Uniform Terms and Conditions.
3. Whether State will permit Contractor to repair in place or demands that Contractor remove and replace is at State's discretion in each instance, provided that, State shall not apply that discretion punitively if repair in place is practicable and doing so would not create safety hazards, put property at risk, unreasonably interfere with operations, create public nuisance, or give rise to any other reasonable concern on State's part.

11.17 Returns

State may, at its discretion, return for full credit and with no restocking charges any delivered Materials unused in the original packaging, including any instruction manuals or other incidental item that accompanied the original shipment, within 30 (thirty) days after receipt. If State elects to return delivered Materials, then State shall pay all freight, delivery, and transit insurance costs to return the products to the place from which Contractor shipped them, provided that, if State returns delivered Materials because they are defective or non-conforming or for any other reason having to do with Contractor fault or error, then State will not be responsible for paying freight, delivery, or transit insurance costs to return the products and may, at its discretion, either have those billed directly to Contractor or offset them under paragraph 8.5 [Right of Offset] of the Uniform Terms and Conditions.

11.18 Purchase Order Cancellation

State may cancel Purchase Orders within a reasonable period after issuance and at its discretion. The same method as that used for ordering will be used for cancellation. If State cancels an Purchase Order, then State shall:

1. pay Contractor for any portion of the Materials and Services from that Purchase Order that have been properly delivered or performed as of the cancellation effective date plus 1 (one) additional business day;
2. reimburse Contractor for:
    a) its actual, documented costs incurred in fulfilling the Purchase Order up to the cancellation effective date plus 1 (one) additional business day; and
    b) the cost of any obligations it incurred as of the cancellation effective date plus 1 (one) additional business day that demonstrably cannot be canceled, or that have pre-established cancelation penalties specified in the relevant Subcontracts, to the extent the penalties are reasonable and customary for the work in question; and

3. contractor shall not charge or be entitled to charge State for any new costs it incurs after receiving the cancelation notice plus 1 (one) business day or for any lost profits or opportunity.

By way of reminder, State is not liable for any products that were produced, shipped, or delivered or any services that were performed before Contractor had acknowledged the corresponding Purchase Order.

11.19 Product Safety

Materials as-shipped must comply with applicable safety regulations and standards. Unless expressly stated otherwise in the Scope of Work, State is not responsible for making any Materials safe or compliant following acceptance and is relying exclusively on Contractor to deliver only products that are already safe and compliant.

11.20 Hazardous Materials

Contractor shall timely provide State with any "Safety Data Sheets" (SDS) and any other hazard communication documentation required under the US Department of Labor's Occupational Safety and Health Administration (OSHA) "Hazard Communication Standard" (often referred to as the "HazCom 2012 Final Rule") that is reasonably necessary for State to comply with regulations when it or its other contractors install, handle, operate, repair, maintain or remove any Materials. Note that, in the past, those documents might have been referred to as "Material Safety Data Sheets" or "Product Safety Data Sheets", but State (and this Contract) use only the more up-to-date "SDS" reference. Contractor shall ensure that all its relevant personnel understand the nature of and hazards associated with, to the extent it they are Contractor's responsibility under the Contract, the design, shipping, handling, delivery, installation, repair and maintenance of any portion of the Work that is, contains or will become upon use a hazardous material, with "hazardous material" being any material or substance that is: (1) identified now or in the future as being hazardous, toxic or dangerous under applicable laws; or (2) subject to statutory or regulatory requirement governing special handling, disposal or cleanup.

12.0 General Provisions for Services

12.1 Applicability

Article 12 applies to the extent the Work is or includes Services.

12.2 Comprehensive Services Offering

Contractor shall provide the comprehensive range of services for which a price is established in the Pricing Document for ordering by Eligible Agencies, and Co-Op Buyers if co-op buying applies.

12.3 Additional Services

State at its discretion may modify the scope of the Contract by Contract Amendment to include additional services or service categories that are within the general scope of the ones originally covered by the Contract if it determines that doing so is in its best interest. Once the Contract Amendment is fully executed, Contractor shall then update all applicable price lists and make them available to all affected entities at no additional cost. Either party may make the request to add services to the Contract; regardless of who makes the request, the parties shall negotiate in good faith a fair price for any additional services, but State may elect not to add some or all of the services in question if no agreement is reached on pricing in a timely manner. Contractor's request or proposal in response to State's request must include documentation demonstrating that the proposed price for the additional services is both fair and reasonable and comparable to the original ones.

12.4 Off-Contract Services

Contractor shall ensure that the design and/or procedures for the Services ordering method prevents Purchase Orders for off-contract or excluded services. Notwithstanding that State might have its own internal administrative rules regarding off contract or excluded service ordering, and endeavors to prevent such purchase orders from occurring, Contractor is responsible for not accepting any such Purchase Orders. State may, at its discretion, cancel any such Purchase Order without obligation. As used above, "off-contract service" refers to any

service not included in the scope of the Contract and for which no price or compensation has been established contractually, and "excluded service" refers to any service expressly excluded from the scope of the Contract.

12.5 Removal of Personnel

Notwithstanding that Contractor is in every circumstance responsible for hiring, assigning, directing, managing, training, disciplining, and rewarding its personnel, State may at its discretion and without the obligation to demonstrate cause instruct Contractor to remove any of its personnel from State's facilities or from further assignment under the Contract. In such cases, Contractor shall promptly replace them with other personnel having equivalent qualifications, experience, and capabilities.

12.6 Transitions

During commencement, Contractor shall attend transition meetings with any outgoing vendors to coordinate and ease the transition so that the effect on State's operations is kept to a minimum. State may elect to have outgoing vendors complete some or all of their work or purchase orders in progress to ease the transition as is safest and most efficient in each instance, even if that scope is covered under the Contract. Conversely, State anticipates having a continued need for the same materials and services upon expiration or earlier termination of the Contract. Accordingly, Contractor shall work closely with any new (incoming) vendor and State to ensure as smooth and complete a transfer as is practicable. State's representative shall coordinate all transition activities and facilitate joint development of a comprehensive transition plan by both Contractor and the incoming vendor. As with the incoming transition. State may permit Contractor (outgoing) to complete work or purchase orders in progress to ease the transition as is safest and most efficient in each instance.

12.7 Accuracy of Work

Contractor is responsible for the accuracy of the Services, and shall promptly make all necessary revisions or corrections resulting from errors and omissions on its part without additional compensation. Acceptance by State will not relieve Contractor of responsibility for correction of any errors discovered subsequently or necessary clarification of any ambiguities.

12.8 Requirements at Services Location

Contractor personnel shall perform their assigned portions of the Services at the specific location indicated in the Purchase Order (if applicable). Contractor acknowledges that the location might be inside an industrial building, institutional building, or one of various office types and classes. Additionally, if performing the Services requires Contractor personnel to work inside a secured perimeter at certain institutional facilities such as prisons where prior clearances are required, Contractor shall contact the facility directly to confirm its most-current security clearance procedures, allowable hours for work, visitor dress code, and other applicable rules. State will neither allow extra charges for wait time, comebacks, or the like nor excuse late performance if Contractor has failed to make the confirmation or comply with the applicable conditions.

12.9 Services Acceptance

State has the right to make acceptance of Services subject to acceptance criteria. State may apply as acceptance criteria conformity to the Contract, accuracy, completeness, or other indicators of quality or other matter for which the Contract or law states a requirement, whether stated directly or by reference to another document, standard, reference specification, etc. State will not owe Contractor any payment for un-accepted Services; and State may, at its discretion, withhold or make partial payment for any rejected Services if Contractor is still in the process of re-performing or otherwise curing the grounds for State's rejection.

12.10 Corrective Action Required

Notwithstanding any other guarantees, general warranties, or particular warranties Contractor has given under the Contract, if Contractor fails to perform any material portion of the Services, including failing to complete any contractual deliverable, or if its performance fails to meet agreed-upon service levels or service standards set out in or referred to in the Contract, then Contractor shall perform a root-cause analysis to identify the source of the failure and use all commercially reasonable efforts to correct the failure and meet the Contract requirements as promptly as is practicable.

1. Contractor shall provide to State a report detailing the identified cause and setting out its detailed corrective action plan promptly after the date the failure occurred (or the date when the failure first became apparent, if it was not apparent immediately after occurrence).
2. State may demand to review and approve Contractor's analysis and plans, and Contractor shall make any corrections State instructs and adopt State's recommendations so far as is commercially practicable, provided that State may insist on any measures it determines within reason to be necessary for safety or protecting property and the environment.
3. Contractor shall take the necessary action to avoid any like failure in the future, if doing so is appropriate and practicable under the circumstances.

13.0 Data and Information Handling

13.1 Applicability

Article 13 applies to the extent the Work includes handling of any (1) State's proprietary and sensitive data or (2) confidential or access-restricted information obtained from State or from others at State's behest.

13.2 Data Protection and Confidentiality of Information

Contractor warrants that it will establish and maintain procedures and controls acceptable to State for ensuring that State's proprietary and sensitive data is protected from unauthorized access and information obtained from State or others in performance of its contractual duties is not mishandled, misused, or inappropriately released or disclosed. For purposes of this paragraph, all data created by Contractor in any way related to the Contract, provided to Contractor by State, or prepared by others for State are proprietary to State, and all information by those same avenues is State's confidential information. To comply with the foregoing warrant:

1. Contractor shall: (a) notify State immediately of any unauthorized access or inappropriate disclosures, whether stemming from an external security breach, internal breach, system failure, or procedural lapse; (b) cooperate with State to identify the source or cause of and respond to each unauthorized access or inappropriate disclosure; and (c) notify State promptly of any security threat that could result in unauthorized access or inappropriate disclosures; and
2. Contractor shall not: (a) release any such data or allow it to be released or divulge any such information to anyone other than its employees or officers as needed for each person's individual performance of his or her duties under the Contract, unless State has agreed otherwise in advance and in writing; or (b) respond to any requests it receives from a third party for such data or information, and instead route all such requests to State's designated representative.

13.3 Personally Identifiable Information.

Without limiting the generality of paragraph 13.2, Contractor warrants that it will protect any personally identifiable information ("PII") belonging to State's employees' or other contractors or members of the general public that it receives from State or otherwise acquires in its performance under the Contract.

For purposes of this paragraph:

1. PII has the meaning given in the [federal] Office of Management and Budget (OMB) *Memorandum M-07-16 Safeguarding Against and Responding to the Breach of Personally Identifiable Information*; and
2. "protect" means taking measures to safeguard personally identifiable information and prevent its breach that are functionally equivalent to those called for in that OMB memorandum and elaborated on in the [federal] General Services Administration (GSA) *Directive CIO P* 2180*.1 GSA Rules of Behavior for Handling Personally Identifiable Information*.

NOTE (1): For convenience of reference only, the OMB memorandum is available at:

https://www.whitehouse.gov/sites/default/files/omb/memoranda/fy2007/m07-16.pdf

NOTE (2): For convenience of reference only, the GSA directive is available at:

http://www.gsa.gov/portal/directive/d0/content/658222

13.4 Protected Health Information

Contractor warrants that, to the extent performance under the Contract involves individually identifiable health information (referred to hereinafter as protected health information ("PHI") and electronic PHI ("ePHI") as defined in the Privacy Rule referred to below), it:

1. is familiar with and will comply with the applicable aspects of the following collective regulatory requirements regarding patient information privacy protection: (a) the "Privacy Rule" in CFR 45 Part 160 and Part 164 pursuant to the Health Insurance Portability and Accountability Act ("HIPAA") of 1996; (b) Arizona laws, rules, and regulations applicable to PHI/ePHI that are not preempted by CFR 45-160(B) or the Employee Retirement Income Security Act of 1974 ("ERISA") as amended; and (c) State's current and published PHI/ePHI privacy and security policies and procedures;
2. will cooperate with State in the course of performing under the Contract so that both State and Contractor stay in compliance with the requirements in *(1)* above; and
3. will sign any documents that are reasonably necessary to keep both State and Contractor in compliance with the requirements in *(1)* above, in particular "Business Associate Agreements" in accordance with the Privacy Rule.

NOTE: For convenience of reference only, the Privacy Rule is available at:

http://www.hhs.gov/hipaa/for-professionals/privacy/index.html

14.0 Information Technology Work

14.1 Applicability

Article 14 applies to any Invitation for Bids, Request for Proposals, or Request for Quotations for "Information Technology," as defined In A.R.S. § 41-3501(6) 6: " . . . computerized and auxiliary automated information processing, telecommunications and related technology, including hardware, software, vendor support and related services, equipment and projects" if and to the extent that the Work is or includes Information Technology.

14.2 Background Checks

Each of Contractor's personnel who is an applicant for an information technology position must undergo the security clearance and background check procedure, which includes fingerprinting, as required by A.R.S § 41-710. Contractor shall obtain and pay for the security clearance and background check. Contractor personnel who will have administrator privileges on a State network must additionally provide identify and address verification and undergo State-specified training for unescorted access, confidentiality, privacy, and data security.

14.3 Information Access

14.3.1 SYSTEM MEASURES. Contractor shall employ appropriate system management and maintenance, fraud prevention and detection, and encryption application and tools to any systems or networks containing or transmitting State's proprietary data or confidential information.

14.3.2 INDIVIDUAL MEASURES. Contractor personnel shall comply with applicable State policies and procedures regarding data access, privacy, and security, including prohibitions on remote access and obtaining and maintaining access IDs and passwords. Contractor is responsible to State for ensuring that any State access IDs and passwords are used only by the person to whom they were issued. Contractor shall ensure that personnel are only provided the minimum only such level of access necessary to perform his or duties. Contractor shall on request provide a current register of the access IDs and passwords and corresponding access levels currently assigned to its personnel.

14.3.3 ACCESS CONTROL. Contractor is responsible to State for ensuring that hardware, software, data, information, and that has been provided by State or belongs to or is in

the custody of State and is accessed or accessible by Contractor personnel is only used in connection with carrying out the Work, and is never commercially exploited in any manner whatsoever not expressly permitted under the Contract. State may restrict access by Contractor personnel, or instruct Contractor to restrict access their access, if in its determination the requirements of this subparagraph are not being met.

14.4 Pass-Through Indemnity

14.4.1 INDEMNITY FROM THIRD PARTY. For computer hardware or software included in the Work as discrete units that were manufactured or developed solely by a third party, Contractor may satisfy its indemnification obligations under the Contract by, to the extent permissible by law, passing through to State such indemnity as it receives from the third-party source (each a "Pass-Through Indemnity") and cooperating with State in enforcing that indemnity. If the third party fails to honor its Pass-Through Indemnity, or if a Pass-Through Indemnity is insufficient to indemnify State Indemnitees to the extent and degree Contractor is required to do by the Uniform Terms and Conditions, then Contractor shall indemnify, defend and hold harmless State Indemnitees to the extent the Pass-Through Indemnity does not.

14.4.2 NOTIFY OF CLAIMS. State shall notify Contractor promptly of any claim to which a Pass-Through Indemnity might apply. Contractor, with reasonable consultation from State, shall control of the defense of any action on any claim to which a Pass-Through Indemnity applies, including negotiations for settlement or compromise, provided that:

(a) State reserves the right to elect to participate in the action at its own expense;

(b) State reserves the right to approve or reject any settlement or compromise on reasonable grounds and if done so timely; and

(c) State shall in any case cooperate in the defense and any related settlement negotiations.

14.5 Systems and Controls

In consideration for State having agreed to permit Pass-Through Indemnities in lieu of direct indemnity, Contractor agrees to establish and keep in place systems and controls appropriate to ensure that State funds under this Contract are not knowingly used for the acquisition, operation, or maintenance of Materials or Services in violation of intellectual property laws or a third party's intellectual property rights.

14.6 Redress of Infringement

14.6.1 REPLACE, LICENSE, OR MODIFY. If Contractor becomes aware that any Materials or Services infringe, or are likely to be infringing on, any third party's intellectual property rights, then Contractor shall at its sole cost and expense and in consultation with State either:

(a) replace any infringing items with non-infringing ones;

(b) obtain for State the right to continue using the infringing items; or

(c) modify the infringing item so that they become non-infringing, so long as they continue to function as specified following the modification.

14.6.2 CANCELLATION OPTION. In every case under 14.6.1, if none of those options can reasonably be accomplished, or if the continued use of the infringing items is impracticable, State may cancel the relevant Purchase Order or terminate the Contract and Contractor shall take back the infringing items. If State does cancel the Purchase Order or terminate the Contract, Contractor shall refund to State:

(a) for any software created for State under the Contract, the amount State paid to Contactor for creating it;

(b) for all other Materials, the net book value of the product provided according to generally accepted accounting principles; and

(c) for Services, the amount paid by State or an amount equal to 12 (twelve) months of charges, whichever is less.

14.6.3. EXCEPTIONS. Contractor will not be liable for any claim of infringement based solely on any of the following by a State Indemnitee:

(a) modification or use of Materials other than as contemplated by the Contract or expressly authorized or proposed by a Contractor Indemnitor;

(b) operation of Materials with any operating software other than that supplied by Contractor or authorized or proposed by a Contractor Indemnitor; or

(c) combination or use with other products in a manner not contemplated by the Contract or expressly authorized or proposed by a Contractor Indemnitor.

14.7 First Party Liability Limitation

14.7.1 LIMIT. Subject to the provisos that follow below and unless stated otherwise in the Special Terms and Conditions, State's and Contractor's respective first party liability arising from or related to the Contract is limited to the greater of $1,000,000 (one million dollars) or 3 (three) times the purchase price of the specific Materials or Services giving rise to the claim.

14.7.2 PROVISOS. This paragraph 14.7 limits liability for first party direct, indirect, incidental, special, punitive, and consequential damages relating to the Work regardless of the legal theory under which the liability is asserted. This paragraph 14.7 does not limit liability arising from any:

(a) Indemnified Claim against which Contractor has indemnified State Indemnitees;

(b) claim against which Contractor has indemnified State Indemnitees; or

(c) provision of the Contract calling for liquidated damages or specifying amounts or percentages as being at-risk or subject to deduction for performance deficiencies.

14.7.2 PURCHASE PRICE DETERMINATION. If the Contract is for a single-agency and a single Purchase Order (or if no Purchase Order applies), then "purchase price" in Subparagraph 14.7.1 above means the aggregate Contract price current at the time of Contract expiration or earlier termination, including all change orders or other forms of Contract Amendment having an effect on the aggregate price through that date. In all other cases, "purchase price" above means the total price of the Purchase Order for the specific equipment, software, or services giving rise to the claim, and therefore a separate limit will apply to each Purchase Order.

14.7.3 NO EFFECT ON INSURANCE. This paragraph does not modify the required coverage limits, terms, and conditions of, or any insured's ability to claim against, any insurance that Contractor is required by the Contract to provide, and Contractor shall obtain express endorsements that it does not.

14.8 Information Technology Warranty

14.8.1 SPECIFIED DESIGN. Where the Scope of Work for information technology Work provides a detailed design specification or sets out specific performance requirements, Contractor warrants that the Work will provide all functionality material to the intended use stated in the Contract, provided that, the foregoing warranty does not extend to any portions of the Materials that are:

(a) modified or altered by anyone not authorized by Contractor to do so;

(b) maintained in a way inconsistent to any applicable manufacturer recommendations; or

(c) operated in a manner not within its intended use or environment.

14.8.2 COTS SOFTWARE. With respect to Materials provided under the Contract that are commercial-off-the-shelf (COTS) software, Contractor warrants that:

(a) to the extent possible, it will test the software before delivery using commercially available virus detection software conforming to current industry standards;

(b) the COTS software will, to the best of its knowledge, at the time of delivery be free of viruses, backdoors, worms, spyware, malware, and other malicious code

that could hamper performance, collect unlawfully any personally identifiable information, or prevent products from performing as required by the Contract; and

(c) it will provide a new or clean install of any COTS software that State has reason to believes contains harmful code.

14.8.3 PAYMENT HAS NO EFFECT. The warranties in this paragraph are not affected by State's inspection, testing, or payment.

14.9 Specific Remedies

Unless expressly stated otherwise elsewhere in the Contract, State's remedy for breach of warranty includes, at State's discretion, re-performance, repair, replacement, or refund of any amounts paid by State for the nonconforming Work, plus (in every case) Contractor's payment of State's additional, documented, and reasonable costs to procure materials or services equivalent in function, capability, and performance at that first called for. For clarification of intent, the foregoing obligations are limited by the limitation of liability. If none of the forgoing options can reasonably be effected, or if the use of the materials by State is made impractical by the nonconformance, then State may seek any remedy available to it under law.

14.10 Section 508 Compliance

Unless specifically authorized in the Contract, any electronic or information technology offered to the State of Arizona under this Contract shall comply with A.R.S. § 18-131 and § 18-132 and Section 508 of the Rehabilitation Act of 1973, which requires that employees and members of the public shall have access to and use of information technology that is comparable to the access and use by employees and members of the public who are not individuals with disabilities.

14.11 Cloud Applications

The following are required for Contractor of any "cloud" solution that hosts State data outside of the State's network, or transmits and/or receives State data.

1. Submit a completed Arizona Baseline Infrastructure Security Controls assessment spreadsheet as found at: https://aset.az.gov/resources/policies-standards-and-procedures, and mitigate or install compensating controls for any issues of concern identified by State. Contractor is required to provide any requested documentation supporting the review of the assessment. The assessment shall be re-validated on a minimum annual basis.
2. State reserves the right to conduct Penetration tests or hire a third party to conduct penetration tests of the Contractor's application. Contractor will be alerted in advance and arrangements made for an agreeable time. Contractor shall respond to all serious flaws discovered by providing an acceptable timeframe to resolve the issue and/or implement a compensating control.
3. Contractor must submit copy of system logs from cloud system to State of AZ security team on a regular basis to be added to the State SIEM (Security Information Event Monitor) or IDS (Intrusion Detection System).

Contractor must employ a government-rated cloud compartment to better protect sensitive or regulated State data.

15.0 Agency Contract Administration and Operations – Department of Corrections

15.1 Drug Testing Program

The Contractor shall implement a drug and alcohol testing program for applicants, employees and volunteers, at no additional cost to the Department. The Contractor shall ensure that all subcontractors implement the same drug and alcohol testing program required by the Department. The program shall meet the requirements of Department Order 522, Drug-Free Workplace.

15.2 Department Policies and Procedures

The contractor shall follow all Department policies, procedures and Department Orders (DO) and Directors Instruction (DI) i.e., drug-free workplace, dress code, grooming, etc. The policies, procedures, DO and DI are available on the following website www.azcorrections.gov.

15.3 Notice Warning

Any person who takes into or out of or attempts to take into or out of a correctional facility or the grounds belonging to or adjacent to a correctional facility, any item not specifically authorized by the correctional facility, shall be prosecuted under the provisions of the Arizona Revised Statues. All persons, including, employee and visitors, entering upon these confines are subject to routine searches of their persons, vehicles,

Authority	A.R.S. §13-2501:
	A.R.S. §13-2505
	ADC Department Order 708

15.4 Contraband

Contraband means any dangerous drug, narcotic drug, intoxicating liquor or any kind, deadly weapon, dangerous instrument, explosive or any other article whose use of or possession would endanger the safety, security or preservation of order in a correctional facility or any person therein. (Any other article includes any substance which could cause abnormal behavior, i.e., marijuana, nonprescription medications, etc.)

Promoting prison contraband A.R.S. § 13-2505:

A person, not otherwise authorized by law, commits promoting prison contraband:

a. By knowingly taking contraband into a correctional facility or the grounds of such a facility; or

b. By knowingly conveying contraband to any persons confined in a correctional facility; or

c. By knowingly making, obtaining, or possessing contraband while being confined in a correctional facility.

Promoting Prison Contraband is a Class 5 felony.

Authority	A.R.S. § 13-2501
	A.R.S. § 13-2505
	ADC Department Order 70814.4.2

15.5 Rules and Regulations

15.5.1 Attention of the Offerors is called to the requirements specified in **Attachment 6**, Rules for Non-Employees of the Department of Corrections in Arizona State Prison Complexes which shall be adhered to in all respects.

15.5.2 Should the Contractor require signatures of other parties such as subcontractor or persons directly or indirectly employed by the Contractor, it shall be the Contractor's responsibility to obtain such signatures. The signed document must be submitted within ten (10) days of notification of intent to award.

15.6 Unlawful Sexual Conduct

15.6.1 A person – who is employed by the State Department of Corrections or the Department of Juvenile Corrections; is employed by a private prison facility or a city or county jail; Contracts to provide services with the State Department of Corrections, the Department of Juvenile Corrections, a private prison facility or a city or county jail; is an official visitor, volunteer or agency representative of the State Department of Corrections, the Department of Juvenile Corrections, a private prison facility or a city or county jail – commits unlawful sexual conduct by intentionally or knowingly engaging in any act of a sexual nature with an offender who is in the custody of the State Department of Corrections, the Department of Juvenile Corrections, a private prison facility or a city or county jail or with an offender who is under the supervision of either Department or a city or county.

15.6.2 This section does not apply to a person who is employed by the State Department of Corrections, a private prison facility or a city or county jail or who Contracts to provide services with the State Department of Corrections, a private prison facility or a city or county jail or an offender who is on release status if the person was lawfully married to the prisoner or offender on release status before the prisoner or offender was sentenced to the State Department of Corrections or was incarcerated in a city or county jail.

15.6.3 Unlawful sexual conduct with an offender who is under fifteen years of age is a class 2 felony. Unlawful sexual conduct with an offender who is between fifteen and seventeen years of age is a class 3 felony. All other unlawful sexual conduct is a class 5 felony.

15.6.4 Unlawful sexual conduct; correctional facilities; classification; Definition A.R.S. §13-1419.

15.7 Federal Prison Rape Elimination Act 2003

15.7.1 The Contractor shall comply with the Federal Prison Rape Elimination Act of 2003.14.7.2

End of Section 2-C

SECTION 2-D:

Uniform Terms and Conditions

Version 2018 (2/1/2018)

1.0 Definition of Terms

1.1	**Acceptance**	"Acceptance" means the document headed "Offer and Acceptance Form" bearing the State contract number once Procurement Officer has signed it to signify (1) State's formal acceptance of the Accepted Offer and (2) the formation of the Contract.
1.2	**Accepted Offer**	If State did not request a Revised Offer, then "Vendor Offer" means the Initial Offer. If State did request a Revised Offer but not a Best and Final Offer, then "Accepted Offer" means the latest Revised Offer. If State requested a Best and Final Offer, then "Accepted Offer" means the latest Best and Final Offer.
1.3	**Arizona Procurement Code; A.R.S.; A.A.C.**	The "Arizona Procurement Code, "A.R.S.," and "A.A.C." refers to Arizona Revised Statutes ("A.R.S.") § 41-2501, *et seq.*, and the rules promulgated thereunder, Arizona Administrative Code ("A.A.C.") R2-7-101, *et. seq.*
1.4	**Arizona TPT**	"Arizona TPT" means Arizona Transaction Privilege Tax. For information, refer to the Arizona Department of Revenue (DOR) website at: https://www.azdor.gov/business/transactionprivilegetax.aspx.
1.5	**Attachment**	"Attachment" means any item that: 4. the Solicitation required Offeror to submit as part of the relevant Offer (e.g., Initial Offer, Revised Offer, or BAFO); 5. was attached to an Offer when submitted; and 6. was included in the Accepted Offer.
1.6	**Contract**	"Contract" " means the combination of the Solicitation, including the Uniform and Special Instructions to Offerors, the Uniform and Special Terms and Conditions, and the Specifications and Statement or Scope of Work; the Offer and any Best and Final Offers; and any Solicitation Amendments or Contract Amendments or authorized Purchase Orders.
1.7	**Contract Amendment**	"Contract Amendment" means a document signed by Procurement Officer that has been issued for the purpose of making changes to the Contract after execution. Only the Procurement Officer responsible for this Contract has the authority to modify or amend this Contract. In ProcureAZ, the term "Change Order" has the same meaning as "Contract Amendment".
1.8	**Contract Terms and Conditions**	"Contract Terms and Conditions" means the Special Terms and Conditions and these Uniform Terms and Conditions taken collectively.
1.9	**Contractor**	"Contractor" means the Person identified on the Accepted Offer who has entered into the Contract with State.
1.10	**Contractor Indemnitor**	"Contractor Indemnitor" means Contractor or any of its owners, officers, directors, agents, employees, volunteers or Subcontractors.

1.11	**eProcurement System (currently ProcureAZ)**	"eProcurement System" means State's official electronic procurement system, established pursuant to A.A.C. R2-7-201 as set forth in the Arizona Department of Administration State Procurement Office policy. This eProcurement System may be subject to change. The State's current eProcurement system is "ProcureAZ." The current version of the ADOA policy regarding the State's eProcurement System is *Technical Bulletin No. 020, ProcureAZ – The Official State eProcurement System*. NOTE (1): Technical Bulletin No. 020 is available online at: https://spo.az.gov/administration-policy/state-procurement-resource/procurement-regulations NOTE (2): The URL for ProcureAZ itself is: https://procure.az.gov/
1.12	**Gratuity**	"Gratuity" means a payment, loan, subscription, advance, deposit of money, services, or anything of more than nominal value, present or promised, unless consideration of substantially equal or greater value is received.
1.13	**Indemnified Basic Claims**	"Indemnified Basic Claims" means any and all claims, actions, liabilities, damages, losses, or expenses, including court costs, attorney fees, and costs of claim processing, investigation and litigation, for bodily injury or personal injury, including death, or loss or damage to any real or tangible or intangible personal property, collectively. See paragraph 6.2.
1.14	**Instructions to Offerors**	"Instructions to Offerors" is Section 3-a of Part 3 of the Solicitation Documents.
1.15	**Materials**	"Materials" has the meaning given in A.R.S. § 41-2503(7). Materials includes software, except that if software is sold or provided as a service, then to the extent it consists of encoded information or computer instructions it is included in "Materials" and to the extent it is a service it described in "Services" below.
1.16	**Offer: Initial Offer; Revised Offer; Best and Final Offer (BAFO)**	"Initial Offer" means, per A.A.C. R2-7-101(33), Offeror's proposal submitted to State in response to the Solicitation, as initially submitted. "Revised Offer" means any revised versions of the Initial Offer that Offeror has submitted to State at State's request as permitted under A.A.C. R2-7-C314 and R2-7-C315. "Best and Final Offer" ("BAFO") means, per A.A.C. R2-7-101(8), the Revised Offer submitted after negotiations have been completed that contain Offeror's most favorable terms for price, service, and products to be delivered. Reference to "an Offer, "the Offer," or "your Offer" means any of the Initial Offer, a Revised Offer, or the Best and Final Offer.
1.17	**Pricing Document**	"Pricing Document" means Section 2-B of Part 2 of the Solicitation Documents, provided that, if there is no such Section in the Contract, then "Pricing Document" is to be construed as referring to whatever item in the Contract contains the contracted pricing and payment provisions.
1.18	**Procurement Officer**	"Procurement Officer" means the person, or his or her designee, who has been duly authorized by the State to enter into and administer the Contract and to make written determinations with respect to the Contract. Procurement Officer is as identified on the Acceptance unless subsequently changed by Contract Amendment.
1.19	**Purchase Order**	"Purchase Order" means the instrument by which State authorizes Contractor to perform some or all of the Work. Whether the Contract will have one Purchase Order or many Purchase Orders depends the scope of the Contract and how State will use it. The Special Terms and Conditions provide that information. Any of the following is to be construed as being a "Purchase Order": 1. "Release" or "Release Purchase Order" in ProcureAZ;

2. "task order", "service order," or "job order" when a Release Purchase Order for Services has already been committed in ProcureAZ; or
3. "purchase order" for buying by Co-Op Buyers, if co-op buying applies.

1.20 Services

"Services" has the meaning given in A.R.S. § 41-2503(35), Services include the service aspect s of software described in the definition of "Materials" above.

1.21 Specification

"Specification" has the meaning given in A.R.S. § 41-2561. Specifications (if any are included in the Contract), are indexed in the Scope of Work and could be bound separately from the other documents forming the Contract.

1.22 State

With respect to the Contract generally, "State" means the State of Arizona and its department, agency, university, commission, or board that has executed the Contract. With respect to administration or rights, remedies, obligations and duties under the Contract for a given Purchase Order, "State" means each of Eligible Agency or Co-Op Buyer who has issued the Purchase Order.

1.23 State Fiscal Year

"State Fiscal Year" means the period beginning with July 1 and ending June 30.

1.24 State Indemnitees

"State Indemnitees" means, collectively, the State of Arizona, its departments, agencies, universities, commissions, and boards and, and their respective officers, agents, and employees.

1.25 Subcontract

"Subcontract" means any Contract, express or implied, between the Contractor and another party or between a subcontractor and another party, delegating, in whole or in part, the making or furnishing of any material or any service required for the performance of the Contract.

1.26 Subcontractor

"Subcontractor" has the meaning given in A.R.S. § 41-2503(38).

1.27 Work

"Work" means the totality of the provision of Materials and the Services and all the acts of administration, creation, production, and performance necessary to fulfill and incidental to fulfilling all of Contractor's obligations and duties under the Contract in conformance with the Contract and applicable laws.

2.0 Contract Interpretation

2.1 Arizona Law

The Contract is governed by, and is to be interpreted in accordance with, the laws of the State of Arizona, including, but not limited to the Arizona Procurement Code, without consideration of conflict of laws principles.

2.2 Implied Terms

Each provision of law and any terms required by law to be in this Contract are a part of this Contract as if fully stated in it.

2.3 Contract Order of Precedence

COMPLEMENTARY DOCUMENTS. All of the documents forming the Contract are complementary and all provisions are to be interpreted as a single, united Contract. If certain work, requirements, obligations, or duties are set out only in one but not in another, Contractor shall carry out the Work as though the relevant work, requirements, obligations, or duties had been fully described in all, consistent with the other documents forming the Contract and as is reasonably inferable from them as being necessary to produce complete results.

CONFLICTS. In case of any inconsistency, conflict, or ambiguity among the documents forming the Contract and their provisions, the Contract documents and their provisions are to prevail in the following order, descending from most dominate to most subordinate, provided that, among categories of documents or provisions within the same sub-section below, the document or provision with the latest date prevails. Information being identified in one document but not in another is not to be considered a conflict or inconsistency.

(a) Contract Amendments;

(b) the Solicitation Documents, in the order:

(1) Special Terms and Conditions;

(2) Exhibits to the Special Terms and Conditions;

(3) Uniform Terms and Conditions;

(4) Scope of Work;

(5) Exhibits to the Scope of Work;

(6) Pricing Document;

(7) Exhibits to the Pricing Document;

(8) Specifications; and

(9) any other documents referenced or included in the Solicitation;

(c) Orders, in reverse chronological order; and

(d) Accepted Offer.

2.4 Severability

The provisions of this Contract are severable to the extent allowed under Arizona Contract Law. Any term or condition deemed or adjusted illegal or invalid is thereby stricken from the Contract and will not affect any other term or condition of the Contract..

2.5 Complete Integration

The Contract, including any documents incorporated into the Contract by reference and any authorized Contract Amendments and Orders, is intended by the parties as a final and complete expression of their agreement. There are no prior, contemporaneous, or additional agreements, either oral or in writing, pertaining to the Contract. No course of prior dealings between the parties shall supplement or explain any terms used in this document and no other understanding either oral or in writing can independently bind the State to changes to the Contract.

2.6 Independent Contractor

Contractor is an independent contractor and shall act in an independent capacity in performance under the Contract. Neither party is or is to be construed as being to be the employee or agent of the other party, and no action, inaction, event, or circumstance will be grounds for deeming it to be so.

2.7 No Waiver of Rights

Either party's failure to insist on strict performance of any term or condition of the Contract is not, and is not to be construed as being, nor will it be deemed, a waiver of that term or condition or a bar to, or diminishment of the right of, subsequent enforcement of any term or condition.

3.0 Contract Administration and Operation

3.1 Books and Records; Audit

3.1.1 RETAIN RECORDS. By A.R.S. § 41-2548(B), Contractor shall retain and shall contractually require each Subcontractor to retain books and records relating for any cost and pricing data submitted in satisfaction of § 41-2543 for the period specified in the statute.

3.1.2 RIGHT TO AUDIT. The retained books and records are subject to audit by State during that period. By A.R.S. § § 35-214 and-2548(B), Contractor shall retain and shall contractually require each Subcontractor to retain books and records relating to performance under the Contract for the period specified in the statute and those retained books and records are subject to audit by State during that period.

3.1.3 AUDITING. Contractor or Subcontractor shall either make all such books and records under subparagraphs 3.1.1 and 3.1.2 available to State at all reasonable times or produce the records at a designated State office on State's demand, the choice of which being at State's discretion. For the purpose of this paragraph, "reasonable times" are during normal business hours and in such a manner so as to not unreasonably interfere with normal business activities. Any person who obstructs or impairs an audit being conducted or about to be conducted in relation to and Contract or Subcontract with the State may be found guilty of a Class 5 Felony under A.R.S. § 35-215.

3.2 Non-Discrimination

The Contractor shall comply with State Executive Order No. 2009-09 and all other applicable Federal and State laws, rules and regulations, including the Americans with Disabilities Act.

3.3 Contractor Licenses

Contractor shall maintain current all federal, state and local licenses and permits required for the operation of its business in general, for its operations under the Contract, and for the Work itself.

3.4 Inspection and Testing

By A.R.S. § 41-2547, State may at reasonable times inspect the part of Contractor's or Subcontractors' plant or places of business related to performance under the Contract. Accordingly, Contractor agrees to permit (for itself) and ensure (for Subcontractors) access for inspection at any reasonable time to its facilities, processes, and services. State may inspect or test, at its own cost, any finished goods, work-in-progress, components, or unfinished materials that are be supplied under the Contract or that will be incorporated into something to be supplied under the Contract. If the inspection or testing shows non-conformance or defects, then Contractor will owe State reimbursement or payment of all costs it incurred in carrying out or contracting for the inspection and testing, as well as for any re-inspection or re-testing that might be necessary. Neither inspection of facilities nor testing of goods, work, components, or unfinished materials will of itself constitute acceptance by State of those things.

3.5 Notices and Correspondence

3.5.1 TO CONTRACTOR. State shall:

(a) address all Contract correspondence other than formal notices to the email address indicated as "Default for Type" for "General Mailing Address" in Contractor's corresponding ProcureAZ Vendor Profile; and

(b) address notices to Contractor to the "Contractor Name and Title" at the "Mailing Address" indicated in the Contract

3.5.2 TO STATE. Contractor shall :

(a) address all Contract correspondence, other than notices, to the email address indicated in "Contact Instructions" in the ProcureAZ Summary for State; and

(b) address any required notices to State to Procurement Officer identified as "Purchaser" in the ProcureAZ Summary at the following mailing address:

Arizona Department of Administration
State Procurement Office
100 N 15th Ave., Suite 402
Phoenix, AZ 85007

3.5.3 CHANGES. State may change the designated Procurement Officer, update contact information, or change the applicable mailing address by Contract Amendment.

3.6 Signing of Contract Amendments

Contractor's counter-signature – or "approval" in ProcureAZ, in the case of a Change Order – is not required to give effect if the Contract Amendment only covers either:

4. extension of the term of the Contract within the maximum aggregate term;
5. revision to Procurement Officer appointment or contact information; or
6. modifications of a clerical nature that have no effect on terms, conditions, price, scope, or other material aspect of the Contract.

In every case other than those listed in *(1)*, *(2)*, and *(3)* above, both parties' signature – or "approval" in ProcureAZ, in the case of a Change Order – are required to give it effect.

3.7 Click-Through Terms and Conditions

If either party uses a web based ordering system, an electronic purchase order system, an electronic purchase order acknowledgement, a form of an electronic acceptance, or any software based ordering system with respect to the Contract (each an "Electronic Ordering System"), the parties acknowledge and agree that an Electronic Ordering System is for ease of administration only, and Contractor hereby acknowledges and agrees that the persons using Electronic Ordering Systems on behalf of State do not have any actual or apparent authority to create legally binding obligations that vary from the terms and conditions of the Contract. Accordingly, where an authorized State user is required to "click through" or otherwise accept or be made subject to any terms and conditions in using an Electronic Ordering Systems, any such terms and conditions are deemed void upon presentation. Additionally, where an authorized

State user is required to accept or be made subject to any terms and conditions in accessing or employing any Materials or Services, those terms and conditions will also be void.

3.8 Ownership of Intellectual Property

3.8.1 RIGHTS IN WORK PRODUCT. All intellectual property originated or prepared by Contractor pursuant to the Contract, including but not limited to, inventions, discoveries, intellectual copyrights, trademarks, trade names, trade secrets, technical communications, records reports, computer programs and other documentation or improvements thereto, including Contractor's administrative communications and records relating to the Contract, are considered work product and Contractor's property, provided that, State has Government Purpose Rights to that work product as and when it was delivered to State.

(a) "Government Purpose Rights" are:

i. the unlimited, perpetual, irrevocable, royalty free, non-exclusive, worldwide right to use, modify, reproduce, release, perform, display, sublicense, disclose and create derivatives from that work product without restriction for any activity in which State is a party;

ii. the right to release or disclose that work product to third parties for any State government purpose; and

iii. the right to authorize those to whom it rightfully releases or discloses that work product to use, modify, release, create derivative works from the work product for any State government purpose; such recipients being understood to include the federal government, the governments of other states, and various local governments.

(b) "Government Purpose Rights" do not include any right to use, modify, reproduce, perform, release, display, create derivative works from, or disclose that work product for any commercial purpose or to authorize others to do so.

3.8.2 JOINT DEVELOPMENTS. The parties may each use equally any ideas, concepts, know-how, or techniques developed jointly during the course of the Contract, and may do so at their respective discretion, without obligation of notice or accounting to the other party.

3.8.3 PRE-EXISTING MATERIAL. All pre-existing software and other materials developed or otherwise obtained by or for Contractor or its affiliates independently of the Contract or applicable Purchase Orders are not part of the work product to which rights are granted State under subparagraph 3.8.1 above, and will remain the exclusive property of Contractor, provided that any derivative works of such pre-existing material or elements thereof that are created pursuant to the Contract are part of that work product.

3.9 Subcontracts

3.9.1 INITIAL LIST. At the time of Contract execution, Contractor may have listed prospective Subcontractors in Attachment 3-C to the Vendor Offer [*Proposed Subcontractors*]. If a Subcontractor is on this initial list in a Vendor Offer, then the Contractor has the Procurement Officer's advance consent to enter into a Subcontract with each listed candidate.

3.9.2 ADDITIONAL NAMES. Contractor shall not enter into a Subcontract without first obtaining Procurement Officer's written consent with any prospective Subcontractor that (a) was not listed on Attachment 3-C at time of Contract execution or (b) is for any Materials or Services categories other than the ones for which they were previously consented. For either case *(a)* or *(b)*, Contractor shall submit a written request sufficiently in advance of the need date for those materials or services so that performance under the Contract is not impaired. Procurement Officer may request any additional information he or she determines is necessary to assess the submittal, and may withhold consent pending it.

3.9.3 FLOW-DOWN. Contractor shall incorporate the provisions, terms, and conditions of the Contract into every Subcontract by inclusion or by reference, as appropriate. When making any post-execution consent requests, Contractor shall include its warrant that it will do the same for the pending Subcontracts covered by the request. Entering into Subcontracts will not relieve Contractor of any of its obligations or duties under the Contract, including, among other things, the duty to supervise and coordinate the work of Subcontractors. Nothing contained in any Subcontract will create or is to be construed as creating any contractual relationship between State and the Subcontractor.

3.10 E-Verify Requirements

In accordance with A.R.S. § 41-4401, Contractor warrants compliance with all Federal immigration laws and regulations relating to employees and warrants its compliance with Section A.R.S. § 23-214, Subsection A. Contractor acknowledges and agrees that under A.R.S. § 41-4401, State retains the legal right to inspect papers of any Contractor employee who works under the Contract to ensure compliance with the foregoing warranty and understands that a breach of the foregoing warranty under shall be deemed a material breach of the Contract that is subject to penalties up to and including termination of the Contract.

3.11 Offshore Performance of Certain Work Prohibited

Contractor shall only perform those portions of the Services that directly serve State or its clients and involve access to secure or sensitive data or personal client data within the defined territories of the United States. Unless specifically stated otherwise in the Scope of Work, this paragraph does not apply to indirect or overhead services, redundant back-up services, or services that are incidental to performance under the Contract. This provision applies to work performed by Subcontractors at all tiers.

3.12 Purchase Orders

3.12.1 PURCHASE ORDER SUFFICIENCY. A Purchase Order issued by an authorized person that cites the correct State contract number will suffice to authorize Contractor to provide the Materials and perform the Services covered by that Purchase Order.

3.12.2 PURCHASE ORDER TERMS. All Purchase Orders are subject to the Contract Terms and Conditions; a Purchase Order cannot modify the Contract Terms and Conditions.

3.12.3 PURCHASE ORDERS ARE OBLIGATORY. Until the expiration or earlier termination of the Contract, State may issue and Contractor shall accept Purchase Orders that make proper reference to the Contract and are permissible hereunder, provided that, Contractor is not obliged to accept any Purchase Order that is not consistent with the then-current pricing, lead times, specifications, or payment provisions of the Contract. Contractor shall fulfill and complete any Purchase Orders that are begun but not yet completed as of expiration or earlier termination of the Contract unless State instructs otherwise at the time.

3.12.4 SPECIAL CASE. In the special case where both the following conditions are true, Procurement Officer's signature on the Acceptance is Contractor's authorization to perform and therefore no Purchase Order is required: (a) the Contract is identified as being a "single-agency/single-project" contract and (b) the Contract was created in ProcureAZ as something other than a "Master/ Blanket" type.

3.12.5 NO MINIMUMS OR COMMITMENTS. (a) Contractor shall not impose any minimum dollar amount, item count, services volume, or services duration on Purchase Orders; (b) State makes no commitment of any kind concerning the quantity or monetary value of activity actually initiated or completed during the term of the Contract; (c) Contractor shall only deliver or perform as authorized by Purchase Orders; and (d) State is not limited as to the number of Purchase Orders it may issue for the Contract. For clarity of intent, the foregoing applies equally whether an Eligible Agency issues the Purchase Order or, if applicable, a Co-Op Buyer issues it.

3.12.6 NON-CONTRACTED MATERIALS OR SERVICES. Any attempt to knowingly represent for sales, marketing, or related purposes that goods or services not specifically awarded are under a State contract is a violation of the Contract and law.

3.13 Other Contractors

State may undertake with its own forces or award other contracts to the same or other vendors for additional or related work. In such cases, Contractor shall cooperate fully with State's

employees and such other vendors and carefully coordinate, fit, connect, accommodate, adjust, or sequence its work to the related work by others. Where the Contract requires handing-off Contractor's work to others, Contractor shall cooperate as State instructs regarding the necessary transfer of its work product, services, or records to State or the other vendors. Contractor shall not commit or permit any act that interferes with the State's or other vendors' performance of their work.

3.14 Work on State Premises

3.14.1 COMPLIANCE WITH RULES. Contractor is responsible for ensuring that its personnel comply with State's rules, regulations, policies, documented practices, and documented operating procedures while delivering or installing Materials or performing Services on State's grounds or in its facilities. Contractor shall comply with State security requirements in order to deliver, install, or perform at that particular location, without entitlement to any additional compensation or additional time for performance if those particular requirements are not expressly stated in the Contract.

3.14.2 PROTECTION OF GROUNDS AND FACILITIES. Contractor shall deliver or install the Materials and perform the Services without damaging any State grounds or facilities. Contractor shall promptly repair or replace any damage it caused and at its own expense, subject to whatever instructions and restrictions State needs to make to prevent inconvenience or disruption of operations. If Contractor fails to make the necessary repairs or replacements in a timely manner, State will be entitled to exercise its remedies under paragraph 8.5 [*Right of Offset*].

3.15 Advertising, Publishing and Promotion of Contract

Contractor shall not advertise, promote, or otherwise use information concerning the Contractor commercial benefit without the prior written approval of Procurement Officer, which approval Procurement Officer may withhold at his or her discretion.

4.0 Costs and Payments

4.1 Payments

4.1.1 PAYMENT DEADLINE. State shall make payments in compliance with Arizona Revised Statues Titles 35 and 41. Unless stated otherwise in the Pricing Document, State shall make payment in full for Materials that have been delivered and accepted and Services that have been performed and accepted within the time specified in A.R.S. § 35-342 after both of the following become true: (a) all of the Materials being invoiced have been delivered or installed (as applicable) and accepted and all of the Services being invoiced have been performed and accepted; and (b) Contractor has provided a complete and accurate invoice in the form and manner called for in the Pricing Document, provided that, State will not make or be liable for any payments to Contractor until Contractor has registered properly in ProcureAZ and provided a current IRS Form W-9 or an equivalent form to the State unless excused by law from providing one.

4.1.2 PAYMENTS ONLY TO CONTRACTOR. Unless compelled otherwise by operation of law or order of a court of competent jurisdiction, State will only make payment to Contractor under the federal tax identifier indicated on the Vendor Offer.

4.2 Applicable Taxes

4.2.1 CONTRACTOR TO PAY ALL TAXES. State is subject to Arizona TPT. Therefore, Arizona TPT applies to all sales under the Contract and Arizona TPT is Contractor's responsibility (as seller) to remit. Contractor's failure to collect Arizona TPT or any other applicable sales or use taxes from an Eligible Agency or Co-Op Buyer (as buyer) will not relieve Contractor of any obligation to remit sales or use taxes that are due under the Contract or laws. Unless stated otherwise in the Pricing Document, all prices therein include Arizona TPT as well as every other manner of transaction privilege or sales/use tax that is due to a municipality or another state or its political subdivisions. Contractor shall pay all federal, state, and local taxes applicable to its operations and personnel.

4.2.2 TAX INDEMNITY. Contractor shall hold State harmless from any responsibility for taxes or contributions, including any applicable damages and interest, that are due to federal, state, and local authorities with respect to the Work and the Contract, as well any

related costs; the foregoing expressly includes Arizona TPT, unemployment compensation insurance, social security, and workers' compensation insurance.

4.3 Availability of Funds for the Next State fiscal year

Funds may not presently be available for performance under this Contract beyond the current state fiscal year. No legal liability on the part of the State for any payment may arise under this Contract beyond the current state fiscal year until funds are made available for performance of this Contract.

4.4 Availability of Funds for the current State fiscal year

Should the State Legislature enter back into session and reduce the appropriations or for any reason and these goods or services are not funded, the State may take any of the following actions:

4.4.1. Accept a decrease in price offered by the contractor;

4.4.2. Cancel the Contract; or

4.4.3. Cancel the contract and re-solicit the requirements

5.0 Contract Changes

5.1 Amendments

This Contract is issued under the authority of the Procurement Officer who signed this Contract. The Contract may be modified only through a Contract Amendment within the scope of the Contract. Changes to the Contract, including the addition of work or materials, the revision of payment terms, or the substitution of work or materials, directed by a person who is not specifically authorized by the procurement officer in writing or made unilaterally by the Contractor are violations of the Contract and of applicable law. Such changes, including unauthorized written Contract Amendments shall be void and without effect, and the Contractor shall not be entitled to any claim under this Contract based on those changes.

5.2 Assignment and Delegation

5.2.1 IN WHOLE. Contractor shall not assign or delegate its duties under the Contract, in whole or in part, without Procurement Officer's prior written consent; Procurement Officer may withhold at his or her discretion. If Contractor's proposed assignment or delegation stems from a split, sale, acquisition, or other non-merger change in control, then no such consent will be given in any event without the assignee or delegate giving State satisfactory and equivalent evidence or assurance of its financial soundness, competency, capacity, and qualification to perform as that which Contractor possessed when State first awarded it the Contract.

5.2.2 IN PART. Subject to paragraph 3.9 (*Subcontracts*) with respect to subcontracting, Contractor may assign particular rights or delegate particular duties under the Contract, but shall obtain Procurement Officer's written consent before doing so. Procurement Officer shall not unreasonably withhold consent so long as the proposed assignment or delegation does not attempt to modify the Contract in any way or to alter or impair State's rights or remedies under the Contract or laws.

6.0 Risk and Liability

6.1 Risk of Loss

Contractor shall bear all risk of loss to Materials if, and as, those duties are within the scope of the Work, until they have been accepted as conforming by State in the manner specified in the Purchase Order, or as specified generally elsewhere in the Contract if the Purchase Order does not provide particulars. Risk of loss for nonconforming Materials will remain with Contractor notwithstanding acceptance to the extent the loss stems from the nonconformance.

6.2 Basic Indemnification

6.2.1 CONTRACTOR/VENDOR (NOT PUBLIC AGENCY). To the fullest extent permitted by law, Contractor shall defend, indemnify, and hold harmless State Indemnitees from Indemnified Basic Claims that: (a) are caused or alleged to be caused in whole or in part by the negligent or willful acts or omissions of a Contractor Indemnitor; (b) arise out of or are recovered under worker compensation laws; and/or (c) arise out of a Contractor Indemnitor's failure to conform to any federal, state, or local law, statute, ordinance, rule, regulation, or court decree. The parties specifically intend that the Contractor Indemnitors shall indemnify the relevant State Indemnitees from and against Indemnified Basic Claims in all instances except where the Indemnified Basic Claim

arises solely from those State Indemnitees' own negligent or willful acts or omissions. Wherever the indemnification under this subparagraph applies, Contractor is responsible for primary loss investigation, defense, and judgment costs for an on behalf of the other Contractor Indemnitors with respect to State Indemnitees, and accordingly Contractor is also responsible for any cooperation, contribution, or subordination between or amongst the Contractor Indemnitors. In consideration of the award of the Contract by a State Indemnitee, Contractor hereby waives all rights of subrogation against State Indemnities for losses arising from the Work.

If Contractor is a public agency, this paragraph does not apply and subparagraph 6.2.1 below applies instead.

6.2.2 PUBLIC AGENCY. Each party (as 'indemnitor') agrees to indemnify, defend, and hold harmless the other party (as 'indemnitee') from and against any and all claims, losses, liability, costs, or expenses (including reasonable attorney's fees) (hereinafter collectively referred to as 'claims') arising out of bodily injury of any person (including death) or property damage but only to the extent that such claims which result in vicarious/derivative liability to the indemnitee, are caused by the act, omission, negligence, misconduct, or other fault of the indemnitor, its officers, officials, agents, employees, or volunteers.

6.2.3 If Contractor is not a public agency, this paragraph does not apply and subparagraph above applies instead.

6.3 Patent and Copyright Indemnification

CONTRACTOR/VENDOR (NOT PUBLIC AGENCY). With respect to Materials or Services provided or proposed by a Contractor Indemnitor for performance under the Contract, Contractor shall indemnify, defend and hold harmless State Indemnitees against any third-party claims for liability, costs, and expenses, including, but not limited to reasonable attorney fees, for infringement or violation of any patent, trademark, copyright, or trade secret by the Materials and the Services. With respect to the defense and payment of claims under this subparagraph:

1. State shall provide reasonable and timely notification to Contractor of any claim for which Contractor may be liable under this paragraph;
2. Contractor, with reasonable consultation from State, shall have control of the defense of any action on an indemnified claim including all negotiations for its settlement or compromise;
3. State may elect to participate in such action at its own expense; and
4. State may approve or disapprove any settlement or compromise, provided that, (i) State shall not unreasonably withhold or delay such approval or disapproval and (ii) State shall cooperate in the defense and in any related settlement negotiations.

If Contractor is a public agency, this paragraph 6.3 does not apply.

6.4 Force Majeure

6.4.1 DEFINITION. For this paragraph, "force majeure" means an occurrence that is (a) beyond the control of the affected party, (b) occurred without the party's fault or negligence, and (c) something the party was unable to prevent by exercising reasonable diligence. Without limiting the generality of the foregoing, force majeure expressly includes acts of God, acts of the public enemy, war, riots, strikes, mobilization, labor disputes, civil disorders, fire, flood, lockouts, injunctions-intervention-acts, failures or refusals to act by government authorities, and, subject to paragraph 7.10 (*Performance in Public Health Emergency)*, declared public health emergencies. Force majeure expressly does not include late delivery caused by congestion at a manufacturer's plant or elsewhere, an oversold condition of the market, late performance by a Subcontractor unless the delay arises out of an occurrence of force majeure, or inability of either Contractor or any Subcontractor to acquire or maintain any required insurance, bonds, licenses, or permits.

6.4.2 RELIEF FROM PERFORMANCE. Except for payment of sums due, the parties are not liable to each other if an occurrence of force majeure prevents its performance under the Contract. If either party is delayed at any time in the progress of their respective performance under the Contract by an occurrence of force majeure, the delayed party

shall notify the other no later than the following working day after the occurrence, or as soon as it could reasonably have been expected to recognize that the occurrence had effect in cases where the effects were not readily apparent. In any event, the notice must make specific reference to this paragraph specifying the causes of the delay in the notice and, if the effects of the occurrence are on-going, provide an initial notification and thereafter the delayed party shall provide regular updates until such time as the effects are fully known. To the extent it is able, the delayed party shall cause the delay to cease promptly and notify the other party when it has done so. The parties shall extend the time of completion by Contract Amendment for a period equal to the time that the results or effects of the delay prevented the delayed party from performing.

6.4.3 EXCUSABLE DELAY IS NOT DEFAULT. Failure in performance by either party will not constitute default hereunder or give rise to any claim for damages or loss of anticipated profits if and to the extent that such failure was or is being caused by an occurrence of force majeure.

6.4.4 DEFAULT DIMINISHES RELIEF. Entitlement to relief from the effects of an occurrence of force majeure is diminished to the extent that the delay did or will result from the affected party's default unrelated to the occurrence, in which case and to that extent the other party's normal remedies and the affected party's obligations would apply undiminished.

6.5 Third Party Antitrust Violations

Contractor assigns to State any claim for overcharges resulting from antitrust violations to the extent that those violations concern materials or services supplied by third parties to Contractor toward fulfillment of the Contract.

7.0 Warranties

7.1 Liens

The Contractor warrants that the materials supplied under this Contract are free of liens and shall remain free of liens.

7.2 Conformity to Requirements

Contractor warrants that, unless expressly provided otherwise elsewhere in the Contract, the Materials and Services will for 1 (one) year after acceptance and in each instance: (1) conform to the requirements of the Contract, which by way of reminder include without limitation all descriptions, specifications, and drawings identified in the Scope of Work and any Contractor affirmations included as part of the Contract; (2) be free from defects of material and workmanship; (3) conform to or perform in a manner consistent with current industry standards; and (4) be fit for the intended purpose or use described in the Contract. Mere delivery or performance does not substitute for express acceptance by State. Where inspection, testing, or other acceptance assessment of Materials or Services cannot be done until after installation, the forgoing warranty will not begin until State's acceptance.

7.3 Quality

Unless otherwise modified elsewhere in these terms and conditions, the Contractor warrants that, for 1 (one) year after acceptance by the State of the materials, they shall be:

7.3.1. Of a quality to pass without objection in the trade under the Contract description;

7.3.2. Fit for the intended purposes for which the materials are used;

7.3.3. Within the variations permitted by the Contract and are of even kind, quantity, and quality within each unit and among all units;

7.3.4. Adequately contained, packaged and marked as the Contract may require; and

7.3.5. Conform to the written promises or affirmations of fact made by the Contractor.

7.4 Inspection/Testing

The warranties set forth in subparagraphs 7.1 through 7.3 of this paragraph are not affected by inspection or testing of or payment for the materials by the State.

7.5 Compliance with Laws

The materials and services supplied under this Contract shall comply with all applicable Federal, state and local laws, and the Contractor shall maintain all applicable license and permit requirements.

7.6 Survival of Rights and Obligations after Contract Expiration or Termination

7.6.1. Contractor's Representations and Warranties. All representations and warranties made by the Contractor under this Contract shall survive the expiration or termination hereof. In addition, the parties hereto acknowledge that pursuant to A.R.S. § 12-510, except as provided in A.R.S. § 12-529, the State is not subject to or barred by any limitations of actions prescribed in A.R.S., Title 12, Chapter 5.

7.6.2. Purchase Orders. The Contractor shall, in accordance with all terms and conditions of the Contract, fully perform and shall be obligated to comply with all purchase orders received by the Contractor prior to the expiration or termination hereof, unless otherwise directed in writing by the Procurement Officer, including, without limitation, all purchase orders received prior to but not fully performed and satisfied at the expiration or termination of this Contract.

7.7 Contractor Personnel

Contractor warrants that its personnel will perform their duties under the Contract in a professional manner, applying the requisite skills and knowledge, consistent with industry standards, and in accordance with the requirements of the Contract. Contractor further warrants that its key personnel will maintain any certifications relevant to their work, and Contractor shall provide individual evidence of certification to State's authorized representatives upon request.

7.8 Intellectual Property

Contractor warrants that the Materials and Services do not and will not infringe or violate any patent, trademark, copyright, trade secret, or other intellectual property rights or laws, except only to the extent the Specifications do not permit use of any other product and Contractor is not and cannot reasonably be expected to be aware of the infringement or violation.

7.9 Operational Continuity

Contractor warrants that it will perform without relief notwithstanding being sold or acquired; no such event will operate to mitigate or alter any of Contractor's duties hereunder absent a consented delegation under paragraph 5.2 (*Assignment and Delegation*) that expressly recognizes the event.

7.10 Performance in Public Health Emergency

Contractor warrants that it will:

1. have in effect promptly after commencement a plan for continuing performance in the event of a declared public health emergency that addresses, at a minimum: (a) identification of response personnel by name; (b) key succession and performance responses in the event of sudden and significant decrease in workforce; and (c) alternative avenues to keep sufficient product on hand or in the supply chain; and
2. provide a copy of its current plan to State within 3 (three) business days after State's written request. If Contractor claims relief under paragraph 6.4 (*Force Majeure*) for an occurrence of force majeure that is a declared public health emergency, then that relief will be conditioned on Contractor having first implemented its plan and exhausted all reasonable opportunity for that plan implementation to overcome the effects of that occurrence, or mitigate those effects to the extent that overcoming entirely is not practicable.

For clarification of intent, being obliged to implement the plan is not of itself an occurrence of force majeure, and Contractor will not be entitled to any additional compensation or extension of time by virtue of having to implement it. Furthermore, failure to have or implement an appropriate plan will be a material breach of contract.

7.11 Lobbying

7.11.1 PROHIBITION.

(a) Contractor warrants that:

i. it will not engage in lobbying activities, as defined in 40 CFR part 34 and A.R.S. § 41-1231, et seq., using monies awarded under the Contract, provided that, the foregoing does not intend to constrain Contractor's use of its own monies or property, including without limitation any net proceeds duly realized under the Contract or any value thereafter derived from those proceeds; and

ii. upon award of the Contract, it will disclose all lobbying activities to State to the extent they are an actual or potential conflict of interest or where such activities could create an appearance of impropriety.

(b) Contractor shall implement and maintain adequate controls to assure compliance with *(a)* above.

(c) Contractor shall obtain an equivalent warranty from all Subcontractors and shall include an equivalent no-lobbying provision in all Subcontracts.

7.11.2 EXCEPTION. This paragraph does not apply to the extent that the Services are defined in the Contract as being lobbying for State's benefit or on State's behalf.

8.0 State's Contractual Remedies

8.1 Right to Assurance

If the State in good faith has reason to believe that the Contractor does not intend to, or is unable to perform or continue performing under this Contract, the Procurement Officer may demand in writing that the Contractor give a written assurance of intent to perform. Failure by the Contractor to provide written assurance within the number of Days specified in the demand may, at the State's option, be the basis for terminating the Contract under the Uniform Terms and Conditions or other rights and remedies available by law or provided by the contract.

8.2 Stop Work Order

8.2.1. The State may, at any time, by written order to the Contractor (the "Stop Work Order"), require the Contractor to stop all or any part, of the work called for by this Contract for period(s) of days indicated by the State in the Stop Work Order. The order shall be specifically identified as a Stop Work Order issued under this clause. Upon receipt of the Stop Work Order, the Contractor shall immediately comply with its terms and take all reasonable steps to minimize the incurrence of costs allocable to the work covered by the Stop Work Order during the period of work stoppage.

8.2.2. If a Stop Work Order issued under this clause is canceled or the period of the order or any extension expires, the Contractor shall resume work. If the Procurement Officer determines that an equitable adjustment is necessary, he or she shall make an equitable adjustment in the delivery schedule or Contract price, or both, and the Contract shall be amended in writing accordingly.

8.3 Non-exclusive Remedies

The rights and the remedies of the State under this Contract are not exclusive.

8.4 Nonconforming Tender

Materials or services supplied under this Contract shall fully comply with the Contract. The delivery of materials or services or a portion of the materials or services that do not fully comply constitutes a breach of contract. On delivery of nonconforming materials or services, the State may terminate the Contract for default under applicable termination clauses in the Contract, exercise any of its rights and remedies under the Uniform Commercial Code, or pursue any other right or remedy available to it.

8.5 Right of Offset

The State shall be entitled to offset against any sums due the Contractor, any expenses or costs incurred by the State, or damages assessed by the State concerning the Contractor's non-conforming performance or failure to perform the Contract, including expenses, costs and damages described in the Uniform Terms and Conditions.

9.0 Contract Termination

9.1 Cancellation for Conflict of Interests

Pursuant to A.R.S. § 38-511, the State may cancel this Contract within three (3) years after Contract execution without penalty or further obligation if any person significantly involved in initiating, negotiating, securing, drafting or creating the Contract on behalf of the State is or becomes at any time while the Contract or an extension of the Contract is in effect an employee of or a consultant to any other party to this Contract with respect to the subject matter of the Contract. The cancellation shall be effective when the Contractor receives written notice of the cancellation unless the notice specifies a later time. If the Contractor is a political subdivision of the State, it may also cancel this Contract as provided in A.R.S. § 38-511.

9.2	**Gratuities**	The State may, by written notice, terminate this Contract, in whole or in part, if the State determines that employment or a Gratuity was offered or made by the Contractor or a representative of the Contractor to any officer or employee of the State for the purpose of influencing the outcome of the procurement or securing the Contract, an amendment to the Contract, or favorable treatment concerning the Contract, including the making of any determination or decision about contract performance. The State, in addition to any other rights or remedies, shall be entitled to recover exemplary damages in the amount of three times the value of the Gratuity offered by the Contractor.
9.3	**Suspension or Debarment**	The State may, by written notice to the Contractor, immediately terminate this Contract if the State determines that the Contractor has been debarred, suspended or otherwise lawfully prohibited from participating in any public procurement activity, including but not limited to, being disapproved as a subcontractor of any public procurement unit or other governmental body. Submittal of an offer or execution of a contract shall attest that the contractor is not currently suspended or debarred. If the contractor becomes suspended or debarred, the contractor shall immediately notify the State.
9.4	**Termination for Convenience**	The State reserves the right to terminate the Contract, in whole or in part at any time when in the best interest of the State, without penalty or recourse. Upon receipt of the written notice, the Contractor shall stop all work, as directed in the notice, notify all subcontractors of the effective date of the termination and minimize all further costs to the State. In the event of termination under this paragraph, all documents, data and reports prepared by the Contractor under the Contract shall become the property of and be delivered to the State upon demand. The Contractor shall be entitled to receive just and equitable compensation for work in progress, work completed and materials accepted before the effective date of the termination.
9.5	**Termination for Default**	9.5.1. In addition to the rights reserved in the contract, the State may terminate the Contract in whole or in part due to the failure of the Contractor to comply with any term or condition of the Contract, to acquire and maintain all required insurance policies, bonds, licenses and permits, or to make satisfactory progress in performing the Contract. The Procurement Officer shall provide written notice of the termination and the reasons for it to the Contractor. 9.5.2. Upon termination under this paragraph, all goods, materials, documents, data and reports prepared by the Contractor under the Contract shall become the property of and be delivered to the State on demand. 9.5.3. The State may, upon termination of this Contract, procure, on terms and in the manner that it deems appropriate, materials or services to replace those under this Contract. The Contractor shall be liable to the State for any excess costs incurred by the State in procuring materials or services in substitution for those due from the Contractor.
9.6	**Continuation of Performance Through Termination**	The Contractor shall continue to perform, in accordance with the requirements of the Contract, up to the date of termination, as directed in the termination notice.

10.0 Contract Claims

10.1	**Claim Resolution**	Notwithstanding any law to the contrary, all contract claims or controversies under the Contract are to be resolved according to the Arizona Procurement Code, including judicial review under A.R.S. § 12-1518.
10.2	**Arbitration**	The parties to this Contract agree to resolve all disputes arising out of or relating to this Contract through arbitration, after exhausting applicable administrative review, to the extent required by A.R.S. § 12-1518, except as may be required by other applicable statutes (Title 41).

End of Section 2-D

End of Part 2

Attachment 3-C

Proposed Subcontractors

Check "NO" if you **WILL NOT** subcontract any portion of the Work and will therefore be carrying out all of the Work with your own personnel.

○	NO, the Offeror will not subcontract any portion of the Work.

If you WILL subcontract any portion of the Work, check "YES" below and list name of persons or companies you propose to use as subcontractors.

1. Fill in the information for every significant subcontractor – indicate the type of work the subcontractor will perform under the Contract, and their approximate percentage of the total Contract work.
2. Provide copies of relevant certifications each one possesses in the Attachment Supplements section.
3. Provide description of quality assurance methods and quality control measures that you will use to ensure that Subcontractor work meets the Contract requirements.
4. State may demand additional information about proposed subcontractors as a precondition of award.

●	YES, the Offeror will use the Subcontractors listed below:

	Name and contact information	Small Business	Work to be performed	%
1.	Gila Electronics 2481 E Palo Verde St Yuma, AZ 85365 (928) 726-0896	YES	Front-line sales, support, engineering, and field service as a regional Manufacturer's Representative ("MR") of Motorola serving primarily Yuma, La Paz, and Mohave counties.	5
2.	ADW Communications 14350 N 87th St #145 Scottsdale, AZ 85260 (480) 291-6820	YES	Provides turnkey project management, engineering, and construction services for wireless infrastructure.	5
3.	Mangum Civil Constructors, Inc., 1075 E Salter Dr Phoenix, AZ 85024 (602) 466-3926	YES	Full range of construction and technical services in the general and wireless construction industry and are an "In-House" builder with it's own civil, tower, DC and fiber crews	5
4.	High Desert Communications, Inc., 372 W Cullumber Ave Gilbert, AZ 8523 (480) 632-0020	NO	Full service communication site/tower design, engineering, installation, and ongoing support.	5
5.	NB Construction, Inc., 16602 N 23rd Ave Ste 111 Phoenix, AZ 85023 (480) 947-3599	NO	Provider of wireless communications site development services for government, enterprise and commercial carriers.	5

6.	Arizona West Builders, Inc., 7515 S Atwood Mesa, AZ 85212 (480) 988-3630	NO	Licensed general contractor that specializes in "turn-key" construction and maintenance solutions for the cellular industry including tower erection, foundations, excavations, electrical, RF and microwave installation/services, site surveys, power and Telco coordination services.	5
7.	Pyramid Network Services, LLC. 6615 Towpath Road East Syracuse, NY 13057 (315) 701-1300	NO	Pyramid is Motorola Solutions largest preferred vendor for site development services across the United States and Canada, and has completed over 340 distinct public safety projects. Pyramid Network Services—is a leading nationwide turnkey communications systems contractor delivering cost effective solutions to design, develop and deploy wireless communications networks for both commercial carriers AND Federal, State, & Local public safety agencies.	5

End of Attachment 3-C

Attachment 5-B

Conformance Statements

STATE WILL NOT CONSIDER ANY EXCEPTIONS UNLESS DESIGNATED ON THIS FORM.

READ PARAGRAPH **ERROR! REFERENCE SOURCE NOT FOUND.** OF THE INSTRUCTIONS TO OFFERORS BEFORE TAKING ANY EXCEPTIONS – TAKING EXCEPTIONS CAN BE GROUNDS FOR STATE REJECTING OR DOWN-GRADING YOUR OFFER IN EVALUATION.

CONFORMANCE TO THE INSTRUCTIONS:
(PART 3 OF THE SOLICITATION)

Check one of the following – if neither is checked, State will assume that as equivalent to "YES":

○ YES – Offeror acknowledges that it has read and understands the Instructions to Offerors in Section 3-A of the Solicitation Documents and attests that its Offer complies with both.

● NO – Offeror acknowledges that it has read and understands the Instructions to Offerors in Section 3-A of the Solicitation Documents, and attests that its Offer complies with both EXCEPT FOR the exceptions listed in **Attachment 5-B Supplement 1**.

CONFORMANCE TO THE TECHNICAL DOCUMENTS:
(PART 2 OF THE SOLICITATION)

Check one of the following – if neither is checked, State will assume that as equivalent to "YES":

○ YES – Offeror acknowledges that it has read and understands the Scope Document and the Pricing Document in Part 2 of the Solicitation Documents and attests that its Offer complies with both.

● NO – Offeror acknowledges that it has read and understands the Scope Document and the Pricing Document in Part 2 of the Solicitation Documents and attests that its Offer complies with both EXCEPT FOR the exceptions listed in **Attachment 5-B Supplement 2**.

CONFORMANCE TO THE CONTRACT TERMS AND CONDITIONS:
(PART 2 OF THE SOLICITATION)

Check one of the following – if neither is checked, State will assume that as equivalent to "YES":

○ YES – Offeror acknowledges that it has read and understands the Special Terms and Conditions and the Uniform Terms and Conditions, along with their respective Exhibits and Appendices, in Part 2 of the Solicitation Documents and attests that its Offer complies with both.

● NO – Offeror acknowledges that it has read and understand the Special Terms and Conditions and the Uniform Terms and Conditions, along with their respective Exhibits and Appendices in Part 2 of the Solicitation Documents and attests that its Offer complies with both EXCEPT FOR the exceptions listed in **Attachment 5-B Supplement 3**.

ATTACHMENT 5-B Supplement No. 1:

Exceptions to Instructions

Article / Paragraph or Exhibit Reference	Proposed Changes / Alternate Language	Rationale for Proposed Change
Section 1-A: Solicitation Details		
x	x	x
x	x	x
x	x	x
Section 1-B: Instructions to Offerors		
6.3 Cost or Pricing Data	Pursuant to A.R.S § 41-2543 per A.A.C. R2-7-702(B)(2), Motorola certifies to the best of its knowledge and belief the pricing provided within its response is accurate, complete and current. Motorola will cooperate with reasonable requests for pricing validity information but will not be required to provide its internal cost and pricing data which it considers confidential and proprietary information.	9.16.19 See attached Change Log to Attachment 5-B Exceptions, ("5-B Change Log").

Motorola Solutions, Inc.

Company Name

Signature of Person Authorized to Sign

NOTE: Offeror must sign and return all Attachment 5-B Supplements Nos. 1 – 3 (even if not submitting exceptions)

ATTACHMENT 5-B Supplement No. 2:

Exceptions to Technical and Commercial

Article / Paragraph or Exhibit Reference	Proposed Changes / Alternate Language	Rationale for Proposed Change
Section 2-A: Scope of Work (Technical Document)		
2.49.4 E&M / DC Control	Comply with clarification, No DC Control, Exception on DC Contact Keying	9.16.19 See attached 5-B Change Log for all Section 2-A.
2.52.1 Physical Construction	Comply w/ one exception 36.8 lbs x	
2.52.5	Exception 10Mhz to 1050Mhz (useable from 100kHz); Optional to 2700MHz	
2.55.1 x	Exception 10Mhz to 1050Mhz (useable from 100kHz); Optional to 2700MHz	
3.23.1x	Exception- PTP820 doesn't provide way-side service channel.	
3.37 Feed Connection	Exception-TNC connectors	
3.39.1	Exception – 100/200KHz options not supported (OK) - cnReach is a software defined radio. In 900 MHz MAS band current max bandwidth is 50 kHz but 100/200 kHz channels can be added via roadmap.	
Capacity Received Signal Level (RSL) in dBm (c) 28 - DS-1 / 10 MHz -73 76 73 76 77	Exception-not offered	
Capacity Received Signal Level (RSL) in dBm d) 84 - DS-1 / 30 MHz -68 72 69 71 73	Exception not offered	

Capacity Received Signal Level (RSL) in dBm (b) 28 - DS-1 / 10 MHz -80	Exception not offered	
Capacity Received Signal Level (RSL) in dBm (c) 84 - DS-1 / 30 MHz -67 73	Exception not offered	
Capacity Received Signal Level (RSL) in dBm (b) 28 - DS-1 - 78	Exception not offered	
Capacity Received Signal Level (RSL) in dBm (c) 84 - DS-1 - 68 73	Exception not offered	
4.5.1	**Exception-Motorola has a 2-yr standard warranty on microwave and LMR antennas. If any products are discontinued Motorola will be able to provide spare parts and repair for a period of 7 yrs.**	
5.15.12	Motorola does not support DC control	
5.16.2 Panel Wiring/Remote Electronic Circuitry- FPD consoles (a)	Exception CAT5e cable range is only 100 mts. However, Motorola can provide a fiber link to connect the base station to the Conventional interface.	
5.16.2 Panel Wiring/Remote Electronic Circuitry- FPD consoles (b)	Exception CAT5e cable range is only 100 mts. However, Motorola can provide a fiber link to connect the base station to the Conventional interface.	
5.16.5 Maintainability (a)	Exception Motorola's CCGWs can support from 1 to 8 channels per module.	

Section 2-B: Commercial Document

Section 2.1 Contractor Best Pricing	Motorola takes exception to this provision and requires its removal.	Motorola Solutions builds communication equipment, systems and solutions that do not fit within a standard conventional pricing framework. Due to the unique pricing and design specifications for each customer's communication equipment, system and solution requirements, Motorola Solutions cannot guarantee that the pricing offered in this proposal is no higher or lower than prices offered to other customers. 9.16.19 See attached x5-B Change Log.

Motorola Solutions, Inc.

Company Name

Signature of Person Authorized to Sign

NOTE: Offeror must sign and return all Attachment 5-B Supplements Nos. 1 – 3 (even if not submitting exceptions)

ATTACHMENT 5-B Supplement No. 3:

Exceptions to Contract Terms & Conditions

Article/ Paragraph or Exhibit Reference	Proposed Changes / Alternate Language	Rationale for Proposed Change
Section 3-A: Special Terms & Conditions		
Section 6.1 Contractor Insurance Indemnification Clause	Motorola complies with the general indemnification described in this section subject to removing the words “or intangible” and “arising or recovered under the Worker’s Compensation Law”.	Motorola believes that Workers Compensation is provided for and covered in Subsection 6.1.3. The proposed edits are consistent with the indemnification language agreed by the State in previous contracts, including ADSPO13-036880. 9.16.19 See attached 5-B Change Log
Section 6.1 Contractor Insurance- Insurance Requirements	Please see the attached proposed modifications for how Motorola can comply with the State's insurance requirements	The parties have previously negotiated an insurance module in the Arizona Department of Transportation Solicitation # T11-43-00008, agreed as applicable to ADSPO13-036880. Motorola’s Corporate Insurance Department believes that the changes it has made to this section are in line with what has been previously negotiated and agreed upon between the State and Motorola. 9.16.19 see attached 5-B Change Log
Section 13.1 Applicability	Motorola complies with the language with the removal of the words 'or from others at State's behest.'	It is unclear if Motorola has a contractual relationship with the 3rd party. 9.16.19 See attached 5-B Change Log

Section 13.2 Data Protection & Confidentiality	Motorola proposes the following language in lieu of the RFP language: Contractor warrants that, to the extent the Work includes (1) or (2) above, it will establish and maintain procedures and controls for ensuring that State's proprietary and sensitve data is protected from unauthorized access and that information obtained from the State in performance of its contractual duties is not mishandled, misused, or inappropriately released or disclosed. Contractor, the third party manufacturer, and the copyright owner of any non-Contractor software own and retain all of their repective proprietary rights in the equipment and software, and nothing in this Article 13 is intended to restrict their proprietary rights. All intellectual property developed, originated, or prepared by Contractor in connection with providing to State the Work remain vested exclusively in Contractor, and this Article 13 does not grant to State, either directly or by implication, estoppel, or otherwise, any right, title or interest in Contractor's Proprietary Rights.	The RFP language "all data created by Contractor" in the next to last sentence of the first paragraph in this section implies transfer of IP rights, which is not contemplated in the work Motorola would be performing. 9.16.19 See attached 5-B Change Log.
Section 13.2.1 Data Protection & Confidentiality	Motorola complies with the language in 13.2.1.a and b with the following suggested modifications: (1) with the replacement of 'immediately' with 'promptly' and (2) in 13.2.1.b with the insertion of 'reasonably' at the beginning of the statement. Motorola takes exception to 13.2.c and requests its removal.	Motorola requests these modifications to be in line with industry standard language. Regarding 13.2.c., it is not reasonably practicable to notify the State to every possible threat which might affect the system. 9.16.19 See attached 5-B Change Log.
Section 13.2.2 Data Protection & Confidentiality	**Motorola complies with the language in 13.2.2.a with the insertion of 'except as required by law' a the beginning of the statement.**	**Motorola requests these modifications to be in line with industry standard language.** 9.16.19 See attached 5-B Change Log.
Section 13.3.2 Personally Identifiable Information	**Motorola clarifies that it maintains industry standard security measures to protect the Solution from intrusion, breach, corruption, or other security risk. Please see Section 4.1 of the attached Subscription Services Addendum for more information on Motorola's compliance with security standards.**	**Motorola asserts it is CJIS compliant.** 9.16.19 See attached 5-B Change Log.

Section 14.3.3 Access Control	**Motorola proposes the inclusion of the following language within this section: To the extent permitted by law, State retains ownership of State Data. State grants Motorola and its subcontractors a personal, royalty-free, non-exclusive license to use, host, cache, store, reproduce, copy, modify combine, analyze, create derivatives from, communicate, transmit, publish, display, and distribute such State Data for the purpose of providing the Subscription Services to State, other Motorola customers and end users. In addition to the rights listed above, State grants Motorola a license to sell an Anonymized version of State Data for any purpose.**	**Motorola requests the ability to retain rights to use anonymized and derivative data for purposes of improving its product.** 9.16.19 See attached 5-B Change Log.
Section 14.4 Pass-through Indemnity	**Motorola proposes the language in Section 3 of the Additional Provisions in place of the RFP language regarding infringement indemnity:**	**Motorola requests the use of its standard intellectual properity infringement indemnities for its solutions.** 9.16.19 See attached 5-B Change Log.
Section 14.8.2.b Information Technology Warranty	**Motorola proposes the following language in lieu of the RFP: At Customer's request, Motorola will make every reasonable effort to test and verify specific anti-virus, anti-worm, or anti-hacker patches against a replication of Customer's application. Motorola will respond to any reported problem as an escalated support call.**	**As is industry standard, Motorola does not provide a warranty against worms and viruses.** 9.16.19 See attached 5-B Change Log.
Section 14.11.2 Cloud Applications	**Motorola requests 'serious flaws' be expressly defined. Motorola will not allow either State or third-party penetration testing from within Motorola's system**	**Requested definition to clarify between the parties what errors are agreed as serious meriting correction. Motorola's security policies do not allow outside-Motorola entities access to Motorola's internal system for penetration testing.** 9.16.19 See attached 5-B Change Log.

Section 14.11.3 Cloud Applications	**Motorola proposes the following language: Contract will submit a copy of system logs specific to the State from cloud system to State of AZ security team on an annual basis to be added to the State SIEM (Security Information Event Monitor) or IDS (Intrusion Detection System).**	**Motorola requests clarity on what logs are being requested and the proposed regularity of such requests.** 9.16.19 See attached 5-B Change Log.
Section 15.1 Drug Testing Program	**Motorola affirms that all employees are required to submit to a five-panel drug screen at the time of hire, where permitted by law. If Motorola is awarded the contract, Motorola agrees to discuss the need for additional drug tests of Motorola employees and to negotiate a contractual provision that is mutually acceptable and compliant with applicable law. However, in no event can Motorola agree to waive the rights of its employees, nor can Motorola provide the Customer with any information protected by law, including but not limited to drug test results.**	**Motorola cannot agree to waive the rights of its employees or to providing information protected by law, including drug test results.** 9.16.19 See attached 5-B Change Log.

Article/ Paragraph or Appendix Reference	Proposed Changes / Alternate Language	Rationale for Proposed Change
Section 3-B: Uniform Terms & Conditions		
Section 3.1 Books and Records; Audit	Motorola understands and will comply with all applicable Arizona statutes with the clarifying assertion that Motorola considers its books and records, including those related to product cost data, to be trade secrets, confidential or proprietary and as may be provided by Arizona law, should not be used, duplicated or disclosed to any other third party.	Motorola considers its internal books and records confidential and proprietary information. 9.16.19 See attached 5-B Change Log.

Section 3.4 Inspection and Testing	Motorola acknowledges the State's right to inspect materials, equipment and workmanship at Motorola manufacturing or staging facilities for the limited purpose of evaluating Motorola's performance of this Agreement. Motorola requires thirty days' written notice prior to the inspection of any facility and the State will be responsible for its own costs associated with such inspection. Motorola will restrict inspection of its facilities to areas that are relevant to the performance of the Contract, and to areas which Motorola Solutions does not consider confidential or proprietary in nature. A Motorola representative must accompany State's employees at all times."	Motorola requires sufficient notice of State's intent to inspect Motorola facilities. 9.16.19 See attached 5-B Change Log.
Section 3.8 Ownership of Intellectual Property	It is Motorola's understanding from past dealings with the State Procurement Office that the State is not interested in obtaining ownership interest in any intellectual property and accordingly, these sections, or any other section that may give ownership rights in intellectual property, are not applicable and be of no cause and effect in this contract.	Motorola is providing products and services that are commercially available to any customer and does not intend to perform any Works For Hire. The Pricing included in Motorola's proposal does not reflect the transfer of any intellectual property rights to the State. If performance results in the development of new proprietary and secret concepts, methods, techniques, processes, adaptations, discoveries, improvements and ideas ("Discoveries"), such Discoveries and the intellectual property embodied therein will be owned exclusively by Motorola. If subsequently the State elects to purchase and Motorola elects to sell development services that are intended to result in a new product to be owned by the State, the parties will execute a separate development or Work for Hire agreement. 9.16.19 See attached 5-B Change Log.

Section 6.2 Basic Indemnification	Motorola proposes that all indemnification be handled as provided for in Subsection 6.1- Indemnification of the Special Terms and Conditions.	Motorola believes that Workers Compensation is provided for and covered in Subsection 6.1.3 of the Special Terms and Conditions in Section 2-C. The proposed edits are consistent with the indemnification language agreed by the State in previous contracts, including ADSPO13-036880. 9.16.19 See attached 5-B Change Log.
Section 6.3 Patent and Copyright Indemnification	Please see Section 3 of the attached Additional Provisions which describe Motorola's IP Infringement Indemnifications.	Motorola requests the use of its standard intellectual properity infringement indemnities for its solutions. 9.16.19 See attached 5-B Change Log.
Section 7.2 and 7.3 Conformity and Quality	Please see the attached Section 1 of the Additional Provisions below which explain Motorola's suggested way to address warranty which is in a like manner as in the current contracts between the parties for similar products (i) ADSPO13-036613 and (ii) ADSPO13-036880.	Motorola proposes addressing the State's warranty requirements in a manner consistent with previous contracts. 9.16.19 See attached 5-B Change Log.
Section 9.5.3 Termination for Default	Motorola complies subject to excess costs being reasonable and for materials and services not exceeding that specified in the contract less the unpaid portion of the contract price.	Motorola proposes the suggested modifications to clarify termination costs to be reasonable. 9.16.19 See attached 5-B Change Log.
5C Insurance Certificate	Please see Motorola's Evidence of Coverage Certificate and modifications to the Special Terms and Conditions, Section 6.2, for Motorola's coverage details. Motorola agrees all COI, endorsements and waivers must be valid and provided via email to State Contract Manager within 30 days of contract execution and before any work commences. Motorola's surety requires a signed agreement prior to issuing COI.	9.16.19 See attached 5-B Change Log.

Motorola Solutions, Inc.

Company Name | Signature of Person Authorized to Sign

NOTE: Offeror must sign and return all Attachment 5-B Supplements Nos. 1 – 3 (even if not submitting exceptions)

End of Attachment 5-B

State Response to Exceptions
Motorola Change Log/Revised Attachment 5-B Exceptions 9.16.19

ATTACHMENT 5-B Supplement No. 1:

Exceptions to Instructions

Article / Paragraph or Exhibit Reference	Proposed Changes / Alternate Language	Rationale for Proposed Change	S
Section 1-A: Solicitation Details			
x	None	x	
Section 1-B: Instructions to Offerors			
6.3 Cost or Pricing Data	Pursuant to A.R.S § 41-2543 per A.A.C. R2-7-702(B)(2), Motorola certifies to the best of its knowledge and belief the pricing provided within its response is accurate, complete and current. Motorola will cooperate with reasonable requests for pricing validity information but will not be required to provide its internal cost and pricing data which it considers confidential and proprietary information.	Public exposure of Motorola's internal costs and pricing would put it at a severe competitive disadvantage.	Rejected, exception not acc off list data is required as pa confdential per R2-7-103.

ATTACHMENT 5-B Supplement No. 2:

Exceptions to Technical and Commercial

Article / Paragraph or Exhibit Reference	Proposed Changes / Alternate Language	Rationale for Proposed Change	S
Section 2-A: Scope of Work (Technical Document)			
2.49.4 E&M / DC Control	Comply with clarification, No DC Control, Exception on DC Contact Keying	x	Accept, the exception is acc stated in Section 2-A Scope contract, The State may cho clarifications impact product
2.52.1 Physical Construction	Comply w/ one exception 36.8 lbs x	x	Accept, the exception is acc stated in Section 2-A Scope contract, The State may cho clarifications impact product
52.5	Exception 10Mhz to 1050Mhz (useable from 100kHz); Optional to 2700MHz	x	Accept, the exception is acc stated in Section 2-A Scope

3.39.1	Exception – 100/200KHz options not supported (OK) - cnReach is a software defined radio. In 900 MHz MAS band current max bandwidth is 50 kHz but 100/200 kHz channels can be added via roadmap.		Accept, the exception is acc stated in Section 2-A Scope contract, The State may cho clarifications impact product
Capacity Received Signal Level (RSL) in dBm (c) 28 - DS-1 / 10 MHz -73 76 73 76 77	Exception-not offered		Rejected, exception not acc concerns the clause must re just ignore this section.
Capacity Received Signal Level (RSL) in dBm d) 84 - DS-1 / 30 MHz -68 72 69 71 73	Exception-not offered		Rejected, exception not acc concerns the clause must re just ignore this section.
Capacity Received Signal Level (RSL) in dBm (b) 28 - DS-1 / 10 MHz -80	Exception-not offered		Rejected, exception not acc concerns the clause must re just ignore this section.
Capacity Received Signal Level (RSL) in dBm (c) 84 - DS-1 / 30 MHz -67 73	Exception-not offered		Rejected, exception not acc concerns the clause must re just ignore this section.
Capacity Received Signal Level (RSL) in dBm (b) 28 - DS-1 - 78	Exception-not offered		Rejected, exception not acc concerns the clause must re just ignore this section.
Capacity Received Signal Level (RSL) dBm) 84 - DS-1 - 68 73	Exception-not offered		Rejected, exception not acc concerns the clause must re just ignore this section.

5.16.2 Panel Wiring/Remote Electronic Circuitry-FPD consoles (b)	Exception CAT5e cable range is only 100 mts. However, Motorola can provide a fiber link to connect the base station to the Conventional interface.		Accept, the exception is acc stated in Section 2-A Scope contract, The State may cho clarifications impact product
5.16.5 Maintainability (a)	Exception Motorola's CCGWs can support from 1 to 8 channels per module.		Accept, the exception is acc stated in Section 2-A Scope contract, The State may cho clarifications impact product
Section 2-B: Commercial Document			
Section 2.1 Contractor Best Pricing	Motorola takes exception to this provision and requires its removal.	Motorola Solutions builds communication equipment, systems and solutions that do not fit within a standard conventional pricing framework. Due to the unique pricing and design specifications for each customer's communication equipment, system and solution requirements, Motorola Solutions cannot guarantee that the pricing offered in this proposal is no higher or lower than prices offered to other customers.	Rejected, exception not acc and uniformity of contract la

Section 6.1 Contractor Insurance Indemnification Clause	Motorola complies with the general indemnification described in this section subject to removing the words “or intangible” and “arising or recovered under the Worker’s Compensation Law”.	Motorola believes that Workers Compensation is provided for and covered in Subsection 6.1.3. The proposed edits are consistent with the indemnification language agreed by the State in previous contracts, including ADSPO13- 036880.	Rejected, exception not acce Please be specific in your re previous contracts (7-9 years 8-8-19 Please see attachme FINAL Attachment 5-A Conf Response 8-8-19
Section 6.1 Contractor Insurance- Insurance Requirements	Please see the attached proposed modifications for how Motorola can comply with the State's insurance requirements	The parties have previously negotiated an insurance module in the Arizona Department of Transportation Solicitation # T11-43-00008, agreed as applicable to ADSPO13-036880. Motorola’s Corporate Insurance Department believes that the changes it has made to this section are in line with what has been previously negotiated and agreed upon between the State and Motorola.	Rejected, exception not acce Please be specific in your re previous contracts (7-9 years 8-8-19 Please see attachme FINAL Attachment 5-A Conf Response 8-8-19 9-6-19 State will discuss du
Section 13.1 Applicability	Motorola complies with the language with the removal of the words 'or from others at State's behest.'	It is unclear if Motorola has a contractual relationship with the 3rd party.	Rejected, exception not acce and uniformaity of contract la
Section 13.2 Data Protection & Confidentiality	Motorola proposes the following language in lieu of the RFP language: Contractor warrants that, to the extent the Work includes (1) or (2) above, it will establish and maintain procedures and controls for ensuring that State's proprietary and sensitve data is protected from unauthorized access and that information obtained from the State in performance of its contractual duties	The RFP language "all data created by Contractor" in the next to last sentence of the first paragraph in this section implies transfer of IP rights, which is not contemplated in the work Motorola would be performing.	Rejected, exception not acce and uniformaity of contract la 7/25/19 - State added langu requirements will be defined

Section 13.2.1 Data Protection & Confidentiality	Motorola complies with the language in 13.2.1.a and b with the following suggested modifications: (1) with the replacement of 'immediately' with 'promptly' and (2) in 13.2.1.b with the insertion of 'reasonably' at the beginning of the statement. Motorola takes exception to 13.2.c and requests its removal.	Motorola requests these modifications to be in line with industry standard language. Regarding 13.2.c., it is not reasonably practicable to notify the State to every possible threat which might affect the system.	Rejected, exception not acce and uniformaity of contract la 7/25/19 - State added langu requirements will be defined
Section 13.2.2 Data Protection & Confidentiality	Motorola complies with the language in 13.2.2.a with the insertion of 'except as required by law' a the beginning of the statement.	Motorola requests these modifications to be in line with industry standard language.	Rejected, exception not acce and uniformaity of contract la 7-25-19 - The State accepts
Section 13.3.2 Personally Identifiable Information	Motorola clarifies that it maintains industry standard security measures to protect the Solution from intrusion, breach, corruption, or other security risk. Please see Section 4.1 of the attached Subscription Services Addendum for more information on Motorola's compliance with security standards.	Motorola asserts it is CJIS compliant.	Rejected, exception not acce the States requirements at a
Section 14.3.3 Access Control	Motorola proposes the inclusion of the following language within this section: To the extent permitted by law, State retains ownership of State Data. State grants Motorola and its subcontractors a personal, royalty-free, non-exclusive license to use, host, cache, store, reproduce, copy, modify combine, analyze, create derivatives from, communicate, transmit, publish, display, and distribute such State Data for the purpose of providing the Subscription Services to State, other Motorola customers and end users. In addition to the rights listed above, State grants Motorola a license to sell an Anonymized version of State Data for any purpose.	Motorola requests the ability to retain rights to use anonymized and derivative data for purposes of improving its product.	Rejected, exception not acce
Section 14.4 Pass-through Indemnity	Motorola proposes the language in Section 3 of the Additional Provisions in place of the RFP language regarding infringement indemnity:	Motorola requests the use of its standard intellectual properity infringement indemnities for its solutions.	Rejected - Any compromise that reduces protection or sh are in direct violation of A.R. State cannot accept this exc

Section 14.11.2 Cloud Applications	Motorola requests 'serious flaws' be expressly defined. Motorola will not allow either State or third-party penetration testing from within Motorola's system	Requested definition to clarify between the parties what errors are agreed as serious meriting correction. Motorola's security policies do not allow outside-Motorola entities access to Motorola's internal system for penetration testing.	Rejected, exception not acce 7/25/19 - State added langu requirements will be defined
Section 14.11.3 Cloud Applications	Motorola proposes the following language: Contract will submit a copy of system logs specific to the State from cloud system to State of AZ security team on an annual basis to be added to the State SIEM (Security Information Event Monitor) or IDS (Intrusion Detection System).	Motorola requests clarity on what logs are being requested and the proposed regularity of such requests.	Rejected, exception not acce 7/25/19 - State added langu requirements will be defined
Section 15.1 Drug Testing Program	Motorola affirms that all employees are required to submit to a five-panel drug screen at the time of hire, where permitted by law. If Motorola is awarded the contract, Motorola agrees to discuss the need for additional drug tests of Motorola employees and to negotiate a contractual provision that is mutually acceptable and compliant with applicable law. However, in no event can Motorola agree to waive the rights of its employees, nor can Motorola provide the Customer with any information protected by law, including but not limited to drug test results.	Motorola cannot agree to waive the rights of its employees or to providing information protected by law, including drug test results.	Rejected, exception not acce
Section 3-B: Uniform Terms & Conditions			
Section 3.1 Books and ecords; Audit	Motorola understands and will comply with all applicable Arizona statutes with the clarifying assertion that Motorola considers its books and records, including those related to product cost data, to be trade secrets, confidential or proprietary and as	Motorola considers its internal books and records confidential and proprietary information.	Rejected, exception not acce modify the Uniform Terms a to be documented and addr

Section 3.4 Inspection and Testing	Motorola acknowledges the State's right to inspect materials, equipment and workmanship at Motorola manufacturing or staging facilities for the limited purpose of evaluating Motorola's performance of this Agreement. Motorola requires thirty days' written notice prior to the inspection of any facility and the State will be responsible for its own costs associated with such inspection. Motorola will restrict inspection of its facilities to areas that are relevant to the performance of the Contract, and to areas which Motorola Solutions does not consider confidential or proprietary in nature. A Motorola representative must accompany State's employees at all times."	Motorola requires sufficient notice of State's intent to inspect Motorola facilities.	Rejected, exception not acce modify the Uniform Terms ar to be documented and addre
Section 3.8 Ownership of Intellectual Property	It is Motorola's understanding from past dealings with the State Procurement Office that the State is not interested in obtaining ownership interest in any intellectual property and accordingly, these sections, or any other section that may give ownership rights in intellectual property, are not applicable and be of no cause and effect in this contract.	Motorola is providing products and services that are commercially available to any customer and does not intend to perform any Works For Hire. The Pricing included in Motorola's proposal does not reflect the transfer of any intellectual property rights to the State. If performance results in the development of new proprietary and secret concepts, methods, techniques, processes, adaptations, discoveries, improvements and ideas ("Discoveries"), such Discoveries and the intellectual property embodied therein will be owned exclusively by Motorola. If subsequently the State elects to purchase and Motorola elects to sell development services that are intended to result in a new product to be owned by the State, the parties will execute a separate development or Work for Hire agreement.	Rejected, exception not acce modify the Uniform Terms ar to be documented and addre If it's not applicable, Offeror s
Section 6.2 Basic	Motorola proposes that all indemnification be handled as provided for in Subsection 6.1- Indemnification of	Motorola believes that Workers Compensation is provided for	Rejected, exception not acce modify the Uniform Terms ar

Section 6.3 Patent and Copyright Indemnification	Please see Section 3 of the attached Additional Provisions which describe Motorola's IP Infringement Indemnifications.	Motorola requests the use of its standard intellectual properity infringement indemnities for its solutions.	Rejected, exception not acc modify the Uniform Terms a to be documented and addr
Section 7.2 and 7.3 Conformity and Quality	Please see the attached Section 1 of the Additional Provisions below which explain Motorola's suggested way to address warranty which is in a like manner as in the current contracts between the parties for similar products (i) ADSPO13-036613 and (ii) ADSPO13-036880.	Motorola proposes addressing the State's warranty requirements in a manner consistent with previous contracts.	Rejected, exception not acc modify the Uniform Terms a to be documented and addr
Section 9.5.3 Termination for Default	Motorola complies subject to excess costs being reasonable and for materials and services not exceeding that specified in the contract less the unpaid portion of the contract price.	Motorola proposes the suggested modifications to clarify termination costs to be reasonable.	Rejected, exception not acc modify the Uniform Terms a to be documented and addr Please see Uniform Terms a Contractual Remidies the St Termination.

6.0 Risk and Liability

6.1 Contractor Insurance

Please see following proposed modifications to the Insurance provisions. Motorola also encloses its Evidence of Coverage certificate.

Insurance Requirements

Contractor and subcontractors shall procure and maintain, until all of their obligations have been discharged, including any warranty periods under this Contract, insurance against claims for injury to persons or damage to property arising from, or in connection with, the performance of the work hereunder by the Contractor, its agents, representatives, employees or subcontractors.

The Insurance Requirements herein are minimum requirements for this Contract and in no way limit the indemnity covenants contained in this Contract. The State of Arizona in no way warrants that the minimum limits contained herein are sufficient to protect the Contractor from liabilities that arise out of the performance of the work under this Contract by the Contractor, its agents, representatives, employees or subcontractors, and the Contractor is free to purchase additional insurance.

Minimum Scope and Limits of Insurance

Contractor shall provide coverage with limits of liability not less than those stated below.

1. Commercial General Liability (CGL) – Occurrence Form

Policy shall include bodily injury, property damage, and broad form contractual liability coverage.

- General Aggregate $2,000,000
- Products – Completed Operations Aggregate $1,000,000
- Personal and Advertising Injury $1,000,000
- Damage to Rented Premises $50,000
- Each Occurrence $2,000,000

The policy shall be endorsed, as required by this written agreement, to include the State of Arizona, and its departments, agencies, boards, commissions, universities, officers, officials, agents, and employees as additional insureds with respect to liability arising out of the activities performed by or on behalf of the Contractor.

Policy shall contain a waiver of subrogation endorsement, as required by this written agreement, in favor of the State of Arizona, and its departments, agencies, boards, commissions, universities, officers, officials, agents, and employees for losses arising from work performed by or on behalf of the Contractor.

The policy shall include coverage for Sexual Abuse and Molestation (SAM). This coverage may be sub-limited to no less than $500,000. The limits may be included within the General Liability limit or provided by separate endorsement with its own limits. If you are unable to obtain SAM coverage under your General Liability because the insurance market will not support it, it should it be included with the Professional Liability.

Contractor must provide the following statement on their Certificate(s) of Insurance: "Sexual Abuse and Molestation coverage is included" or "Sexual Abuse and Molestation coverage is not excluded."

2. Business Automobile Liability

Bodily Injury and Property Damage for any owned, hired, and/or non-owned automobiles used in the performance of this Contract.

- Combined Single Limit (CSL) $1,000,000

Policy shall be endorsed, as required by this written agreement, to include the State of Arizona, and its departments, agencies, boards, commissions, universities, officers, officials, agents, and employees as additional insureds with respect to liability arising out of the activities performed by, or on behalf of, the Contractor involving automobiles owned, hired and/or non-owned by the Contractor.

Policy shall contain a waiver of subrogation endorsement as required by this written agreement in favor of the State of Arizona, and its departments, agencies, boards, commissions, universities, officers, officials, agents, and employees for losses arising from work performed by or on behalf of the Contractor.

3. Workers' Compensation and Employers' Liability

- Workers' Compensation Statutory
- Employers' Liability
  - o Each Accident $1,000,000
  - o Disease – Each Employee $1,000,000
  - o Disease – Policy Limit $1,000,000

Policy shall contain a waiver of subrogation endorsement, as required by this written agreement, in favor of the State of Arizona, and its departments, agencies, boards, commissions, universities, officers, officials, agents, and employees for losses arising from work performed by or on behalf of the Contractor.

This requirement shall not apply to each Contractor or subcontractor that is exempt under A.R.S. § 23-901, and when such Contractor or subcontractor executes the appropriate waiver form (Sole Proprietor or Independent Contractor).

4. Professional Liability (Errors and Omissions Liability) including Technology Errors & Omissions and Network Security (Cyber) and Privacy Liability

- Each Claim $2,000,000
- Annual Aggregate $6,000,000

In the event that the Professional Liability insurance required by this Contract is written on a claims-made basis, Contractor warrants that any retroactive date under the policy shall precede the effective date of this Contract and, either continuous coverage will be maintained, or an extended discovery period will be exercised, for a period of two (2) years beginning at the time work under this Contract is completed.

The policy shall cover Contractor's professional misconduct or negligent acts for those positions defined in the Scope of Work of this contract.

Such insurance shall cover any, and all errors, omissions, or negligent acts in the delivery of products, services, and/or licensed programs Contractor provides under this contract.

Coverage shall include copyright infringement, infringement of trade dress, domain name, title or slogan.

Such insurance shall include, but not be limited to, coverage for third party claims and losses with respect to network risks (such as data breaches, unauthorized access or use, ID theft, theft of data) and invasion of privacy regardless of the type of media involved in the loss of private information, crisis management and identity theft response costs. This should also include breach notification costs, credit monitoring, defense and claims expenses, regulatory defense

costs plus fines and penalties, cyber extortion, computer program and electronic data restoration expenses coverage (data asset protection), network business interruption,.

Commercial Crime –including employee dishonesty covering liability against direct and verifiable losses of money, securities, products, equipment, material and other property of the State caused by theft or forgery, computer fraud or fund transfers by identifiable employees of in the following limits:

- $2,000,000 each claim
- $5,000,000 annual aggregate

~~The policy shall be endorsed, as required by this written agreement, to include the State of Arizona, and its departments, agencies, boards, commissions, universities, officers, officials, agents, and employees as additional insureds with respect to vicarious liability of the insured arising out of the activities performed by or on behalf of the Contractor.~~

~~Policy shall contain a waiver of subrogation endorsement, as required by this written agreement, in favor of the State of Arizona, and its departments, agencies, boards, commissions, universities, officers, officials, agents, and employees for losses arising from work performed by or on behalf of the Contractor.~~)

4. Installation Floater

- Coverage amount is $___TBD At Award of Contract based on Value_____

Policy shall contain an Additional Insured endorsement, as required by this written agreement, in favor of the State of Arizona, and its departments, agencies, boards, commissions, universities, officers, officials, agents, and employees.

The State of Arizona and the Department shall be named as loss payee as its interest may appear.

Coverage shall be written on an all risk, replacement cost basis and shall include coverage for flood and earth movement as well as coverage for losses that may occur during equipment testing/commissioning.

Policy shall be maintained until whichever of the following shall first occur: (1) final payment has been made; or, (2) until no person or entity, other than the State of Arizona, has an insurable interest in the property required to be covered.

Policy shall be endorsed such that the insurance shall not be canceled or lapse because of any partial use or occupancy by the State of Arizona.

The Installation Floater must provide coverage from the time the equipment/material becomes the responsibility of the Contractor and shall continue without interruption during the installation, testing and commissioning, including any time during which the equipment/material is being transported to the installation site, or awaiting installation, whether on or off site.

Policy shall contain a Waiver of Subrogation endorsement, as required by written agreement, in favor of the State of Arizona, and its departments, agencies, boards, commissions, universities,

Comment [DAB1]: 9.16.19 After further consultation with its broker and underwriter, Motorola cannot agree to the inclusion of the Additional Insured endorsement within the Professional Liability Policy. It is however, included within the CGL policy.

officers, officials, agents, and employees for losses arising from work performed by the Contractor for the State of Arizona.

Contractor is responsible for the payment of all deductibles under the Installation Floater.

Additional Insurance Requirements

The policies shall include, or be endorsed to include, as required by this written agreement, the following provisions:

The Contractor's policies (excluding the Professional Liability policy) as applicable, shall stipulate that the insurance afforded the Contractor shall be primary and that any insurance carried by the Department, its agents, officials, employees or the State of Arizona shall be excess and not contributory insurance, as provided by A.R.S. § 41-621 (E).

Insurance provided by the Contractor shall not limit the Contractor's liability assumed under the indemnification provisions of this Contract.

Notice of Cancellation

Applicable to all insurance policies required within the Insurance Requirements of this Contract, Contractor's insurance shall not be permitted to expire, be suspended, be canceled, or be materially changed for any reason without thirty (30) days prior written notice to the State of Arizona. Within two (2) business days of receipt, Contractor, (not Contractor's insurance provider), must provide notice to the State of Arizona if they receive notice of a policy that has been or will be suspended, canceled, materially changed for any reason, has expired, or will be expiring. Such notice shall be sent directly to the Department and shall be mailed, emailed, hand delivered or sent by facsimile transmission to (State Representative's Name, Address & Fax Number).

Acceptability of Insurers

Contractor's insurance shall be placed with companies licensed in the State of Arizona or hold approved non-admitted status on the Arizona Department of Insurance List of Qualified Unauthorized Insurers. Insurers shall have an "A.M. Best" rating of not less than A- VII. The State of Arizona in no way warrants that the above-required minimum insurer rating is sufficient to protect the Contractor from potential insurer insolvency.

Verification of Coverage

Contractor shall furnish the State of Arizona with certificates of insurance (valid ACORD form or equivalent approved by the State of Arizona) evidencing that Contractor has the insurance as required by this Contract. An authorized representative of the insurer shall sign the certificates.

All such certificates of insurance and policy endorsements must be received by the State before work commences. The State's receipt of any certificates of insurance or policy endorsements that do not comply with this written agreement shall not waive or otherwise affect the requirements of this agreement.

Each insurance policy required by this Contract must be in effect at, or prior to, commencement of work under this Contract. Failure to maintain the insurance policies as required by this Contract, or to provide evidence of renewal, is a material breach of contract.

All certificates required by this Contract shall be sent directly to the Department. The State of Arizona project/contract number and project description shall be noted on the certificate of insurance. In the event of a claim from a third party naming the State of Arizona with allegations arising directly out of the products and/or services rendered by Motorola under this contract, the State of Arizona reserves the right to request Motorola as Contractor to provide access to any and all policy(ies) required by the insurance requirements, including all endorsement(s), within 30 business days of such request. Contractor will be permitted to redact any references or endorsements to other customer (non-State of Arizona) information before providing access to the policies.

Subcontractors

Contractor shall be responsible for ensuring and/or verifying that all subcontractors have valid

and collectable insurance as evidenced by the certificates of insurance and endorsements for each subcontractor. All coverages for subcontractors shall be subject to the minimum Insurance Requirements identified above. The Department reserves the right to require, at any time

throughout the life of this contract, proof from the Contractor that its subcontractors have the required coverage.

Approval and Modifications

Upon 60 days' notice to Contractor, tThe Contracting Agency, in consultation with State Risk, reserves the right to review or make modifications to the insurance limits, required coverages, or endorsements throughout the life of this contract, as deemed necessary. Such action will not require a formal Contract amendment but may be made by administrative action, but will be subject to commercially available terms and conditions on the marketplace.]

Exceptions

In the event the Contractor or subcontractor(s) is/are a public entity, then the Insurance Requirements shall not apply. Such public entity shall provide a certificate of self-insurance. If the Contractor or subcontractor(s) is/are a State of Arizona agency, board, commission, or university, none of the above shall apply.

Comment [K2]: The State would need to make 60 day's notice to Motorola of any change in the insurance requirements and be subject to commercially available terms and conditions in the marketplace and not result in increased premium charges to Motorola. Otherwise, this paragraph is unacceptable. **8.28.19 Procurement will check with Risk Mgmt, but agreed 60 days was reasonable. 9/9/19 State can agree with exception of 'result in increased premium to Motorola' which such event might occur due to legislative changes.. if high/ significant premium increase then State may agree to a price increase.**
9/12/19 Motorola risk and finance agreed with exclusion of 'increased premium charges to Motorola' and includes the 60 days' notice and available marketplace conditions in this revision.
9.13.19 State will double check with risk mgmt; tentatively accept, State to confirm.

Motorola Solutions, Inc.

Change Log to State of Arizona – Additional Provisions-Supplemental Terms – ADSPO19-00008376

The following are changes that Motorola Solutions, Inc. is submitting to our original proposal submitted on September 4, 2018.

Attachment A

For purposes of showing precedence and the parties' past course of doing business, Solicitations # ADSPO13-036880 and ADSPO13-036613, which are the current contracts between the Parties for similar products, contain Additional Provisions for limitation of liability, warranty and the inclusion of Motorola's Software License Agreement. With this in mind, Motorola proposes for the State's consideration the inclusion of the following items:

Section 1:

1.1 EQUIPMENT WARRANTY. During the Warranty Period established in the State of Arizona contract resulting from ADSPO19-00008376, Motorola warrants that the Equipment under normal use and service will be free from material defects in materials and workmanship. If System Acceptance is delayed beyond six (6) months after shipment of the Equipment by events or causes within Customer's control, this warranty expires eighteen (18) months after the shipment of the Equipment.

1.2. MOTOROLA SOFTWARE WARRANTY. Unless otherwise stated in the Software License Agreement, during the Warranty Period, Motorola warrants the Motorola Software in accordance with the terms of the Software License Agreement and the provisions of this Section 1 that are applicable to the Motorola Software. If System Acceptance is delayed beyond six (6) months after shipment of the Motorola Software by events or causes within Customer's control, this warranty expires eighteen (18) months after the shipment of the Motorola Software.

1.3. EXCLUSIONS TO EQUIPMENT AND MOTOROLA SOFTWARE WARRANTIES. These warranties do not apply to: (i) defects or damage resulting from: use of the Equipment or Motorola Software in other than its normal, customary, and authorized manner; accident, liquids, neglect, or acts of God; testing, maintenance, disassembly, repair, installation, alteration, modification, or adjustment not provided or authorized in writing by Motorola; Customer's failure to comply with all applicable industry and OSHA standards; (ii) breakage of or damage to antennas unless caused directly by defects in material or workmanship; (iii) Equipment that has had the serial number removed or made illegible; (iv) batteries (because they carry their own separate limited warranty) or consumables; (v) freight costs to ship Equipment to the repair depot; (vi) scratches or other cosmetic damage to Equipment surfaces that does not affect the operation of the Equipment; and (vii) normal or customary wear and tear.

1.4. WARRANTY CLAIMS. To assert a warranty claim, Customer must notify Motorola in writing of the claim before the expiration of the Warranty Period. Upon receipt of this notice, Motorola will investigate the warranty claim. If this investigation confirms a valid warranty claim, Motorola will (at its option and at no additional charge to Customer) repair the defective Equipment or Motorola Software, replace it with the same or equivalent product, or refund the price of the defective Equipment or Motorola Software. That action will be the full extent of Motorola's liability for the warranty claim. If this investigation indicates the warranty claim is not valid, then Motorola may invoice Customer for responding to the claim on a time and materials basis using Motorola's then current labor rates. Repaired or replaced product is warranted for

the balance of the original applicable warranty period. All replaced products or parts will become the property of Motorola.

1.5. ORIGINAL END USER IS COVERED. These express limited warranties are extended by Motorola to the original user purchasing the System for commercial, industrial, or governmental use only, and are not assignable or transferable.

1.6. DISCLAIMER OF OTHER WARRANTIES. THESE WARRANTIES ARE THE COMPLETE WARRANTIES FOR THE EQUIPMENT AND MOTOROLA SOFTWARE PROVIDED UNDER THIS AGREEMENT AND ARE GIVEN IN LIEU OF ALL OTHER WARRANTIES. MOTOROLA DISCLAIMS ALL OTHER WARRANTIES OR CONDITIONS, EXPRESS OR IMPLIED, INCLUDING THE IMPLIED WARRANTIES OF MERCHANTABILITY AND FITNESS FOR A PARTICULAR PURPOSE.

"Warranty Period" means ~~one (1) year from the date of System Acceptance or Beneficial Use, whichever occurs first.~~the applicable category warranty period defined in the State of Arizona ADSPO19-00008376.

Section 2 LIMITATION OF LIABILITY

This limitation of liability provision shall apply notwithstanding any contrary provision in this Agreement and to the extent permitted by State of Arizona law. Except for personal injury or death, Motorola's total liability, whether for breach of contract, warranty, negligence, strict liability in tort, indemnification, or otherwise, will be limited to the direct damages recoverable under law, but not to exceed the price of the Equipment, Software, or services with respect to which losses or damages are claimed. ALTHOUGH THE PARTIES ACKNOWLEDGE THE POSSIBILITY OF SUCH LOSSES OR DAMAGES, THEY AGREE THAT MOTOROLA WILL NOT BE LIABLE FOR ANY COMMERCIAL LOSS; INCONVENIENCE; LOSS OF USE, TIME, DATA, GOOD WILL, REVENUES, PROFITS OR SAVINGS; OR OTHER SPECIAL, INCIDENTAL, INDIRECT, OR CONSEQUENTIAL DAMAGES IN ANY WAY RELATED TO OR ARISING FROM THIS AGREEMENT, THE SALE OR USE OF THE EQUIPMENT OR SOFTWARE, OR THE PERFORMANCE OF SERVICES BY MOTOROLA PURSUANT TO THIS AGREEMENT. This limitation of liability will survive the expiration or termination of this Agreement.

Section 3 Intentionally Deleted. ~~PATENT AND COPYRIGHT INFRINGEMENT.~~

~~Motorola will defend at its expense any suit brought against Customer to the extent it is based on a third-party claim alleging that the Equipment manufactured by Motorola or the Motorola Software ("Motorola Product") directly infringes a United States patent or copyright ("Infringement Claim"). Motorola's duties to defend and indemnify are conditioned upon: Customer promptly notifying Motorola in writing of the Infringement Claim; Motorola having sole control of the defense of the suit and all negotiations for its settlement or compromise; and Customer providing to Motorola cooperation and, if requested by Motorola, reasonable assistance in the defense of the Infringement Claim. In addition to Motorola's obligation to defend, and subject to the same conditions, Motorola will pay all damages finally awarded against Customer by a court of competent jurisdiction for an Infringement Claim or agreed to, in writing, by Motorola in settlement of an Infringement Claim.~~

~~If an Infringement Claim occurs, or in Motorola's opinion is likely to occur, Motorola may at its option and expense: (a) procure for Customer the right to continue using the Motorola Product; (b) replace or modify the Motorola Product so that it becomes non-infringing while providing functionally equivalent performance; or (c) accept the return of the Motorola Product and grant Customer a credit for the Motorola Product, less a reasonable charge for depreciation. The depreciation amount will be calculated based upon generally accepted accounting standards.~~

~~Motorola will have no duty to defend or indemnify for any Infringement Claim that is based upon: (a) the~~

~~combination of the Motorola Product with any software, apparatus or device not furnished by Motorola; (b) the use of ancillary equipment or software not furnished by Motorola and that is attached to or used in connection with the Motorola Product; (c) Motorola Product designed or manufactured in accordance with Customer's designs, specifications, guidelines or instructions, if the alleged infringement would not have occurred without such designs, specifications, guidelines or instructions; (d) a modification of the Motorola Product by a party other than Motorola; (e) use of the Motorola Product in a manner for which the Motorola Product was not designed or that is inconsistent with the terms of this Agreement; or (f) the failure by Customer to install an enhancement release to the Motorola Software that is intended to correct the claimed infringement. In no event will Motorola's liability resulting from its indemnity obligation to Customer extend in any way to royalties payable on a per use basis or the Customer's revenues, or any royalty basis other than a reasonable royalty based upon revenue derived by Motorola from Customer from sales or license of the infringing Motorola Product.~~

~~This Section provides Customer's sole and exclusive remedies and Motorola's entire liability in the event of an Infringement Claim. Customer has no right to recover and Motorola has no obligation to provide any other or further remedies, whether under another provision of this Agreement or any other legal theory or principle, in connection with an Infringement Claim. In addition, the rights and remedies provided in this Section are subject to and limited by the restrictions set forth in Motorola's Limitation of Liability.~~

Attachment B. SOFTWARE LICENCE AGREEMENT: For the purposes of showing precedence and the parties past course of doing business, in the Arizona Department of Transportation Solicitation # T11-43-00008 contract dated September 2, 2010, the State of Arizona's Attorney General agreed to an additional provision that provided for licensing of software in accordance with Motorola's Software License Agreement, which was contemplated in ADSPO13-036880. With this in mind, Motorola's Software License Agreement is attached and proposed for inclusion in this contract.

Attachment B

MOTOROLA SOFTWARE LICENSE AGREEMENT

This Exhibit A Motorola Software License Agreement ("Agreement") is between Motorola Solutions, Inc., ("Motorola"), and the purchaser of products containing Motorola software under the State of Arizona's Agreement from RFP ADSPO19-00008376 ("Licensee").

For good and valuable consideration, the parties agree as follows:

Section 1 DEFINITIONS

1.1 "Designated Products" means products provided by Motorola to Licensee with which or for which the Software and Documentation is licensed for use.

1.2 "Documentation" means product and software documentation that specifies technical and performance features and capabilities, and the user, operation and training manuals for the Software (including all physical or electronic media upon which such information is provided).

1.3 "Open Source Software" means software with either freely obtainable source code, license for modification, or permission for free distribution.

1.4 "Open Source Software License" means the terms or conditions under which the Open Source Software is licensed.

1.5 "Primary Agreement" means the agreement to which this exhibit is attached.

1.6 “Security Vulnerability” means a flaw or weakness in system security procedures, design, implementation, or internal controls that could be exercised (accidentally triggered or intentionally exploited) and result in a security breach such that data is compromised, manipulated or stolen or the system damaged.

1.7 “Software” (i) means proprietary software in object code format, and adaptations, translations, de-compilations, disassemblies, emulations, or derivative works of such software; (ii) means any modifications, enhancements, new versions and new releases of the software provided by Motorola; and (iii) may contain one or more items of software owned by a third party supplier. The term "Software" does not include any third party software provided under separate license or third party software not licensable under the terms of this Agreement.

Section 2 SCOPE

Motorola and Licensee enter into this Agreement in connection with Motorola's delivery of certain proprietary software or products containing embedded or pre-loaded proprietary software, or both. This Agreement contains the terms and conditions of the license Motorola is providing to Licensee, and Licensee’s use of the proprietary software and affiliated documentation.

Section 3 GRANT OF LICENSE

3.1. Subject to the provisions of this Agreement and the payment of applicable license fees, Motorola grants to Licensee a personal, limited, non-transferable (except as permitted in Section 7) and non-exclusive license under Motorola’s copyrights and Confidential Information (as defined in the Primary Agreement) embodied in the Software to use the Software, in object code form, and the Documentation solely in connection with Licensee's use of the Designated Products. This Agreement does not grant any rights to source code.

3.2. If the Software licensed under this Agreement contains or is derived from Open Source Software, the terms and conditions governing the use of such Open Source Software are in the Open Source Software Licenses of the copyright owner and not this Agreement. If there is a conflict between the terms and conditions of this Agreement and the terms and conditions of the Open Source Software Licenses governing Licensee’s use of the Open Source Software, the terms and conditions of the license grant of the applicable Open Source Software Licenses will take precedence over the license grants in this Agreement. If requested by Licensee, Motorola will use commercially reasonable efforts to: (i) determine whether any Open Source Software is provided under this Agreement; and (ii) identify the Open Source Software (or specify where that license may be found).

3.3. TO THE EXTENT, IF ANY, THAT THERE IS A SEPARATE LICENSE AGREEMENT PACKAGED WITH, OR PROVIDED ELECTRONICALLY WITH, A PARTICULAR PRODUCT THAT BECOMES EFFECTIVE ON AN ACT OF ACCEPTANCE BY THE END USER, THEN THAT AGREEMENT SUPERCEDES THIS SOFTWARE LICENSE AGREEMENT AS TO THE END USER OF EACH SUCH PRODUCT.

Section 4 LIMITATIONS ON USE

4.1. Licensee may use the Software only for Licensee's internal business purposes and only in accordance with the Documentation. Any other use of the Software is strictly prohibited. Without limiting the general nature of these restrictions, Licensee will not make the Software available for use by third parties on a "time sharing," "application service provider," or "service bureau" basis or for any other similar commercial rental or sharing arrangement.

4.2. Licensee will not, and will not allow or enable any third party to: (i) reverse engineer, disassemble, peel components, decompile, reprogram or otherwise reduce the Software or any portion to a human perceptible form or otherwise attempt to recreate the source code; (ii) modify, adapt, create

derivative works of, or merge the Software; (iii) copy, reproduce, distribute, lend, or lease the Software or Documentation to any third party, grant any sublicense or other rights in the Software or Documentation to any third party, or take any action that would cause the Software or Documentation to be placed in the public domain; (iv) remove, or in any way alter or obscure, any copyright notice or other notice of Motorola's proprietary rights; (v) provide, copy, transmit, disclose, divulge or make the Software or Documentation available to, or permit the use of the Software by any third party or on any machine except as expressly authorized by this Agreement; or (vi) use, or permit the use of, the Software in a manner that would result in the production of a copy of the Software solely by activating a machine containing the Software. Licensee may make one copy of Software to be used solely for archival, back-up, or disaster recovery purposes; *provided* that Licensee may not operate that copy of the Software at the same time as the original Software is being operated. Licensee may make as many copies of the Documentation as it may reasonably require for the internal use of the Software.

4.3. Unless otherwise authorized by Motorola in writing, Licensee will not, and will not enable or allow any third party to: (i) install a licensed copy of the Software on more than one unit of a Designated Product; or (ii) copy onto or transfer Software installed in one unit of a Designated Product onto one other device. Licensee may temporarily transfer Software installed on a Designated Product to another device if the Designated Product is inoperable or malfunctioning, if Licensee provides written notice to Motorola of the temporary transfer and identifies the device on which the Software is transferred. Temporary transfer of the Software to another device must be discontinued when the original Designated Product is returned to operation and the Software must be removed from the other device. Licensee must provide prompt written notice to Motorola at the time temporary transfer is discontinued.

4.4 Licensee will maintain, during the term of this Agreement and for a period of two years thereafter, accurate records relating to this license grant to verify compliance with this Agreement. Motorola or an independent third party ("Auditor") may inspect Licensee's premises, books and records, upon reasonable prior notice to Licensee, during Licensee's normal business hours and subject to Licensee's facility and security regulations. Motorola is responsible for the payment of all expenses and costs of the Auditor. Any information obtained by Motorola and the Auditor will be kept in strict confidence by Motorola and the Auditor and used solely for the purpose of verifying Licensee's compliance with the terms of this Agreement.

Section 5 OWNERSHIP AND TITLE

Motorola, its licensors, and its suppliers retain all of their proprietary rights in any form in and to the Software and Documentation, including, but not limited to, all rights in patents, patent applications, inventions, copyrights, trademarks, trade secrets, trade names, and other proprietary rights in or relating to the Software and Documentation (including any corrections, bug fixes, enhancements, updates, modifications, adaptations, translations, de-compilations, disassemblies, emulations to or derivative works from the Software or Documentation, whether made by Motorola or another party, or any improvements that result from Motorola's processes or, provision of information services). No rights are granted to Licensee under this Agreement by implication, estoppel or otherwise, except for those rights which are expressly granted to Licensee in this Agreement. All intellectual property developed, originated, or prepared by Motorola in connection with providing the Software, Designated Products, Documentation or related services, remains vested exclusively in Motorola, and Licensee will not have any shared development or other intellectual property rights.

Section 6 LIMITED WARRANTY; DISCLAIMER OF WARRANTY

6.1. Unless otherwise stated in the Primary Agreement, the commencement date and the term of the Software warranty will be a period of ninety (90) days from Motorola's shipment of the Software (the "Warranty Period"). If Licensee is not in breach of any of its obligations under this Agreement, Motorola warrants that the unmodified Software, when used properly and in accordance with the Documentation and this Agreement, will be free from a reproducible defect that eliminates the functionality or successful operation of a feature critical to the primary functionality or successful operation of the Software. Whether a defect occurs will be determined by Motorola solely with reference to the Documentation. Motorola

does not warrant that Licensee's use of the Software or the Designated Products will be uninterrupted, error-free, completely free of Security Vulnerabilities, or that the Software or the Designated Products will meet Licensee's particular requirements. Motorola makes no representations or warranties with respect to any third party software included in the Software. Notwithstanding, any warranty provided by a copyright owner in its standard license terms will flow through to Licensee for third party software provided by Motorola.

6.2 Motorola's sole obligation to Licensee and Licensee's exclusive remedy under this warranty is to use reasonable efforts to remedy any material Software defect covered by this warranty. These efforts will involve either replacing the media or attempting to correct significant, demonstrable program or documentation errors or Security Vulnerabilities. If Motorola cannot correct the defect within a reasonable time, then at Motorola's option, Motorola will replace the defective Software with functionally-equivalent Software, license to Licensee substitute Software which will accomplish the same objective, or terminate the license and refund the Licensee's paid license fee.

6.3. Warranty claims are described in the Primary Agreement.

6.4. The express warranties set forth in this Section 6 are in lieu of, and Motorola disclaims, any and all other warranties (express or implied, oral or written) with respect to the Software or Documentation, including, without limitation, any and all implied warranties of condition, title, non-infringement, merchantability, or fitness for a particular purpose or use by Licensee (whether or not Motorola knows, has reason to know, has been advised, or is otherwise aware of any such purpose or use), whether arising by law, by reason of custom or usage of trade, or by course of dealing. In addition, Motorola disclaims any warranty to any person other than Licensee with respect to the Software or Documentation.

Section 7 TRANSFERS

Licensee will not transfer the Software or Documentation to any third party without Motorola's prior written consent. Motorola's consent may be withheld at its discretion and may be conditioned upon transferee paying all applicable license fees and agreeing to be bound by this Agreement. If the Designated Products are Motorola's radio products and Licensee transfers ownership of the Motorola radio products to a third party, Licensee may assign its right to use the Software (other than CPS and Motorola's FLASHport® software) which is embedded in or furnished for use with the radio products and the related Documentation; *provided* that Licensee transfers all copies of the Software and Documentation to the transferee, and Licensee and the transferee sign a transfer form to be provided by Motorola upon request, obligating the transferee to be bound by this Agreement.

Section 8 TERM AND TERMINATION

8.1 Licensee's right to use the Software and Documentation will begin when the Primary Agreement is signed by both parties and will continue for the life of the Designated Products with which or for which the Software and Documentation have been provided by Motorola, unless Licensee breaches this Agreement, in which case this Agreement and Licensee's right to use the Software and Documentation may be terminated immediately upon notice by Motorola.

8.2 Within thirty (30) days after termination of this Agreement, Licensee must certify in writing to Motorola that all copies of the Software have been removed or deleted from the Designated Products and that all copies of the Software and Documentation have been returned to Motorola or destroyed by Licensee and are no longer in use by Licensee.

8.3 Licensee acknowledges that Motorola made a considerable investment of resources in the development, marketing, and distribution of the Software and Documentation and that Licensee's breach of this Agreement will result in irreparable harm to Motorola for which monetary damages would be inadequate. If Licensee breaches this Agreement, Motorola may terminate this Agreement and be entitled to all available remedies at law or in equity (including immediate injunctive relief and repossession of all non-embedded Software and associated Documentation unless Licensee is a Federal agency of the

United States Government).

Section 9 Commercial Computer Software

9.1 *This Section 9 only applies to U.S. Government end users.* The Software, Documentation and updates are commercial items as that term is defined at 48 C.F.R. Part 2.101, consisting of "commercial computer software" and "computer software documentation" as such terms are defined in 48 C.F.R. Part 252.227-7014(a)(1) and 48 C.F.R. Part 252.227-7014(a)(5), and used in 48 C.F.R. Part 12.212 and 48 C.F.R. Part 227.7202, as applicable. Consistent with 48 C.F.R. Part 12.212, 48 C.F.R. Part 252.227-7015, 48 C.F.R. Part 227.7202-1 through 227.7202-4, 48 C.F.R. Part 52.227-19, and other relevant sections of the Code of Federal Regulations, as applicable, the Software, Documentation and Updates are distributed and licensed to U.S. Government end users: (i) only as commercial items, and (ii) with only those rights as are granted to all other end users pursuant to the terms and conditions contained herein.

9.2 If Licensee is licensing Software for end use by the United States Government or a United States Government agency, Licensee may transfer such Software license, but only if: (i) Licensee transfers all copies of such Software and Documentation to such United States Government entity or interim transferee, and (ii) Licensee has first obtained from the transferee (if applicable) and ultimate end user an enforceable end user license agreement containing restrictions substantially identical to the ones contained in this Agreement. Except as stated in the foregoing, Licensee and any transferee(s) authorized by this subsection 9.2 may not otherwise use or transfer or make available any Motorola software to any third party nor permit any party to do so.

Section 10 CONFIDENTIALITY

Licensee acknowledges that the Software and Documentation contain Motorola's valuable proprietary and Confidential Information and are Motorola's trade secrets, and that the provisions in the Primary Agreement concerning Confidential Information apply.

Section 11 LIMITATION OF LIABILITY

The Limitation of Liability provision is described in the Primary Agreement.

Section 12 NOTICES

Notices are described in the Primary Agreement.

Section 13 GENERAL

13.1. COPYRIGHT NOTICES. The existence of a copyright notice on the Software will not be construed as an admission or presumption of publication of the Software or public disclosure of any trade secrets associated with the Software.

13.2. COMPLIANCE WITH LAWS. Licensee acknowledges that the Software is subject to the laws and regulations of the United States and Licensee will comply with all applicable laws and regulations, including export laws and regulations of the United States. Licensee will not, without the prior authorization of Motorola and the appropriate governmental authority of the United States, in any form export or re-export, sell or resell, ship or reship, or divert, through direct or indirect means, any item or technical data or direct or indirect products sold or otherwise furnished to any person within any territory for which the United States Government or any of its agencies at the time of the action, requires an export license or other governmental approval. Violation of this provision is a material breach of this Agreement.

13.3. ASSIGNMENTS AND SUBCONTRACTING. Motorola may assign its rights or subcontract its obligations under this Agreement, or encumber or sell its rights in any Software, without prior notice to or consent of Licensee.

13.4. GOVERNING LAW. This Agreement is governed by the laws of the United States to the extent that they apply and otherwise by the internal substantive laws of the State to which the Software is shipped if Licensee is a sovereign government entity, or the internal substantive laws of the State of Illinois if Licensee is not a sovereign government entity. The terms of the U.N. Convention on Contracts for the International Sale of Goods do not apply. In the event that the Uniform Computer Information Transaction Act, any version of this Act, or a substantially similar law (collectively "UCITA") becomes applicable to a party's performance under this Agreement, UCITA does not govern any aspect of this Agreement or any license granted under this Agreement, or any of the parties' rights or obligations under this Agreement. The governing law will be that in effect prior to the applicability of UCITA.

13.5. THIRD PARTY BENEFICIARIES. This Agreement is entered into solely for the benefit of Motorola and Licensee. No third party has the right to make any claim or assert any right under this Agreement, and no third party is deemed a beneficiary of this Agreement. Notwithstanding the foregoing, any licensor or supplier of third party software included in the Software will be a direct and intended third party beneficiary of this Agreement.

13.6. SURVIVAL. Sections 4, 5, 6.4, 7, 8, 9, 10, 11 and 13 survive the termination of this Agreement.

13.7. ORDER OF PRECEDENCE. In the event of inconsistencies between this Exhibit and the Primary Agreement, the parties agree that this Exhibit prevails, only with respect to the specific subject matter of this Exhibit, and not the Primary Agreement or any other exhibit as it applies to any other subject matter.

13.8 SECURITY. Motorola uses reasonable means in the design and writing of its own Software and the acquisition of third party Software to limit Security Vulnerabilities. While no software can be guaranteed to be free from Security Vulnerabilities, if a Security Vulnerability is discovered, Motorola will take the steps set forth in Section 6 of this Agreement.

2. Product Catalog

Included in our response, we have set up a temporary site and password for the State of Arizona to use in the evaluation portion of this RFP. After evaluation, Motorola Solutions, Inc. can provide access to download our latest catalog via the ProcureAZ website or a similar mutually approved means, so users can easily access the latest updated catalog via secure login and password.

PCAT Temporary URL: https://www.motorolasolutions.com/en_us/product-catalog-search/access-product-catalog-offline.html

PCAT Temporary Login: pcatariz@mailinator.com

PCAT Temporary Password: Motorola$123

Login Screen

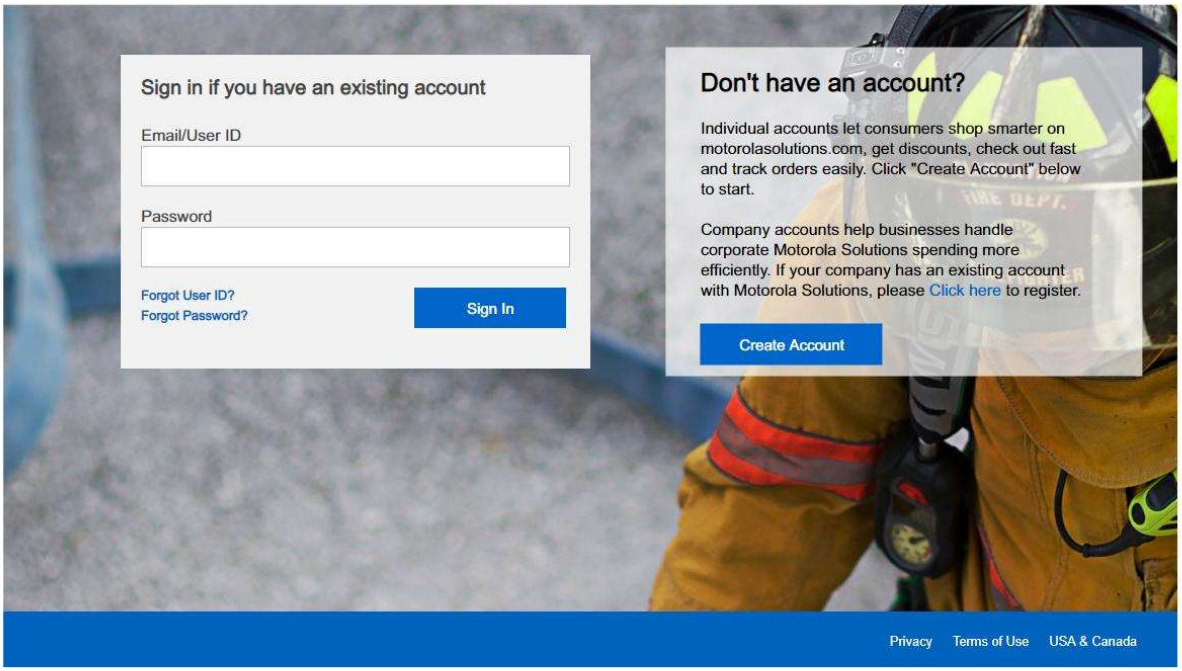

MOTOROLA, MOTO, MOTOROLA SOLUTIONS and the Stylized M Logo are trademarks or registered trademarks of Motorola Trademark Holdings, LLC and are used under license.
All other trademarks are the property of their respective owners.© 2018 Motorola Solutions, Inc. All rights reserved.

Catalog Download Screen



Extract Zip Folder

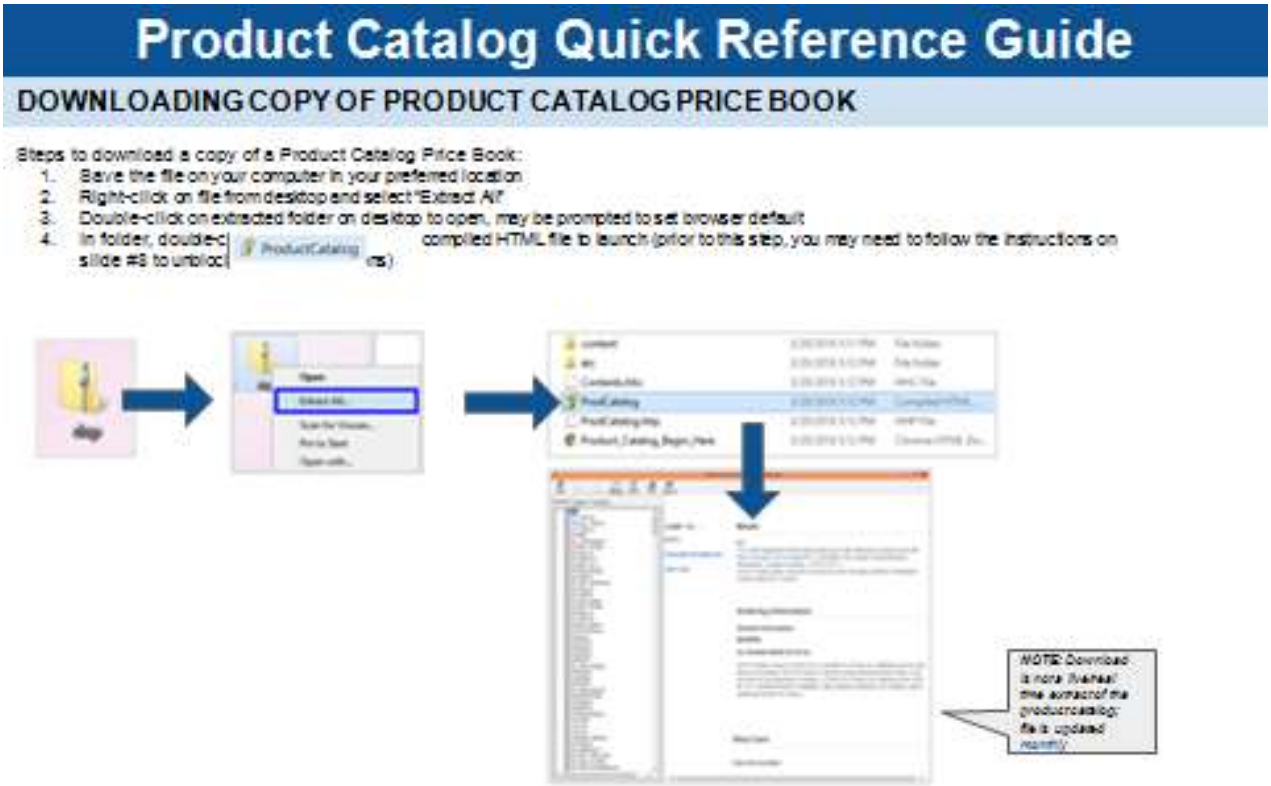

Unblock Properties

Product Catalog Quick Reference Guide

DOWNLOADING COPY OF PRODUCT CATALOG PRICE BOOK TROUBLESHOOTING

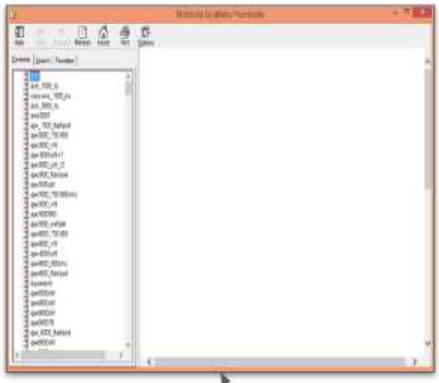

Issue: The right pane of the catalog download file is blank no matter which product you select.

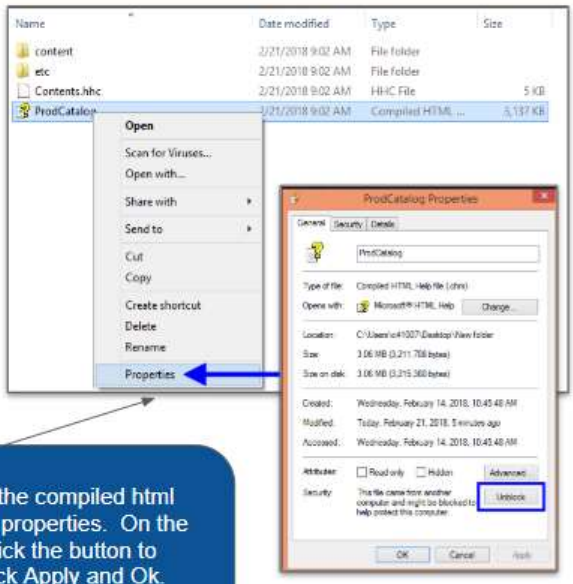

Right click on the compiled html file and select properties. On the General tab click the button to "unblock". Click Apply and Ok. You should now be able to see content when accessing the product catalog.

Catalog Sample

Our catalog can be searched and contains resources such as list price, warranty, service, accessories, specification sheets, brochures, catalogs, user's guides, etc.

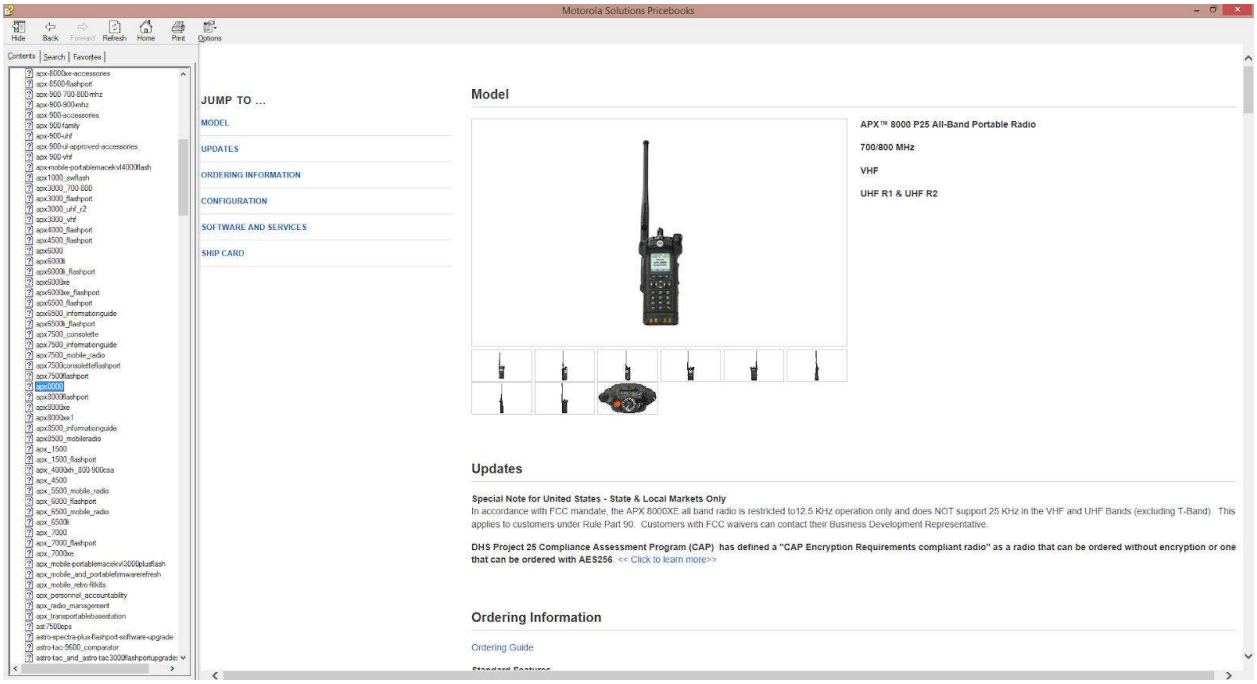

3. Sales and Ordering Support

Our communications products and services can be very complex. So, we encourage our customers to contact their local Motorola representative and ask for a comprehensive quotation before ordering any equipment. They have the training and experience to know each item and the necessary options, accessories, and software licenses to insure our equipment is ordered correctly.

Our representatives will quote each customer by using a tool we call Configure Price Quote (CPQ). This tool is linked to our database and contains all State of Arizona discounts, so we can insure each item is priced correctly. Additionally, it lists the State of Arizona Contract as a reference in the proposal heading; along with other necessary information such as bill to, ship to addresses, contacts, applicable sales tax, etc.

If an agency does not know their Motorola Representative, please contact Walter Whately at 520-457-8604 or walter.whately@motorolasolutions.com and he will connect them with the appropriate representative.

Motorola's Software is licensed pursuant to Motorola's Software License Agreement, a copy of can be provided upon request.

End of Attachment 4

Attachment 4

Pricing Sheet

Attachment 4 Pricing Sheet - Offeror shall submit pricing information using the Excel document ADSPO19-00008376 Attachment 4 - Pricing_Public_Communications_Equipment_and_Services provided within ProcureAZ.

Item(s) in ProcureAZ - Offeror shall enter a one (1) in the unit cost field of line item 1 within ProcureAZ. NOTE: Offeror that shows a zero or leaving this field blank will result in a **No Bid**.

Please note that in order for Offeror to be susceptible, there must be a $1.00 response under Unit Cost on the Items Tab in ProcureAZ.

ADSPO19-00008376 Public Communications Equipment and Services – Attachment 4

1. Pricing

The pricing for each section is listed below in under each product category. Please refer to the catalog section 2.0.0 for specific details on each product including installation, services, engineering and warranties. Motorola Solutions, Inc. has included a list of exceptions in Attachment 5-B Supplement No. 1., to allow the State of Arizona to review and insure that our products will suit the state and other cooperative procurement agencies. Motorola Solutions regularly develops new products and solutions. We will work with the State of Arizona to add new products as they are available at agreed upon prices. Additions of new products and solutions will be memorialized in a written amendment.

#	Category	Percentage of catalog price
1.1.0	**Product Category**	
1.2.0	**2-Way Radio (Quantity Discount for Single Orders Only)**	
	APX Radios-Quantity Discounts (1-499)	**27%**
	Quantity Discount (500-1999)	**30%**
	Quantity Discount (2000-6999)	**35%**
	Quantity Discount (7000 & above)	**40%**
	APX Portable Radios, Mobile Radios, APX accessories, FLASH Upgrade licenses, batteries, chargers and remote speaker microphones-	**27%**

#	Category	Percentage of catalog price
	2-Way Radio Repeaters	**20%**
	ASTRO Radio systems hardware, software, features and licenses	**15%**
	All 2-Way Radio and accessory software including: Customer Programming Software, Radio and Device Manager, LEX and VML LTE devices and accessories	**5%**
	Service Monitors and related accessories and licenses	**5%**
1.3.0	**Digital Microwave Terminals**	
	All Digital Microwave Systems hardware, software and licenses	**15%**
1.4.0	**LMR Base Station Antennas, Microwave Antennas**	
	All infrastructure antennas including LMR and Microwave	**20%**
	All transmission line, connectors and related hardware	**10%**
1.5.0	**RADIO DISPATCH CONSOLES**	
	All Radio Dispatch Consoles software and licenses	**20%**
	All Radio Dispatch and Command Center Computer Hardware	**15%**
	All Radio Dispatch Console furniture, FSA, Logging Solutions, hardware, software, and licenses	**10%**
	All Radio Dispatch accessories including headsets footswitches, etc.	**27%**
1.6.0	**GENERATORS**	
	[redacted]	[redacted]
1.7.0	**Back-up Batteries**	
	All Back-up Batteries	**5%**
	All portable radio batteries	**27%**
1.8.0	**Prefab Comm Shelters**	
	All Prefab Communications Shelters and related hardware	**5%**
1.9.0	**Service**	
	All Services including: Installation, Dispatch, Monitoring , Preventative Maintenance, Engineering, Telephone and On-Site Support	**2%**
	All Service Packages including: Essential, Advanced, Premier	**2%** off catalog pricing (minimum 2 year agreement)
1.10	**Consultation and Third-Party Oversight**	**No Bid**

EXHIBIT B
TO
COOPERATIVE CONTRACT PURCHASE ADDENDUM
CONTRACT NO. 2025250

[Proposal]

See following pages.

MOTOROLA SOLUTIONS

CITY OF BUCKEYE, AZ

TARTESSO SIMULCAST J SUBSITE **OCTOBER 25, 2024**

The design, technical, pricing, and other information (“Information”) furnished with this submission is proprietary and/or trade secret information of Motorola Solutions, Inc. (“Motorola Solutions”) and is submitted with the restriction that it is to be used for evaluation purposes only. To the fullest extent allowed by applicable law, the Information is not to be disclosed publicly or in any manner to anyone other than those required to evaluate the Information without the express written permission of Motorola Solutions.

MOTOROLA, MOTO, MOTOROLA SOLUTIONS, and the Stylized M Logo are trademarks or registered trademarks of Motorola Trademark Holdings, LLC and are used under license. All other trademarks are the property of their respective owners. © 2024 Motorola Solutions, Inc. All rights reserved.

Motorola Solutions, Inc.
3332 E. Broadway Rd.
Tempe, AZ 85040

Telephone: +1 480 267 8952

November 8, 2024

James Zwerg,
City of Buckeye

Subject: Tartesso Simulcast J Subsite

Mr. Zwerg,

Motorola Solutions is pleased to provide City of Buckeye, a proposal to add an ASTRO nine channel remote IP simulcast site to the RWC (Regional Wireless Cooperative) Simulcast J cell. Simulcast J serves the southwest valley including the cities of Buckeye and Goodyear. Simulcast J today is a nine-channel simulcast cell with six remote sub-sites connected into Zone 5 of the RWC. The name of the sub-site will be "Tartesso Buckeye Tower" or TART.

This proposal is subject to the terms and conditions of the State of Arizona Contract #CTR046830, its Exhibits and applicable Addenda ("Contract"). This proposal shall remain valid and expire on December 23th 2024. The City of Buckeye may accept this proposal by issuing a signed purchase order to Motorola containing the following language: "*This purchase is subject to the terms and conditions of State of Arizona Contract No. CTR046830 and the Motorola's proposal ("Proposal") dated Nov 8, 2024*".

Please address any questions to your Account Executive, Jared Zygowicz at (480) 604-5122 or jared.zygowicz@motorolasolutions.com.

We thank you for the opportunity to provide The City of Buckeye a new Tartesso Simulcast J Subsite.

Sincerely,
MOTOROLA SOLUTIONS, INC.

J. J. Trivedi

Jimmy Trivedi
Territory Vice President

TABLE OF CONTENTS

Section 1

System Description 1-1

1.1 Introduction 1-1

1.2 Simulcast J System Overview 1-1

1.2.1 Simulcast J Subsystem 1-2

1.3 Major Equipment 1-3

1.4 RF Design and Coverage Modeling 1-3

1.5 Design Assumptions 1-7

1.6 Rack Diagram & Indoor Connections 1-8

Section 2

Equipment List 2-1

2.1 Proposal Equipment List 2-1

Section 3

Statement of Work 3-1

3.1 Task Overview 3-1

3.2 Civil Work 3-4

3.3 Change Order Process 3-4

Section 4

Project Schedule 4-1

Section 5

Acceptance Test Plan 5-1

Section 6

Warranty and Support 6-1

6.1 Technical Support Service 6-1

6.2 Dispatch Service 6-1

6.3 On-Site Infrastructure Response 6-1

6.4 Infrastructure Repair 6-2

6.5 Network Preventative Maintenance 6-2

Section 7

Pricing Summary 7-1

Section 8

Terms and Conditions 8-1

SECTION 1

SYSTEM DESCRIPTION

1.1 INTRODUCTION

Motorola Solutions is pleased to provide City of Buckeye, a proposal to add an ASTRO nine channel remote IP simulcast site to the RWC (Regional Wireless Cooperative). Simulcast J today is a nine-channel simulcast cell with six remote sub-sites connected into Zone 5 of the RWC. The name of the sub-site will be “Tartesso Buckeye Tower” or TART.

The Tartesso sub-site will connect via Customer provided redundant paths to the Simulcast J Prime Site located at the Buckeye American Tower (ATWR) site.

The Buckeye Tartesso site will be composed of nine 700Mhz channels with four channels capable of TDMA and Dynamic Channel operation, and four channels capable of Dynamic Dual Mode operation. Customer provided antenna equipment will be complemented by Motorola provided tower top amplifiers and CMUs. Fault management devices are also included.

Site development services have not been included. The City of Buckeye is responsible for providing a tower to support the proposed antenna system along with an equipment shelter with diesel generator and a DC power plant to house and support the proposed equipment.

1.2 SIMULCAST J SYSTEM OVERVIEW

The existing Simulcast J system consists of a single simulcast cell with six sub-sites. The figure below shows the current configuration with the proposed Tartesso expansion site.

Motorola Solutions Confidential Restricted

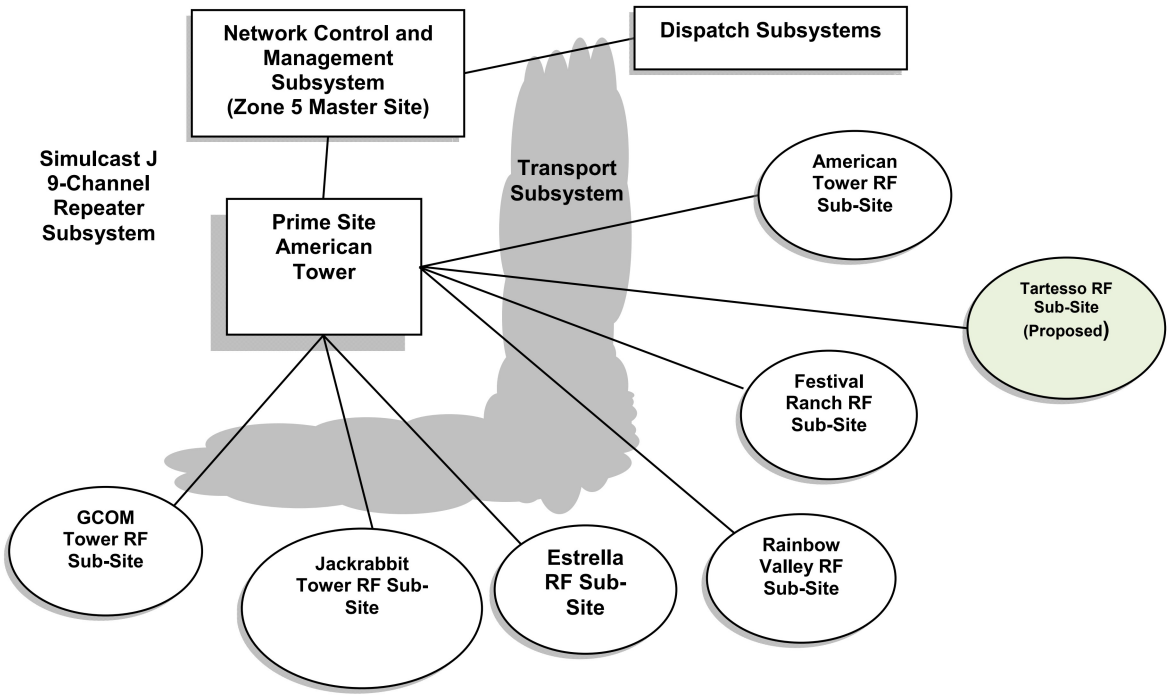

The addition of the Tartesso site will increase the number of total sub-sites to seven. The Tartesso sub-site, with contributions from the other Simulcast J remote sites, is predicted to provide inbound and outbound portable coverage as depicted in Motorola Solutions' coverage maps. These maps predict coverage at 95% coverage reliability (as per TSB-88 definition) within a medium density building (12dB of additional loss).

1.2.1 Simulcast J Subsystem

The Tartesso site will be added to the current radio subsystem that consists of one ASTRO 25 simulcast cell with six remote transmitter sub-sites with nine base repeaters per site.

Current Simulcast J sites consist of:

- American Tower (RF and Prime)
- Estrella
- Rainbow Valley
- Festival Ranch
- Goodyear
- Jackrabbit

The equipment for the proposed the site mirrors the equipment provided at the other Simulcast J sub-sites and includes:

1.3 MAJOR EQUIPMENT

Motorola has included the following Major Components in the proposed solution:

Software licenses:

- Master site licenses for one additional RF site
- TDMA Site license for the new site
- Dynamic Talkgroup license for the new site
- Two (2) simulcast remote site licenses (one for primary site controller and another for redundant site controller).
- TDMA licensing for four (4) channels.
- Dynamic channel licensing for four (4) channels.

Equipment:

- One (1) Primary GTR ESS in cabinet with:
  - Five (5) GTR stations
  - Two (2) GGM Routers
  - 700 MHz RF Distribution System: Combiner, Site and Cabinet Receive Multicoupler
  - Two (2) DSC Reference Distribution Module
  - One (1) Tx 700MHz Filter
- One (1) Expansion GTR ESS in cabinet with:
  - Four (4) GTR stations
  - 700 MHz RF Distribution System: Combiner and Cabinet Receive Multicoupler
  - Two (2) High Availability X-Hubs
  - One (1) Tx Phasing Harness
- One SDM 3000 remote terminal unit*
- Two (2) Tower Top Amplifiers (One for each RX antenna).
- Two (2) TTA Control and Monitor Unit.
- One (1) TRAK 9100 timing unit.

*Each of the Simulcast J sub-sites is equipped with site alarm monitoring. The Tartesso sub-site will also include site alarm monitoring. The RF sites have monitoring points for all transmitters and site control equipment. In addition, discrete contact closures may monitor environmental and site points, including microwave, backup power.

All antenna equipment up to the Motorola provided surge arrestors will be provided and installed by Buckeye.

1.4 RF DESIGN AND COVERAGE MODELING

The following information was used to model the RF coverage from the proposed Tartesso Buckeye Tower Site.

- Modeled Covered Area Reliability: 95%.
- Delivered Audio Quality: 3.4.
- Portable: 2.5 W APX 6000 (hip level TX and RX with RSM) + 12db additional loss to model medium buildings (-23 dBd total).
- Frequency Band: P25 Phase-2 TDMA 700MHz.

Motorola Solutions Confidential Restricted

Site Co-ordinates, Antenna heights, ERP and EFS have been provided in the table below.

A formal Coverage Acceptance Test (CATP) is not included in the proposed quote, but can be developed and conducted for an additional cost. However, automated BER validation testing in overlap areas of the Tartesso site will be performed.

Site Name: Tartess Buckeye Tower			**Cell Name: Simulcast J**		
General		**Tansmit**		**Receive**	
Latitiude	33 27 56.63 N	ERP	47.50 dBm	EFS	124.05 dBm
Longitude	112 44 22.21 W				
		Antenna	DSCC80706P	Antenna	DSCC80711P
Elevation	1113.20 feet	Antenna Gain	6.00 dBd	Antenna Gain	10.5 dBd
		Antenna Height	205.00 feet	Antenna Height	230.00 feet
		Launch Delay	0.00 us	Tower Top Amp	YES
				Reserve Gain	9.40 dB

A reference coverage map of Simulcast J is included below depicting the portable 12 dB in-building coverage improvement with the addition of the Buckeye Tartesso site.

MOTOROLA SOLUTIONS

For Information Only

SIM J pre Tartesso

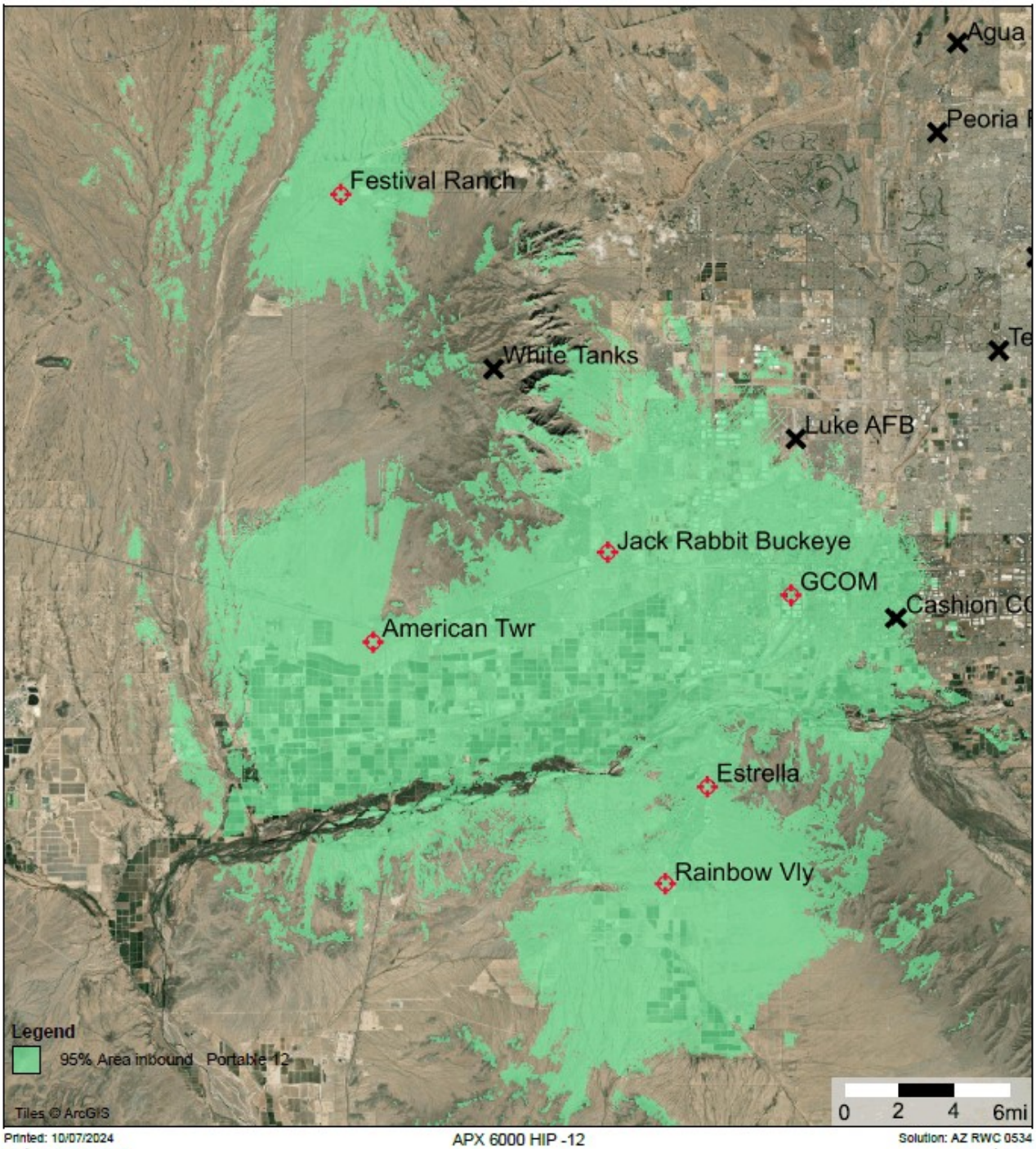

Printed: 10/07/2024
System version: 3.1.9

APX 6000 HIP -12

Solution: AZ RWC 0534
Project: SimJ
Design: Design 34 Sim J 6th sub site Add djn837

This map is intended solely for the equipment configuration stated above.
Coverage can vary significantly if different configurations are used.

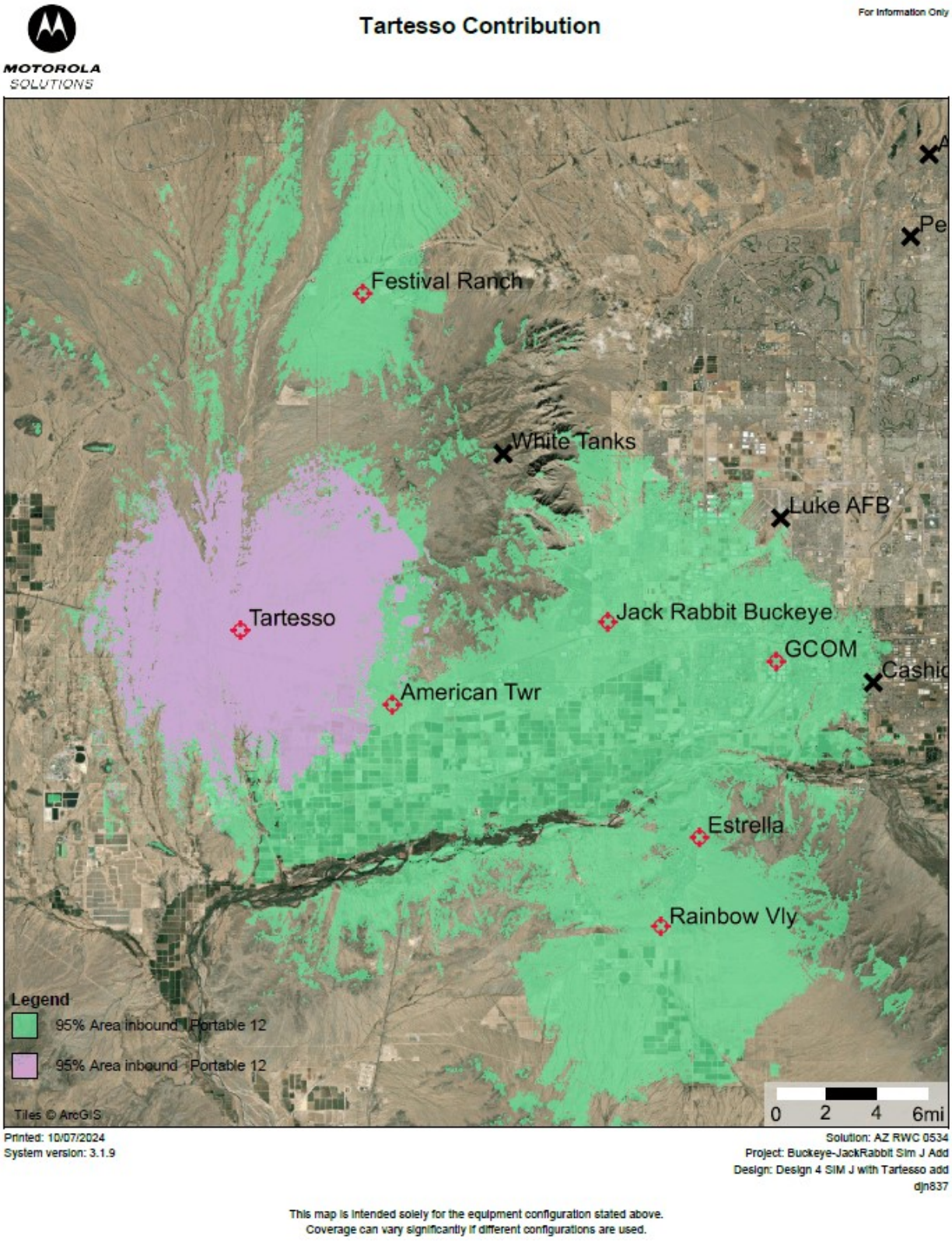

This map is intended solely for the equipment configuration stated above.

Coverage can vary significantly if different configurations are used.

1.5 DESIGN ASSUMPTIONS

- Customer is responsible for providing FCC coordination and licensing for the 700 MHz channels for the site at the proposed ERP.
- Customer will provide all site connectivity to the American Tower Prime Site with a demarcation point at Motorola provided site routers.
- Customer will provide an install ready site meeting all Motorola R56 site standards to accommodate Motorola equipment racks and cabinets.
- Customer factory acceptance test is not included in the proposed scope.
- Motorola will not perform a coverage acceptance test for the proposed new site.
- Site improvements for all sites, including but not limited to R56 deficiencies, are outside the proposed scope and are customer's responsibility.
- Should the City of Buckeye decide to expand on the scope of services provided in this proposal, Motorola can provide such services through the process of a formal Change Order.

1.6 RACK DIAGRAM & INDOOR CONNECTIONS

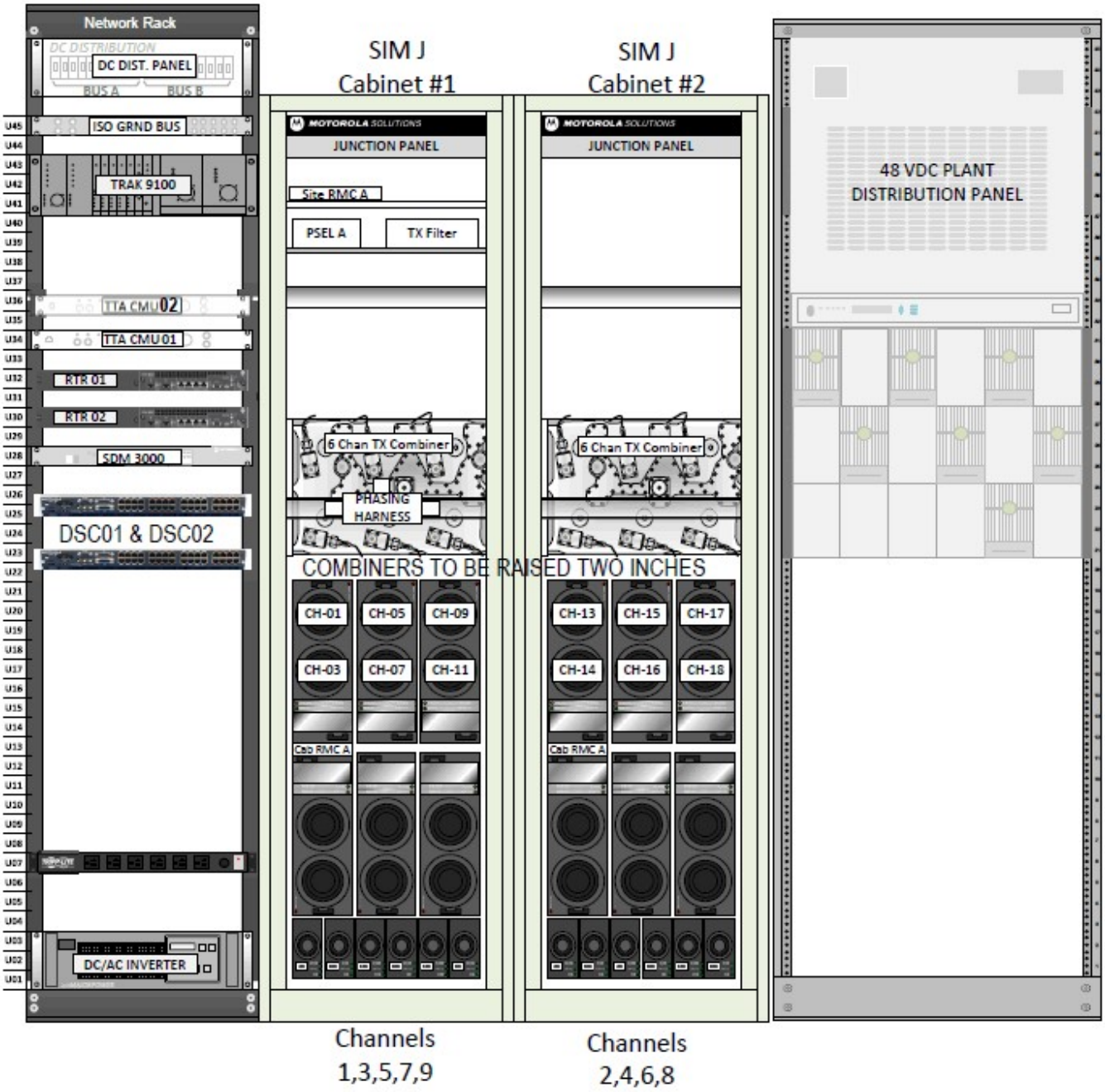

INDOOR INTERCONNECTS

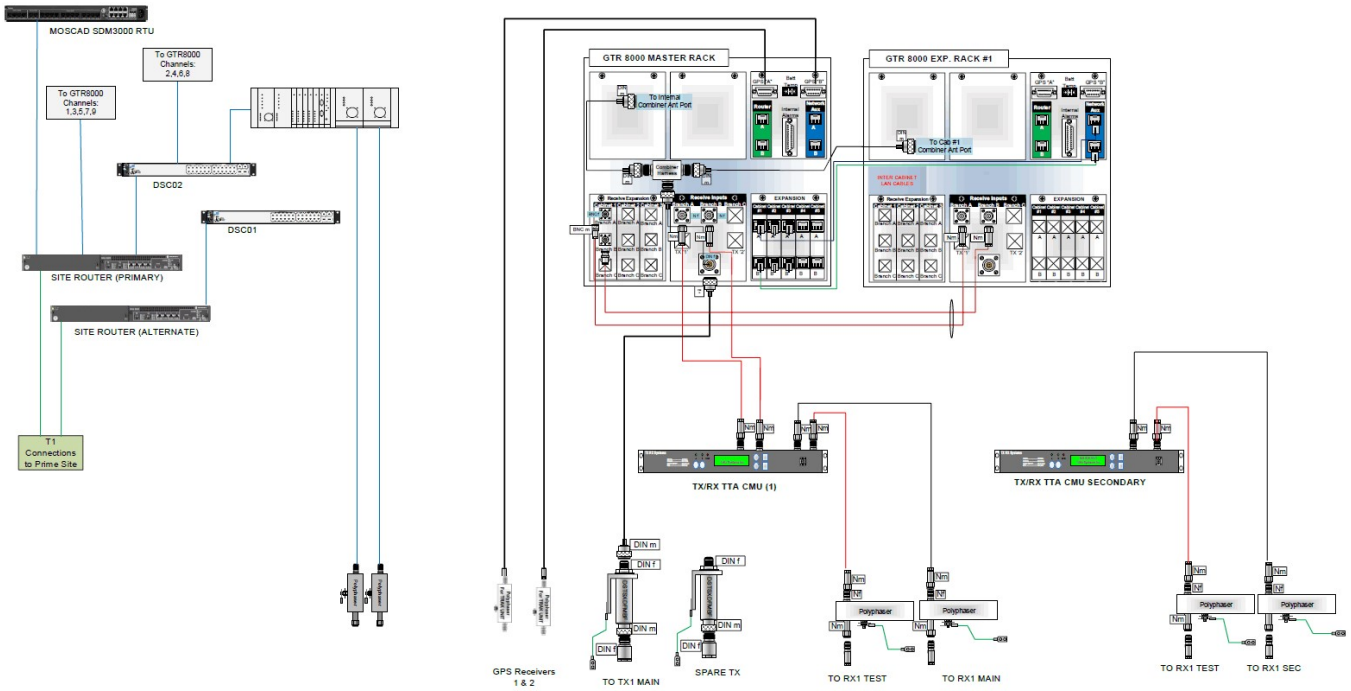

Motorola Solutions Confidential Restricted

SECTION 2

EQUIPMENT LIST

2.1 PROPOSAL EQUIPMENT LIST

LIM	APC	QTY	NOMENCLATURE	DESCRIPTION	UNIT LIST	DISC (%)	UNIT DISC	EXT DISC
1	112	1	SQM01SUM7054A	GTR 8000 EXPANDABLE SITE SUBSYSTEM	$ 6,000.00	15.00%	$ 5,100.00	$ 5,100.00
1	112	1	CA00879AA	ADD: PRIMARY 6 PORT CAVITY COMBINER	$ 8,400.00	15.00%	$ 7,140.00	$ 7,140.00
1	112	2	CA03792AA	ADD: DSC 8000 REFERENCE DISTRIBUTION MODULE	$ 6,000.00	15.00%	$ 5,100.00	$ 10,200.00
1	112	5	CA01193AA	ADD: IP BASED MULTISITE BR SW	$ 34,000.00	15.00%	$ 28,900.00	$ 144,500.00
1	112	1	CA00293AA	ADD: 43RU SCHROFF CABINET	$ 880.00	15.00%	$ 748.00	$ 748.00
1	112	1	X305AC	ADD: QTY 5 GTR 8000 BASE RADIOS	$ 29,500.00	15.00%	$ 25,075.00	$ 25,075.00
1	112	1	CA00855AA	ADD:700--800 MHZ	$ 6,300.00	15.00%	$ 5,355.00	$ 5,355.00
1	112	1	CA02686AA	ADD: AC DC POWER DISTRIBUTION	$ -	15.00%	$ -	$ -
1	112	2	CA00027AC	ADD: CABINET DOOR,LOUVERED	$ 225.00	15.00%	$ 191.25	$ 382.50
1	112	5	CA01842AA	ADD: P25 TDMA SOFTWARE	$ 13,000.00	15.00%	$ 11,050.00	$ 55,250.00
1	112	2	CA00027AB	ADD: CABINET DOOR,SOLID	$ 225.00	15.00%	$ 191.25	$ 382.50
1	112	1	CA00862AA	ADD: SITE & RMC W--CAP OF 7-24BR	$ 2,100.00	15.00%	$ 1,785.00	$ 1,785.00
1	112	5	CA01953AA	ADD: POWER EFFICIENCY PACKAGE	$ 500.00	15.00%	$ 425.00	$ 2,125.00
1	112	1	CA03678AA	ADD: ASTRO SYSTEM RELEASE 2021.1	$ -	15.00%	$ -	$ -
1	112	1	CA00882AA	ADD: 700 MHZ TX FILTER	$ 1,000.00	15.00%	$ 850.00	$ 850.00
1	112	2	CA03740AA	ADD: EXTERNAL TIMING REFERENCE CONN ONLY	$ 55.00	15.00%	$ 46.75	$ 93.50
1	112	2	CA03746AA	ADD: DSC 8000 SIMULCAST RDM SW	$ 8,200.00	15.00%	$ 6,970.00	$ 13,940.00
2	207	1	DSTSXDFMBF	RF SPD, 698-2700MHZ DC BLOCK HIGH PWR, DIN FEM/MALE BI-DIR W/ BRACKET	$ 195.00	10.00%	$ 175.50	$ 175.50
3	207	1	DSGSAKITD	DC POWER SYSTEM,GROUND STRAP KIT - DIN	$ 47.00	10.00%	$ 42.30	$ 42.30
4	351	25	DSEC450	COAXIAL CABLE, 1/2" 50 OHM CORRUGATED COPPER WITH BLACK PE JACKET	$ 3.29	15.00%	$ 2.80	$ 69.91

LIM	APC	QTY	NOMENCLATURE	DESCRIPTION	UNIT LIST	DISC (%)	UNIT DISC	EXT DISC
5	351	1	DSNM50V12	CONNECTOR, N MALE INTERFACE FOR EC4-50	$ 28.25	15.00%	$ 24.01	$ 24.01
6	351	1	DS716M50V12N1	CONNECTOR, 7/16 DIN MALE INTERFACE FOR EC4-50	$ 26.00	15.00%	$ 22.10	$ 22.10
7	207	1	DS1090501WA	RF SPD, 700-1000MHZ BROADBAND 15 VDC PASS NM ANT, NF EQUIP PIP, ASIG	$ 182.00	10.00%	$ 163.80	$ 163.80
8	207	1	DS1090501WA	RF SPD, 700-1000MHZ BROADBAND 15 VDC PASS NM ANT, NF EQUIP PIP, ASIG	$ 182.00	10.00%	$ 163.80	$ 163.80
9	351	25	DSEC150HF	COAXIAL CABLE, 1/4" HIFLEX, 50 OHM WITH BLACK PE JACKET	$ 2.74	15.00%	$ 2.33	$ 58.23
10	351	2	DSNM50B14X	CONNECTOR, N MALE INTERFACE FOR EC1-50-HF	$ 31.50	15.00%	$ 26.78	$ 53.55
11	351	25	DSEC450HF	COAXIAL CABLE, 1/2" HIFLEX, 50 OHM WITH BLACK PE JACKET	$ 3.84	15.00%	$ 3.26	$ 81.60
12	351	2	DSNM50B12X	CONNECTOR, N MALE INTERFACE FOR EC4-50-HF	$ 43.50	15.00%	$ 36.98	$ 73.95
13	351	50	DSEC150HF	COAXIAL CABLE, 1/4" HIFLEX, 50 OHM WITH BLACK PE JACKET	$ 2.74	15.00%	$ 2.33	$ 116.45
14	351	4	DSNM50B14X	CONNECTOR, N MALE INTERFACE FOR EC1-50-HF	$ 31.50	15.00%	$ 26.78	$ 107.10
15	112	1	SQM01SUM7054A	GTR 8000 EXPANDABLE SITE SUBSYSTEM	$ 6,000.00	15.00%	$ 5,100.00	$ 5,100.00
15	112	1	CA00877AA	ADD: CABINET RMC FOR EXPANSION RACK	$ 600.00	15.00%	$ 510.00	$ 510.00
15	112	4	CA01193AA	ADD: IP BASED MULTISITE BR SW	$ 34,000.00	15.00%	$ 28,900.00	$ 115,600.00
15	112	1	CA00293AA	ADD: 43RU SCHROFF CABINET	$ 880.00	15.00%	$ 748.00	$ 748.00
15	112	4	CA01902AA	ADD: P25 DYNAMIC CHANNEL SOFTWARE	$ 10,000.00	15.00%	$ 8,500.00	$ 34,000.00
15	112	1	X304AE	ADD: QTY 4 GTR 8000 BASE RADIOS	$ 23,600.00	15.00%	$ 20,060.00	$ 20,060.00
15	112	1	CA00855AA	ADD:700--800 MHZ	$ 6,300.00	15.00%	$ 5,355.00	$ 5,355.00
15	112	1	CA02686AA	ADD: AC DC POWER DISTRIBUTION	$ -	15.00%	$ -	$ -
15	112	2	CA00027AC	ADD: CABINET DOOR,LOUVERED	$ 225.00	15.00%	$ 191.25	$ 382.50
15	112	2	CA03737AA	ADD: DSC HUB	$ 3,500.00	15.00%	$ 2,975.00	$ 5,950.00
15	112	4	CA01842AA	ADD: P25 TDMA SOFTWARE	$ 13,000.00	15.00%	$ 11,050.00	$ 44,200.00
15	112	2	CA00027AB	ADD: CABINET DOOR,SOLID	$ 225.00	15.00%	$ 191.25	$ 382.50
15	112	4	CA01953AA	ADD: POWER EFFICIENCY PACKAGE	$ 500.00	15.00%	$ 425.00	$ 1,700.00
15	112	1	CA00880AA	ADD: EXPANSION 6 PORT CAVITY COMBINER	$ 8,400.00	15.00%	$ 7,140.00	$ 7,140.00

Use or disclosure of this proposal is subject to the restrictions on the cover page.

LIM	APC	QTY	NOMENCLATURE	DESCRIPTION	UNIT LIST	DISC (%)	UNIT DISC	EXT DISC
15	112	1	CA03678AA	ADD: ASTRO SYSTEM RELEASE 2021.1	$ -	15.00%	$ -	$ -
16	906	5	DSTRAK91061	FOUR PORT DDM	$ 864.00	15.00%	$ 734.40	$ 3,672.00
17	906	1	DSTRAK91009EDC	REMOTE SITE REDUNDANT MODULAR FREQUENCY TIMING SYSTEM DC	$ 35,700.00	15.00%	$ 30,345.00	$ 30,345.00
18	906	1	DSTRAK91071	FOUR PORT IRIG B TIME CODE FDM	$ 1,236.00	15.00%	$ 1,050.60	$ 1,050.60
19	207	1	DSTSXDFMBF	RF SPD, 698-2700MHZ DC BLOCK HIGH PWR, DIN FEM/MALE BI-DIR W/ BRACKET	$ 195.00	10.00%	$ 175.50	$ 175.50
20	207	1	DSGSAKITD	DC POWER SYSTEM,GROUND STRAP KIT - DIN	$ 47.00	10.00%	$ 42.30	$ 42.30
21	351	25	DSEC450	COAXIAL CABLE, 1/2" 50 OHM CORRUGATED COPPER WITH BLACK PE JACKET	$ 3.29	15.00%	$ 2.80	$ 69.91
22	351	1	DSNM50V12	CONNECTOR, N MALE INTERFACE FOR EC4-50	$ 28.25	15.00%	$ 24.01	$ 24.01
23	351	1	DS716M50V12N1	CONNECTOR, 7/16 DIN MALE INTERFACE FOR EC4-50	$ 26.00	15.00%	$ 22.10	$ 22.10
24	207	1	DS1090501WA	RF SPD, 700-1000MHZ BROADBAND 15 VDC PASS NM ANT, NF EQUIP PIP, ASIG	$ 182.00	10.00%	$ 163.80	$ 163.80
25	207	1	DS1090501WA	RF SPD, 700-1000MHZ BROADBAND 15 VDC PASS NM ANT, NF EQUIP PIP, ASIG	$ 182.00	10.00%	$ 163.80	$ 163.80
26	351	25	DSEC150HF	COAXIAL CABLE, 1/4" HIFLEX, 50 OHM WITH BLACK PE JACKET	$ 2.74	15.00%	$ 2.33	$ 58.23
27	351	2	DSNM50B14X	CONNECTOR, N MALE INTERFACE FOR EC1-50-HF	$ 31.50	15.00%	$ 26.78	$ 53.55
28	351	25	DSEC450HF	COAXIAL CABLE, 1/2" HIFLEX, 50 OHM WITH BLACK PE JACKET	$ 3.84	15.00%	$ 3.26	$ 81.60
29	351	2	DSNM50B12X	CONNECTOR, N MALE INTERFACE FOR EC4-50-HF	$ 43.50	15.00%	$ 36.98	$ 73.95
30	509	1	TRN7343A	RACK 7.5'	$ 495.00	15.00%	$ 420.75	$ 420.75
31	454	1	DLN6455R	KIT,CONFIGURATION SERVICE SOFTWARE	$ 25.00	15.00%	$ 21.25	$ 21.25
32	112	1	DLN6781A	FRU POWER SUPPLY	$ 2,420.00	15.00%	$ 2,057.00	$ 2,057.00
33	112	1	DLN6895A	FRU: PA 7/800 MHZ	$ 3,200.00	15.00%	$ 2,720.00	$ 2,720.00
34	112	1	DLN6885A	FRU: XCVR 7/800 MHZ V2	$ 3,500.00	15.00%	$ 2,975.00	$ 2,975.00
35	591	1	DLN6898A	FRU: FAN MODULE	$ 300.00	15.00%	$ 255.00	$ 255.00
36	457	2	DS442035492	TTA, MOTOROLA CU (ESS), 794-824 MHZ, 2DC, DUAL DIVERSITY, N TTA CONNECTORS	$ 9,660.00	20.00%	$ 7,728.00	$ 15,456.00

Motorola Solutions Confidential Restricted
Contract No. 2025250
Motorola Solutions, Inc.

LIM	APC	QTY	NOMENCLATURE	DESCRIPTION	UNIT LIST	DISC (%)	UNIT DISC	EXT DISC
37	457	2	DS440032971	TTA 440, MOTOROLA CU (ESS), 794-824 MHZ, BYPASS, TEST PORT, 2DC	$ 5,479.00	20.00%	$ 4,383.20	$ 8,766.40
38	207	1	DS265503	DC POWER SYSTEM,INVERTER, 1000VA 48VDC/120VAC ESI SERIES 1KVA/800W	$ 3,151.00	10.00%	$ 2,835.90	$ 2,835.90
39	207	1	DSDST20A	DISTRIBUTION PANEL (UL) W/ REAR COVER (USES PBA PLUG-IN BREAKERS)	$ 2,066.00	10.00%	$ 1,859.40	$ 1,859.40
40	207	1	DSBBA800	ISOLATED GROUND BUS BAR ASSEMBLY, 800A	$ 594.00	10.00%	$ 534.60	$ 534.60
41	207	2	DSPBA10	PBA PLUG-IN BREAKER 10 AMP	$ 79.00	10.00%	$ 71.10	$ 142.20
42	207	4	DSPBA5	PBA PLUG-IN BREAKER 5 AMP	$ 79.00	10.00%	$ 71.10	$ 284.40
43	207	1	DSOP820B	PDU, 120V HARDWIRE (8) 20A OUTLET PDU WITH TYPE 3 SAD PROTECTION	$ 1,270.00	10.00%	$ 1,143.00	$ 1,143.00
44	207	1	DS1101378	RACK MT ADAPTER PLATE, 19 IN FOR DSOP820B, DSOP820B2 & DSNSOP820B	$ 68.00	10.00%	$ 61.20	$ 61.20
45	207	2	DSTSJ48CLT	SPD, RJ-45 OR HARDWIRE CONNECTED FOR T1/E1, PROTECTS 4 WIRES	$ 133.00	10.00%	$ 119.70	$ 239.40
46	207	1	DSTSJADP	RACK MOUNT GROUND BAR, 19 IN FOR TSJ AND WPH SERIES DATA SPDS	$ 110.00	10.00%	$ 99.00	$ 99.00
47	382	1	V840AB	RTU_SW_LIC_PER_MNI_M-W_RADIO	$ 325.00	15.00%	$ 276.25	$ 276.25
48	469	1	F4544A	SITE MANAGER ADVANCED	$ 3,000.00	15.00%	$ 2,550.00	$ 2,550.00
49	382	1	V839AB	ADD:RTU SFWR LIC FOR MOSCAD I--O	$ 110.00	15.00%	$ 93.50	$ 93.50
50	469	1	VA00872AA	ADD: SDM ASTRO RTU FW CURR ASTRO REL	$ 1,850.00	15.00%	$ 1,572.50	$ 1,572.50
51	469	1	VA00905AA	ADD:24--48 VDC PS TO SM	$ 120.00	15.00%	$ 102.00	$ 102.00
52	469	3	V592AB	AAD TERM BLCK & CONN WI	$ 90.00	15.00%	$ 76.50	$ 229.50
53	147	2	T8547A	SITE ROUTER & FIREWALL- DC	$ 3,090.00	15.00%	$ 2,626.50	$ 5,253.00
53	147	2	CA03445AA	ADD: MISSION CRITICAL HARDENING	$ 3,300.00	15.00%	$ 2,805.00	$ 5,610.00
53	147	2	CA03448AA	ADD: STATEFUL FIREWALL	$ 1,000.00	15.00%	$ 850.00	$ 1,700.00
SP	457	1	DS442035492	TTA, MOTOROLA CU (ESS), 794-824 MHZ, 2DC, DUAL DIVERSITY, N TTA CONNECTORS	$ 9,660.00	20.00%	$ 7,728.00	$ 7,728.00
SP	457	1	DS440032971	TTA 440, MOTOROLA CU (ESS), 794-824 MHZ, BYPASS, TEST PORT, 2DC	$ 5,479.00	20.00%	$ 4,383.20	$ 4,383.20
SP	677	1	DLN1444A	FRE: DSC 8000	$ 10,500.00	15.00%	$ 8,925.00	$ 8,925.00

Use or disclosure of this proposal is subject to the restrictions on the cover page.

LIM	APC	QTY	NOMENCLATURE	DESCRIPTION	UNIT LIST	DISC (%)	UNIT DISC	EXT DISC
SP	677	1	DLN8035A	FRU: DSC HUB	$ 3,500.00	15.00%	$ 2,975.00	$ 2,975.00
54	877	1	SQM01SUM0323A	ASTRO MASTER SITE	$ -	15.00%	$ -	$ -
54	877	1	UA00160AA	ADD: PHASE 2 DYNAMIC TG ASGNMT SITE LIC	$ 18,000.00	15.00%	$ 15,300.00	$ 15,300.00
54	877	4	UA00162AA	ADD: DYNAMIC CHAN PER G-SERIES BASE RADIO	$ 2,000.00	15.00%	$ 1,700.00	$ 6,800.00
54	877	9	UA00161AA	ADD: P25 TDMA PER G-SERIES BASE RADIO	$ 3,000.00	15.00%	$ 2,550.00	$ 22,950.00
54	877	2	CA01316AA	ADD:UNC ADDTL DEVICE LIC (QTY 10)	$ 1,500.00	15.00%	$ 1,275.00	$ 2,550.00
54	877	1	UA00159AB	ADD: P25 PHASE 2 TDMA TRKNG OP SITE LIC	$ 30,000.00	15.00%	$ 25,500.00	$ 25,500.00
54	877	1	UA00153AB	ADD: ASTRO 25 FDMA SITE LICENSE	$ 30,000.00	15.00%	$ 25,500.00	$ 25,500.00
54	877	1	CA03517AD	ADD: CORE EXPANSION	$ -	15.00%	$ -	$ -
55	112	1	T7140A	G-SERIES SOFTWARE UPGRADE	$ -	15.00%	$ -	$ -
55	112	1	CA01914AB	ADD: SW UPGRADE LIC SINGLE EXP	$ 1,350.00	15.00%	$ 1,147.50	$ 1,147.50
							TOTAL	**$732,219.10**

SECTION 3

STATEMENT OF WORK

3.1 TASK OVERVIEW

Motorola will install and configure the proposed equipment summarized in the attached System Description and equipment list. The following table describes the project tasks and responsibilities involved throughout the lifecycle of the project.

Prior to starting any equipment installations, Motorola and Buckeye shall conduct a site readiness review examine existing work, or work performed by others, that is required to support the proposed design. Implementation services included as part of this proposal are based on a single mobilization and will occur between normal business hours, Monday – Friday, 8:00am-4:30pm. Should Buckeye require services to occur during non-business hours, additional costs may apply and will be handled via the change order process.

Project Tasks and Responsibilities

Tasks	Motorola	Buckeye
Project Initiation		
Execute contract and distribute contract documents.	X	X
Assign a Project Manager as a single point of contact.	X	X
Schedule kickoff meeting.	X	
Project Administration		
Ensure that project team members attend all meetings relevant to their role on the project.	X	X
Hold regular project status meetings as agreed upon; record and distribute meeting minutes.	X	
Maintain responsibility for third-party services contracted by Motorola Solutions.	X	
Maintain responsibility for Customer's vendors and issues outside of Motorola Solutions' control.		X
Complete assigned project tasks according to the project schedule.	X	X
Submit project milestone completion document	X	
Upon completion of tasks, approve project milestone completion documents.		X
Project Kickoff / Design Review		
Introduce team, review roles, and decision authority.	X	X
Review Customer's operational requirements, project scope and objectives.	X	X
Review the Design Documents and Statement of Work.	X	X
Develop cutover plan and document final cutover process.	X	X
Develop or update mutually agreed upon detailed project schedule (Performance Schedule).	X	X

Motorola Solutions Confidential Restricted

Provide heat load and power requirements for new equipment.	X	
Provide backhaul performance specifications and demarcation points.	X	
Complete the required forms for RF frequency coordination and licensing.		X
Ensure that RF frequency availability and licensing meet project requirements, and pay licensing and frequency coordination fees.		X
Provide T1 channel assignments and dropping requirements at each location.		X
Pay licensing and frequency coordination fees as required		X
Review safety, security, and site access procedure.	X	X
Update design documents, including System Description, Statement of Work, Project Schedule, and Acceptance Test Plan, based on Design Review agreements	X	
Execute Change Order in accordance with all material changes to the Contract resulting from the Design Review.	X	X
Equipment Storage		
Provide secure warehousing.		X
Coordinate receipt of and inventory solution equipment with designated contact.	X	
Site Access		
Provide site owners/managers with written notice to provide entry to sites identified in the project design documentation.		X
Site Planning		
Perform all tasks and deliverables as required to provide an equipment shelter and tower meeting the requirements of the proposed design.		X
Conduct site evaluations to determine site readiness to accommodate proposed equipment including space, power, site grounding, and general Standards and Guidelines for Communication Sites (R56).	X	
Submit site evaluation report and advise Customer of any site conditions that need addressed prior to installations.	X	
Assume responsibility for resolution of site deficiencies.		X
Installation		
Deliver solution equipment to installation location.	X	
Install all proposed fixed equipment as outlined in the System Description and equipment list, except tower top amp equipment, based upon the agreed-upon floor plans, connecting audio, control, and radio transmission cables to connect equipment to the power panels or receptacles, and audio/control line connection points. Installation performed in accordance with R56 standards and state/local codes.	X	
Install DC power cabling between Customer provided DC plant and Motorola equipment.	X	
Bond installed equipment to the provided ground system.	X	
Label installed equipment, racks, and cables.	X	
Perform audit of installed equipment to ensure compliance with	X	

Use or disclosure of this proposal is subject to the restrictions on the cover page.

requirements and R56 installation standards.		
Install other equipment and subsystems not specifically listed in Motorola's equipment list and design documents.		X
Interface and Configuration		
Provide system interconnections that are not specifically outlined in the system design, including dedicated T1 circuits or other types of connectivity.		X
Install and terminate all network cables between site routers demarcation port backhaul transport including microwave, leased lines, and Ethernet.		X
Configure ASTRO 25 system to support the new RF sites.	X	
Integrate the RF sites into the system to ensure proper operation.	X	
System Optimization and Testing		
Verify that all audio and data levels are at factory specified settings.	X	
Verify communication interfaces between sites and devices for proper operation.	X	
Ensure that functionality meets manufacturers' specifications and complies with the final configuration established during design review.	X	
Functional Acceptance Testing		
Verify the operational functionality and features of the solution supplied by Motorola Solutions, as contracted.	X	
Witness the functional testing.		X
Document all issues that arise during the acceptance tests.	X	
If any major task for the system as contractually described fails during the Customer acceptance testing or beneficial use, repeat that particular task after Motorola determines that corrective action has been taken.	X	
Document the results of the acceptance tests and present to Customer for review.	X	
Review and approve final acceptance test results.		X
Resolve any minor task failures before Final System Acceptance.	X	
Transition to Service		
Review the items necessary for transitioning the project to service.	X	
Provide a Customer Support Plan detailing the warranty support associated with the contract equipment.	X	
Finalize Documentation		
Provide manufacturer's installation material, part list and other related material to Customer upon project completion.	X	
Provide an electronic as-built system manual on CD or other Customer preferred electronic media. The documentation will include the following: Site Block Diagrams Site Equipment Rack Configurations ATP Test Checklists Functional Acceptance Test Plan Test Sheets and Results Equipment Inventory List Documentation will be delivered in Adobe PDF format on CD/DVD or	X	

USB.		
Receive and approve documentation.		X
Training (Not Included)		
Final Acceptance		
Sign the Final Project Acceptance Certificate.	X	X

3.2 CIVIL WORK

All site planning, site engineering, and site construction is the responsibility of Buckeye.

3.3 CHANGE ORDER PROCESS

Either Party may request changes within the general scope of this Agreement. If a requested change causes an increase or decrease in the cost or time required to perform this Agreement, the Parties will agree to an equitable adjustment of the Contract Price, Performance Schedule, or both, and will reflect the adjustment in a change order. Neither Party is obligated to perform requested changes unless both Parties execute a written change order.

SECTION 4

PROJECT SCHEDULE

The estimated time for completion of the project is 6 to 8 months from receipt of a purchase order subject to equipment lead times at the time of order. A preliminary summary schedule is included below. A mutually agreed upon detailed project schedule will be developed by the Motorola Solutions' Project Manager upon contract award during the Contract Design Review (CDR) phase of the project.

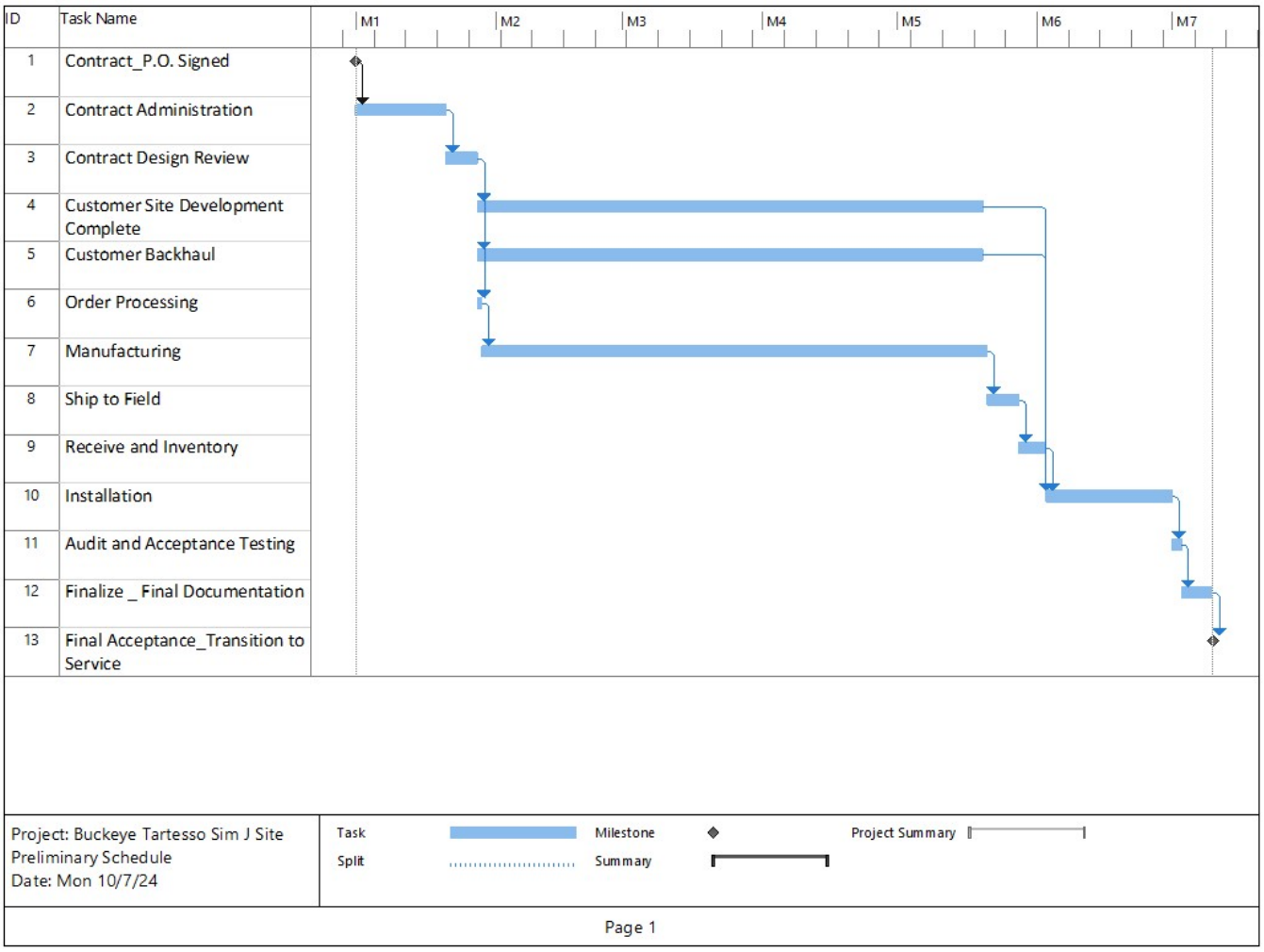

SECTION 5

ACCEPTANCE TEST PLAN

System Acceptance of the proposed solution will occur upon successful completion of a Functional Acceptance Test Plan (FATP), which will test the features, functions, and failure modes for the installed equipment in order to verify that the solution operates according to its design. A detailed FATP will be developed and finalized during the Design Review.

Coverage verification testing and a Coverage Acceptance Test has not been included in the proposed scope and pricing.

SECTION 6

WARRANTY AND SUPPORT

Motorola will provide warranty services per our standard warranty terms and conditions as outlined within the terms and conditions of Arizona State Contract # CTR046830. In addition to the warranty services, Motorola Solutions will provide during the Warranty Period above-warranty services that are described generally below. A full description and statement of work describing the services that will be provided are available upon request.

6.1 TECHNICAL SUPPORT SERVICE

Motorola Technical Support service provides an additional layer of support through centralized, telephone consultation for issues that require a high level of communications network expertise and troubleshooting capabilities. Technical Support is delivered by the System Support Center (SSC). The SSC is staffed with trained, skilled technologists specializing in the diagnosis and swift resolution of network performance issues. These technologists have access to a solutions database as well as in house test labs and development engineers. Technical Support cases are continuously monitored against stringent inbound call management and case management standards to ensure rapid and consistent issue resolution. Technical Support service translates into measurable, customer-specific metrics for assured network performance and system availability.

6.2 DISPATCH SERVICE

Motorola's Dispatch Service ensures that trained and qualified technicians are dispatched to diagnose and restore your communications network. Following proven response and restoration processes, the local authorized service center in your area is contacted and a qualified technician is sent to your site. An automated escalation and case management process is followed to ensure that technician site arrival and system restoration comply with contracted response and restore times. Once the issue has been resolved, the System Support Center verifies resolution and with your approval, closes the case. Activity records are also available to provide a comprehensive history of site performance, issues, and resolution.

6.3 ON-SITE INFRASTRUCTURE RESPONSE

Motorola On-Site Infrastructure Response provides local, trained and qualified technicians who arrive at your location to diagnose and restore your communications network. Following proven response and restore processes, Motorola Dispatch contacts the local authorized service center in your area and dispatches a qualified technician to your site. An automated escalation and case management process ensures that technician site arrival and system restoration comply with contracted response times. The field technician restores the system by performing first level

troubleshooting on site. If the technician is unable to resolve the issue, the case is escalated to the System Support Center or product engineering teams as needed.

6.4 INFRASTRUCTURE REPAIR

Infrastructure Repair service provides for the repair of all Motorola-manufactured equipment, as well as equipment from third-party infrastructure vendors. All repair management is handled through a central location eliminating your need to send equipment to multiple locations.

Comprehensive test labs replicate your network in order to reproduce and analyze the issue. State-of-the-art, industry-standard repair tools enable our technicians to troubleshoot, analyze, test, and repair your equipment. Our ISO9001 and TL9000-certified processes and methodologies ensure that your equipment is quickly returned maintaining the highest quality standards.

6.5 NETWORK PREVENTATIVE MAINTENANCE

Network Preventative Maintenance provides an operational test and alignment on your infrastructure or fixed network equipment to ensure that it meets original manufacturer's specifications. Trained technicians:

- Physically inspect equipment.
- Remove dust and foreign substances.
- Clean filters.
- Measure, record, align and adjust equipment to meet original manufacturer's specifications.

This service is performed based on a schedule agreed upon between you and Motorola. Network Preventative Maintenance proactively detects issues that may result in system malfunctions and operational interruptions.

SECTION 7

PRICING SUMMARY

Description	Price
Equipment Total	$863,564.00
AZ State Contract Discount	-$131,344.90
Systems Integration and Warranty Support Services	$316,631.43
SUBTOTAL (Before Tax)	**$1,048,850.53**
Sales Tax (on equipment only at 9.3%)	$68,096.38
TOTAL (Including Tax)	**$1,116,946.91**

Integration with the Regional Wireless Cooperative, (RWC) may require additional work by the RWC including potential changes to fees, and operations and maintenance costs. These costs are not reflected in this proposal and should be discussed with the RWC Executive Director.

Except for a payment that is due on the Effective Date, Customer will make payments to Motorola within thirty (30) days after the date of each invoice. Customer will make payments when due in the form of a check, cashier's check, or wire transfer drawn on a U.S. financial institution. If Customer has purchased additional Professional or Subscription services, payment will be in accordance with the applicable addenda. Payment for the System purchase will be in accordance with the following milestones.

System Purchase

1. 25% of the Contract Price due upon contract execution (due upon effective date);
2. 60% of the Contract Price due upon shipment of equipment;
3. 10% of the Contract Price due upon installation of equipment; and
4. 5% of the Contract Price due upon Final Acceptance.

Motorola shall make partial shipments of equipment and will submit invoices based on equipment shipped and accepted by customer. In addition, Motorola shall invoice for installations completed on a site-by-site basis or when professional services are completed, when applicable. The value of the equipment shipped/services performed will be determined by the value shipped/services performed as a percentage of the total milestone value. Unless otherwise specified, contract discounts are based upon all items proposed and overall system package. For invoicing purposes only, discounts will be applied proportionately to the FNE and Subscriber equipment values to total contract price. Overdue invoices will bear simple interest at the maximum allowable rate by state law.

SECTION 8

TERMS AND CONDITIONS

This proposal is subject to the terms and conditions of the State of Arizona Contract #CTR046830, its Exhibits and applicable Addenda ("Contract"). This proposal shall remain valid through November 27, 2024. The City of Buckeye may accept the proposal by issuing a signed PO specifically referencing "PO is subject to the terms and conditions of the State of Arizona Contract #CTR046830 and Motorola's proposal dated October 25, 2024."

CITY OF BUCKEYE
Regular Council Meeting
COUNCIL ACTION REPORT

MEETING DATE: 12/17/24	**AGENDA ITEM:** 4.M. CIP No. 105660 Rooks Road Bridge at BID - Buckeye Water Conservation and Drainage District construction of a bridge crossing over the District's canal
DATE PREPARED: 12/17/24	**DISTRICT NO.:** 1
STAFF LIAISON: James Zwerg, CIP Project Manager, jzwerg@buckeyeaz.gov, (602) 558-2076	
DEPARTMENT: Engineering	**AGENDA ITEM TYPE:** Consent Agenda Items / New Business

ACTION/MOTION: (This language identifies the formal motion to be made by the Council)
Council to take action on the Intergovernmental Agreement (IGA) between the City of Buckeye, an Arizona municipal corporation, and Buckeye Water Conservation and Drainage District, an irrigation and water conservation district, for a bridge crossing and concomitant easement for public roadway and utilities, in connection with Capital Improvement Project (CIP) No. 105660 Rooks Road Bridge Project at BID, in an amount not to exceed $3,523,418.58; and authorize the City Manager to finalize the IGA in substantially the form and format presented, and to execute and deliver the same; and to authorize and direct the Mayor, City Manager, City Attorney, and City Clerk to take all steps necessary to carry out the purpose and intent of the IGA.

SUMMARY

PROJECT DESCRIPTION:
The Buckeye Water Conservation and Drainage District (BWCDD), a/k/a BID, canal bridge construction is the key component required for the construction of Rooks Road. The BWCDD canal bridge has been designed, reviewed and is ready for construction. The invoice from BWCDD to perform this scope of work is $3,523,418.58. Pursuant to the Intergovernmental Agreement, BWCDD will grant an easement for public roadway and utilities over the canal bridge. The funds for this work are under CIP # 105660 and this scope is within budget.

BENEFITS:
This scope of work is the one of many required to be completed prior to the construction of Rooks Road between MC85 and Baseline Road.

FUTURE ACTION:
No Future Action.

FINANCIAL IMPACT STATEMENT:
This project is programed into the FY25 CIP # 105660 Rooks Road Bridge at BID project, with the budget of $10,590,000 (all phases and scopes). The Cost Estimation Letter/Invoice is in the amount of $3,523,418.58, and falls within the allotted budgeted amount for FY25.

CURRENT FISCAL YEAR TOTAL COST:
The Intergovernmental Agreement (IGA) for the bridge canal crossing construction is in an amount not to exceed $3,523,418.58.

BUDGETED:

Yes

FISCAL YEAR:
FY25

FUND/DEPARTMENT:
50213170-543181

Items related to a project or facility location must include an attached vicinity map for Council Review.
ATTACHMENTS:
CIP105660_8x10.pdf
REVISED INVOICE 2149-8.pdf
Revised BWC-2149 Cost Estimate Letter Phase 3.pdf
24-1205 CityofBuckeyeCIP-LOI Draft IGA.pdf

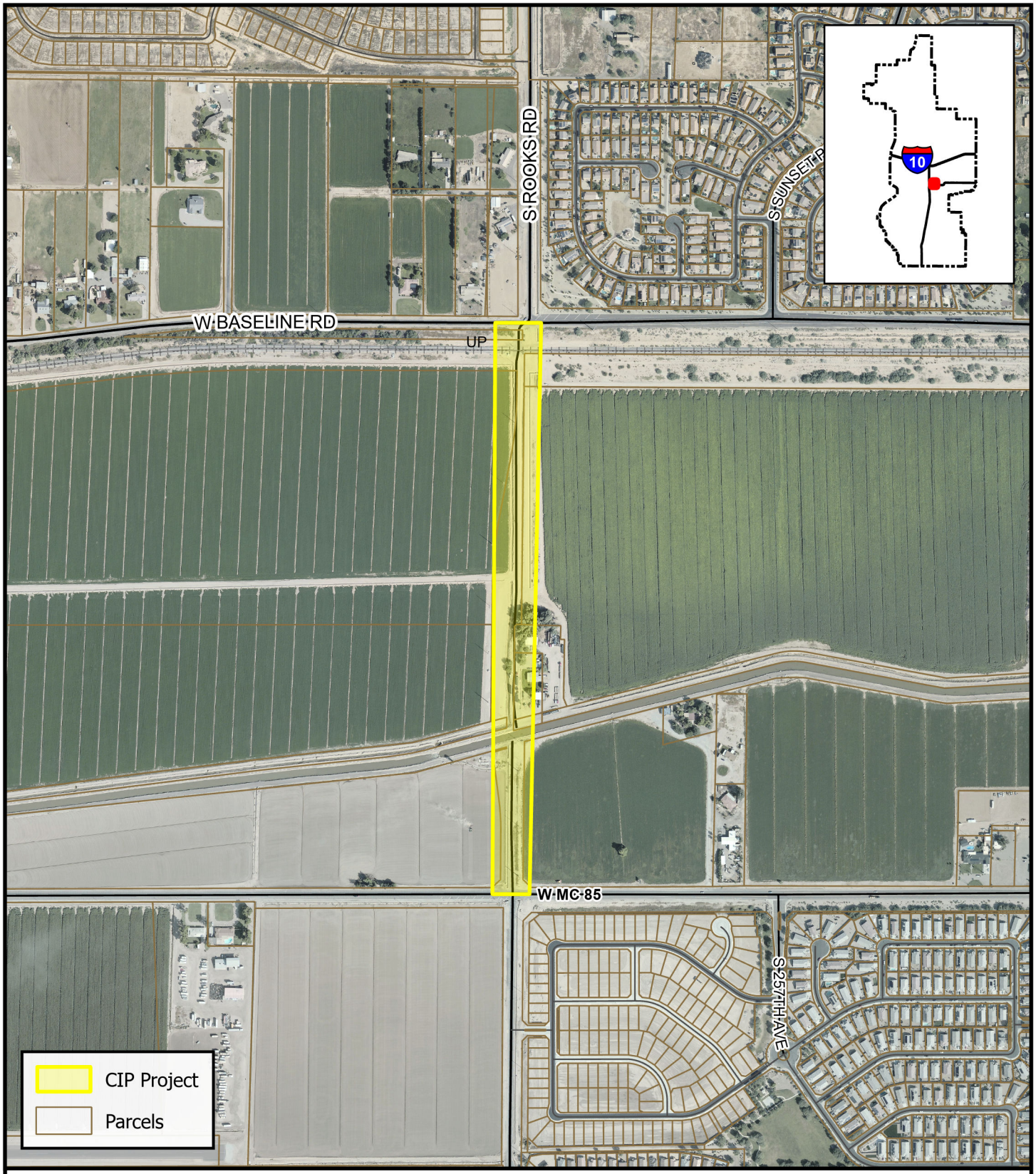

BUCKEYE, AZ

While every effort has been made to ensure the accuracy of this information, the City of Buckeye makes no warranty, expressed or implied, as to its absolute accuracy and expressly disclaims liability for the accuracy thereof.

CIP 105660 Rooks Road Bridge at BID

0 300 600 1,200 Feet

N

Date: 7/2

Buckeye Water Conservation DD
205 E ROOSEVELT AVE
BUCKEYE, AZ 85326

PHONE (623) 386-2196
FAX (623) 386-7789

INVOICE

DATE	INVOICE #
11/13/2024	2149-8 Revised

REVIEWED
By Jim Zwerg at 3:51 pm, Nov 18, 2024

APPROVED
By Jim Zwerg at 3:51 pm, Nov 18, 2024

CIP 105660 - Construction
Org & Obj 50213170 - 543181
COB Vendor (Utility) #1251

BILL TO

CITY OF BUCKEYE
ATTN: AP
530 E MONROE
BUCKEYE, ARIZONA 85326

TERMS
Due on receipt

ITEM CODE	DESCRIPTION	AMOUNT
PJ BWC-2149 Rooks Rd Bridge	Rooks Rd Bridge Phase 3	
	Rooks Rd Bridge Construction Costs	$2,907,107.80
	Rooks Rd Bridge Contingency Costs	$250,000.00
	Rooks Rd Bridge Engineering Costs	$274,508.00
	Rooks Rd Bridge BWCDD Fees	$290,710.78
	Payment Made for Phase 3	-$198,908.00

THANK YOU FOR YOUR BUSINESS!	Balance Due	$3,523,418.58

Buckeye Water Conservation & Drainage District
205 E. Roosevelt Ave
Buckeye, Arizona 85326
623-386-2196

Project: BWC-2149 Phase 3

Rooks Road Bridge, Buckeye, Arizona

Mr. Cotterman,

Please review the following information and cost structure required for BWCDD to complete the construction for this phase of this project. Please note that all fees must be paid in advance prior to BWCDD beginning construction. Please sign where indicated and submit with payment.

Construction costs, BWCDD Administrative fees, and Legal Fees will be required prior to construction to commence, in addition to all Easement Agreements being finalized.

If you have any questions, please contact Wes Kerr, BWCDD Project Manager.

Buckeye Water Conservation & Drainage District
205 E. Roosevelt Ave
Buckeye, Arizona 85326
623-386-2196

	CONSTRUCTION PHASE 3 – BRIDGE					
ITEM #	**DESCRIPTION**	**QTY.**	**UNIT**	**UNIT PRICE**	**EXTENSION**	
	PHASE 3					
1	MOBILIZATION	1	LS	$127,980.00	$127,980.00	
2	CONSTRUCTION SURVEY & LAYOUT	1	LS	$68,750.00	$68,750.00	
3	QUALITY CONTROL MATERIAL TESTING	1	LS	$35,800.00	$35,800.00	
4	GAMA TESTING (IF NEEDED)	1	LS	$35,000.00	$35,000.00	
5	REBAR	1	LS	$160,350.00	$160,350.00	
6	DRILLED SHAFTS (3’ DIA. – 40’ DEPTH)	21	EA	$27,900.00	$585,900.00	
7	FURNISH & INSTALL GIRDERS	1,424	LF	$760.00	$1,082,240.00	
8	DEMO AND REMOVE CHANNEL LINING	246	SF	$15.00	$3,690.00	
9	4500 psi CONCRETE ABUTMENTS	143	CY	$1,625.00	$232,375.00	
10	4500 psi APPROACH SLABS	2,566	SF	$48.00	$123,168.00	
11	4500 psi PARAPET WALL	720	SF	$74.90	$53,928.00	
12	4500 psi SIDEWALK	600	SF	$12.00	$7,200.00	
13	4500 psi CURBS	100	LF	$76.00	$7,600.00	
14	4500 psi BRIDGE DECK (6” thickness)	109	CY	$1,350.00	$147,150.00	
15	4000 psi RETAINING WALL	1,002	SF	$80.00	$80,160.00	
16	PLACE 6” DECOMPOSED GRANITE	28	TON	$235.00	$6,580.00	
17	PLACE CHANNEL LINING	663	SF	$19.60	$12,994.80	
18	FURNISH & INSTALL BURROW	2,950	CY	$36.00	$106,200.00	
19	STRUCTURAL EXCAVATION	123	CY	$94.00	$11,562.00	
20	STRUCTURAL BACKFILL	210	CY	$88.00	$18, 480.00	
	PHASE 3 TOTAL				**$2,907,107.80**	
ITEM #	**DESCRIPTION**	**QTY.**	**UNIT**	**UNIT PRICE**	**EXTENSION**	
21	CONTINGENCY	1	EA	$250,000	$250,000.00	
	PHASE 3 TOTAL				**$250,000.00**	

Buckeye Water Conservation & Drainage District
205 E. Roosevelt Ave
Buckeye, Arizona 85326
623-386-2196

	ENGINEERING PHASE 3 - BRIDGE					
ITEM #	**DESCRIPTION**	**QTY.**	**UNIT**	**UNIT PRICE**	**EXTENSION**	
22	DESIGN & ENGINEERING	1	LS	$191,908.00	$191,908.00	***PAID**
23	LEGAL DRAWING & DESCRIPTIONS	2	EA	$3,500.00	$7,000.00	***PAID**
24	CONS MANAGEMENT/OBSERVATION/ INSPECTION FEES (INCDULES TRAVEL TIME & EXPENSES)	1	EA	$75,600.00	$75,600.00	
	PHASE 3 TOTAL				**$274,508.00**	
	BWCDD FEES PHASE 3 - BRIDGE					
ITEM #	**DESCRIPTION**	**QTY.**	**UNIT**	**UNIT PRICE**	**EXTENSION**	
25	DEVELOPMENT FEE (10% of Phase 3 const.)	1	EA	$290,710.78	$290,710.78	
	PHASE 3 TOTAL				**$290,710.78**	
	TOTAL PROJECT COST – PHASE 3				**$3,722,326.58**	
	CREDIT FOR ITEMS ALREADY PAID (22 &23)				**$198,908.00**	
	TOTAL PROJECT COST TO BE PAID – PHASE 3				**$3,523,418.58**	

_____ _____

Wes Kerr, BWCDD Project Manager Daniel Cotterman, City Manager

Date _____ Date _____

BUCKEYE, AZ
CITY MANAGER'S OFFICE

November 27, 2024

Buckeye Water Conservation and Drainage District

205 E. Roosevelt

Buckeye, Arizona 85326

ATTN: Noel Carter

City of Buckeye Capital Improvement Program – Letter of Intent – Rooks Road Bridge over Main Canal, Phase 3

Mr. Carter,

This letter shall serve as a "Letter of Intent," on behalf of the City of Buckeye for the Buckeye Water Conservation and Drainage District to perform construction of the Rooks Road Bridge over the Main Canal. Construction will be in accordance with the "Rooks Road Bridge Crossing BWCDD Main Canal Phase 3 Project Plans".

The governmental procurement approval process has been initiated as is statutorily required. The city has budgeted a total of $3,523,418.58 for your portion of the work.

We expect to receive final approval of City Council in the December 17, 2024 meeting, which will include approval of an intergovernmental agreement (IGA), memorializing the parties' mutual understanding concerning the construction of the bridge crossing and its use as a public roadway. The substantial form of the IGA is attached hereto. Once the IGA is executed, the City will follow up with a purchase order on behalf of the City of Buckeye within thirty (30) days.

Best Regards,

Javier Setovich, PE

Deputy City Manager

cc: Riley Quinlan, Interim CIP Management

INTERGOVERNMENTAL AGREEMENT
BETWEEN THE
CITY OF BUCKEYE
AND THE
BUCKEYE WATER CONSERVATION AND DRAINAGE DISTRICT

This Intergovernmental Agreement ("Agreement") is made this _____ day of December, 2024, by and between City of Buckeye, an Arizona municipal corporation ("City") and Buckeye Water Conservation and Drainage District, an irrigation and water conservation district, a municipal corporation, and a political subdivision of the State of Arizona ("District") (Individually, a "Party"; collectively, the "Parties").

Recitals

A. This Agreement is authorized pursuant to Ariz. Rev. Statutes Section 11-951, *et. seq*.

B. The City has recently contacted the District regarding a proposal to construct a Bridge crossing of the District's Main Canal, at Lateral 24, in connection with the City's Capital Improvement Program #105660 (also sometimes referred to as "Rooks Road Bridge at BID").

C. The District owns, operates and maintains the Main Canal at Lateral 24 ("Canal") for the conveyance and delivery of irrigation water to lands located generally south of the Main Canal.

D. To ensure that the operational and maintenance requirements associated with the Main Canal are continued, coordination between the Parties of design, engineering, and construction plans for the Bridge crossing at the Main Canal, Lateral 24 ("Bridge Crossing") is appropriate. Moreover, the District's participation is also required in association with the establishment of easement agreements for roadway and utility purposes, in connection with the Bridge Crossing.

E. The City and the District mutually desire to enter into this Intergovernmental Agreement, which authorizes the Parties to provide design coordination, engineering plan review, easement establishment, and post-design services associated with the Bridge Crossing.

F. The City has reviewed the District's design and the engineering plans for the Bridge Crossing, and hereby approves of said plans.

G. The Parties are prepared to proceed with establishment of an easement for roadway and post-design services including, without limitation, construction observation by the City. The District will be responsible for the construction of the Bridge Crossing, utilizing the services of DBA Construction, an Arizona licensed contractor.

Agreement

In consideration of the mutual agreements and covenants set for the herein, Grantor and Grantee agree as follows:

1. The Recitals set forth above are incorporated herein by this reference.

2. All construction projects involving District facilities are subject to the written approval of the District's Board of Directors and such approval may be granted or denied solely within the discretion of the Board.

3. The Board has approved the Bridge Crossing construction project. Construction plans for the Bridge Crossing are attached hereto as **Exhibit "1"** and incorporated herein by reference.

4. The District will be responsible for the construction of the Bridge Crossing, including but not limited to construction observation and coordination; contract administration; right-of-way research; description, appraisals, and negotiations; review, coordination, and relocation of utilities affected by the Bridge Crossing; preparation, review and execution of easement agreements and/or transfer of property title, and any legal or administrative fees associated with the above items.

5. The District shall grant and convey unto the City a permanent easement for public roadway and utility purposes in substantially the form and format attached hereto as **Exhibit "2"**, and incorporated herein by reference.

6. In consideration for the District's construction of the Bridge Crossing, the City will remit payment to the District in the sum of THREE MILLION FIVE HUNDRED TWENTY-THREE THOUSAND, FOUR HUNDRED EIGHTEEN and 58/100 DOLLARS ($3,523,418.58) (the "Payment"), which shall constitute payment in full for the Bridge Crossing, as set forth in the District's Cost Estimate Letter dated November 13, 2024, attached hereto as **Exhibit "3"** and incorporated herein by this reference. The City has already paid to the District the sum of $198,908.00 in connection with construction of the Bridge Crossing.

7. Upon the District's receipt of the Payment, the District shall complete the Bridge Crossing with all reasonable diligence.

8. All work completed by the District in association with the construction of the Bridge Crossing shall be completed on a time and materials basis, and not later than the 15th of each month, the District shall provide to the City copies of all invoices paid by the District.

9. Upon completion of the Bridge Crossing, the City will reconcile the District's paid invoices against the Payment. The City will notify the District of any portion of the Payment that was not used ("Unused Payment"). The District will promptly reimburse to the City the Unused Payment.

10. The City shall not be responsible for any amounts in excess of those identified within **Exhibit "3"** (Cost Estimate Letter) without the City's prior written approval, which is and shall be subject to budget appropriation and the approval of the City Council in its legislative discretion. Notwithstanding the foregoing, failure to approve additional amounts shall not relieve the District of its obligations set forth herein to (1) complete construction of the Bridge Crossing and (2) grant an easement along the Bridge Crossing.

11. The District shall make every reasonable attempt to accommodate the City's Rooks Road Bridge at BID schedule. However, the District may require that the construction of the Bridge Crossing and/or other elements of the Rooks Road at BID be completed during dry-ups of the District's irrigation system. In any event, no liability shall accrue to the District for delays associated with dry-ups that are reasonably necessary to the District's operations.

12. Time is of the essence of this Easement.

13. The laws of the State of Arizona govern the interpretation, validity, performance and enforcement of this Agreement, except to the extent that the rights of any party are governed by the Canal Act or other federal law.

14. By their signatures below, the respective signors warrant that s/he has the authority to bind the identified entities to this Agreement, Additionally, the respective Parties hereto expressly warrants that it has complied with all procedures and any applicable laws or regulations regarding the notice and the holding of public hearings as prerequisites by approval of this Agreement and there is no legal or other impediment preventing such Party from performing the obligations herein.

15. This Agreement may be signed in any number of counterparts, and once so executed by all Parties each such counterpart will be deemed to be the original, but all counterparts together shall constitute but one complete and binding agreement.

The City desires that the District proceed to implement the Bridge Crossing and hereby indicates its agreement to the preceding terms as evidenced by the execution of this Agreement below.

[*signatures on following page*]

ACCEPTED:

BUCKEYE WATER CONSERVATION AND DRAINAGE DISTRICT, an irrigation and water conservation district

by:_____
Noel Carter
its: General Manager

ATTEST:

_____
Clerk of the Board

APPROVED AS TO FORM:

_____
Attorney for the District

ACCEPTED:

_____
CITY OF BUCKEYE,
an Arizona municipal corporation

_____
Dan Cotterman, City Manager

ATTEST:

_____
Lucinda J. Aja, City Clerk

APPROVED AS TO FORM:

_____
K. Scott McCoy, City Attorney

EXHIBIT “1”

TO

INTERGOVERNMENTAL AGREEMENT
BETWEEN THE
CITY OF BUCKEYE
AND THE
BUCKEYE WATER CONSERVATION AND DRAINAGE DISTRICT

CONSTRUCTION PLANS FOR BRIDGE CROSSING
(consisting of _____ pages)

BUCKEYE WATER CONSERVATION AND DRAINAGE DISTRICT

90% SUBMITTAL
SEPTEMBER 2024

ROOKS ROAD BRIDGE CROSSING
BWCDD MAIN CANAL & LATERAL 24 RELOCATION
PHASE 3
PROJECT PLANS
BUCKEYE, ARIZONA

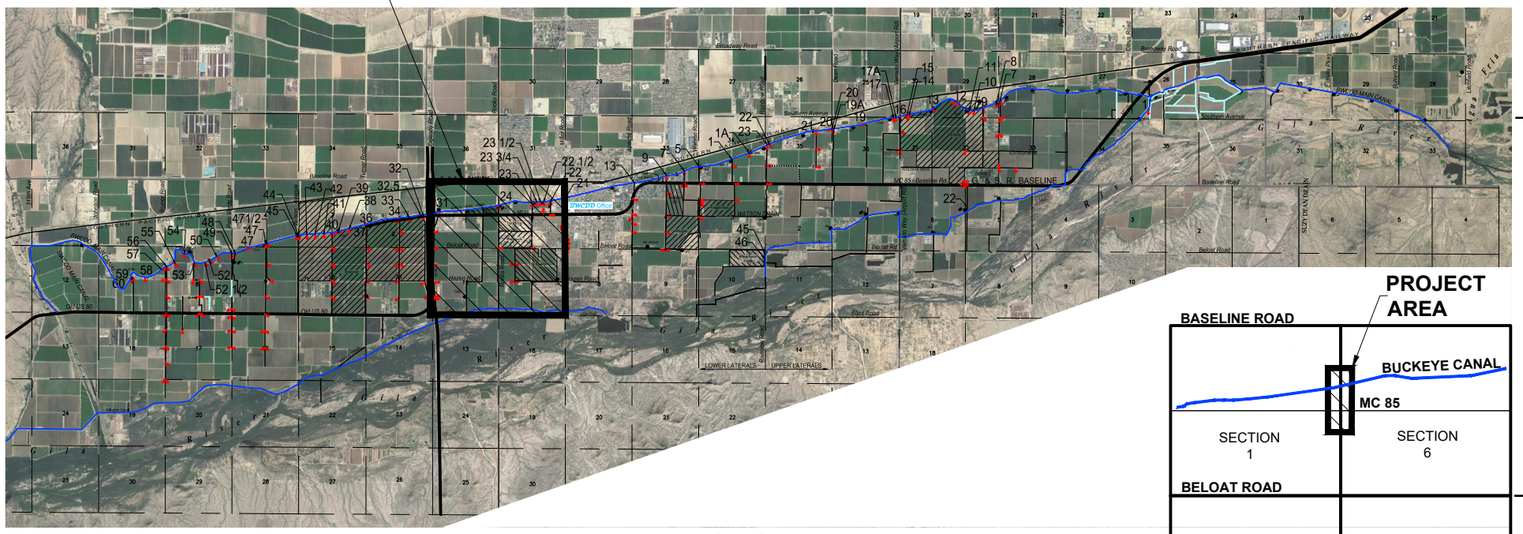

BUCKEYE WATER CONSERVATION AND DRAINAGE DISTRICT (BWCDD) GENERAL NOTES

1. WHERE DEDICATED EASEMENT IS NOT NOTED ON PROJECT PLANS, THE DISTRICT STILL MAINTAINS PRESCRIPTIVE RIGHTS TO OPERATE AND MAINTAIN IRRIGATION FACILITIES FOR THE PURPOSE OF IRRIGATION CONVEYANCE AND DELIVERY.

2. ALL CONSTRUCTION SHALL CONFORM TO THE MARICOPA ASSOCIATION OF GOVERNMENTS (MAG) SPECIFICATIONS AND STANDARD DETAILS AND LATEST REVISIONS UNLESS NOTED OTHERWISE ON PLANS.

3. CONTACT, NOTIFICATION AND COORDINATION WITH BUCKEYE WATER CONSERVATION AND DRAINAGE DISTRICT (BWCDD) SHALL BE MADE WITH BUCKEYE WATER CONSERVATION AND DRAINAGE DISTRICT'S ADMINISTRATION OFFICE AT (623) 386-2196.

4. ALL SHOP DRAWINGS WILL REQUIRE BUCKEYE WATER CONSERVATION AND DRAINAGE DISTRICT'S APPROVAL BEFORE CONSTRUCTION CAN BEGIN.

5. ALL IRRIGATION STRUCTURES SHALL BE MONOLITHIC CAST-IN-PLACE REINFORCED CONCRETE UNLESS OTHERWISE APPROVED BY ENGINEER OR AS SHOWN ON PLANS AND SHALL HAVE A WALL THICKNESS OF EIGHT INCHES UNLESS NOTED OTHERWISE.

6. ALL COMPACTION AND BACKFILL SHALL CONFORM TO THE MAG STANDARD SPECIFICATIONS, DETAILS, AND LATEST REVISIONS.

7. THE CONTRACTOR IS RESPONSIBLE FOR THE FINAL GRADE ADJUSTMENTS OF ALL IRRIGATION STRUCTURES AND MANHOLES TO THE SATISFACTION OF BWCDD.

8. THE CONTRACTOR IS RESPONSIBLE FOR OBTAINING ALL NECESSARY BWCDD PERMITS, RIGHTS-OF-ENTRY, **NOTICES TO PROCEED**, AND APPROVALS PRIOR TO CONSTRUCTION.

9. THE CONTRACTOR SHALL NOTIFY BWCDD IN WRITING AT LEAST 72 HOURS IN ADVANCE OF ANY CONSTRUCTION.

10. THE CONTRACTOR SHALL CONTACT AND COORDINATE WITH BWCDD FOR THE "DRY-UP" OF EXISTING IRRIGATION FACILITIES PRIOR TO THE BEGINNING OF CONSTRUCTION. IT WILL BE BWCDD'S SOLE DETERMINATION OF THE TIME AND DURATION OF THIS "DRY-UP" PERIOD.

11. THE CONTRACTOR SHALL CONTACT AND COORDINATE WITH BWCDD FOR THE REMOVAL OF EXISTING IRRIGATION FACILITIES PRIOR TO THE BEGINNING OF CONSTRUCTION.

12. THE CONTRACTOR IS RESPONSIBLE FOR CONTACTING AND COORDINATING WITH BWCDD FOR THE INSPECTION OF ALL CONSTRUCTION WORK. **NOTICE MUST BE GIVEN TO BWCDD OR BWCDD'S AGENT A MINIMUM OF 48 HOURS PRIOR TO INSTALLATION OF ANY WORK REQUIRING FIELD OBSERVATION/INSPECTION OR APPROVALS TO PROCEED**.

13. ALL CONSTRUCTION WORK IS SUBJECT TO BWCDD'S INSPECTION AND APPROVAL. CONSTRUCTION WORK COMPLETED WITHOUT INSPECTION BY BWCDD SHALL BE SUBJECT TO EXPOSURE AT THE CONTRACTOR'S EXPENSE.

14. AS-BUILT PLANS AND CERTIFICATIONS SHALL BE PROVIDED IMMEDIATELY UPON COMPLETION OF CONSTRUCTION TO BWCDD BY THE CONTRACTOR PERFORMING THE INSTALLATION OF BWCDD FACILITIES. AS-BUILT PLANS SHALL FEATURE BOTH HORIZONTAL AND VERTICAL AS-BUILT INFORMATION FOR ANY **NEW** UTILITIES INSTALLED WITHIN THE BWCDD EASEMENT. **BWCDD DOES NOT REQUIRE THE AS-BUILT DRAWINGS TO REFLECT THE AS-BUILT INVERT OF EXISTING UTILITIES THAT CROSS BWCDD'S FACILITIES, HOWEVER, THE 3' MINIMUM CLEARANCE SEPARATION BETWEEN THE EXISTING UTILITY AND BWCDD'S FACILITY WILL NEED TO BE AS-BUILT**. FINAL AS-BUILTS ARE TO BE PROVIDED TO BWCDD IN ALL OF THE FOLLOWING FORMS: ORIGINAL MYLAR SET (1), COPIES OF MYLAR SET (2), DISC WITH COPY OF SCANNED MYLAR SET (1), AND 11x17 COPIES OF MYLAR SET (3).

15. AS-BUILT PLANS OF BWCDD'S FACILITIES SHALL BE REFLECTED ON THE CORRESPONDING AS-BUILT PAVING AND WATER IMPROVEMENT PLANS WHERE APPLICABLE.

16. IF A CONFLICT IN NOTES ON THIS DESIGN PLAN IS IDENTIFIED, THE BWCDD GENERAL NOTES SHALL SUPERSEDE ANY OTHER NOTES.

17. CONTRACTOR SHALL PURCHASE AND INSTALL BWCDD'S CUSTOM DETECTABLE UNDERGROUND WARNING TAPE AT THE SPECIFIED DEPTH FOR ALL LENGTHS OF BURIED BWCDD FACILITIES. DETECTABLE UNDERGROUND WARNING TAPE SHALL BE PRESCO (PART # D6105B1549), REEF INDUSTRIES TERRA TAPE, OR SETON CUSTOM UNDERGROUND WARNING TAPES, THE COLOR BLUE, 6" WIDE AND READ AS FOLLOWS; CAUTION BWCDD IRRIGATION FACILITIES BURIED BELOW CONTACT BWCDD AT 623-386-2196. CONTACT BWCDD FOR ORDERING AND INSTALLATION INFORMATION.

18. **CONTRACTOR SHALL BE REQUIRED TO HYDRO TEST ALL NEW BWCDD FACILITIES ACCORDING TO BWCDD STANDARD TESTING REQUIREMENTS AND SPECIFICATIONS**.

19. EXISTING UTILITIES AS SHOWN ON THE DRAWINGS ARE IN ACCORDANCE WITH THE AVAILABLE RECORDS AT THE TIME OF DESIGN. CONTRACTOR IS RESPONSIBLE FOR VERIFYING LOCATIONS OF UTILITIES 14 DAYS PRIOR TO CONSTRUCTION OR REMOVALS OF EXISTING FACILITIES AND NOTIFY ENGINEER OF ANY DISCREPANCIES OR DIFFERENCES. CONTACT ARIZONA BLUE STAKE CENTER TWO WORKING DAYS PRIOR TO CONSTRUCTION AT (800) 782-5348 OR (602) 263-1100 TO LOCATE AND FLAG UNDERGROUND FACILITIES.

20. CONTRACTOR SHALL PURCHASE AND ARRANGE FOR DELIVERY OF ALL STAFF GAUGES, STEEL STEPS, STAFF GAUGE EXTENSIONS, AND OTHER MATERIALS IDENTIFIED FOR INSTALLATION BY BWCDD. CONTRACTOR SHALL CONTACT BWCDD PRIOR TO DELIVERY BY CALLING (623) 386-2196.

21. ITEMS DESIGNATED FOR SALVAGE SHALL BE DELIVERED TO BWCDD DISTRICT OFFICE LOCATED AT 205 EAST ROOSEVELT AVENUE; BUCKEYE, ARIZONA 85326. CONTACT BWCDD AT 623-386-2196 TO COORDINATE DELIVERY.

22. WHERE CROSSING UNDER EXISTING BWCDD OPEN CHANNELS, THE BWCDD PREFERRED METHOD OF NEW UTILITY INSTALLATION IS BORE AND JACK, WHERE INSTALLATION IS PERFORMED USING OPEN CUT METHOD, COMPLETE REPLACEMENT OF THE DITCH TO DISTRICT STANDARD IS REQUIRED. ALL CROSSINGS WILL REQUIRE AN ENCROACHMENT PERMIT AND INSPECTION BY BWCDD.

23. WHERE NEW UTILITIES CROSS UNDER EXISTING BWCDD IRRIGATION PIPES, AND WHERE MECHANICAL COMPACTION OF THE BACKFILL IS NOT ACHIEVABLE, ONE SACK SLURRY BACKFILL SHALL BE REQUIRED TO THE SPRINGLINE OF THE EXISTING BWCDD PIPE, AS DIRECTED BY THE BWCDD INSPECTOR.

24. WHERE SAW CUTTING INTO AN EXISTING PANEL FOR HAND-PLACED TRANSITION, CONTRACTOR SHALL REPLACE A MINIMUM OF 10' OF LINING OR TO THE NEXT CLEAN JOINT, MAXIMUM 20'.

25. ALL BWCDD FACILITIES SHALL REMAIN IN SERVICE THROUGHOUT THE DURATION OF ALL CONSTRUCTION ACTIVITY EXCEPT DURING DRY-UP PERIODS APPROVED BY BWCDD.

26. MAINTAIN A MINIMUM OF 3' OF CLEARANCE BETWEEN EXISTING BWCDD FACILITIES AND ANY PROPOSED UTILITIES UNLESS OTHERWISE SHOWN.

27. THE CONTRACTOR SHALL MAINTAIN IRRIGATION DELIVERIES TO ALL EXISTING AND ACTIVE IRRIGATION SYSTEMS DURING CONSTRUCTION UNLESS AUTHORIZED BY THE OWNER TO DISCONTINUE THESE DELIVERIES.

28. LOCATIONS FOR FACILITIES WHICH ARE NOT SPECIFICALLY LOCATED WITH ACTUAL VERTICAL AND HORIZONTAL CONTROL SHOULD BE CONSIDERED ONLY APPROXIMATE PER THE BEST AVAILABLE INFORMATION.

29. UNLESS OTHERWISE NOTED ON THE PLANS, ALL EXISTING ITEMS INCLUDING, BUT NOT LIMITED TO, GROUNDWATER WELLS, TREES, OTHER LANDSCAPING, SIGNS, FENCES, ETC. SHALL BE PROTECTED BY THE CONTRACTOR; AND IF SUCH ITEMS ARE DAMAGED, CONTRACTOR SHALL REPLACE THE ITEMS AT NO COST TO BWCDD TO THE SAME OR BETTER CONDITION THAN THEY WERE BEFORE.

30. WHERE FACILITIES ARE CALLED OUT TO REMAIN IN PLACE THE CONTRACTOR SHALL TAKE ALL PRECAUTIONARY MEASURES TO PROTECT FACILITIES DURING CONSTRUCTION. FACILITIES SHOULD NOT BE DISTURBED UNLESS IT IS SHOWN ON THE DRAWINGS THAT THE CONTRACTOR IS TO MAKE IMPROVEMENTS.

31. CONTRACTOR SHALL FIELD VERIFY EXISTING CONDITIONS PRIOR TO THE COMMENCEMENT OF CONSTRUCTION.

32. PROTECTING OF EXISTING INSTALLATIONS:

    A. IN PERFORMING WORK IN THE VICINITY OF EXISTING INSTALLATIONS, THE CONTRACTOR SHALL TAKE ALL THE NECESSARY PRECAUTIONS TO SAFEGUARD EXISTING INSTALLATION WHICH ARE TO REMAIN IN PLACE. THE CONTRACTOR SHALL OBTAIN THE LOCATION OF CONDUIT, PIPE, CABLE, GROUND MAT, AND OTHER BURIED INFRASTRUCTURE ITEMS PRIOR TO PERFORMING ANY EXCAVATIONS NEARING THE EXISTING INSTALLATIONS AND SHALL USE PROPER METHODS FOR PROTECTION DURING EXCAVATION, INSTALLATION, AND BACKFILLING OPERATIONS. THE CONTRACTOR SHALL PROTECT ADJACENT INSTALLATIONS WHEN INSTALLING EQUIPMENT AND MATERIALS.

    B. ALL PROTECTIVE MEASURES AND INSTALLATIONS SHALL BE ARRANGED SO AS TO PERMIT OPERATION OF THE EXISTING EQUIPMENT AND FACILITIES BY THE OWNER WHILE WORK UNDER THIS CONTRACT IS IN PROGRESS. THE CONTRACTOR SHALL REMOVE ALL PROTECTIVE MEASURES AND INSTALLATIONS PROVIDED BY HIM/HER AFTER THEY HAVE SERVED THEIR PURPOSE. THE MATERIALS FURNISHED BY THE CONTRACTOR TO PROVIDE PROTECTION SHALL REMAIN THE PROPERTY OF THE CONTRACTOR.

    C. THE CONTRACTOR SHALL BE RESPONSIBLE, FOR REPAIR, AT HIS/HER OWN EXPENSE, ANY DAMAGES TO EXISTING INSTALLATIONS DUE TO THE CONTRACTOR'S OPERATIONS OR HIS FAILURE TO PROVIDE PROPER PROTECTION; AND IN THE OPINION OF BWCDD, ANY SUCH DAMAGES INCURRED MAY BE REPAIRED BY THE OWNER, AND THE CONTRACTOR WILL BE BACK CHARGED FOR THE REPAIR COSTS TO SAID EXISTING INSTALLATIONS THEREOF.

SHEET INDEX

DWG ID	SHEET NO.	DESCRIPTION
G-1	1	COVER AND LOCATION MAPS
G-2	2	DISTRICT NOTES AND SHEET INDEX
G-3	3	CONSTRUCTION NOTES
G-4	4	STRUCTURAL NOTES
G-5	5	ABBREVIATIONS, LEGEND, AND DRAWING DESIGNATION
G-6	6	KEY PLAN, SURVEY CONTROL, AND QUANTITIES
G-7	7	GEOMETRIC ALIGNMENT AND COORDINATE TABLE
P-1	8	BWCDD MAIN PLAN AND PROFILE
SP-1	9	BRIDGE SITE PLAN
SP-2	10	BRIDGE CANAL SECTION
SP-3	11	RETAINING WALL
BD-1	12	BRIDGE NOTES
BD-2	13	DRILLED SHAFT PLAN DETAILS
BD-3	14	FOUNDATION DETAILS
BD-4	15	ABUTMENT 1 (SOUTH) PLAN AND ELEVATION
BD-5	16	ABUTMENT 2 (NORTH) PLAN AND ELEVATION
BD-6	17	ABUTMENT DETAILS
BD-7	18	BRIDGE GIRDER TYPE 1 DETAILS
BD-8	19	BRIDGE GIRDER TYPE 2 DETAILS
BD-9	20	TRANSVERSE ANCHOR DETAILS
BD-10	21	ROAD BRIDGE DECK SECTION
BD-11	22	ROAD BRIDGE DECK SECTION
BD-12	23	ROAD BRIDGE ADOT RAIL DETAIL
S-1	24	RETAINING WALL DETAILS
D-1	25	STANDARD DETAILS

Contact Arizona 811 at least two full working days before you begin excavation

ARIZONA811 BLUE STAKE, INC.

Call 811 or click Arizona811.com

REV.	DATE	REVISION DESCRIPTION	BY

GCE Inc.
GEORGE CAIRO ENGINEERING, INC.
STAPLEY CENTER
1630 S. STAPLEY DR., SUITE 117
MESA, ARIZONA 85204
WWW.GCAIROINC.COM

NOT FOR CONSTRUCTION 90% SUBMITTAL 09/13/24

DESIGNED BY:	B. JONES
DRAWN BY:	A. SOTO
APPROVED BY:	G. CAIRO
PROJECT No.:	BWC-43
PLOT DATE:	SEPT, 2024

BWCDD Buckeye Water Conservation & Drainage District

BUCKEYE WATER CONSERVATION AND DRAINAGE DISTRICT
205 EAST ROOSEVELT AVENUE
BUCKEYE, ARIZONA 85326
(623) 386-2196

ROOKS ROAD BRIDGE CROSSING BWCDD MAIN CANAL & LATERAL 24 RELOCATION PHASE 3

BUCKEYE, ARIZONA

DISTRICT NOTES AND SHEET INDEX

G - 2

BWCDD PROJECT No.: BWC-2149

BWCDD MAIN CANAL

GCE PROJECT No.: BWC 383

Z:\GCE Projects\BWC-43\dwg\PHASE 3\01_BWC-43_Phase 3_G.dwg|nesb 09/13/24 - 3:23pm

REUSE OF DOCUMENT: THESE PLANS & SPECIFICATIONS, AND THE IDEAS & DESIGNS INCORPORATED HEREIN, AS AN INSTRUMENT OF PROFESSIONAL SERVICE, ARE THE PROPERTY OF GCE, INC., AND ARE NOT TO BE USED, IN WHOLE OR IN PART, FOR ANY OTHER PROJECT WITHOUT THE WRITTEN AUTHORIZATION AND CONSENT OF GCE, INC. ©

CONSTRUCTION NOTES

GENERAL

1. THE CONTRACTOR SHALL OBTAIN ALL PERMITS THAT ARE REQUIRED BY ALL LEVELS OF REGULATORY AGENCIES PRIOR TO CONSTRUCTION.

2. THE CONTRACTOR SHALL COMPLY WITH ALL SAFETY REQUIREMENTS ESTABLISHED BY ALL LEVELS OF REGULATORY AGENCIES DURING THE ENTIRE PERIOD OF THE CONSTRUCTION.

3. THE CONTRACTOR SHALL OBTAIN THE APPROVAL OF THE TRAFFIC CONTROL PLANS FROM GOVERNING AUTHORITIES AND ENFORCE THE APPROVED TRAFFIC CONTROL PLAN DURING THE ENTIRE PERIOD OF CONSTRUCTION.

4. ANY WORK PERFORMED WITHOUT THE APPROVAL OF THE DISTRICT AND/OR ALL WORK AND MATERIAL NOT IN CONFORMANCE WITH THE PLANS AND SPECIFICATIONS IS SUBJECT TO REMOVAL AND REPLACEMENT AT THE CONTRACTOR'S EXPENSE.

5. AN APPROVED SET OF PLANS SHALL BE MAINTAINED AT THE JOB SITE AT ALL TIMES THAT WORK IS IN PROGRESS. DEVIATION FROM THE PLANS SHALL NOT BE ALLOWED WITHOUT THE DISTRICT'S APPROVAL.

6. IT IS THE CONTRACTOR'S RESPONSIBILITY TO MANAGE ROADWAY DUST, AND TAKE WHATEVER MEASURES ARE NECESSARY TO INSURE THAT ALL ROADS ARE MAINTAINED IN A CLEAN, MUD- AND DUST-FREE CONDITION AT ALL TIMES.

PIPING AND GATES

1. ALL EARTHWORK SHALL BE PERFORMED IN ACCORDANCE WITH MAG STANDARD SPECIFICATIONS SECTION 200.

2. THE CONTRACTOR SHALL UNCOVER ALL EXISTING IRRIGATION LINES BEING TIED INTO, TO VERIFY THEIR LOCATION. THE CONTRACTOR SHALL LOCATE OR HAVE LOCATED ALL EXISTING UNDERGROUND UTILITIES (ELECTRIC, TELEPHONE, PIPELINES, ETC.) AND STRUCTURES IN ADVANCE OF CONSTRUCTION AND SHALL ELIMINATE ALL CONFLICTS PRIOR TO THE START OF CONSTRUCTION.

3. TRENCH EXCAVATION, BACKFILL AND COMPACTION SHALL BE PERFORMED IN ACCORDANCE WITH MAG STANDARD SPECIFICATION SECTION 601, AND TRENCH DETAILS AS SHOWN ON THE DRAWINGS.

4. ALL REINFORCED CONCRETE PIPES SHALL BE CLASS V UNLESS OTHERWISE INDICATED ON THE PLANS AND SHALL CONFORM TO MAG STANDARD SPECIFICATIONS SECTION 735. RUBBER GASKETS FOR CONCRETE PIPE SHALL CONFORM TO MAG STANDARD SPECIFICATIONS SECTION 765.

5. DISPOSAL AND STOCKPILING OF EXCESS MATERIAL WITHIN THE PROJECT AREA SHALL BE DONE AT THE DIRECTION OF THE DISTRICT.

6. ALL MATERIAL DESIGNATED FOR SALVAGE SHALL BE TRANSPORTED TO THE DISTRICT OFFICE/EQUIPMENT YARD OR TO THE SPECIFIED LOCATION AS DIRECTED BY THE DISTRICT DURING EXECUTION OF THE WORK. BWCDD DISTRICT OFFICE LOCATED AT 205 EAST ROOSEVELT AVENUE; BUCKEYE, ARIZONA 85326. CONTACT BWCDD AT 623-386-2196 TO COORDINATE DELIVERY.

7. ALL FABRICATED SLIDE GATES SHALL BE FLATBACK TYPE, SELF-CONTAINED, FLUSH BOTTOM SEAL, THREE SIDED "J" SEAL AND 316 STAINLESS STEEL STEM, RAILS AND YOKE, SUITABLE FOR HEADWALL MOUNTING. LIFT NUTS SHALL BE BRONZE. THE GATE SHALL BE FURNISHED WITH SIDE CRANK HANDLE AND STEM COVER LIFTING EQUIPMENT WITH 3:1 MINIMUM SEALED GEAR RATIO AND 2 INCH SQUARE OPERATING NUT PER HYDROGATE CPS4 OR APPROVED EQUAL. ALL GATES SHALL BE FACTORY COATED PER MANUFACTURER'S RECOMMENDATION. THE GATES SHALL CONFORM TO HYDROGATE FABRICATED SELF-CONTAINED SLIDE GATE, FRESNO SERIES 8200 OR AN APPROVED EQUAL.

8. ALL CANAL GATES SHALL BE FLATBACK TYPE, WITH GALVANIZED STEEL RAILS AND YOKE, SUITABLE FOR HEADWALL MOUNTING. LIFT NUTS SHALL BE BRONZE. THE GATE SHALL BE FURNISHED WITH A HANDWHEEL OPERATOR. ALL GATES SHALL BE FACTORY COATED PER MANUFACTURER'S RECOMMENDATION. THE GATES SHALL CONFORM TO FRESNO SERIES 6400 MODEL 20-10C SLIDE GATE OR AN APPROVED EQUAL.

9. A MANUFACTURER'S REPRESENTATIVE SHALL BE ON SITE AT ALL TIMES DURING FABRICATED, CANAL, AND AUTOMATED GATES INSTALLATION, TESTING, AND INSPECTION. COORDINATION AND COST ASSOCIATED WITH INSTALLATION AND COMMISSIONING OF GATES SHALL BE THE RESPONSIBILITY OF THE CONTRACTOR. FINAL ACCEPTANCE OF GATE INSTALLATION SHALL REQUIRE BOTH ENGINEER AND MANUFACTURER'S REPRESENTATIVE APPROVAL, IN WRITING.

PAINTING AND COATING

1. EXPOSED METALS: INCLUDING PIPE, FITTINGS, VALVES, STRAP ANCHORS, VALVE AND PIPE SUPPORTS, AND SIMILAR ITEMS NOT OTHERWISE COVERED, SHALL BE PAINTED AS FOLLOWS:

   A. EXPOSED DUCTILE IRON SURFACES THAT HAVE BEEN COATED WITH COALTAR VARNISH SHALL BE GIVEN TWO (2) COATS OF TNEMEC N69 HI-BUILD EXPOLINE II PRIMER (SAFETY YELLOW) APPLIED AT A RATE THAT WILL PROVIDE A MINIMUM DRY FILM THICKNESS OF FOUR (4) TO SIX (6) MILS. FOLLOWED BY ONE (1) TOPCOAT OF TNEMEC 73 ENDURA-SHIELD APPLIED AT A RATE THAT WILL PROVIDE A MINIMUM DRY FILM THICKNESS OF TWO (2) TO FIVE (5) MILS.

   B. EXPOSED GALVANIZED STEEL SURFACES SHALL BE SOLVENT WASHED FOLLOWED BY TWO (2) COATS OF TNEMEC N69 HI-BUILD EXPOLINE II PRIMER (SAFETY YELLOW) APPLIED AT A RATE THAT WILL PROVIDE A MINIMUM DRY FILM THICKNESS OF FOUR (4) TO SIX (6) MILS. FOLLOWED BY ONE (1) TOPCOAT OF TNEMEC 73 ENDURA-SHIELD APPLIED AT A RATE THAT WILL PROVIDE A MINIMUM DRY FILM THICKNESS OF TWO (2) TO FIVE (5) MILS.

   C. BARE FERROUS METAL SURFACES SHALL BE GIVEN TWO (2) COATS OF TNEMEC N69 HI-BUILD EXPOLINE II PRIMER (SAFETY YELLOW) APPLIED AT A RATE THAT WILL PROVIDE A MINIMUM DRY FILM THICKNESS OF FOUR (4) TO SIX (6) MILS. FOLLOWED BY ONE (1) TOPCOAT OF TNEMEC 73 ENDURA-SHIELD APPLIED AT A RATE THAT WILL PROVIDE A MINIMUM DRY FILM THICKNESS OF TWO (2) TO FIVE (5) MILS.

2. **NON EXPOSED METALS:**

   A. BEFORE BACKFILLING, ALL COUPLINGS, BOLTS, NUTS, ANCHOR BOLTS AND RODS, AND ALL NON-EXPOSED STEEL SHALL RECEIVE ONE (1) BRUSH COAT OF TNEMEC 46H-413 HI-BUILD TNEME-TAR COAL TAR EPOXY APPLIED AT A RATE THAT WILL PROVIDE A MINIMUM DRY FILM THICKNESS OF NOT LESS THAN TWENTY (20) MILS. THE COATING SHALL BE WITHOUT FLAW WHEN COVERED WITH BACKFILL.

   B. IN ADDITION TO COATING AS REQUIRED UNDER 2.A ABOVE, ALL BURIED DUCTILE IRON PIPE SHALL BE WRAPPED WITH POLYWRAP CONFORMING TO MAG STANDARD SPECIFICATIONS SECTION 610.5.

   C. PERMATEX ANTI-SEIZE LUBRICANT, LOCTITE HEAVY-DUTY ANTI-SEIZE LUBRICANT, OR SAF-T-EZE REGULAR GRADE ANTI-SEIZE SHALL BE APPLIED TO ALL MANHOLE BOLT THREADS PRIOR TO SECURING LIDS PER MANUFACTURER SPECIFICATIONS.

3. NO MEASUREMENT OR SEPARATE PAYMENT WILL BE MADE FOR PAINTING OR COATING ITEMS AS SUCH; THE COST THEREOF SHALL BE INCLUDED IN THE COST OF THE ITEM.

Contact Arizona 811 at least two full working days before you begin excavation
ARIZONA811 BLUE STAKE, INC.
Call 811 or click Arizona811.com

REV.	DATE	REVISION DESCRIPTION	BY

GCE Inc.
GEORGE CAIRO ENGINEERING, INC.
STAPLEY CENTER
1630 S. STAPLEY DR., SUITE 117
MESA, ARIZONA 85204
WWW.GCAIROINC.COM

NOT FOR CONSTRUCTION
90% SUBMITTAL
09/13/24

DESIGNED BY:	B. JONES
DRAWN BY:	A. SOTO
APPROVED BY:	G. CAIRO
PROJECT No.:	BWC-43
PLOT DATE:	SEPT, 2024

BWCDD
BUCKEYE WATER CONSERVATION AND DRAINAGE DISTRICT
205 EAST ROOSEVELT AVENUE
BUCKEYE, ARIZONA 85326
(623) 386-2196

ROOKS ROAD BRIDGE CROSSING BWCDD MAIN CANAL & LATERAL 24 RELOCATION
PHASE 3
BUCKEYE, ARIZONA

CONSTRUCTION NOTES

G - 3

REUSE OF DOCUMENT: THESE PLANS & SPECIFICATIONS, AND THE IDEAS & DESIGNS INCORPORATED HEREIN, AS AN INSTRUMENT OF PROFESSIONAL SERVICE, ARE THE PROPERTY OF GCE, INC., AND ARE NOT TO BE USED, IN WHOLE OR IN PART, FOR ANY OTHER PROJECT WITHOUT THE WRITTEN AUTHORIZATION AND CONSENT OF GCE, INC. ©

Z:\GCE Projects\BWC-43\dwg\PHASE 3\01_BWC-43_Phase 3_G.dwg|jonesb 09/13/24 - 3:23pm

STRUCTURAL NOTES

GENERAL:

1. ALL MATERIALS AND WORKMANSHIP SHALL CONFORM TO THE LATEST ADOPTED EDITION (INCLUDING REVISIONS) OF THE "UNIFORM STANDARD SPECIFICATIONS FOR PUBLIC WORKS CONSTRUCTION" SPONSORED BY THE MARICOPA ASSOCIATION OF GOVERNMENTS (M.A.G.), AND AS ADDITIONALLY REQUIRED BY THE PROJECT PLANS AND SPECIAL PROVISIONS.
2. FEATURES OF STRUCTURE CONSTRUCTION NOT FULLY SHOWN SHALL BE OF THE SAME CHARACTER AS SHOWN FOR SIMILAR CONDITIONS.
3. BEFORE COMMENCING WORK, THE CONTRACTOR SHALL EXAMINE ALL DRAWINGS AND SHALL NOTIFY THE ENGINEER OF ANY DISCREPANCIES. DIMENSIONS OF AND DIMENSIONS WHICH LOCATE EXISTING FEATURES SHALL BE VERIFIED BEFORE COMMENCING WORK.
4. WHERE DIMENSIONS ARE SHOWN FOR EXISTING STRUCTURES THEY ARE APPROXIMATE AND FOR REFERENCE ONLY. THE CONTRACTOR SHALL FIELD VERIFY ALL CONTROLLING DIMENSIONS PRIOR TO ORDERING OR FABRICATING ANY MATERIAL. ANY VARIATIONS BETWEEN EXISTING DIMENSIONS AND ELEVATIONS AND THE PLANS SHALL BE REPORTED TO THE ENGINEER.
5. NO STRUCTURAL MEMBERS SHALL BE CUT FOR PIPES, DUCTS, ETC. UNLESS SPECIFICALLY DETAILED OR APPROVED IN WRITING BY THE ENGINEER PRIOR TO CONSTRUCTION.
6. FOR ABBREVIATIONS NOT LISTED, SEE "ABBREVIATIONS FOR USE ON DRAWINGS AND TEXT", PUBLISHED BY THE AMERICAN NATIONAL STANDARDS INSTITUTE INC. (ANSI).
7. CONSTRUCTION, SHORING AND BRACING OF FORMWORK SHALL BE IN ACCORDANCE WITH ACI 301 "SPECIFICATIONS FOR STRUCTURAL CONCRETE" AND ACI 347 "GUIDE TO FORMWORK FOR CONCRETE". THE CONTRACTOR SHALL BE RESPONSIBLE FOR THE DESIGN AND CONSTRUCTION OF ALL FORMWORK AND SHORING.
8. DESIGN LOADS:
   WALKWAYS AND PLATFORMS = 150 PSF

CONCRETE:

1. EXCEPT WHERE SPECIFICALLY INDICATED OTHERWISE, ALL CAST-IN-PLACE STRUCTURAL CONCRETE SHALL BE CLASS AA (MINIMUM 28 DAY COMPRESSIVE STRENGTH OF 4000 PSI) CONFORMING TO SECTIONS 725 AND 726 OF THE M.A.G. STANDARD SPECIFICATIONS AND SPECIAL PROVISIONS WHEN APPLICABLE. CONCRETE MIXTURE SHALL INCLUDE FIBERMESH (SIKA FIBERMESH 150, FORTA-FERRO ECONO-NET, OR NYCON MULTIMESH WITH A DOSAGE RATE OF 1.5 LBS PER CUBIC YARD), WATER REDUCING ADMIXTURE (WRA), AIR ENTRAINMENT, AND FLYASH AT 15% OF CEMENTITIOUS CONTENT. FLYASH FACTOR SHALL BE 1.2 POUNDS OF FLYASH FOR EVERY POUND OF CEMENT DEDUCTED.
2. EXCEPT WHERE SPECIFICALLY INDICATED OTHERWISE, ALL CAST-IN-PLACE CONCRETE LINING SHALL BE CLASS A (MINIMUM 28 DAY COMPRESSIVE STRENGTH OF 3000 PSI) CONFORMING TO SECTIONS 725 AND 726 OF THE M.A.G STANDARD SPECIFICATIONS AND SPECIAL PROVISIONS WHEN APPLICABLE. CONCRETE MIXTURE SHALL INCLUDE FIBERMESH (SIKA FIBERMESH 650, FORTA-FERRO, OR NYCON XL WITH A DOSAGE RATE OF 3.0 LBS PER CUBIC YARD). ALL CONCRETE AGGREGATE SHALL BE NO GREATER THAT 3/4" DIAMETER.
3. EXCEPT WHERE SPECIFICALLY INDICATED OTHERWISE ALL SHOTCRETE LINING SHALL BE CLASS A (MINIMUM 28 DAY COMPRESSIVE STRENGTH OF 3000 PSI) CONFORMING TO SECTIONS 725 AND 726 OF THE M.A.G STANDARD SPECIFICATIONS AND SPECIAL PROVISIONS WHEN APPLICABLE. CONCRETE MIXTURE SHALL INCLUDE FIBERMESH (SIKA FIBERMESH 650, FORTA-FERRO, OR NYCON XL WITH A DOSAGE RATE OF 3.0 LBS PER CUBIC YARD). ALL CONCRETE AGGREGATE SHALL BE NO GREATER THAT 3/8" DIAMETER. SHOTCRETE MAY BE SALT RIVER PROJECT (SRP) STOCK CODE NUMBER 0000234 WITH 3 POUNDS PER CUBIC YARD FIBROUS ADMIXTURE. MINIMUM SHOTCRETE SLOPE THICKNESS SHALL BE 3 INCHES ON THE MAINLINE CANAL SIDE SLOPES, 4 INCHES FOR BOTTOM, AND 4 INCHES ON TRANSITIONS.
4. REINFORCING STEEL SHALL CONFORM TO ASTM A615, GRADE 60. REINFORCING TO BE WELDED SHALL CONFORM TO ASTM A706 GRADE 60. FABRICATION AND PLACEMENT OF REINFORCING STEEL SHALL BE IN ACCORDANCE WITH CRSI MSP-1 "MANUAL OF STANDARD PRACTICE" AND ACI 301 "SPECIFICATIONS FOR STRUCTURAL CONCRETE FOR BUILDINGS".

   UNLESS OTHERWISE NOTED ALL REINFORCING BAR SPLICES SHALL BE:

	#3	#4	#5	#6	#7	#8	#9
TOP BAR*	1'-4"	1'-8"	2'-0"	2'-5"	3'-6"	4'-0"	4'-11"
OTHER BAR	1'-4"	1'-4"	1'-7"	1'-11"	2'-9"	3'-1"	3'-10"

   * TOP BARS SHALL BE DEFINED AS ANY HORIZONTAL BARS PLACED SUCH THAT MORE THAN 12" OF FRESH CONCRETE IS CAST IN THE MEMBER BELOW THE BAR IN ANY SINGLE POUR. HORIZONTAL WALL BARS ARE CONSIDERED TOP BARS.

5. MINIMUM CLEARANCE FOR REINFORCEMENT BARS, UNLESS SHOWN OTHERWISE, SHALL BE AS FOLLOWS:

   3" WHERE CONCRETE IS PLACED AGAINST EARTH
   2" WHERE CONCRETE IS PLACED AGAINST FORMS
   1" WHERE CONCRETE IS PLACED AGAINST PIPE

6. ALL EMBEDDED ITEMS SHALL BE POSITIVELY SECURED IN PLACE BEFORE PLACING CONCRETE. ALL EMBEDDED BOLTS SHALL BE STAINLESS STEEL.
7. ROUGHEN AND CLEAN ALL CONSTRUCTION JOINTS IN WALLS AND SLABS AS SPECIFIED PRIOR TO PLACING ADJACENT CONCRETE.
8. CHAMFER ALL EXPOSED CONCRETE EDGES 3/4" TYPICAL, TO 6" BELOW FINISHED GRADE UNLESS SHOWN OTHERWISE.
9. STRUCTURAL POURS SHALL BE PLACED AT (4') MAXIMUM VERTICAL LIFTS VIBRATED THROUGH AND THROUGH AS SPECIFIED PER M.A.G. SECTION 505.
10. ALL ANCHOR BOLTS SHALL BE STAINLESS STEEL DRILLED ADHESIVE ANCHORS HILTI HIT HY-200 MAX, ANCHORING SYSTEM OR EQUAL.

STRUCTURAL STEEL AND STEEL FABRICATIONS:

1. ALL STRUCTURAL STEEL SHALL CONFORM TO ASTM A-36 UNLESS SHOWN OTHERWISE. SQUARE OR RECTANGULAR STEEL TUBING SHALL CONFORM TO ASTM A-500 GRADE B. STEEL PIPE SHALL CONFORM TO ASTM A-501; OR A53 TYPES E OR S, GRADE B
2. ALL CONNECTION BOLTS SHALL BE HIGH STRENGTH BOLTS CONFORMING TO ASTM A325-N UNLESS OTHERWISE SHOWN. BOLTS INDICATED AS MACHINE BOLTS (MB) SHALL CONFORM TO ASTM A307 FOR CARBON STEEL, A193 FOR STAINLESS STEEL AND A153 FOR GALVANIZED STEEL. ANCHOR BOLTS EMBEDDED IN CONCRETE SHALL BE STAINLESS STEEL CONFORMING TO ASTM A193.
3. ALL STRUCTURAL STEEL SHALL BE FABRICATED AND ERECTED IN CONFORMANCE WITH THE AISC MANUAL OF STEEL CONSTRUCTION, CURRENT EDITION.
4. ALL WELDS SHALL BE PERFORMED BY AWS CERTIFIED WELDERS AND SHALL CONFORM TO AWS D1.1, LATEST EDITION. SUBMIT COPY OF ALL CERTIFICATIONS TO THE ENGINEER. ALL BUTT WELDS ARE FULL PENETRATION UNLESS INDICATED OTHERWISE. WELD FILLER METAL SHALL BE AWS A5.1 OR A5.5 E70XX ELECTRODES.
5. ALL WELDS FOUND DEFECTIVE SHALL BE REPAIRED (OR REPLACED) AND RETESTED FOR ADEQUACY AT THE CONTRACTOR'S EXPENSE.
6. AT ALL FIELD WELDS WHERE PLATES AND ANGLES ARE EMBEDDED IN CONCRETE, LOW HEAT AND INTERMITTENT WELDS SHALL BE UTILIZED TO AVOID SPALLING OR CRACKING THE EXISTING CONCRETE.
7. HOT DIP GALVANIZE ALL STRUCTURAL STEEL MEMBERS AND STEEL FABRICATIONS AFTER FABRICATION IS COMPLETED. GALVANIZING SHALL CONFORM TO ASTM A123. GALVANIZE COMPONENTS OF BOLTED ASSEMBLIES SEPARATELY BEFORE ASSEMBLY.

STRUCTURAL ABBREVIATIONS

AB	ANCHOR BOLT	FD	FLOOR DRAIN	RC	REINFORCED CONCRETE
AHR	ANCHOR	FDN	FOUNDATION	REINF	REINFORCE
AL	ALUMINUM	FG	FINISHED GRADE	RST	REINFORCING STEEL
ALTN	ALTERNATE	FTG	FOOTING		
APVD	APPROVED	GALV	GALVANIZE	SIM	SIMILIAR
BOT	BOTTOM		*HOT DIP*	SPECS	SPECIFICATIONS
BF	BOTTOM FACE	GVL	GRAVEL	SQ	SQUARE
BM	BEAM	HAS.	HEADED ANCHOR STUD	STD	STANDARD
BRG	BEARING	HDR	HEADER	STIF	STIFFENER
C TO C	CENTER TO CENTER	HORIZ	HORIZONTAL	STL	STEEL
CJ	CONSTRUCTION JOINT	I.F.	INSIDE FACE	STR	STRAIGHT
℄, CL	CENTER LINE	LNTL	LINTEL	STRUCT	STRUCTURES
CLR	CLEARANCE	LONG.	LONGITUDINAL	SYMM	SYMMETRICAL
COL	COLUMN	MAX	MAXIMUM	T&B	TOP AND BOTTOM
CONC	CONCRETE	MB	MACHINE BOLTS	TC	TOP OF CONCRETE
CONN	CONNECTION	MIN	MINIMUM	TF	TOP FACE
CONT	CONTINUOUS	NIC	NOT IN CONTRACT	THK	THICK
CTR	CENTER	NTS	NOT TO SCALE	TRANSV	TRANSVERSE
DBA	DEFORMED BAR ANCHOR	OC	ON CENTER	TST	TOP OF STEEL
DIA	DIAMETER	O.F.	OUTSIDE FACE	TW	TOP OF WALL
DIR	DIRECTION	O TO O	OUT TO OUT	TYP	TYPICAL
DWG	DRAWING	OPNG	OPENING	VERT	VERTICAL
EA	EACH	PJF	PREMOLDED JOINT FILLER	WS	WATERSTOP OR WATER SURFACE
EF	EACH FACE	PLYWD	PLYWOOD	WWF	WELDED WIRE FABRIC
EL	ELEVATION	PRCST	PRECAST		
EQL SP	EQUALLY SPACED	P	PILASTER		
EW	EACH WAY				
EXP JT	EXPANSION JOINT				
EXST	EXISTING				

NOTES

FOR ABBREVIATIONS NOT LISTED, SEE "ABBREVIATIONS FOR USE ON DRAWINGS AND TEXT", PUBLISHED BY THE AMERICAN NATIONAL STANDARDS INSTITUTE INC. *ANSI*

Contact Arizona 811 at least two full working days before you begin excavation
ARIZONA811 BLUE STAKE, INC.
Call 811 or click Arizona811.com

REV.	DATE	REVISION DESCRIPTION	BY

GCE inc.
GEORGE CAIRO ENGINEERING, INC.
STAPLEY CENTER
1630 S. STAPLEY DR., SUITE 117
MESA, ARIZONA 85204
WWW.GCAIROINC.COM

NOT FOR CONSTRUCTION 90% SUBMITTAL 09/13/24

DESIGNED BY:	B. JONES
DRAWN BY:	A. SOTO
APPROVED BY:	G. CAIRO
PROJECT No.:	BWC-43
PLOT DATE:	SEPT, 2024

BUCKEYE WATER CONSERVATION AND DRAINAGE DISTRICT
205 EAST ROOSEVELT AVENUE
BUCKEYE, ARIZONA 85326
(623) 386-2196

ROOKS ROAD BRIDGE CROSSING BWCDD MAIN CANAL & LATERAL 24 RELOCATION PHASE 3
BUCKEYE, ARIZONA

STRUCTURAL NOTES

G - 4

REUSE OF DOCUMENT: THESE PLANS & SPECIFICATIONS, AND THE IDEAS & DESIGNS INCORPORATED HEREIN, AS AN INSTRUMENT OF PROFESSIONAL SERVICE, ARE THE PROPERTY OF GCE, INC., AND ARE NOT TO BE USED, IN WHOLE OR IN PART, FOR ANY OTHER PROJECT WITHOUT THE WRITTEN AUTHORIZATION AND CONSENT OF GCE, INC. ©

Z:\GCE Projects\BWC-43\dwg\PHASE 3\01_BWC-43_Phase 3_G.dwg|jonesb 09/13/24 - 3:23pm

ABBREVIATIONS:

@	AT
AB	AGGREGATE BASE
ABC	AGGREGATE BASE COURSE
AC	ASPHALTIC CONCRETE
ACI	AMERICAN CONCRETE INSTITUTE
ADDL	ADDITIONAL
ADJ	ADJACENT, ADJUSTABLE
ADOT	ARIZONA DEPARTMENT OF TRANSPORTATION
AG	AGRICULTURAL
AL	ALUMINUM
APPROX	APPROXIMATE, APPROXIMATELY
APVD	APPROVED
AVE	AVENUE
AVG	AVERAGE
AWWA	AMERICAN WATER WORKS ASSOCIATION
BC	BRASS CAP
BEG	BEGIN, BEGINNING
BLDG	BUILDING
BM	BENCHMARK
BOTT	BOTTOM
BW	BARBED WIRE
BWCDD	BUCKEYE WATER CONSERVATION AND DRAINAGE DISTRICT
C/L	CHAIN LINK
CONC	CONCRETE
CAP	CAPACITY OR CENTRAL ARIZONA PROJECT
CFS	CUBIC FEET PER SECOND
CJ	CONSTRUCTION JOINT
CL	CENTERLINE
CLR	CLEAR, CLEARANCE
CLSM	CONTROL LOW STRENGTH MATERIAL
CMP	CORRUGATED METAL PIPE
COB	CITY OF BUCKEYE
COR	CORNER
CP	CONTROL POINTS
C TO C	CENTER TO CENTER
CTR	CENTER
CU	CUBIC
CU FT	CUBIC FOOT
CU IN.	CUBIC INCH
CU YD	CUBIC YARD
CULV	CULVERT
CV	CHECK VALVE
CWS	CHECKED WATER SURFACE
D/W	DRIVEWAY
D	DEPTH
DEG	DEGREE
DEMO	DEMOLITION
DET	DETAIL
DG	DOWN GUY
DIA	DIAMETER
DIP	DUCTILE IRON PIPE
DR	DRIVE
DWG, DWGS	DRAWING, DRAWINGS
DWS	DESIGN WATER SURFACE
E	EAST, ELECTRIC
EA	EACH
EF	EACH FACE
EX GR	EXISTING GRADE
EL, ELEC	ELECTRIC, ELECTRICAL, ELEVATION
ELEV	ELEVATION
ENGR	ENGINEER
EP	EDGE OF PAVEMENT
EQL	EQUAL
ESMT	EASEMENT
EW	EACH WAY
EX	EXISTING
EXP JT	EXPANSION JOINT
FAB	FABRICATION
FD	FOUND
FIN GR	FINISH GRADE
FLEX	FLEXIBLE
F.O.	FIBER OPTIC
FT	FOOT, FEET
FTG	FOOTING
G	GAS
GALV	GALVANIZED
GB	GRAB BAR, GRADE BREAK
GND	GROUND
GPM	GALLONS PER MINUTE
GRTG	GRATING
GT, GTR	GUTTER
GV	GAS VALVE
HDPE	HIGH DENSITY POLYETHYLENE
HDWL	HEADWALL
HGL	HYDRAULIC GRADE LINE
HGT	HEIGHT
HORIZ	HORIZONTAL
HW	HIGH WATER
HWY	HIGHWAY
I.D.	INSIDE DIAMETER
IE	INVERT ELEVATION
IF	INSIDE FACE
IN.	INCH
INV.	INVERT
IRR	IRRIGATION, IRRIGATION VALVE
JT	JOINT
L	LENGTH
LAT	LATERAL
LF	LINEAR FEET
LN	LANE
LS	LAND SURVEYOR
M	MEASURED
MAG	MARICOPA ASSOCIATION OF GOVERNMENTS
MATL	MATERIAL
MAX	MAXIMUM
MC	MARICOPA COUNTY
MH	MANHOLE
MIN	MINIMUM
MISC	MISCELLANEOUS
MON	MONUMENT
MTL	METAL
N/A	NOT APPLICABLE
N/C	NOT IN CONTRACT
N	NORTH
NAVD	NORTH AMERICAN VERTICAL DATUM
NE	NORTHEAST
NO.	NUMBER
NOM	NOMINAL
NORM	NORMAL
NP	NATIONAL PIPE THREAD
NTS	NOT TO SCALE
NW	NORTHWEST
NWS	NORMAL WATER SURFACE
O/H	OVERHEAD
O&M	OPERATION & MAINTENANCE
O.C.	ON CENTER
O.D.	OUTSIDE DIAMETER
OPNG	OPENING
PI	POINT OF INTERSECTION
PIE	PERMANENT IRRIGATION EASEMENT
PL	PROPERTY LINE
POB	POINT OF BEGINNING
POC	POINT OF CURVATURE
POE	POINT OF ENDING
POT	POINT OF TANGENT
PP	POWER POLE
PRCST	PRECAST
PSF	POUNDS PER SQUARE FOOT
PSI	POUNDS PER SQUARE INCH
PUE	PUBLIC UTILITY EASEMENT
PVC	POLYVINYL CHLORIDE
PVMT	PAVEMENT
Q	FLOW RATE (CFS)
QTY	QUANTITY
R/W	RIGHT OF WAY
RAD	RADIUS
RB	REBAR
RC	REINFORCED CONCRETE
RCP	REINFORCED CONCRETE PIPE
RD	ROAD
REINF	REINFORCE, REINFORCED, REINFORCING
REQD	REQUIRED
RR	RAILROAD
S	SEWER, SOUTH
SCH	SCHEDULE
SD	STORM DRAIN
SE	SOUTHEAST
SEC	SECTION
SIM	SIMILAR
SPECS	SPECIFICATIONS
SQ	SQUARE
SQ FT	SQUARE FOOT
SQ IN.	SQUARE INCH
SST, SS	STAINLESS STEEL
ST	STREET
STA	STATION
STD	STANDARD
STL	STEEL
STRUCT	STRUCTURE
SUSP	SUSPEND
SW	SOUTHWEST
SYMM	SYMMETRICAL
T	TANGENT, TOWNSHIP, TREAD
T&B	TOP AND BOTTOM
TBM	TEMPORARY BENCH MARK
TC	TOP OF CONCRETE, TOP OF CURB
TCE	TEMPORARY CONSTRUCTION EASEMENT
TEMP	TEMPORARY
TOB	TOP OF BANK
TOL	TOP OF LINING
TOP	TOP OF PIPE
TRANS	TRANSITION
TST, TOS	TOP OF STEEL, TOP OF STRUCTURE
TYP	TYPICAL
U/G	UNDERGROUND
UBC	UNIFORM BUILDING CODE
UNK	UNKNOWN
UNO	UNLESS NOTED OTHERWISE
USBR	UNITED STATES BUREAU OF RECLAMATION
VC	VERTICAL CURVE
VERT	VERTICAL
W/	WITH
W	WATER, WEST
WB	WESTBOUND
WM	WATER METER
WS	WATER STOP, WATER SURFACE
WSEL	WATER SURFACE ELEVATION
WV	WATER VALVE
X	ELECTRICAL TRANSFORMER
YD	YARD
YR	YEAR

NOTE:

FOR ABBREVIATIONS NOT LISTED IN THIS STANDARD LIST, SEE "ABBREVIATIONS FOR USE ON DRAWINGS AND TEXT", PUBLISHED BY THE AMERICAN NATIONAL STANDARDS INSTITUTE, INC. (ANSI)

LEGEND

NEW SLOPES (CONCRETE)

NEW SLOPES (EARTHEN)

EX SLOPES (CONCRETE)

EX SLOPES (EARTHEN)

NEW ASPHALT PAVEMENT

EX ASPHALT PAVEMENT

FUTURE CONC - CLIENT FILES (HATCH OPTIONAL)

NEW IRRIGATION PIPE

EX IRRIGATION PIPE

NEW/EX STAND PIPE

NEW/EX IRRIGATION STRUCTURE

NEW/EX IRRIGATION MANHOLE

NEW/EX IRRIGATION HEADWALL

NEW/EX IRRIGATION FLOW CONTROL STRUCTURE

CONCRETE PIPE COLLAR

NEW/EX DOWN GUY

POWER POLE

TRAFFIC LIGHT

STREET LIGHT

LIGHT POST

FIRE HYDRANT

WATER VALVE

STREET SIGNS

BARRICADE

EX TREE, PALM OR SHRUB

NEW SPOT ELEVATION — EL. 1422.23

EX SPOT ELEVATION — EL 1452.22

CONSTRUCTION NOTE — 55

SALVAGE NOTE — 55

REMOVAL NOTE — 55

PROJECT BENCHMARK

TEMP BENCH MARK

SECTION CORNER — T5S 04|03 09|10 R8E

DEMOLISH AND REMOVAL HATCH

DIRT HATCH

CONCRETE HATCH

ROCK RIPRAP (AS NOTED)

PROPERTY

ESMT/PIE

DRAINAGE ESMT

TEMP CONST ESMT

SECTION LINE

RIGHT OF WAY

NEW WATER LINE

EX WATER LINE

NEW GAS LINE

EX GAS LINE

NEW STORM DRAIN

EX STORM DRAIN

NEW SEWER LINE

EX SEWER LINE

NEW RECLAIMED WATER LINE

EX RECLAIMED WATER LINE

GRADE EX

EX RECLAIMED WATER LINE

NEW/EX FENCE

NEW/EX CHAIN LINK

NEW/EX IRON POST FENCE

GRADING - DAYLIGHT

GRADING - CUT

DRAWING DESIGNATION

S-2

DISCIPLINE (SEE TABLE) — DRAWING NUMBER

LETTER	DISCIPLINE
D	DETAILS
G	GENERAL
P	PLAN & PROFILE
S	STRUCTURAL
SP	SITE PLAN
B	BRIDGE

SCREENING

SCREENED ELEMENTS ON AREA MAPPING REPRESENT EXISTING FACILITIES OR ELEVATIONS.

SCREENED BACKGROUNDS ON OTHER DRAWINGS CAN REPRESENT EXISTING FACILITIES OR FACILITIES TO BE CONSTRUCTED UNDER THIS CONTRACT, WHICH, IF DRAWN IN SOLID LINES, WOULD OBSCURE THE PARTICULAR DETAILS BEING SHOWN. CONSULT THE ENGINEER IF SCREENING OF ANY ELEMENT IS NOT SELF-EXPLANATORY.

SECTION AND DETAIL STANDARDS

DETAIL (NUMERAL) DESIGNATION ON DRAWING WHERE DETAIL IS TAKEN — 1 / S-1

SECTION (LETTER) DESIGNATION ON DRAWING WHERE SECTION IS TAKEN. ARROW INDICATES DIRECTION OF SECTION — B / S-1

SHEET NUMBER (OR LINE IF TAKEN AND SHOWN ON SAME DRAWING OR BOTH) ON DRAWING WHERE SECTION OR DETAIL IS SHOWN.

SITE PLAN / STANDARD DETAIL DESIGNATION

SEE "SECTION AND DETAIL IDENTIFICATION SYSTEM" FOR DEFINITIONS

1 / SP-1 OR 000

STANDARD DETAIL DESIGNATION (NUMERAL)

FACILITIES WITHIN OUTLINED AREA SHOWN ON SITE PLAN OR ADDITIONAL SHEET

STANDARD DETAIL AS SHOWN 000 ARE INTENDED TO BE TYPICAL AND SHALL APPLY TO ALL SIMILAR SITUATIONS OCCURING ON THE PROJECT, WHETHER OR NOT THEY ARE KEYED IN EACH LOCATION. CONSULT THE ENGINEER FOR REVIEW PRIOR TO CONSTRUCTION.

Contact Arizona 811 at least two full working days before you begin excavation

ARIZONA811 BLUE STAKE, INC.

Call 811 or click Arizona811.com

REV.	DATE	REVISION DESCRIPTION	BY

GCE inc.
GEORGE CAIRO ENGINEERING, INC.
STAPLEY CENTER
1630 S. STAPLEY DR., SUITE 117
MESA, ARIZONA 85204
WWW.GCAIROINC.COM

NOT FOR CONSTRUCTION 90% SUBMITTAL 09/13/24

DESIGNED BY:	B. JONES
DRAWN BY:	A. SOTO
APPROVED BY:	G. CAIRO
PROJECT No.:	BWC-43
PLOT DATE:	SEPT, 2024

BWCDD
BUCKEYE WATER CONSERVATION AND DRAINAGE DISTRICT
205 EAST ROOSEVELT AVENUE
BUCKEYE, ARIZONA 85326
(623) 386-2196

ROOKS ROAD BRIDGE CROSSING BWCDD MAIN CANAL & LATERAL 24 RELOCATION PHASE 3

BUCKEYE, ARIZONA

ABBREVIATIONS, LEGEND, AND DRAWING DESIGNATIONS

G - 5

REUSE OF DOCUMENT: THESE PLANS & SPECIFICATIONS, AND THE IDEAS & DESIGNS INCORPORATED HEREIN, AS AN INSTRUMENT OF PROFESSIONAL SERVICE, ARE THE PROPERTY OF GCE, INC., AND ARE NOT TO BE USED, IN WHOLE OR IN PART, FOR ANY OTHER PROJECT WITHOUT THE WRITTEN AUTHORIZATION AND CONSENT OF GCE, INC. ©

GCE PROJECT No.: BWC
BWCDD MAIN CANAL
BWCDD PROJECT No.: BWC-2149

Z:\GCE Projects\BWC-43\dwg\PHASE 3\01_BWC-43_Phase 3_G.dwg|jonesb 09/13/24 - 3:23pm

KEY PLAN

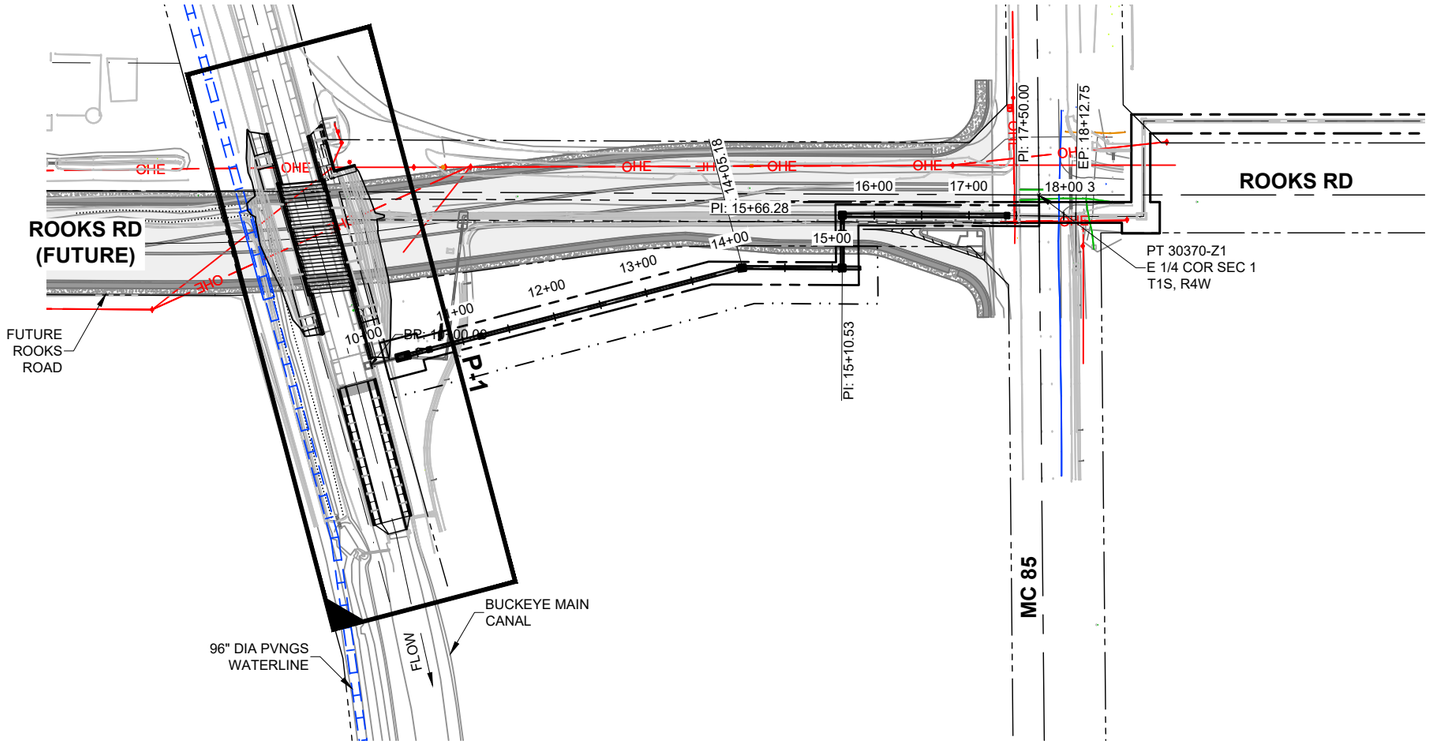

DRAWING NUMBER → X-X

PLAN WINDOW ON PLAN AND PROFILE DRAWING

INDICATES LOWER RIGHT CORNER OF PLAN WINDOW

SURVEY CONTROL

SURVEY CONTROL				
POINT	NORTHING	EASTING	ELEVATION	DESCRIPTION
30370-Z1	165603.32	289107.36	891.20	MARICOPA COUNTY ALUMINUM CAP FLUSH 101' EAST OF ROOKS ROAD & BASELINE ROAD
30351-1	162967.75	288919.60	876.49	MARICOPA COUNTY BRASS CAP IN HAND HOLE @ MC 85 HWY & ROOKS ROAD
50631-2M	165587.30	2915590.72	890.73	MARICOPA COUNTY ALUMINUM CAP FLUSH N 1/4 COR. SEC 6 T1S, R3W
30369-2M	165624.10	286448.86	892.87	MARICOPA COUNTY ALUMINUM CAP FLUSH N 1/4 COR. SEC. 1 T1S, R4W
50666-Z1	165586.45	291748.32	890.02	MARICOPA COUNTY BRASS CAP FLUSH. 158' EAST OF THE N 1/4 COR. SEC. 6 T1S, R3W

NOTE: BENCHMARK INFORMATION PROVIDED BY BURGESS & NIPLE, INC.

QUANTITIES

LAT 24 CONSTRUCTION QUANTITIES PHASE 3		
ITEM	QUANTITIES	UNIT
BRIDGE STRUCTURE	1	EA
WING WALL	240	LF
RETAINING WALL	52	LF
SLOPE PAVING	220	LF

NOTES:

1. ALL QUANTITIES ARE APPROXIMATE AND SHALL BE VERIFIED BY THE CONTRACTOR PRIOR TO CONSTRUCTION.

Contact Arizona 811 at least two full working days before you begin excavation

ARIZONA811 BLUE STAKE, INC.

Call 811 or click Arizona811.com

REV.	DATE	REVISION DESCRIPTION	BY

GCE inc.
GEORGE CAIRO ENGINEERING, INC.
STAPLEY CENTER
1630 S. STAPLEY DR., SUITE 117
MESA, ARIZONA 85204
WWW.GCAIROINC.COM

NOT FOR CONSTRUCTION 90% SUBMITTAL 09/13/24

DESIGNED BY:	B. JONES
DRAWN BY:	A. SOTO
APPROVED BY:	G. CAIRO
PROJECT No.:	BWC-43
PLOT DATE:	SEPT, 2024

BWCDD
Buckeye Water Conservation & Drainage District

BUCKEYE WATER CONSERVATION AND DRAINAGE DISTRICT
205 EAST ROOSEVELT AVENUE
BUCKEYE, ARIZONA 85326
(623) 386-2196

ROOKS ROAD BRIDGE CROSSING BWCDD MAIN CANAL & LATERAL 24 RELOCATION PHASE 3
BUCKEYE, ARIZONA

KEY PLAN, SURVEY CONTROL, AND QUANTITIES

G - 6

REUSE OF DOCUMENT: THESE PLANS & SPECIFICATIONS, AND THE IDEAS & DESIGNS INCORPORATED HEREIN, AS AN INSTRUMENT OF PROFESSIONAL SERVICE, ARE THE PROPERTY OF GCE, INC., AND ARE NOT TO BE USED, IN WHOLE OR IN PART, FOR ANY OTHER PROJECT WITHOUT THE WRITTEN AUTHORIZATION AND CONSENT OF GCE, INC. ©

Z:\GCE Projects\BWC-43\dwg\PHASE 3\01_BWC-43_Phase 3_G.dwg|jonesb 09/13/24 - 3:23pm

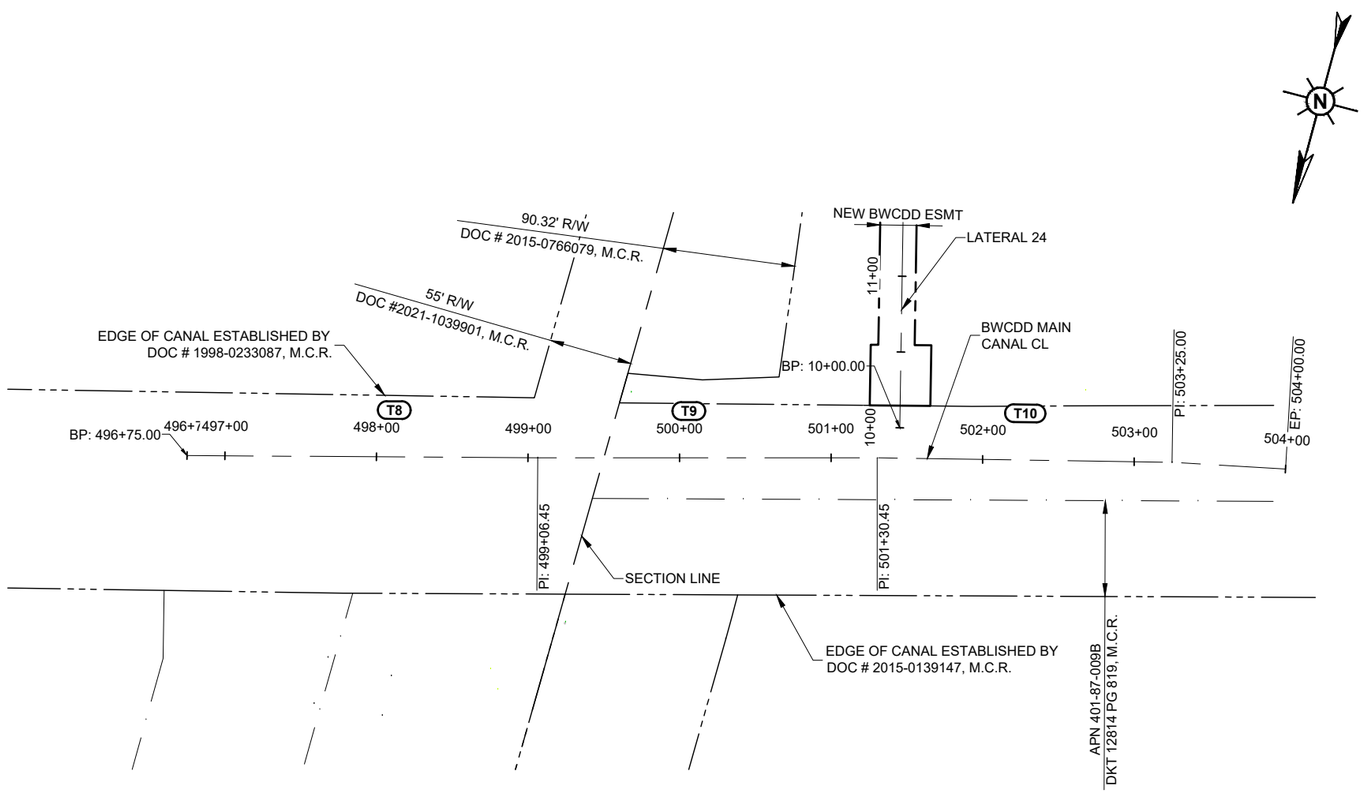

BWCDD MAIN CANAL GEOMETRIC ALIGNMENT

BWCDD MAIN CANAL TANGENT COORDINATE TABLE						
TANGENT #	START STA	BEARING	DISTANCE	END STA	START POINT (N, E)	END POINT (N, E)
T8	496+75.00	S75°10'39"W	231.45'	499+06.45	(163814.94,289194.23)	(163755.73,288970.49)
T9	499+06.45	S74°48'15"W	224.00'	501+30.45	(163755.73,288970.49)	(163697.01,288754.32)
T10	501+30.45	S75°40'50"W	194.55'	503+25.00	(163697.01,288754.32)	(163648.89,288565.81)

Contact Arizona 811 at least two full working days before you begin excavation
ARIZONA811 BLUE STAKE, INC.
Call 811 or click Arizona811.com

REV.	DATE	REVISION DESCRIPTION	BY

GCE inc.
GEORGE CAIRO ENGINEERING, INC.
STAPLEY CENTER
1630 S. STAPLEY DR., SUITE 117
MESA, ARIZONA 85204
WWW.GCAIROINC.COM

NOT FOR CONSTRUCTION
90% SUBMITTAL
09/13/24

DESIGNED BY:	B. JONES
DRAWN BY:	A. SOTO
APPROVED BY:	G. CAIRO
PROJECT No.:	BWC-43
PLOT DATE:	SEPT, 2024

BWCDD
Buckeye Water Conservation & Drainage District

BUCKEYE WATER CONSERVATION AND DRAINAGE DISTRICT
205 EAST ROOSEVELT AVENUE
BUCKEYE, ARIZONA 85326
(623) 386-2196

ROOKS ROAD BRIDGE CROSSING BWCDD MAIN CANAL & LATERAL 24 RELOCATION PHASE 3
BUCKEYE, ARIZONA

GEOMETRIC ALIGNMENT AND COORDINATE TABLE

G - 7

REUSE OF DOCUMENT: THESE PLANS & SPECIFICATIONS, AND THE IDEAS & DESIGNS INCORPORATED HEREIN, AS AN INSTRUMENT OF PROFESSIONAL SERVICE, ARE THE PROPERTY OF GCE, INC., AND ARE NOT TO BE USED, IN WHOLE OR IN PART, FOR ANY OTHER PROJECT WITHOUT THE WRITTEN AUTHORIZATION AND CONSENT OF GCE, INC. ©

Z:\GCE Projects\BWC-43\dwg\PHASE 3\01_BWC-43_Phase 3_G.dwg|jonesb 09/13/24 - 3:23pm

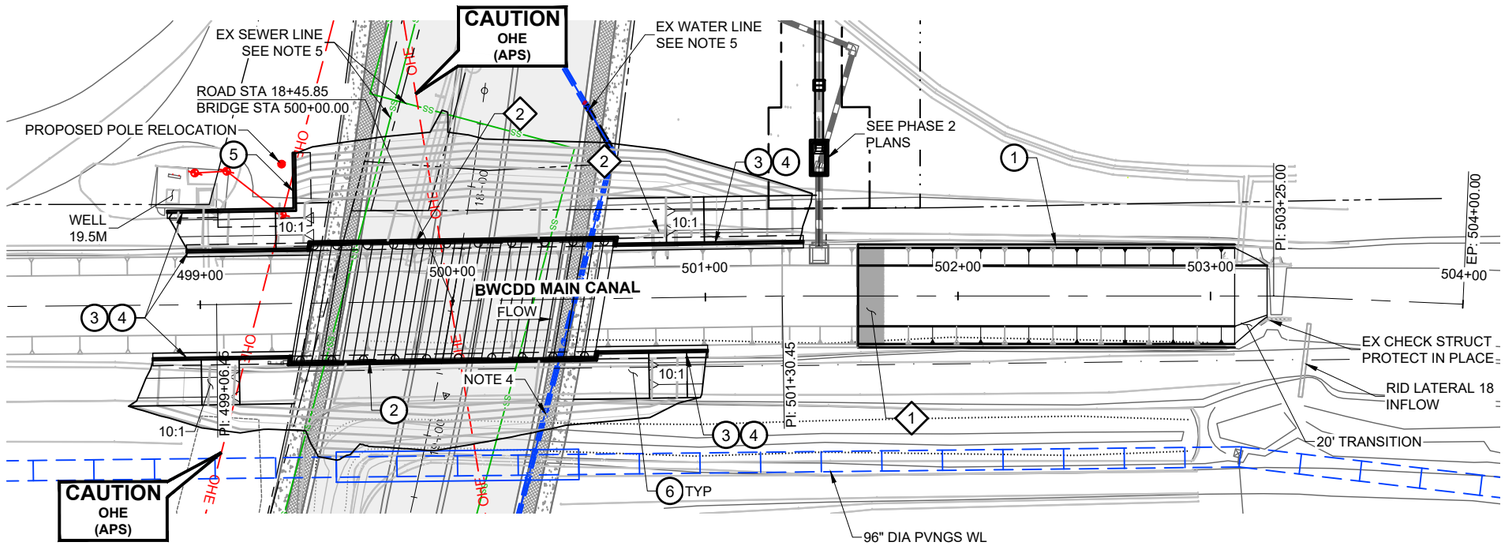

PLAN

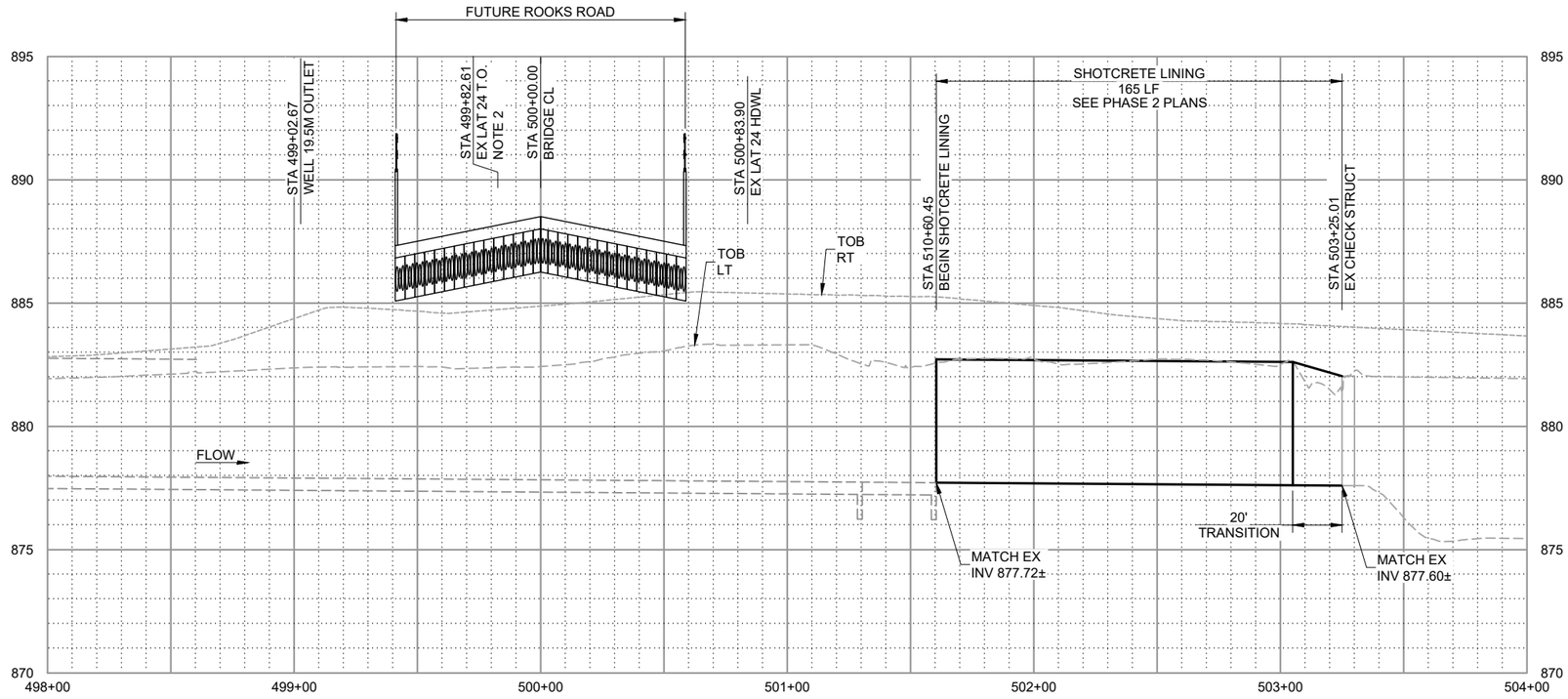

PROFILE

DEMOLITION NOTES

NO.	DESCRIPTION		
1	REMOVE RIPRAP	10	LF
2	REMOVE EX STRUCTURE, NOTE 2	2	EA

CONSTRUCTION NOTES

NO.	DESCRIPTION		
1	SHOTCRETE LINING, SEE PHASE 2 PLANS.		
2	CONSTRUCT BRIDGE STRUCTURE.	1	EA
3	WING WALL, SEE SP-3.	240	LF
4	104A SLOPE PAVING.	220	LF
5	RETAINING WALL, SEE SP-3.	52	LF
6	CONSTRUCT PAVED O&M TO BRIDGE TRANSITIONS	4	EA

GENERAL NOTES

1. FUTURE ROADWAY IMPROVEMENTS AS SHOWN PROVIDED BY BURGESS & NIPLE, INC. FOR ILLUSTRATION AND REFERENCE PURPOSES ONLY.
2. EXISTING LAT 24 T.O. PLUGGED AS PART OF LAT 24 T.O. AND INTERIM RELOCATIONS TO BE REMOVED AS PART OF THIS PROJECT.
3. CONSTRUCTION ACTIVITIES SHALL OCCUR DURING 2024 DRY-UP.
4. KORE WATER LINE SHALL BE RELOCATED TO CENTER OF BRIDGE DRILLED SHAFTS.
5. **ALL UTILITIES SHALL BE STAKED AND VERIFIED PRIOR TO CONSTRUCTION OF DRILLED SHAFTS. FINAL LOCATION OF DRILLED SHAFTS SHALL BE APPROVED BY ENGINEER.**

HORIZ SCALE: 0' 30' 60'

VERT SCALE: 0' 3' 6'

Contact Arizona 811 at least two full working days before you begin excavation
Call 811 or click Arizona811.com

REV.	DATE	REVISION DESCRIPTION	BY

GEORGE CAIRO ENGINEERING, INC.
STAPLEY CENTER
1630 S. STAPLEY DR., SUITE 117
MESA, ARIZONA 85204
WWW.GCAIROINC.COM

NOT FOR CONSTRUCTION
90% SUBMITTAL
09/13/24

DESIGNED BY:	B. JONES
DRAWN BY:	A. SOTO
APPROVED BY:	G. CAIRO
PROJECT No.:	BWC-43
PLOT DATE:	SEPT, 2024

BUCKEYE WATER CONSERVATION AND DRAINAGE DISTRICT
205 EAST ROOSEVELT AVENUE
BUCKEYE, ARIZONA 85326
(623) 386-2196

ROOKS ROAD BRIDGE CROSSING BWCDD MAIN CANAL & LATERAL 24 RELOCATION
PHASE 3
BUCKEYE, ARIZONA

BWCDD MAIN CANAL
PLAN AND PROFILE

P - 1

GCE PROJECT No.: BWC

BWCDD MAIN CANAL

BWCDD PROJECT No.: BWC-2149

Z:\GCE Projects\BWC-43\dwg\PHASE 3\02_BWC-43_Phase 3_P.dwg|jonesb 09/13/24 - 3:24pm

REUSE OF DOCUMENT: THESE PLANS & SPECIFICATIONS, AND THE IDEAS & DESIGNS INCORPORATED HEREIN, AS AN INSTRUMENT OF PROFESSIONAL SERVICE, ARE THE PROPERTY OF GCE, INC., AND ARE NOT TO BE USED, IN WHOLE OR IN PART, FOR ANY OTHER PROJECT WITHOUT THE WRITTEN AUTHORIZATION AND CONSENT OF GCE, INC. ©

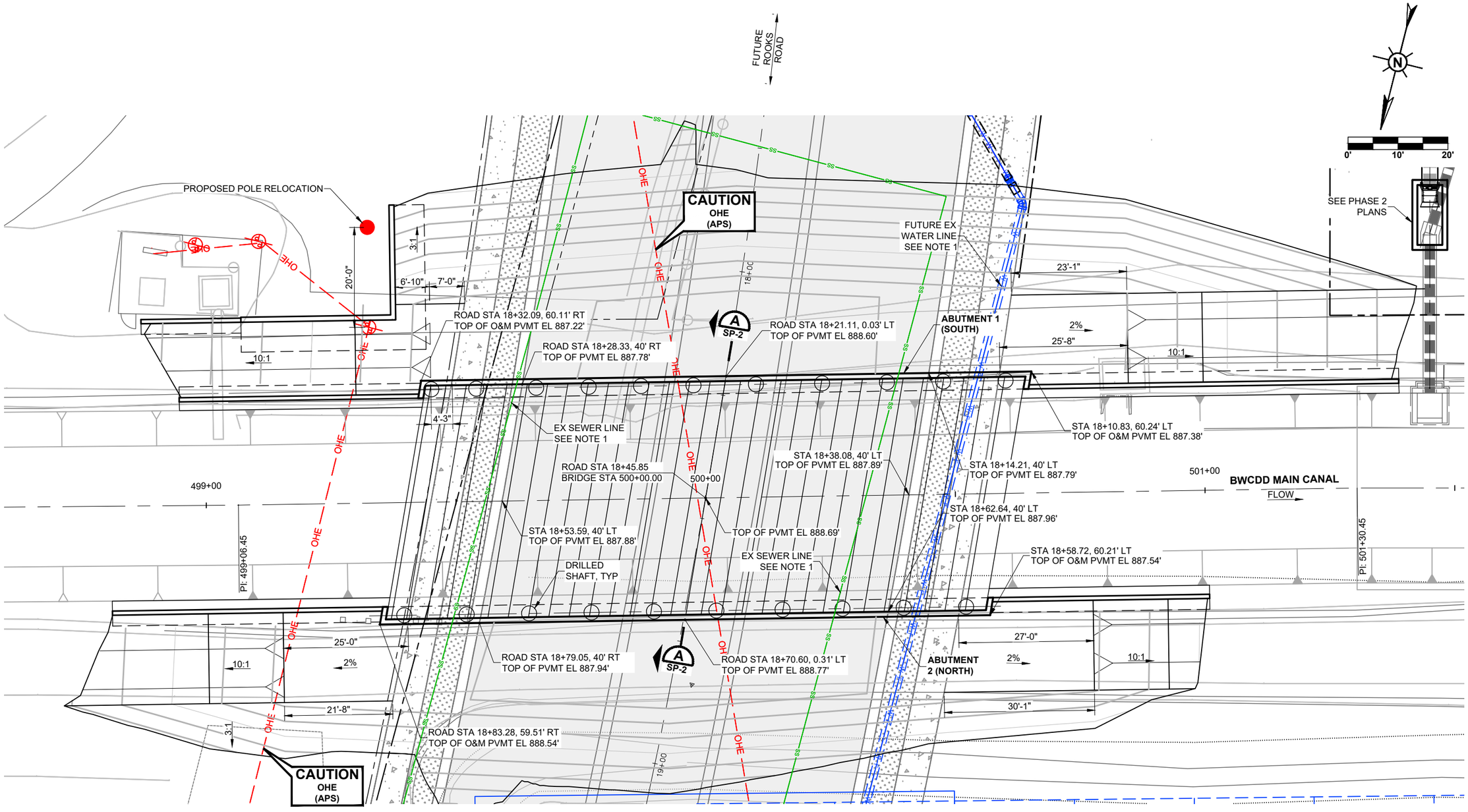

BRIDGE SITE PLAN

NTS

NOTE:

1. ALL UTILITIES SHALL BE STAKED AND VERIFIED PRIOR TO CONSTRUCTION OF DRILLED SHAFTS. FINAL LOCATION OF DRILLED SHAFTS SHALL BE APPROVED BY ENGINEER.
2. SEE BD SHEETS FOR BRIDGE DETAILS.

Contact Arizona 811 at least two full working days before you begin excavation

ARIZONA811 BLUE STAKE, INC.

Call 811 or click Arizona811.com

REV.	DATE	REVISION DESCRIPTION	BY

GCE inc.
GEORGE CAIRO ENGINEERING, INC.
STAPLEY CENTER
1630 S. STAPLEY DR., SUITE 117
MESA, ARIZONA 85204
WWW.GCAIROINC.COM

NOT FOR CONSTRUCTION
90% SUBMITTAL
09/13/24

DESIGNED BY:	B. JONES
DRAWN BY:	A. SOTO
APPROVED BY:	G. CAIRO
PROJECT No.:	BWC-43
PLOT DATE:	SEPT, 2024

Buckeye Water Conservation & Drainage District
BWCDD

BUCKEYE WATER CONSERVATION AND DRAINAGE DISTRICT
205 EAST ROOSEVELT AVENUE
BUCKEYE, ARIZONA 85326
(623) 386-2196

ROOKS ROAD BRIDGE CROSSING BWCDD MAIN CANAL & LATERAL 24 RELOCATION PHASE 3

BUCKEYE, ARIZONA

BRIDGE SITE PLAN

SP - 1

REUSE OF DOCUMENT: THESE PLANS & SPECIFICATIONS, AND THE IDEAS & DESIGNS INCORPORATED HEREIN, AS AN INSTRUMENT OF PROFESSIONAL SERVICE, ARE THE PROPERTY OF GCE, INC., AND ARE NOT TO BE USED, IN WHOLE OR IN PART, FOR ANY OTHER PROJECT WITHOUT THE WRITTEN AUTHORIZATION AND CONSENT OF GCE, INC. ©

Z:\GCE Projects\BWC-43\dwg\PHASE 3\03_BWC-43_Phase 3_SP.dwg|onesb 09/13/24 - 3:24pm

HORIZ SCALE:
0' 5' 10'

VERT SCALE:
0' 5' 10'

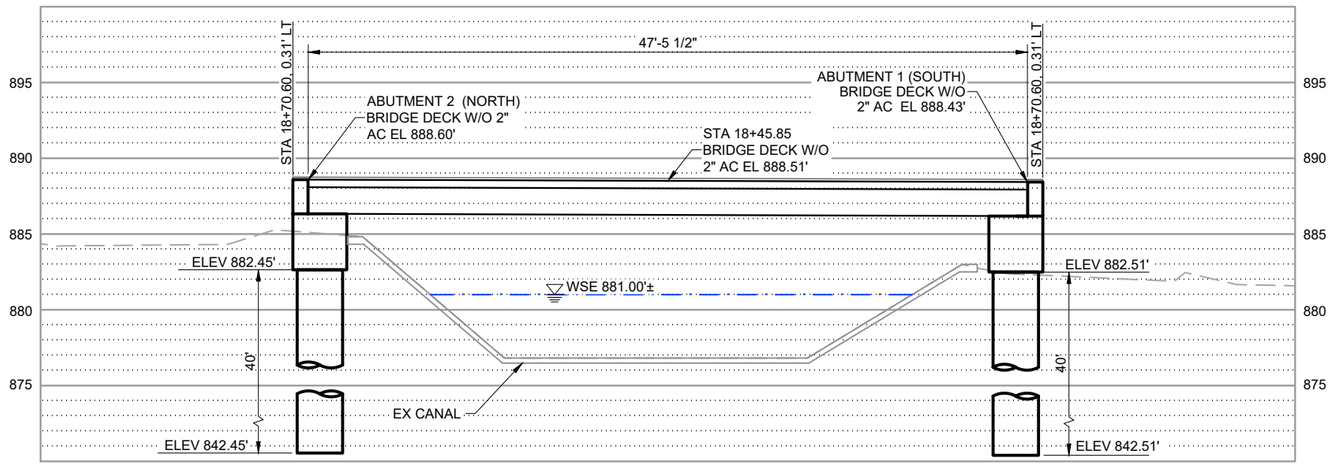

BRIDGE SECTION A
NTS

Contact Arizona 811 at least two full working days before you begin excavation
ARIZONA811 BLUE STAKE, INC.
Call 811 or click Arizona811.com

REV.	DATE	REVISION DESCRIPTION	BY

GCE inc.
GEORGE CAIRO ENGINEERING, INC.
STAPLEY CENTER
1630 S. STAPLEY DR., SUITE 117
MESA, ARIZONA 85204
WWW.GCAIROINC.COM

NOT FOR CONSTRUCTION
90% SUBMITTAL
09/13/24

DESIGNED BY:	B. JONES
DRAWN BY:	A. SOTO
APPROVED BY:	G. CAIRO
PROJECT No.:	BWC-43
PLOT DATE:	SEPT, 2024

BWCDD
Buckeye Water Conservation & Drainage District

BUCKEYE WATER CONSERVATION AND DRAINAGE DISTRICT
205 EAST ROOSEVELT AVENUE
BUCKEYE, ARIZONA 85326
(623) 386-2196

ROOKS ROAD BRIDGE CROSSING BWCDD MAIN CANAL & LATERAL 24 RELOCATION PHASE 3
BUCKEYE, ARIZONA

BRIDGE CANAL SECTION

SP - 2

REUSE OF DOCUMENT: THESE PLANS & SPECIFICATIONS, AND THE IDEAS & DESIGNS INCORPORATED HEREIN, AS AN INSTRUMENT OF PROFESSIONAL SERVICE, ARE THE PROPERTY OF GCE, INC., AND ARE NOT TO BE USED, IN WHOLE OR IN PART, FOR ANY OTHER PROJECT WITHOUT THE WRITTEN AUTHORIZATION AND CONSENT OF GCE, INC. ©

GCE PROJECT No.: BWC
BWCDD MAIN CANAL
BWCDD PROJECT No.: BWC-2149
Z:\GCE Projects\BWC-43\dwg\PHASE 3\03_BWC-43_Phase 3_SP.dwg jonesb 09/13/24 - 3:24pm

NOTES:

1. CONTRACTOR SHALL REMOVE AND REPLACE FENCING FOR CONSTRUCTION OF RETAINING WALLS.

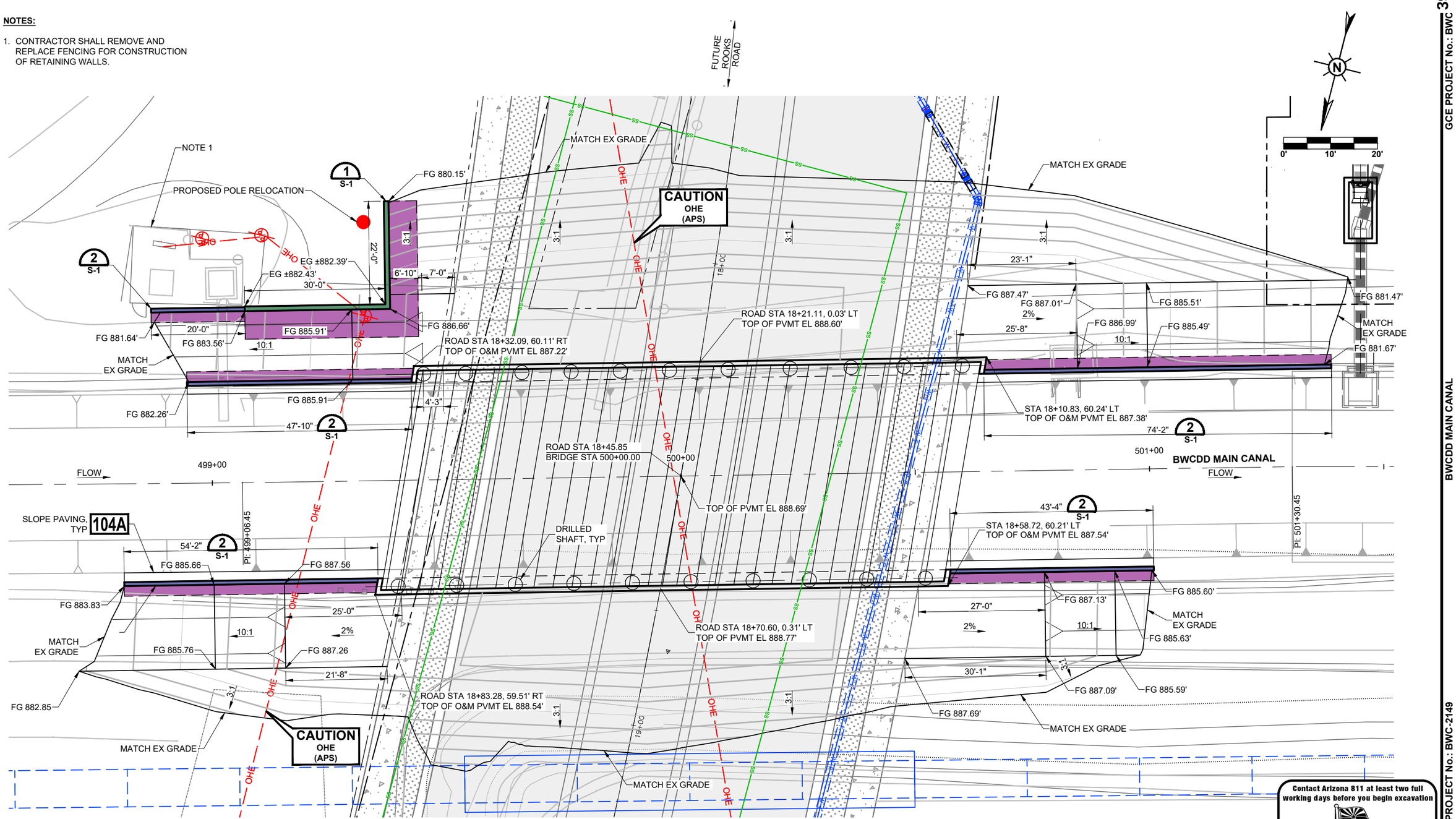

RETAINING WALL SITE PLAN

NTS

Contact Arizona 811 at least two full working days before you begin excavation

ARIZONA811 BLUE STAKE, INC.

Call 811 or click Arizona811.com

REV.	DATE	REVISION DESCRIPTION	BY

GCE inc.
GEORGE CAIRO ENGINEERING, INC.
STAPLEY CENTER
1630 S. STAPLEY DR., SUITE 117
MESA, ARIZONA 85204
WWW.GCAIROINC.COM

NOT FOR CONSTRUCTION
90% SUBMITTAL
09/13/24

DESIGNED BY:	B. JONES
DRAWN BY:	A. SOTO
APPROVED BY:	G. CAIRO
PROJECT No.:	BWC-43
PLOT DATE:	SEPT, 2024

BWCDD Buckeye Water Conservation & Drainage District

BUCKEYE WATER CONSERVATION AND DRAINAGE DISTRICT
205 EAST ROOSEVELT AVENUE
BUCKEYE, ARIZONA 85326
(623) 386-2196

ROOKS ROAD BRIDGE CROSSING BWCDD MAIN CANAL & LATERAL 24 RELOCATION PHASE 3

BUCKEYE, ARIZONA

RETAINING WALL SITE PLAN

SP - 3

REUSE OF DOCUMENT: THESE PLANS & SPECIFICATIONS, AND THE IDEAS & DESIGNS INCORPORATED HEREIN, AS AN INSTRUMENT OF PROFESSIONAL SERVICE, ARE THE PROPERTY OF GCE, INC., AND ARE NOT TO BE USED, IN WHOLE OR IN PART, FOR ANY OTHER PROJECT WITHOUT THE WRITTEN AUTHORIZATION AND CONSENT OF GCE, INC. ©

Z:\GCE Projects\BWC-43\dwg\PHASE 3\03_BWC-43_ Phase 3_ SP.dwg[onesb 09/13/24 - 3:24pm

GCE PROJECT No.: BWC 392

BWCDD PROJECT No.: BWC-2149

BWCDD MAIN CANAL

GENERAL NOTES:

DESIGN SPECIFICATIONS

AASHTO LRFD BRIDGE DESIGN SPECIFICATIONS, CUSTOMARY US UNITS, FOURTH EDITION, 2012 AND REVISIONS TO DATE.

CONSTRUCTION SPECIFICATIONS

MARICOPA ASSOCIATION OF GOVERNMENTS(MAG), UNIFORM STANDARD SPECIFICATIONS FOR PUBLIC WORKS CONSTRUCTION 2008 EDITION, APPLICABLE WHEN REFERENCED IN SPECIAL PROVISIONS AND AREAS NOT COVERED BY MAG SPECIFICATION.

DESIGN LOADINGS

LIVE LOAD, HL-93 (LRFD)

DEAD LOAD INCLUDES ALLOWANCES OF 25 PSF FOR FUTURE WEARING SURFACE.

THE SUPERSTRUCTURE IS DESIGNED AS COMPOSITE SECTION WITH THE TOP 1/2" OF SLAB THICKNESS REMOVED FROM THE DESIGN SECTION PROPERTIES TO ACCOUNT FOR GRINDING, GROOVING & WEARING.

SEISMIC PERFORMANCE ZONE 1 (ACCELERATION COEFFICIENT OF 0.04).

RATING

INVENTORY AND OPERATING RATING FOR HL-93 ARE IN ACCORDANCE WITH AASHTO MANUAL FOR BRIDGE EVALUATION, SECOND EDITION 2011 WITH 2013 INTERIM REVISIONS

INVENTORY 1.36
OPERATING 1.77

COMPOSITE DESIGN - DEAD LOAD CARRIED BY VOIDED SLAB ONLY, VOIDED SLABS ARE DESIGNED USING TRANSFORMED SECTION PROPERTIES.

CONCRETE STRESSES

ALL CONCRETE SHALL BE CLASS "S" PER THE ADOT STANDARD SPECIFICATIONS FOR ROAD AND BRIDGE CONSTRUCTION, 2008

DECK	f'c = 4,500 PSI - CLASS "S"
CURB, ABUTMENTS, APPROACH SLABS	f'c = 4,500 PSI - CLASS "S"
DRILLED SHAFTS	f'c = 4,500 PSI - CLASS "S"
GIRDERS	f'c = 6,000 PSI - SEE GIRDER SHEETS

REINFORCING STEEL SHALL CONFORM TO ASTM A615 EXCEPT WHERE ASTM A706 IS SPECIFIED FOR WELDABILITY. ALL REINFORCING STEEL SHALL BE FURNISHED AS GRADE 60.

PRESTRESSING STEEL SHALL CONFORM TO ASTM A416 GRADE 270 LOW RELAXATION 7-WIRE STRAND.

ALL BENDS AND HOOKS SHALL MEET THE REQUIREMENTS OF ASSHTO LRFD SECTION 5.10.2. ALL BEND DIMENSIONS FOR REINFORCING STEEL SHALL BE OUT-TO-OUT OF BARS. ALL PLACEMENT DIMENSIONS FOR REINFORCING STEEL SHALL BE CENTER OF BARS UNLESS NOTED OTHERWISE.

ALL REINFORCING STEEL SHALL HAVE 2 INCH CLEAR COVER, UNLESS NOTED OTHERWISE.

CHAMFER ALL EXPOSED CORNERS 3/4" UNLESS NOTED OTHERWISE.

BRIDGE BARRIERS SHALL NOT BE CAST BY THE SLIP FORM METHOD.

ALL WELDING SHALL CONFORM TO THE REQUIREMENTS OF THE AMERICAN WELDING SOCIETY BRIDGE WELDING CODE D1.5-2002, UNLESS NOTED OTHERWISE.

ALL STRUCTURAL STEEL SHALL CONFORM TO ASTM A36, UNLESS NOTED OTHERWISE.

DIMENSIONS SHALL NOT BE SCALED FROM DRAWINGS.

AC SHALL BE CONSTRUCTED BETWEEN BRIDGE CURBS AND ON THE APPROACH SLABS, AC SHALL TAPER BACK TO ROADWAY PAVEMENT GRADE IN 40'-0".

SEE GEOTECHNICAL REPORT FOR ADDITIONAL CONCRETE AND SUBGRADE REQUIREMENTS.

UTILITIES

1. ALL EXISTING FACILITIES SHALL BE STAKED PRIOR TO INSTALLATION OF DRILLED SHAFTS.

2. OVERHEAD POWER LINES SHALL BE DE-ENERGIZED AND REMOVED FOR THE INSTALLATION OF THE BRIDGE. CONTRACTOR SHALL COORDINATE WITH APS FOR REMOVAL DATE SCHEDULE.

SPECIAL INSPECTION - STRUCTURAL ONLY:

FOR SPECIAL STRUCTURAL INSPECTIONS, CONTACT GCE, 480-921-4080, PRIOR TO CONSTRUCTION:

SPECIAL INSPECTION SHALL BE PREFORMED UNDER THE DIRECT SU[ERVISION OF A STATE REGISTERED ENGINEER WHO IS FAMILIAR WITH THE STRUCTURAL DESIGN OF THIS PROJECT. THE SUPERVISING ENGINEER OF RECORD SHALL SEAL THE SPECIAL INSPECTION CERTIFICATE.

SPECIAL INSPECTION IS TO BE PROVIDED FOR THE ITEMS LISTED BELOW IN ADDITION TO THE INSPECTIONS CONDUCTED BY THE OWNER. SPECIAL INSPECTIONS ARE REQUIRED PER CHAPTER 17 OF THE INTERNATIONAL BUILDING CODE FOR THE FOLLOWING:

CONCRETE CONSTRUCTION:

1. CONCRETE

   A. DURING TAKING OF TEST SPECIMENS
   B. CONTINUOUS INSPECTION DURING THE PLACEMENT OF ALL REINFORCED CONCRETE IN DRILLED SHAFT FOUNDATIONS, ABUTMENTS, DECK,BRIDGE PARAPET AND APPROACH SLABS.
   C. CONTINUOUS INSPECTION OF BOLTS TO BE INSTALLED IN CONCRETE PRIOR TO AND DURING THE PLACEMENT OF CONCRETE AROUND BOLTS.

2. REINFORCING STEEL: INSPECTION OF IN-PLACE REINFORCING FOR CONFORMANCE PRIOR TO CLOSING OF FORMS OR THE DELIVERY OF CONCRETE TO THE JOBSITE FOR THE FOLLOWING:

   A. REINFORCING FOR ALL CONCRETE REQUIRED TO HAVE INSPECTION NOTED ABOVE.
   B. REINFORCING FOR CONCRETE DRILLED SHAFT FOUNDATIONS.

SPECIAL INSPECTION - NON-STRUCTURAL:

GEOTECHNICAL INSPECTIONS, BY OTHERS. PLEASE CONTACT XXXX AT XXX. THE DRILLED SHAFT FOUNDATION EXCAVATION AND APPROACH SLAB SUBGRADE SHALL BE INSPECTED BY GEOTECHNICAL ENGINEER PRIOR TO PLACEMENT OF REINFORCING STEEL TO VERIFY THEIR DESIGN ASSUMPTIONS, TO APPROVE THE LENGTH OF SHAFTS AND TO ACCEPT EXPOSED SUBGRADE SOILS FOR THE APPROACH SLAB.

DUTIES AND RESPONSIBILITIES OF THE SPECIAL INSPECTOR:

1. THE SPECIAL INSPECTOR SHALL OBSERVE THE WORK ASSIGNED TO BE CERTAIN IT CONFORMS TO THE APPROVED DESIGN DRAWINGS AND SPECIFICATIONS.

2. THE SPECIAL INSPECTOR IS NOT AUTHORIZED TO APPROVE DEVIATIONS FROM THE DESIGN DRAWINGS OR SPECIFICATIONS, AND ALL DEVIATIONS MUST BE APPROVED BY THE ENGINEER OF RECORD PRIOR TO THE PROCEEDING WITH THE WORK.

3. THE SPECIAL INSPECTOR SHALL FURNISH INSPECTION REPORTS TO THE BUILDING OFFICIAL AND THE ENGINEER OF RECORD. ALL DISCREPANCIES SHALL BE BROUGHT TO THE IMMEDIATE ATTENTION OF THE CONTRACTOR FOR CORRECTION, THEN, IF UNCORRECTED TOT HE ENGINEER OF RECORD AND THE BUILDING OFFICIAL.

4. UPON COMPLETION OF THE ASSIGNED WORK THE ENGINEER OF RECORD SHALL COMPLETE AND SIGN THE APPROPRIATE FORMS CERTIFYING THAT TO THE BEST OF THEIR KNOWLEDGE THE WORK IS IN CONFORMANCE WITH THE APPROVED PANS AND SPECIFICATIONS, AND THE APPLICABLE WORKMANSHIP PROVISIONS OF THE CODE.

REV.	DATE	REVISION DESCRIPTION	BY

GEORGE CAIRO ENGINEERING, INC.
STAPLEY CENTER
1630 S. STAPLEY DR., SUITE 117
MESA, ARIZONA 85204
WWW.GCAIROINC.COM

NOT FOR CONSTRUCTION
90% SUBMITTAL
09/13/24

DESIGNED BY:	B. JONES
DRAWN BY:	A. SOTO
APPROVED BY:	G. CAIRO
PROJECT No.:	BWC-43
PLOT DATE:	SEPT, 2024

BUCKEYE WATER CONSERVATION AND DRAINAGE DISTRICT
205 EAST ROOSEVELT AVENUE
BUCKEYE, ARIZONA 85326
(623) 386-2196

ROOKS ROAD BRIDGE CROSSING BWCDD MAIN CANAL & LATERAL 24 RELOCATION
PHASE 3
BUCKEYE, ARIZONA

BRIDGE NOTES

BD - 1

Z:\GCE Projects\BWC-43\dwg\PHASE 3\04_BWC-43_Phase 3_BD.dwg|jonesb 09/13/24 - 3:25pm

REUSE OF DOCUMENT: THESE PLANS & SPECIFICATIONS, AND THE IDEAS & DESIGNS INCORPORATED HEREIN, AS AN INSTRUMENT OF PROFESSIONAL SERVICE, ARE THE PROPERTY OF GCE, INC., AND ARE NOT TO BE USED, IN WHOLE OR IN PART, FOR ANY OTHER PROJECT WITHOUT THE WRITTEN AUTHORIZATION AND CONSENT OF GCE, INC. ©

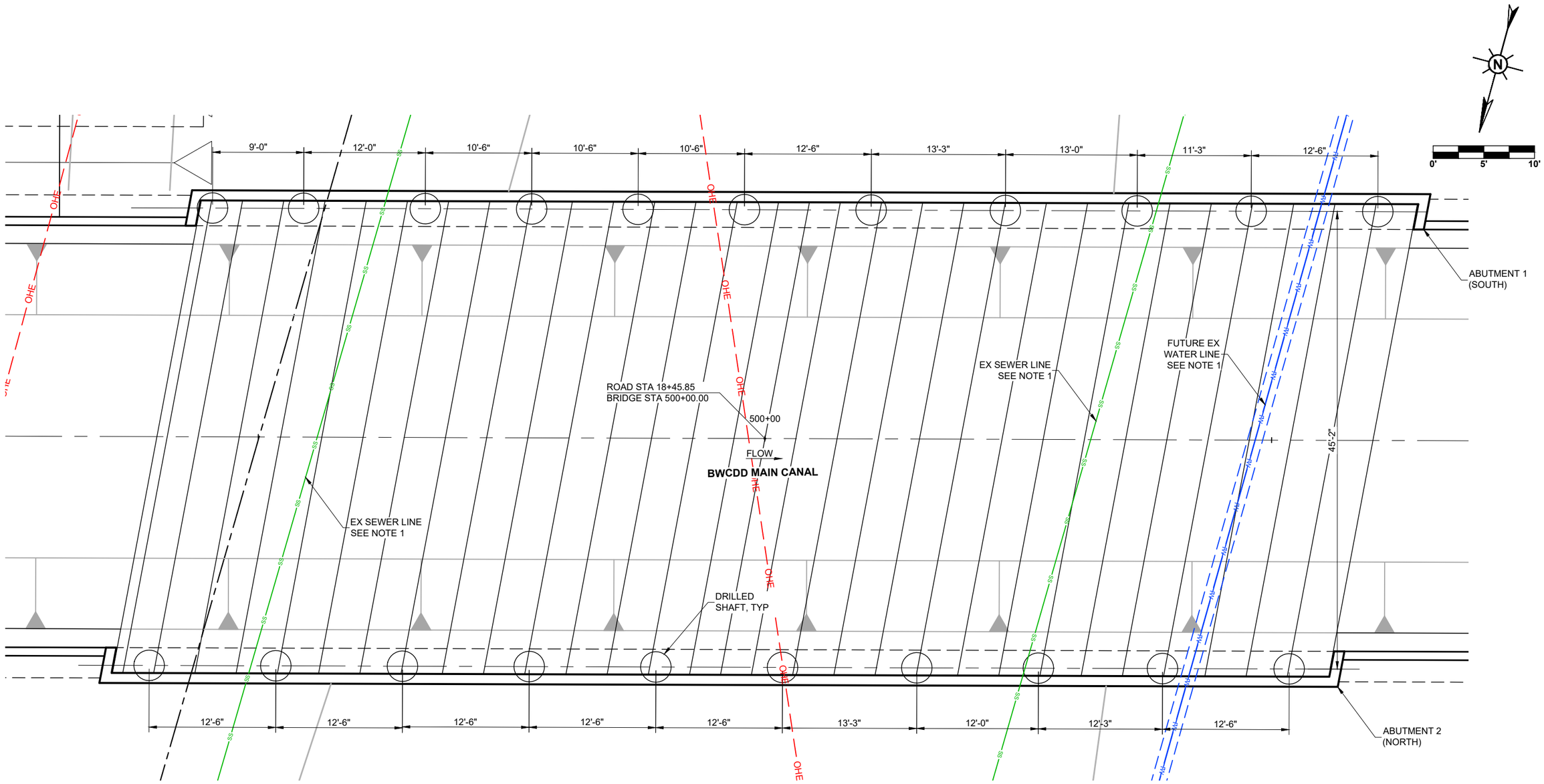

DRILLED SHAFT PLAN DETAILS

NOTE:

1. ALL UTILITIES SHALL BE STAKED AND VERIFIED PRIOR TO CONSTRUCTION OF DRILLED SHAFTS. FINAL LOCATION OF DRILLED SHAFTS SHALL BE APPROVED BY ENGINEER.

REV.	DATE	REVISION DESCRIPTION	BY

GEORGE CAIRO ENGINEERING, INC.
STAPLEY CENTER
1630 S. STAPLEY DR., SUITE 117
MESA, ARIZONA 85204
WWW.GCAIROINC.COM

NOT FOR CONSTRUCTION
90% SUBMITTAL
09/13/24

DESIGNED BY:	B. JONES
DRAWN BY:	A. SOTO
APPROVED BY:	G. CAIRO
PROJECT No.:	BWC-43
PLOT DATE:	SEPT, 2024

BUCKEYE WATER CONSERVATION AND DRAINAGE DISTRICT
205 EAST ROOSEVELT AVENUE
BUCKEYE, ARIZONA 85326
(623) 386-2196

ROOKS ROAD BRIDGE CROSSING BWCDD MAIN CANAL & LATERAL 24 RELOCATION
PHASE 3
BUCKEYE, ARIZONA

DRILLED SHAFT PLAN DETAILS

BD - 2

REUSE OF DOCUMENT: THESE PLANS & SPECIFICATIONS, AND THE IDEAS & DESIGNS INCORPORATED HEREIN, AS AN INSTRUMENT OF PROFESSIONAL SERVICE, ARE THE PROPERTY OF GCE, INC., AND ARE NOT TO BE USED, IN WHOLE OR IN PART, FOR ANY OTHER PROJECT WITHOUT THE WRITTEN AUTHORIZATION AND CONSENT OF GCE, INC. ©

Z:\GCE Projects\BWC-43\dwg\PHASE 3\04_BWC-43_Phase 3_BD.dwg|jonesb 09/13/24 - 3:25pm

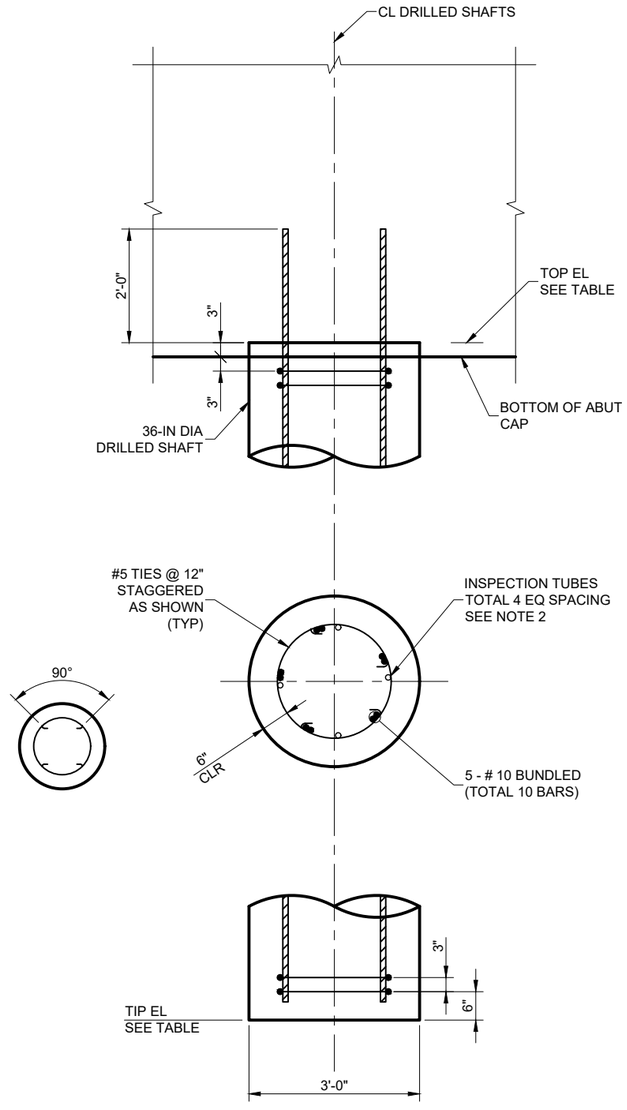

TYPICAL DRILLED SHAFT DETAIL

3/4" = 1'-0"

NOTES:

1. DRILLED SHAFT EXCAVATION IS NOT PERMITTED WITHIN 48 HOURS OF THE COMPLETION OF CONCRETE PLACEMENT OF ANY ADJACENT DRILLED SHAFT. AND ADJACENT DRILLED SHAFT IS ANY DRILLED SHAFT LOCATED 4 DIAMETER'S OR LESS MEASURED CENTER TO CENTER.
2. NUMBER AND LOCATION OF INSPECTION TUBES SHOWN IN THE SECTION TO BE INSTALLED FOR DRILLED SHAFTS CONSTRUCTED UNDER SLURRY OR WATER ONLY. SIZE, TYPE, AND DETAILS OF TUBES SHALL BE PER THE SPECIAL PROVISIONS. INSPECTION TUBES SHALL NOT BE ATTACHED TO THE LONGITUDINAL REINFORCEMENT.
3. DRILL CONFIRMATION SHAFT AT ABUTMENT 1 AS SHOWN.
4. IN THE EVENT OF A WEEK LAYER (SILT, CLAY, LOOSE SAND, ECT.) AT THE RECOMMENDED ELEVATION OF THE SHAFT BOTTOM, THE SHAFT SHALL BE EXTENDED TO BEAR ON FIRM SOIL AS DETERMINED BY THE ENGINEER.
5. CONCRETE SHALL BE PLACED IMMEDIATELY AFTER EXCAVATIONS HAS BEEN COMPLETED AND THE REINFORCING CAGE PLACED IN ITS POSITION.
6. ANY CONSTRUCTION JOINT NOT SHOWN ON THE PROJECT PLANS SHALL REQUIRE THE APPROVAL OF THE ENGINEER PRIOR TO CONSTRUCTION.
7. REINFORCING SHALL BE SUPPLIED IN ONE PIECE FULL LENGTH EXCEPT WHEN INDICATED IN THE PLANS.
8. THE CONTRACTOR SHALL VERIFY THE LOCATION OF ALL UTILITY LINES PRIOR TO DRILLING THE DRILLED SHAFTS.

REV.	DATE	REVISION DESCRIPTION	BY

GCE inc.
GEORGE CAIRO ENGINEERING, INC.
STAPLEY CENTER
1630 S. STAPLEY DR., SUITE 117
MESA, ARIZONA 85204
WWW.GCAIROINC.COM

NOT FOR CONSTRUCTION
90% SUBMITTAL
09/13/24

DESIGNED BY:	B. JONES
DRAWN BY:	A. SOTO
APPROVED BY:	G. CAIRO
PROJECT No.:	BWC-43
PLOT DATE:	SEPT, 2024

BWCDD
BUCKEYE WATER CONSERVATION AND DRAINAGE DISTRICT
205 EAST ROOSEVELT AVENUE
BUCKEYE, ARIZONA 85326
(623) 386-2196

ROOKS ROAD BRIDGE CROSSING BWCDD MAIN CANAL & LATERAL 24 RELOCATION PHASE 3
BUCKEYE, ARIZONA

FOUNDATION DETAILS

BD - 3

REUSE OF DOCUMENT: THESE PLANS & SPECIFICATIONS, AND THE IDEAS & DESIGNS INCORPORATED HEREIN, AS AN INSTRUMENT OF PROFESSIONAL SERVICE, ARE THE PROPERTY OF GCE, INC., AND ARE NOT TO BE USED, IN WHOLE OR IN PART, FOR ANY OTHER PROJECT WITHOUT THE WRITTEN AUTHORIZATION AND CONSENT OF GCE, INC. ©

GCE PROJECT No.: BWC
BWCDD MAIN CANAL
BWCDD PROJECT No.: BWC-2149
Z:\GCE Projects\BWC-43\dwg\PHASE 3\04_BWC-43_Phase 3_ BD.dwg|jonesb 09/13/24 - 3:25pm

NOTES:

1. WINGWALL AND BACKWALL SHALL BE CONSTRUCTED AFTER PLACEMENT OF VOIDED SLABS.
2. VERIFY TOP OF CAP ELEVATION PRIOR TO SETTING OF GIRDERS.
3. EXISTING, PROPOSED AND FUTURE UTILITIES NOT SHOWN FOR CLARITY.
4. ALL ELEVATIONS ARE TAKEN AT CL BRG ABUT UNLESS NOTED OTHERWISE.
5. SPLICE LENGTH FOR LONGITUDINAL BARS IS AS FOLLOWS:
   #9 TOP : 7'-6"
   #9 BOTTOM : 5'-6"

* ELEVATIONS TAKEN AT FRONT FACE OF BACKWALL AND SHALL MATCH ELEVATIONS ON BRIDGE DECK.

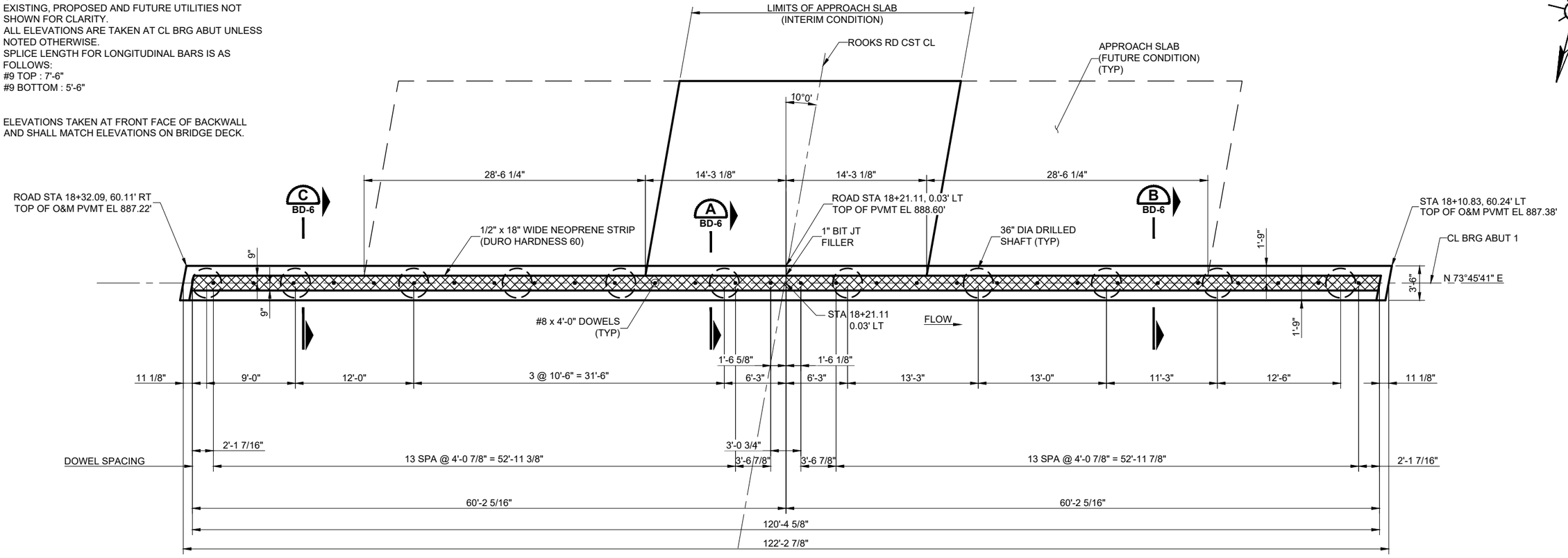

ABUTMENT 1 (SOUTH) - PLAN

3/16" = 1'-0"

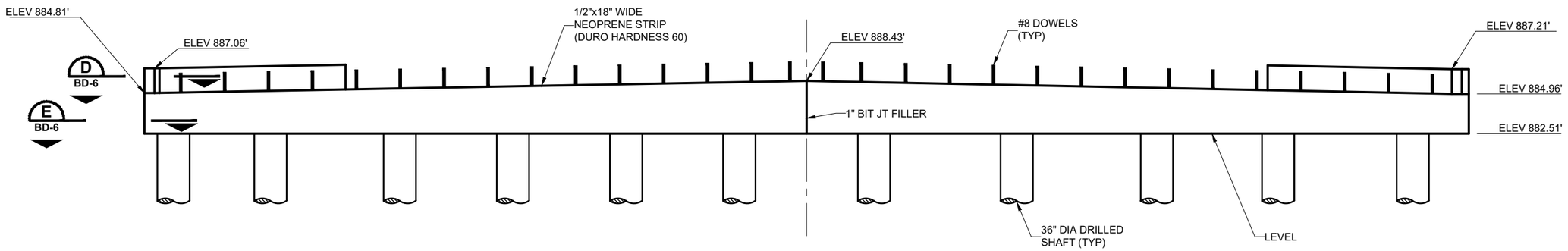

ABUTMENT 1 (SOUTH) - ELEVATION

3/16" = 1'-0"

REV.	DATE	REVISION DESCRIPTION	BY

GCE inc.
GEORGE CAIRO ENGINEERING, INC.
STAPLEY CENTER
1630 S. STAPLEY DR., SUITE 117
MESA, ARIZONA 85204
WWW.GCAIROINC.COM

NOT FOR CONSTRUCTION
90% SUBMITTAL
09/13/24

DESIGNED BY:	B. JONES
DRAWN BY:	A. SOTO
APPROVED BY:	G. CAIRO
PROJECT No.:	BWC-43
PLOT DATE:	SEPT, 2024

BWCDD

BUCKEYE WATER CONSERVATION AND DRAINAGE DISTRICT
205 EAST ROOSEVELT AVENUE
BUCKEYE, ARIZONA 85326
(623) 386-2196

ROOKS ROAD BRIDGE CROSSING BWCDD MAIN CANAL & LATERAL 24 RELOCATION PHASE 3
BUCKEYE, ARIZONA

ABUTMENT 1 (SOUTH) PLAN AND ELEVATION

BD - 4

GCE PROJECT No.: BWC
BWCDD MAIN CANAL
BWCDD PROJECT No.: BWC-2149

Z:\GCE Projects\BWC-43\dwg\PHASE 3\04_BWC-43_Phase 3_BD.dwg|jonesb 09/13/24 - 3:25pm

REUSE OF DOCUMENT: THESE PLANS & SPECIFICATIONS, AND THE IDEAS & DESIGNS INCORPORATED HEREIN, AS AN INSTRUMENT OF PROFESSIONAL SERVICE, ARE THE PROPERTY OF GCE, INC., AND ARE NOT TO BE USED, IN WHOLE OR IN PART, FOR ANY OTHER PROJECT WITHOUT THE WRITTEN AUTHORIZATION AND CONSENT OF GCE, INC. ©

NOTES:

1. WINGWALL AND BACKWALL SHALL BE CONSTRUCTED AFTER PLACEMENT OF VOIDED SLABS.
2. VERIFY TOP OF CAP ELEVATION PRIOR TO SETTING OF GIRDERS.
3. EXISTING, PROPOSED AND FUTURE UTILITIES NOT SHOWN FOR CLARITY.
4. ALL ELEVATIONS ARE TAKEN AT CL BRG ABUT UNLESS NOTED OTHERWISE.
5. SPLICE LENGTH FOR LONGITUDINAL BARS IS AS FOLLOWS:
   #9 TOP : 7'-6"
   #9 BOTTOM : 5'-6"

* ELEVATIONS TAKEN AT FRONT FACE OF BACKWALL AND SHALL MATCH ELEVATIONS ON BRIDGE DECK.

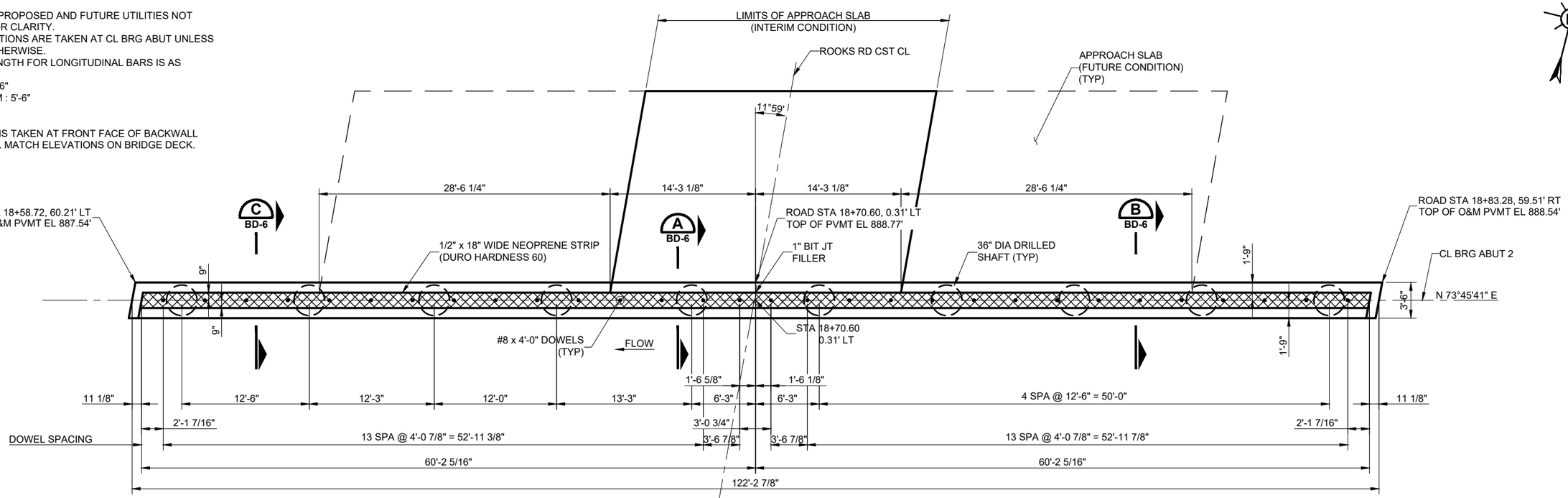

ABUTMENT 2 (NORTH) - PLAN

3/16" = 1'-0"

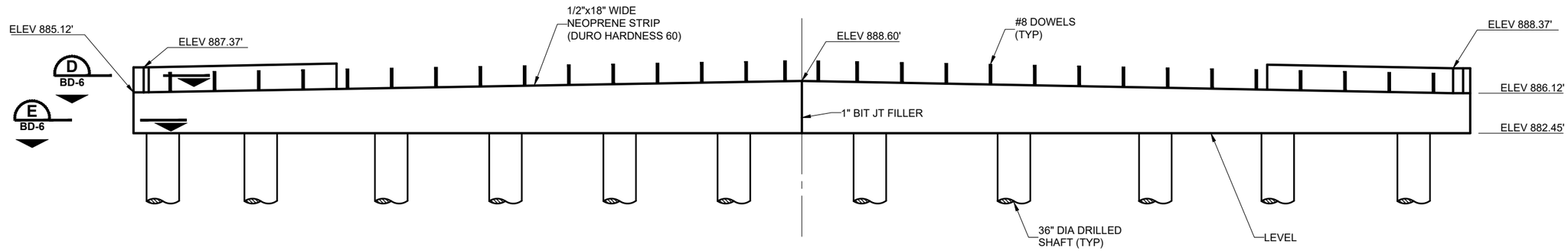

ABUTMENT 2 (NORTH) - ELEVATION

3/16" = 1'-0"

REV.	DATE	REVISION DESCRIPTION	BY

GCE Inc.
GEORGE CAIRO ENGINEERING, INC.
STAPLEY CENTER
1630 S. STAPLEY DR., SUITE 117
MESA, ARIZONA 85204
WWW.GCAIROINC.COM

NOT FOR CONSTRUCTION
90% SUBMITTAL
09/13/24

DESIGNED BY:	B. JONES
DRAWN BY:	A. SOTO
APPROVED BY:	G. CAIRO
PROJECT No.:	BWC-43
PLOT DATE:	SEPT, 2024

BUCKEYE WATER CONSERVATION AND DRAINAGE DISTRICT
205 EAST ROOSEVELT AVENUE
BUCKEYE, ARIZONA 85326
(623) 386-2196

ROOKS ROAD BRIDGE CROSSING BWCDD MAIN CANAL & LATERAL 24 RELOCATION PHASE 3
BUCKEYE, ARIZONA

ABUTMENT 2 (NORTH) PLAN AND ELEVATION

BD - 5

REUSE OF DOCUMENT: THESE PLANS & SPECIFICATIONS, AND THE IDEAS & DESIGNS INCORPORATED HEREIN, AS AN INSTRUMENT OF PROFESSIONAL SERVICE, ARE THE PROPERTY OF GCE, INC., AND ARE NOT TO BE USED, IN WHOLE OR IN PART, FOR ANY OTHER PROJECT WITHOUT THE WRITTEN AUTHORIZATION AND CONSENT OF GCE, INC. ©

Z:\GCE Projects\BWC-43\dwg\PHASE 3\04_BWC-43_Phase 3_BD.dwg|jonesb 09/13/24 - 3:25pm

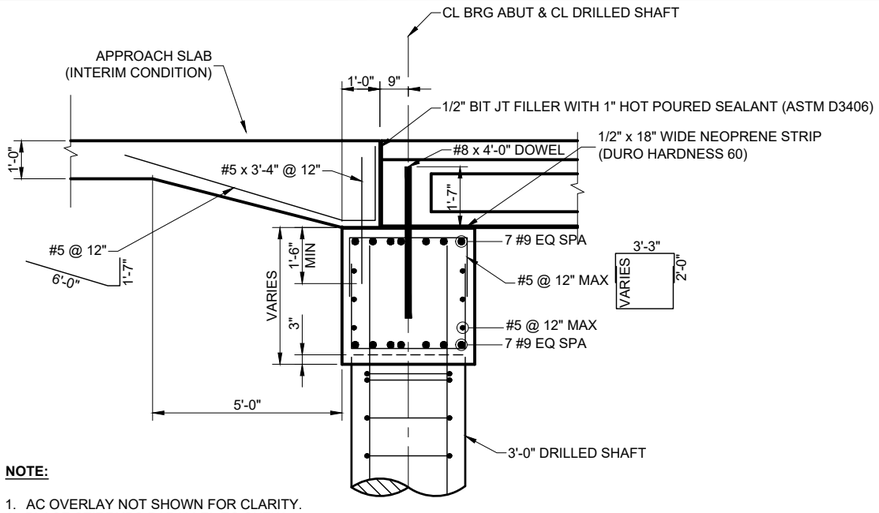

NOTE:

1. AC OVERLAY NOT SHOWN FOR CLARITY.
2. PLACE STIRRUPS PARALLEL TO SKEW.

SECTION A
1/2" = 1'-0" BD-4 BD-5

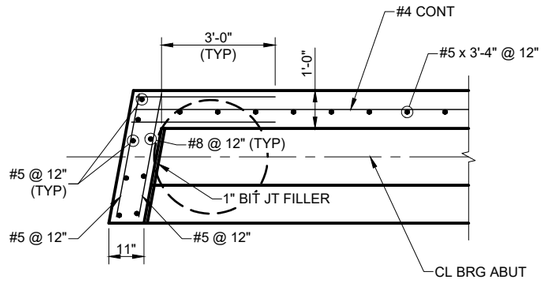

SECTION D (SIMILAR)
1/2" = 1'-0" BD-4 BD-5

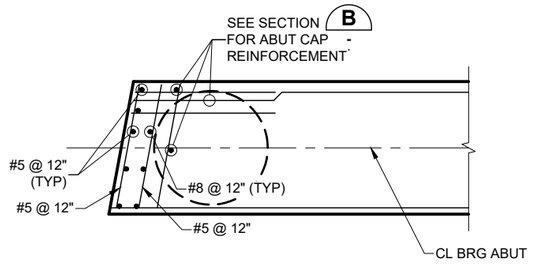

SECTION E (SIMILAR)
1/2" = 1'-0" BD-4 BD-5

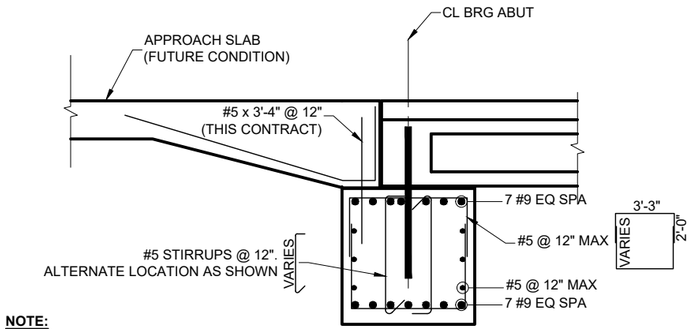

NOTE:

1. SEE SECTION A FOR ADD'L INFORMATION.
2. AC OVERLAY NOT SHOWN FOR CLARITY.

SECTION B
1/2" = 1'-0" BD-4 BD-5

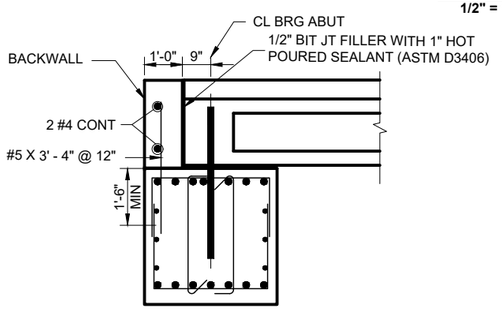

SECTION C
1/2" = 1'-0" BD-4 BD-5

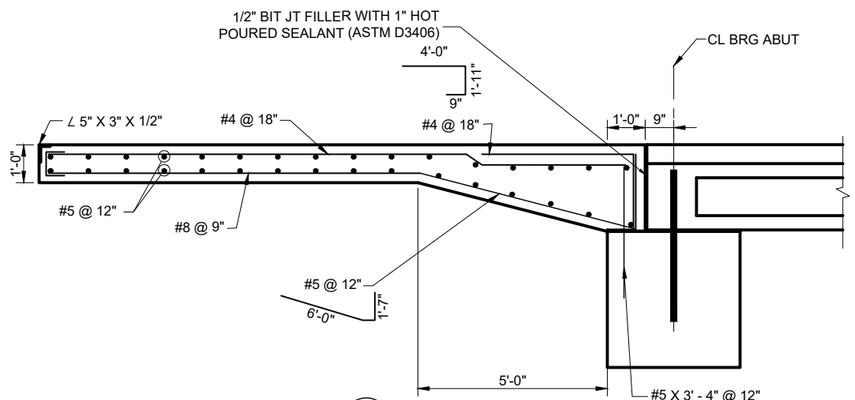

SECTION G
1/2" = 1'-0"

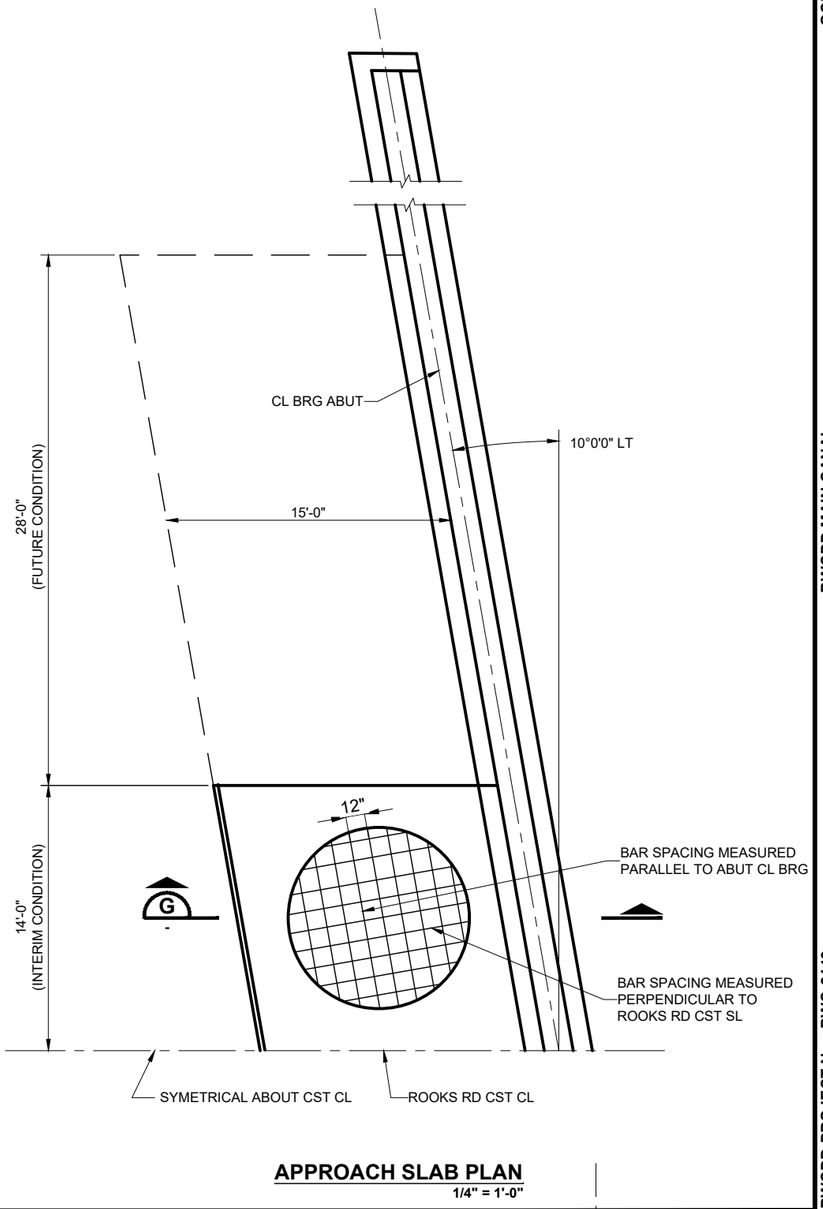

APPROACH SLAB PLAN
1/4" = 1'-0"

REV.	DATE	REVISION DESCRIPTION	BY

GCE inc.
GEORGE CAIRO ENGINEERING, INC.
STAPLEY CENTER
1630 S. STAPLEY DR., SUITE 117
MESA, ARIZONA 85204
WWW.GCAIROINC.COM

NOT FOR CONSTRUCTION
90% SUBMITTAL
09/13/24

DESIGNED BY:	B. JONES
DRAWN BY:	A. SOTO
APPROVED BY:	G. CAIRO
PROJECT No.:	BWC-43
PLOT DATE:	SEPT, 2024

BWCDD
Buckeye Water Conservation & Drainage District

BUCKEYE WATER CONSERVATION AND DRAINAGE DISTRICT
205 EAST ROOSEVELT AVENUE
BUCKEYE, ARIZONA 85326
(623) 386-2196

ROOKS ROAD BRIDGE CROSSING BWCDD MAIN CANAL & LATERAL 24 RELOCATION PHASE 3
BUCKEYE, ARIZONA

ABUTMENT DETAILS

BD - 6

Z:\GCE Projects\BWC-43\dwg\PHASE 3\04_BWC-43_Phase 3_BD.dwg|jonesb 09/13/24 - 3:25pm

REUSE OF DOCUMENT: THESE PLANS & SPECIFICATIONS, AND THE IDEAS & DESIGNS INCORPORATED HEREIN, AS AN INSTRUMENT OF PROFESSIONAL SERVICE, ARE THE PROPERTY OF GCE, INC., AND ARE NOT TO BE USED, IN WHOLE OR IN PART, FOR ANY OTHER PROJECT WITHOUT THE WRITTEN AUTHORIZATION AND CONSENT OF GCE, INC. ©

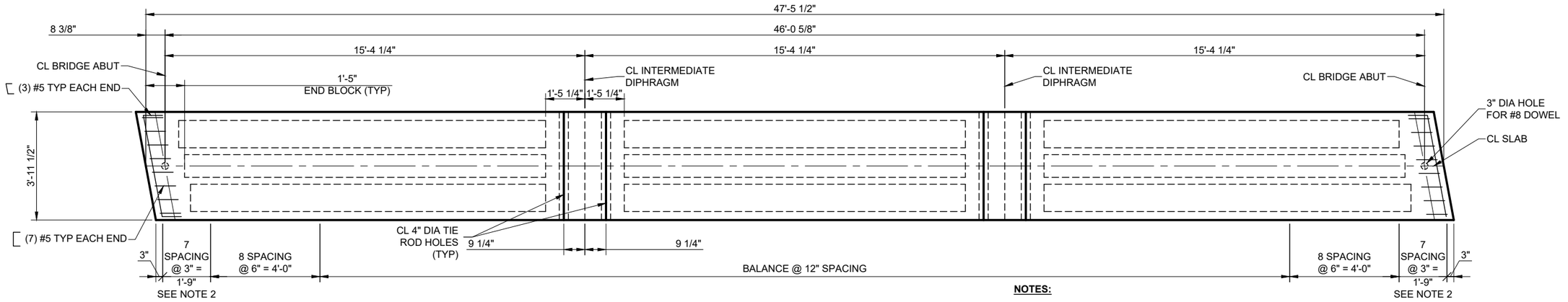

VOIDED SLAB PLAN - TYPE 1 - 48"

1/2" = 1'-0"

NOTES:

1. TYPE 1 SLAB SHOWN. TYP 2 SLAB HAS ONE SINGLE TIE ROD HOLE LOCATED AT THE CL OF EACH INTERMEDIATE DIAPHRAGM.
2. SPLAY STIRRUPS AS NECESSARY.

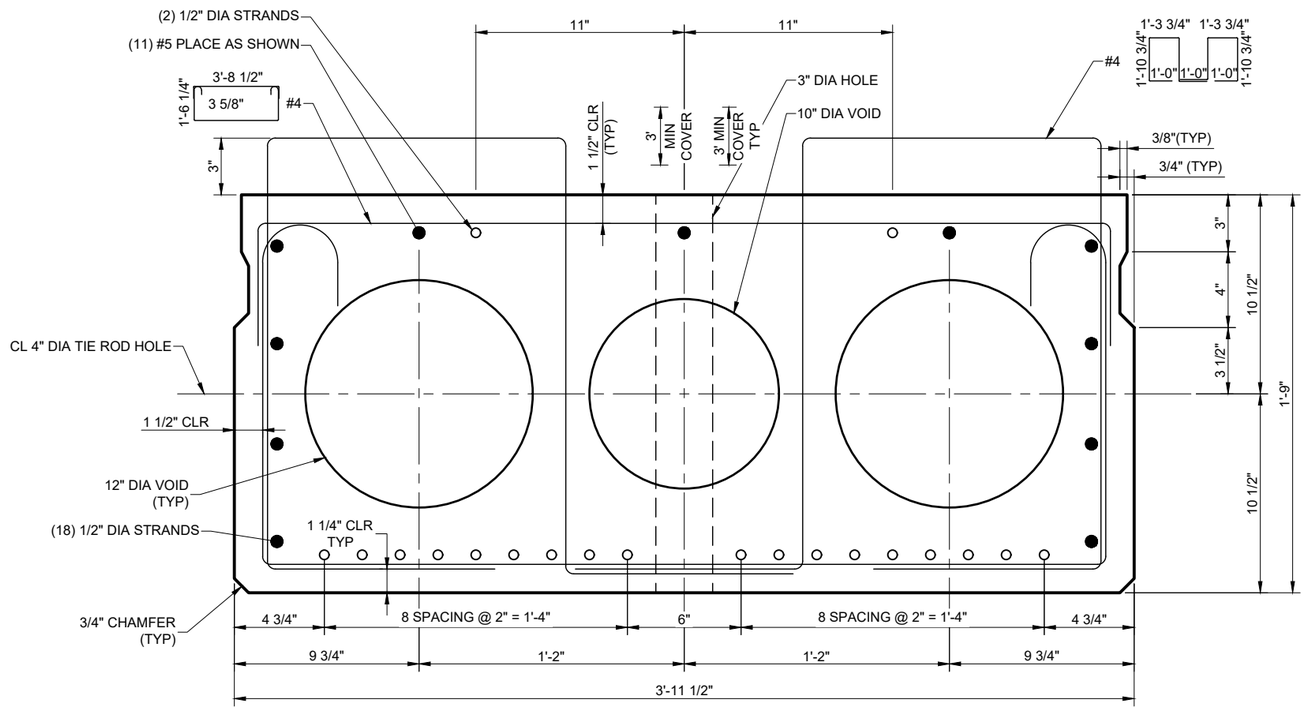

AASHTO VOIDED INTERIOR SLAB SECTION - 48"

3" = 1'-0"

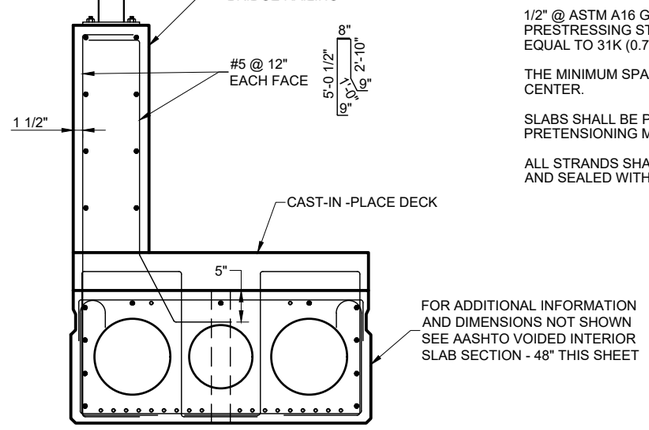

AASHTO VOIDED EDGE SLAB SECTION - 48"

3" = 1'-0"

PRESTRESSED VOIDED SLAB NOTES:

CONCRETE:

f'c = 6,000 PSI CONCRETE STRENGTH @ 28 DAYS

f'c = 5,000 PSI CONCRETE STRENGTH @ TIME OF INITIAL PRESTRESS TRANSFER.

TOP SURFACE SHALL BE INTENTIONALLY ROUGHENED TO AN APPROXIMATE AMPLITUDE OF 1/4"

PRESTRESSING FORCE:

INITIAL FORCE Pi = 620K INITIAL FORCE PER SLAB AT RELEASE.

WORKING FORCE Pw = 551K TOTAL FORCE REMAINING PER SLAB AFTER ALL LOSSES.

STRAND:

1/2" @ ASTM A16 GRADE 270 7-WIRE LOW RELAXATION PRESTRESSING STRAND WITH INITIAL STAND TENSION EQUAL TO 31K (0.75 fs), fs = 270 ksi.

THE MINIMUM SPACING FOR STRANDS IS 2" ON CENTER.

SLABS SHALL BE PRESTRESSED BY THE PRETENSIONING METHOD ONLY.

ALL STRANDS SHALL BE CUT FLUSH WITH SLAB END AND SEALED WITH EPOXY GROUT.

REV.	DATE	REVISION DESCRIPTION	BY

GCE inc.
GEORGE CAIRO ENGINEERING, INC.
STAPLEY CENTER
1630 S. STAPLEY DR., SUITE 117
MESA, ARIZONA 85204
WWW.GCAIROINC.COM

NOT FOR CONSTRUCTION
90% SUBMITTAL
09/13/24

DESIGNED BY:	B. JONES
DRAWN BY:	A. SOTO
APPROVED BY:	G. CAIRO
PROJECT No.:	BWC-43
PLOT DATE:	SEPT, 2024

BWCDD
Buckeye Water Conservation & Drainage District

BUCKEYE WATER CONSERVATION AND DRAINAGE DISTRICT
205 EAST ROOSEVELT AVENUE
BUCKEYE, ARIZONA 85326
(623) 386-2196

ROOKS ROAD BRIDGE CROSSING BWCDD MAIN CANAL & LATERAL 24 RELOCATION PHASE 3

BUCKEYE, ARIZONA

BRIDGE GIRDER TYPE 1 DETAILS

BD - 7

REUSE OF DOCUMENT: THESE PLANS & SPECIFICATIONS, AND THE IDEAS & DESIGNS INCORPORATED HEREIN, AS AN INSTRUMENT OF PROFESSIONAL SERVICE, ARE THE PROPERTY OF GCE, INC., AND ARE NOT TO BE USED, IN WHOLE OR IN PART, FOR ANY OTHER PROJECT WITHOUT THE WRITTEN AUTHORIZATION AND CONSENT OF GCE, INC. ©

Z:\GCE Projects\BWC-43\dwg\PHASE 3\04_BWC-43_Phase 3_BD.dwg|jonesb 09/13/24 - 3:25pm

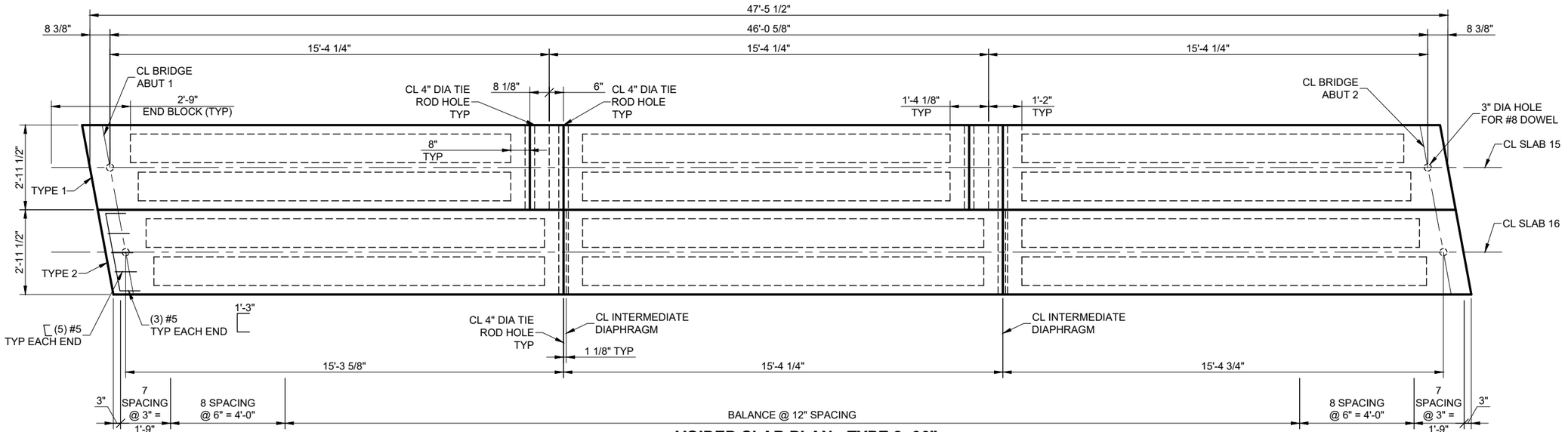

VOIDED SLAB PLAN - TYPE 2 -36"

1/2" = 1'-0"

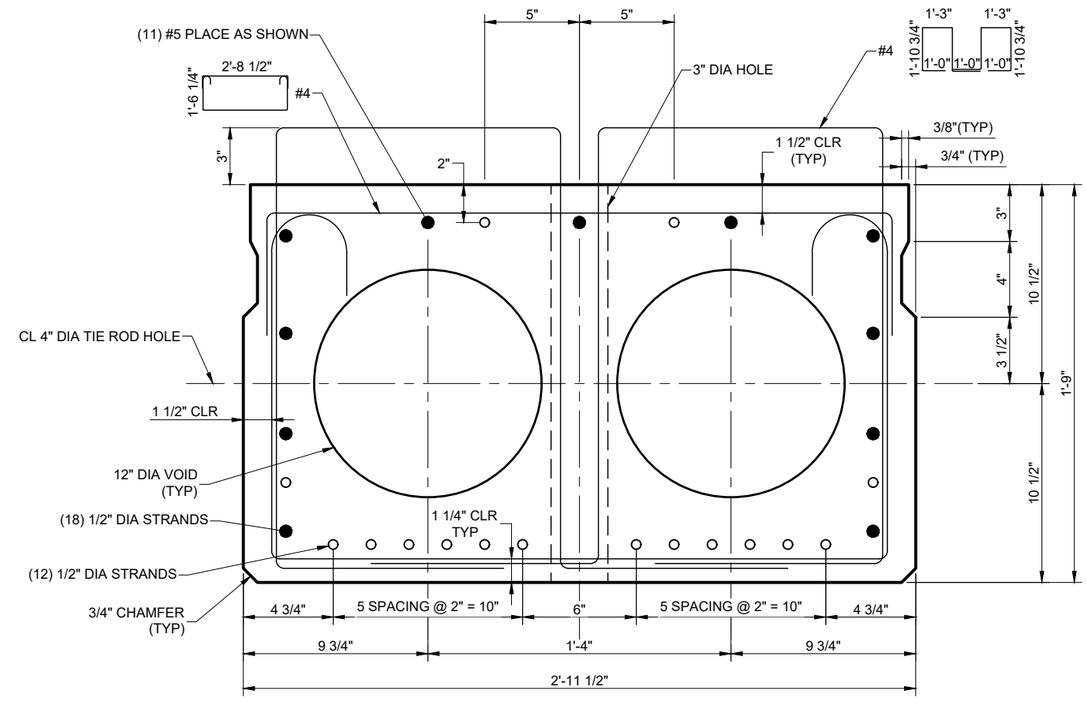

AASHTO VOIDED INTERIOR SLAB SECTION - 36"

3" = 1'-0"

PRESTRESSED VOIDED SLAB NOTES:

CONCRETE:

f'c = 6,000 PSI CONCRETE STRENGTH @ 28 DAYS

f'c = 5,000 PSI CONCRETE STRENGTH @ TIME OF INITIAL PRESTRESS TRANSFER.

TOP SURFACE SHALL BE INTENTIONALLY ROUGHENED TO AN APPROXIMATE AMPLITUDE OF 1/4"

PRESTRESSING FORCE:

INITIAL FORCE Pi = 620K INITIAL FORCE PER SLAB AT RELEASE.

WORKING FORCE Pw = 551K TOTAL FORCE REMAINING PER SLAB AFTER ALL LOSSES.

STRAND:

1/2" @ ASTM A16 GRADE 270 7-WIRE LOW RELAXATION PRESTRESSING STRAND WITH INITIAL STAND TENSION EQUAL TO 31K (0.75 fs), fs = 270 ksi.

THE MINIMUM SPACING FOR STRANDS IS 2" ON CENTER.

SLABS SHALL BE PRESTRESSED BY THE PRETENSIONING METHOD ONLY.

ALL STRANDS SHALL BE CUT FLUSH WITH SLAB END AND SEALED WITH EPOXY GROUT.

REV.	DATE	REVISION DESCRIPTION	BY

GCE Inc.
GEORGE CAIRO ENGINEERING, INC.
STAPLEY CENTER
1630 S. STAPLEY DR., SUITE 117
MESA, ARIZONA 85204
WWW.GCAIROINC.COM

NOT FOR CONSTRUCTION
90% SUBMITTAL
09/13/24

DESIGNED BY:	B. JONES
DRAWN BY:	A. SOTO
APPROVED BY:	G. CAIRO
PROJECT No.:	BWC-43
PLOT DATE:	SEPT, 2024

BUCKEYE WATER CONSERVATION AND DRAINAGE DISTRICT
205 EAST ROOSEVELT AVENUE
BUCKEYE, ARIZONA 85326
(623) 386-2196

ROOKS ROAD BRIDGE CROSSING BWCDD MAIN CANAL & LATERAL 24 RELOCATION PHASE 3
BUCKEYE, ARIZONA

BRIDGE GIRDER TYPE 2 DETAILS

BD - 8

REUSE OF DOCUMENT: THESE PLANS & SPECIFICATIONS, AND THE IDEAS & DESIGNS INCORPORATED HEREIN, AS AN INSTRUMENT OF PROFESSIONAL SERVICE, ARE THE PROPERTY OF GCE, INC., AND ARE NOT TO BE USED, IN WHOLE OR IN PART, FOR ANY OTHER PROJECT WITHOUT THE WRITTEN AUTHORIZATION AND CONSENT OF GCE, INC. ©

Z:\GCE Projects\BWC-43\dwg\PHASE 3\04_BWC-43_ Phase 3_BD.dwg|jonesb 09/13/24 - 3:25pm

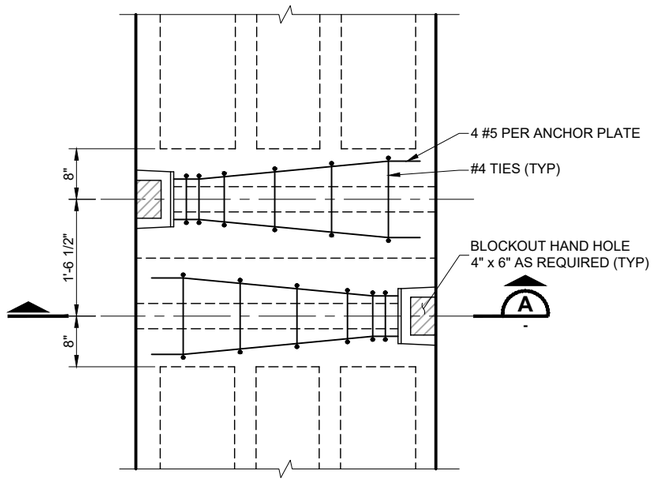

INTERMEDIATE DIAPHRAGM
ANCHOR REINFORCING PLAN (TYPE 1)
1" = 1'-0"

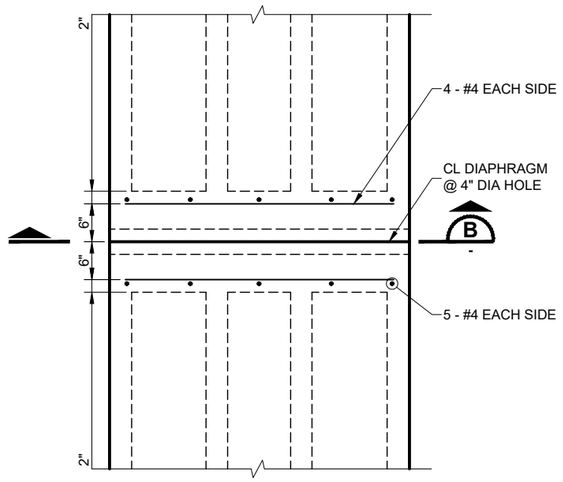

INTERMEDIATE DIAPHRAGM
ANCHOR REINFORCING PLAN (TYPE 2)
1" = 1'-0"

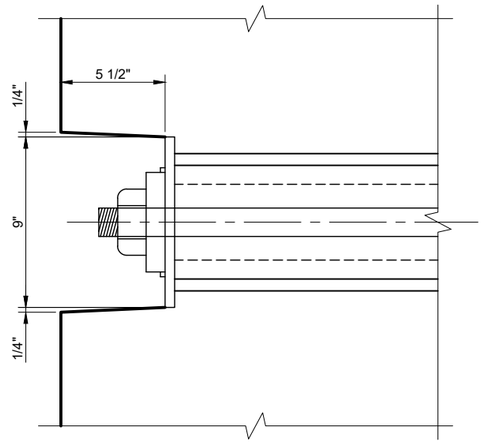

ANCHORAGE RECESS DETAIL - PLAN
3" = 1'-0"

TURN OF NUT METHOD	
NO. OF BEAMS CONNECTED	3
NO. OF TURNS REQUIRED	7/8

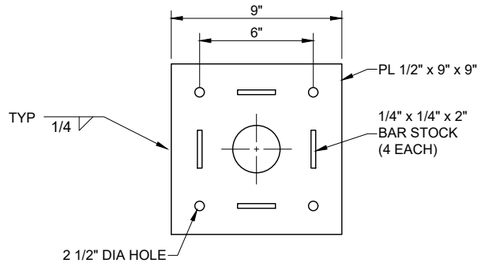

ANCHOR PLATE DETAIL
3" = 1'-0"

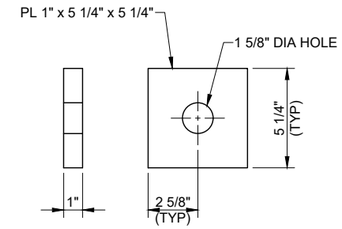

BEARING WASH DETAIL
3" = 1'-0"

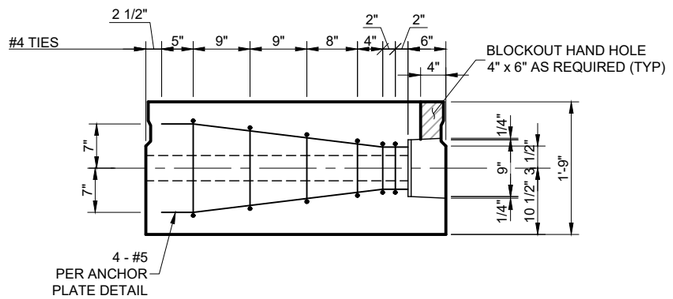

SECTION A
1" = 1'-0"

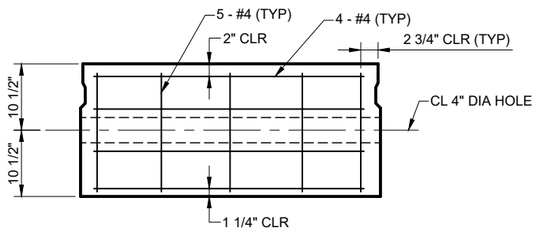

SECTION B
1" = 1'-0"

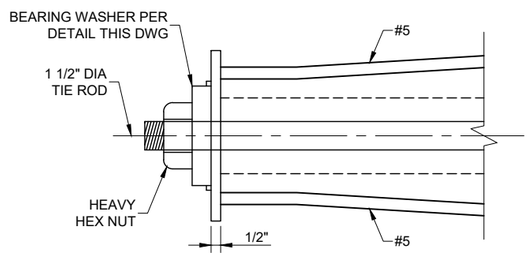

TRAVERSE TIE ROD
3" = 1'-0"

REV.	DATE	REVISION DESCRIPTION	BY

GCE inc.
GEORGE CAIRO ENGINEERING, INC.
STAPLEY CENTER
1630 S. STAPLEY DR., SUITE 117
MESA, ARIZONA 85204
WWW.GCAIROINC.COM

NOT FOR CONSTRUCTION
90% SUBMITTAL
09/13/24

DESIGNED BY:	B. JONES
DRAWN BY:	A. SOTO
APPROVED BY:	G. CAIRO
PROJECT No.:	BWC-43
PLOT DATE:	SEPT, 2024

BWCDD
Buckeye Water Conservation & Drainage District

BUCKEYE WATER CONSERVATION AND DRAINAGE DISTRICT
205 EAST ROOSEVELT AVENUE
BUCKEYE, ARIZONA 85326
(623) 386-2196

ROOKS ROAD BRIDGE CROSSING BWCDD MAIN CANAL & LATERAL 24 RELOCATION PHASE 3
BUCKEYE, ARIZONA

TRANSVERSE ANCHOR DETAILS

BD - 9

REUSE OF DOCUMENT: THESE PLANS & SPECIFICATIONS, AND THE IDEAS & DESIGNS INCORPORATED HEREIN, AS AN INSTRUMENT OF PROFESSIONAL SERVICE, ARE THE PROPERTY OF GCE, INC., AND ARE NOT TO BE USED, IN WHOLE OR IN PART, FOR ANY OTHER PROJECT WITHOUT THE WRITTEN AUTHORIZATION AND CONSENT OF GCE, INC. ©

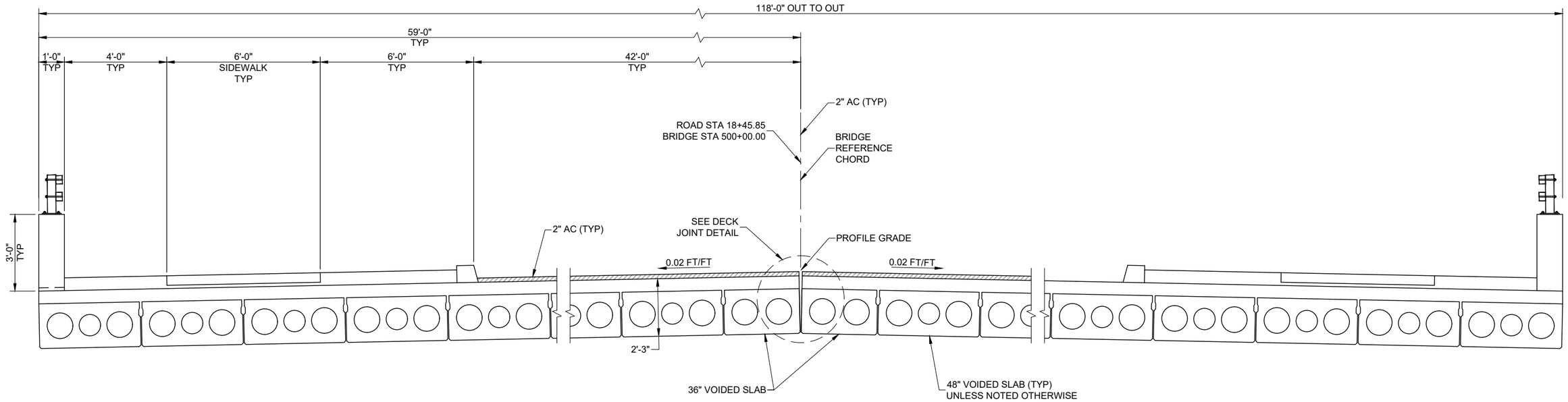

TYPICAL DECK SECTION

1/2" = 1'-0"

REV.	DATE	REVISION DESCRIPTION	BY

GCE inc.
GEORGE CAIRO ENGINEERING, INC.
STAPLEY CENTER
1630 S. STAPLEY DR., SUITE 117
MESA, ARIZONA 85204
WWW.GCAIROINC.COM

NOT FOR CONSTRUCTION
90% SUBMITTAL
09/13/24

DESIGNED BY:	B. JONES
DRAWN BY:	A. SOTO
APPROVED BY:	G. CAIRO
PROJECT No.:	BWC-43
PLOT DATE:	SEPT, 2024

BWCDD
Buckeye Water Conservation & Drainage District

BUCKEYE WATER CONSERVATION AND DRAINAGE DISTRICT
205 EAST ROOSEVELT AVENUE
BUCKEYE, ARIZONA 85326
(623) 386-2196

ROOKS ROAD BRIDGE CROSSING BWCDD MAIN CANAL & LATERAL 24 RELOCATION PHASE 3

BUCKEYE, ARIZONA

ROAD BRIDGE TYPICAL DECK SECTION

BD - 10

REUSE OF DOCUMENT: THESE PLANS & SPECIFICATIONS, AND THE IDEAS & DESIGNS INCORPORATED HEREIN, AS AN INSTRUMENT OF PROFESSIONAL SERVICE, ARE THE PROPERTY OF GCE, INC., AND ARE NOT TO BE USED, IN WHOLE OR IN PART, FOR ANY OTHER PROJECT WITHOUT THE WRITTEN AUTHORIZATION AND CONSENT OF GCE, INC. ©

Z:\GCE Projects\BWC-43\dwg\PHASE 3\04_BWC-43_ Phase 3_BD.dwg|jonesb 09/13/24 - 3:25pm

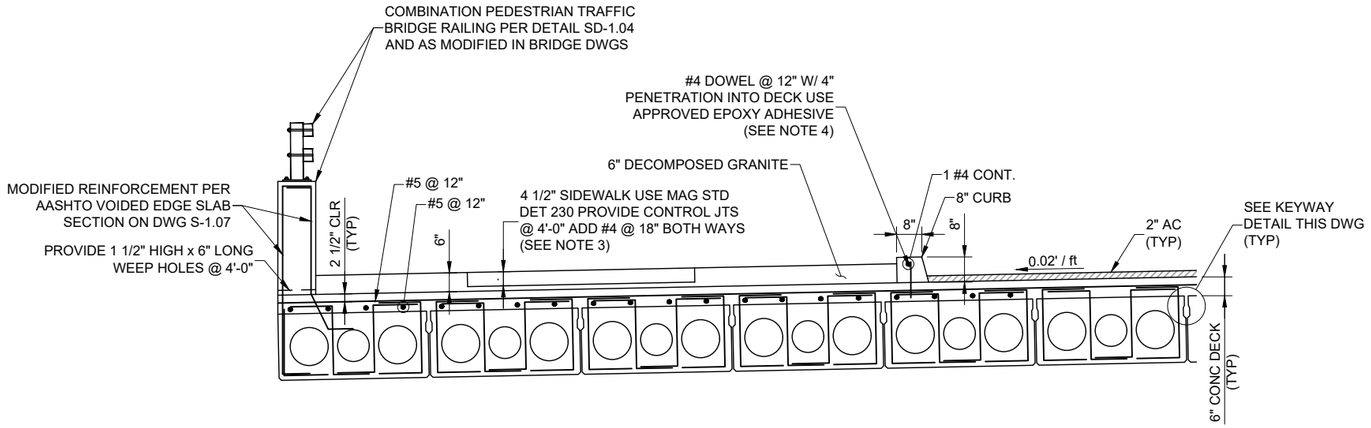

PARTIAL DECK SECTION
1/2" = 1'-0"

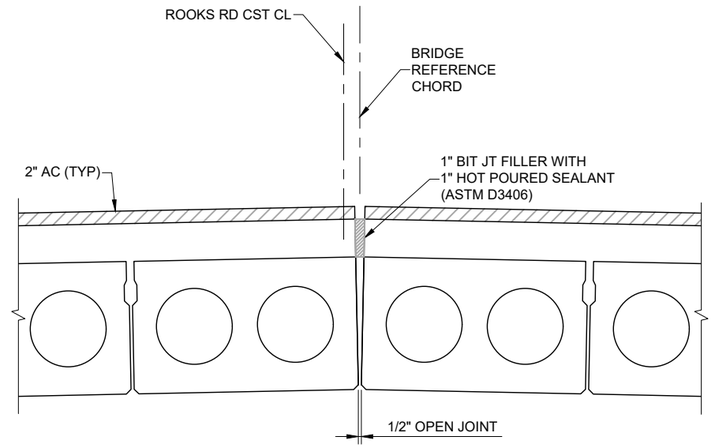

DECK JOINT DETAIL
1" = 1'-0"

NOTES:

1. PGL IS TO THE TOP OF THE CONCRETE DECK AND NOT THE TOP OF THE 2" AC OVERLAY.
2. SEE DWG S-1.10 FOR MIN LAP SPLICE REQUIREMENTS.
3. THE REINFORCING STEEL IN THE SIDEWALK IS INCLUDED IN THE PER SQUARE FOOT COST OF THE SIDEWALK.
4. NO SEPARATE PAYMENT WILL BE MADE FOR THE DOWELS. THE COST OF THE DOWELS IS INCIDENTAL TO OTHER BID ITEMS.

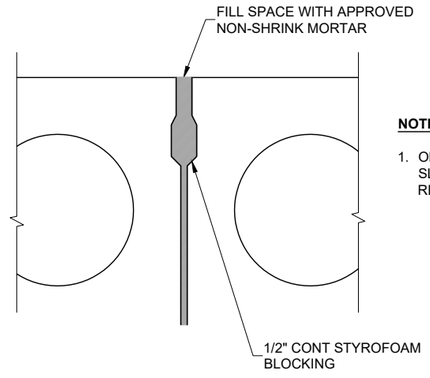

NOTE:

1. OMIT KEYWAY AT OUTSIDE FACE OF EXTERIOR SLABS AND THE SIDE ADJACENT TO BRIDGE REFERENCE CHORD FOR SLABS 15 AND 16.

DECK JOINT DETAIL
4" = 1'-0"

REV.	DATE	REVISION DESCRIPTION	BY

GCE inc.
GEORGE CAIRO ENGINEERING, INC.
STAPLEY CENTER
1630 S. STAPLEY DR., SUITE 117
MESA, ARIZONA 85204
WWW.GCAIROINC.COM

NOT FOR CONSTRUCTION
90% SUBMITTAL
09/13/24

DESIGNED BY:	B. JONES
DRAWN BY:	A. SOTO
APPROVED BY:	G. CAIRO
PROJECT No.:	BWC-43
PLOT DATE:	SEPT, 2024

BWCDD
Buckeye Water Conservation & Drainage District

BUCKEYE WATER CONSERVATION AND DRAINAGE DISTRICT
205 EAST ROOSEVELT AVENUE
BUCKEYE, ARIZONA 85326
(623) 386-2196

ROOKS ROAD BRIDGE CROSSING BWCDD MAIN CANAL & LATERAL 24 RELOCATION PHASE 3
BUCKEYE, ARIZONA

ROAD BRIDGE TYPICAL DECK SECTION

BD - 11

REUSE OF DOCUMENT: THESE PLANS & SPECIFICATIONS, AND THE IDEAS & DESIGNS INCORPORATED HEREIN, AS AN INSTRUMENT OF PROFESSIONAL SERVICE, ARE THE PROPERTY OF GCE, INC., AND ARE NOT TO BE USED, IN WHOLE OR IN PART, FOR ANY OTHER PROJECT WITHOUT THE WRITTEN AUTHORIZATION AND CONSENT OF GCE, INC. ©

Z:\GCE Projects\BWC-43\dwg\PHASE 3\04_BWC-43_ Phase 3_ BD.dwg|jonesb 09/13/24 - 3:25pm

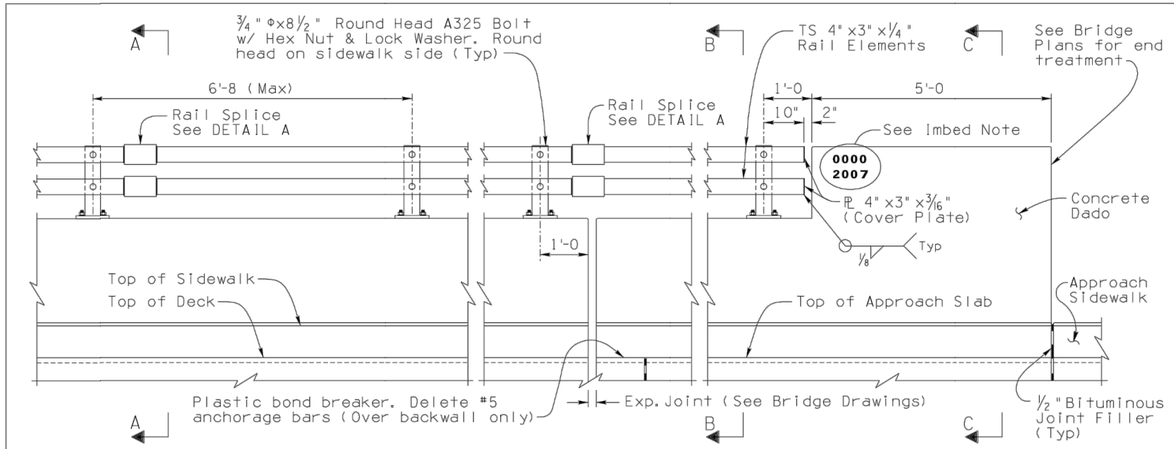

TYPICAL PANEL ELEVATION | ELEVATION AT EXP. JT. | ELEVATION AT END POST

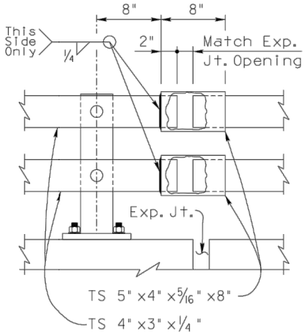

DETAIL A
(Exp. Splice Shown)

NOTE:
For rail splices not at expansion joints, provide 1 inch gap and weld both ends of splice tube

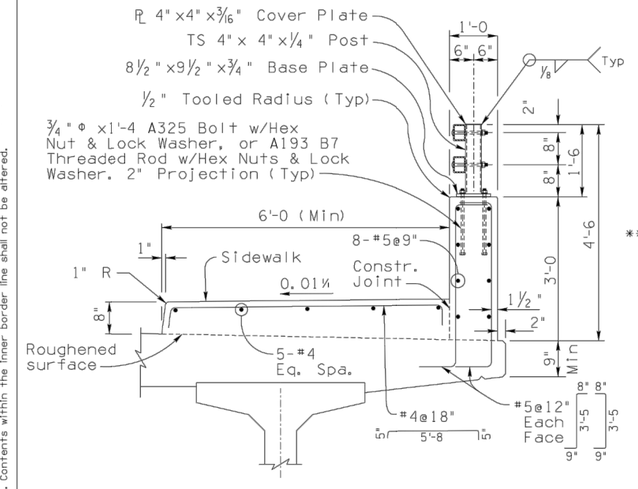

SECTION A-A

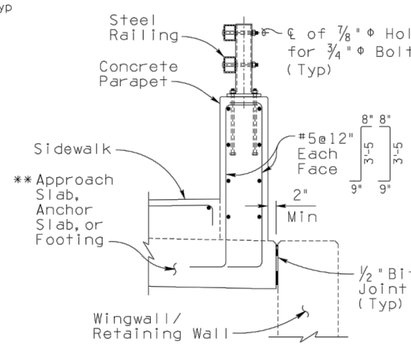

SECTION B-B

** See SD 1.10 for footing details

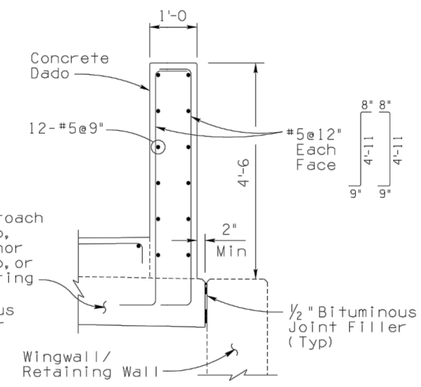

SECTION C-C

GENERAL NOTES:

Construction Specification - Arizona Department of Transportation Standard Specifications for Road and Bridge Construction, latest Edition.

Design Specifications - AASHTO LRFD Bridge Design Specifications, 8th Edition 2017.

This barrier has been evaluated and approved to be of equal strength to barriers with like geometry, which were successfully crash tested to meet MASH 16 requirements for Test Level 4.

Design Loads:

Dynamic Load (For barrier Design) = 80^{K}

Dynamic load is based on NCHRP 20-07(395) MASH Equivalency of NCHRP Report 350 - Approved Bridge Railings.

Equivalent Static Load (For footing design) = 28^{K}

Footing design is based on NCHRP Report 663.

All Concrete shall be Class "S" (f'c = 4000 psi).

Reinforcing steel shall conform to ASTM Specification A615. All reinforcing shall be furnished as Grade 60. All reinforcing shall be epoxy coated at locations above EL. 4000 ft.

All bends and hooks shall meet the requirements of AASHTO LRFD Article 5.10. All bend dimensions for reinforcing steel shall be out-to-out of bars. All placement dimensions for reinforcing steel shall be to center of bars unless noted otherwise.

All reinforcing steel shall have 1½ inch clear cover unless noted otherwise.

Structural tubing (TS) shall be ASTM A500 Grade B. All other structural steel shall conform to ASTM A36 unless noted otherwise.

All welding shall conform to the requirements of the American Welding Society, ANSI/AASHTO/ AWS D1.5 Bridge Welding Code, latest Edition.

Concrete parapets on continuous superstructures shall have ½" bituminous joint filler in open joints over piers.

Imbed ½", Bridge Number and Year Built, using 1½"w x 2"h number impressions in concrete, located as shown at the approach end of the outside lane.

Labor and materials for railing, parapet, dado, anchorage bars, sidewalk and PEDESTRIAN FENCE (SD 1.13) are included in the pay item (Item No. 6011132).

Dimensions shall not be scaled from drawings.

Item	Combination Pedestrian-Traffic Bridge Railing
Item No.	6011132
Measurement	Linear Foot

RAILING NOTES:

See Bridge Plans for rail layout, elevation, joint locations and rail end treatments.

All exposed steel edges shall be ground smooth. All structural steel rail assembly components shall be galvanized after fabrication in accordance with ASTM A123. All galvanizing that has been damaged in handling, transportation or welding shall be repaired by the application of a paste compound of an approved zinc powder and flux.

All post bolt heads shall be on sidewalk side. All bolts, nuts and washers shall be galvanized in accordance with the requirements of ASTM A153.

For fence attachment details, see SD 1.13. (Lower rail tube is not required with fence).

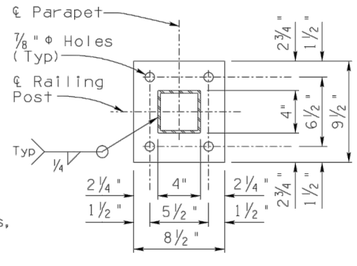

PLATE DETAIL

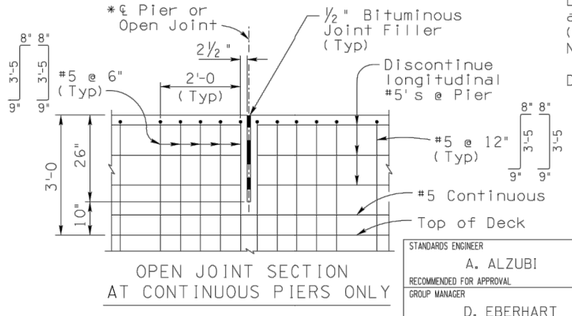

OPEN JOINT SECTION AT CONTINUOUS PIERS ONLY

* Parapet Stirrups Reinforcement at expansion joints is similar to stirrup reinforcement near open joints at continuous piers

STANDARDS ENGINEER	ARIZONA DEPARTMENT OF TRANSPORTATION INFRASTRUCTURE DELIVERY AND OPERATIONS DIVISION BRIDGE GROUP STANDARD DRAWING	
A. ALZUBI		
RECOMMENDED FOR APPROVAL		
GROUP MANAGER		
D. EBERHART		
APPROVED		
STANDARDS COMMITTEE APPROVED FOR DISTRIBUTION 01/20 DATE	COMBINATION PEDESTRIAN-TRAFFIC BRIDGE RAILING	DRAWING NO. SD 1.12

PRIOR DISTRIBUTION DATE 03/09

Note to Designer:
The information presented in this Standard Drawing has been prepared in accordance with recognized engineering principles and is for general use. It should not be used for specific application without competent professional examination and verification of its suitability and applicability by a licensed professional engineer. Contents within this inner box can be altered.

REV.	DATE	REVISION DESCRIPTION	BY

GCE Inc.
GEORGE CAIRO ENGINEERING, INC.
STAPLEY CENTER
1630 S. STAPLEY DR., SUITE 117
MESA, ARIZONA 85204
WWW.GCAIROINC.COM

NOT FOR CONSTRUCTION 90% SUBMITTAL 09/13/24

DESIGNED BY:	B. JONES
DRAWN BY:	A. SOTO
APPROVED BY:	G. CAIRO
PROJECT No.:	BWC-43
PLOT DATE:	SEPT, 2024

BUCKEYE WATER CONSERVATION AND DRAINAGE DISTRICT
205 EAST ROOSEVELT AVENUE
BUCKEYE, ARIZONA 85326
(623) 386-2196

ROOKS ROAD BRIDGE CROSSING BWCDD MAIN CANAL & LATERAL 24 RELOCATION PHASE 3
BUCKEYE, ARIZONA

ROAD BRIDGE ADOT RAIL DETAIL

BD - 12

Z:\GCE Projects\BWC-43\dwg\PHASE 3\04_BWC-43_Phase 3_BD.dwg|nesb 09/13/24 - 3:25pm

REUSE OF DOCUMENT: THESE PLANS & SPECIFICATIONS, AND THE IDEAS & DESIGNS INCORPORATED HEREIN, AS AN INSTRUMENT OF PROFESSIONAL SERVICE, ARE THE PROPERTY OF GCE, INC., AND ARE NOT TO BE USED, IN WHOLE OR IN PART, FOR ANY OTHER PROJECT WITHOUT THE WRITTEN AUTHORIZATION AND CONSENT OF GCE, INC. ©

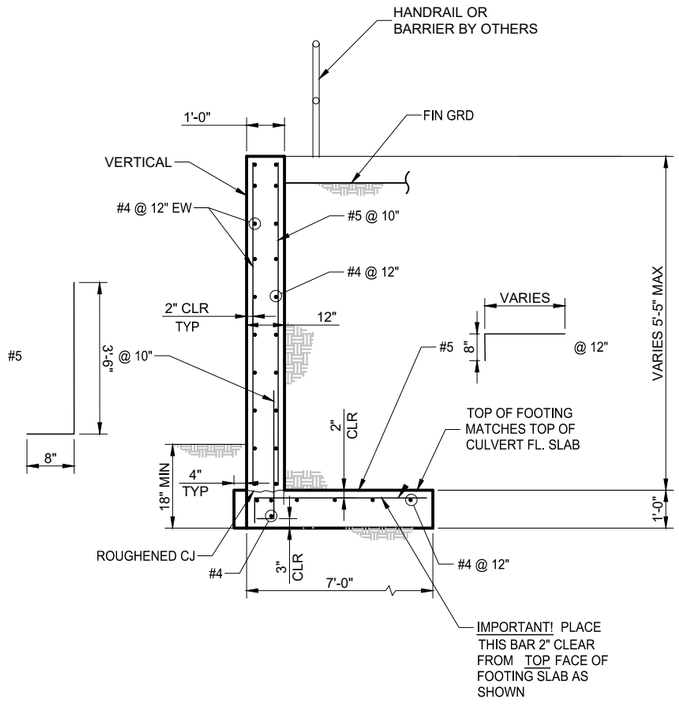

TYPICAL WELL RETAINING WALL SECTION 1

1/2" = 1'-0"

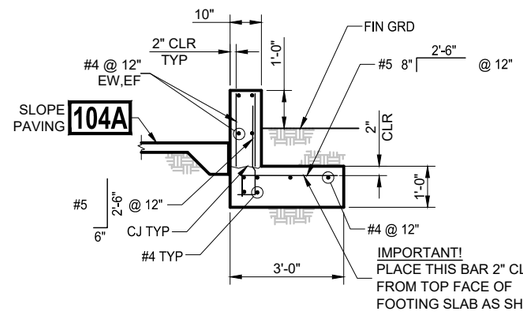

TYPICAL WING WALL SECTION 2

1/2" = 1'-0"

REV.	DATE	REVISION DESCRIPTION	BY

GCE inc.
GEORGE CAIRO ENGINEERING, INC.
STAPLEY CENTER
1630 S. STAPLEY DR., SUITE 117
MESA, ARIZONA 85204
WWW.GCAIROINC.COM

NOT FOR CONSTRUCTION
90% SUBMITTAL
09/13/24

DESIGNED BY:	B. JONES
DRAWN BY:	A. SOTO
APPROVED BY:	G. CAIRO
PROJECT No.:	BWC-43
PLOT DATE:	SEPT, 2024

BUCKEYE WATER CONSERVATION AND DRAINAGE DISTRICT
205 EAST ROOSEVELT AVENUE
BUCKEYE, ARIZONA 85326
(623) 386-2196

ROOKS ROAD BRIDGE CROSSING BWCDD MAIN CANAL & LATERAL 24 RELOCATION PHASE 3
BUCKEYE, ARIZONA

RETAINING WALL DETAILS

S - 1

REUSE OF DOCUMENT: THESE PLANS & SPECIFICATIONS, AND THE IDEAS & DESIGNS INCORPORATED HEREIN, AS AN INSTRUMENT OF PROFESSIONAL SERVICE, ARE THE PROPERTY OF GCE, INC., AND ARE NOT TO BE USED, IN WHOLE OR IN PART, FOR ANY OTHER PROJECT WITHOUT THE WRITTEN AUTHORIZATION AND CONSENT OF GCE, INC. ©

GCE PROJECT No.: BWC
BWCDD MAIN CANAL
BWCDD PROJECT No.: BWC-2149
Z:\GCE Projects\BWC-43\dwg\PHASE 3\05_BWC-43_Phase 3_S.dwg|onesb 09/13/24 - 3:26pm

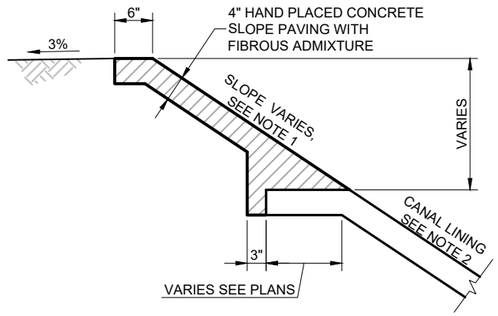

NOTES:

1. SLOPE VARIES, SEE RELATED SITE PLANS.
2. CANAL LINING SLOPE VARIES, SEE RELATED SITE PLANS.
3. CONTRACTION JOINTS IN HAND PLACED LINING SHALL BE PLACED TRANSVERSE TO FLOW DIRECTION AT 10' INTERVALS.
4. CONTRACTOR SHALL USE A TEMPLATE APPROVED BY THE ENGINEER TO CONSTRUCT JOINTS.

SLOPE PAVING DETAIL
NTS

104A

REV.	DATE	REVISION DESCRIPTION	BY

GCE inc.
GEORGE CAIRO ENGINEERING, INC.
STAPLEY CENTER
1630 S. STAPLEY DR., SUITE 117
MESA, ARIZONA 85204
WWW.GCAIROINC.COM

NOT FOR CONSTRUCTION
90% SUBMITTAL
09/13/24

DESIGNED BY:	B. JONES
DRAWN BY:	A. SOTO
APPROVED BY:	G. CAIRO
PROJECT No.:	BWC-43
PLOT DATE:	SEPT, 2024

BWCDD
Buckeye Water Conservation & Drainage District

BUCKEYE WATER CONSERVATION AND DRAINAGE DISTRICT
205 EAST ROOSEVELT AVENUE
BUCKEYE, ARIZONA 85326
(623) 386-2196

ROOKS ROAD BRIDGE CROSSING BWCDD MAIN CANAL & LATERAL 24 RELOCATION PHASE 3

BUCKEYE, ARIZONA

STANDARD DETAILS

D - 1

REUSE OF DOCUMENT: THESE PLANS & SPECIFICATIONS, AND THE IDEAS & DESIGNS INCORPORATED HEREIN, AS AN INSTRUMENT OF PROFESSIONAL SERVICE, ARE THE PROPERTY OF GCE, INC., AND ARE NOT TO BE USED, IN WHOLE OR IN PART, FOR ANY OTHER PROJECT WITHOUT THE WRITTEN AUTHORIZATION AND CONSENT OF GCE, INC. ©

Z:\GCE Projects\BWC-43\dwg\PHASE 3\06_BWC-43_Phase 3_D.dwg|jonesb 09/13/24 - 3:26pm

EXHIBIT “2”

TO

INTERGOVERNMENTAL AGREEMENT
BETWEEN THE
CITY OF BUCKEYE
AND THE
BUCKEYE WATER CONSERVATION AND DRAINAGE DISTRICT

EASEMENT FOR ROADWAY AND UTILITIES
(consisting of _____ pages)

WHEN RECORDED, RETURN TO:
City of Buckeye
ATTN: City Clerk, Lucinda J. Aja
530 East Monroe Avenue
Buckeye, Arizona 85326

EASEMENT

THIS EASEMENT AGREEMENT ("Easement") is made this _ day of _____, 20_, by and between **BUCKEYE WATER CONSERVATION AND DRAINAGE DISTRICT,** an irrigation and water conservation district, a municipal corporation, and a political subdivision of the State of Arizona ("Grantor") and City of Buckeye, an Arizona municipal corporation ("Grantee").

Recitals

A. Grantor is a duly formed governmental organization pursuant to that certain November 6, 1922 declaration made and entered by the Maricopa County Board of Supervisors, as recorded on November 14, 1922, at Book 26, Page 375 of the Maricopa County Recorder; Grantor operates the Buckeye Canal and associated laterals, ditches, and drainage system, located throughout the western part of Maricopa County, Arizona (the "Buckeye Canal System") pursuant to authority granted in part by the government of the United States and laws enacted by Congress; and

B. Grantee desires an easement along that certain portion of the Buckeye Canal System at Rooks Road, as more particularly described hereinbelow; and

C. Grantor and Grantee wish to formalize their mutual rights and duties with respect to the Easement Parcel.

Agreement

In consideration of the mutual agreements and covenants set for the herein, Grantor and Grantee agree as follows:

1. Subject to the provisions of Section 6 below, "Grantor hereby grants and conveys to Grantee," a non-exclusive perpetual easement ("Easement") along, over, under and through that certain property particularly described and depicted on **Exhibit "A"** attached hereto (the "Easement Parcel") for Access, Public Roadway, and Utilities.

2. Grantor may use the Easement Parcel provided Grantor's use is not inconsistent with Grantee's use of the Easement Parcel for the purposes set forth herein.

3. Grantor shall be solely responsible, at its expense, for maintenance over the Easement Parcel related to the Buckeye Canal System. Grantee shall be solely responsible for the expense of maintenance of any Grantee Improvements on the Easement Parcel. Grantor shall have the right to close public access to any portion of the Easement Parcel reasonably necessary to conduct maintenance or construction

activities, for the length of the activities. Grantor shall provide Grantee with 14 days' notice of any such closure, unless the maintenance activity is in response to an emergency and prior notice would be impracticable. Grantor shall, to the extent reasonably possible, undertake maintenance or construction activities in such a way as to not alter, relocate or remove any facilities installed for the benefit of Grantee.

4. Grantee shall have the right, within the Easement Parcel to construct, operate and maintain an underground pipe as part of the Buckeye Canal System. Grantee shall also have the right to construct, operate and maintain water, electric and other utility facilities within the Easement Parcel.

5. Grantee acknowledges that Grantor is the beneficiary of a right-of-way reservation pursuant to the Canal Act of 1890 (43 USC § 945) (the "Canal Act") for the construction, maintenance, and operation of the Buckeye Canal, and that this Easement is supplemental to, confirmatory of, and not in derogation of any and all rights Grantor has under the Canal Act, all use rights Grantor has under that Act for all activities incidental to the operation and maintenance of the Buckeye Canal system, and all prescriptive prior rights of Grantor. Grantee shall take no actions that would limit, hinder, or compromise Grantee's rights under the Canal Act.

6. Grantee shall submit to Grantor all plans and specifications for any Improvements to be made within the Easement Parcel for Grantor's review and approval. Any Improvements shall be designed and constructed in accordance with sound engineering principles and practices, in a good and workmanlike manner and shall comply with all applicable laws, rules, codes, statutes, regulations and ordinances. Grantor, or an entity selected by Grantor, shall construct any approved Improvements as designed, at Grantee's cost. Grantee shall be responsible for all regulatory compliance associated with any Grantee Improvements.

7. Indemnification.

    a. To the extent allowable by law, Grantee agrees to indemnify, defend, protect and hold Grantor, its successors and assigns, officers, directors, employees, partners, representatives and agents (the "Grantor Indemnitees") harmless from, of, for and against any and all liabilities, claims, damages, demands, obligations, expenses, costs, including attorneys' fees and court costs, and causes of action resulting from, arising out of or relating to the use of the Easement Area by Grantee and its invitees, agents, employees, and contractors. Notwithstanding any of the foregoing, Grantee shall not be required to indemnify, defend, protect and hold harmless, release or discharge the Grantor Indemnitees if any such liabilities, claims damages, demands, obligations, expenses, costs, including attorneys' fees and court costs or causes of action result from, arise out of or related to the negligence or intentional misconduct of a Grantor Indemnitee.
    b. To the extent allowable by law, Grantor agrees to indemnify, defend, protect and hold Grantee, its successors and assigns, officers, directors, employees, partners, representatives and agents (the "Grantee Indemnitees") harmless from, of, for and against any and all liabilities, claims, damages, demands, obligations, expenses, costs, including attorneys' fees and court costs, and causes of action resulting from, arising out of or relating to the use of the Easement Area by Grantor and its invitees, agents, employees, and contractors. Notwithstanding any of the foregoing, Grantor shall not be required to

indemnify, defend, protect, and hold harmless, release, or discharge the Grantee Indemnitees if any such liabilities, claims damages, demands, obligations, expenses, costs, including attorneys' fees and court costs or causes of action result from, arise out of or related to the negligence or intentional misconduct of a Grantee Indemnitee.

c. Whenever a party is required to indemnify, defend, protect and hold harmless (the "Indemnifying Party") another pursuant to any terms of Section 8, the amount of the damages to be paid by or on behalf of the Indemnifying Party will, subject to the provisions of this Section 8, be calculated after giving effect to (and reduced by) (i) any amounts to which the Indemnitee has received from third parties in connection with such item of damages, net of any costs or expenses of collecting such amounts ("Reimbursements"), and (ii) the Net Proceeds of any insurance policy received by the Indemnitee with respect to such damages. For purposes of this Section 8(c), "Net Proceeds" means the insurance proceeds actually received, less any deductibles, co-payments and expenses of collecting from the insurance provider. If any Indemnitee receives any Reimbursement or Net Proceeds after an indemnification payment is made which relates thereto, the Indemnitee shall promptly repay to the Indemnifying Party such amount of the indemnification payment as would not have been paid had the Reimbursement or Net Proceeds reduced the original payment at such time or times as and to the extent that such Reimbursement or Net Proceeds is actually received.

d. Notwithstanding anything to the contrary herein, an Indemnitee may not assert multiple claims under this Section 8 in order to recover duplicative damages in respect of a single set of facts or circumstances under more than one representation, warranty, covenant or agreement in this Easement whether such facts or circumstances would give rise to a breach of more than one representation, warranty, covenant or agreement in this Easement.

8. Any notice hereunder to be given by Grantor to Grantee shall be in writing and shall be given by personal delivery, overnight courier service, or United States certified or registered mail, return receipt requested, postage prepaid, to Buckeye Water Conservation and Drainage District, 205 Roosevelt Ave, Buckeye, Arizona, 85326, Attention: Administrative Manager. Any notice to be given hereunder by Grantee, to Grantor shall be in writing and shall be given by personal delivery, overnight courier service, or United States certified or registered mail, return receipt requested, postage prepaid, to City of Buckeye, 530 E Monroe Ave, Buckeye AZ 86326, Attention: City Manager, with a copy to K. Scott McCoy, City Attorney, City of Buckeye, 530 E Monroe Ave, Buckeye AZ 86326, Either party may designate by written notice, a new address to which any such notice shall thereafter be so addressed and mailed.

9. Each of the easements, covenants, conditions, restrictions, rights and obligations set forth herein runs with the land and creates equitable servitudes in favor of the Grantee and its successors and assigns, binds every person having any fee, leasehold or other interest therein and inures to the benefit and the respective parties and their successors, assignees, heirs and personal representatives.

10. Any subsequent owner of the Easement Parcel or any portion thereof, by accepting a deed conveying title thereto, or the execution of a contract for the purpose thereof, whether from the original Grantor from a subsequent owner of such Easement Parcel, or any portion thereof,

accepts such deed or contract subject to each and all of the easements, covenants, conditions, restrictions and obligations contained herein, and assumes the obligation of Grantor hereunder. By such acceptance and assumption, any such subsequent owner for his- or herself and his or her successors, assignees, heirs and personal representatives, covenants, consents and agrees to keep, observe, comply with, and perform the obligations and agreements of Grantor set forth herein with respect to the real property so acquired by such subsequent owner.

11. Each provision of this Easement in the application thereof to the Easement Parcel and hereby declared to be independent and severable from the remainder of this Easement. If any provision contained herein is held to be invalid or to be unenforceable or not to run with the land, such holding does not affect the validity or enforceability of the remainder of this Easement.

12. Time is of the essence of this Easement.

13. This Easement contains a complete understanding and agreement of the parties hereto with respect to all matters referred to herein, and all prior representations, negotiations, and understandings are superseded hereby. Exhibits attached hereto are incorporated herein by this reference.

14. The laws of the State of Arizona govern the interpretation, validity, performance and enforcement of this Easement, except to the extent that the rights of any party are governed by the Canal Act or other federal law.

15. In the event of a breach or attempted or threatened breach of the provisions of this Easement, the remedy at law available to enforce this instrument would in all likelihood be inadequate and, therefore, this instrument may be enforced by mandatory or prohibitory injunction or decree of specific performance upon the application of the affected party.

16. This Easement may be executed in as many counterparts as may be convenient or required. It shall not be necessary that the signature of, or on behalf of, each party, or that the signature of all persons required to bind any party, appear on each counterpart. All counterparts shall collectively constitute a single instrument.

17. The Recitals set forth above are true and correct and incorporated herein by this reference.

IN WITNESS WHEREOF, the parties have executed this Easement this _____ day of _____, 20___.

BUCKEYE WATER CONSERVATION AND DRAINAGE DISTRICT,
a political subdivision of the State of Arizona

by:_____

its:_____

ACKNOWLEDGMENT

State of Arizona)
) ss.
County of _____)

On this _____day of _____, 20___, before me, the undersigned Notary Public, personally appeared Noel Carter, known to me to be the General Manager of **BUCKEYE WATER CONSERVATION AND DRAINAGE DISTRICT**, a political subdivision of the State of Arizona, and they, being duly authorized so to do, executed the foregoing instrument for the purposes therein contained.

In witness whereof, I have hereunto set my hand and official seal.

_____
NOTARY PUBLIC

My commission expires:

CITY OF BUCKEYE,
a political subdivision of the State of Arizona

by:_____

its:_____

ACKNOWLEDGMENT

State of Arizona)
) ss.
County of _____)

On this _____day of _____, 20___, before me, the undersigned Notary Public, personally appeared Dan Cotterman, known to me to be the City Manager of the City of Buckeye, a political subdivision of the State of Arizona, and they, being duly authorized so to do, executed the foregoing instrument for the purposes therein contained.

In witness whereof, I have hereunto set my hand and official seal.

_____
NOTARY PUBLIC

My commission expires:

Exhibit "A"
To
Easement

Legal Description

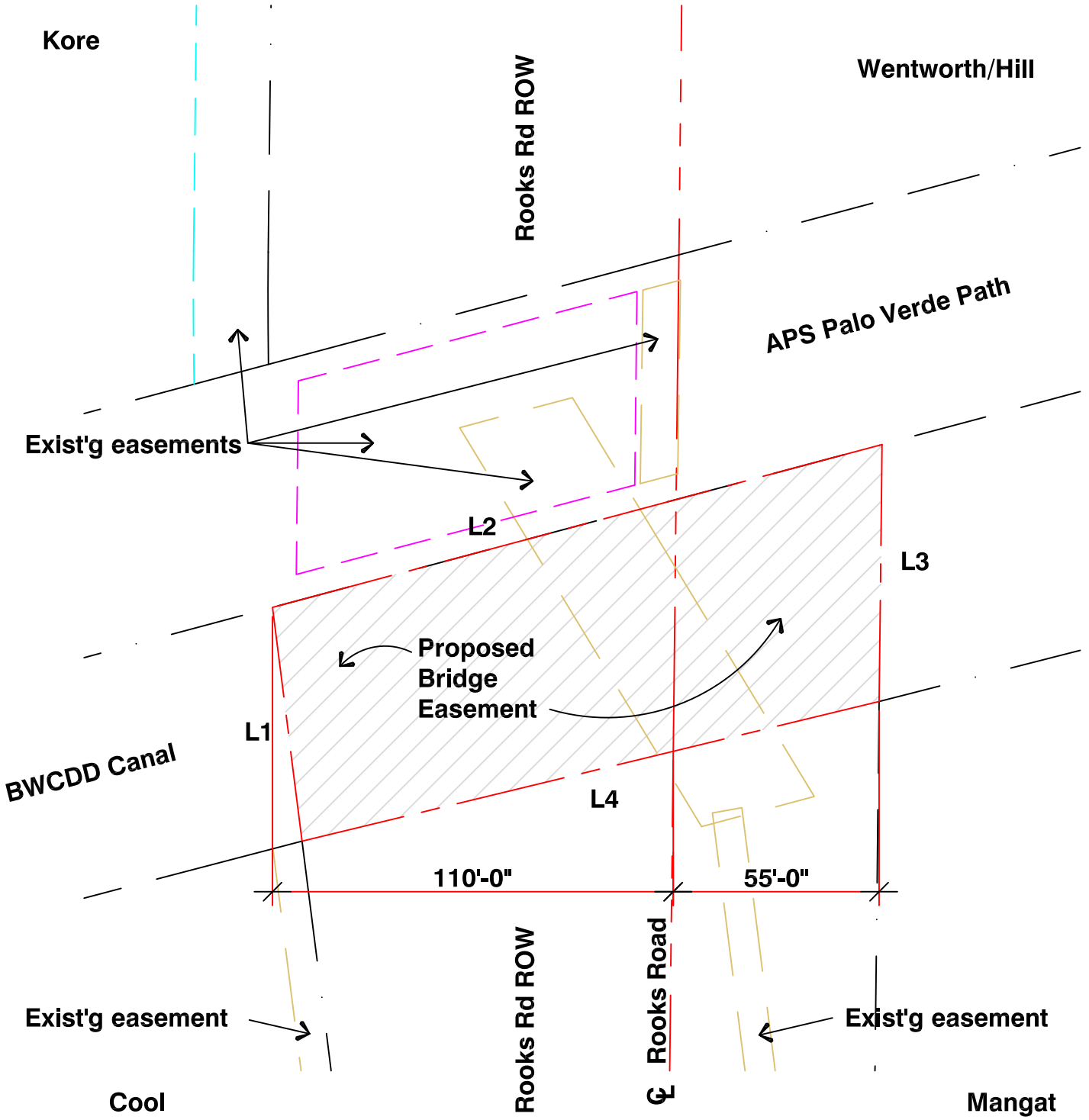

Line Table		
L1	N187°12'43"W	63.17'
L2	N104°57'30"E	169'
L3	S179°21'11"E	68.83'
L4	S103°36'55"W	159'

North
No Scale

Legal Description

Any portion of the Buckeye Irrigation Company Canal lying within the east 110.00 feet of Section 1, Township 1 South, Range 4 West and within the west 55 feet of Section 6, Township 1 South, Range 3 West of the Gila and Salt River Base and Meridian, Maricopa County, Arizona.

EXHIBIT "3"

TO

INTERGOVERNMENTAL AGREEMENT
BETWEEN THE
CITY OF BUCKEYE
AND THE
BUCKEYE WATER CONSERVATION AND DRAINAGE DISTRICT

COST ESTIMATE LETTER FROM BWCDD
FOR BRIDGE CONSTRUCTION
(consisting of _____ pages)

Buckeye Water Conservation & Drainage District
205 E. Roosevelt Ave
Buckeye, Arizona 85326
623-386-2196

Project: BWC-2149 Phase 3

Rooks Road Bridge, Buckeye, Arizona

Mr. Cotterman,

Please review the following information and cost structure required for BWCDD to complete the construction for this phase of this project. Please note that all fees must be paid in advance prior to BWCDD beginning construction. Please sign where indicated and submit with payment.

Construction costs, BWCDD Administrative fees, and Legal Fees will be required prior to construction to commence, in addition to all Easement Agreements being finalized.

If you have any questions, please contact Wes Kerr, BWCDD Project Manager.

Buckeye Water Conservation & Drainage District
205 E. Roosevelt Ave
Buckeye, Arizona 85326
623-386-2196

	CONSTRUCTION PHASE 3 – BRIDGE					
ITEM #	**DESCRIPTION**	**QTY.**	**UNIT**	**UNIT PRICE**	**EXTENSION**	
	PHASE 3					
1	MOBILIZATION	1	LS	$127,980.00	$127,980.00	
2	CONSTRUCTION SURVEY & LAYOUT	1	LS	$68,750.00	$68,750.00	
3	QUALITY CONTROL MATERIAL TESTING	1	LS	$35,800.00	$35,800.00	
4	GAMA TESTING (IF NEEDED)	1	LS	$35,000.00	$35,000.00	
5	REBAR	1	LS	$160,350.00	$160,350.00	
6	DRILLED SHAFTS (3’ DIA. – 40’ DEPTH)	21	EA	$27,900.00	$585,900.00	
7	FURNISH & INSTALL GIRDERS	1,424	LF	$760.00	$1,082,240.00	
8	DEMO AND REMOVE CHANNEL LINING	246	SF	$15.00	$3,690.00	
9	4500 psi CONCRETE ABUTMENTS	143	CY	$1,625.00	$232,375.00	
10	4500 psi APPROACH SLABS	2,566	SF	$48.00	$123,168.00	
11	4500 psi PARAPET WALL	720	SF	$74.90	$53,928.00	
12	4500 psi SIDEWALK	600	SF	$12.00	$7,200.00	
13	4500 psi CURBS	100	LF	$76.00	$7,600.00	
14	4500 psi BRIDGE DECK (6” thickness)	109	CY	$1,350.00	$147,150.00	
15	4000 psi RETAINING WALL	1,002	SF	$80.00	$80,160.00	
16	PLACE 6” DECOMPOSED GRANITE	28	TON	$235.00	$6,580.00	
17	PLACE CHANNEL LINING	663	SF	$19.60	$12,994.80	
18	FURNISH & INSTALL BURROW	2,950	CY	$36.00	$106,200.00	
19	STRUCTURAL EXCAVATION	123	CY	$94.00	$11,562.00	
20	STRUCTURAL BACKFILL	210	CY	$88.00	$18, 480.00	
	PHASE 3 TOTAL				**$2,907,107.80**	
ITEM #	**DESCRIPTION**	**QTY.**	**UNIT**	**UNIT PRICE**	**EXTENSION**	
21	CONTINGENCY	1	EA	$250,000	$250,000.00	
	PHASE 3 TOTAL				**$250,000.00**	

Buckeye Water Conservation & Drainage District
205 E. Roosevelt Ave
Buckeye, Arizona 85326
623-386-2196

	ENGINEERING PHASE 3 - BRIDGE					
ITEM #	**DESCRIPTION**	**QTY.**	**UNIT**	**UNIT PRICE**	**EXTENSION**	
22	DESIGN & ENGINEERING	1	LS	$191,908.00	$191,908.00	***PAID**
23	LEGAL DRAWING & DESCRIPTIONS	2	EA	$3,500.00	$7,000.00	***PAID**
24	CONS MANAGEMENT/OBSERVATION/ INSPECTION FEES (INCDULES TRAVEL TIME & EXPENSES)	1	EA	$75,600.00	$75,600.00	
	PHASE 3 TOTAL				**$274,508.00**	
	BWCDD FEES PHASE 3 - BRIDGE					
ITEM #	**DESCRIPTION**	**QTY.**	**UNIT**	**UNIT PRICE**	**EXTENSION**	
25	DEVELOPMENT FEE (10% of Phase 3 const.)	1	EA	$290,710.78	$290,710.78	
	PHASE 3 TOTAL				**$290,710.78**	
	TOTAL PROJECT COST – PHASE 3				**$3,722,326.58**	
	CREDIT FOR ITEMS ALREADY PAID (22 &23)				**$198,908.00**	
	TOTAL PROJECT COST TO BE PAID – PHASE 3				**$3,523,418.58**	

_____ _____

Wes Kerr, BWCDD Project Manager Daniel Cotterman, City Manager

Date _____ Date _____

CITY OF BUCKEYE
Regular Council Meeting
COUNCIL ACTION REPORT

MEETING DATE: 12/17/24	**AGENDA ITEM:** 4.N. CIP No. 100630 Roadway Intersection Improvements: Durango Street, Miller Road to Yuma Road - Purchase and Sale Agreement (PSA)
DATE PREPARED: 12/17/24	**DISTRICT NO.:** 3
STAFF LIAISON: Rodrigo Nemi, Interim CIP Project Manager, rnemi@buckeyeaz.gov, (623) 204-8442	
DEPARTMENT: Engineering	**AGENDA ITEM TYPE:** Consent Agenda Items / New Business

ACTION/MOTION: (This language identifies the formal motion to be made by the Council)
Council to take action on the Purchase and Sale Agreement (With Escrow Instructions), between the City of Buckeye, an Arizona municipal corporation, and Grace Chapel at Glen Eden Gardens, an Arizona nonprofit corporation, in substantially the form and substance as on file with the City Clerk, for the purchase of necessary right of way, consisting of approximately 2.49 acres, to improve Durango from Miller Road to Yuma Road; and to authorize the City Manager to execute and deliver, on behalf of the City, the Purchase Sale Agreement and all documents related to an escrow transaction for the acquisition of such real property.

SUMMARY

PROJECT DESCRIPTION:
The City of Buckeye is undertaking a critical infrastructure project to improve the roadway corridor between Durango Street and Yuma Road. This initiative involves acquiring necessary right of way (ROW) property from Grace Chapel at Glen Eden Gardens, an Arizona nonprofit corporation, to facilitate roadway enhancements that will improve traffic flow, reduce congestion, and ensure safer travel conditions. The land acquisition for this project has a budgeted amount for FY25 not to exceed $1,339,164.32. The roadway improvements are designed to support community growth, enhance mobility, and provide a safer and more efficient transportation network for residents and visitors.

BENEFITS:
Approval of the Purchase and Sale Agreement will allow the City to secure the necessary ROW to enhance infrastructure and improve safety along the Durango Street to Yuma Road corridor. The acquisition supports critical roadway improvements that will enhance traffic flow, reduce congestion, and create safer travel conditions for residents and commuters. Additionally, this project aligns with the City's commitment to infrastructure development, ensuring that the roadway meets current and future transportation demands while fostering economic growth and accessibility. By acquiring the property in a fiscally responsible manner, the City also demonstrates strategic stewardship of budgeted funds to address community needs effectively.

FUTURE ACTION:
Delivery of a complete Purchase Sale Agreement (PSA) leading to the construction of the intersection improvement.

FINANCIAL IMPACT STATEMENT:
The project is programmed in the Capital Improvement Program in FY25 and FY26. $780,000 in allocation from FY26 to FY25 is required to close on this parcel of real property, with matching fund source from Capital Improvement Project No. 108080 Traffic Signal - SR 85 and Baseline moving from

FY26 to FY25. The total cost is not to exceed $1,339,164.32.

CURRENT FISCAL YEAR TOTAL COST:
The project is programmed in the Capital Improvement Program in FY25 and FY26. $780,000 in allocation from FY26 to FY25 is required to close on this parcel of real property, with matching fund source from Capital Improvement Project No. 108080 Traffic Signal - SR 85 and Baseline moving from FY26 to FY25. The total cost is not to exceed $1,339,164.32.

BUDGETED:
Yes

FISCAL YEAR:
FY 25

FUND/DEPARTMENT:
50213170-543073

Items related to a project or facility location must include an attached vicinity map for Council Review.
ATTACHMENTS:
Purchase and Sale Agreement.pdf
Vicinity Map CIP100630_8x10.pdf

PURCHASE AND SALE AGREEMENT
(WITH ESCROW INSTRUCTIONS)

THIS PURCHASE AND SALE AGREEMENT (WITH ESCROW INSTRUCTIONS) (this "**Agreement**") is made as of the _____ day of _____, 20_____, by and between Grace Chapel at Glen Eden Gardens, an Arizona nonprofit Corporation ("**Seller**") and the **CITY OF BUCKEYE, ARIZONA**, an Arizona municipal corporation ("**Buyer**").

In consideration of the obligations and undertakings hereinafter set forth, and in consideration of the sums to be paid by Buyer, and for other good and valuable consideration, the receipt and adequacy of which are hereby acknowledged, Seller and Buyer agree as follows:

ARTICLE I
PURCHASE AND SALE OF THE PROPERTY

Section 1.1. Purchase. Subject to the terms, provisions, covenants and conditions contained herein, Seller hereby agrees to sell and convey to Buyer, and Buyer agrees to purchase from Seller, all of Seller's right, title and interest in and to the following property ("**Property**"):

(a) That certain land comprised of approximately 2.4853 acres and located in Maricopa County, Arizona, more particularly described on **Exhibit "1"** (legal description and map), attached hereto and incorporated herein by this reference (the "**Land**"), together with all rights, easements and privileges appurtenant thereto including, but not limited to, all of Seller's right, title and interest in and to any adjacent streets, roads, strips, gores, alleys and right–of-way and any subsurface use of the Land;

(b) All air rights, development rights, water rights (groundwater or surface), minerals and mineral rights, sand and gravel, oil and gas, wells, well sites, stock ponds, well equipment and well rights, appurtenant to the Land.

Section 1.2. Purchase Price. The purchase price ("**Purchase Price**") for the Property shall be One Million Three Hundred Thirty-Nine Thousand One Hundred Sixty-Four AND 32/100 DOLLARS ($1,339,164.32). Buyer agrees to pay the Purchase Price to Seller, subject to the prorations and adjustments set forth herein, as follows:

(a) **Earnest Money Deposit.** Upon the Opening of Escrow (as hereinafter defined), Buyer shall deposit with Escrow Agent by Buyer's warrant the sum of Five Hundred AND NO/100 DOLLARS ($ 500.00) (the "**Earnest Money Deposit**"). The Earnest Money Deposit shall become nonrefundable to Buyer following the expiration of the Feasibility Period (unless Buyer shall have, prior to said date, exercised its right to terminate this Agreement in accordance with the provisions of Article II below), except in the event of a Seller default hereunder or as otherwise expressly provided herein. The Earnest Money Deposit shall be applied (and Buyer shall receive a credit in the amount of the Earnest Money Deposit) toward the payment of the Purchase Price.

(b) **Cash Due at Closing.** The balance of the Purchase Price, One Million Three Hundred Thirty-Eight Thousand Six Hundred Sixty-Four AND 32/100 DOLLARS

($1,338,664.32), plus or minus prorations and other adjustments as provided in this Agreement, shall be due at Closing and shall be paid by Buyer to Escrow Agent, for and on behalf of Seller, at Closing (as hereinafter defined).

(c) **Acreage.** The Purchase Price is based on $538,834.07 per Gross Acre (as defined below) of the Property and 2.4853 Gross Acres. If the Survey of the Property pursuant to Section 2.1(f) below reveals that the Property contains more or less than 2.4853 Gross Acres, then the Purchase Price shall be increased or decreased, as the case may be, so that the Purchase Price shall be an amount equal to the product obtained by multiplying $538,834.07 per Gross Acre by the actual number of Gross Acres of the Property. Gross acres (the "**Gross Acres**") shall mean all land located within the boundaries of the Property except only and excluding (A) any land lying within or under dedicated (in fee or by easement/license) public or private roadways or road rights-of-way located within the boundaries of the Property, (B) any land lying within any riverbed (as determined by the Title Company) and (C) physical encroachments into the Property not resolved prior to the Closing Date.

Section 1.3 Escrow Agent; Title Company; Escrow Provisions.

(a) Seller and Buyer hereby appoint Pioneer Title Agency, Inc., 1626 North Litchfield Road, Suite 140, Goodyear, Arizona 85395 ("**Escrow Agent**"), as the escrow agent for the transaction contemplated by this Agreement, with escrow to be opened as of the date of delivery of a fully executed original of this Agreement to Escrow Agent, together with the Earnest Money Deposit (the "**Opening of Escrow**"). Upon Opening of Escrow the Escrow Agent shall cause the Title Company to issue an insured closing protection letter to each of Seller and Buyer.

(b) Escrow Agent, as the party designated as the person responsible for closing the transaction contemplated hereby within the meaning of Section 6045(a)(2)(A) of the Internal Revenue Code, shall file all necessary information, reports, returns and statements regarding this transaction as required by the Code, including, without limitation, any tax reports required pursuant to Section 6045 of the Code.

(c) If Closing fails to occur because of Seller's default, Seller shall be liable for any expenses, fees or cancellation charges of Escrow Agent. If Closing fails to occur because of Buyer's default, Buyer shall be liable for any expenses, fees or cancellation charges of Escrow Agent. If Closing fails to occur for any other reason, including a termination by Buyer as allowed hereunder, Seller and Buyer shall each be liable for one-half of any expenses, fees or cancellation charges of Escrow Agent. Any such expenses, fees or cancellation charges of Escrow Agent shall be reasonable and customary.

Section 1.4 Title Insurance. Seller shall cause First American Title Insurance Company ("**Title Company**") to issue at Closing, or to unconditionally commit at Closing to issue an ALTA *extended* owner's title insurance policy ("**Owner's Policy**") insuring Buyer's title to the Property in the amount of the Purchase Price. Seller shall pay the premium charge for a standard owner's title policy and, if further coverage or endorsements are desired by Buyer, Buyer shall order same from Title Company and pay all additional premiums and all other costs. Seller shall deliver to Title Company the Title Company's standard form of owner's affidavit to provide Buyer with extended coverage rights under the Owner's Policy.

ARTICLE II
INVESTIGATION OF THE PROPERTY

Section 2.1 Title Report and Objections; Survey; Environmental Report.

(a) Title Company shall issue and deliver to Buyer and Seller a preliminary commitment for title insurance concerning the Property together with complete and legible copies of all instruments referred to therein (collectively, the "**Title Report**"), within five (5) business days following the Opening of Escrow. The Title Report is to be preliminary to the Owner's Policy to be issued by Title Company. The Title Report shall show the ownership of any rights-of-way abutting the Property to the centerline thereof whether or not such roadway is owned by Seller. Buyer shall have **ten (10) business days** after receipt of the Title Report in which to advise Seller, in writing, either (i) that the condition of title to the Land as evidenced by the Title Report is acceptable; or (ii) to object to any easements, liens, encumbrances or other items, exceptions or requirements in the Title Report (collectively "**Buyer's Title Objections**"). Notwithstanding anything herein contained to the contrary, Seller shall be under an affirmative obligation to eliminate the following title matters on or before the Close of Escrow, and Buyer shall have no obligation to object to the same for such removal: **(i)** any voluntary financing liens against the Property that may be satisfied by a cash payment, and **(ii)** any judgment liens, mechanics' or materialmen's liens, tax liens or other non-consensual monetary liens that may be satisfied by a cash payment, other than liens for non-delinquent real estate taxes and permitted assessments. Seller is permitted to (a) bond or insure over any mechanics' or materialmen's liens and other liens in accordance with applicable law and (b) satisfy any of the matters set forth in the immediately preceding sentence at the Closing by utilizing the proceeds of the sale contemplated hereby. If Buyer shall not have notified Seller of Buyer's Title Objections within such time specified above, Buyer shall be deemed to have approved the condition of title of the Land as shown by the Title Report and elected to proceed toward Closing.

(b) Seller shall have five (5) business days after Seller's receipt of Buyer's Title Objections (if any) within which to advise Buyer, in writing, whether Seller will attempt to cure any or all of Buyer's Title Objections by Closing ("**Seller's Title Notice**"). If Seller does not so notify Buyer within the time specified, Seller shall be deemed to have delivered Seller's Title Notice to Buyer on the fifth (5th) business day after receiving Buyer's Title Objections stating that Seller is unwilling to cure Buyer's Title Objections.

(c) On or before the fifth (5th) day after Buyer's receipt (or deemed receipt) of Seller's Title Notice, if Seller shall not have agreed to cure or attempt to cure all of Buyer's Title Objections, Buyer shall either (i) waive, in writing, the curing of such Buyer's Title Objections as Seller shall have been unwilling to cure and proceed toward Closing; or (ii) elect to terminate this Agreement by giving written notice to Seller, in which event the Earnest Money Deposit shall be returned to Buyer and this Agreement shall terminate as provided in Section 2.4 hereof. Notwithstanding the foregoing, if Buyer fails to so provide such notice, Buyer shall be deemed to have elected to cancel this Agreement, in which event the Earnest Money Deposit shall be returned to Buyer and this Agreement shall terminate as provided in Section 2.4 hereof. If Seller shall elect to attempt to cure Buyer's Title Objections and should Seller thereupon fail to cure Buyer's Title Objections by the Closing, Buyer shall either (A) waive, in writing, the curing of such Buyer's Title Objections and proceed toward Closing; or (B) elect to terminate this Agreement by giving written notice to Seller, in which event the Earnest Money Deposit shall be returned to Buyer and this Agreement shall terminate as provided in Section 2.4 hereof. Notwithstanding the foregoing, if Buyer fails to so provide such notice, Buyer shall be deemed to have elected to cancel this Agreement, in which event the Earnest Money Deposit shall be returned to Buyer and this Agreement shall terminate as provided in Section 2.4 hereof.

(d) If at any time prior to Closing, Title Company shall issue a supplemental title report that discloses additional matters (other than matters created by or with the written consent of Buyer or arising as a result of any work performed by or other activities of Buyer regarding the Property), the provisions set forth above in this Section 2.1 shall govern the review, objection, and resolution obligations of the parties with respect to such additional matters; provided that Buyer shall have only three (3) days to deliver any objection to Seller following Buyer's receipt of such supplemental report and copies of any additional documents disclosed therein. If Buyer fails to deliver any objection, Buyer shall be deemed to have elected to proceed toward Closing.

(e) All matters that are either approved or deemed approved pursuant to this Section 2.1, together with the standard printed exceptions in the Title Report, shall be referred to as the "**Permitted Exceptions.**"

(f) Seller shall provide Buyer true and complete copies of any and all surveys of the Land (or any portion thereof) in Seller's possession or control to Buyer upon the Opening of Escrow. Buyer may, at its option, obtain, at its own cost and expense, a survey of the Property, prepared by a licensed Arizona land surveyor, certified to Buyer, Seller and the Title Company (the "**Survey**"). Buyer shall have the right to review and approve the Survey in connection with the Title Report referenced above. Buyer shall have the same amount of time as set forth in Section 2.1(a) (i.e., ten (10) days after receipt of the Title Report) above, in which to object to matters set forth in the Survey and Seller shall have the same amount of time set forth in Section 2.1(b) (i.e., five (5) business days) above to respond to Buyer's objections. In addition, if Buyer finds anything in the Survey objectionable to Buyer in its sole and absolute discretion, Buyer shall have the same rights to terminate this Agreement as set forth in Section 2.1(c) above, including, without limitation, the right to the return of the Earnest Money Deposit.

(g) Buyer, at Buyer's cost, may obtain a Phase I Environmental Report (the "**Phase I**") for the Property. In the event the Phase I recommends further site investigation, Buyer shall have the right to conduct a Phase 2 environmental investigation pursuant to a work plan approved in advance by Seller and, subject to the following provisions of this Section 2.1(g), Buyer may elect at its sole cost and expense to perform all remedial action recommended in said Phase 2 investigation prior to Closing. If the cost of the recommended remedial action exceeds $100,000, Buyer shall have the option to elect to terminate this Agreement by giving written notice to Seller, in which event the Earnest Money Deposit shall be returned to Buyer and this Agreement shall terminate as provided in Section 2.4 hereof. If the cost of the recommended remedial action exceeds the Purchase Price, either Seller or Buyer shall have the option to elect to terminate this Agreement by giving written notice to the non-terminating party, in which event the Earnest Money Deposit shall be returned to Buyer and this Agreement shall terminate as provided in Section 2.4 hereof.

Section 2.2. Inspection of Property.

(a) Buyer shall have until the date (the "**Feasibility Date**") which is **thirty (30)** days from the Opening of Escrow (the "**Feasibility Period**") to investigate the Property and all matters relevant to its acquisition, development, usage, occupancy, operation or marketability; such right of investigation shall include, without limitation, the right to have made any surveys, architectural and engineering studies, environmental studies, soil borings and similar examinations, tests, studies and inspections of the Property as Buyer may deem necessary or appropriate (collectively, the "**Inspections**"). Said period shall be tolled for each day the Seller's

deliveries are delinquent. Thereafter, Buyer shall continue to have a right of entry onto the Property for general review purposes, subject to the terms and provisions of this Agreement. Buyer shall and does hereby agree to repair any damage to the Property resulting from the Inspections and, to the extent permitted by law, to indemnify, defend, protect and hold harmless Seller from any and all liabilities, claims, losses, damages and expenses, including but not limited to court costs and reasonable attorneys' fees and any liens placed upon the Property, which may be incurred by Seller because of the Inspections, other than claims for diminution in value or other economic effects resulting from Buyer's discovery of existing hazardous materials or pollutants or other negative information regarding the Property or Buyer's election to terminate this Agreement. Any provision of this Agreement to the contrary notwithstanding, the indemnity by Buyer set forth in this Section shall survive Closing or any termination of this Agreement.

(b) On or before the expiration of the Feasibility Period, Buyer may terminate this Agreement for any reason whatsoever by submitting to Seller written notice of Buyer's desire to terminate this Agreement. Buyer shall not be obligated to explain its reasons for terminating this Agreement in such written notice to Seller. If Buyer elects to terminate this Agreement, the Earnest Money Deposit shall be returned to Buyer and this Agreement shall terminate as provided in Section 2.4. In the alternative, no later than ten (10) days prior to the Feasibility Date, Buyer may elect to provide Seller written notice setting forth Buyer's dissatisfaction with the condition of the Property, citing specific items Buyer disapproves of ("**Buyer's Inspection Objections**"), and providing Seller an opportunity to correct such disapproved items. Seller shall have until 5:00 p.m. on the day preceding the Feasibility Date within which to advise Buyer, in writing, whether Seller will cure any or all of Buyer's Inspection Objections by Closing ("**Seller's Inspection Notice**"). If Seller does not so notify Buyer within the time specified, Seller shall be deemed to have declined to cure Buyer's Inspection Objections. On or before the expiration of the Feasibility Period, if Seller shall not have agreed to cure all of Buyer's Inspection Objections, Buyer shall either (i) waive, in writing, the curing of such Buyer's Inspection Objections as Seller shall have been unwilling to cure and proceed toward Closing; or (ii) elect to terminate this Agreement by giving written notice to Seller, in which event the Earnest Money Deposit shall be returned to Buyer and this Agreement shall terminate as provided in Section 2.4 hereof. Notwithstanding the foregoing, if Buyer fails to so provide such notice, Buyer shall be deemed to have elected to cancel this Agreement as of the Feasibility Date, in which event the Earnest Money Deposit shall be returned to Buyer and this Agreement shall terminate as provided in Section 2.4 hereof. If Seller shall elect to cure Buyer's Inspection Objections and should Seller thereupon fail to cure Buyer's Inspection Objections on or prior to the Closing Date, Buyer shall either (A) waive, in writing, the curing of such Buyer's Inspection Objections as Seller shall have been unable to cure and proceed toward Closing; or (B) elect to terminate this Agreement by giving written notice to Seller, in which event the Earnest Money Deposit shall be returned to Buyer and this Agreement shall terminate as provided in Section 2.4 hereof.

Section 2.3 Water. Seller shall deliver to Buyer all water, well, easement and related agreements, whether or not recorded with the County Recorder related to the Property. Such due diligence shall be delivered in accordance with Section 3.1(a) below. Seller shall not modify the Property water and water rights without the prior written consent of Buyer. All of Seller's rights in such water shall be conveyed to Buyer at the Closing either by the Deed (as defined below) or other applicable instrument.

Section 2.4 Termination. Upon any termination by either of the parties hereto as expressly allowed under this Agreement, (a) Buyer shall promptly return to Seller any materials

concerning the Property previously delivered by Seller or Seller's representatives to Buyer ("**Property Information**"); (b) any funds held by Escrow Agent shall be immediately delivered by Escrow Agent to the party which this Agreement specifies is entitled thereto; and (c) the parties shall thereafter be relieved from further liability hereunder, except with respect to any obligations which expressly survive the termination of this Agreement. A copy of any notice of termination allowed under this Agreement shall also be sent to Escrow Agent by the party electing to terminate.

Section 2.5 Acts Affecting the Property. From and after the date hereof, Seller, unless otherwise agreed to in writing by Buyer, will refrain from (a) performing any construction upon or about the Property; (b) creating or incurring, or suffering to exist any private sewer or water agreement, improvement district, community facilities district, lease, occupancy right, mortgage, lien, pledge or other encumbrances in any way affecting the Property, other than those released on or before Closing; (c) forming any association or district; (d) amending any Permitted Exception; or (e) except as may arise or result from the activities of Buyer on or relating to the Property, Seller will observe all laws, ordinances, regulations and restrictions materially affecting the Property and its use, and will pay taxes on the Property not later than the Closing for the period preceding the Closing.

ARTICLE III
REPRESENTATIONS AND WARRANTIES

Section 3.1 Seller's Covenants, Representations and Warranties. Seller covenants, represents and warrants to the actual present knowledge of **Christopher Asbill** (qualified as described below), to Buyer as follows:

(a) Engineering Plans and Studies. Within five (5) days of the Opening Date, Seller shall furnish to Buyer, to the extent in Seller's possession or control, copies of any current use permits, building permits, licenses, certificates of occupancy, or similar governmental approvals, all engineering plans and studies, soil tests, drawings, surveys, artist's renderings, building maintenance reports, and environmental studies, zoning and entitlement materials which Seller has in its possession, if any, relating to the Property (the "**Property Information**") and all such information may be used by Buyer in such manner as it desires. Buyer understands and acknowledges that Seller is providing all Property Information to Buyer merely as an accommodation, and, except as otherwise expressly stated in this Agreement, Seller is not in any way representing or warranting the accuracy, sufficiency or completeness of any documentation or information provided to Buyer, Seller having recommended to Buyer that it conduct its own examination, inspection and investigation of the Property and the Development during the Investigation Period, including the subsurface thereof and all soil, engineering and other conditions and requirements pertaining to the Property and in any way pertaining to the ownership and development of the Property. Seller shall use good faith efforts to cause to be provided to Buyer, at Buyer's request and expense, reliance letters from the consultants or others responsible for preparation of the environmental, biological, geotechnical, cultural resource, archeological and similar reports and/or studies comprising a portion of the Property Information.

(b) Seller has the full right and authority to enter into this Agreement and consummate the transaction contemplated by this Agreement. All requisite action has been and will be taken by and on behalf of Seller in connection with the entering into of this Agreement, the instruments referenced herein and consummating the transaction contemplated hereby. The person(s) and/or entity(ies) signing this Agreement on behalf of Seller are authorized to do

so. Seller shall furnish to the Title Company such documentation to evidence such authority as the Title Company shall reasonably request.

(c) Any third-party approvals or consents which may be required for Seller to enter into this Agreement or to consummate the transaction contemplated hereby have been, or will prior to Closing be, obtained by Seller. This Agreement and all documents required hereby to be executed by Seller are and shall be valid, legally binding obligations of Seller, enforceable against Seller in accordance with their terms.

(d) To the best of Seller's knowledge: (i) neither the execution of this Agreement nor the performance hereof by Seller will result in any breach or violation of the terms of any law, rule, ordinance, or regulation or of any decree, judgment or order to which Seller is a party now in effect from any court or governmental body; (ii) there are no consents, waivers, authorizations or approvals from any third party necessary to be obtained by Seller in order to carry out the transactions contemplated by this Agreement; and (iii) the execution and delivery of this Agreement and performance hereof by Seller will not conflict with, or result in a breach of, any of the terms, conditions or provisions of, or constitute a default under or result in the creation of any new, or the acceleration of any existing, lien, charge, or encumbrance upon the Property, or any indenture, mortgage, lease, agreement, or other instrument to which Seller is a party and which is binding on the Property or would prevent Seller from consummating the transactions contemplated herein.

(e) Seller has no knowledge of any pending or threatened condemnation or similar proceeding by any person or entity other than Buyer affecting the Property or any portion thereof.

(f) Seller has not: (i) made a general assignment for the benefit of creditors; (ii) filed any voluntary petition in bankruptcy or suffered the filing of any involuntary petition by Seller's creditors; (iii) suffered the appointment of a receiver to take possession of all or substantially all of Seller's assets; (iv) suffered the attachment or other judicial seizure of all, or substantially all, of Seller's assets; (v) admitted in writing Seller's inability to pay its debts as they come due; or (vi) made an offer of settlement, extension or composition to its creditors generally.

(g) At the Close of Escrow there will be no pending actions, suits, arbitrations, claims or proceedings, at law or in equity, affecting all or any portion of the Property or in which Seller is a party by reason of Seller's ownership of the Property, which are not properly bonded over.

(h) Seller has no knowledge, and Seller has received no notice to the contrary, of any plan, study or effort of regulatory authorities which would materially affect the use of the Property, or any portion thereof, for its intended uses or any intended public improvements which will result in any charge being levied against, or any lien assessed upon, or any special assessment lien on the Property or any portion thereof.

(i) Other than this Agreement, Seller has not entered, and shall not enter, into any contracts, options or other obligations or rights for the purchase or sale of the Property. Seller has not entered into any leases, rights of occupancy or first refusals or options to purchase the Property.

(j) No notices of violation of any governmental regulations relating to the Property have been received by Seller and, to Seller's actual knowledge, no such violations exist.

(k) Except as set forth in the Title Report, Seller has no actual knowledge of any special assessments or charges which have been levied against the Property or any existing water, sewer or building moratoria affecting the Property.

(l) There are no mechanics' or materialmen's liens perfected against the Property by parties claiming through Seller. Seller shall cause to be released and discharged promptly, and shall indemnify, defend and hold Buyer harmless for, from and against any liens filed against the Property through parties claiming through Seller prior to or after the Close of Escrow in violation of this warranty.

(m) To Seller's knowledge, there has been no production, disposal, or storage on the Property of any hazardous waste or other toxic or radioactive substance or matter by Seller, nor has Seller received any actual notices of any violation of hazardous waste statutes or regulations. To Seller's actual knowledge, there is no proceeding or inquiry by any authority with respect thereto, nor has Seller received any notice of any violation of the above-mentioned statutes or regulations or any information which would constitute or lead to a violation thereof.

(n) There are no licenses, agreements, leases, options, contracts or rights of purchase or first refusal, recorded or unrecorded, whatsoever affecting the Property. Seller will not, without the prior written consent of Buyer, consent to or convey any interest in the Property, and Seller will not consent to or subject the Property to any additional liens, encumbrances, covenants, conditions, easements, rights-of-way or similar matters after the date of this Agreement, which will not be eliminated on or prior to the Closing Date. Seller shall not, without the prior written consent of Buyer, request or consent to or cause to be issued a subdivision public report for all or any portion of the Property. Seller shall not, without the prior written consent of Buyer, consent to or cause to be executed any zoning or other entitlement applications for all or any portion of the Property.

(o) To Seller's actual knowledge, there are no habitat, wetlands, jurisdictional waters or archaeological sites located on the Property.

(p) To Seller's actual knowledge, no portion of the Property is now being or has ever been used for the discharge or disposal of a pollutant or waste, for the treatment or disposal of refuse or sewage or for the operation of any underground storage tanks.

(q) To Seller's actual knowledge, there are no wells, well sites, tanks (underground storage or otherwise), or buried trash pits on the Premises. There are no well, water rights or water or drainage agreements or obligations respecting the Property.

(r) To Seller's actual knowledge, there are no boundary line disputes.

The "actual knowledge" of Seller, as used in this Section 3.1, means the actual, present knowledge of Christopher Asbill as of the date of this Agreement, without inquiry, duty of inquiry or duty to review any records or other documents, and without imputation to Mr. Asbill of any knowledge held by any other person. As to any of the representations or warranties in this Section 3.1 that are based on Seller's knowledge, if after the date of this Agreement and prior to the Closing, Seller obtains actual knowledge (as defined in the first sentence of this paragraph) that any of such representations or warranties have become incorrect or inaccurate in any material respect, then Seller shall give notice thereof to Buyer by 5:00 p.m., Phoenix time, on the date that is three (3) business days immediately following the date on which Seller obtains

knowledge of such incorrectness or inaccuracy. Upon giving such notice, Seller's representations and warranties in this Section 3.1 shall be deemed modified to the extent described in the notice. Notwithstanding the foregoing, If Seller gives Buyer notice under this paragraph of the modification of any of Seller's representations or warranties, Buyer shall have until 5:00 p.m., Phoenix time, on the date that is seven (7) business days immediately following the date on which Buyer receives Seller's notice to give Seller notice of Buyer's objection to such modifications if Buyer reasonably determines that the new facts or conditions disclosed by such modifications reasonably could have a negative impact on Buyer's proposed development or use of the Property. If Buyer delivers the objection notice within the time provided, Seller and Buyer shall proceed to negotiate in good faith to resolve such objections; however, Seller shall have no obligation to pay any monies or incur any liabilities or obligations to accomplish such resolution. If Buyer's objections are not resolved by the earlier of: (a) 5:00 p.m., Phoenix time, on that date that is ten (10) days immediately following the date on which Seller receives notice of Buyer's objections; or (b) 12:00 noon, Phoenix time, on the Closing Date (the "**Resolution Deadline**"), then Buyer shall either: (i) terminate this Agreement by giving notice of such termination to Seller and to Escrow Agent by the Resolution Deadline, in which event the Earnest Money Deposit shall be returned to Buyer and this Agreement shall terminate as provided in Section 2.4 hereof; or (ii) waive such objections and proceed with Closing. If Buyer does not give notice of termination by the Resolution Deadline, Buyer shall be deemed to have waived its termination right.

Notwithstanding anything to the contrary contained in this Agreement, it is understood and agreed that all representations and warranties of the Seller set forth in this Agreement shall survive the Closing of this Agreement for a period of one (1) year following the Closing Date, and neither party shall have any liability of any kind whatsoever for any breach thereof except to the extent a claim is asserted by the filing of a legal proceeding against such party by such date, and in such event the survival period for the representations and warranties in question shall be tolled while such action is pending both at trial and on appeal and while any judgment arising from such action remains unsatisfied.

Section 3.2. Buyer's Covenants, Representations and Warranties. Buyer covenants, represents and warrants to Seller as follows:

(a) Buyer has the full right and authority to enter into this Agreement and consummate the transaction contemplated by this Agreement. All requisite action has been and will be taken by and on behalf of Buyer in connection with the entering into of this Agreement, the instruments referenced herein and consummating the transaction contemplated hereby. The persons and/or entities signing this Agreement on behalf of Buyer are authorized to do so. Buyer shall furnish to Seller such documentation to evidence such authority as Seller shall reasonably request.

(b) This Agreement and all documents required to be executed by Buyer are and shall be valid, legally binding obligations of Buyer, enforceable against Buyer in accordance with their terms.

Notwithstanding anything to the contrary contained in this Agreement, it is understood and agreed that all representations and warranties of the Buyer set forth in this Agreement shall survive the Closing of this Agreement until the first anniversary of the Closing Date, and neither party shall have any liability of any kind whatsoever for any breach thereof except to the extent a claim is asserted by the filing of a legal proceeding against such party by such date, and in such event the survival period for the representations and warranties in question shall be tolled

while such action is pending both at trial and on appeal and while any judgment arising from such action remains unsatisfied.

Section 3.3. Joint Representations and Warranties. Seller and Buyer represent and warrant each to the other than they have not dealt with any real estate broker or agent in connection with the purchase and sale transaction that is the subject matter of this Agreement, and each party agrees to indemnify, defend and hold harmless the other from and on account of any claims, demands, costs and expenses including, but not limited to, reasonable attorneys' fees, that may be asserted against, suffered or incurred by the indemnitee on account of the default by the indemnitor under this Section. Seller's and Buyer's representations and warranties set forth in this Section shall survive the Close of Escrow or termination of this Agreement.

Section 3.4. Survivability. All representations and warranties in this Article III shall be true and correct as of the date hereof and shall be deemed reaffirmed by the parties hereto as true and correct as of the Closing. All representations and warranties of the parties set forth in this Article III shall survive the Closing for the periods described above.

ARTICLE IV
CLOSING

Section 4.1. Closing; Time of Closing. Buyer and Seller acknowledge and agree that the "**Closing Date**" or "**Closing**" shall occur on or before the fifteenth (15th) day following the Feasibility Date, or upon such earlier date upon which Buyer and Seller shall agree.

Section 4.2. Buyer's Obligation to Close. Buyer shall not be obligated to close hereunder unless each of the following conditions shall exist on the Closing Date:

(a) The Title Company shall be prepared to issue (or be prepared to unconditionally commit to issue) the Title Policy, subject to (i) matters created by Buyer, if any, and (ii) the Permitted Exceptions.

(b) Seller shall have provided to Title Company evidence that Seller is authorized to sell the Property to Buyer in accordance with the terms of this Agreement (as amended, if applicable) and to enter into, execute, deliver and perform this Agreement.

(c) Seller's representations and warranties made by Seller are true and correct in all material respects on and as of the Closing Date with the same force and effect as if made on and as of the Closing Date.

(d) Seller shall have performed all covenants and obligations and satisfied all conditions required by this Agreement to be performed or satisfied by Seller on or before the Closing Date.

(e) There shall have been no material adverse change in the physical condition of the Property.

The provisions of this Section 4.2 are for the sole benefit of Buyer and may be waived by Buyer in its discretion.

Section 4.3. Seller's Obligation to Close. Seller shall not be obligated to close hereunder unless each of the following conditions shall exist on the Closing Date: (a) Buyer's representations and warranties made by Buyer are true and correct in all material respects on and as of the Closing Date with the same force and effect as if made on and as of the Closing Date; and (b) Buyer shall have performed all covenants and obligations and satisfied all conditions required by this Agreement to be performed or satisfied by Buyer on or before the Closing Date. The provisions of this Section 4.3 are for the sole benefit of Seller and may be waived by Seller in its discretion.

Section 4.4. Closing Deliveries. By the Closing, the following shall occur:

(a) Seller shall deliver to Buyer:

(i) a duly executed and acknowledged special warranty deed (the "**Deed**") conveying fee title to the Property to Buyer subject only to (a) current (non-delinquent) ad valorem real property taxes, assessments of record with the Maricopa County Recorder, improvement liens of record with the Maricopa County Recorder, and similar matters to be prorated between the parties at Closing pursuant to Section 4.5(a); and (b) the Permitted Exceptions. The form of the Deed is attached hereto and incorporated herein as **Exhibit "2"**;

(ii) an Affidavit of Property Value ("**AOV**"), to the extent required by applicable law, duly executed and appropriately acknowledged by Seller or its agent;

(iii) such documents and instruments as required in Buyer's reasonable discretion to assign, transfer, convey and set over unto Buyer all of the irrigation grandfathered groundwater rights appurtenant to the Property, if any, and all water wells located on the Property, if any;

(b) Buyer shall pay to Seller the Purchase Price as provided in Section 1.2, subject to the adjustments described in Section 4.5.

(c) Seller shall execute and deliver to Buyer and the Escrow Agent an affidavit that evidences that Seller is exempt from the withholding requirements of Section 1445 of the Internal Revenue Code.

(d) Seller and Buyer shall each deliver to the other such instruments, documents, or certificates (including certificates of public officials to the extent the same are reasonably available) as the other party or its counsel may reasonably request in order to attest to the organization and existence of such party, its authority to execute and deliver this Agreement, and to effect the transactions herein contemplated, and attesting to the taking of all necessary action to authorize the herein contemplated transactions.

(e) Seller shall execute and deliver to Buyer such other documents, instruments, or agreements which Seller may be required to deliver to Buyer pursuant to the provisions of this Agreement or which may be necessary to consummate the transactions contemplated by this Agreement.

(f) Buyer shall execute and deliver to Seller: (i) an Affidavit of Property Value, to the extent required by applicable law, duly executed and appropriately acknowledged by Buyer or its agent; and (ii) such other documents, instruments, or agreements which Buyer may be

required to deliver to Seller pursuant to the provisions of this Agreement or which may be necessary to consummate the transactions contemplated by this Agreement.

(g) The due diligence documents of Seller shall be released to Buyer at Closing at no cost to Buyer.

Section 4.5. Closing Adjustments. The funds due at Closing pursuant to Section 1.2 shall be subject to adjustment as of the Closing Date in accordance with the following provisions:

(a) **Taxes and Assessments.** All real property taxes and assessments (collectively, "**Real Estate Taxes**") for the Property shall be prorated as of 12:01 a.m. Phoenix time on the Closing Date.

(b) **Closing Costs.** Seller shall pay the premium for a Standard Owner's Policy, the fees and expenses of Seller's attorneys, and one-half of the escrow fees. Buyer shall pay the costs of recording the Deed, the entire cost of any extended coverage or special endorsements requested from the Title Company by Buyer, and one-half of the escrow fees. Seller shall pay the cost of recording any instruments required to discharge any liens or encumbrances against the Property which Seller is obligated hereunder to discharge.

Section 4.6 Settlement Statement. At the Closing, Seller and Buyer shall execute a closing settlement statement to reflect the credits, prorations and adjustments contemplated by or specifically provided for in this Agreement.

Section 4.7 Eminent Domain. If, prior to the Closing, any material portion thereof shall be threatened or taken by any governmental authority under a power of eminent domain, or if a suit relating thereto shall be filed or threatened, then Buyer shall elect, by written notice to Seller not later than five (5) days following Buyer's receipt of notice from Seller of such taking or pending action, either to (i) proceed to Closing, whereupon Seller shall assign Seller's rights to any condemnation award to Buyer, and Buyer shall not then be able to seek any other damages or compensation from Seller; or (ii) terminate this Agreement, in which event the Earnest Money Deposit shall be returned to Buyer and this Agreement shall terminate as provided in Section 2.4. If Buyer fails to so provide such notice, Buyer shall conclusively be deemed to have elected to proceed to Closing rather than terminate. If other than all or a material portion of the Property shall be taken, the parties shall proceed to Closing, whereupon Seller shall assign Seller's rights to any condemnation award to Buyer, and Buyer shall not be able to seek any other damages or compensation from Seller.

Section 4.8. Possession of Property. Possession of the Property shall be delivered to Buyer upon the Close of Escrow.

Section 4.9 Risk of Loss. Except as provided in Sections 2.2(a) and 4.7 of this Agreement, the risk of loss or damage to the Property and all liability to third persons until the Close of Escrow shall be borne by Seller.

ARTICLE V
BREACH; REMEDIES

Section 5.1 Seller's Failure to Close. If Seller fails to Close, and provided that Buyer is not then in breach or default of its obligations hereunder, then Buyer, at Buyer's option,

shall be entitled to (i) seek specific performance of Seller's obligations hereunder; (ii) terminate this Agreement by written notice to Seller and Escrow Agent, in which event the Earnest Money Deposit, accrued interest and all other sums previously deposited by Buyer with Escrow Agent or which were paid to Seller on account of this Agreement shall be returned to Buyer, and Buyer may pursue any claim for its actual damages and reasonable attorneys' fees and costs as provided by law; or (iii) waive such breach and proceed to Closing. Notwithstanding any such termination, Buyer shall have the continuing right to enforce any surviving obligations provided for in this Agreement.

Section 5.2 Buyer's Failure to Close. If Buyer fails to complete the acquisition of the Property as herein provided, and provided that Seller is not then in breach or default hereunder, Seller as its remedy for Buyer's failure to close this transaction shall be entitled to terminate this Agreement by written notice to Buyer, in which event Seller shall be entitled to receive the Earnest Money Deposit as liquidated damages for Buyer's failure to close this transaction, and this Agreement shall terminate as provided in Section 2.4. Payment to Seller of the Earnest Money Deposit shall terminate all of Seller's rights and remedies at law or in equity against Buyer with respect to this transaction for Buyer's failure to close this transaction. The parties hereby agree that the amount of the Earnest Money Deposit shall be and constitutes liquidated damages for Buyer's failure to close this transaction, Buyer and Seller acknowledging and agreeing that it is difficult or impossible to determine the actual damages Seller would suffer from Buyer's failure to close this transaction and that the agreed upon liquidated damages are not punitive or penalties and are just, fair and reasonable. Notwithstanding any such termination for Buyer's failure to close this transaction, Seller shall have the continuing right to enforce any surviving obligations provided for in this Agreement.

Section 5.3 Notice and Cure. Notwithstanding anything in this Agreement to the contrary, no party shall ever be in default hereunder unless such breaching party first receives written notice of default from the non-defaulting party hereunder, stating with specificity the purported default or events of default, and thereafter the defaulting party fails to cure such breach to the reasonable satisfaction of the non-defaulting party within five (5) business days of the defaulting party's receipt of such written notice of default.

ARTICLE VI
GENERAL PROVISIONS

Section 6.1. Notices. All notices, demands, requests, consents, approvals, or other instruments required or permitted to be given pursuant hereto shall be in writing and shall be deemed to have been given and received upon (i) receipt, if hand delivered; (ii) transmission, if delivered by email or facsimile transmission so long as the party sending such transmission receives written evidence of the successful transmission to the recipient(s); (iii) the next business day, if delivered by express delivery service or overnight courier service; or (iv) the third business day following the day of deposit of such notice in registered or certified mail, return receipt requested. Notices shall be provided to the addresses (or facsimile numbers, as applicable) specified below:

If to Seller: Grace Chapel at Glen Eden Gardens
Attention: Christopher S. Asbill, Director
11440 E Willow Point Road
PO Box 1246
Cornville AZ 86325

If to Buyer: City of Buckeye
Attention: City Manager
530 East Monroe Avenue
Buckeye, Arizona 85326
Facsimile Number: 623-349-6099

With a copy to: City Attorney's Office
Attention: K. Scott McCoy, City Attorney
530 East Monroe Avenue
Buckeye, Arizona 85326

Seller or buyer may at any time change its address for such notices by delivering to the other, as aforesaid, a notice of such change.

Section 6.2. Further Assurances. Each of the parties hereto undertakes and agrees to execute and deliver such documents, writings and further assurances as may reasonably be required to carry out the intent and purpose of this Agreement, which obligation shall survive the Closing.

Section 6.3. Amendment; Waiver; Entire Agreement. No change or modification of this Agreement shall be valid unless the same is in writing and signed by the parties hereto. No waiver of any of the provisions of this Agreement shall be binding unless in writing and signed by the party against who it is sought to be enforced. This Agreement contains the entire agreement between the parties relating to the purchase and sale of the Property. All prior negotiations between the parties are merged in this Agreement, and there are no promises, agreements, conditions, undertakings, warranties, or representations, oral or written, express or implied, between the parties other than as herein set forth.

Section 6.4. Dates and Times. Time is of the essence of this Agreement. Unless expressly stated otherwise, all time periods shall be measured in business days. For purposes of this Agreement, "**business days**" shall mean Monday through Thursday, excluding federal and state holidays. If any date set forth in this Agreement for the delivery of any document or notice or the happening of any event (such as, for example, the expiration of the Feasibility Period or the Closing Date) should, under the terms hereof, fall on a weekend or holiday, then

such date shall be automatically extended to the next succeeding business day. Deliveries or events occurring subsequent to 5:00 PM on a business day in the location of occurrence shall be deemed to have occurred on the next business day (e.g., notices due on a certain date must be received by 5:00 PM on such date).

Section 6.5 Governing Law; Jurisdiction. This Agreement shall be construed and enforced in accordance with the laws of the State of Arizona. Any action or proceeding arising out of or relating to this Agreement or any transaction contemplated hereby shall be brought in the courts of the State of Arizona and/or the United States District Court for the District of Arizona, County of Maricopa.

Section 6.6. Headings. The paragraph headings, which appear in some of the Sections of this Agreement, are for purposes of convenience and reference and are not in any sense to be construed as modifying the Sections in which they appear.

Section 6.7. Successors and Assigns. The provisions of this Agreement are binding upon and shall inure to the benefit of the parties and their respective heirs, personal representatives, successors and assigns. Notwithstanding the foregoing, this Agreement is executed under threat of condemnation by Buyer, and Buyer may not assign any or all of its right, title and interest in and to this Agreement without the prior written consent of Seller.

Section 6.8. Survivability. All covenants and agreements of the parties, including, but not limited to, all indemnity obligations, which, by the context of this Agreement, are to be performed after or are to survive the termination of this Agreement or the Closing, shall, as the case may be, survive the Closing or the termination of this Agreement, as set forth in Section 3.1 above.

Section 6.9. Counterparts/Facsimile Signatures. This Agreement may be executed in several counterparts, each of which shall be deemed an original, but all of which shall constitute only one agreement. Pending exchange and receipt of original signatures, facsimile signatures shall be fully effective as original signatures.

Section 6.10. Attorneys' Fees. In the event of any action at law or in equity between Seller and Buyer to enforce any of the provisions and/or rights under this Agreement or on account of a breach of any term or provision hereof, the unsuccessful party to such litigation agrees to pay to the prevailing party all costs and expenses, including reasonable attorneys' fees, incurred therein by such prevailing party, including any such costs and expenses incurred in any appeal, and if such prevailing party shall recover judgment in any action or proceeding, such costs, expenses and fees shall be included in and as a part of such judgment. As used herein, the term "prevailing party" shall be the party to such litigation which receives, whether by settlement or judgment, substantially the relief prayed for in such litigation. This provision shall survive Closing or any termination of this Agreement.

Section 6.11. Construction. The terms and provisions of this Agreement represent the results of negotiations between Seller and Buyer, each of which are financially sophisticated parties and each of which has been represented or been given the opportunity to be represented by counsel of its own choosing, and neither of which has acted under any duress or compulsion, whether legal, economic or otherwise. Consequently, the terms and provisions of this Agreement shall be interpreted and construed in accordance with their usual and customary meanings, and Seller and Buyer each hereby waive the application of any rule of law which would otherwise be applicable in connection with the interpretation and construction of this

Agreement that ambiguous or conflicting terms or provisions contained in this Agreement shall be interpreted or construed against the party whose attorney prepared the executed Agreement or any earlier draft of the same. The parties agree that, regardless of which party provided the initial form of this Agreement, drafted or modified one or more provisions hereof, or compiled, printed or copied this Agreement, this Agreement shall be construed solely as an offer to purchase from Buyer, executed by Buyer and provided to Seller for acceptance on the terms set forth herein, which acceptance and the existence of a binding agreement between Buyer and Seller shall be evidenced by the execution hereof by Seller.

Section 6.12. Exculpation. Each party agrees that there shall be absolutely no personal liability on the part of the other party or any employee or agent of such other party with respect to any of the terms, covenants and conditions of this Agreement.

Section 6.13. Liabilities Not Assumed. Except as specifically set forth herein to the contrary, Buyer shall not, and shall not by virtue of the transactions set forth, be deemed to have assumed or agreed to pay, perform, or discharge any liabilities of the Seller, whether or not the same relate to the Property or were incurred in connection with the ownership, use, management, or operation thereof by Seller, or by any person acting through, or on behalf of, Seller.

Section 6.14. Severability. If any term, covenant, condition or provision of this Agreement, or the application thereof to any person or circumstance, shall to any extent be held by a Court of competent jurisdiction, or rendered by the adoption of a statute invalid, void or unenforceable, the remainder of the terms, covenants, conditions or provisions of this Agreement, or the application thereof to any person or circumstance, shall remain in full force and effect and shall in no way be affected, impaired or invalidated thereby.

Section 6.15. Waiver of Covenants, Conditions or Remedies. The waiver by one party of the performance of any covenant, condition or promise, or of the time for performing any act, under this Agreement shall not invalidate this Agreement nor shall it be considered a waiver by such party of any other covenant, condition or promise, or of the time for performing any other act required under this Agreement. The exercise of any remedy provided in this Agreement shall not be a waiver of any consistent remedy provided by law, and the provisions of this Agreement for any remedy shall not exclude any other consistent remedies unless they are expressly excluded.

Section 6.16. Legal Representation. Each party has received independent legal advice from its attorneys with respect to the advisability of executing this Agreement and the meaning of the provisions hereof. The provisions of this Agreement shall be construed as to the fair meaning and not for or against any party based upon any attribution of such party as the sole source of the language in question, it being expressly understood and agreed that the parties hereto participated equally or had equal opportunity to participate in the drafting thereof.

Section 6.17. Relationship of Parties. The parties agree that their relationship is that of Seller and Buyer, and that nothing contained herein shall constitute either party as being the agent or legal representative of the other for any purpose whatsoever, nor shall this Agreement be deemed to create any form of business organization between the parties hereto, nor is either party granted the right or authority to assume or create any obligation or responsibility on behalf of the other party, nor shall either party be in any way liable for any debt of the other.

Section 6.18. Cancellation. Buyer gives notice to Seller that A.R.S. § 38-511 provides that Buyer may, within three years after its execution, cancel any contract without penalty or further obligation made by Buyer if any person significantly involved in initiating, negotiating, securing, drafting or creating the contract on behalf of Buyer is at any time while the contract or any extension of the contract is in effect, an employee or agent of any other party to the contract in any capacity or a consultant to any other party to the contract with respect to the subject matter of the contract. In addition to the foregoing right to cancel a contract, Buyer may recoup any fee or commission paid or due to any person significantly involved in initiating, negotiating, securing, drafting or creating the contract on behalf of Buyer from any other party to the contract arising as a result of the contract.

Section 6.19. Agreement Binding Only Upon Execution. The delivery of this Agreement in unexecuted form by Buyer or Seller does not constitute either an agreement or an offer. This Agreement shall become the binding agreement of the parties only upon the execution by both parties of this Agreement or a counterpart thereof.

Section 6.20. Authority to Execute. Seller and Buyer both acknowledge that the persons whose signatures appear below have appropriate authority to execute this Contract on behalf of Seller and Buyer.

EXECUTION PAGES FOLLOW

IN WITNESS WHEREOF, the parties hereto have executed this Agreement as of the date first above written.

SELLER:

GRACE CHAPEL AT GLEN EDEN GARDENS,
an Arizona nonprofit corporation

By:_____
Christopher S. Asbill, Director

BUYER:

THE CITY OF BUCKEYE, ARIZONA, an Arizona municipal corporation

By:_____
Eric W. Orsborn, Mayor

ATTEST:

_____
Lucinda J. Aja, City Clerk

APPROVED AS TO FORM:

_____
K. Scott McCoy, City Attorney

Adobe Acrobat Sign Transaction Number: CBJCHBCAABAANJ_-GgPhSONEIct-d5eNFrorCEhvSvCt

ACCEPTANCE OF ESCROW AGENT:

Escrow Agent hereby: (i) acknowledges receipt of the Earnest Money Deposit, (ii) agrees to be bound by the provisions hereof applicable to Escrow Agent, (iii) agrees to perform its obligations as set forth herein, and (iv) declares that the Opening Date occurred on the ___ day of _____, 20___.

SECURITY TITLE AGENCY, INC.

By: _____

Its: _____

EXHIBIT "1"
TO
PURCHASE AND SALE AGREEMENT
(WITH ESCROW INSTRUCTIONS)

LEGAL DESCRIPTION AND SKETCH MAP

EXHIBIT "A" - LEGAL DESCRIPTION

ALL OF THOSE PARCELS (PARCEL 1 & PARCEL 2) OF LAND AS CONVEYED TO GRACE CHAPEL AT GLEN EDEN GARDENS, BY DEED OF RECORD IN INSTRUMENT NUMBER 2022-0449229, MARICOPA COUNTY RECORDS (MCR) AND LOCATED IN THE NORTHWEST QUARTER OF SECTION 17, TOWNSHIP 1 NORTH, RANGE 3 WEST OF THE GILA & SALT RIVER MERIDIAN, MARICOPA COUNTY, ARIZONA AND BEING MORE PARTICULARLY DESCRIBED AS FOLLOWS:

COMMENCING AT THE WEST QUARTER CORNER OF SECTION 17, TOWNSHIP 1 NORTH, RANGE 3 WEST OF THE GILA & SALT RIVER MERIDIAN (FOUND MARICOPA COUNTY HIGHWAY DEPARTMENT BRASS CAP IN HANDHOLE) FROM WHICH POINT THE NORTHWEST CORNER THEREOF (FOUND MARICOPA COUNTY HIGHWAY DEPARTMENT BRASS CAP IN HANDHOLE) BEARS NORTH 00 DEGREES 15 MINUTES 50 SECONDS EAST A DISTANCE OF 2626.63 FEET;

THENCE SOUTH 89 DEGREES 53 MINUTES 23 SECONDS EAST, ALONG THE EAST-WEST MID SECTION LINE, A DISTANCE OF 1319.55 FEET TO A TOWN OF BUCKEYE BRASS CAP FLUSH BEING THE SOUTHWEST CORNER OF SAID TRACT, THE POINT BEGINNING;

THENCE ALONG THE PERIMETER OF SAID PARCELS 1 & 2 THE REMAINING COURSES AND DISTANCES:

THENCE NORTH 0 DEGREES 16 MINUTES 51 SECONDS EAST A DISTANCE OF 328.17 FEET TO THE NORTHWEST CORNER THEREOF;

THENCE SOUTH 89 DEGREES 52 MINUTES 59 SECONDS EAST A DISTANCE OF 329.92 FEET TO THE NORTHEAST CORNER THEREOF;

THENCE SOUTH 0 DEGREES 17 MINUTES 04 SECONDS WEST A DISTANCE OF 328.13 FEET TO THE SOUTHEAST CORNER THEREOF;

THENCE NORTH 89 DEGREES 53 MINUTES 23 SECONDS WEST A DISTANCE OF 329.90 FEET TO THE POINT OF BEGINNING.



RPA RITOCH-POWELL & Associates
602-263-1177
www.rpaeng.com

LEGAL DESCRIPTION TO ACCOMPANY
EXHIBIT FOR PARCEL TAKE
ASSESSOR PARCEL 504-63-001F
AND 504-63-001G

BUCKEYE, AZ

DATE: 12/21/22	PROJECT NUMBER
DSN: SS	RPA - 221104
DRN: SS	
CHK: MRS	SHEET 1 OF 3

EXHIBIT "A" - LEGAL DESCRIPTION

THE ABOVE DESCRIBED PARCEL OF LAND CONTAINS 108259.04 S.F. (2.4853 ACRES) OF LAND, MORE OR LESS, INCLUDING ANY EASEMENTS OF RECORD.

THE BASIS OF BEARING FOR THE ABOVE DESCRIPTION IS N 0°15'50" E FOR THE WEST LINE OF THE NORTHWEST QUARTER OF SECTION 17, TOWNSHIP 1 NORTH, RANGE 3 WEST OF THE GILA AND SALT RIVER MERIDIAN, MARICOPA COUNTY, ARIZONA AS CALCULATED ON THE RECORD OF SURVEY PLSS SUBDIVISION – MARICOPA COUNTY GEODETIC DENSIFICATION AND CADASTRAL SURVEY (GDACS) RECORDED IN BOOK 638, PAGE 32, MARICOPA COUNTY RECORDS.

REGISTERED LAND SURVEYOR
CERTIFICATE NO.
57280
MARK R.
SANDWICK
Date Signed 12/21/22
ARIZONA, U.S.A.

RPA RITOCH-POWELL & Associates
602-263-1177
www.rpaeng.com

LEGAL DESCRIPTION TO ACCOMPANY
EXHIBIT FOR PARCEL TAKE
ASSESSOR PARCEL 504-63-001F
AND 504-63-001G

BUCKEYE, AZ

DATE: 12/21/22	PROJECT NUMBER
DSN: SS	RPA - 221104
DRN: SS	
CHK: MRS	SHEET 2 OF 3

EXHIBIT "A" - SKETCH

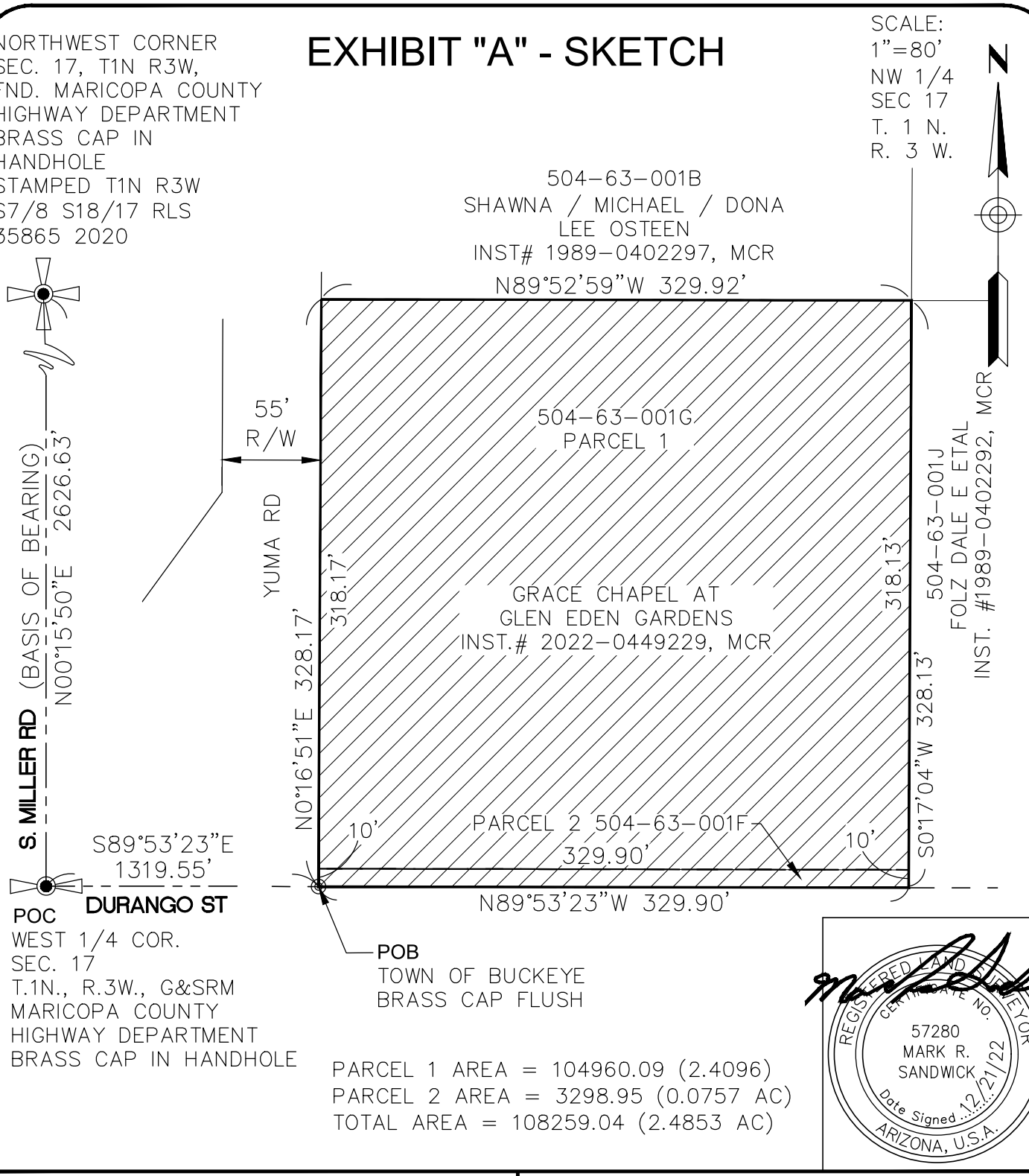

PARCEL 1 AREA = 104960.09 (2.4096)
PARCEL 2 AREA = 3298.95 (0.0757 AC)
TOTAL AREA = 108259.04 (2.4853 AC)

REGISTERED LAND SURVEYOR
CERTIFICATE NO.
57280
MARK R.
SANDWICK
Date Signed 12/21/22
ARIZONA, U.S.A.

RITOCH-POWELL & Associates
602-263-1177
www.rpaeng.com

LEGAL DESCRIPTION TO ACCOMPANY
EXHIBIT FOR PARCEL TAKE
ASSESSOR PARCEL **504-63-001F**
AND 504-63-001G

BUCKEYE, AZ

DATE: 12/21/22	PROJECT NUMBER
DSN: SS	RPA - 221104
DRN: SS	
CHK: MRS	SHEET 3 OF 3

EXHIBIT "2"
TO
PURCHASE AND SALE AGREEMENT
(WITH ESCROW INSTRUCTIONS)

FORM OF SPECIAL WARRANTY DEED

WHEN RECORDED, RETURN TO:

City Clerk
City of Buckeye
530 East Monroe Avenue
Buckeye, Arizona 85326

Exempt from Affidavit of Property Value pursuant to A.R.S. §11-1134(A)(3)

SPECIAL WARRANTY DEED

For good and valuable consideration, Grace Chapel at Glen Eden Gardens, an Arizona nonprofit corporation (collectively, "**Grantor**"), do hereby convey to **THE CITY OF BUCKEYE, ARIZONA**, an Arizona municipal corporation ("**Grantee**"), that certain real property situated in Maricopa County, Arizona, and legally described on Exhibit A attached hereto and made a part hereof, together with all rights, privileges, easements and appurtenant benefits relating thereto and all improvements located thereon (the "**Property**"):

SUBJECT TO: the matters set forth on Exhibit B attached hereto and made a part hereof.

AND THE GRANTOR hereby binds itself and its successors to warrant and defend the title against the acts of the Grantor and no other, subject to the matters set forth above.

[SIGNATURES APPEAR ON NEXT PAGE]

IN WITNESS WHEREOF, Grantor has executed this Special Warranty Deed as of the _____ day of _____, 202_____.

GRANTOR:

BY:_____

ITS:_____

STATE OF _____)
) ss.
County of _____)

The foregoing instrument was acknowledged before me this ___ day of _____, 202_____, by _____.

WITNESS my hand and official seal.

_____
Notary Public

(Affix Notary Seal Here)

EXHIBIT A

to
Special Warranty Deed

Legal Description of Property

EXHIBIT B

to
Special Warranty Deed

Permitted Exceptions

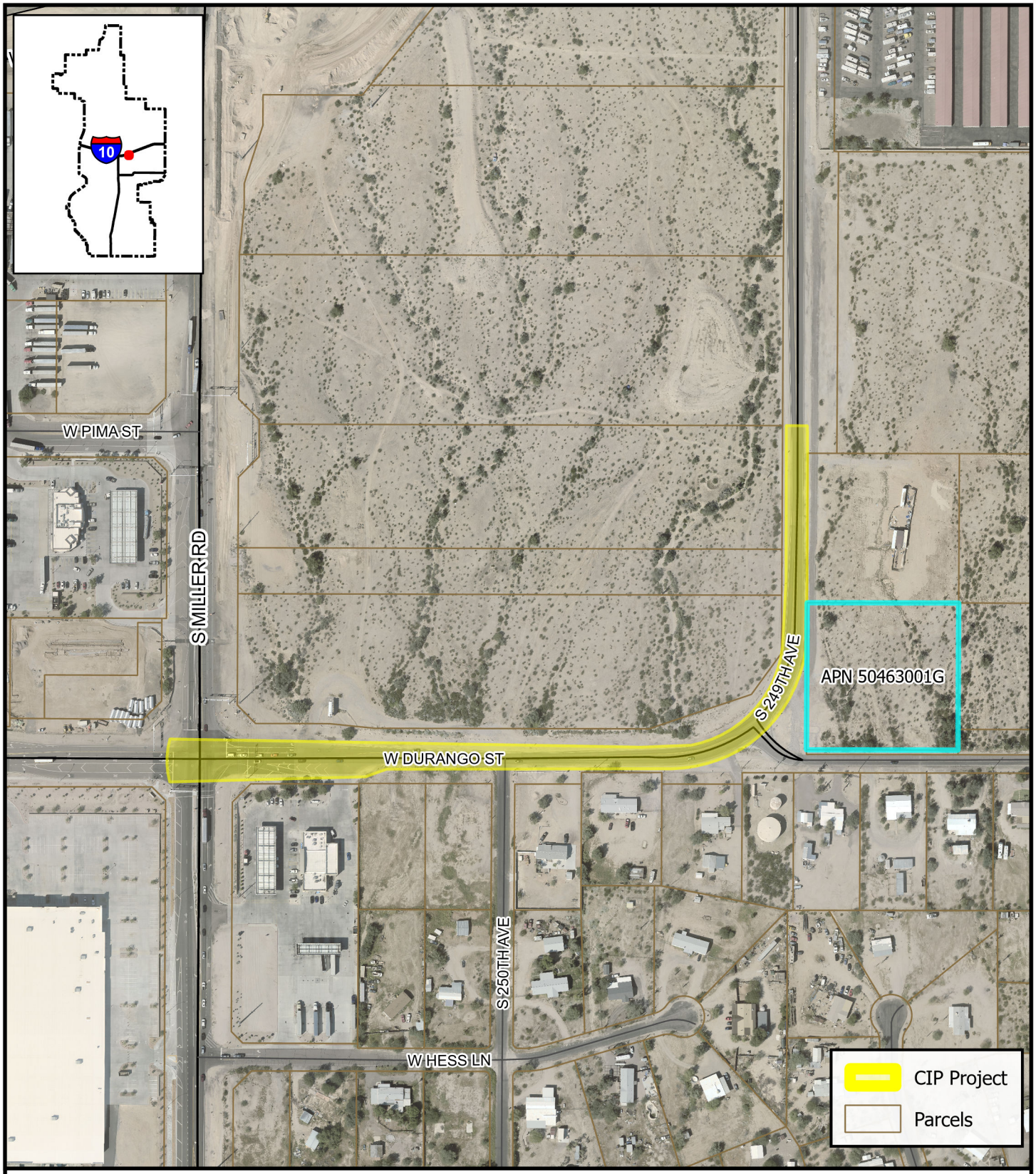

CIP 100630 Roadway/Intersection Improvements: Durango Street, Miller Road to Yuma Road

BUCKEYE, AZ

While every effort has been made to ensure the accuracy of this information, the City of Buckeye makes no warranty, expressed or implied, as to its absolute accuracy and expressly disclaims liability for the accuracy thereof.

0 150 300 600 Feet

N

Date: 12/1

CITY OF BUCKEYE
Regular Council Meeting
COUNCIL ACTION REPORT

MEETING DATE: 12/17/24	**AGENDA ITEM:** 4.O. CM - Capital Improvement Program (CIP) Development and Implementation Services Change Order No.2 to Professional Services Agreement between the City of Buckeye and LJA Engineering, Inc.
DATE PREPARED: 12/17/24	**DISTRICT NO.:** City-wide
STAFF LIAISON: Javier Setovich, Deputy City Manager, jsetovich@buckeyeaz.gov, (623) 349-6997	
DEPARTMENT: City Manager	**AGENDA ITEM TYPE:** Consent Agenda Items / New Business

ACTION/MOTION: (This language identifies the formal motion to be made by the Council)
Council to take action on Change Order No. 2 to the Professional Services Agreement between the City of Buckeye, an Arizona municipal corporation, and LJA Engineering, Inc., a Texas corporation, by adding additional services in the amount of up to $258,400 for a total amount not to exceed $900,400 for services related to the development and implementation of the City of Buckeye Capital Improvement Plan (CIP); and authorize the City Manager to execute and deliver said Change Order on behalf of the City.

SUMMARY

PROJECT DESCRIPTION:
The additional scope for LJA Engineering will include the final implementation of the program and overlap with integrating city staff into the operations and management of the new CIP structure

BENEFITS:
The development of an effective CIP project delivery team is essential in the success of the city by providing the needed infrastructure in a way the meets other city's goals. An effective CIP team will also be needed to tackle the potential Bond projects. It is essential that the new program transitions to city staff in a seamless manner.

FUTURE ACTION:
N/A

FINANCIAL IMPACT STATEMENT:

Funding for this item is included in the FY2025 adopted budget utilizing contractual funds and salary savings.

CURRENT FISCAL YEAR TOTAL COST:
$642,000

BUDGETED:
Yes

FISCAL YEAR:
FY2025

FUND/DEPARTMENT:
General Fund-Engineering

Items related to a project or facility location must include an attached vicinity map for Council Review.
ATTACHMENTS:
LJA- Change Order.pdf
Contract No. 2025004.pdf

480.571.6150
www.LJA.com
426 N. 44th Street, Suite 300, Phoenix, Arizona 85008

November 1, 2024 **CHANGE ORDER NO. 2**

Mr. Javier Setovich, PE
Deputy City Manager
City of Buckeye
530 E Monroe Ave.
Buckeye, Arizona 85326

Re: CIP Development, Implementation, and Project Management Services
City of Buckeye
LJA Project No. AZ3450-1206
LJA Proposal No. 24-28653CO2

Dear Mr. Setovich,

LJA Engineering, Inc. (LJA) is pleased to submit this Scope of Work (SOW) to provide a Change Order to Capital Improvement Program (CIP) Development, Implementation, and Project Management Services to include future planning, operations, and transition assistance for the City of Buckeye (COB). We propose the following services and corresponding fees in accordance with the Professional Services Agreement (PSA) between City of Buckeye and LJA Engineering, Inc., dated April 3, 2024.

SCOPE OF WORK

715 – Municipality Consultation: LJA will provide consultation services that will include the following:

1) Project Management: LJA will provide project management services in accordance with the below:
   a. 40-hours a week of non-remote project management performing duties at the COB Offices or the job site.
   b. Duration to be three (3) months of project management services.
   c. Perform project management services in accordance with project management best practices.
   d. Manage project scope, schedule, and budget for all projects assigned from the planning, design, construction, and post-construction stages as applicable.
   e. Perform communication and project reporting as required.
   f. Schedule project milestones via Primavera software or similar and maintain master-schedule.
   g. Manage program-level cost estimates to maintain project budgets throughout lifecycle.
   h. Communicate with project owner and all stakeholders on at least a bi-weekly basis.
   i. Review change orders, material substitution requests, scope, and schedule adjustments.
   j. Document record drawings and other applicable project closeout tasks.
   k. Report directly to CIP Interim Manager

2) Planning: LJA will continue to refine the planning principles to deliver a ready-to-execute year CIP:
   a. Work with the City Manager's Office (CMO) to create a prioritized project list for City Manager approval.
   b. In conjunction with the Finance Department, develop financing strategies for funding the 5-year CIP.

3) Operations: LJA will operate the CIP as the Program Management Office (PMO) Director.
   a. Implement the CIP structural updates to process.
   b. Create, garner approval, and execute a transition plan to smoothly shift the CIP to COB staff-run management.

Z99 – Reimbursables: Miscellaneous reimbursable expenses such as expenses for courier, reproduction, and mileage, etc. will be provided for this project on a time and material basis as authorized by the Client. The estimated reimbursable expenses are shown in the compensation summary.

COMPENSATION SCHEDULE

We propose to provide the scope of services described above on a Fixed Fee (FF) and will provide a principal at 25%-time allocation, a Director at 100% time allocation, and Project Manager at 100% time allocation.

Phase	Description	Basis of Fee	Contract Amount
715	Municipal Consulting	Fixed Fee	$254,400
Z99	Reimbursable Expenses	T&M	$ 4,000
	TOTAL		**$258,400**

Schedule: This scope of services is to be performed through March 31, 2025. LJA anticipates a monthly billing of approximately $86K.

We appreciate the opportunity to submit this proposal and look forward to working with you on this project. If you have any questions, please call Mr. James Shano at 623.695.6986 or Mr. Clay Rumbaoa at 808.436.0024.

Sincerely,

By: James Shano
James P. Shano, PE
Director

By: Clay Rumbaoa
Clay Rumbaoa, PE
Vice President – Phoenix Region

PROPOSAL ACCEPTED BY:
CITY OF BUCKEYE

By: _____

Name: _____

Title: _____

Date: _____

JPS/CR/jc

PROFESSIONAL SERVICES AGREEMENT
BETWEEN
THE CITY OF BUCKEYE
AND
LJA ENGINEERING, INC.
Contract No. 2025004

CHANGE ORDER # 2

THIS CHANGE ORDER # 2 (this "Change Order") is entered into as of _____ between the City of Buckeye, an Arizona municipal corporation (the "City") and LJA Engineering, Inc., a Texas Corporation (the "Consultant"). This Change Order modifies certain sections of Contract No. 2025004 (the "Contract"), with those sections not expressly modified remaining in full effect pursuant to their terms.

CONTRACT CHANGES:

1. Contract Price, is amended by increasing the not-to-exceed amount by $258,400.00 from $642,000.00 to $900,400.00.

2. Exhibit A Scope of Work and Fee Proposal is amended to incorporate the additional services set forth in Exhibit A of this Change Order #2.

RECITAL OF
CONTRACT TERM (END-DATE)
AND
CONTRACT PRICE:

The original Contract Price was not-to-exceed (NTE) $152,000.00.
The amended Contract Price at the time of this Change Order was NTE $ 642,000.00.
The amended Contract Price after this Change Order is and shall be NTE $900,400.00.
The original and current contract end date of June 30, 2025 remains unchanged.

For reference purposes, **Attachment "1"** attached hereto includes selected pages/portions of the Contract.

ADDITIONAL PROVISIONS:

Except as amended herein, all provisions of the Contract remain in full force and effect.

In the event of any conflict or discrepancy between the terms of this Change Order, the Contract, and any other contract documents, the documents shall govern in that order.

This Change Order may be canceled pursuant to the provisions of A.R.S. § 38-511.

To the extent applicable under A.R.S. § 35-394, LJA Engineering, Inc. certifies that it does not, and will not for the duration of the Contract, use the forced labor, any goods or services produced by the forced labor, or any contractors, subcontractors, or suppliers that use the forced labor or any goods or services produced by the forced labor of ethnic Uyghurs in the People's Republic of China.

IN WITNESS WHEREOF, the parties hereto have executed this Change Order as of the date first set forth above.

CITY:

THE CITY OF BUCKEYE,
an Arizona municipal corporation

_____
Dan Cotterman, City Manager

CONSULTANT:

LJA Engineering, Inc
a Texas Corporation

By: Alan McKee

Its: Senior Vice President

ATTEST:

_____
Lucinda Aja, City Clerk

RECOMMENDED:

William Kauppi

_____
William Kauppi, Chief Financial Officer

APPROVED AS TO FORM:

_____
K. Scott McCoy, City Attorney

(REV. 05.15.2024) (smf)

Exhibit A

Scope of Work

BETWEEN

THE CITY OF BUCKEYE

AND

LJA ENGINEERING, INC.

480.571.6150
www.LJA.com
426 N. 44th Street, Suite 300, Phoenix, Arizona 85008

November 1, 2024 **CHANGE ORDER NO. 2**

Mr. Javier Setovich, PE
Deputy City Manager
City of Buckeye
530 E Monroe Ave.
Buckeye, Arizona 85326

Re: CIP Development, Implementation, and Project Management Services
City of Buckeye
LJA Project No. AZ3450-1206
LJA Proposal No. 24-28653CO2

Dear Mr. Setovich,

LJA Engineering, Inc. (LJA) is pleased to submit this Scope of Work (SOW) to provide a Change Order to Capital Improvement Program (CIP) Development, Implementation, and Project Management Services to include future planning, operations, and transition assistance for the City of Buckeye (COB). We propose the following services and corresponding fees in accordance with the Professional Services Agreement (PSA) between City of Buckeye and LJA Engineering, Inc., dated April 3, 2024.

SCOPE OF WORK

715 – Municipality Consultation: LJA will provide consultation services that will include the following:

1) Project Management: LJA will provide project management services in accordance with the below:
   a. 40-hours a week of non-remote project management performing duties at the COB Offices or the job site.
   b. Duration to be three (3) months of project management services.
   c. Perform project management services in accordance with project management best practices.
   d. Manage project scope, schedule, and budget for all projects assigned from the planning, design, construction, and post-construction stages as applicable.
   e. Perform communication and project reporting as required.
   f. Schedule project milestones via Primavera software or similar and maintain master-schedule.
   g. Manage program-level cost estimates to maintain project budgets throughout lifecycle.
   h. Communicate with project owner and all stakeholders on at least a bi-weekly basis.
   i. Review change orders, material substitution requests, scope, and schedule adjustments.
   j. Document record drawings and other applicable project closeout tasks.
   k. Report directly to CIP Interim Manager

2) Planning: LJA will continue to refine the planning principles to deliver a ready-to-execute year CIP:
   a. Work with the City Manager's Office (CMO) to create a prioritized project list for City Manager approval.
   b. In conjunction with the Finance Department, develop financing strategies for funding the 5-year CIP.

3) Operations: LJA will operate the CIP as the Program Management Office (PMO) Director.
   a. Implement the CIP structural updates to process.
   b. Create, garner approval, and execute a transition plan to smoothly shift the CIP to COB staff-run management.

Z99 – Reimbursables: Miscellaneous reimbursable expenses such as expenses for courier, reproduction, and mileage, etc. will be provided for this project on a time and material basis as authorized by the Client. The estimated reimbursable expenses are shown in the compensation summary.

COMPENSATION SCHEDULE

We propose to provide the scope of services described above on a Fixed Fee (FF) and will provide a principal at 25%-time allocation, a Director at 100% time allocation, and Project Manager at 100% time allocation.

Phase	Description	Basis of Fee	Contract Amount
715	Municipal Consulting	Fixed Fee	$254,400
Z99	Reimbursable Expenses	T&M	$ 4,000
	TOTAL		**$258,400**

Schedule: This scope of services is to be performed through March 31, 2025. LJA anticipates a monthly billing of approximately $86K.

We appreciate the opportunity to submit this proposal and look forward to working with you on this project. If you have any questions, please call Mr. James Shano at 623.695.6986 or Mr. Clay Rumbaoa at 808.436.0024.

Sincerely,

By: James Shano
James P. Shano, PE
Director

By: Clay Rumbaoa
Clay Rumbaoa, PE
Vice President – Phoenix Region

PROPOSAL ACCEPTED BY:
CITY OF BUCKEYE

By: _____

Name: _____

Title: _____

Date: _____

JPS/CR/jc

Attachment "1"

Selected Pages/Portions of Contract

PROFESSIONAL SERVICES AGREEMENT
BETWEEN
THE CITY OF BUCKEYE
AND
LJA ENGINEERING, INC.

Contract No. 2025004

CHANGE ORDER # 1

THIS CHANGE ORDER # 1 (this "Change Order") is entered into as of June 18, 2024 between the City of Buckeye, an Arizona municipal corporation (the "City") and LJA Engineering, Inc., a Texas Corporation (the "Consultant"). This Change Order modifies certain sections of Contract No. 2025004 (the "Contract"), with those sections not expressly modified remaining in full effect pursuant to their terms.

CONTRACT CHANGES:

1. Contract Price, is amended by increasing the not-to-exceed amount from $152,000.00 to $642,000.00.

2. Scope of Work, is amended to incorporate the additional services set forth in **Exhibit A**.

RECITAL OF
CONTRACT TERM (END-DATE)
AND
CONTRACT PRICE:

The original Contract Price was not-to-exceed (NTE) $152,000.00.
The amended Contract Price at the time of this Change Order was NTE $ N/A.
The amended Contract Price after this Change Order is and shall be NTE $642,000.00.

For reference purposes, **Attachment "1"** attached hereto includes selected pages/portions of the Contract.

ADDITIONAL PROVISIONS:

Except as amended herein, all provisions of the Contract remain in full force and effect.

In the event of any conflict or discrepancy between the terms of this Change Order, the Contract, and any other contract documents, the documents shall govern in that order.

This Change Order may be canceled pursuant to the provisions of A.R.S. § 38-511.

To the extent applicable under A.R.S. § 35-394, LJA Engineering, Inc. certifies that it does not, and will not for the duration of the Contract, use the forced labor, any goods or services produced by the forced labor, or any contractors, subcontractors, or suppliers that use the forced labor or any goods or services produced by the forced labor of ethnic Uyghurs in the People's Republic of China.

IN WITNESS WHEREOF, the parties hereto have executed this Change Order as of the date first set forth above.

CITY:

THE CITY OF BUCKEYE,
an Arizona municipal corporation

Dan Cotterman, City Manager

CONSULTANT:

LJA Engineering, Inc
a Texas Corporation

By: Alan B. McKee

Its: Senior Vice President

ATTEST:

Lucinda Aja, City Clerk

RECOMMENDED:

William Kauppi, Chief Financial Officer

APPROVED AS TO FORM:

K. Scott McCoy, City Attorney

Adobe Acrobat Sign Transaction Number: CBJCHBCAABAA_LTiatiC1LX8W7KrJwU4bk1rSpydZ-D_

Exhibit A

Scope of Work

BETWEEN

THE CITY OF BUCKEYE

AND

LJA ENGINEERING, INC.

480.571.6150
www.LJA.com
426 N. 44th Street, Suite 300, Phoenix, Arizona 85008

May 29, 2024 **PROPOSAL**

Mr. Javier Setovich, PE
Deputy City Manager
City of Buckeye
530 E. Monroe Ave.
Buckeye, Arizona 85326

Re: CIP Development, Implementation, and Project Management Services
City of Buckeye
LJA Proposal No. 24-31153

Dear Mr. Setovich,

LJA Engineering, Inc. (LJA) is pleased to submit this Scope of Work (SOW) to provide Capital Improvement Program (CIP) Development, Implementation, and Project Management Services for the City of Buckeye (COB).

SCOPE OF WORK

715 – Municipality Consultation: LJA will provide consultation services that will include the following:

1) Project Management: LJA will provide project management services in accordance with the below:
    a. 40-hours a week of non-remote project management performing duties at the COB Offices or the job site.
    b. Perform project management services in accordance with project management best practices.
    c. Manage project scope, schedule, and budget for all projects assigned from the planning, design, construction, and post-construction stages as applicable.
    d. Perform communication and project reporting as required.
    e. Schedule project milestones via Primavera / Microsoft Project software or similar and maintain master-schedule.
    f. Manage program-level cost estimates to maintain project budgets throughout lifecycle.
    g. Communicate with project owner and all stakeholders on an at least bi-weekly basis.
    h. Review change orders, material substitution requests, scope and schedule adjustments.
    i. Document record drawings and other appliable project closeout tasks.
    j. Report directly to CIP Interim Director.

2) Development: LJA will develop program-wide resources for both short-term, medium-term, and long-term improvement of the CIP including the below:
    a. Write necessary manuals, training plans, and process improvements.
    b. Update key performance indicators and other metrics.

c. Create tracking and reporting tools to assist the PMs focusing on scope, schedule, and budget.

3) Implementation: LJA will implement the CIP updates developed during the development phase including the below:
   a. Implement the CIP updates from the development phase.
   b. Assist in change management and implement industry best-practices.
   c. Monitor the status of the CIP process and provide further recommendations for improvements and modifications as required.
   d. Report regularly to DCM.

Z99 – Reimbursables: Miscellaneous reimbursable expenses such as expenses for courier, reproduction, and mileage, etc. will be provided for this project on a time and material basis as authorized by the Client. The estimated reimbursable expenses are shown in the compensation summary.

COMPENSATION SCHEDULE

We propose to provide the scope of services described above on a Fixed Fee (FF) and will provide for a Principal at 25% time allocation, a Director at 100% time allocation, and at a minimum, Project Manager at 100% time allocation. If needed, an additional Project Manager can be provided upon request (not included in total fee).

Task	Description	Fee Basis	Fee
715	Municipality Consulting	Fixed Fee	$ 482,000
Z99	Expenses	T&M	$ 8,000
TOTAL			**$ 490,000**

Schedule: This scope of services is to be performed through December 31, 2024. LJA anticipates a monthly billing of approximately $80K.

We appreciate the opportunity to submit this proposal and look forward to working with you on this project. If you have any questions, please call Mr. James Shano at 623.695.6986 or Mr. Clay Rumbaoa at 808.436.0024.

Sincerely,

James P Shano, PE
Director

Clay Rumbaoa, PE
Vice President – Phoenix Region

PROPOSAL ACCEPTED BY:
THE CITY OF BUCKEYE

By: _____

Name: _____

Title: _____

Date: _____

Attachment "1"

Selected Pages/Portions of Contract

PROFESSIONAL SERVICES AGREEMENT
BETWEEN
THE CITY OF BUCKEYE
AND
LJA ENGINEERING, INC.
Contract No. 2025004

THIS PROFESSIONAL SERVICES AGREEMENT (this "Agreement") is entered into as of April 3, 2024, between the City of Buckeye, an Arizona municipal corporation (the "City"), and LJA Engineering, Inc., a Texas Corporation (the "Consultant").

RECITALS

A. The City is in need of Program Management Services (the "Services").

B. The Consultant possesses the skill and experience required to provide the Services.

C. The City Manager or the City Manager's designated procurement officer has determined it is in the City's best interest to enter into an agreement with the Consultant to provide the Services.

AGREEMENT

NOW, THEREFORE, in consideration of the foregoing introduction and recitals, which are incorporated herein by reference, the following mutual covenants and conditions, and other good and valuable consideration, the receipt and sufficiency of which are hereby acknowledged, the City and the Consultant hereby agree as follows:

1. Term of Agreement. This Agreement shall be effective as of the date first set forth above and shall remain in full force and effect until June 30, 2025, unless terminated as otherwise provided in this Agreement.

2. Scope of Work. The Consultant shall provide the Services as set forth in the Scope of Work attached hereto as Exhibit "A" and incorporated herein by reference. The Consultant shall (i) provide the Services required by this Agreement, (ii) be responsible for all means, methods, techniques, sequences, and proceedings associated with the Services, and (iii) be responsible for the acts and omissions of its employees, agents and other persons performing any of the Services under a contract with the Consultant.

3. Compensation. The City shall pay the Consultant an amount not to exceed One Hundred Fifty-Two Thousand and 00/100 Dollars ($152,000.00) for the Services at the rates set forth in the Fee Proposal, attached hereto as a part of Exhibit "A".

4. Payments. The City shall pay the Consultant monthly, based upon work performed and completed to date, and upon submission and approval of invoices. All invoices shall document and itemize all work completed to date. Each invoice statement shall include a record of time expended and work performed in sufficient detail to justify payment.

5. Safety Plan. The Consultant shall provide the Services in accordance with a safety plan that is compliant with Occupational Safety and Health Administration ("OSHA"), American National Standards Institute, and National Institute for Occupational Safety and Health standards. If, in the Consultant's sole determination, the Services to be provided do not require a safety plan, the Consultant shall notify the City, in writing, describing the reasons a safety plan is unnecessary. The City reserves the right to request a safety plan following such notification.

6. Documents. Upon payment in full for all undisputed amounts owed to Consultant for services rendered, all documents prepared and submitted to the City pursuant to this Agreement shall be the property of the City. The City may use such documents for other purposes without further compensation to the Consultant; however, any reuse without written verification or adaptation by the Consultant for the specific purpose intended will be at the City's sole risk and without liability or legal exposure to the Consultant.

7. Consultant Personnel. The Consultant shall provide experienced personnel, capable of and devoted to the successful performance of the Services under this Agreement. The Consultant agrees to assign specific individuals to key positions. If deemed qualified, the Consultant is encouraged to hire City residents to fill vacant positions at all levels. The Consultant agrees that, upon commencement of the Services to be performed under this Agreement, key personnel will not be removed or replaced without prior written notice to the City. If key personnel are not available to perform the Services for a continuous period exceeding 30 calendar days, or are expected to devote substantially less effort to the Services than initially anticipated, the Consultant shall immediately notify the City of same and shall, subject to the concurrence of the City, replace such personnel with personnel possessing substantially equal ability and qualifications.

8. Inspection; Acceptance. All work shall be subject to inspection and acceptance by the City at reasonable times during the Consultant's performance. The Consultant shall provide and maintain a self-inspection system that is acceptable to the City.

9. Licenses. The Consultant shall maintain in current status all federal, state, and local licenses and permits required for the operation of the business conducted by the Consultant. The City has no obligation to provide the Consultant, its employees, or subcontractors any business registrations or licenses required to perform the specific services set forth in this Agreement.

10. Materials; Equipment. The Consultant shall provide, pay for, and insure under the requisite laws and regulations all labor, materials, equipment, tools, transportation, and other facilities and services necessary for the proper execution and completion of the Services.

11. Performance Warranty. In addition to any specific obligations set forth in Exhibit A, the Consultant warrants that the Services rendered will conform to the requirements of this Agreement and shall be carried out with the care and skill ordinarily used by members of the same profession practicing under similar circumstances at the same time and in the same locality.

12. Indemnification. To the fullest extent permitted by law, the Consultant shall indemnify and hold harmless the City and each council member, officer, or employee thereof (the

City and any such person being herein called an "Indemnified Party"), for, from, and against any and all losses, claims, damages, liabilities, costs, and expenses (including, but not limited to, reasonable attorneys' fees, court costs and the costs of appellate proceedings) to which any such Indemnified Party may become subject, under any theory of liability whatsoever ("Claims") to the extent that such Claims (or actions in respect thereof) are caused by the negligent acts, recklessness or intentional misconduct of the Consultant, its officers, employees, agents, or any tier of subcontractor in connection with the Consultant's work or services in the performance of this Agreement. The amount and type of insurance coverage requirements set forth below will in no way be construed as limiting the scope of the indemnity in this Section.

13. Insurance.

13.1 General.

A. Insurer Qualifications. Without limiting any obligations or liabilities of the Consultant, the Consultant shall purchase and maintain, at its own expense, hereinafter stipulated minimum insurance with insurance companies authorized to do business in the State of Arizona pursuant to ARIZ. REV. STAT. § 20-206, as amended, with an AM Best, Inc. rating of A- or above with policies and forms satisfactory to the City. Failure to maintain insurance as specified herein may result in termination of this Agreement at the City's option.

B. No Representation of Coverage Adequacy. By requiring insurance herein, or by approving or expressing satisfaction with insurance policies and forms pursuant to the provisions of this agreement, the City does not represent that coverage and limits will be adequate to protect the Consultant. The City reserves the right to review any and all of the insurance policies and/or endorsements cited in this Agreement, but has no obligation to do so. Failure to demand such evidence of full compliance with the insurance requirements set forth in this Agreement or failure to identify any insurance deficiency shall not relieve the Consultant from, nor be construed or deemed a waiver of, its obligation to maintain the required insurance at all times during the performance of this Agreement.

C. Additional Insured. All insurance coverage, except Workers' Compensation insurance and Professional Liability insurance, if applicable, shall name, to the fullest extent permitted by law for claims arising out of the performance of this Agreement, the City, its representatives, officers, directors, officials and employees as Additional Named Insured as specified under the respective coverage sections of this Agreement Alternatively, Consultant's policy of insurance shall include a blanket additional insured endorsement, to extend coverage that is required by this Agreement.

D. Coverage Term. All insurance required herein shall be maintained in full force and effect until all work or services required to be performed under the terms of this Agreement are satisfactorily performed, completed, and formally accepted by the City, unless specified otherwise in this Agreement.

E. Primary Insurance. The Consultant's insurance shall be primary insurance with respect to performance of this Agreement and in the protection of the City as an Additional Insured.

F. Claims Made. In the event any insurance policies required by this Agreement are written on a "claims made" basis, coverage shall extend, either by keeping coverage in force or purchasing an extended reporting option, for three years past completion and acceptance of the services. Such continuing coverage shall be evidenced by submission of annual Certificates of Insurance and necessary endorsements citing applicable coverage is in force and contains the provisions as required herein for the three-year period.

G. Waiver. All policies, except for Professional Liability, including Workers' Compensation insurance, shall contain a waiver of rights of recovery (subrogation) against the City, its agents, representatives, officials, officers, and employees for any claims arising out of the work or services of the Consultant. The Consultant shall arrange to have such subrogation waivers incorporated into each policy via formal written endorsement thereto.

H. Policy Deductibles and/or Self-Insured Retentions. The policies set forth in these requirements may provide coverage that contains deductibles or self-insured retention amounts. Such deductibles or self-insured retention shall not be applicable with respect to the policy limits provided to the City. The Consultant shall be solely responsible for any such deductible or self-insured retention amount.

I. Use of Subcontractors. If any work under this Agreement is subcontracted in any way, the Consultant shall execute written agreements with its subcontractors containing the indemnification provisions set forth in this Section and insurance requirements set forth herein protecting the City and the Consultant. The Consultant shall be responsible for executing any agreements with its subcontractors and obtaining certificates of insurance verifying the insurance requirements.

J. Evidence of Insurance. Prior to commencing any work or services under this Agreement, the Consultant will provide the City with suitable evidence of insurance in the form of certificates of insurance and a copy of the declaration page(s) of the insurance policies as required by this Agreement, issued by the Consultant's insurance insurer(s) as evidence that policies are placed with acceptable insurers as specified herein and provide the required coverages, conditions and limits of coverage specified in this Agreement and that such coverage and provisions are in full force and effect. Confidential information such as the policy premium may be redacted from the declaration page(s) of each insurance policy, provided that such redactions do not alter any of the information required by this Agreement. The City shall reasonably rely upon the certificates of insurance and declaration page(s) of the insurance policies as evidence of coverage but such acceptance and reliance shall not waive or alter in any way the insurance requirements or obligations of this Agreement. If any of the policies required by this Agreement expire during the life of this Agreement, it shall be the Consultant's responsibility to forward renewal certificates and declaration page(s) to the City 30 days prior to the expiration date.

All certificates of insurance and declarations required by this Agreement shall be identified by referencing this Agreement. Additionally, certificates of insurance and declaration page(s) of the insurance policies submitted without referencing this Agreement will be subject to rejection and may be returned or discarded. Certificates of insurance and declaration page(s) shall specifically include the following provisions:

(1) The City, its agents, representatives, officers, directors, officials, and employees are Additional Insureds as follows:

(a) Commercial General Liability – Under Insurance Services Office, Inc., ("ISO") Form CG 20 10 04 13 or equivalent.

(b) Auto Liability – Under ISO Form CA 20 48 or equivalent.

(c) Excess Liability – Follow Form to underlying insurance.

(2) The Consultant's insurance shall be primary insurance with respect to performance of this Agreement.

(3) All policies, except for Professional Liability, including Workers' Compensation, waive rights of recovery (subrogation) against the City, its agents, representatives, officers, officials, and employees for any claims arising out of work or services performed by the Consultant under this Agreement.

ACORD certificate of insurance form 25 (2014/01) is preferred. If ACORD certificate of insurance form 25 (2001/08) is used, the phrases in the cancellation provision "endeavor to" and "but failure to mail such notice shall impose no obligation or liability of any kind upon the company, its agents or representatives" shall be deleted. Certificate forms other than ACORD form shall have similar restrictive language deleted.

K. Endorsements. The Consultant shall provide the City with the necessary endorsements to ensure the City is provided the insurance coverage set forth in this Section 13.

L. Limitation of Liability. To the fullest extent permitted by law, Consultant's total liability to City for any and all claims, losses, expenses or damages whatsoever arising out of or in any way related to the Services or this Agreement from any causes including, but not limited to, Consultant's negligence, errors, omissions, strict liability, or breach of contract and whether claimed directly or by way of contribution shall not exceed the proceeds of applicable insurance required herein.

13.2 Required Insurance Coverage.

A. Commercial General Liability. The Consultant shall maintain "occurrence" form Commercial General Liability insurance with an unimpaired limit of

not less than $1,000,000 for each occurrence, $2,000,000 Products and Completed Operations Annual Aggregate, and a $2,000,000 General Aggregate Limit. The policy shall cover liability arising from premises, operations, independent contractors, products-completed operations, personal injury, and advertising injury. Coverage under the policy will be at least as broad as ISO policy form CG 00 010 93 or equivalent thereof, including but not limited to, separation of insured's clause. To the fullest extent allowed by law, for claims arising out of the performance of this Agreement, the City, its agents, representatives, officers, officials, and employees shall be cited as an Additional Insured under ISO, Commercial General Liability Additional Insured Endorsement form CG 20 10 04 13, or equivalent, which shall read "Who is an Insured (Section II) is amended to include as an insured the person or organization shown in the Schedule, but only with respect to liability arising out of "your work" for that insured by or for you." Alternatively, Consultant's policy of insurance shall include a blanket additional insured endorsement, to extend coverage that is required by this Agreement. If any Excess insurance is utilized to fulfill the requirements of this subsection, such Excess insurance shall be "follow form" equal or broader in coverage scope than underlying insurance.

B. Vehicle Liability. The Consultant shall maintain Business Automobile Liability insurance with a limit of $1,000,000 each occurrence on the Consultant's owned, hired, and non-owned vehicles assigned to or used in the performance of the Consultant's work or services under this Agreement. Coverage will be at least as broad as ISO coverage code "1" "any auto" policy form CA 00 01 12 93 or equivalent thereof. To the fullest extent allowed by law, for claims arising out of the performance of this Agreement, the City, its agents, representatives, officers, directors, officials, and employees shall be cited as an Additional Insured under ISO Business Auto policy Designated Insured Endorsement form CA 20 48 or equivalent. Alternatively, Consultant's policy of insurance shall include a blanket additional insured endorsement, to extend coverage that is required by this Agreement.. If any Excess insurance is utilized to fulfill the requirements of this subsection, such Excess insurance shall be "follow form" equal or broader in coverage scope than underlying insurance.

C. Professional Liability. If this Agreement is the subject of any professional services or work, or if the Consultant engages in any professional services or work in any way related to performing the work under this Agreement, the Consultant shall maintain Professional Liability insurance covering negligent errors and omissions arising out of the Services performed by the Consultant, or anyone employed by the Consultant, or anyone for whose negligent acts, mistakes, errors, and omissions the Consultant is legally liable, with an unimpaired liability insurance limit of $2,000,000 each claim and $2,000,000 annual aggregate.

D. Workers' Compensation Insurance. If the Consultant employs anyone who is required by law to be covered by workers' compensation insurance, the Consultant shall maintain Workers' Compensation insurance to cover obligations imposed by federal and state statutes having jurisdiction over the Consultant's employees engaged in the performance of work or services under this Agreement and shall also maintain Employers Liability Insurance of not less than $500,000 for each accident, $500,000 disease for each employee and $1,000,000 disease policy limit.

13.3 Cancellation and Expiration Notice. The Consultant shall provide at least 30 days prior written notice to the City before insurance required herein expires, is canceled, or is materially changed.

14. Termination; Cancellation. The City may, by written notice to the Consultant as set forth in this Section, terminate this Agreement in whole or in part.

14.1 For City's Convenience. This Agreement is for the convenience of the City and, as such, may be terminated without cause after receipt by the Consultant of written notice by the City. Upon termination for convenience, the Consultant shall be paid for all undisputed services performed to the termination date.

14.2 For Cause. If either party fails to perform any obligation pursuant to this Agreement and such party fails to cure its nonperformance within 30 days after notice of nonperformance is given by the non-defaulting party, such party will be in default. In the event of such default, the non-defaulting party may terminate this Agreement immediately for cause and will have all remedies that are available to it at law or in equity including, without limitation, the remedy of specific performance. If the nature of the defaulting party's nonperformance is such that it cannot reasonably be cured within 30 days, then the defaulting party will have such additional periods of time as may be reasonably necessary under the circumstances, provided the defaulting party immediately (A) provides written notice to the non-defaulting party and (B) commences to cure its nonperformance and thereafter diligently continues to completion the cure of its nonperformance. In no event shall any such cure period exceed 90 days. In the event of such termination for cause, payment shall be made by the City to the Consultant for the undisputed portion of its fee due as of the termination date.

14.3 Due to Work Stoppage. This Agreement may be terminated by the City upon 30 days' written notice to the Consultant in the event that the Services are permanently abandoned. If the Consultant abandons the Services without the consent of the City, the Consultant shall be liable for all actual, incidental, and consequential damages arising from or related to said abandonment, including, but not limited to: (A) the difference between the cost of a replacement consultant to complete the Services and the contract price for the Consultant under this Agreement; and (B) any additional charges, costs, fees or expenses for labor, materials or professional services incurred by the City as a result of delays caused by abandonment of the Services by the Consultant. The City shall use its best efforts to replace the Consultant within a reasonable time.

14.4 Conflict of Interest. This Agreement is subject to the provisions of ARIZ. REV. STAT. § 38-511. The City may cancel this Agreement without penalty or further obligations by the City or any of its departments or agencies if any person significantly involved in initiating, negotiating, securing, drafting, or creating this Agreement on behalf of the City or any of its departments or agencies is, at any time while this Agreement or any extension of this Agreement is in effect, an employee of any other party to this Agreement in any capacity or a consultant to any other party of this Agreement with respect to the subject matter of this Agreement.

14.5 Gratuities. The City may, by written notice to the Consultant, cancel this Agreement if it is found by the City that gratuities, in the form of economic opportunity, future

employment, entertainment, gifts, or otherwise, were offered or given by the Consultant or any agent or representative of the Consultant to any officer, agent or employee of the City for the purpose of securing this Agreement. In the event this Agreement is canceled by the City pursuant to this provision, the City shall be entitled, in addition to any other rights and remedies, to recover and withhold from the Consultant an amount equal to 150% of the gratuity.

14.6 Agreement Subject to Appropriation. The City is obligated only to pay its obligations set forth in this Agreement as may lawfully be made from funds appropriated and budgeted for that purpose during the City's then-current fiscal year. The City's obligations under this Agreement are current expenses subject to the "budget law" and the unfettered legislative discretion of the City concerning budgeted purposes and appropriation of funds. Should the City elect not to appropriate and budget funds to pay its Agreement obligations, this Agreement shall be deemed terminated at the end of the then-current fiscal year term for which such funds were appropriated and budgeted for such purpose and the City shall be relieved of any subsequent obligation under this Agreement. The parties agree that the City has no obligation or duty of good faith to budget or appropriate the payment of the City's obligations set forth in this Agreement in any budget in any fiscal year other than the fiscal year in which this Agreement is executed and delivered. The City shall be the sole judge and authority in determining the availability of funds for its obligations under this Agreement. The City shall keep the Consultant informed as to the availability of funds for this Agreement. The obligation of the City to make any payment pursuant to this Agreement is not a general obligation or indebtedness of the City. The Consultant hereby waives any and all rights to bring any claim against the City from or relating in any way to the City's termination of this Agreement pursuant to this Section.

14.7 Obligations Upon Receipt of Termination Notice. Upon receipt of a notice of termination as set forth above, the Consultant shall (A) immediately discontinue all Services affected (unless the notice directs otherwise), and (B) deliver to the City copies of all data, reports, calculations, drawings, specifications, and estimates entirely or partially completed, together with all unused materials supplied by the City, related to the Services including any completed divisible part of the Services which can be deemed to stand alone (the completed divisible parts of the Services will be determined by both parties at the time of termination). Such termination shall not relieve the Consultant of liability for errors and omissions. Any use of incomplete documents for the Services or for any other project without the specific written authorization by the Consultant will be without liability or legal exposure to the Consultant. The Consultant shall appraise the work it has completed and submit the appraisal to the City for evaluation.

15. Suspension of Work.

15.1 Order to Suspend. The City may, for its convenience, order the Consultant, in writing, to suspend all or any part of the Services for such period of time as it may determine to be appropriate.

15.2 Adjustment to Contract Sum. If the performance of all or any part of the Services is, for any unreasonable period of time, suspended or delayed by an act of the City in the administration of this Agreement, or by its failure to act within the time specified in this Agreement (or if no time is specified, within a reasonable time), an adjustment shall be made for any increase in cost of performance of this Agreement necessarily caused by such unreasonable suspension or

modified in writing accordingly. However, no adjustment shall be made under this clause for any suspension or delay (A) to the extent that performance was suspended or delayed for any other cause, including the fault or negligence of the Consultant, or (B) for which a change order is executed.

16. Miscellaneous.

16.1 Independent Contractor. It is clearly understood that each party will act in its individual capacity and not as an agent, employee, partner, joint venturer, or associate of the other. An employee or agent of one party shall not be deemed or construed to be the employee or agent of the other for any purpose whatsoever. The Consultant acknowledges and agrees that the Services provided under this Agreement are being provided as an independent contractor, not as an employee or agent of the City. The Consultant, its employees, and subcontractors are not entitled to workers' compensation benefits from the City. The City does not have the authority to supervise or control the actual work of the Consultant, its employees or subcontractors. The Consultant, and not the City, shall determine the time of its performance of the services provided under this Agreement so long as the Consultant meets the requirements of its agreed Scope of Work as set forth in Section 2 and in Exhibit "A. The Consultant is neither prohibited from entering into other contracts nor prohibited from practicing its profession elsewhere. The City and the Consultant do not intend to nor will they combine business operations under this Agreement.

16.2 Applicable Law; Venue. This Agreement shall be governed by the laws of the State of Arizona and suit pertaining to this Agreement may be brought only in courts in Maricopa County, Arizona. Notwithstanding any provision of this Agreement to the contrary, in no event shall either party be liable to the other for punitive damages.

16.3 Laws and Regulations. The Consultant shall keep fully informed and shall at all times during the performance of its duties under this Agreement ensure that it and any person for whom the Consultant is responsible abides by, and remains in compliance with, all rules, regulations, ordinances, statutes, or laws affecting the Services, including, but not limited to, the following: (A) existing and future City and County ordinances and regulations, (B) existing and future State and Federal laws, and (C) existing and future OSHA standards.

16.4 Amendments. This Agreement may be modified only by a written amendment signed by persons duly authorized to enter into contracts on behalf of the City and the Consultant.

16.5 Provisions Required by Law. Each and every provision of law and any clause required by law to be in this Agreement will be read and enforced as though it were included herein and, if through mistake or otherwise any such provision is not inserted, or is not correctly inserted, then upon the application of either party, this Agreement will promptly be physically amended to make such insertion or correction.

16.6 Severability. The provisions of this Agreement are severable to the extent that any provision or application held to be invalid by a Court of competent jurisdiction shall not affect any other provision or application of this Agreement that may remain in effect without the invalid provision or application.

16.7 Entire Agreement; Interpretation; Parol Evidence. This Agreement represents the entire agreement of the parties with respect to its subject matter, and all previous agreements, whether oral or written, entered into prior to this Agreement are hereby revoked and superseded by this Agreement. No representations, warranties, inducements or oral agreements have been made by any of the parties except as expressly set forth herein, or in any other contemporaneous written agreement executed for the purposes of carrying out the provisions of this Agreement. This Agreement shall be construed and interpreted according to its plain meaning, and no presumption shall be deemed to apply in favor of, or against the party drafting this Agreement. The parties acknowledge and agree that each has had the opportunity to seek and utilize legal counsel in the drafting of, review of, and entry into this Agreement.

16.8 Assignment; Delegation. No right or interest in this Agreement shall be assigned or delegated by the Consultant without prior, written permission of the City, signed by the City Manager. Any attempted assignment or delegation by the Consultant in violation of this provision shall be a breach of this Agreement by the Consultant.

16.9 Subcontracts. No subcontract shall be entered into by the Consultant with any other party to furnish any of the material or services specified herein without the prior written approval of the City. The Consultant is responsible for performance under this Agreement whether or not subcontractors are used. Failure to pay subcontractors in a timely manner pursuant to any subcontract shall be a material breach of this Agreement by the Consultant. For purposes of this section, subcontractors shall not include Consultant's affiliates under its common insurance program.

16.10 Rights and Remedies. No provision in this Agreement shall be construed, expressly or by implication, as waiver by the City of any existing or future right and/or remedy available by law in the event of any claim of default or breach of this Agreement. The failure of the City to insist upon the strict performance of any term or condition of this Agreement or to exercise or delay the exercise of any right or remedy provided in this Agreement, or by law, or the City's acceptance of and payment for services, shall not release the Consultant from any responsibilities or obligations imposed by this Agreement or by law, and shall not be deemed a waiver of any right of the City to insist upon the strict performance of this Agreement.

16.11 Attorneys' Fees. In the event either party brings any action for any relief, declaratory or otherwise, arising out of this Agreement or on account of any breach or default hereof, the prevailing party shall be entitled to receive from the other party reasonable attorneys' fees and reasonable costs and expenses, determined by the court sitting without a jury, which shall be deemed to have accrued on the commencement of such action and shall be enforced whether or not such action is prosecuted through judgment.

16.12 Liens. All materials or services shall be free of all liens and, if the City requests, a formal release of all liens shall be delivered to the City upon payment in full for materials or services rendered.

16.13 Offset.

A. Offset for Damages. In addition to all other remedies at law or equity, the City may offset from any money due to the Consultant any amounts the Consultant owes to the City for damages that have been reduced to a judgment resulting from breach or deficiencies in performance or breach of any obligation under this Agreement.

B. Offset for Delinquent Fees or Taxes. The City may offset from any money due to the Consultant any amounts the Consultant owes to the City for delinquent fees, transaction privilege use taxes, and property taxes, including any interest or penalties.

16.14 Notices and Requests. Any notice or other communication required or permitted to be given under this Agreement shall be in writing and shall be deemed to have been duly given if (A) delivered to the party at the address set forth below, (B) deposited in the U.S. Mail, registered or certified, return receipt requested, to the address set forth below, or (C) given to a recognized and reputable overnight delivery service, to the address set forth below:

If to the City:	City of Buckeye 530 E. Monroe Avenue Buckeye, Arizona 85236 Attn: Dan Cotterman, City Manager
With copy to:	City of Buckeye 530 E. Monroe Avenue Buckeye, Arizona 85326 Attn: K. Scott McCoy, City Attorney
If to Consultant:	LJA Engineering, Inc. 426 N. 44th Street, Suite 300 Phoenix, AZ 85008 Attn: Alan McKee, Senior Vice President

or at such other address, and to the attention of such other person or officer, as any party may designate in writing by notice duly given pursuant to this subsection. Notices shall be deemed received . (A) when delivered to the party, (B) three business days after being placed in the U.S. Mail, properly addressed, with sufficient postage, or (C) the following business day after being given to a recognized overnight delivery service, with the person giving the notice paying all required charges and instructing the delivery service to deliver on the following business day. If a copy of a notice is also given to a party's counsel or other recipient, the provisions above governing the date on which a notice is deemed to have been received by a party shall mean and refer to the date on which the party, and not its counsel or other recipient to which a copy of the notice may be sent, is deemed to have received the notice.

16.15 Confidentiality of Records. The Consultant shall establish and maintain procedures and controls that are acceptable to the City for the purpose of ensuring that information

contained in its records or obtained from the City or from others in carrying out its obligations under this Agreement shall not be used or disclosed by it, its agents, officers, or employees, except as required to perform the Consultant's duties under this Agreement. Such information shall be expressly marked, designated, identified, or otherwise verbally labeled as 'confidential,' 'internal,' 'restricted,' 'private,' or 'proprietary' at the time of disclosure. Persons requesting such information should be referred to the City. The Consultant also agrees that any information pertaining to individual persons shall not be divulged other than to employees or officers of the Consultant as needed for the performance of duties under this Agreement.

16.16 Information Technology.

A. Limited Access. If necessary for the fulfillment of this Agreement, the City may provide the Consultant with non-exclusive, limited access to the City's information technology infrastructure. The Consultant understands and agrees to abide by all City policies, standards, regulations, and restrictions regarding access and usage of the City's information and communication technology resources. The Consultant shall enforce all such policies, standards, regulations, and restrictions with all the Consultant's employees, agents, or any tier of subcontractor granted access in the performance of this Agreement and shall be granted and authorized only such access as may be necessary for the purpose of fulfilling the requirements of this Agreement.

B. Permitted Access. The Consultant's employees, agents, and subcontractors must receive prior, written approval from the City before being granted access to the City's information and communication technology resources and data. The City, in its sole discretion, shall determine accessibility and limitations thereto. The Consultant agrees that the requirements of this Section shall be incorporated into all subcontractor/subconsultant agreements entered into by the Consultant. It is further agreed that a violation of this Section shall be deemed to cause irreparable harm that justifies injunctive relief in court. Notwithstanding the provisions in Section 14, a violation of this Section may result in immediate termination of this Agreement without notice.

C. Data Confidentiality. All City data and technical information, regardless of form, including originals, images, and reproductions, prepared by, obtained by, or transmitted to the Consultant in connection with this Agreement and expressly marked, designated, identified, or otherwise verbally labeled as 'confidential,' 'internal,' 'restricted,' 'private,' or 'proprietary' at the time of disclosure, are confidential, proprietary information owned by the City. Except as specifically provided in this Agreement, the Consultant shall not, without the prior, written consent of the City Manager or authorized designee, (A) disclose data generated in the performance of the services to any third party, or (B) use City data and information. This confidentiality shall not extend to: (a) information that at the time of disclosure or subsequently is published or otherwise generally available to the public other than through any act or omission on the part of Consultant; (b) information that Consultant can demonstrate by written records was lawfully in the possession of Consultant at the time of disclosure and not otherwise subject to any form of non-disclosure agreement; (c) information that Consultant can demonstrate by written records was acquired from a third party who had the lawful right to make such disclosure; (d) information that Consultant can demonstrate by written records was

independently developed by Consultant without reference to the materials comprising the information disclosed under this Agreement; or (e) information that Consultant is required to disclose pursuant to applicable law, legally enforceable order, decree, or other regulation or rule, or by deposition or trial testimony pursuant to legal process.

D. Data Security. Personal identifying information, financial account information, or restricted City information, whether in electronic format or hard copy, must be secured and protected at all times to avoid unauthorized access. At a minimum, the Consultant must encrypt and/or password-protect electronic files. This includes data saved to laptop computers, computerized devices, or removable storage devices. When City information, regardless of its format, is no longer required by the Consultant to execute the work contracted by the City, the information must be redacted or destroyed through appropriate and secure methods to ensure the information cannot be viewed, accessed, or reconstructed.

E. Compromised Security. In the event that data collected or obtained by the Consultant in connection with this Agreement is believed to have been compromised, the Consultant shall immediately notify the City Manager, or authorized City designee. The Consultant agrees to reimburse the City for any costs incurred by the City to investigate potential breaches of this data by the Consultant and, where applicable, the cost of notifying and/or assisting individuals who may be impacted by the breach.

F. Disengagement. In the event this Agreement is terminated by either party, the Consultant agrees to confer back to the City all of its data, in usable and normalized format, within 30 days of notice of termination. There shall be no charge for the return of City data to the City.

G. Survival. The obligations of the Consultant under this Section 16.16 shall survive for three (3) years following the later of: (i) the termination of this Agreement; and any extension or renewal hereof.

16.17 Records and Audit Rights. To ensure that the Consultant and its subcontractors are complying with the warranty under subsection 16.18, the Consultant's and its subcontractor's books, records, correspondence, accounting procedures and practices, and any other supporting evidence relating to this Agreement, including the papers of any of the Consultant's and its subcontractors' employees who perform any work or services pursuant to this Agreement (all of the foregoing hereinafter referred to as "Records"), shall be open to inspection and subject to audit and/or reproduction during normal working hours by the City, to the extent necessary to adequately permit (A) evaluation and verification of any invoices, payments or claims based on the Consultant's and its subcontractors' actual costs (including direct and indirect costs and overhead allocations) incurred, or units expended directly in the performance of work under this Agreement and (B) evaluation of the Consultant's and its subcontractors' compliance with the Arizona employer sanctions laws referenced in subsection 16.18. To the extent necessary for the City to audit Records as set forth in this subsection, the Consultant and its subcontractors hereby waive any rights to keep such Records confidential. For the purpose of evaluating or verifying such actual or claimed costs or units expended, the City shall have access to said Records, even if located at its subcontractors' facilities, from the effective date of this Agreement for the duration

of the work and until three years after the date of final payment by the City to the Consultant pursuant to this Agreement. The Consultant and its subcontractors shall provide the City with adequate and appropriate workspace so that the City can conduct audits in compliance with the provisions of this subsection. The City shall give the Consultant or its subcontractors five (5) business days' notice of intended audits. The Consultant shall require its subcontractors to comply with the provisions of this subsection by insertion of the requirements hereof in any subcontract pursuant to this Agreement.

16.18 E-verify Requirements. To the extent applicable under ARIZ. REV. STAT. § 41-4401, the Consultant and its subcontractors warrant compliance with all federal immigration laws and regulations that relate to their employees and their compliance with the E-verify requirements under ARIZ. REV. STAT. § 23-214(A). The Consultant's or its subcontractor's failure to comply with such warranty shall be deemed a material breach of this Agreement and may result in the termination of this Agreement by the City.

16.19 Israel. To the extent ARIZ. REV. STAT. § 35-393 through § 35-393.03 are applicable, the parties hereby certify that they are not currently engaged in, and agree for the duration of this Agreement to not engage in, a "boycott" of goods or services from Israel, as that term is defined in ARIZ. REV. STAT. § 35-393.

16.20 Conflicting Terms. In the event of any inconsistency, conflict, or ambiguity among the terms of this Agreement, any amendments, the Scope of Work, any City-approved Purchase Order, or the Fee Proposal, the documents shall govern in the order listed herein.

16.21 Time is of the Essence. The timely completion of the Services by Consultant in a safe and sound manner is of critical importance to the economic circumstances of the City.

16.22 Meaning of Terms. References made in the singular shall include the plural and the masculine shall include the feminine or the neuter.

16.23 Non-Exclusive Contract. This Agreement is entered into with the understanding and agreement that it is for the sole convenience of the City. The City reserves the right to obtain like goods and services from another source when necessary.

16.24 Forced Labor of Ethnic Uyghurs. To the extent applicable under ARIZ. REV. STAT. § 35-394, the Vendor warrants and certifies that it does not currently, and agrees for the duration of this Agreement that it will not use the forced labor, any goods or services produced by the forced labor, or any contractors, subcontractors, or suppliers that use the forced labor or any goods or services produced by the forced labor of ethnic Uyghurs in the People's Republic of China. If the Vendor becomes aware that it is not in compliance with this paragraph, the Vendor shall notify the Town of the noncompliance within five business days of becoming aware of it. If the Vendor fails to provide a written certification that the Vendor has remedied the noncompliance within 180 days after that, this Agreement shall terminate unless the termination date of this Agreement occurs before the end of the remedy, in which case this Agreement terminates on the contract termination date.

16.25 Clickwrap Terms Excluded. In the event the Contractor's terms of sale or service were provided to the City only upon "acceptance" of a "clickwrap" or "clickthrough" agreement, such terms of sale or service shall not be binding upon the City. No oral agreement, "clickwrap" or "clickthrough" agreement or other understanding shall in any way modify a City-issued or approved contract or these Standard Terms and Conditions.

[SIGNATURES ON FOLLOWING PAGE]

IN WITNESS WHEREOF, the parties hereto have executed this Agreement as of the date and year first set forth above.

"**City**"

CITY OF BUCKEYE,
an Arizona municipal corporation

Dan Cotterman, City Manager

"**Consultant**"

LJA Engineering, Inc
a Texas Corporation

By: _____

Name: Alan McKee, PE

Title: Sr. Vice President

Adobe Acrobat Sign Transaction Number: CBJCHBCAABAAW_Qxd8pgppHF6CTAhmHUjBCQ6BCIL7Ag

EXHIBIT A
TO
PROFESSIONAL SERVICES AGREEMENT
BETWEEN
THE CITY OF BUCKEYE
AND
LJA ENGINEERING, INC.

[Scope of Work and Fee Proposal]

See following page(s).

480.571.6150
www.LJA.com
426 N. 44th Street, Suite 300, Phoenix, Arizona 85008

April 2, 2024 **PROPOSAL**

Mr. Javier Setovich, PE
Deputy City Manager
City of Buckeye
530 E Monroe Ave.
Buckeye, Arizona 85326

Re: Capital Improvement Program Interim Management
City of Buckeye
LJA Proposal No. 24-28653

Dear Mr. Setovich,

LJA Engineering, Inc. (LJA) is pleased to submit this Scope of Work (SOW) to provide Capital Improvement Program (CIP) Interim Management for the City of Buckeye (COB).

SCOPE OF WORK

715 – Municipality Consultation: LJA will provide consultation services that will include the following:

1) Evaluate: LJA will evaluate the program, projects, processes by taking the following actions.
    a. Meetings with key CIP staff and management;
    b. Meetings with all CIP project managers (PMs), and Senior PMs to gather feedback and start collaborative feedback from existing staff;
    c. Meetings with all internal customers from different departments to include at a minimum, Public Works, Community Services, Police Department, Fire-Medical-Rescue Department, Water Resources, Information Technology, and other applicable customers;
    d. Meetings with key process stakeholders including City Manager's Office, with special emphasis on Finance's budget and contract management groups;
    e. Gain insight into project management systems and reconciliation to financial systems;
    f. Review all existing documents, processes, reporting, tracking, key performance indicators, and software platforms;
    g. Act as day-to-day CIP Manager, manage existing staff, organizing people and developing processes (such as process flow-charts), and report directly to the Deputy City Manager (DCM);
    h. LJA will highlight any matters of concern in the projects related to Scope/Schedule/budget.
    i. Identify key issues and identify next steps for Development phase and request approval from the DCM.

Success from these services is constituted by a successful identification of the areas of improvements of the CIP program along with day-to-day management. LJA realizes change can be challenging within an organization and will take special care to ensure the CIP updates are well received by the existing staff as well as take steps to ensure future staff has the resources after the conclusion of the services proposed herein.

Z99 – Reimbursables: Miscellaneous reimbursable expenses such as expenses for courier, reproduction, and mileage, etc. will be provided for this project on a time and material basis as authorized by the Client. The estimated reimbursable expenses are shown in the compensation summary.

LJA proposes three main labor categories to be provided throughout the duration of the agreement:

Role of Director: Liaise with city leadership and management staff. Heavy early involvement with the identification of improvement areas. The Director will act as internal QA/QC to any documents produced with the scope of services. The Director will lead the change management alongside City Leadership.

Role of Senior PM: Capture current CIP status, provide majority of in-office coverage, manage day to day CIP management by running team and meetings. Become a subject matter expert on COB processes, people, and project-level improvements. Staff Management, write reports, training and metric updates.

Role of Office support: Technical support on clerical updates and the various tools anticipated within the scope. Primary software is strong proficiency in the Microsoft Office suite with emphasis in Excel, Project, and Word.

COMPENSATION SCHEDULE

We propose to provide the scope of services described above on a Fixed Fee (FF) and will provide for a full time representative throughout the duration of the services. The breakdown per task is detailed below:

Task	Description	Fee Basis	Fee
715	Municipality Consulting	Fixed Fee	$150,000
TOTAL			**$150,000**
Z99	Expenses	T&M	$ 2,000

Schedule: LJA anticipates approximately a 3-month schedule.
1st Month - $60K, 2nd Month $50K, 3rd Month $42K

We appreciate the opportunity to submit this proposal and look forward to working with you on this project. If you have any questions, please call Mr. James Shano at 623.695.6986 or Clay Rumbaoa at 808.436.0024.

Sincerely,

James Shano

James P Shano, PE
Director

Clay Rumbaoa, PE
Vice President – Phoenix Region

PROPOSAL ACCEPTED BY:
THE CITY OF BUCKEYE

By: _____

Name: Dan Cotterman

Title: City manager

Date: Apr 5, 2024

Adobe Acrobat Sign Transaction Number: CBJCHBCAABAAW_Qxd8pgppHF6CTAhmHUjBCQ6BCIL7Ag

CITY OF BUCKEYE
Regular Council Meeting
COUNCIL ACTION REPORT

MEETING DATE: 12/17/24	**AGENDA ITEM:** 4.P. FIN - Cooperative Contract Purchase Addendum, Contract No. 2025217 with Safeware, Inc.
DATE PREPARED: 12/17/24	**DISTRICT NO.:** All
STAFF LIAISON: Rob Roach, Grant Program Manager, rroach@buckeyeaz.gov, (623) 349-6165	
DEPARTMENT: Financial Services	**AGENDA ITEM TYPE:** Consent Agenda Items / New Business

ACTION/MOTION: (This language identifies the formal motion to be made by the Council)
Council to take action to approve the Cooperative Contract Purchase Addendum, Contract No. 2025217 with Safeware, Inc. between the City of Buckeye, an Arizona municipal corporation, and Safeware, Inc., a Maryland corporation; and authorizing the City Manager to execute and deliver said Cooperative Contract Purchase Addendum (CCPA) on behalf of the City of Buckeye.

SUMMARY

PROJECT DESCRIPTION:
City Council has previously approved the $350,000 grant award from the Urban Area Security Initiative (UASI) through the Arizona Department of Homeland Security to purchase a new armored rescue police vehicle. This piece of equipment will be utilized for high-risk calls for service. This vehicle will enhance the capabilities of the Buckeye Police Department to ensure all members of the community continue to receive high-quality service, while also protecting Buckeye Police Department personnel and the general public.

BENEFITS:
The approval of this Cooperative Contract Purchase Addendum, Contract No. 2025217 with Safeware, Inc. will ensure Buckeye Police Department personnel have a new armored rescue vehicle to protect law enforcement personnel and protect civilians and possible hostages by enhancing public and first-responder safety. The armored rescue vehicle will also be available to respond to neighboring jurisdictions' calls for aid. The current armored rescue vehicle has reached the end of its life expectancy and frequently experiences higher downtime to Buckeye Police Department personnel which results in a lack of timely services. This purchase will utilize Sourcewell cooperative contract #080922-SAF, expiring on 10/7/2026. Sourcewell has completed the due diligence portion in the bid selection process; the cooperative purchase contract allows for expedited ordering of vehicles and equipment. The contract and quote are attached.

FUTURE ACTION:
No future action is contemplated.

FINANCIAL IMPACT STATEMENT:
The total cost of the armored rescue vehicle is $460,000. The Federal grant portion is $350,000. While there is no match requirement, any costs exceeding $350,000 for the purchase of the armored rescue vehicle, estimated at approximately $110,000, will come from Buckeye Police Department's future budget. Estimated production time is up to 18 months. Additionally, any required future maintenance will also become a part of the Buckeye Police Department's annual budget.

BUDGETED:
Yes

FISCAL YEAR:
2025 and 2026

FUND/DEPARTMENT:
Police Department

Items related to a project or facility location must include an attached vicinity map for Council Review.
ATTACHMENTS:
CAR_Recap_Summary_UASI_-_Bearcat_-_Procurement.pdf
Safeware-Quotation.pdf
Contract No. 2025217.pdf

Cooperative Contract Purchase Addendum, Contract No. 2025217 with Safeware, Inc. Summary Recap

Project Description:

The City of Buckeye Council has previously approved the $350,000 grant award from UASI through the Arizona Department of Homeland Security to purchase a new armored rescue police vehicle. This piece of equipment will be utilized for high-risk calls for service. This vehicle will enhance the capabilities of the Buckeye Police Department to ensure all members of the community continue to receive high-quality service, while also protecting Buckeye Police Department personnel and the general public.

Project Cost

- $ 460,000

Required Match

- The Federal grant portion is $350,000. While there is no match requirement, any costs exceeding $350,000 for the purchase of the armored rescue vehicle, estimated at approximately $110,000, will come from Buckeye Police Department's future budget. Estimate production time is up to 18 months. Additionally, any required maintenance will also become a part of Buckeye Police Department's annual budget.

Grant Amount

- $ 350,000

Future Action

- No future action contemplated

Objectives and Expected Outcomes

The approval of this Cooperative Contract Purchase Addendum will ensure Buckeye Police Department personnel have a new armored rescue vehicle to protect law enforcement personnel and protect civilians and possible hostages by enhancing public and first responder safety. The armored rescue vehicle will also be available to respond to neighboring jurisdictions calls for aid. The current armored rescue vehicle has reached the end of its life expectancy and frequently experiences higher downtime to Buckeye Police Department personnel which results in a lack of timely services. This purchase will be utilizing Sourcewell cooperative contract #080922-SAF, expiring on 10/07/2026. Sourcewell has completed the due diligence in the bid selection process; the cooperative purchase contract allows for expedited ordering of vehicles and equipment. Contract and quote are attached.

Fiscal Year

- 2026

QUOTATION

Safeware, Inc.
4403 Forbes Blvd.
Lanham, MD 20706-4328
USA
301-683-1234
www.safewareinc.com

Order Number	
10179704	
Order Date	Page
10/24/2024 12:37:12	1 of 4

Quote Expires On: 11/23/2024

Contract No: Sourcewell #080922-SAF PS & EM

Bill To: **Customer ID:** 82181

City of Buckeye
Accounts Payable
530 E Monroe
Buckeye, AZ 85326

623-349-6431

Ship To:

Buckeye Police Department
21699 W. Yuma Rd
Buckeye, AZ 85326

PO Number	*Taker*	*Email*
BEARCAT	Debbie Lundquist	dlundquist@safewareinc.com
Freight Terms	***Phone***	***Fax***
Bill Freight	303-322-3577	
Sales Representative		
Rob Berner		

Quantities					*Item ID* / *Item Description*	*Pricing UOM* / *Unit Size*	*Unit Price*	*Extended Price*
Ordered	*Allocated*	*Remaining*	*UOM* / *Unit Size*	*Disp.*				
1.00	0.00	1.00	EA		LEN BC55003-BASE	EA	256,591.90	256,591.90
			1.0		Lenco BearCat Base Model	1.0		
1.00	0.00	1.00	EA		LEN LED_RED_BLUE	EA	0.00	0.00
			1.0		LED - RED AND BLUE	1.0		
			Ordered As:		LED_RED_BLUE			
1.00	0.00	1.00	EA		LEN LUSTERLESS_BLACK	EA	0.00	0.00
			1.0		Exterior Paint Color: Lusterless Black	1.0		
			Ordered As:		LUSTERLESS_BLACK			
1.00	0.00	1.00	EA		LEN BC3WOFFRD	EA	40,908.51	40,908.51
			1.0		BearCat G3 4-Wheel Off-Road Upgrade Pkg w/Run-Flats	1.0		
			Ordered As:		BC3WOFFRD			
1.00	0.00	1.00	EA		LEN BCDLEN	EA	10,632.98	10,632.98
			1.0		Diesel Engine, 6.7L Turbo	1.0		
			Ordered As:		BCDLEN			
1.00	0.00	1.00	EA		LEN BC4DR	EA	10,450.00	10,450.00
			1.0		4-Door Configuration Rear Flip Seats Included	1.0		
			Ordered As:		BC4DR			
8.00	0.00	8.00	EA		LEN BCGP7	EA	242.55	1,940.40

SAFEWARE

QUOTATION

Safeware, Inc.
4403 Forbes Blvd.
Lanham, MD 20706-4328
USA
301-683-1234
www.safewareinc.com

Order Number	
10179704	
Order Date	Page
10/24/2024 12:37:12	2 of 4

Quote Expires On: 11/23/2024
Contract No: Sourcewell #080922-SAF PS & EM

Quantities					Item ID / Item Description	Pricing UOM / Unit Size	Unit Price	Extended Price
Ordered	Allocated	Remaining	UOM / Unit Size	Disp.				
			1.0		(1) 7" Vertical GunPort Upgrade	1.0		
					Ordered As: BCGP7			
1.00	0.00	1.00	EA		LEN BCMIR	EA	1,604.26	1,604.26
			1.0		Electric Power Heated Mirrors	1.0		
					Ordered As: BCMIR			
1.00	0.00	1.00	EA		LEN BC360DEG	EA	4,704.25	4,704.25
			1.0		360 Camera System	1.0		
					Ordered As: BC360DEG			
2.00	0.00	2.00	EA		LEN BCINSRA	EA	534.04	1,068.08
			1.0		Radio Prep Package (1)	1.0		
					Ordered As: BCINSRA			
1.00	0.00	1.00	EA		LEN BCINSRA-RW	EA	561.70	561.70
			1.0		Radio Prep Package - Driver Side Rear Wall Only, (Max 1)	1.0		
					Ordered As: BCINSRA-RW			
1.00	0.00	1.00	EA		LEN BCHACUP	EA	7,640.42	7,640.42
			1.0		Rear A/C _Heating System High Capacity Upgrade (requires BCHAC adds evaporator/ compressor)	1.0		
					Ordered As: BCHACUP			
1.00	0.00	1.00	EA		LEN BCHYDRAM	EA	15,930.85	15,930.85
			1.0		Hydraulic Front Mounted Receiver with Ram Post and Plate	1.0		
					Ordered As: BCHYDRAM			
1.00	0.00	1.00	EA		LEN BCBAR	EA	1,276.59	1,276.59
			1.0		Break and Rake	1.0		
					Ordered As: BCBAR			
1.00	0.00	1.00	EA		LEN BCDRACOPREP	EA	2,017.02	2,017.02
			1.0		Draco Prep Package	1.0		
					Ordered As: BCDRACOPREP			
1.00	0.00	1.00	EA		LEN BCVSPL	EA	6,491.49	6,491.49
			1.0		VSP Style Low Profile & Scene Lighting Pkg	1.0		
					Ordered As: BCVSPL			
2.00	0.00	2.00	EA		LEN BCSLLED	EA	1,493.61	2,987.22
			1.0		Roof Mounted Remote Control	1.0		

SAFEWARE

QUOTATION

Safeware, Inc.
4403 Forbes Blvd.
Lanham, MD 20706-4328
USA
301-683-1234
www.safewareinc.com

Order Number	
10179704	
Order Date	Page
10/24/2024 12:37:12	3 of 4

Quote Expires On: 11/23/2024
Contract No: Sourcewell #080922-SAF PS & EM

Quantities					Item ID / Item Description	Pricing UOM / Unit Size	Unit Price	Extended Price
Ordered	Allocated	Remaining	UOM / Unit Size	Disp.				
					Spot Light LED (4)			
					Ordered As: BCSLLED			
1.00	0.00	1.00	EA		LEN BCHIDL	EA	1,425.53	1,425.53
				1.0	High Intensity Driving Lights in Front Bumper	1.0		
					Ordered As: BCHIDL			
1.00	0.00	1.00	EA		LEN BCFIL	EA	3,176.60	3,176.60
				1.0	Fender Intersection Lights	1.0		
					Ordered As: BCFIL			
1.00	0.00	1.00	EA		LEN BCTDL	EA	1,971.28	1,971.28
				1.0	Take Down Light (Bumper Mounted)	1.0		
					Ordered As: BCTDL			
1.00	0.00	1.00	EA		LEN BCINV2000	EA	6,794.68	6,794.68
				1.0	AC-DC Power Inverter 2,000 Watt with Battery Charge Feature	1.0		
					Ordered As: BCINV2000			
1.00	0.00	1.00	EA		LEN BCPCUPOLA	EA	33,601.07	33,601.07
				1.0	Police Cupola w/Glass & Barn Doors	1.0		
					Ordered As: BCPCUPOLA			
1.00	0.00	1.00	EA		LEN BCAOPG	EA	2,059.57	2,059.57
				1.0	Armored Oil Pan Guard	1.0		
					Ordered As: BCAOPG			
2.00	0.00	2.00	EA		LEN BCBSRS	EA	2,574.47	5,148.94
				1.0	Ballistic Skip Round Shield	1.0		
					Ordered As: BCBSRS			
1.00	0.00	1.00	EA		LEN BCPJ	EA	4,641.49	4,641.49
				1.0	Bedrock Paint	1.0		
					Ordered As: BCPJ			
1.00	0.00	1.00	EA		LEN BCOTPE	EA	2,712.77	2,712.77
				1.0	Optical Traffic Preemption Emitter	1.0		
					Ordered As: BCOTPE			

QUOTATION

Safeware, Inc.
4403 Forbes Blvd.
Lanham, MD 20706-4328
USA
301-683-1234
www.safewareinc.com

Order Number	
10179704	
Order Date	Page
10/24/2024 12:37:12	4 of 4

Quote Expires On: 11/23/2024

Contract No: Sourcewell #080922-SAF PS & EM

Quantities					*Item ID* / *Item Description*	*Pricing UOM* / *Unit Size*	*Unit Price*	*Extended Price*
Ordered	*Allocated*	*Remaining*	*UOM* / *Unit Size*	*Disp.*				

Total Lines: 26

SUB-TOTAL:	426,337.60
TAX:	32,257.61
AMOUNT DUE:	**458,595.21**

Actual freight added per freight terms

COOPERATIVE CONTRACT PURCHASE ADDENDUM (CCPA)
BETWEEN THE CITY OF BUCKEYE
AND
SAFEWARE INC.

PUBLIC SAFETY AND EMERGENCY MANAGEMENT EQUIPMENT, TOOL AND SUPPLY CATALOG SOLUTIONS
CONTRACT NO. 2025217

THIS COOPERATIVE CONTRACT PURCHASE ADDENDUM (this "Addendum") is entered into as of_____, between the City of Buckeye, an Arizona municipal corporation (the "City"), and Safeware Inc. a Maryland corporation (the "Contractor").

WHEREAS, after a competitive procurement process, which is documented in the Award attached hereto as **Exhibit A** and incorporated herein by reference, Sourcewell Contract entered into Contract No. 080922-SAF, dated October 14, 2022 with the Contractor (such contract and subsequent amendments thereto here referred to as the "Sourcewell Contract"), which is attached hereto as **Exhibit A** and incorporated herein by reference; and

WHEREAS, the City is permitted by Section 24-3-16 of the City Procurement Code to make purchases via cooperative purchasing pursuant to a cooperative purchasing contract; and

WHEREAS, the Contractor has made a proposal to the City, which is attached hereto as **Exhibit B** and incorporated herein by reference (the "Contract"); and

WHEREAS, the City desires to accept the Proposal and enter into contract with the Contractor under the terms and conditions of the Sourcewell Contract, by issuing this Addendum to said contract.

THEREFORE, the City now enters into this Addendum with Contractor for the goods and services set forth in the Proposal. This Addendum incorporates the terms and conditions of the Sourcewell Contract, except to the extent superseded herein. All references in the Sourcewell Contract shall be read to refer to the City of Buckeye. This Addendum shall be effective as of the date set forth below for approval and remain in effect for the remainder of the Sourcewell Contract 080922-SAF, unless such term is modified or extended pursuant to the terms of the Sourcewell Contract. Payments to the Contractor shall be calculated in accordance with the Fee Schedule, which is attached hereto as part of **Exhibit B**, in a total amount not to exceed $460,000.00.

FURTHER, this Addendum is subject to cancellation pursuant to ARS §38-511.

FURTHER, to the extent applicable, the Contractor and its subcontractors warrant compliance with all federal immigration laws and regulations that relate to their employees and their compliance with the E-verify requirements under A.R.S. § 23-214(A). The Contractor's or its subcontractors' failure to comply with such warranty shall be deemed a material breach of this Addendum and may result in the termination of this Addendum by the City. The City retains the

right to inspect the papers of the Contractor's or its subcontractors' employees who perform any work or services pursuant to this Addendum to ensure compliance with these warranties.

FURTHER, to the extent applicable, the Contractor warrants that it is not participating and will not participate in prohibited activity in contravention of A.R.S. § 35-393.01.

FURTHER, to the extent applicable under ARIZ. REV. STAT. § 35-394, Contractor certifies that it does not currently, and agrees for the duration of this Agreement that it will not use (i) the forced labor of ethnic Uyghurs in the Peoples Republic of China ("ethnic Uyghurs"), (ii) any goods or services produced by the forced labor of ethnic Uyghurs, or (iii) any Contractors, subcontractors, or suppliers that use the forced labor or any goods or services produced by the forced labor of ethnic Uyghurs. If Contractor becomes aware that it is not in compliance with this paragraph, Contractor shall notify the City of the noncompliance within five (5) business days of becoming aware of it. If Contractor fails to provide a written certification that Contractor has remedied the noncompliance within one hundred eighty (180) days after that, this Agreement shall terminate unless the termination date of this Agreement occurs before the end of the remedy period, in which case this Agreement terminates on the Agreement termination date.

FURTHER, the Parties agree that the Addendum and Exhibits thereto shall be governed by State of Arizona law and suits pertaining to the Addendum and Exhibits thereto may only be brought in courts located in Maricopa County, Arizona.

FURTHER, all modifications, including but not limited to service additions and deletions, will be made in writing and with the written agreement of both parties.

FURTHER, in the event of any inconsistency between this Addendum, Sourcewell Contract and **Exhibit B**, the documents shall govern in that order.

CLICKWRAP TERMS EXCLUDED, in the event the Consultant's terms of sale or service were provided to the City only upon "acceptance" of a "clickwrap" or "clickthrough" agreement, such terms of sale or service shall not be binding upon the City. No oral agreement, "clickwrap" or "clickthrough" agreement or other understanding shall in any way modify a City issued or approved contract or the terms of this Cooperative Contract Purchase Addendum (CCPA).

THEREFORE, the Parties have executed this Addendum as of the date first set forth above.

CITY

THE CITY OF BUCKEYE,
an Arizona Municipal corporation

_____
Dan Cotterman, City Manager

CONTRACTOR

SAFEWARE INC.,
a Maryland corporation

By: Jeannette Roscoe

Title: Vice President

ATTEST:

Lucinda Aja, City Clerk

RECOMMENDED:

William Kauppi

William Kauppi, Chief Financial Officer

APPROVED AS TO FORM:

K. Scott McCoy, City Attorney

EXHIBIT A
TO
COOPERATIVE CONTRACT PURCHASE ADDENDUM
CONTRACT NO. 2025217

[Sourcewell Contract]

See following page(s).

DocuSign Envelope ID: E368429B-05C4-4DC1-A1DB-D719A6BD39BC

Solicitation Number: RFP #080922

CONTRACT

This Contract is between Sourcewell, 202 12th Street Northeast, P.O. Box 219, Staples, MN 56479 (Sourcewell) and Safeware, Inc., 4403 Forbes Blvd., Lanham, MD 20706 (Supplier).

Sourcewell is a State of Minnesota local government unit and service cooperative created under the laws of the State of Minnesota (Minnesota Statutes Section 123A.21) that offers cooperative procurement solutions to government entities. Participation is open to eligible federal, state/province, and municipal governmental entities, higher education, K-12 education, nonprofit, tribal government, and other public entities located in the United States and Canada. Sourcewell issued a public solicitation for Public Safety and Emergency Management Equipment, Tool, and Supply Catalog Solutions from which Supplier was awarded a contract.

Supplier desires to contract with Sourcewell to provide equipment, products, or services to Sourcewell and the entities that access Sourcewell's cooperative purchasing contracts (Participating Entities).

1. TERM OF CONTRACT

A. EFFECTIVE DATE. This Contract is effective upon the date of the final signature below.

B. EXPIRATION DATE AND EXTENSION. This Contract expires October 7, 2026, unless it is cancelled sooner pursuant to Article 22. This Contract may be extended one additional year upon the request of Sourcewell and written agreement by Supplier.

C. SURVIVAL OF TERMS. Notwithstanding any expiration or termination of this Contract, all payment obligations incurred prior to expiration or termination will survive, as will the following: Articles 11 through 14 survive the expiration or cancellation of this Contract. All other rights will cease upon expiration or termination of this Contract.

2. EQUIPMENT, PRODUCTS, OR SERVICES

A. EQUIPMENT, PRODUCTS, OR SERVICES. Supplier will provide the Equipment, Products, or Services as stated in its Proposal submitted under the Solicitation Number listed above. Supplier's Equipment, Products, or Services Proposal (Proposal) is attached and incorporated into this Contract.

DocuSign Envelope ID: E368429B-05C4-4DC1-A1DB-D719A6BD39BC

All Equipment and Products provided under this Contract must be new and the current model. Supplier may offer close-out or refurbished Equipment or Products if they are clearly indicated in Supplier's product and pricing list. Unless agreed to by the Participating Entities in advance, Equipment or Products must be delivered as operational to the Participating Entity's site.

This Contract offers an indefinite quantity of sales, and while substantial volume is anticipated, sales and sales volume are not guaranteed.

B. WARRANTY. Supplier warrants that all Equipment, Products, and Services furnished are free from liens and encumbrances, and are free from defects in design, materials, and workmanship. In addition, Supplier warrants the Equipment, Products, and Services are suitable for and will perform in accordance with the ordinary use for which they are intended. Supplier's dealers and distributors must agree to assist the Participating Entity in reaching a resolution in any dispute over warranty terms with the manufacturer. Any manufacturer's warranty that extends beyond the expiration of the Supplier's warranty will be passed on to the Participating Entity.

C. DEALERS, DISTRIBUTORS, AND/OR RESELLERS. Upon Contract execution and throughout the Contract term, Supplier must provide to Sourcewell a current means to validate or authenticate Supplier's authorized dealers, distributors, or resellers relative to the Equipment, Products, and Services offered under this Contract, which will be incorporated into this Contract by reference. It is the Supplier's responsibility to ensure Sourcewell receives the most current information.

3. PRICING

All Equipment, Products, or Services under this Contract will be priced at or below the price stated in Supplier's Proposal.

When providing pricing quotes to Participating Entities, all pricing quoted must reflect a Participating Entity's total cost of acquisition. This means that the quoted cost is for delivered Equipment, Products, and Services that are operational for their intended purpose, and includes all costs to the Participating Entity's requested delivery location.

Regardless of the payment method chosen by the Participating Entity, the total cost associated with any purchase option of the Equipment, Products, or Services must always be disclosed in the pricing quote to the applicable Participating Entity at the time of purchase.

A. SHIPPING AND SHIPPING COSTS. All delivered Equipment and Products must be properly packaged. Damaged Equipment and Products may be rejected. If the damage is not readily apparent at the time of delivery, Supplier must permit the Equipment and Products to be returned within a reasonable time at no cost to Sourcewell or its Participating Entities. Participating Entities reserve the right to inspect the Equipment and Products at a reasonable

DocuSign Envelope ID: E368429B-05C4-4DC1-A1DB-D719A6BD39BC

time after delivery where circumstances or conditions prevent effective inspection of the Equipment and Products at the time of delivery. In the event of the delivery of nonconforming Equipment and Products, the Participating Entity will notify the Supplier as soon as possible and the Supplier will replace nonconforming Equipment and Products with conforming Equipment and Products that are acceptable to the Participating Entity.

Supplier must arrange for and pay for the return shipment on Equipment and Products that arrive in a defective or inoperable condition.

Sourcewell may declare the Supplier in breach of this Contract if the Supplier intentionally delivers substandard or inferior Equipment or Products.

B. SALES TAX. Each Participating Entity is responsible for supplying the Supplier with valid tax-exemption certification(s). When ordering, a Participating Entity must indicate if it is a tax-exempt entity.

C. HOT LIST PRICING. At any time during this Contract, Supplier may offer a specific selection of Equipment, Products, or Services at discounts greater than those listed in the Contract. When Supplier determines it will offer Hot List Pricing, it must be submitted electronically to Sourcewell in a line-item format. Equipment, Products, or Services may be added or removed from the Hot List at any time through a Sourcewell Price and Product Change Form as defined in Article 4 below.

Hot List program and pricing may also be used to discount and liquidate close-out and discontinued Equipment and Products as long as those close-out and discontinued items are clearly identified as such. Current ordering process and administrative fees apply. Hot List Pricing must be published and made available to all Participating Entities.

4. PRODUCT AND PRICING CHANGE REQUESTS

Supplier may request Equipment, Product, or Service changes, additions, or deletions at any time. All requests must be made in writing by submitting a signed Sourcewell Price and Product Change Request Form to the assigned Sourcewell Supplier Development Administrator. This approved form is available from the assigned Sourcewell Supplier Development Administrator. At a minimum, the request must:

- Identify the applicable Sourcewell contract number;
- Clearly specify the requested change;
- Provide sufficient detail to justify the requested change;
- Individually list all Equipment, Products, or Services affected by the requested change, along with the requested change (e.g., addition, deletion, price change); and

DocuSign Envelope ID: E368429B-05C4-4DC1-A1DB-D719A6BD39BC

- Include a complete restatement of pricing documentation in Microsoft Excel with the effective date of the modified pricing, or product addition or deletion. The new pricing restatement must include all Equipment, Products, and Services offered, even for those items where pricing remains unchanged.

A fully executed Sourcewell Price and Product Request Form will become an amendment to this Contract and will be incorporated by reference.

5. PARTICIPATION, CONTRACT ACCESS, AND PARTICIPATING ENTITY REQUIREMENTS

A. PARTICIPATION. Sourcewell's cooperative contracts are available and open to public and nonprofit entities across the United States and Canada; such as federal, state/province, municipal, K-12 and higher education, tribal government, and other public entities.

The benefits of this Contract should be available to all Participating Entities that can legally access the Equipment, Products, or Services under this Contract. A Participating Entity's authority to access this Contract is determined through its cooperative purchasing, interlocal, or joint powers laws. Any entity accessing benefits of this Contract will be considered a Service Member of Sourcewell during such time of access. Supplier understands that a Participating Entity's use of this Contract is at the Participating Entity's sole convenience and Participating Entities reserve the right to obtain like Equipment, Products, or Services from any other source.

Supplier is responsible for familiarizing its sales and service forces with Sourcewell contract use eligibility requirements and documentation and will encourage potential participating entities to join Sourcewell. Sourcewell reserves the right to add and remove Participating Entities to its roster during the term of this Contract.

B. PUBLIC FACILITIES. Supplier's employees may be required to perform work at government-owned facilities, including schools. Supplier's employees and agents must conduct themselves in a professional manner while on the premises, and in accordance with Participating Entity policies and procedures, and all applicable laws.

6. PARTICIPATING ENTITY USE AND PURCHASING

A. ORDERS AND PAYMENT. To access the contracted Equipment, Products, or Services under this Contract, a Participating Entity must clearly indicate to Supplier that it intends to access this Contract; however, order flow and procedure will be developed jointly between Sourcewell and Supplier. Typically, a Participating Entity will issue an order directly to Supplier or its authorized subsidiary, distributor, dealer, or reseller. If a Participating Entity issues a purchase order, it may use its own forms, but the purchase order should clearly note the applicable Sourcewell contract number. All Participating Entity orders under this Contract must be issued prior to expiration or cancellation of this Contract; however, Supplier performance, Participating Entity

DocuSign Envelope ID: E368429B-05C4-4DC1-A1DB-D719A6BD39BC

payment obligations, and any applicable warranty periods or other Supplier or Participating Entity obligations may extend beyond the term of this Contract.

Supplier's acceptable forms of payment are included in its attached Proposal. Participating Entities will be solely responsible for payment and Sourcewell will have no liability for any unpaid invoice of any Participating Entity.

B. ADDITIONAL TERMS AND CONDITIONS/PARTICIPATING ADDENDUM. Additional terms and conditions to a purchase order, or other required transaction documentation, may be negotiated between a Participating Entity and Supplier, such as job or industry-specific requirements, legal requirements (e.g., affirmative action or immigration status requirements), or specific local policy requirements. Some Participating Entities may require the use of a Participating Addendum, the terms of which will be negotiated directly between the Participating Entity and the Supplier or its authorized dealers, distributors, or resellers, as applicable. Any negotiated additional terms and conditions must never be less favorable to the Participating Entity than what is contained in this Contract.

C. SPECIALIZED SERVICE REQUIREMENTS. In the event that the Participating Entity requires service or specialized performance requirements not addressed in this Contract (such as e-commerce specifications, specialized delivery requirements, or other specifications and requirements), the Participating Entity and the Supplier may enter into a separate, standalone agreement, apart from this Contract. Sourcewell, including its agents and employees, will not be made a party to a claim for breach of such agreement.

D. TERMINATION OF ORDERS. Participating Entities may terminate an order, in whole or in part, immediately upon notice to Supplier in the event of any of the following events:

1. The Participating Entity fails to receive funding or appropriation from its governing body at levels sufficient to pay for the equipment, products, or services to be purchased; or
2. Federal, state, or provincial laws or regulations prohibit the purchase or change the Participating Entity's requirements.

E. GOVERNING LAW AND VENUE. The governing law and venue for any action related to a Participating Entity's order will be determined by the Participating Entity making the purchase.

7. CUSTOMER SERVICE

A. PRIMARY ACCOUNT REPRESENTATIVE. Supplier will assign an Account Representative to Sourcewell for this Contract and must provide prompt notice to Sourcewell if that person is changed. The Account Representative will be responsible for:

- Maintenance and management of this Contract;

DocuSign Envelope ID: E368429B-05C4-4DC1-A1DB-D719A6BD39BC

- Timely response to all Sourcewell and Participating Entity inquiries; and
- Business reviews to Sourcewell and Participating Entities, if applicable.

B. BUSINESS REVIEWS. Supplier must perform a minimum of one business review with Sourcewell per contract year. The business review will cover sales to Participating Entities, pricing and contract terms, administrative fees, sales data reports, performance issues, supply issues, customer issues, and any other necessary information.

8. REPORT ON CONTRACT SALES ACTIVITY AND ADMINISTRATIVE FEE PAYMENT

A. CONTRACT SALES ACTIVITY REPORT. Each calendar quarter, Supplier must provide a contract sales activity report (Report) to the Sourcewell Supplier Development Administrator assigned to this Contract. Reports are due no later than 45 days after the end of each calendar quarter. A Report must be provided regardless of the number or amount of sales during that quarter (i.e., if there are no sales, Supplier must submit a report indicating no sales were made).

The Report must contain the following fields:

- Participating Entity Name (e.g., City of Staples Highway Department);
- Participating Entity Physical Street Address;
- Participating Entity City;
- Participating Entity State/Province;
- Participating Entity Zip/Postal Code;
- Participating Entity Contact Name;
- Participating Entity Contact Email Address;
- Participating Entity Contact Telephone Number;
- Sourcewell Assigned Entity/Participating Entity Number;
- Item Purchased Description;
- Item Purchased Price;
- Sourcewell Administrative Fee Applied; and
- Date Purchase was invoiced/sale was recognized as revenue by Supplier.

B. ADMINISTRATIVE FEE. In consideration for the support and services provided by Sourcewell, the Supplier will pay an administrative fee to Sourcewell on all Equipment, Products, and Services provided to Participating Entities. The Administrative Fee must be included in, and not added to, the pricing. Supplier may not charge Participating Entities more than the contracted price to offset the Administrative Fee.

The Supplier will submit payment to Sourcewell for the percentage of administrative fee stated in the Proposal multiplied by the total sales of all Equipment, Products, and Services purchased by Participating Entities under this Contract during each calendar quarter. Payments should

DocuSign Envelope ID: E368429B-05C4-4DC1-A1DB-D719A6BD39BC

note the Supplier's name and Sourcewell-assigned contract number in the memo; and must be mailed to the address above "Attn: Accounts Receivable" or remitted electronically to Sourcewell's banking institution per Sourcewell's Finance department instructions. Payments must be received no later than 45 calendar days after the end of each calendar quarter.

Supplier agrees to cooperate with Sourcewell in auditing transactions under this Contract to ensure that the administrative fee is paid on all items purchased under this Contract.

In the event the Supplier is delinquent in any undisputed administrative fees, Sourcewell reserves the right to cancel this Contract and reject any proposal submitted by the Supplier in any subsequent solicitation. In the event this Contract is cancelled by either party prior to the Contract's expiration date, the administrative fee payment will be due no more than 30 days from the cancellation date.

9. AUTHORIZED REPRESENTATIVE

Sourcewell's Authorized Representative is its Chief Procurement Officer.

Supplier's Authorized Representative is the person named in the Supplier's Proposal. If Supplier's Authorized Representative changes at any time during this Contract, Supplier must promptly notify Sourcewell in writing.

10. AUDIT, ASSIGNMENT, AMENDMENTS, WAIVER, AND CONTRACT COMPLETE

A. AUDIT. Pursuant to Minnesota Statutes Section 16C.05, subdivision 5, the books, records, documents, and accounting procedures and practices relevant to this Contract are subject to examination by Sourcewell or the Minnesota State Auditor for a minimum of six years from the end of this Contract. This clause extends to Participating Entities as it relates to business conducted by that Participating Entity under this Contract.

B. ASSIGNMENT. Neither party may assign or otherwise transfer its rights or obligations under this Contract without the prior written consent of the other party and a fully executed assignment agreement. Such consent will not be unreasonably withheld. Any prohibited assignment will be invalid.

C. AMENDMENTS. Any amendment to this Contract must be in writing and will not be effective until it has been duly executed by the parties.

D. WAIVER. Failure by either party to take action or assert any right under this Contract will not be deemed a waiver of such right in the event of the continuation or repetition of the circumstances giving rise to such right. Any such waiver must be in writing and signed by the parties.

DocuSign Envelope ID: E368429B-05C4-4DC1-A1DB-D719A6BD39BC

E. CONTRACT COMPLETE. This Contract represents the complete agreement between the parties. No other understanding regarding this Contract, whether written or oral, may be used to bind either party. For any conflict between the attached Proposal and the terms set out in Articles 1-22 of this Contract, the terms of Articles 1-22 will govern.

F. RELATIONSHIP OF THE PARTIES. The relationship of the parties is one of independent contractors, each free to exercise judgment and discretion with regard to the conduct of their respective businesses. This Contract does not create a partnership, joint venture, or any other relationship such as master-servant, or principal-agent.

11. INDEMNITY AND HOLD HARMLESS

Supplier must indemnify, defend, save, and hold Sourcewell and its Participating Entities, including their agents and employees, harmless from any claims or causes of action, including attorneys' fees incurred by Sourcewell or its Participating Entities, arising out of any act or omission in the performance of this Contract by the Supplier or its agents or employees; this indemnification includes injury or death to person(s) or property alleged to have been caused by some defect in the Equipment, Products, or Services under this Contract to the extent the Equipment, Product, or Service has been used according to its specifications. Sourcewell's responsibility will be governed by the State of Minnesota's Tort Liability Act (Minnesota Statutes Chapter 466) and other applicable law.

12. GOVERNMENT DATA PRACTICES

Supplier and Sourcewell must comply with the Minnesota Government Data Practices Act, Minnesota Statutes Chapter 13, as it applies to all data provided by or provided to Sourcewell under this Contract and as it applies to all data created, collected, received, maintained, or disseminated by the Supplier under this Contract.

13. INTELLECTUAL PROPERTY, PUBLICITY, MARKETING, AND ENDORSEMENT

A. INTELLECTUAL PROPERTY

1. *Grant of License.* During the term of this Contract:
   a. Sourcewell grants to Supplier a royalty-free, worldwide, non-exclusive right and license to use the trademark(s) provided to Supplier by Sourcewell in advertising and promotional materials for the purpose of marketing Sourcewell's relationship with Supplier.
   b. Supplier grants to Sourcewell a royalty-free, worldwide, non-exclusive right and license to use Supplier's trademarks in advertising and promotional materials for the purpose of marketing Supplier's relationship with Sourcewell.
2. *Limited Right of Sublicense*. The right and license granted herein includes a limited right of each party to grant sublicenses to their respective subsidiaries, distributors, dealers, resellers, marketing representatives, and agents (collectively "Permitted Sublicensees") in

DocuSign Envelope ID: E368429B-05C4-4DC1-A1DB-D719A6BD39BC

advertising and promotional materials for the purpose of marketing the Parties' relationship to Participating Entities. Any sublicense granted will be subject to the terms and conditions of this Article. Each party will be responsible for any breach of this Article by any of their respective sublicensees.

3. *Use; Quality Control.*

a. Neither party may alter the other party's trademarks from the form provided and must comply with removal requests as to specific uses of its trademarks or logos.

b. Each party agrees to use, and to cause its Permitted Sublicensees to use, the other party's trademarks only in good faith and in a dignified manner consistent with such party's use of the trademarks. Upon written notice to the breaching party, the breaching party has 30 days of the date of the written notice to cure the breach or the license will be terminated.

4. *Termination*. Upon the termination of this Contract for any reason, each party, including Permitted Sublicensees, will have 30 days to remove all Trademarks from signage, websites, and the like bearing the other party's name or logo (excepting Sourcewell's pre-printed catalog of suppliers which may be used until the next printing). Supplier must return all marketing and promotional materials, including signage, provided by Sourcewell, or dispose of it according to Sourcewell's written directions.

B. PUBLICITY. Any publicity regarding the subject matter of this Contract must not be released without prior written approval from the Authorized Representatives. Publicity includes notices, informational pamphlets, press releases, research, reports, signs, and similar public notices prepared by or for the Supplier individually or jointly with others, or any subcontractors, with respect to the program, publications, or services provided resulting from this Contract.

C. MARKETING. Any direct advertising, marketing, or offers with Participating Entities must be approved by Sourcewell. Send all approval requests to the Sourcewell Supplier Development Administrator assigned to this Contract.

D. ENDORSEMENT. The Supplier must not claim that Sourcewell endorses its Equipment, Products, or Services.

14. GOVERNING LAW, JURISDICTION, AND VENUE

The substantive and procedural laws of the State of Minnesota will govern this Contract. Venue for all legal proceedings arising out of this Contract, or its breach, must be in the appropriate state court in Todd County, Minnesota or federal court in Fergus Falls, Minnesota.

DocuSign Envelope ID: E368429B-05C4-4DC1-A1DB-D719A6BD39BC

15. FORCE MAJEURE

Neither party to this Contract will be held responsible for delay or default caused by acts of God or other conditions that are beyond that party's reasonable control. A party defaulting under this provision must provide the other party prompt written notice of the default.

16. SEVERABILITY

If any provision of this Contract is found by a court of competent jurisdiction to be illegal, unenforceable, or void then both parties will be relieved from all obligations arising from that provision. If the remainder of this Contract is capable of being performed, it will not be affected by such determination or finding and must be fully performed.

17. PERFORMANCE, DEFAULT, AND REMEDIES

A. PERFORMANCE. During the term of this Contract, the parties will monitor performance and address unresolved contract issues as follows:

1. *Notification.* The parties must promptly notify each other of any known dispute and work in good faith to resolve such dispute within a reasonable period of time. If necessary, Sourcewell and the Supplier will jointly develop a short briefing document that describes the issue(s), relevant impact, and positions of both parties.
2. *Escalation.* If parties are unable to resolve the issue in a timely manner, as specified above, either Sourcewell or Supplier may escalate the resolution of the issue to a higher level of management. The Supplier will have 30 calendar days to cure an outstanding issue.
3. *Performance while Dispute is Pending*. Notwithstanding the existence of a dispute, the Supplier must continue without delay to carry out all of its responsibilities under the Contract that are not affected by the dispute. If the Supplier fails to continue without delay to perform its responsibilities under the Contract, in the accomplishment of all undisputed work, the Supplier will bear any additional costs incurred by Sourcewell and/or its Participating Entities as a result of such failure to proceed.

B. DEFAULT AND REMEDIES. Either of the following constitutes cause to declare this Contract, or any Participating Entity order under this Contract, in default:

1. Nonperformance of contractual requirements, or
2. A material breach of any term or condition of this Contract.

The party claiming default must provide written notice of the default, with 30 calendar days to cure the default. Time allowed for cure will not diminish or eliminate any liability for liquidated or other damages. If the default remains after the opportunity for cure, the non-defaulting party may:

DocuSign Envelope ID: E368429B-05C4-4DC1-A1DB-D719A6BD39BC

- Exercise any remedy provided by law or equity, or
- Terminate the Contract or any portion thereof, including any orders issued against the Contract.

18. INSURANCE

A. REQUIREMENTS. At its own expense, Supplier must maintain insurance policy(ies) in effect at all times during the performance of this Contract with insurance company(ies) licensed or authorized to do business in the State of Minnesota having an "AM BEST" rating of A- or better, with coverage and limits of insurance not less than the following:

1. *Workers' Compensation and Employer's Liability.*
Workers' Compensation: As required by any applicable law or regulation.
Employer's Liability Insurance: must be provided in amounts not less than listed below:
Minimum limits:
$500,000 each accident for bodily injury by accident
$500,000 policy limit for bodily injury by disease
$500,000 each employee for bodily injury by disease

2. *Commercial General Liability Insurance.* Supplier will maintain insurance covering its operations, with coverage on an occurrence basis, and must be subject to terms no less broad than the Insurance Services Office ("ISO") Commercial General Liability Form CG0001 (2001 or newer edition), or equivalent. At a minimum, coverage must include liability arising from premises, operations, bodily injury and property damage, independent contractors, products-completed operations including construction defect, contractual liability, blanket contractual liability, and personal injury and advertising injury. All required limits, terms and conditions of coverage must be maintained during the term of this Contract.
Minimum Limits:
$1,000,000 each occurrence Bodily Injury and Property Damage
$1,000,000 Personal and Advertising Injury
$2,000,000 aggregate for products liability-completed operations
$2,000,000 general aggregate

3. *Commercial Automobile Liability Insurance.* During the term of this Contract, Supplier will maintain insurance covering all owned, hired, and non-owned automobiles in limits of liability not less than indicated below. The coverage must be subject to terms no less broad than ISO Business Auto Coverage Form CA 0001 (2010 edition or newer), or equivalent.
Minimum Limits:
$1,000,000 each accident, combined single limit

DocuSign Envelope ID: E368429B-05C4-4DC1-A1DB-D719A6BD39BC

4. *Umbrella Insurance*. During the term of this Contract, Supplier will maintain umbrella coverage over Employer's Liability, Commercial General Liability, and Commercial Automobile.

Minimum Limits:
$2,000,000

5. *Network Security and Privacy Liability Insurance*. During the term of this Contract, Supplier will maintain coverage for network security and privacy liability. The coverage may be endorsed on another form of liability coverage or written on a standalone policy. The insurance must cover claims which may arise from failure of Supplier's security resulting in, but not limited to, computer attacks, unauthorized access, disclosure of not public data – including but not limited to, confidential or private information, transmission of a computer virus, or denial of service.

Minimum limits:
$2,000,000 per occurrence
$2,000,000 annual aggregate

Failure of Supplier to maintain the required insurance will constitute a material breach entitling Sourcewell to immediately terminate this Contract for default.

B. CERTIFICATES OF INSURANCE. Prior to commencing under this Contract, Supplier must furnish to Sourcewell a certificate of insurance, as evidence of the insurance required under this Contract. Prior to expiration of the policy(ies), renewal certificates must be mailed to Sourcewell, 202 12th Street Northeast, P.O. Box 219, Staples, MN 56479 or sent to the Sourcewell Supplier Development Administrator assigned to this Contract. The certificates must be signed by a person authorized by the insurer(s) to bind coverage on their behalf.

Failure to request certificates of insurance by Sourcewell, or failure of Supplier to provide certificates of insurance, in no way limits or relieves Supplier of its duties and responsibilities in this Contract.

C. ADDITIONAL INSURED ENDORSEMENT AND PRIMARY AND NON-CONTRIBUTORY INSURANCE CLAUSE. Supplier agrees to list Sourcewell and its Participating Entities, including their officers, agents, and employees, as an additional insured under the Supplier's commercial general liability insurance policy with respect to liability arising out of activities, "operations," or "work" performed by or on behalf of Supplier, and products and completed operations of Supplier. The policy provision(s) or endorsement(s) must further provide that coverage is primary and not excess over or contributory with any other valid, applicable, and collectible insurance or self-insurance in force for the additional insureds.

D. WAIVER OF SUBROGATION. Supplier waives and must require (by endorsement or otherwise) all its insurers to waive subrogation rights against Sourcewell and other additional insureds for losses paid under the insurance policies required by this Contract or other

DocuSign Envelope ID: E368429B-05C4-4DC1-A1DB-D719A6BD39BC

insurance applicable to the Supplier or its subcontractors. The waiver must apply to all deductibles and/or self-insured retentions applicable to the required or any other insurance maintained by the Supplier or its subcontractors. Where permitted by law, Supplier must require similar written express waivers of subrogation and insurance clauses from each of its subcontractors.

E. UMBRELLA/EXCESS LIABILITY/SELF-INSURED RETENTION. The limits required by this Contract can be met by either providing a primary policy or in combination with umbrella/excess liability policy(ies), or self-insured retention.

19. COMPLIANCE

A. LAWS AND REGULATIONS. All Equipment, Products, or Services provided under this Contract must comply fully with applicable federal laws and regulations, and with the laws in the states and provinces in which the Equipment, Products, or Services are sold.

B. LICENSES. Supplier must maintain a valid and current status on all required federal, state/provincial, and local licenses, bonds, and permits required for the operation of the business that the Supplier conducts with Sourcewell and Participating Entities.

20. BANKRUPTCY, DEBARMENT, OR SUSPENSION CERTIFICATION

Supplier certifies and warrants that it is not in bankruptcy or that it has previously disclosed in writing certain information to Sourcewell related to bankruptcy actions. If at any time during this Contract Supplier declares bankruptcy, Supplier must immediately notify Sourcewell in writing.

Supplier certifies and warrants that neither it nor its principals are presently debarred, suspended, proposed for debarment, declared ineligible, or voluntarily excluded from programs operated by the State of Minnesota; the United States federal government or the Canadian government, as applicable; or any Participating Entity. Supplier certifies and warrants that neither it nor its principals have been convicted of a criminal offense related to the subject matter of this Contract. Supplier further warrants that it will provide immediate written notice to Sourcewell if this certification changes at any time.

21. PROVISIONS FOR NON-UNITED STATES FEDERAL ENTITY PROCUREMENTS UNDER UNITED STATES FEDERAL AWARDS OR OTHER AWARDS

Participating Entities that use United States federal grant or FEMA funds to purchase goods or services from this Contract may be subject to additional requirements including the procurement standards of the Uniform Administrative Requirements, Cost Principles and Audit Requirements for Federal Awards, 2 C.F.R. § 200. Participating Entities may have additional requirements based on specific funding source terms or conditions. Within this Article, all

DocuSign Envelope ID: E368429B-05C4-4DC1-A1DB-D719A6BD39BC

references to “federal” should be interpreted to mean the United States federal government. The following list only applies when a Participating Entity accesses Supplier’s Equipment, Products, or Services with United States federal funds.

A. EQUAL EMPLOYMENT OPPORTUNITY. Except as otherwise provided under 41 C.F.R. § 60, all contracts that meet the definition of “federally assisted construction contract” in 41 C.F.R. § 60-1.3 must include the equal opportunity clause provided under 41 C.F.R. §60-1.4(b), in accordance with Executive Order 11246, “Equal Employment Opportunity” (30 FR 12319, 12935, 3 C.F.R. §, 1964-1965 Comp., p. 339), as amended by Executive Order 11375, “Amending Executive Order 11246 Relating to Equal Employment Opportunity,” and implementing regulations at 41 C.F.R. § 60, “Office of Federal Contract Compliance Programs, Equal Employment Opportunity, Department of Labor.” The equal opportunity clause is incorporated herein by reference.

B. DAVIS-BACON ACT, AS AMENDED (40 U.S.C. § 3141-3148). When required by federal program legislation, all prime construction contracts in excess of $2,000 awarded by non-federal entities must include a provision for compliance with the Davis-Bacon Act (40 U.S.C. § 3141-3144, and 3146-3148) as supplemented by Department of Labor regulations (29 C.F.R. § 5, “Labor Standards Provisions Applicable to Contracts Covering Federally Financed and Assisted Construction”). In accordance with the statute, contractors must be required to pay wages to laborers and mechanics at a rate not less than the prevailing wages specified in a wage determination made by the Secretary of Labor. In addition, contractors must be required to pay wages not less than once a week. The non-federal entity must place a copy of the current prevailing wage determination issued by the Department of Labor in each solicitation. The decision to award a contract or subcontract must be conditioned upon the acceptance of the wage determination. The non-federal entity must report all suspected or reported violations to the federal awarding agency. The contracts must also include a provision for compliance with the Copeland “Anti-Kickback” Act (40 U.S.C. § 3145), as supplemented by Department of Labor regulations (29 C.F.R. § 3, “Contractors and Subcontractors on Public Building or Public Work Financed in Whole or in Part by Loans or Grants from the United States”). The Act provides that each contractor or subrecipient must be prohibited from inducing, by any means, any person employed in the construction, completion, or repair of public work, to give up any part of the compensation to which he or she is otherwise entitled. The non-federal entity must report all suspected or reported violations to the federal awarding agency. Supplier must be in compliance with all applicable Davis-Bacon Act provisions.

C. CONTRACT WORK HOURS AND SAFETY STANDARDS ACT (40 U.S.C. § 3701-3708). Where applicable, all contracts awarded by the non-federal entity in excess of $100,000 that involve the employment of mechanics or laborers must include a provision for compliance with 40 U.S.C. §§ 3702 and 3704, as supplemented by Department of Labor regulations (29 C.F.R. § 5). Under 40 U.S.C. § 3702 of the Act, each contractor must be required to compute the wages of every mechanic and laborer on the basis of a standard work week of 40 hours. Work in excess of the standard work week is permissible provided that the worker is compensated at a rate of

DocuSign Envelope ID: E368429B-05C4-4DC1-A1DB-D719A6BD39BC

not less than one and a half times the basic rate of pay for all hours worked in excess of 40 hours in the work week. The requirements of 40 U.S.C. § 3704 are applicable to construction work and provide that no laborer or mechanic must be required to work in surroundings or under working conditions which are unsanitary, hazardous or dangerous. These requirements do not apply to the purchases of supplies or materials or articles ordinarily available on the open market, or contracts for transportation or transmission of intelligence. This provision is hereby incorporated by reference into this Contract. Supplier certifies that during the term of an award for all contracts by Sourcewell resulting from this procurement process, Supplier must comply with applicable requirements as referenced above.

D. RIGHTS TO INVENTIONS MADE UNDER A CONTRACT OR AGREEMENT. If the federal award meets the definition of "funding agreement" under 37 C.F.R. § 401.2(a) and the recipient or subrecipient wishes to enter into a contract with a small business firm or nonprofit organization regarding the substitution of parties, assignment or performance of experimental, developmental, or research work under that "funding agreement," the recipient or subrecipient must comply with the requirements of 37 C.F.R. § 401, "Rights to Inventions Made by Nonprofit Organizations and Small Business Firms Under Government Grants, Contracts and Cooperative Agreements," and any implementing regulations issued by the awarding agency. Supplier certifies that during the term of an award for all contracts by Sourcewell resulting from this procurement process, Supplier must comply with applicable requirements as referenced above.

E. CLEAN AIR ACT (42 U.S.C. § 7401-7671Q.) AND THE FEDERAL WATER POLLUTION CONTROL ACT (33 U.S.C. § 1251-1387). Contracts and subgrants of amounts in excess of $150,000 require the non-federal award to agree to comply with all applicable standards, orders or regulations issued pursuant to the Clean Air Act (42 U.S.C. § 7401- 7671q) and the Federal Water Pollution Control Act as amended (33 U.S.C. § 1251- 1387). Violations must be reported to the Federal awarding agency and the Regional Office of the Environmental Protection Agency (EPA). Supplier certifies that during the term of this Contract will comply with applicable requirements as referenced above.

F. DEBARMENT AND SUSPENSION (EXECUTIVE ORDERS 12549 AND 12689). A contract award (see 2 C.F.R. § 180.220) must not be made to parties listed on the government wide exclusions in the System for Award Management (SAM), in accordance with the OMB guidelines at 2 C.F.R. §180 that implement Executive Orders 12549 (3 C.F.R. § 1986 Comp., p. 189) and 12689 (3 C.F.R. § 1989 Comp., p. 235), "Debarment and Suspension." SAM Exclusions contains the names of parties debarred, suspended, or otherwise excluded by agencies, as well as parties declared ineligible under statutory or regulatory authority other than Executive Order 12549. Supplier certifies that neither it nor its principals are presently debarred, suspended, proposed for debarment, declared ineligible, or voluntarily excluded from participation by any federal department or agency.

G. BYRD ANTI-LOBBYING AMENDMENT, AS AMENDED (31 U.S.C. § 1352). Suppliers must file any required certifications. Suppliers must not have used federal appropriated funds to pay any

DocuSign Envelope ID: E368429B-05C4-4DC1-A1DB-D719A6BD39BC

person or organization for influencing or attempting to influence an officer or employee of any agency, a member of Congress, officer or employee of Congress, or an employee of a member of Congress in connection with obtaining any federal contract, grant, or any other award covered by 31 U.S.C. § 1352. Suppliers must disclose any lobbying with non-federal funds that takes place in connection with obtaining any federal award. Such disclosures are forwarded from tier to tier up to the non-federal award. Suppliers must file all certifications and disclosures required by, and otherwise comply with, the Byrd Anti-Lobbying Amendment (31 U.S.C. § 1352).

H. RECORD RETENTION REQUIREMENTS. To the extent applicable, Supplier must comply with the record retention requirements detailed in 2 C.F.R. § 200.333. The Supplier further certifies that it will retain all records as required by 2 C.F.R. § 200.333 for a period of 3 years after grantees or subgrantees submit final expenditure reports or quarterly or annual financial reports, as applicable, and all other pending matters are closed.

I. ENERGY POLICY AND CONSERVATION ACT COMPLIANCE. To the extent applicable, Supplier must comply with the mandatory standards and policies relating to energy efficiency which are contained in the state energy conservation plan issued in compliance with the Energy Policy and Conservation Act.

J. BUY AMERICAN PROVISIONS COMPLIANCE. To the extent applicable, Supplier must comply with all applicable provisions of the Buy American Act. Purchases made in accordance with the Buy American Act must follow the applicable procurement rules calling for free and open competition.

K. ACCESS TO RECORDS (2 C.F.R. § 200.336). Supplier agrees that duly authorized representatives of a federal agency must have access to any books, documents, papers and records of Supplier that are directly pertinent to Supplier's discharge of its obligations under this Contract for the purpose of making audits, examinations, excerpts, and transcriptions. The right also includes timely and reasonable access to Supplier's personnel for the purpose of interview and discussion relating to such documents.

L. PROCUREMENT OF RECOVERED MATERIALS (2 C.F.R. § 200.322). A non-federal entity that is a state agency or agency of a political subdivision of a state and its contractors must comply with Section 6002 of the Solid Waste Disposal Act, as amended by the Resource Conservation and Recovery Act. The requirements of Section 6002 include procuring only items designated in guidelines of the Environmental Protection Agency (EPA) at 40 C.F.R. § 247 that contain the highest percentage of recovered materials practicable, consistent with maintaining a satisfactory level of competition, where the purchase price of the item exceeds $10,000 or the value of the quantity acquired during the preceding fiscal year exceeded $10,000; procuring solid waste management services in a manner that maximizes energy and resource recovery; and establishing an affirmative procurement program for procurement of recovered materials identified in the EPA guidelines.

DocuSign Envelope ID: E368429B-05C4-4DC1-A1DB-D719A6BD39BC

M. FEDERAL SEAL(S), LOGOS, AND FLAGS. The Supplier cannot use the seal(s), logos, crests, or reproductions of flags or likenesses of Federal agency officials without specific pre-approval.

N. NO OBLIGATION BY FEDERAL GOVERNMENT. The U.S. federal government is not a party to this Contract or any purchase by a Participating Entity and is not subject to any obligations or liabilities to the Participating Entity, Supplier, or any other party pertaining to any matter resulting from the Contract or any purchase by an authorized user.

O. PROGRAM FRAUD AND FALSE OR FRAUDULENT STATEMENTS OR RELATED ACTS. The Contractor acknowledges that 31 U.S.C. 38 (Administrative Remedies for False Claims and Statements) applies to the Supplier's actions pertaining to this Contract or any purchase by a Participating Entity.

P. FEDERAL DEBT. The Supplier certifies that it is non-delinquent in its repayment of any federal debt. Examples of relevant debt include delinquent payroll and other taxes, audit disallowance, and benefit overpayments.

Q. CONFLICTS OF INTEREST. The Supplier must notify the U.S. Office of General Services, Sourcewell, and Participating Entity as soon as possible if this Contract or any aspect related to the anticipated work under this Contract raises an actual or potential conflict of interest (as described in 2 C.F.R. Part 200). The Supplier must explain the actual or potential conflict in writing in sufficient detail so that the U.S. Office of General Services, Sourcewell, and Participating Entity are able to assess the actual or potential conflict; and provide any additional information as necessary or requested.

R. U.S. EXECUTIVE ORDER 13224. The Supplier, and its subcontractors, must comply with U.S. Executive Order 13224 and U.S. Laws that prohibit transactions with and provision of resources and support to individuals and organizations associated with terrorism.

S. PROHIBITION ON CERTAIN TELECOMMUNICATIONS AND VIDEO SURVEILLANCE SERVICES OR EQUIPMENT. To the extent applicable, Supplier certifies that during the term of this Contract it will comply with applicable requirements of 2 C.F.R. § 200.216.

T. DOMESTIC PREFERENCES FOR PROCUREMENTS. To the extent applicable, Supplier certifies that during the term of this Contract will comply with applicable requirements of 2 C.F.R. § 200.322.

22. CANCELLATION

Sourcewell or Supplier may cancel this Contract at any time, with or without cause, upon 60 days' written notice to the other party. However, Sourcewell may cancel this Contract immediately upon discovery of a material defect in any certification made in Supplier's

DocuSign Envelope ID: E368429B-05C4-4DC1-A1DB-D719A6BD39BC

Proposal. Cancellation of this Contract does not relieve either party of financial, product, or service obligations incurred or accrued prior to cancellation.

Sourcewell	Safeware, Inc.
By: DocuSigned by: Jeremy Schwartz C0FD2A139D06489...	By: DocuSigned by: Mary Pelfrey 68D86B93C9504E6...
Jeremy Schwartz	Mary Pelfrey
Title: Chief Procurement Officer	Title: Vice President, Government Contracts and HR
Date: 10/11/2022 | 11:24 AM CDT	Date: 10/11/2022 | 11:49 AM CDT

Approved:

By: DocuSigned by: Chad Coauette 7E42B8F817A64CC...

Chad Coauette

Title: Executive Director/CEO

Date: 10/14/2022 | 10:44 AM CDT

RFP 080922 - Public Safety and Emergency Management Equipment, Tool, and Supply Catalog Solutions

Vendor Details

Company Name:	Safeware, Inc.
Address:	4403 Forbes Blvd Lanham, Maryland 20706
Contact:	Mary Pelfrey
Email:	mpelfrey@safewareinc.com
Phone:	301-683-1212 1815
HST#:	52-1152883

Submission Details

Created On:	Wednesday June 22, 2022 08:53:30
Submitted On:	Tuesday August 09, 2022 08:34:09
Submitted By:	Mary Pelfrey
Email:	mpelfrey@safewareinc.com
Transaction #:	9736f2aa-38df-4b8b-9504-49ef7367f7e9
Submitter's IP Address:	70.237.73.210

Specifications

Table 1: Proposer Identity & Authorized Representatives

General Instructions (applies to all Tables) Sourcewell prefers a brief but thorough response to each question. Do not merely attach additional documents to your response without also providing a substantive response. Do not leave answers blank; respond "N/A" if the question does not apply to you (preferably with an explanation).

Line Item	Question	Response *	
1	Proposer Legal Name (one legal entity only): (In the event of award, will execute the resulting contract as "Supplier")	Safeware, Inc.	*
2	Identify all subsidiary entities of the Proposer whose equipment, products, or services are included in the Proposal.	Not Applicable	*
3	Identify all applicable assumed names or DBA names of the Proposer or Proposer's subsidiaries in Line 1 or Line 2 above.	Not Applicable	*
4	Provide your CAGE code or Unique Entity Identifier (SAM):	CAGE Code: 1DCA7, UEI: JRVNJLXMZN64	*
5	Proposer Physical Address:	4403 Forbes Blvd. Lanham, MD 20706	*
6	Proposer website address (or addresses):	www.safewareinc.com	*
7	Proposer's Authorized Representative (name, title, address, email address & phone) (The representative must have authority to sign the "Proposer's Assurance of Compliance" on behalf of the Proposer and, in the event of award, will be expected to execute the resulting contract):	Jessica Faulkner Assistant Secretary Senior Manager, Contract Administration & Quality 4403 Forbes Blvd. Lanham, MD 20706 jfaulkner@safewareinc.com 800-331-6707 x1079 (office)	*
8	Proposer's primary contact for this proposal (name, title, address, email address & phone):	Mary Pelfrey Executive Director 4403 Forbes Blvd. Lanham, MD 20706 mpelfrey@safewareinc.com 704-564-0320 (cell) 301-683-1212 x1815 (office)	*
9	Proposer's other contacts for this proposal, if any (name, title, address, email address & phone):	Karla Hyatt Director of Government Contracts 1800 Byberry Road Ste 801 Huntingdon Valley, PA 19006 kahyatt@safewareinc.com 800-331-6707 x1090 (office) Rick Bond Vice President of Sales 4403 Forbes Blvd. Lanham, MD 20706 rbond@safewareinc.com 301-542-3258 (cell)	

Table 2: Company Information and Financial Strength

Line Item	Question	Response *	

10	Provide a brief history of your company, including your company's core values, business philosophy, and industry longevity related to the requested equipment, products or services.	Safeware, founded in 1979, has spent over forty years protecting workers in their place of business. Beginning as an industrial safety company, we shifted our focus in the nineties to governmental agencies and are proud to have been among the earliest companies to support our nation's infrastructure in the fledgling homeland security market. We helped responders at both Ground Zero in New York and at the Pentagon during the aftermath of the 9/11 emergencies. In 1981, we established our Technical Services division to provide quality service for those more technical products that require regular care and maintenance. Today we are trusted by key government agencies and Fortune 500 companies to keep their critical equipment operating, and their personnel protected. In 1999, responding to customers and suppliers' requests, we created the Fire & Rescue Division. Today, Safeware focuses on supplying products and services to fire & rescue, federal and local government, law enforcement, military, and all forms of first responders. We are a trusted partner to those for whom failure is not an option. Safety and service are what we do but, Response is who we are. Safeware has a well-established reputation as the "go-to" Company when customers need us most. We responded to the events of 9/11 with personnel and material arriving on the scene in New York City and at the Pentagon within hours. We are proud of our ability to play such a significant role in supporting our country's first responders. Safeware has also provided material and support for many other crises, including multiple anthrax incidents, oil spills, bombings, natural disasters, and the recent COVID-19 pandemic. No matter the size of an emergency, we work hard to help our customers in their times of need. Government customers make up 90% of our sales, and these are primarily in State and Local markets. Today, we are a nationally recognized industry leader in distributing and servicing Public Safety and Emergency Management Equipment and Solutions.
11	What are your company's expectations in the event of an award?	Safeware expects a single award for the catalog of products listed in this Request for Proposal in the US. We are open to the idea that, should a large industrial supply distributor respond, then that award would not otherwise interfere with our position as a sole awardee on the contract as "big box" distributors have different "go to market" strategies than national public safety distributors. Additionally, we recognize our shortcomings in Canada and hope and anticipate that Sourcewell will support Safeware with training for our team of Sales and Customer Service personnel (over 50 strong nationwide and growing). We suggest this training will take place in the form of a series of webinars. To advertise and promote the contract, we anticipate that Sourcewell will work with Safeware's marketing team to position the contract nationally and to make the Sourcewell logo prominent in our marketing efforts. We also anticipate Sourcewell to identify leads and opportunities for public agencies to utilize the contract and assist the Safeware team with legal objections or questions around accessing the contract. We request that Sourcewell continue promoting the Sourcewell family of contracts, shows and other joint marketing events. Safeware looks forward to a kick-off discussion involving Key Personnel and Executive Management in preparation for the contract launch.
12	Demonstrate your financial strength and stability with meaningful data. This could include such items as financial statements, SEC filings, credit and bond ratings, letters of credit, and detailed reference letters. Upload supporting documents (as applicable) in the document upload section of your response.	Please see the attached Financial Statement demonstrating Safeware's financial stability and excellent cash flow.

13	What is your US market share for the solutions that you are proposing?	We do not have strong and relevant market data to support a claim in terms of market share in the US. We can, however, state that we consistently are one of the top suppliers for the following manufacturers, often number one in the US: • CMC Rescue – Rescue Gear, primarily for firefighters including rescue PPE • Mustang Survival – PPE for Rescue/Water Rescue & Firefighter PPE • Kask – PPE helmets for Rescue Personnel • Cairns – Firefighting Helmets • United Shield – Ballistic Helmets & Body Armor • Kappler – PPE for Firefighters • Dupont Personal Protective – PPE • Blauer Homeland Security – Chembio PPE While we have no third-party data, we believe Safeware is the largest national supplier of equipment for HAZMAT teams, bomb squads and technical reserve teams for State and Local governments across the country. All these teams are critical components to emergency response. Additionally, during the Pandemic in 2020 and 2021, Safeware was the single largest distributor of N95 respirators in 3M's Occupational Safety and Health Division which demonstrates our buying power and national presence in a time of emergency.	*
14	What is your Canadian market share for the solutions that you are proposing?	Safeware does not have a Canadian market share, but has partnered with Levitt-Safety Limited, Canada's premier safety distributor in a mutually beneficial relationship that will grant customers access to quality safety products from Canada's leading and most reputable safety distributor. Boasting annual sales of over $100 million and $15 million in inventory, Levitt-Safety has served Canadian public agencies for well over 80 years and will continue to do so through this contract.	*
15	Has your business ever petitioned for bankruptcy protection? If so, explain in detail.	No.	*
16	How is your organization best described: is it a manufacturer, a distributor/dealer/reseller, or a service provider? Answer whichever question (either a) or b) just below) best applies to your organization. a) If your company is best described as a distributor/dealer/reseller (or similar entity), provide your written authorization to act as a distributor/dealer/reseller for the manufacturer of the products proposed in this RFP. If applicable, is your dealer network independent or company owned? b) If your company is best described as a manufacturer or service provider, describe your relationship with your sales and service force and with your dealer network in delivering the products and services proposed in this RFP. Are these individuals your employees, or the employees of a third party?	a. Safeware is a distributor. Our contracts team maintains signed agreements with each manufacturer, including every manufacturer listed in this response. Given the broad nature of our response, we are happy to provide a letter from any manufacturer proposed in this RFP stating that we are a distributor of their products should it be requested.	*
17	If applicable, provide a detailed explanation outlining the licenses and certifications that are both required to be held, and actually held, by your organization (including third parties and subcontractors that you use) in pursuit of the business contemplated by this RFP.	Safeware is registered in Minnesota under the name "Safeware Safety Supplies Inc." Our Department of Revenue account number is #6301318 which is used to file and pay MN sales tax. To our knowledge, we are not required to hold any other licenses in MN.	*
18	Provide all "Suspension or Debarment" information that has applied to your organization during the past ten years.	Safeware has not been suspended or debarred anytime in the last ten years.	*

Table 3: Industry Recognition & Marketplace Success

Line Item	Question	Response *	
19	Describe any relevant industry awards or recognition that your company has received in the past five years	Here are a few recent examples of Safeware recognition by our customers and partners: • 2020 Supplier of the Year by TEMA (Tennessee Emergency Management Agency). • 2021 Outstanding Response in a Time of Emergency by the State of Florida Department of Emergency Management for o Wastewater spill at Piney Point o Surfside Condo collapse • 2020 recognized as a top national producer for another cooperative contract • 2021 recognized as a top producer in Northeast region for another cooperative for all sales in region • Recognized by numerous manufacturers for outstanding sales performance • Recognized by our partners for being awarded State contracts. Often, this is a result of "bridging" an existing cooperative contract. Examples include Michigan, Massachusetts, Tennessee, and Utah.	*
20	What percentage of your sales are to the governmental sector in the past three years	Safeware has consistently tracked 90% of our overall sales to the governmental sector.	*
21	What percentage of your sales are to the education sector in the past three years	Approximately 10% of our governmental sales have been in the Higher Ed and K-12 sectors. This is largely reflective of the bundle of products we offer and the vertical market focus on fire and police in our company. We do believe the education sector is a growing category though for Safeware. This is mainly due to the pandemic, recent events, and the growing emphasis of safety measures in this sector.	*
22	List any state, provincial, or cooperative purchasing contracts that you hold. What is the annual sales volume for each of these contracts over the past three years?	OMNIA 2021 $ 95,523,185 2020 $151,024,876 2019 $ 53,140,772 HIRE 2021 $210,392 2020 $629,953 2019 $609,007 SourceWell 2021 $682,858 2020 $432,967 2019 n/a	*
23	List any GSA contracts or Standing Offers and Supply Arrangements (SOSA) that you hold. What is the annual sales volume for each of these contracts over the past three years?	GSA Multiple Award Schedule Contract #GS-07F-5668P 2021 $921,017 2020 $737,245 2019 $433,246	*

Table 4: References/Testimonials

Line Item 24. Supply reference information from three customers who are eligible to be Sourcewell participating entities.

Entity Name *	Contact Name *	Phone Number *	
New York State DHSES	Jes (Walker) Bearden	518-402-4789	*
City of Minneapolis Minneapolis Fire Department	Jim Thomas	612-673-5563	*
Nashville International Airport	Sgt. Marc Christian	615-275-2322	*
Georgia Department of Transportation	Tim Swink	404-631-1367	

Table 5: Top Five Government or Education Customers

Line Item 25. Provide a list of your top five government, education, or non-profit customers (entity name is optional), including entity type, the state or province the entity is located in, scope of the project(s), size of transaction(s), and dollar volumes from the past three years.

Entity Name	Entity Type *	State / Province *	Scope of Work *	Size of Transactions *	Dollar Volume Past Three Years *	
Commonwealth of Massachusetts	Government	Massachusetts - MA	Homeland Security, PPE, Public Safety, Public Works / Traffic Supplies, Safety Apparel and other products required in emergencies; for example, COVID-19, etc.	Avg.: $27,738	$44,888,273	*
State of Tennessee	Government	Tennessee - TN	Public Safety, PPE, HAZMAT, Drug Detection, etc.	Avg.: $90,884	$29,891,247	*
Miami-Dade County	Government	Florida - FL	PPE, Respirators, Traffic Safety, Fire & Rescue, LE, etc.	Avg.: 3,944	$11,783,621	*
City of Dallas	Government	Texas - TX	Public Safety, PPE, HAZMAT, Drug Detection, etc.	Avg.: $11,895	$9,790,955	*
State of Michigan	Government	Michigan - MI	PPE, Homeland Security, LE, Protection, Water Filtration, etc.	Avg.: $9,667	$9,761,142	*

Table 6: Ability to Sell and Deliver Service

Describe your company's capability to meet the needs of Sourcewell participating entities across the US and Canada, as applicable. Your response should address in detail at least the following areas: locations of your network of sales and service providers, the number of workers (full-time equivalents) involved in each sector, whether these workers are your direct employees (or employees of a third party), and any overlap between the sales and service functions.

Line Item	Question	Response *	
26	Sales force.	The Safeware team works together. It takes the involvement of many people's expertise across multiple disciplines to meet the participating entities' needs. Our teams work together, from sales to customer service, technical service support, purchasing, marketing, and contracts to support the Sourcewell contract. Safeware employs a national team of 25 sales professionals and represents significant geographical growth over the last 5 years through our expansion to the West Coast as well as corresponding operational resources to support this growth. (See attached Safeware Roster and Safeware Territory Map.) Our sales representatives are skilled and have knowledge in all the products and services we provide to support the award resulting from this RFP. The sales representatives are typically the front line to participating entities, understanding their problems, and finding solutions. They have the ultimate responsibility to the customer for public agency satisfaction. Our customer service representatives (CSR) are inside sales representatives responsible for customer calls and emails and for addressing orders and order entry. The CSR assist customers with pricing, inventory, and status updates on products. Safeware's experienced Customer Service staff features account specific service and not a "call center" approach. Our team of 28 CSR's is located in regions across the country to provide service in every time zone, and our customer service representatives have great familiarity with their assigned customers. Customers' requests result in pricing specific to the required or requested contract, and the contract details can be found on the pricing documents. Our customer service representatives are very experienced in working with customer deadlines resulting from the end of the fiscal year, end of the grant cycles requirements, and other customer-specific requirements. They understand the urgency of emergency requests. Each year, we receive numerous compliments about our customer service team. Our Technical Services team provides maintenance, repair, rental, and leasing solutions to public entities. Our trained and certified technicians provide on-site and in-house services to minimize your downtime and keep customers in compliance. Purchasing ensures we are keeping the appropriate products in inventory for your	

needs. This can be in general for public entities or public entity specific. Purchasing also works with sales to ensure one-time purchases at the best possible price to the customer. They also make sure price lists are accurate and auditable.

Marketing supports sales to provide collateral material, an online website, eCommerce, punchout, and many other services to streamline a Sourcewell Member's purchase.

Contracts works with sales to offer a national cooperative agreement to help public entities save time and money to simplify the sales process.

Product Knowledge.

All Safeware sales representatives are trained to provide product support in the key aspects of public safety. Not only does Safeware provide products, but our field representatives provide added value support to our customers. Examples of such added value services that have been provided to State and Local customers in the past include:

- Fentanyl Seminars
- Respiratory Fit Testing and Fit Testing Training
- Confined Space Training
- Product Fitting (Helmets, PPE)
- Site Safety Surveys

Safeware sales representatives receive a minimum of one hour each week of new product training, and an additional 5 days of offsite training annually. The focus of these training sessions is to support the sales of products and services in the following categories:

- Police
- SWAT
- Patrol
- Bomb
- Traffic
- Drug Enforcement
- Crime Scene
- Dive/Recovery
- Search and Rescue
- Canine
- Fire
- Structural Firefighting
- Hazmat Response
- Technical Rescue
- USAR
- Water Rescue
- Apparatus Small Parts
- General Safety
- Emergency Management

Most importantly, all Safeware sales representatives are trained on government purchasing and the benefits of cooperative purchasing. Each sales representative regularly works in support of promoting our cooperative contracts and attends government purchasing events obtaining best practice information to help them consult with government customers regarding the use of cooperative contracts. All Safeware sales representative will have access to the Sourcewell contract program resources and will review all important information so that they can be a resource to government purchasing professionals.

Many companies will show coverage maps with team members who are not engaged in government sales opportunities. Safeware is in the business of offering contract solutions to America's heroes, and each field representative is engaged in support of our mission.

Safeware sales representatives focus on high volume customer contact opportunities in the field. While the pandemic curtailed most trade shows in 2020 and 2021, we continued to support the events that operated virtually and shifted to participating again in person this year as the health crisis moved from pandemic to endemic. Our outside sales representatives will participate in 77 trade shows this year. These trade shows represent contact with tens of thousands of current and potential customers in State and Local government. A glance at our trade show schedule will demonstrate the commitment that every representative in each territory has in both government procurement conferences and end user conferences. Please see attached list of Safeware's trade shows. Most of our sales activities are contract sales and these end user events reflect the same. These trade shows demonstrate the unique versatility and geographical scope of Safeware's sales team. Each of

		these shows is a showcase of the benefits of cooperative purchasing, along with strong subject matter expertise in the core vertical user markets. Regarding our Canadian strategy, we have no current assets in Canada. We have aligned with the premier Canadian distributor of Personal Protective Equipment, Levitt-Safety. Levitt will partner with Safeware under the brand of Safeware Levitt, which is only for our Canadian operations. Levitt will report Canadian sales to Safeware, and Safeware will manage the Sourcewell relationship and all reporting and payment functions. Safeware will provide training for Levitt's sales team, and we will work with Levitt to ensure that contracted items on the Sourcewell agreement are available.	
27	Dealer network or other distribution methods.	Safeware has a long history of added value distribution to realize our customers' goals regarding MWSBE participation. We have current small business partners who are certified Minority Owned, Woman Owned, and Veteran Owned businesses with whom we work regularly to meet customers' MWSBE participation goals. The challenge for MWSBE participation in a national contract is that every municipality has its distinct certification process, and there is a consistent bias towards small local businesses. For example, a certified vendor in Cleveland most likely is not a certified vendor in Los Angeles. Our strategy is to establish regional distribution under the contract. Regional dealers can sell Safeware contract items at the contracted price as authorized and listed dealers on the contract. This would enable large urban customers to meet their participation requirements and still utilize the contract, which has so many benefits in terms of cost and time savings. We believe that the margin we sacrifice is offset by the opportunity in these large target areas. Certified dealers are organically added to the contract as subcontractors. For example, the Commonwealth of Massachusetts has stated goals for diversity spend and we partnered with The Janz Corporation, a service-disabled veteran-owned small business (SDVOSB). In 2020, we had sales over $7 million with Janz for the Commonwealth. Here are some examples of Safeware relationships with certified businesses: • 570 Global, Corp. – SDVOB • Ace Tool Repair, Inc. – Woman Owned • B3 Enterprises – 8a/SDB, 8a/SBS • First Choice Supply – Minority Owned • Ideal Electric – Woman Owned, Minority, Small Business • Snappy Solutions – Woman Owned • The Janz Corporation - SDVOSB The utilization of a diverse supply chain replaces an available discount or other discount offered to an end-user customer in consideration of a business opportunity. Rather than asking for a best and final price offer, the customer instead seeks to satisfy participation while utilizing the cooperative contract. Safeware will take responsibility for compliance and reporting of all contract sales. Moreover, Safeware will be responsible for the prompt payment of any administrative fees associated with the sales. Leasing: In the event a customer leases product, then the leasing company becomes the dealer of the product. Safeware will take responsibility for compliance and reporting of all contract sales and will be responsible for the prompt payment of any administrative fees associated with the sales. Canadian Partner: Safeware is proud to partner with Levitt-Safety to comply with the Canadian Sourcewell customers. Established in 1935, Levitt-Safety Limited is the Canadian Leader in health and life safety products, training, consulting, and technical services. With strategically located branches across Canada, Levitt-Safety is ideally equipped to serve companies of any size or industry who recognize the tremendous value of building a safety-centric culture in their organization. With annual sales of over $100 million and $15 million in inventory, Levitt-Safety Limited provides quality Safety products and services aligned to support customer requirements. They have the capability of servicing all of their customer's sites, as well as providing consistent service and high levels of product availability. Levitt-Safety Limited can match your location footprint, make rapid product deliveries and provide customers service to remote locations throughout Canada with an extensive network that includes:	*

		• 18 branch locations throughout Canada • 2 major distribution centers across Canada (Oakville, Ontario and Edmonton, Alberta) • 1/4 million square feet of warehousing combined In addition to providing customers with extensive safety product coverage, Levitt is proud to offer superior services and business support through customer focused delivery channels, which are reinforced by superior services, processes, and technologies. Levitt-Safety Limited also guarantees to provide customers with after-sales technical support and repair services with the most knowledgeable product and industry specialists in the business and leading-edge technology support for e-Procurement and automated payment solutions.	
28	Service force.	Safeware operates a corporate office in Lanham, Maryland with additional branches in Columbia, Maryland; Philadelphia, Pennsylvania; Richmond, Virginia; Gainesville, Georgia; Miami, Florida; and Denver, Colorado. We employ 28 customer service personnel across these branches and the US to support our ever-growing government sales operations. Our IT and Marketing departments boast 10 personnel, and our Purchasing Department, housed in the Richmond branch, has 5 staff members in charge of purchasing as well as contract and data management. Our branches in Columbia, Richmond, and Denver all host warehouse space from which we ship product, and all branch locations have service technicians assigned to them. Safeware provides many value-added services both in house and with our mobile service vans. Our Technical Service Department employs 17 dedicated personnel who are trained in many areas including, but not limited to, SCBA maintenance and repair, SCBA flow testing, cylinder hydrostatic testing, fit testing, CBRNE instrument calibrations and repair, Level-A suit testing, fire hose testing, PPE cleaning, air compressor repair and maintenance, and breathing air testing. Our Canadian Partner, Levitt-Safety, is proud to offer the largest service offering in Canada provided by highly trained and knowledgeable technicians who come right to your door to ensure that necessary equipment is always in top condition. Their techs are cross trained to inspect, maintain and repair a multitude of product lines, from fire extinguishers and respirators to instruments and fall protection, providing the convenience of relying on just one service provider. All of Levitt's technicians have been thoroughly trained to ensure your equipment is achieving peak performance while meeting all local and national codes and standards. Their techs carry out their services in conformance with standards set out by Underwriter's Laboratory of Canada (ULC), the National Fire Prevention Association (NFPA), manufacturer training, and provincial fire codes. What sets Levitt apart from their Canadian competition is the level of expertise and guidance their Safety Specialists bring to customers in order to help them solve their fire, safety, and environmental challenges. After all – safety is all they do. For more than 80 years, the safety of your organization has been Levitt-Safety's number one concern. Their mission is to make Canada a safer place to live and work. They have always maintained a simple, yet unique approach to the marketplace: bringing customers the best products and services in the industry backed by decades of knowledge and expertise.	*

29	Describe the ordering process. If orders will be handled by distributors, dealers or others, explain the respective roles of the Proposer and others.	Order processing procedures begin most often with a request for a quote submitted either as a request on our website, emailed directly to a customer service representative, or via phone call. Existing customers will typically reach out directly to the customer service representative assigned to their account or their sales rep for larger, more complicated requests. Quotes are entered into our system by a CSR and are typically returned to the customer within 24 hours of the initial request. The customer reviews the quote, communicates any necessary alterations and ensures their requirements are satisfied, replies with a Purchase Order, credit card number, or other authorization to order. The quote is then seamlessly converted to an order within our processing system, Prophet 21. Our staff verifies the details and then executes the order, which either automatically allocates items in our warehouse stock or prompts a subsequent order directly to the manufacturer confirming the necessary ship dates and other requirements. Once the order has been placed, an order acknowledgment is sent to the point of contact that placed the order. During the order entry process, a code will be assigned to the order indicating it as a Sourcewell contract sale. Safeware staff will continually monitor status from the manufacturer to ensure the items meet or exceed delivery requirements. All order activity is monitored and controlled by our computer enterprise system. Any delays will be immediately brought to the attention of the customer. When the product is ready to be shipped, the system prints a pick ticket for the warehouse to pull and package the product. When the product is packaged, tracking information is added, and a packing slip is generated and affixed to the outside of the box. Once the shipment is confirmed, the system generates an invoice. If the product is shipping directly from one of our manufacturers, the same quote, acknowledgment, and order conversion is followed, except the system generates a PO for the product to ship to the customer with the customer ship-to address and PO number. The PO is sent directly to the manufacturer. Once Safeware's Accounts Payable department receives the direct shipment invoice, the product quantity, price, PO and ship to are confirmed. The tracking, if provided by the manufacturer, is added to the order and an invoice is generated. Once generated, invoices are sent to the customer per the PO instructions, Email, Mail, Fax, EDI, or web-based invoicing. Safeware accepts orders via multiple formats such as email, telephone, e-commerce, fax, and mail service. Customer orders can be placed directly on both company websites, and transactions using EDI (850, 855, 856, 865, 810, 997 via ANSI X12) are also a capability. Customers may purchase online directly from our website using a PO or P-card/credit card. We offer punchout where the customer utilizes their eProcurement system to Safeware's punchout site. This is the most common type of punchout. We also provide punchout where the customer can search for and view products directly in their procurement platform without initiating a punchout session. We are currently integrated with Ariba, Equallevel, CommBuys, Jaggaer (formerly SciQuest), and Oracle Business Network. In addition to website and punchout, we offer these additional ecommerce capabilities: • EDI capabilities to our ERP system for receiving PO's and sending order confirmations, ship notifications, and invoices • Custom API's can also be made to our ERP system for this functionality • Ability to transcribe incoming PO's sent via email into EDI • Ability to send order confirmations, ship notifications, and invoices via email
30	Describe in detail the process and procedure of your customer service program, if applicable. Include your response-time capabilities and commitments, as well as any incentives that help your providers meet your stated service goals or promises.	Safeware will ensure that delivery schedules for routine, urgent, and emergency requirements are met. We categorize orders at time of order entry and have established a standard operating procedure that verifies a customer's required timeframe on every order. Safeware has developed world-class expertise in on-time order processing and fulfillment by supplying both Commercial and Government in daily operations and in times of emergency for over 40 years. Safeware is trusted to have reliable systems in place for important customers that depend on our ability to meet supply chain needs. Our state-of-the-art ERP system, EPICOR Prophet 21, is designed for a distributor to efficiently stay on top of every order, fulfilling the requirements based on data captured at order entry, with checks and balances and exception reporting to ensure that no orders fall unattended. Entering a required date is a mandatory step in processing every order. Our inside sales representatives will code orders in the ERP system as urgent or emergency if

special handling or expedited action is necessary. They can also trigger an electronic note that follows the order through the system and will print on order paperwork detailing the urgent or emergency nature of the order. These notes also notify the appropriate warehouse manager and customer contact manager. This process assures us that urgent and emergency orders have visibility within the system and are verified daily as to the ability to be delivered on time.

We cannot eliminate the human element completely, but our historic status as an emergency equipment vendor has enabled us to have very strong checks and balances. Combined with a culture of paying attention to required dates and close monitoring, we ensure that every pick ticket gets shipped every day. We are not error free, but we enjoy 99% shipping accuracy, which puts us very high in the distribution world, and when we do make mistakes, we take steps to make heroic recoveries that compensate the customer and take corrective action to eliminate errors.

Safeware strives to deliver all routine requirement orders for material to the authorized customer's receiving location within the delivery timeframe as specified in the order, (indicated to usually be within 30 days of order placement). Safeware's ERP system uses sophisticated replenishment algorithms to ensure that stock levels are maintained to support historical demand for an item. Safeware consistently maintains approximately $8 million in inventory in order to provide quick delivery on our customers' most requested items. For off-the-shelf items, depending on size and destination, Safeware utilizes common carriers, LTL (less than truckload), and commercial package delivery services like UPS Ground and Federal Express Ground daily. Utilizing major carriers, standard delivery times for stock items are generally 1-5 days from order to receipt.

As soon as an order is entered into the Safeware system, a pick ticket is created instructing the warehouse to pick all items currently in stock. For any items not in stock, the customer service representative reviewing the order for acceptance (as these purchase orders will be placed via EDI), has the option to place a purchase order directly with the manufacturer for drop-ship to the customer's location or expedited delivery to our warehouse, which triggers the drop ship follow-through process whereby the manufacturer is contacted by our expediting team to ensure prompt shipping.

Carrier selection requires a good understanding of time in transit for each carrier and our Warehouse Manager has over 20 years' experience with Safeware ensuring shipments are timely delivered to our customers nationwide. A core element of the Safeware strategy is to complete all of a day's work in a day, meaning that every member of the Safeware team understands that getting orders out accurately and as quickly as possible is our greatest role and our competitive advantage in the supply chain. All orders for in stock items received by 3:00 pm EST will ship the same day. Selecting an overnight or two-day carrier is the critical step for urgent and emergency orders that have 72- and 24-hour delivery requirements. A pick ticket which prints with all orders will reference the time-sensitive nature which alerts the warehouse personnel to select an appropriate carrier that can meet time commitment, whether it be overnight UPS, FedEx, emergency custom critical truck delivery, or, in some circumstances, our own personnel making the emergency delivery. As a large seller of all kinds of response equipment needed for on demand natural disaster response, Safeware has an experienced emergency order team, protocol, and discipline for handling these types of orders.

Below are just a few of the highlights from our years of emergency response experience focused on public agency response:

- 9/11 Attacks, 2001
  - Ground Zero – Safeware had personnel and material arriving on site on the evening of September 11, 2001. We set up logistical points outside of the hot zone and provided emergency products around the clock to fire and police customers. We overcame the minimal existing supply chain and set up a conference call with every major respiratory manufacturer in the US at the Mayor's office in NYC resulting in the supply of truckloads of equipment arriving daily to meet critical needs.
  - Pentagon – We provided the lead agency, Arlington County, with emergency equipment and set up a support team for the response. We worked closely with the Fairfax County USAR Team, and were the only supplier authorized to ship product into the hot zone.
  - We learned much about emergency procurement and the constraints of government purchasers in an emergency. We have used this experience to help direct and advise other agencies in all other emergency situations since.

- Anthrax/Ricin Contamination Attacks, Washington, DC, 2001
  - While most of our business was Federal, we worked nights and weekends to provide emergency products to local responders inundated with white powder calls.

- Hurricane Katrina, 2005
  - Before the storm was nationwide news, Safeware received a call from Becky McKinney at Fairfax County alerting us to the severity of the disaster. We set up a logistical point in Columbus, MS where we were able to deliver truckloads of critical supplies such as hip waders, bottled water, propane, portable toilets and service, personal hygiene kits, flashlights, MREs, body bags, and even diapers and baby food which the Federal government could not provide.
  - We were a key supplier to FEMA and MEMA during the days following the devastation in Mississippi and Louisiana, where we continued to earn a national reputation as a premier emergency response distributor.

- Hurricane Sandy, 2012
  - Many areas drew from existing caches of equipment and used Safeware to replenish their stock. The supply chain was largely in place and we assisted with less emergency purchases and more contract and credit card buys. We received a requirement from FDNY for 55 complete sets of water rescue gear which was fulfilled and delivered in it's entirely to the emergency logistics center in Queens within 24-hours.

- State of Michigan Flooding, August 2014
  - State employees from State Emergency Operations Center were tasked with flood cleanup operations. Safeware was contacted after hours on a Saturday with an equipment list needed for clean-up. We sourced emergency shipments of the required kits and dispatched a truck to Michigan by Sunday morning. All purchases were made on the state contract. Local counties then used the same contract to purchase the same emergency equipment for their continued clean-up efforts.

- Ebola Crisis, 2015
  - Sent emergency supplies of PPE to customers all over the country, often next day air. Competitors had no inventory of DuPont suits, but due to our high annual volume of sales, we were able to source and supply our customers.

- Zika Virus, 2016
  - Miami Dade County procured emergency supplies such as insect repellent, wipes and sprays to protect employees and the public.

- Hurricane Season, 2017
  - Emergency supplies from all sorts of manufacturers were being reserved for Federal Response. Utilizing our widespread supply chain, we were able to source items for local responders, and coordinate shipping to hard to access areas.

- Corona Virus, 2020
  - Many customers, including the top public procurement officials from many States, Counties, and Cities nationally, contacted Safeware evenings and weekends, as well as after hours. The February 2020 edition of Supply Chain World outlines the efforts of Safeware, among other suppliers, in meeting the continual and after-hours needs of one customer, Anne Arundel County, MD. After hours calls at Safeware are not just a courtesy; we work with our customers to achieve immediate results in a time of crisis. Our warehouse shipped thermometers, gloves, and respirators to customers across the United States, working nights and weekends as the workload and urgency demanded.

- Civil Unrest, 2020
  - Just as the demand for pandemic supplies was over the initial peak, Safeware began receiving calls from law enforcement customers across the country. There was a massive demand for personal protective gear for the police, who were protecting the public during these times of social conflict. Besides providing respirators, helmets, and suits, Safeware was instrumental in sourcing safety eyewear with infrared protection. Officers were being assaulted with lasers in their eyes during the protests. On the weekend of May 30, 2020, Safeware worked throughout the weekend, supporting our customers. Truckloads of protective gear were picked up and delivered to Safeware customers.

- Surfside Condominium Collapse, 2021
  - Air quality for rescue workers was potentially unsafe in the collapse. We were contacted by our customers who could not get gas detection equipment to work. Safeware dispatched a sales representative and our manufacturer partner who brought parts and completed the necessary repairs free of charge.

31	Describe your ability and willingness to provide your products and services to Sourcewell participating entities in the United States.	Safeware believes it is the largest single potential respondent in the US focused solely on the scope of work described in the RFP. There may be respondents larger in size. However, our market space is this vertical market, and we track over 90% of sales in the described vertical markets. It makes us unique amongst respondents. Our intention is to continue to grow in this space and our desire is to help Sourcewell grow as well. The current limitation is the narrow scope of work on the existing contract with Sourcewell. A single or dual award will result in larger opportunities for both Sourcewell and Safeware.	*
32	Describe your ability and willingness to provide your products and services to Sourcewell participating entities in Canada.	Levitt-Safety will be the supplier of all products and services proposed on this contract for Sourcewell members in Canada.	*
33	Identify any geographic areas of the United States or Canada that you will NOT be fully serving through the proposed contract.	Safeware has coverage across the United States. Our Canadian partner, Levitt-Safety, will handle Canada, allowing us to fully serve the entire coverage area.	*
34	Identify any Sourcewell participating entity sectors (i.e., government, education, not-for-profit) that you will NOT be fully serving through the proposed contract. Explain in detail. For example, does your company have only a regional presence, or do other cooperative purchasing contracts limit your ability to promote another contract?	We propose no exclusions to participating entity sectors in the contract. As a practical matter, some verticals offer less but are a growing opportunity for a public safety and emergency management market, such as education. We have sales activity in every listed sector and will continue to pursue all contract sales.	*
35	Define any specific contract requirements or restrictions that would apply to our participating entities in Hawaii and Alaska and in US Territories.	We will honor contract pricing and support customers in Alaska and Hawaii as specified in this contract. Some manufacturer agreements limit distribution to the continental US, and in those cases, we would comply with the agreements.	*

Table 7: Marketing Plan

Line Item	Question	Response *	
36	Describe your marketing strategy for promoting this contract opportunity. Upload representative samples of your marketing materials (if applicable) in the document upload section of your response.	Safeware plans an aggressive marketing strategy to launch this agreement. We have tremendous cooperative contract acceptance among our customers in many states. We will immediately launch the contract with a nationwide campaign and expect immediate results. Once awarded, we will prominently feature Sourcewell and the contract on our website. Social media is also a big part of the change we see in industry today. Our Social Media Director will use many tools to promote the contract including posting contract information on multiple platforms as well as sending email blasts with more detailed contract use information. We have a large database of contacts in areas that will immediately benefit from this contract. We are a ground sales force enjoying a solid reputation, a broad selection of relevant products, and proven market focus. Our trade show schedule is robust and engaging. We have touch and reach to America's largest cities and metros, and we intend to use the contract for immediate impact in the largest population centers in our country. Additionally, our marketing plan includes: • Multiple marketing materials displaying the Sourcewell logo and detailed information about the Contract vehicle • Participation with various end users' events, fundraisers, raffles, etc. to further promote our offering of the Sourcewell Contract • Co-branded giveaways, sway, etc. of Sourcewell and Safeware at industry end-user and purchasing trade shows • Sourcewell promotional signage and literature at our trades show booths Please see uploaded documents for samples of marketing line cards that Safeware uses. We have included our Fire, Law Enforcement and Safeware contract line cards.	*

37	Describe your use of technology and digital data (e.g., social media, metadata usage) to enhance marketing effectiveness.	The Safeware marketing strategy consists of several software solutions to help us reach our customers. Our marketing strategy and platforms are as follows: WEBSITE Our website is Business-to-Business Punchout Ready full of enriched item listings for fast and accurate customer searches with enhanced metadata. We use a Product Information Management (PIM) system to house our catalog feeds and item data so customers can shop directly on our website. We currently have contract landing pages on our site for customers of currently held contracts and will set up a Sourcewell landing page that will host all relevant contract information, documents, as well as a link back to the Sourcewell website. Customers are invited to create an account on our website which allows them to access special contract pricing, review account history, and place orders with ease. WEBINARS Technology allows us to reach multiple customers over a broad physical territory by connecting with these customers all at once through a single webinar. Webinars have proven to be a success for Safeware by educating high level buyers in a particular market or public safety issue. By utilizing our knowledge as safety professionals to educate our customers, we build trust as a significant source of knowledge and the go-to source for Public Safety items. Topics for past webinars include those on Emergency Preparedness, Effectiveness of Cooperative Contracts, Outdoor Mass Communication, and LE Equipment for Civil Disturbances. Each session lasts about 30-45 minutes with a live Q&A and is recorded and posted to our page for public access. EMAIL E-mail campaigns and content are run through marketing automation software, Pardot/Salesforce, which allows us to easily send content such as new product offerings or seasonal sale items to all current and potential customers. The program allows us to analyze campaign data such as how many emails were sent as well as the open and clicked percentage. The emails all contain links to landing pages with product information and videos. Successful email blasts have included those on Fentanyl Detection, Confined Space Equipment, and Body Cameras. SOCIAL MEDIA In order to promote our brand and connect with our customers in the ever-changing age of technology, Safeware is active across multiple social media platforms such as Facebook, Twitter, LinkedIn, Instagram, and YouTube. Our dedicated social media manager posts engaging content on at least one platform a day keeping customers updated on information such as the location of our reps at Trade Shows, showing off the newest gadgets to hit the market, or sharing an informative article. We have also built an engaging YouTube channel that has been an extremely useful tool to share internally generated content on various campaigns including Body Cameras, Public Order, Inflatable Decontamination Shelters, Fire Protection, and more. Our videos allow our own knowledgeable staff and safety experts to demonstrate equipment for customers free of charge and are a great educational reference. CRM Our Customer Relationship Management (CRM) tool, Pipedrive, is connected to our marketing automation software, Pardot/Salesforce, allowing for a seamless flow between contacts, leads, and sales. This data capture allows us to better capture the successes of our campaigns. Specialized Content Our specialization in both government purchasing and specific end user technical disciplines enables us to appeal, alternatively, to the Fire, Police, Rescue Captain, or Buyer, with content that resonates with their specific mission. We maintain these specific databases and focus our campaigns on personal content specific to their role.	*

38	In your view, what is Sourcewell's role in promoting contracts arising out of this RFP? How will you integrate a Sourcewell-awarded contract into your sales process?	Safeware would like to be promoted through Sourcewell digital marketing efforts such as email campaigns to Sourcewell members and end users as well as with promotion of our webinars, white papers, and products to relevant users. We would like user contact information for our marketing campaigns and leads that come through the Sourcewell platform or personnel. We expect the Safeware logo and offering to be included in Sourcewell marketing efforts such as collateral and material, displays and discussions at trade shows and webinars or speaking engagements where Sourcewell is present. Safeware will integrate a Sourcewell awarded contract into our sales process by engaging suppliers, end-users, and our internal company resources. Supplier Engagement • Scheduled national educational presentations (in-person and online) about Sourcewell to major suppliers • Joint calls to end-users & purchasing decision makers to introduce as well as reinforce the contract vehicle's benefits over other purchasing options • Joint participation and coordinated manufacturer/distributor campaigns at industry trade shows highlighting Sourcewell contract vehicle purchasing resource • Joint sales calls and presentations with individual manufacturers promoting contract and specific product and/or service to end-user and/or purchaser End-User Engagement • In-person demonstrations of products and trial evaluation programs • 24/7 emergency response to public agencies for products and services in case of natural disasters and other emergencies Internal Company Engagement • Ongoing education about Sourcewell to existing as well as newly hired employees in all roles including outside and inside sales, customer service and upper management as the company expands. • Ongoing joint sales calls with territory managers • Product specific call campaigns by dedicated inside sales force specifically trained in core competencies related to contract offerings including Law Enforcement, Homeland security, Fire, EMS, USAR, Emergency Management, Security, and General Safety. • Monthly company-wide sales meeting to cover: o Progress on existing goals/projects o Identifying upcoming opportunities o Evaluating on-going strategies o Introduction and product knowledge about new products, technology, services and any changes regarding existing supplier portfolio. o Reinforcement of Sourcewell contract sales strategies o Troubleshooting any buying obstacles.	*

39	Are your products or services available through an e-procurement ordering process? If so, describe your e-procurement system and how governmental and educational customers have used it.	Our products are available through an e-procurement ordering process. Any customer has the ability to register for an account on our website which allows them to shop our extensive line of web items and add them directly to a shopping cart. Ordering directly from our website is easy. Simply sign into the ecommerce portion of our website, or register for a new account, which can be completed within 1-business day. Under the shopping tab, customers can use links to browse item categories or search for a specific part number. Once the desired item is located, users simply click “Add to Cart” and the items are added to a Shopping Cart. Users have the option to continue shopping or continue to checkout. The “Save Name Cart” feature allows a user to save a cart and return to it later. This feature is often used when building a cart for a specific PO that may take several days to complete. Simply save the cart (and optionally give it a name), and the saved cart can be retrieved at a later date. Users love this feature as it means they can continually build a cart until they are ready to purchase, even if that requires multiple days. Users can also shop with multiple carts at once, allowing for quick orders to be placed while another cart is saved for a longer period of time. The Checkout Wizard assists customers with a fast and easy checkout process starting by offering a selection of ship-to addresses already set up in our ERP system. Delivery method and billing information is selected, order is reviewed, and check out is completed. An order acknowledgment is immediately sent to the user upon checkout and another automated email sent upon item shipment with tracking information. The My Account area of the site can be controlled per user to allow or disallow certain functionality. Controlled access for each web user gives visibility to statements, invoices, purchase history, etc. allowing us to meet each customer’s privacy needs. Upon placing an order, users will immediately receive an HTML formatted email containing their order details. Users can use this email to return to the site and check the status of their order. There is also a feature for Multiple Account Access which allows a single username to have access to multiple account codes. Utilizing this technology, a single user, or purchasing agent, can access multiple customer accounts to place orders, view invoices, purchase history, pricing, etc. This feature is especially useful for Public Agency buyers who may purchase for multiple departments within their Agency, ex. a city Police Department, Fire Department, and Public Works. Punch Out Sites Safeware currently has the ability to connect via punch out with several procurement applications such as SAP Ariba, Coupa, SciQuest, Eqallevel, Oracle, SAP, and CommBuys and are actively seeking out new partnerships in this arena. We are also able to utilize direct API’s with procurement agencies via EDI and have the ability to adapt to each agency’s unique needs utilizing all of the major programming languages such as XML, cXML, OCI, etc. Our current website developers have implemented each of these using their proprietary system. Integration Safeware has successfully integrated with multiple public agencies’ purchasing systems such as Sciquest, Equallevel, Ariba, Commbuys and Peoplesoft. These integrations are initially supported through our Marketing department and automatic order integration into our system is monitored.	*

Table 8: Value-Added Attributes

Line Item	Question	Response *	
40	Describe any product, equipment, maintenance, or operator training programs that you offer to Sourcewell participating entities. Include details, such as whether training is standard or optional, who provides training, and any costs that apply.	Safeware offers both added value and fee-based training to our contract customers. We offer services within the scope of this contract including: • Sizing and fitting • Train the trainer programs • Testing and evaluation samples and demo • Operator training • Regional Seminars on relevant topics such as fentanyl response and radiation safety We offer many services for a fee which can be found on our Technical Service Price List, including: • Respiratory fit testing • Level A Suit testing • Gear cleaning to NFPA standards • SCBA flow testing • Hydrostatic testing • Compressor service	*

41	Describe any technological advances that your proposed products or services offer.	The products that Safeware is offering represent the most current products in demand in the marketplace. This is everchanging. For example, recently based on customer demand, we added supplier Pendar to provide public entities with Chemical detection. We added supplier Skydio to provide drones that offer broader solutions than the drones currently in operation for traditional police use. As customer needs pivot, we adapt with the newest technology in the market. The proposed products specified here are the result of our passion to provide the very latest technology to our customers.	*
42	Describe any "green" initiatives that relate to your company or to your products or services, and include a list of the certifying agency for each.	Safeware cares about the environment and makes every attempt to do business in a way that promotes sustainability by reducing our carbon footprint and greenhouse gasses. The following policies reflect our commitment to personal, global, and social responsibility: • Maximize electronic and paperless communication • Electronic ordering and billing • Use of teleconferencing and web presentations • Use of VMI, consignment and aggregate deliveries to reduce fuel consumption • Minimize square footage required at each location • Encourage telecommuting when feasible • Emphasize efficiency in all areas • Reduce air travel as much as possible • Reuse boxes in all warehouses • Purchase and choose post-consumer waste recycled paper for all printing, reports, catalogs, and flyers • Make recycling part of the company culture with convenient recycling bins for paper, cans, and bottles • Choose American Made products that do not have to travel as far to reach the end consumer Our strategy, as evident in our policies, aims to reduce waste and carbon footprint in all aspects of our business. Our VP of Operations is responsible for implementing and enforcing these green initiatives. Specific investments include recycling paper waste, aluminum cans, plastic bottles, toner cartridges, valves and metal cylinders, and replacing lighting to high efficiency ballasts with motion sensors. We utilize recycled products for shipping such as cardboard and fillers whenever possible and look to partner with suppliers that use green products. Safeware also accepts used batteries, cylinders and various scrap products at no charge from customers to assist in the recycling of these products. As far as product goes, while Safeware is dedicated to offering our customers environmentally preferable products wherever available, we have found that this industry lacks manufacturers with the same focus. Less than 1% of our suppliers offer environmentally preferable products. Due to the nature of products in the industry, product is often manufactured with the highest level of material to ensure safety rather than using recycled material that may not offer the same quality. End users are willing to pay for the product as is because they prioritize safety of the product over environmentally preferable product. We have contacted large manufacturers such as Dupont, 3M, and Honeywell, none of which have a significant offering of green designated product. We are continually revisiting this issue and will offer environmentally preferred product when our manufacturers do the same.	*
43	Identify any third-party issued eco-labels, ratings or certifications that your company has received for the equipment or products included in your Proposal related to energy efficiency or conservation, life-cycle design (cradle-to-cradle), or other green/sustainability factors.	Safeware offers a range of eco-friendly products that are found on our website in the "Green Products" category. Users can sort through Green Products by browsing or using filters to quickly find the relevant items. Though none of our products specifically have any third-party environmental certifications, a number our products are classified as "green" or environmentally friendly including: • ShowaBest Biodegradable gloves • Rayovac and Duracell rechargeable batteries • LED flashlight • Moldex non-PVC plugs • Cotton and Polyknit glove recycle programs • Presoaked chemical wipes • All-Natural oil-sorbent products • Simple Green • Environmentally safe firefighting foam	*
44	Describe any Women or Minority Business Entity (WMBE), Small Business Entity (SBE), or veteran owned business certifications that your company or hub partners have obtained. Upload documentation of certification (as applicable) in the document upload section of your response.	Safeware is not a certified WMBE, SBE, or Veteran Owned Business. We are self-certified as a Small Business in the federal space. We enjoy and seek out opportunities to partner with local WMBE, SBE, DBE and other designated businesses when the opportunity presents itself and is in the best interest of the customer.	*

45	What unique attributes does your company, your products, or your services offer to Sourcewell participating entities? What makes your proposed solutions unique in your industry as it applies to Sourcewell participating entities?	Safeware is a unique supplier in the public safety and emergency management market. The channel was established based on a fragmented network of independent dealers. This dealer network was designed to accommodate a large number of customer departments, some of them volunteers, which represented a fragmented and difficult to reach customer base requiring highly specialized products. The dealer channel was established so that a vast network of very small, independent dealers would cover this large quantity of small departments in a specified region. The manufacturers could not directly reach these end-users, so they focused on the larger departments and drew that business through the local dealer who carried the same products to the locals in the area. This traditional market has served the public safety and emergency management market for many years, and many quality small distributors continue to serve these local markets. Safeware has brought a national presence to the public safety and emergency management market. Our market focus has flourished around the users in the departments who are historically underserved with growth centered around HAZMAT and Rescue and Dive equipment, for example. We have been market leaders in providing ballistic protection in fire teams and providing timely response innovations such as tourniquets, plates, and carriers for Police and Fire, fentanyl response, and pandemic/virus supplies. Safeware has a market focus in the US's largest cities, and we provide personal, hands-on service in these markets with local representation. Over the past ten years, our efforts to create a national footprint with local service representation have resulted in a unique approach to this market.	*

Table 9: Warranty

Describe in detail your manufacturer warranty program, including conditions and requirements to qualify, claims procedure, and overall structure. You may upload representative samples of your warranty materials (if applicable) in the document upload section of your response in addition to responding to the questions below.

Line Item	Question	Response *	
46	Do your warranties cover all products, parts, and labor?	The scope of this contract is very broad and involves thousands of products, each of which has its own warranty. There is no general answer to the overall warranty for products though we are proud of our reputation for solving customers concerns in a timely and satisfactory manner. Safeware honors all applicable manufacturers' warranties. Products purchased under this contract will be covered by the warranties established by the manufacturer.	*
47	Do your warranties impose usage restrictions or other limitations that adversely affect coverage?	Manufacturers' warranties almost always cover workmanship and normal wear and tear. There are typically exclusions for failure due to customer neglect or improper use.	*
48	Do your warranties cover the expense of technicians' travel time and mileage to perform warranty repairs?	We are not aware of any manufacturers' warranties that cover these costs.	*
49	Are there any geographic regions of the United States or Canada (as applicable) for which you cannot provide a certified technician to perform warranty repairs? How will Sourcewell participating entities in these regions be provided service for warranty repair?	We have no territory restrictions regarding warranty support.	*
50	Will you cover warranty service for items made by other manufacturers that are part of your proposal, or are these warranties issues typically passed on to the original equipment manufacturer?	All items for this contract are provided by Safeware. We do not refer customers to the manufacturer for warranty support. Rather, we coordinate all applicable warranty support for our customers. Safety concerns and recalls of products are tracked by our Quality Manager to insure a timely response. Warranty claims and concerns can be handled by contacting a Safeware representative who will have an RMA issued for the product and oversee the repair or replacement of products covered by manufacturer's warranties.	*
51	What are your proposed exchange and return programs and policies?	We offer a 60-day policy for refund and exchange of non-custom merchandise. If the end user does not contact us within 60-days of receiving products, we cannot guarantee a return or exchange. Return Policy: All returns and exchanges must be authorized by a company representative and a Return Material Authorization (RMA) must be issued to the requesting entity prior to any return shipment. Returns may be subject to a restocking fee per the Original Equipment Manufacturers (OEM) requirements. Return freight is the responsibility of the customer. Refunds will only be provided on new product in OEM packaging. Safeware reserves the right to withhold outbound freight costs from any issued credit. All returns must be returned to Safeware within 30 days of RMA issuance or RMA will be cancelled.	*
52	Describe any service contract options for the items included in your proposal.	Safeware is including a services price list with our proposal. Service contracts based on this service pricing are available under the proposed agreement.	*

Table 10: Payment Terms and Financing Options

Line Item	Question	Response *	
53	Describe your payment terms and accepted payment methods.	Our payment terms are Net 30.	*
54	Describe any leasing or financing options available for use by educational or governmental entities.	Any item listed on this contract may be offered as a leased item. Purchase orders for leased items must be made out to the leasing agent, however Safeware holds the leasing agent responsible for reporting to us so that these contract sales will be reported to Sourcewell and included in the administrative fee.	*
55	Describe any standard transaction documents that you propose to use in connection with an awarded contract (order forms, terms and conditions, service level agreements, etc.). Upload a sample of each (as applicable) in the document upload section of your response.	Safeware is flexible. We do not have any standard transaction documents that customers are required to utilize.	*
56	Do you accept the P-card procurement and payment process? If so, is there any additional cost to Sourcewell participating entities for using this process?	Yes, Safeware accepts P-Cards and there are no additional costs to pay with a P-Card.	*

Table 11: Pricing and Delivery

Provide detailed pricing information in the questions that follow below. Keep in mind that reasonable price and product adjustments can be made during the term of an awarded Contract as described in the RFP, the template Contract, and the Sourcewell Price and Product Change Request Form.

Line Item	Question	Response *	
57	Describe your pricing model (e.g., line-item discounts or product-category discounts). Provide detailed pricing data (including standard or list pricing and the Sourcewell discounted price) on all of the items that you want Sourcewell to consider as part of your RFP response. If applicable, provide a SKU for each item in your proposal. Upload your pricing materials (if applicable) in the document upload section of your response.	Safeware's proposed pricing model for this contract is a Percentage Discount from Catalog/Category. A uniform discount taken from the published Safeware Catalog Price will be offered across all product categories in this contract, and a separate discount will be offered for all services. The discounts will be applicable for all products and services in the Safeware Catalog, which is encompassed of individual price files for each of our vendor partners. See Safeware Pricing Attachment for discounts by Category as well as a Supplier/Manufacture list of currently available product lines. We have also attached over 220 of our current Catalog Price files. The products included in this RFP response will be defined as those products found in the Safeware Catalog. The Safeware Catalog will be available online* and may be updated at any time, though the stated contract discounts will not decrease for the life of the contract. The prices indicated in these files will represent the ceiling price for the contract. Contract Prices may be reduced at any time. *Exception: Please note that due to national security concerns, certain security sensitive product price lists will be provided upon request and will not be available online. Catalog Updates Our suppliers are constantly updating their products lines in order to provide our public safety customers with the newest technologies, items, and services to keep them safe. Because of this ongoing innovation, Safeware in turn is constantly updating our catalog based on new manufacture relationships and updating price files with additional product, removing outdated and discontinued products, and editing products part numbers and descriptions. As a consequence of the extreme economic circumstances, some suppliers and items require frequent price updates. Due to the vast number of product lines and SKU's included in the scope of this contract, such changes are expected to take place daily so Safeware proposes the following Product and Pricing Change Protocol: Safeware's Contract Pricing will be available online	*

		via our individual Catalog Price Lists for each of our suppliers. The posted price lists will demonstrate the current contract pricing, which will be updated in real time as needed. Once per quarter, Safeware will provide Sourcewell with an updated Contract Supplier List, along with a list of price files that have been updated in the previous 3 months. Upon request, we will provide copies of the updated price lists (which can also be found online) as well as details to justify the changes. Catalog Location/Access Safeware Catalog Pricing will be located on our website. Because we know that not all government procurement departments work the same, we have developed several methods for checking compliance with our contract pricing. Upon award, we will create a landing page for Sourcewell customers to view the Public Safety and Emergency Management Contract Documents and Contract Supplier List. Pricing will be made available in the following formats: 1. PDF Catalog Price Files will be published to our website, accessible to customers with a login/password (temporary login information is below). 2. PDF Catalog Price Files will be published to a file sharing website either Exavault or OneDrive, accessible to anyone with the link. 3. Items available through our website will show Safeware Catalog Price as well as the contract discount to customers who are logged into our website. Website Link: https://www.safewareinc.com/ Username: sourcewellcustomer@safewareinc.com Password: Sourcewell@12345	
58	Quantify the pricing discount represented by the pricing proposal in this response. For example, if the pricing in your response represents a percentage discount from MSRP or list, state the percentage or percentage range.	Sourcewell members will receive a 41% discount off Safeware Catalog List price for products and a 10% discount for Services and Training. Market Basket In order to demonstrate the depth and breadth of products offered, as well to provide an example of our pricing, we have created a Market Basket of items that are a representative sample of the items we will provide as part of this contract. Please see Safeware Pricing Attachment for the Market Basket.	*
59	Describe any quantity or volume discounts or rebate programs that you offer.	Safeware routinely offers our state and local government customers functional discounts on one-time large purchases. Sales greater than $20,000 may be eligible for additional price discounts from manufacturers and are flagged in our system to indicate that additional price concessions should be sought from the manufacturer. Additional discounts will be evaluated and offered on a case-by-case basis. Such discounts may occur for myriad reasons including volume, quantity, special manufacturer discounts, or Dealer of Record (DOR) programs. Safeware makes a practice of passing along additional discounts to our customers, so the discounts offered for product will always be at least 41% (10% for services). Many Safeware customers have their own rebate and incentive programs based upon customer requirements. Rather than offering a single program for all public agencies, we will continue to follow the incentives provided by individual customers. Such rebates are not formulaic, but we will work with each specific municipality to offer rebates specific to their purchase.	*

60	Propose a method of facilitating “sourced” products or related services, which may be referred to as “open market” items or “nonstandard options”. For example, you may supply such items “at cost” or “at cost plus a percentage,” or you may supply a quote for each such request.	If a customer requires an item not currently found in the Safeware Catalog, Safeware will provide a quote for such request and the item will be added to the Safeware Catalog for future contract ordering. The minimum discount will remain 41% for products and 10% for services. Safeware anticipates adding additional product to this contract as we form relationships with new suppliers in the Public Safety market. When this occurs, we will add the new product lines to our online catalog, via a Safeware Catalog Price file for that manufacturer. Additions to the contract will be an on-going process, and quarterly updates will be communicated to Sourcewell per the process detailed in question 57 above.	*
61	Identify any element of the total cost of acquisition that is NOT included in the pricing submitted with your response. This includes all additional charges associated with a purchase that are not directly identified as freight or shipping charges. For example, list costs for items like pre-delivery inspection, installation, set up, mandatory training, or initial inspection. Identify any parties that impose such costs and their relationship to the Proposer.	All costs of acquisition are included in the item pricing. There will be no third-party costs imposed on the customer. If installation or training is required, it will be quoted to the customer before the sale and will be listed as a separate line item on the quote.	*
62	If freight, delivery, or shipping is an additional cost to the Sourcewell participating entity, describe in detail the complete freight, shipping, and delivery program.	Standard ground shipping to the contiguous United States (lower 48) will be included in the pricing for Sourcewell Members. Any expedited, over-night, courier, and any other nonstandard ground shipping deliveries will be billed. Additionally, HAZMAT fees will be billed. NOTE: HAZMAT fees, which are imposed by the shipper, will be billed at cost, but are typically $39/case of material shipped. Safeware also provides technical service to items sold through the contract. When customer owned equipment is sent to Safeware for maintenance or repair, the customer will be responsible for those costs.	*
63	Specifically describe freight, shipping, and delivery terms or programs available for Alaska, Hawaii, Canada, or any offshore delivery.	Freight will be billed on all contract orders delivered to Alaska, Hawaii, US Territories, and Canada. This includes standard, expedited, over-night, courier shipping or any other nonstandard shipping. Additionally, HAZMAT fees will be billed. NOTE: HAZMAT fees, which are imposed by the shipper, will be billed at cost, but are typically $39/case of material shipped.	*
64	Describe any unique distribution and/or delivery methods or options offered in your proposal.	Safeware has vast experience in dealing with national emergencies that have required the use of unique delivery methods. (See response to Table 6, question 30.) We have shipped products using next flight out, expedited ground shipping, and have also booked cargo planes, hired couriers, and even utilized helicopter delivery. Safeware is very familiar with special ways to get product to our customers when conventional methods do not meet requirements	*

Table 12: Pricing Offered

Line Item	The Pricing Offered in this Proposal is: *	Comments
65	b. the same as the Proposer typically offers to GPOs, cooperative procurement organizations, or state purchasing departments.	

Table 13: Audit and Administrative Fee

Line Item	Question	Response *	

66	Specifically describe any self-audit process or program that you plan to employ to verify compliance with your proposed Contract with Sourcewell. This process includes ensuring that Sourcewell participating entities obtain the proper pricing, that the Vendor reports all sales under the Contract each quarter, and that the Vendor remits the proper administrative fee to Sourcewell. Provide sufficient detail to support your ability to report quarterly sales to Sourcewell as described in the Contract template.	Safeware has enjoyed over a decade of experience with national cooperative contracts. During that timeframe, we have learned techniques and systems to employ that assure contract compliance and pricing auditability. Our proposal includes pricing calculated by a uniform discount applied to an electronic Safeware list price. This allows our internal system tied to the Sourcewell contract to follow a formula that can only create a price by applying this discount level to the Safeware list price. All orders are placed by our internal customer service team and our internal system will flag any questionable items or proposals that do not match this formula. This same system allows us to track sales by a Sourcewell contract code and providing up to date spend analysis and reporting. This code applies to any eligible customer for Sourcewell in our system and will capture all contract sales referencing this number. This process allows both Safeware and Sourcewell to be confident that the fee reported to Sourcewell and paid by Safeware is in accordance with the contract.	*
67	If you are awarded a contract, provide a few examples of internal metrics that will be tracked to measure whether you are having success with the contract.	As previously discussed, we have a system in place that will track every Sourcewell contract order. With this information, we can create a wide variety of reports that will look at growth in sales across individual customer, customer class, or even region. We distribute weekly reports to our sales team around orders placed, orders shipped, and orders that have billed. We summarize our sales for our group each month and will include this Sourcewell contract to create a visual of sales growth and success with the contract.	*
68	Identify a proposed administrative fee that you will pay to Sourcewell for facilitating, managing, and promoting the Sourcewell Contract in the event that you are awarded a Contract. This fee is typically calculated as a percentage of Vendor's sales under the Contract or as a per-unit fee; it is not a line-item addition to the Member's cost of goods. (See the RFP and template Contract for additional details.)	Safeware understands that there are soft costs included with soliciting, awarding, managing, marketing and promoting a cooperative contract. We appreciate the opportunity to have this vehicle available for customers to save them the costs of this process and get the safety products that they need in an expeditious and efficient manner. Having said that, Safeware has built a brand in the marketplace over the past 40 plus years as the go-to supplier for public safety needs. Our field team will be promoting this cooperative vehicle with their customer contacts and actively engaging customers in the field. Safeware is a national distributor of safety products and because of that we operate on a limited amount of gross profit per sale, often single digits of margin. We do not operate like many other manufacturers who can just include an additional percentage in their list price to cover a cooperative fee. Our proposal also includes shipping in the price of each item which will come directly out of that gross profit number. Furthermore, a single or dual award will result in larger opportunities for both Sourcewell and Safeware. After taking these considerations into account, Safeware proposes the following administrative fee options for all Sourcewell contract sales: • Two or less vendors are awarded a contract o 1.5% Admin fee • Four or less vendors are awarded a contract o 1.0% Admin fee • Five or more vendors are awarded a contract o 0.75% Admin fee We can pay this fee quarterly or annually based upon closed contract sales. This will not be listed as a separate line item or fee to the end using entity and will be paid by Safeware directly out of our gross profit on all Sourcewell contract sales.	*

Table 14A: Depth and Breadth of Offered Equipment Products and Services

Line Item	Question	Response *
69	Provide a detailed description of the equipment, products, and services that you are offering in your proposal.	We are Public Safety and Emergency Management experts. Safeware maintains relationships with a myriad Public Safety manufacturers and vendors and is constantly making new partnerships as we discover new and innovative product lines. Safeware is proposing products and solutions that meet the requirements of all the categories outlined in this RFP. We are submitting Safeware Catalog Price files for over 220 of these manufacturers, including a Safeware Technical Service Price File, (See Pricing Zip File) and will continue to update our offering for the life of the contract. A Supplier/Manufacture list of currently available product lines can be found as an attachment in the Pricing Zip File. Safeware is more than a provider of product – we offer an entire spectrum of capability. When a public entity has a specific need or requirement, whether it is a product or service, we have the capacity to source and fulfill those needs in a timely fashion for every category. Here are examples of the types of products offered in each of the categories: • Law Enforcement and Corrections: Safeware offers a full suite of Law Enforcement and Corrections products and solutions. Examples include, but are not limited to, ballistic protection, biometrics, cameras and accessories, civil disturbance, clothing, communications equipment, crime scene equipment, security operation centers and control room equipment, license plate recognition, detection, device mitigation, drones, duty gear, enterprise systems, eye protection, forensics, hand, head and face protection, optics, radio communications, K9 and animal supply, respiratory protection, real time crime centers and emergency operations centers, robotics, PSIM, safety and security tools, security consulting, training and simulations, tactical wear, tactical medical and first aid supplies, video and sound analytics, facial recognition, security center display walls, corrections access controls and locks, doors, gates, fencing, and key management, video surveillance, visitor management, suicide radar and more. • Fire, EMS, and Search and Rescue: Safeware offers a full suite of Fire, EMS, and Search and Rescue products and solutions for first responders. Examples include, but are not limited to, clothing, communications, drones, equipment storage, first aid, lighting, hand and foot protection, gas detection, HAZMAT response, head and face protection, decontamination, rescue gear, respiratory protection, robots, service, suppression, technical rescue gear, tents and shelters, thermal imaging, video and sound analytics, tools, training, turnout gear, workwear and more. • Medical, Health Service and Public Health: Safeware offers a full range of Medical, Health Service and Public Health products and solutions for Sourcewell Members. Examples include, but are not limited to, PPE, respiratory protection, disinfection equipment, medical surge, medical supplies and devices, public health shelter systems, utility shelters, medical surge beds, traffic safety, training, vapor detection, panic alerts and more. • Human Services, Housing, Homelessness, and Mental Health: Safeware offers a full range of Human Services, Housing, Homelessness, and Mental Health products and solutions for customers. Examples include, but are not limited to, temporary shelters, cots, temporary showers, decontamination supplies, temporary offices, walk thru detection, bottled water, MRE's, PPE, video surveillance, fencing and more. • Emergency Management: Safeware offers a full range of Emergency Management products and solutions for natural and homeland disasters, crises, civil disturbance, pandemics, and any other emergency that may arise. We offer a 1-800 number for Sourcewell Members to call 24/7. Examples include, but are not limited to, shelters, rescue gear, first aid, filtration systems, PPE, HAZMAT response, respiratory protection, decontamination, training, CERT equipment, mobile command equipment and more. • Public Utilities and Public Works: Safeware offers a full range of Public Utilities and Public Works products and solutions. Examples include, but are not limited to, clothing, protection kits, barricade tapes, chemical protective, communications equipment, confined space, enterprise systems, footwear, protective gloves, hard hats, hearing protection, lockout tagout, repellant, respirator/air filtration, respiratory protection, safety eyewear, signs, turnout gear, workwear, emergency eye wash, water safety, hi-visibility apparel and outerwear, fall protection, detection, security consulting, design engineering, installation and service and more. • Transit and Transportation: Safeware offers a full range of Transit and

		Transportation products and solutions. Examples include, but are not limited to, fall protection, head, hearing, eye and face protection, biometrics, drones, training, thermal cameras, communications equipment, enterprise systems, gas detection, security screening and threat detection, security operations centers and control room equipment, PSIM, video and sound analytics, facial recognition, security center display walls, video surveillance, security consulting and more. • Providers of services similar or related to the services described in subsections above: o Services: Safeware provides value added services, including but not limited to: SBCA maintenance and repair, SCBA flow testing, cylinder hydrostatic testing, fit testing, CBRNE instrument calibrations and repair, level A suit testing, fire hose testing, PPE cleaning, air compressor repair and maintenance and breathing air testing. o On-Site Training Services: We offer many services that require on-site training or testing to insure proper use of equipment for end users. Such services include, but are not limited to: Respirator Fit Testing Product training/operation Donning/doffing PPE Fitting helmets Fitting PPE Fitting uniforms, boots Confined Space entry training Sign surveys Eyewash surveys OSHA compliance surveys o Training: Our training includes, but is not limited to, the following categories: Drug Enforcement Active Aggressor Drone Rope Rescue Hazardous Chemical Public Order Strategy o Consulting: Our sales representatives advise customers on proper equipment needed for specific situations. Examples of this include Safeware's offering of public order gear in which we have been pioneers in the industry. o Leasing/Financing: Any item listed on this contract may be offered as a leased item. Purchase orders for leased items must be made out to the leasing agent, however, Safeware holds the leasing agent responsible for reporting to us so that these contract sales will be reported to Sourcewell and included in the administrative fee. o Garment Services: Safeware offers embellishments and alterations as a component of our uniform offering. o Trade-Ins: Safeware offers trade in programs for contract purchases. These are either special offers from a manufacturer for a specific period of time, or a special incentive offered for a particular piece of business. The Trade-In Program is as follows: A Safeware quote will provide the Contract Price for the new item as well as the Trade-In Value of the item being traded in. The customer will be given a Contract Price Net of the Trade-In. This quote will reference the customer's intent to trade-in material. For example: if the Contract Price for the new item is $100 and the Trade-In Value is $25, then the Net Contract Price will be $75. Upon receipt of order, the Trade-In materials will either be picked up by a Safeware representative or a representative will send a return label for shipment.
70	Within this RFP category there may be subcategories of solutions. List subcategory titles that best describe your products and services.	Law Enforcement and Corrections: • Aviation Supplies • Canine • Crime Scene Equipment • Detection of Hazardous Substances • Domestic Security • EOD/Bomb Equipment • Incident Management • License Plate Recognition and Related Products • Major Crimes / Gang • PPE

		• Real Time Crime Center • Search and Rescue • Tactical Entry • Training • Any Related Products and Services Fire, EMS, and Search and Rescue • Decon Equipment • Detection • Electrical Battery Safety • PPE • Rescue Equipment • Training • Any Related Products and Services Medical, Health Service and Public Health • Field Hospitals and Equipment • Injectors • Medical Devices • Mobile Mortuary • Pandemic Response • PPE • Radiation Safety • Stop the Bleed • Any Related Products and Services Human Services, Housing, Homelessness and Mental Health • Bottled Water • Decontamination • MRE's • Physical Security/Detection • Portable Housing/Shelters • Shelter in Place • Any Related Products and Services Emergency Management • CERT Equipment • Climate Catastrophe Planning • Emergency Shelter • Flood Response and Detection • Incident Management • LCP Water Filtration • Mobile Command • Any Related Products and Services Public Utilities and Public Works • Bridge and Line Inspection and Safety • Detection • Electrical Safety • PPE • Water Safety • Any Related Products and Services Transit and Transportation • Aviation • Detection • Fall Protection • PPE • Training • Any Related Products and Services Services for Public Safety and Emergency Management Solutions • Product Services • On-Site Training Services • Training • Consulting • Leasing/Financing • Garment Services • Trade-Ins • Any Related Services	*

Table 14B: Depth and Breadth of Offered Equipment Products and Services

Indicate below if the Public Safety and Emergency Management Equipment, Tool, and Supply Catalog Solutions offered within your proposal are intended for use by the types of entities listed. Provide additional comments in the text box provided, as necessary.

Line Item	Category or Type	Offered *	Comments	
71	Law enforcement and corrections	(•) Yes ( ) No	The Public Safety and Emergency Management Solutions offered within our proposal are intended for use by this category.	*
72	Fire, EMS, and Search and Rescue	(•) Yes ( ) No	The Public Safety and Emergency Management Solutions offered within our proposal are intended for use by this category.	*
73	Medical, Health Service, and Public Health	(•) Yes ( ) No	The Public Safety and Emergency Management Solutions offered within our proposal are intended for use by this category.	*
74	Emergency Management	(•) Yes ( ) No	The Public Safety and Emergency Management Solutions offered within our proposal are intended for use by this category.	*
75	Public Utilities and Public Works	(•) Yes ( ) No	The Public Safety and Emergency Management Solutions offered within our proposal are intended for use by this category.	*
76	Transit and Transportation	(•) Yes ( ) No	The Public Safety and Emergency Management Solutions offered within our proposal are intended for use by this category.	
77	Providers of services similar or related to the services described in line items 71 - 76 above	(•) Yes ( ) No	The Public Safety and Emergency Management Solutions offered within our proposal are intended for use by all the above categories.	

Exceptions to Terms, Conditions, or Specifications Form

Only those Proposer Exceptions to Terms, Conditions, or Specifications that have been accepted by Sourcewell have been incorporated into the contract text.

Documents

Ensure your submission document(s) conforms to the following:

1. Documents in PDF format are preferred. Documents in Word, Excel, or compatible formats may also be provided.

2. Documents should NOT have a security password, as Sourcewell may not be able to open the file. It is your sole responsibility to ensure that the uploaded document(s) are not either defective, corrupted or blank and that the documents can be opened and viewed by Sourcewell.

3. Sourcewell may reject any response where any document(s) cannot be opened and viewed by Sourcewell.

4. If you need to upload more than one (1) document for a single item, you should combine the documents into one zipped file. If the zipped file contains more than one (1) document, ensure each document is named, in relation to the submission format item responding to. For example, if responding to the Marketing Plan category save the document as "Marketing Plan."

- Pricing - Safeware_Pricing_080922_2022.8.8.zip - Monday August 08, 2022 15:22:25
- Financial Strength and Stability - FinStrength_12.Safeware_FinState2021.pdf - Monday August 08, 2022 15:45:06
- Marketing Plan/Samples - Marketing Plan Documents.zip - Friday August 05, 2022 09:12:52
- WMBE/MBE/SBE or Related Certificates (optional)
- Warranty Information (optional)
- Standard Transaction Document Samples (optional)
- Upload Additional Document - Additional Documents.zip - Thursday August 04, 2022 14:03:19

Addenda, Terms and Conditions

PROPOSER AFFIDAVIT AND ASSURANCE OF COMPLIANCE

I certify that I am the authorized representative of the Proposer submitting the foregoing Proposal with the legal authority to bind the Proposer to this Affidavit and Assurance of Compliance:

1. The Proposer is submitting this Proposal under its full and complete legal name, and the Proposer legally exists in good standing in the jurisdiction of its residence.

2. The Proposer warrants that the information provided in this Proposal is true, correct, and reliable for purposes of evaluation for contract award.

3. The Proposer, including any person assisting with the creation of this Proposal, has arrived at this Proposal independently and the Proposal has been created without colluding with any other person, company, or parties that have or will submit a proposal under this solicitation; and the Proposal has in all respects been created fairly without any fraud or dishonesty. The Proposer has not directly or indirectly entered into any agreement or arrangement with any person or business in an effort to influence any part of this solicitation or operations of a resulting contract; and the Proposer has not taken any action in restraint of free trade or competitiveness in connection with this solicitation. Additionally, if Proposer has worked with a consultant on the Proposal, the consultant (an individual or a company) has not assisted any other entity that has submitted or will submit a proposal for this solicitation.

4. To the best of its knowledge and belief, and except as otherwise disclosed in the Proposal, there are no relevant facts or circumstances which could give rise to an organizational conflict of interest. An organizational conflict of interest exists when a vendor has an unfair competitive advantage or the vendor's objectivity in performing the contract is, or might be, impaired.

5. The contents of the Proposal have not been communicated by the Proposer or its employees or agents to any person not an employee or legally authorized agent of the Proposer and will not be communicated to any such persons prior to Due Date of this solicitation.

6. If awarded a contract, the Proposer will provide to Sourcewell Participating Entities the equipment, products, and services in accordance with the terms, conditions, and scope of a resulting contract.

7. The Proposer possesses, or will possess before delivering any equipment, products, or services, all applicable licenses or certifications necessary to deliver such equipment, products, or services under any resulting contract.

8. The Proposer agrees to deliver equipment, products, and services through valid contracts, purchase orders, or means that are acceptable to Sourcewell Members. Unless otherwise agreed to, the Proposer must provide only new and first-quality products and related services to Sourcewell Members under an awarded Contract.

9. The Proposer will comply with all applicable provisions of federal, state, and local laws, regulations, rules, and orders.

10. The Proposer understands that Sourcewell will reject RFP proposals that are marked "confidential" (or "nonpublic," etc.), either substantially or in their entirety. Under Minnesota Statutes Section 13.591, subdivision 4, all proposals are considered nonpublic data until the evaluation is complete and a Contract is awarded. At that point, proposals become public data. Minnesota Statutes Section 13.37 permits only certain narrowly defined data to be considered a "trade secret," and thus nonpublic data under Minnesota's Data Practices Act.

11. Proposer its employees, agents, and subcontractors are not:
    1. Included on the "Specially Designated Nationals and Blocked Persons" list maintained by the Office of Foreign Assets Control of the United States Department of the Treasury found at: https://www.treasury.gov/ofac/downloads/sdnlist.pdf;

    2. Included on the government-wide exclusions lists in the United States System for Award Management found at: https://sam.gov/SAM/; or

    3. Presently debarred, suspended, proposed for debarment, declared ineligible, or voluntarily excluded from programs operated

by the State of Minnesota; the United States federal government or the Canadian government, as applicable; or any Participating Entity. Vendor certifies and warrants that neither it nor its principals have been convicted of a criminal offense related to the subject matter of this solicitation.

☑ By checking this box I acknowledge that I am bound by the terms of the Proposer's Affidavit, have the legal authority to submit this Proposal on behalf of the Proposer, and that this electronic acknowledgment has the same legal effect, validity, and enforceability as if I had hand signed the Proposal. This signature will not be denied such legal effect, validity, or enforceability solely because an electronic signature or electronic record was used in its formation. - Mary Pelfrey, Executive Director, Safeware, Inc.

The Proposer declares that there is an actual or potential Conflict of Interest relating to the preparation of its submission, and/or the Proposer foresees an actual or potential Conflict of Interest in performing the contractual obligations contemplated in the bid.

○ **Yes** ◉ **No**

The Bidder acknowledges and agrees that the addendum/addenda below form part of the Bid Document.

Check the box in the column "**I have reviewed this addendum"** below to acknowledge each of the addenda.

File Name	I have reviewed the below addendum and attachments (if applicable)	Pages
Addendum_7_Public_Safety_and_Emergency_Management_Equipment_RFP_080922 Thu August 4 2022 10:54 AM	☑	1
Addendum_10_Public_Safety_and_Emergency_Management_Equipment_RFP_080922 Mon August 1 2022 04:32 PM	☑	2
Addendum_9_Public_Safety_and_Emergency_Management_Equipment_RFP_080922 Thu July 28 2022 04:03 PM	☑	1
Addendum_8_Public_Safety_and_Emergency_Management_Equipment_RFP_080922 Wed July 27 2022 10:43 AM	☑	1
Addendum_6_Public_Safety_and_Emergency_Management_Equipment_RFP_080922 Thu July 21 2022 04:32 PM	☑	1
Addendum_5_Public_Safety_and_Emergency_Management_Equipment_RFP_080922 Thu July 14 2022 03:16 PM	☑	1
Addendum_4_Public_Safety_and_Emergency_Management_Equipment_RFP_080922 Wed July 13 2022 01:21 PM	☑	1
Addendum_3_Public_Safety_and_Emergency_Management_Equipment_RFP_080922 Mon July 11 2022 02:31 PM	☑	1
Addendum_2_Public_Safety_and_Emergency_Management_Equipment_RFP_080922 Fri July 8 2022 01:36 PM	☑	1
Addendum_1_Public_Safety_and_Emergency_Management_Equipment_RFP_080922 Thu June 30 2022 01:20 PM	☑	2

EXHIBIT B
TO
COOPERATIVE CONTRACT PURCHASE ADDENDUM
CONTRACT NO. 2025217

[Fee Schedule]

See following page(s).

Safeware #080922-SAF

Pricing for contract #080922-SAF for Sourcewell participating agencies is as listed below.

Safeware Catalog – 41% off list price
Services and Training – 10% off list price

CITY OF BUCKEYE
Regular Council Meeting
COUNCIL ACTION REPORT

MEETING DATE: 12/17/24	**AGENDA ITEM:** 4.Q. FIN - Approve Resolution No. 79-24 for Designation of an Authorized Representative and Alternate Authorized Representative to apply to the Arizona Department of Emergency and Military Affairs for financial assistance under the Public Assistance program and/or Disaster Relief Act grant programs
DATE PREPARED: 12/17/24	**DISTRICT NO.:** All
STAFF LIAISON: Rob Roach, Grant Program Manager, rroach@buckeyeaz.gov, (623) 349-6165	
DEPARTMENT: Financial Services	**AGENDA ITEM TYPE:** Consent Agenda Items / New Business

ACTION/MOTION: (This language identifies the formal motion to be made by the Council)
Council to approve Resolution No. 79-24 for the designation of the applicant's Authorized Representative and Alternate Authorized Representative forms submission to the Arizona Department of Emergency and Military Affairs, which designates the City's representatives for applying for certain public assistance; and authorizing the Applicant's Authorized Representatives to execute and deliver said application on behalf of the City of Buckeye.

SUMMARY

PROJECT DESCRIPTION:
The City of Buckeye was awarded a $26,332.04 grant award by the Arizona Department of Emergency and Military Affairs for COVID 19-related expenses that the City incurred in prior years (Award). The Arizona Department of Emergency and Military Affairs requires the City of Buckeye to designate an Authorized Representative and an Alternate Authorized Representative. Resolution No. 79-24 satisfies this requirement. These designations authorize designees to execute and deliver documentation on behalf of the City of Buckeye for the purpose of receiving financial assistance under the Public Assistance program and/or other Disaster Relief Act grant programs.

BENEFITS:
The Award provides $26,332.04, with no match requirement, to the City of Buckeye for prior years' incurred costs related to COVID-19, such as public safety personnel costs, personal protection equipment, sanitizer, public safety education, and other related costs.

FUTURE ACTION:
After Council approval, no further actions will be required. As is normal, the City will submit a reimbursement request to the Arizona Department of Emergency and Military Affairs for the prior-incurred expenses.

FINANCIAL IMPACT STATEMENT:
There is no further financial impact associated with the designation of an Authorized Representative and Alternate Authorized Representative.

CURRENT FISCAL YEAR TOTAL COST:
$0

BUDGETED:
Yes

FISCAL YEAR:
2025

FUND/DEPARTMENT:
Finance

Items related to a project or facility location must include an attached vicinity map for Council Review.
ATTACHMENTS:
CAR Recap Summary AZ DEMA Authorized Rep.docx
City of Buckeye Disaster Agreement - unsigned.pdf
Resolution 79-24 Designation of Authorized Rep DEMA.pdf

Designation of Authorized Representatives for the Arizona Department of Emergency and Military Affairs
Summary Recap

Project Description:

The City of Buckeye was awarded a $26,332.04 grant award by the Arizona Department of Emergency and Military Affairs. The Arizona Department of Emergency and Military Affairs requires the City of Buckeye to designate an Authorized Representative and an Alternate Authorized Representative. The Council resolution satisfies this requirement. These designations authorize designees to execute and deliver documentation on behalf of the City of Buckeye for the purpose of obtaining financial assistance under the Public Assistance program and/or other Disaster Relief Act grant programs. The award provides $26,332.04 for Covid 19 related expenses that were incurred in prior years.

Project Cost

- $ 26,332.04 (Fully Reimbursable based on budget)

Required Match

- $ 0

Grant Amount

- $ 26,332.04

Plans Once Grant Expires:

- After Council approval, no further actions will be required. As is normal, the City will submit a reimbursement request to the Arizona Department of Emergency and Military Affairs for Covid 19 related expenses that were incurred in prior expenses.

Objectives and Expected Outcomes

- The award provides $26,332.04, with no match requirement, to the City of Buckeye for costs incurred in prior years related to Covid 19, such as public safety personnel costs, personal protection equipment, sanitizer, and other Covid 19 related costs.

Time Period for the Grant

- Fiscal Year 2025

DISASTER ASSISTANCE AGREEMENT FOR FEDERALLY DECLARED
(Political Subdivisions)

This agreement (the "Agreement") between the Department of Emergency and Military Affairs, Division of Emergency Management, State of Arizona ("Division" or "State"), and CITY OF BUCKEYE ("Applicant") shall be effective on the date signed by both parties. This Agreement shall apply to all assistance funds provided by the State to the Applicant as a result of 4524-DR-AZ-COVID-19, which occurred JANUARY 20, 2020 THROUGH MAY 11, 2023, and pursuant to the President's Major Disaster Declaration on MARCH 13, 2020 and Major Disaster Declaration on APRIL 4, 2020.

By signing this Agreement on behalf of Applicant, the person signing represents that he/she is the Agent of the Applicant, and certifies and agrees on behalf of the Applicant that:

1. The person signing below has legal authority to apply for assistance on behalf of the Applicant.

2. The Applicant is an eligible applicant as defined in AAC R8-2-301(2) and 2 CFR § 200.93.

3. Any change to the Applicant's Agent or the Agent's contact information must be provided to Division in writing.

4. The Applicant shall provide all necessary financial and managerial resources to meet the terms and conditions of receiving State and Federal disaster assistance. The Division does not manage or take responsibility for the Applicant's projects, and monitors projects (with regard to program eligibility and other requirements) only in order to protect the State's interests.

5. The Applicant understands this is a reimbursement program and the Applicant generally must expend its own funds for an approved project prior to being reimbursed. All requests for an advance of funds must be made in writing and shall be signed by the Applicant's Agent and forwarded to the Director of the Division (the "Director"). The Director shall assess a request for an advance to determine whether the request is reasonable and for eligible work that has been completed. The Director may grant a request for an advance for work not completed only if the Applicant has demonstrated that the work cannot be completed without an advance. The amount of an advance will be based upon damage assessment, eligible costs to date and the estimated eligible costs for the next 60-day period (AAC R8-2-315). Partial payments can be processed as work is completed and costs expended. Final payment will be made after all work is completed and claimed costs have been audited (AAC R8-2-316).

6. The Applicant shall establish and maintain a proper accounting system to record costs of disaster assistance funds in accordance with generally accepted accounting standards or as directed by the Governor's Authorized Representative ("GAR") or Alternate GAR to ensure compliance with audit requirements, and shall retain all financial and program documentation for a minimum of three years after the date of the State's final Financial Status Report to the Federal Emergency Management Agency ("FEMA") per 2 CFR 200.302 and 2 CFR 200.333. The Division will notify the Applicant, via the Applicant's

Agent, as to when the three year retention begins. Pursuant to ARS 35-214 and 215 and AAC R8-2-318, the Applicant shall include in all contracts with all contractors requirements that (a) all of the contractor's books, accounts, reports, and other records relating to the contract shall be retained by the contractor and shall be subject to inspection and audit by the Division for five years after completion of the contractor's contract, and (b) the contractor shall include in all contracts with all subcontractors (and shall require all contractor's subcontractors to include in their contracts with their subcontractors) the requirement that all of the subcontractor's books, accounts, reports, and other records relating to the subcontract shall retained by the subcontractor and shall be subject to inspection and audit by the Division for five years after completion of the contractor's contract.

7. The Applicant shall cooperate with Division personnel in performing interim monitoring inspections and/or final inspections of the project site, per 2 CFR 200.328 and AAC R8-2-316.

8. Regardless of whether or not the Applicant is otherwise exempt from complying with such standards, the Applicant shall ensure that all projects undertaken under this Agreement comply with all current codes and standards, including but not limited to local fire, building, construction, and other similar codes, consistent with 44 CFR 206.400, 206.401, and 206.402.

9. The Applicant shall comply with any mitigation requirements approved by the Division for repair or replacement projects subject to repeated damages from flooding or other hazards. (ACC R8-2-314)

10. This Agreement shall be construed in accordance with the law of the State of Arizona and applicable Federal program laws, Executive Orders, regulations, OMB Circulars, and FEMA policies and guidance, including but not limited to: 2 CFR part 200, 44 CFR Part 206, and the Robert T. Stafford Disaster Relief & Emergency Assistance Act. The Applicant shall comply with (and shall require all secondary recipients and Applicant's contractors and their subcontractors to comply with) all such State and Federal laws, regulations, rules, and requirements, whether or not expressly referenced in this Agreement. In particular, this requirement shall apply to (a) all applicable law regarding procurement of goods and services (including but not limited to ARS Title 41, Chapter 23, the Arizona Procurement Code) and to contracts for repair or restoration of eligible public facilities including but not limited to AAC Title 2, Chapter 7 (R2-7-101 *et seq.*) as well as 2 CFR 200.317, 200.322 and 200.326; and (b) all laws and policies involving the environment, including but not limited to the National Environmental Protection Act, 42 USCA 4331 *et seq.*

11. The Applicant shall comply with provisions of the Hatch Act (5 USC 7321 *et seq.*) limiting the political activities of public employees.

12. The Applicant must comply, as applicable, with provisions of the Davis-Bacon Act (40 USC 3141 *et seq.*) relating to labor standards.

13. The Applicant shall comply with applicable flood insurance purchase requirements required by the Arizona Department of Water Resources Floodplain Management Program.

14. The Applicant shall not enter into cost-plus-percentage-of-cost contracts for completion of disaster restoration or repair work. A cost-reimbursement contract may be used only if a determination is made in writing that such contract is likely to be less costly than any other type or that it is impracticable to obtain the materials, services or construction required except under such a contract (ARS 41-2544).

15. The Applicant shall not enter into contracts for professional or consultant services for which payment is contingent upon approval of project or receipt of Federal funds (2 CFR 200.459). The Applicant also shall not enter into contracts for professional or consultant services for which payment is contingent upon approval of project or receipt of State funds.

16. In accordance with AAC R8-2-313(B)(10) and 2 CFR 180.625, 180.630, and 180.925 (excepting as may comply with both 2 CFR 180.215 and applicable State law), the Applicant shall not enter into any contract with any party that is debarred or suspended from participating in State or Federal assistance programs.

17. In accordance with the provisions of 31 USC 1352 and 44 CFR Part 18, the Applicant is responsible for providing its subgrantees, contractors and subcontractors the requisite "Certification Regarding Lobbying" and "New Restriction on Lobbying" (44 CFR Part 18) for each grant. The Applicant is responsible for filing these certification and disclosure forms with the State.

18. The Applicant shall comply with the Drug Free Workplace Act of 1988 (41 USC 8101 *et seq.*) and 13 CFR Part 147, and the Applicant will provide the State a "Certification Regarding Drug-Free Workplace Requirements."

19. The Applicant is aware of and shall comply with cost-sharing requirements of Federal and State disaster assistance; specifically that Federal assistance generally is limited to 75% of eligible costs and that State assistance is absolutely limited to a maximum of 15% of eligible costs, with Applicant to contribute 10% of eligible costs, in accordance with 42 USC 5170b(b) and (c)(4); 5170c(a); 5172(b); 5173(d); and 5193(a); and AAC R8-2-312 and 313, except as otherwise provided in this Agreement, including specifically that in the event that the Applicant utilizes eligible donated resources to offset the non-Federal cost share for a project, the State share shall be maximized at 60% of the eligible project costs remaining after the Federal share and any other funding including but limited to donated resources have been taken into account. *See* 2 CFR 200.434 and 200.306.

20. Notwithstanding the provisions of ¶19 immediately above, in no circumstances will State

cost-sharing assistance exceed a maximum of 15% of total eligible costs, and in the event that the Federal cost share exceeds 75% due to specific wording within the Federal disaster declaration, or due to the Applicant opting into a FEMA program that increases the Federal cost share for all or part of a project, the State share still shall be maximized at 60% of the eligible project costs remaining after the Federal share and any other funding including but limited to donated resources have been taken into account.

21. The Applicant is aware that the funding available for Robert T. Stafford Disaster Relief and Emergency Assistance Act Section 404 (42 USC 5170c) mitigation program provides for a maximum federal share of 75% of eligible costs.

22. The Applicant shall use disaster assistance funds solely for the purposes for which these funds are provided and as approved by the GAR.

23. Per AAC R8-2-312(C), the State is not liable for any claim deemed ineligible by FEMA under a Presidential Major Disaster Declaration. Claims denied by FEMA will not be considered eligible under the corresponding State Declaration unless otherwise outlined under ACC R8-2-313(B).

24. The Applicant shall return to the Division, within two months of such request by the GAR, any partial reimbursement not supported by audit or other Division review of documentation maintained by the Applicant. (ACC R8-2-319)

25. The Applicant understands and will abide by the following deadlines:

(a) The date by which all Emergency Work (eligible work that is performed to reduce or eliminate and immediate threat to life, protect public health and safety, and to protect improved property that is threatened in a significant way as a result of the disaster) must be completed.	05/11/2023
(b) The date by which all Permanent Work (required to restore a damaged facility, through repair or restoration, to its pre-disaster design, function, and capacity in accordance with applicable codes and standards) must be completed.	N/A
(c) All damaged sites attributed to a declared disaster must be identified by the Applicant in writing(s) delivered to the Division within 60 days of the Recovery Scoping Meeting required under FEMA's procedures for federal disasters. Applicant shall be solely responsible for timely compiling and submitting its complete list of damaged sites to the Division whether or not the Division assists Applicant in compiling Applicant's list. Any damaged sites not included in Applicant's list as submitted to the Division within the 60 day period described above will not be considered for	N/A

reimbursement by the Division. All damaged sites identified by Applicant shall be submitted to the Division on a form to be supplied by the Division to the Applicant.

(d) All information required for the accurate development, review, and approval of all Projects must be provided in writing to the Division by the Applicant within 6 months from the date of the Arizona Governor's disaster declaration. Any information not provided in writing by the Applicant to the Division within that time frame will not be considered by the Division in determining eligible costs reimbursable under the declared event, with the exception (in the Division's sole determination) of information promptly provided to the Division relating to hidden damages discovered (and discoverable) only as a result of Applicant having begun work on a timely basis. 10/06/2023

26. In its sole discretion, the Division may grant time extensions for project completion due to conditions or causes which are beyond Applicant's control. Applicant must submit requests for time extensions in writing prior to the then-existing work completion deadline date. Requests must (a) demonstrate extenuating circumstances or unusual project requirements supporting the request and (b) propose a revised project completion timeline, including but not limited to a revised completion date.

27. None of the provisions of this Agreement may be waived, changed or altered except in a writing signed by authorized representatives of both parties. Not enforcing a particular provision at a particular time is not a waiver of the right to enforce that provision subsequently.

28. Pursuant to ARS 35-154, every payment obligation of the Division under this Agreement is conditioned upon the availability of funds appropriated and allocated for the payment of such obligation. If funds are not appropriated, allocated and available or if the appropriation is changed by the Legislature resulting in funds no longer being available for the continuance of this Agreement, this Agreement may be terminated by the Division at the end of the period for which funds are available. No liability shall accrue to the Division in the event this provision is exercised, and the Division shall not be obligated or liable for any future payments or for any damages as a result of termination under this paragraph.

29. The requirements of A.R.S. § 38-511 apply to this Agreement. Either party may cancel this Agreement, without penalty or further obligation, if any person significantly involved in initiating, negotiating, securing, drafting or creating this Agreement on behalf of that party is, at any time while this Agreement or any extension is in effect, an employee, agent, or consultant of the other party with respect to the subject matter of this Agreement.

30. Applicant shall comply with Arizona Executive Order 2009-9.

31. Pursuant to ARS 35-393.0.1, a public entity may not enter into a contract with a company to acquire or dispose of services, supplies, information technology or construction unless the contract includes a written certification that the company is not currently engaged in, and agrees for the duration of the contract to not engage in, a boycott of Israel. However, the parties recognize that the U.S. District Court for the District of Arizona has entered an injunction barring enforcement of this statute in *Mikkel Jordahl, et al., v. Mark Brnovich, et al.*, No. CV-17-08263-PCT-DJH, and unless and until the District Court's injunction is stayed or lifted, A.R.S. 35-393.01 is unenforceable and neither party can take any action to enforce it.

32. The parties to this Agreement agree to resolve all disputes arising out of or relating to this Agreement through arbitration, after exhausting applicable administrative review, to the extent required by ARS 12-1518, except as may be required by other applicable law. The parties agree that any litigation over this Agreement may be brought only in the Arizona Superior Court for Maricopa County.

33. Each party agrees to indemnify, defend, and hold harmless the other party from any and all claims, losses, liability, costs, or expenses, including reasonable attorney's fees, but only to the extent that such claims result in vicarious/derivative liability to the indemnitee, and are caused by the act, violation of applicable law, rule, regulation or order, omission, negligence, misconduct, or other fault of the indemnitor, its officers, officials, agents, employees, invitees, or volunteers.

34. Applicant shall submit financial status reports (SF269 or equivalent) to the Division 30 days after the end of the first Federal quarter following the initial grant award. (This initial report may be waived with the express written consent of the Division's Program Manager). The Applicant shall submit quarterly financial status reports to the Division thereafter until the grant ends. Reports are due on October 15 (for the quarter ending the prior September 30); January 15 (for the quarter ending the prior December 31); April 15 (for the quarter ending the prior March 31); and July 15 (for the quarter ending the prior June 30). Applicant shall further provide the Division with copies of all quarterly, closeout, and all other information as may be required by the Division.

35. Applicant shall submit a final financial status report, any required performance reports, a request to close the program (and any other forms and certifications requested by the Division) to the Division within 90 days of completion of grant activities.

36. Applicant shall comply with all terms and conditions of the FEMA - State Agreement dated 05/13/2020.

37. Applicant shall (i) initiate cash draw-downs only when actually needed for its disbursement; (ii) make timely financial reporting per FEMA requirements, using the SF269 or equivalent report; and (iii) impose the same standards of timing and amount upon any secondary recipient, and/or Applicant's contractors and their subcontractors.

38. Any and all cost overruns must be presented to the Division in writing and must be approved by the Division in writing as a condition of reimbursement.

39. The Applicant accepts full financial responsibility for all work and/or costs for which funding is not approved by the Division and/or FEMA.

40. This Agreement shall not be construed for or against either party regardless of which party drafted this Agreement or any portion thereof.

41. This Agreement supersedes and replaces all prior disaster assistance agreements entered into between Applicant and the State relating to 4524-DR COVID-19.

42. The file number for this Governor's Proclamation is PCA 4524-DR-AZ.

Applicant:

Rob Roach — Typed Name

Grant Program Manager — Title

_____ — Signature

_____ — Date

Division:

Gabriel Lavine
Typed Name

Director, Arizona Division of Emergency Management and Governor's Authorized Representative
Title

_____ — Signature

_____ — Date

7447954.8

RESOLUTION NO. 79-24

A RESOLUTION OF THE MAYOR AND CITY COUNCIL OF THE CITY OF BUCKEYE, ARIZONA, APPROVING THE DESIGNATION OF APPLICANT'S AUTHORIZED REPRESENTATIVE AND ALTERNATE AUTHORIZED REPRESENTATIVE FORMS SUBMISSION TO THE ARIZONA DEPARTMENT OF EMERGENCY AND MILITARY AFFAIRS, WHICH DESIGNATES THE CITY'S REPRESENTATIVES FOR APPLYING FOR CERTAIN PUBLIC ASSISTANCE; AND AUTHORIZING THE APPLICANT'S AUTHORIZED REPRESENTATIVES TO EXECUTE AND DELIVER SAID APPLICATION ON BEHALF OF THE CITY OF BUCKEYE.

BE IT RESOLVED by the Mayor and Council of the City of Buckeye, Arizona, as follows:

Section 1. The City Manager of the City of Buckeye, Dan Cotterman, is hereby designated as the Authorized Representative to execute and submit applications to the Arizona Department of Emergency and Military Affairs (DEMA) for the purpose of obtaining financial assistance under the Public Assistance program and/or other Disaster Relief Act grant programs.

Section 2. The Grant Program Manager of the City of Buckeye, Robin Roach, is hereby designated as the Alternate Authorized Representative to execute and submit applications to the Arizona Department of Emergency and Military Affairs (DEMA) for the purpose of obtaining financial assistance under the Public Assistance program and/or other Disaster Relief Act grant programs.

Section 3. The Mayor, City Manager, City Attorney, and City Clerk are hereby authorized and directed to take all steps necessary to carry out the purpose and intent of this Resolution.

PASSED AND ADOPTED by the Mayor and Council of the City of Buckeye, Arizona, this 17th day of December, 2024.

_____
Eric W. Orsborn, Mayor

ATTEST:

_____
Lucinda J. Aja, City Clerk

APPROVED AS TO FORM:

_____
K. Scott McCoy, City Attorney

CITY OF BUCKEYE
Regular Council Meeting
COUNCIL ACTION REPORT

MEETING DATE: 12/17/24	**AGENDA ITEM:** 4.R. FIN - Institute of Museum and Library Services - Museums for America Grant Application
DATE PREPARED: 12/17/24	**DISTRICT NO.:** All
STAFF LIAISON: Rob Roach, Grant Program Manager, rroach@buckeyeaz.gov, (623) 349-6165	
DEPARTMENT: Financial Services	**AGENDA ITEM TYPE:** Consent Agenda Items / New Business

ACTION/MOTION: (This language identifies the formal motion to be made by the Council)
Council to approve the submission of a $96,000 Museums for America Grant application through the Institute of Museum and Library Services for the restoration, preservation, and display of the City of Buckeye's Magistrate Book Number 1 and the original founders' bond documents. The project also includes the digitization of the restored documents, the purchase of a tamper-evident archival display case, and educational materials and exhibits.

SUMMARY

PROJECT DESCRIPTION:
The current state of the City of Buckeye's Magistrate Book Number 1 and founding bond documents are fragile and have significant damage, compromising the clarity of the information within. The City of Buckeye City Clerk's Office seeks to restore, preserve, digitize, and display these foundational City of Buckeye documents. The grant project will restore and preserve the Magistrate book and original bond documents. The project also includes the digitization of the restored documents, the purchase of a tamper-event archival display case, and educational materials and exhibits. These and other artifacts will be put on display to the general public. The preservation and display of the aforementioned artifacts safeguard Buckeye's history for future generations by placing them in a public space where they can be viewed by local students, historians, and visitors, Buckeye aims to foster a deeper connection to Buckeye's shared history. The digital images will also be available for use in local libraries and museums, further expanding the reach of these precious documents. The grant proposes to cover a two-year project period.

BENEFITS:
The objective is to safeguard critically important City of Buckeye documents and artifacts through restoring, preserving, digitizing, and displaying these items. Due to the fragility and significant damage of these crucial documents, the clarity of the information within has been compromised. If awarded, this grant will support the restoration and preservation of these documents preventing the loss of these invaluable historical records for future generations. Additionally, once restored and digitized, the City of Buckeye will display these records for public access, increasing community engagement.

FUTURE ACTION:
If awarded the Award Agreement will be presented to Council for acceptance and approval. Any additional restoration and preservation needs will come from the City Clerk's General Fund account unless additional grant funding opportunities become available in which the Grants team will pursue.

FINANCIAL IMPACT STATEMENT:
The Federal grant portion is $48,000. There is a $48,000 match required from Buckeye for this grant. Future ongoing operating and maintenance costs are anticipated to be minimal and will be funded from the Clerk's Office general budget.

CURRENT FISCAL YEAR TOTAL COST:
$0

BUDGETED:
Yes

FISCAL YEAR:
2026-2027

FUND/DEPARTMENT:
City Clerk

Items related to a project or facility location must include an attached vicinity map for Council Review.
ATTACHMENTS:
Budgetjustification.pdf
Narrative.pdf
OrganizationalProfile.pdf
Perfmeasurement.pdf
Projectstaff.pdf
Scheduleofcompletion.pdf
StrategicPlan.pdf
Budget.pdf
GRANT14302897 Grants.gov Submission Receipt 11-15-24.pdf
CAR_Recap_Summary_-_Museums_for_America_-_App.pdf

Budget Justification

Restoration of Magistrate Book No. 1. This activity includes professional restoration services to repair the binding, stabilize the pages, and address severe water damage.
Cost, as estimated by professional conservationists, is $75,000.

Restoration of Bond Documents. This includes professional restoration services for the bond documents to repair cover pages, prevent further deterioration, Mylar encasing each page, and preserve historical integrity.
Cost, as estimated by professional conservationists, is $8,500.

Archival Display Cabinet (for both documents and other historical artifacts). This includes Archival-quality display case purchase for safe, visible, and accessible exhibition in the City Hall.
Cost is estimated at $5,000.

Digital Imaging and Archiving.
This includes high-resolution scanning and digitization of both documents to create digital access via tablets or iPads.
Cost is estimated at $4,500.

Educational Outreach Materials. This includes creation of educational materials, including informative placards or brochures for display, and digital content for outreach.
Cost is estimated at $1,500.

Collaboration with Local Museum for City Birthday Exhibit. This includes costs for developing a temporary exhibit, including curatorial fees, setup, and display materials for the City's birthday celebrations.
Cost is estimated at $1,500.

Narrative

Project Justification

The history of Buckeye's community is not only etched in the buildings and streets that line downtown Buckeye but also in the documents that chronicle the events, struggles, and triumphs of its early inhabitants. Among the most significant of these records are Magistrate Book No. 1 and a set of bond documents, both of which offer invaluable insight into the formation of the town and its journey towards becoming the City of Buckeye today. The aforementioned items are not just historical artifacts; they are the very foundation of Buckeye's narrative, capturing moments in time that shaped the lives of Buckeye's founding families.

Historical documents and artifacts are a window into the early life of a community. Magistrate Book No. 1 is a document of extraordinary historical significance, holding the records of the town's early legal matters. The book is a living testament to the individuals who helped form the Buckeye community, containing the names of founding families, the reasons they found themselves before the magistrate, their goings-on, their trials and tribulations, associated fines and sentences, and even the names of those who managed to escape justice. These early legal records provide a unique glimpse into the societal norms and challenges of the 1930s, offering a compelling story of the town's formative years.

Unfortunately, the condition of Magistrate Book No. 1 is fragile. The cover page is damaged, and the original binding has deteriorated over time. There are significant holes in the material, and many of the inside pages have suffered from water damage, compromising the clarity of the information within. Without proper restoration, this invaluable historical record could be lost to future generations.

Equally important are the bond documents that trace the financial contributions of Buckeye's founding families and the funding that put Buckeye on the map. The initial bond funding was used to develop the main street that runs through the downtown area. This main thoroughfare, which still serves as the heart of the city today, was once a symbol of the community's collective investment in its future. The bond records showcase how these families came together to fund the infrastructure that would allow the town to grow and thrive.
Like the Magistrate Book, the bond book is in dire need of preservation. The cover pages have suffered significant damage, with the edges torn and the paper itself beginning to separate. The historical value of this document is immense, as it represents both the economic foundations of the town and the continued involvement of the founding families in shaping its destiny.

By the preservation and display of the historical documents the City of Buckeye ensures the safeguarding of these documents and history for future generations. Both the Magistrate Book No. 1 and the bond documents are essential pieces of the town's history. However, the current state of these records makes them difficult, if not impossible, to display and share with the public. The Clerk's office lacks the appropriate resources to properly store and protect these fragile documents from further deterioration. Without intervention, these records may be lost forever. The restoration of these records is not merely an investment in preserving paper and ink but in safeguarding the stories of the people who built the community. These documents tell the

story of who the community was, how the community came to be, and how the sacrifices of those who came before shaped the present and future of the town. The preservation of Magistrate Book No. 1 and the bond documents will ensure that the history of the community is not forgotten, but is passed down to future generations, enriching their understanding of the shared past. Buckeye is committed to maintaining the integrity of these important historical records, and with this grant support, Buckeye can ensure that these pieces of history remain accessible, safe, and well-preserved for the enjoyment and education of generations to come.

Project Work Plan

Buckeye is seeking funding for the restoration, display, and exhibition of both the Magistrate Book No. 1 and the bond documents. The goal is not only to preserve these critical records but also to make them accessible to the public in a manner that ensures their long-term protection. The City of Buckeye plan includes:

1. Restoration: Professional conservationists will address the physical damage to the Magistrate Book No. 1 and the bond documents. This will involve repairing the covers, stabilizing the pages, and preventing further water damage. The goal is to restore these documents to a state that will allow them to be safely handled and displayed for generations to come.

2. Archival Display and Digital Access: Once restored, the documents will be displayed in a tamper-evident, archival-quality display case in the City of Buckeye City Hall building. This will allow the public to view these historical records in a safe and controlled environment. Accompanying the physical display will be digital images of the contents of the books, accessible through a tablet or iPad. These images will allow visitors to browse through the records digitally, offering a deeper understanding of the names, stories, and events captured within these books. Once Magistrate Book No. 1 and the bond documents have been restored and conserved, they will be stored in a secure storage room when not on display at City Hall. The storage room is a secure area accessible only to City Clerk staff.

3. Educational Outreach and Public Engagement: The restored Magistrate Book No. 1 and bond documents will serve as a unique educational tool for future generations. By placing them in a public space where they can be viewed by local students, historians, citizens, and visitors, Buckeye aims to foster a deeper connection to the City of Buckeye shared history. The digital images will also be available for use to local libraries and museums, further expanding the reach of these precious documents.

4. City Birthday Collaboration: To further engage the community, Buckeye also plans to coordinate the display with the local Buckeye Valley Museum for the City’s birthday celebrations. This will be a perfect opportunity to showcase these important records as part of a larger initiative to celebrate the City of Buckeye’s history and heritage. A special exhibit could be created, offering both locals and visitors an opportunity to reflect on how the early legal and financial foundations of the community were shaped. This would be a unique, timely addition to the City's birthday festivities, enhancing public awareness and pride in the community’s shared past.

The main risk to this project is the preservation of the historic documents. If the documents deteriorate during the restoration process, the ability to restore all of the documents could be jeopardized. The documents have already gone through a preliminary restoration and have survived the process. Buckeye has consulted with professional document conservationists and believes that the process may be able to proceed with further restoration. However, a further and final assessment of the documents' physical condition will ascertain a go- or no-go milestone in the project. An additional and final go- or no-go milestone would be if during the restoration process the document or documents deteriorate beyond restoration success.

The project will be planned, implemented, and managed by Liz Camacho, Clerk Supervisor, a 10+ year veteran in local history research, education, public outreach, and archival management, as well as significant experience in the digital archiving and cataloging of historical documents, and management and preservation of critical historical records to ensure long-term accessibility and integrity. Liz will be aided by Kaitlyn Reeves, a records specialist in records management and digital imaging of records. Rob Roach will serve as the Project Director and is the City of Buckeye's Grant Program Manager. Mr. Roach will manage grant expenditures, grant reporting, and all other grant management activities. Rob has 10+ years of successful grant management with two different municipalities.

Buckeye anticipates that this entire project will take about 24 months to complete. The financial commitment approximates $96,000. Buckeye is requesting 50% or $48,000 from grant funding and 50% or $48,000 funded from the City of Buckeye. Please see the IMLS budget form for details. Buckeye will provide operating personnel resources and operating resources and supplies as required. The museum will be sustained by the City of Buckeye after the completion of this project and the expiration of the grant period of performance.

Buckeye will keep records of the restoration and preservation process and success as provided by the professional conservationist. Buckeye will also collect and maintain records of the number of attendees to the exhibit, detailed expenditures, social media and public engagement, and special events. Buckeye will measure progress and results through these records.

Project Results

The intended project results are multi-fold:

- Successful restoration of the historical documents
- Purchase of an archival display cabinet
- Digital imaging and archiving of the historical documents
- Creation of educational outreach materials
- Exhibition of the display within Buckeye City Hall
- Collaboration with Buckeye Valley Museum for the City birthday exhibition

The project results will be accomplished through the execution of the aforementioned project work plan. It is intended that the museum and exhibit audience will receive a greater knowledge of the community and the community history. This knowledge has the potential to instill a

greater sense of community and belonging to the community. This greater sense of community spirit can create a safer and more productive community through heightened cooperation and collaboration. Additionally, the public may develop a better appreciation for modern day conveniences when learning of the past struggles and sacrifices of the community predecessors. These historic documents may also be a resource for students and historians.

Success will be measured first by the successful completion of the restoration and installation of the public display. Secondly, visitor attendance and interaction with digital tools and content will be measured to indicate the level of community engagement. This can be measured by attendee questionnaires and information capture within the digital tools.

The project aims to safeguard the documents for future generations, provide long-term accessibility to the exhibit, foster a deeper connection to the town's origins, and ensure these critical records remain publicly accessible and preserved. Buckeye plans to utilize social media, the City website, and utility bill mailers to promote the museum, announce the exhibits, and share interesting information and results to the public.

These documents tell the story of who the community was, how the community came to be, and how the sacrifices of those who came before shaped the present and future of the town. The preservation of Magistrate Book No. 1 and the bond documents will ensure that the history of the community is not forgotten, but is passed down to future generations, enriching their understanding of the shared past. Buckeye is committed to maintaining the integrity of these important historical records, and with this grant support, Buckeye can ensure that these pieces of history remain accessible, safe, and well-preserved for the enjoyment and education of generations to come.

Once restored, the documents will be displayed in a tamper-evident, archival-quality display case in the City of Buckeye City Hall building. This will allow the public to view these historical records in a safe and controlled environment. Accompanying the physical display will be digital images of the contents of the books, accessible through a tablet or iPad. These images will allow visitors to browse through the records digitally, offering a deeper understanding of the names, stories, and events captured within these books.

The beneficiaries of this project will be the citizens and visitors of the City of Buckeye. These efforts will serve the public through a new museum venue, with restored, preserved, and exhibited historical documents and artifacts that are new to the public. This new museum venue is organized on a permanent basis, open over 120 days per year to the public and provides on-going, essential cultural heritage and educational benefits to the community. These objects will be exhibited to the general public on a regular basis through facilities that the City of Buckeye owns and operates. The City of Buckeye will continue to support the operation of this museum exhibit beyond the conclusion of the period of performance of this grant.

Organizational Profile

The City of Buckeye's mission statement is “to provide exceptional services for a safe, thriving community, while honoring our history and innovating for the future”. Buckeye “aspires to be the community of limitless possibilities”. Buckeye stated values are “embrace the new, do right, lend a hand, find a way, enjoy our work, and celebrate uniqueness”. The City Council of Buckeye as well as the leadership staff of the City have developed and approved the foregoing. The City has posted its mission statement, aspirations, and values in numerous public communications. Buckeye is a city that is governed by a 7-member council elected by the citizens of Buckeye and made up of a mayor and six council members that represent the six districts of Buckeye.

The area today known as the City of Buckeye (“City” or “Buckeye”) was originally inhabited by the Hohokam civilization between the years of 200 and 1450. The Hohokam are thought to have abandoned the area due to an extensive drought with an estimated duration from 1276 to 1299, followed by continued infrequent rainfall up until 1450. The first current day settlement was established in 1885, by a group looking to develop an irrigation ditch. In 1922, the Buckeye Water Conservation and Drainage District was established, and the 28-mile canal is still operating to this day. Buckeye is located 40 miles west of Phoenix and consists of 640 square miles. Buckeye is one of the fastest growing cities in the United States and is home to approximately 114,000 people. Buckeye is only 15% built out and is estimated to have a population of 295,400 people by 2040, according to the Maricopa Association of Governments (MAG) https://www.growbuckeye.com/pages/choose-buckeye. According to the Climate and Economic Justice Screening Tool (CEJST), Buckeye has three census tracts that are Federally designated as Historically Disadvantaged Communities, home to approximately 21,000 people (census tracts 4013050607, 4013050701, 4013050702) Explore the map - Climate & Economic Justice Screening Tool. The Buckeye Museum is located in downtown and is one of these disadvantaged, low-income neighborhoods. According to the USDOT Equitable Transportation Community Explorer mapping tool, downtown Buckeye has a population of 11,600 and 100% is determined as disadvantaged with 38% to 50% of the population in the 2 tracts (507.01 and 507.02) at or below 200% of the federal poverty line. The downtown neighborhoods are 64% people of color population and historically underserved.

The focus of this grant request is the Buckeye City Clerk’s Office. The Office of the City Clerk serves as the historian of the city and as a direct link between residents of Buckeye and local government. The City Clerk’s Office is the custodian of numerous historic documents, artifacts, and historic items that link to the heritage of the City of Buckeye.

The City Clerk’s Office desires to create a small, informal museum setting in City Hall. City Clerk’s Office looks to display its Magistrate Book No. 1, bond documents, and other historical items. Buckeye is seeking funding to restore and preserve the Magistrate Book and Bond documents, purchase an archival display cabinet, create high-resolution digitization of the documents, create educational outreach materials, and costs for the Buckeye City birthday exhibit display. The museum display will be open at least 120 days a year to the public.

Applicant Name: City of Buckeye
Project Title: Buckeye Restoration, Preservation, and Display of Historical Documents

Performance Measure	**Data We Will Collect** Attendance of museum exhibit will be collected. Opinions and comments will be collected from museum exhibit attendees.	**Source of Our Data** Data and comments will be collected from attendees, stakeholders, and staff.	**Method We Will Use** Surveys, questionnaires, informal discussions, observations, and document analysis.	**Schedule** Quarterly and at the end.
Effectiveness: The extent to which activities contribute to achieving the intended results	*At the end of each month, using a report prepared from the attendance records, we will compare the monthly and cumulative count of attendees for growth, trends, and eventually against prior year numbers.*			
Efficiency: How well resources (e.g., funds, expertise, time) are used and costs are minimized while generating maximum value for the target group	*Each quarter, we will assess our expenditures for the program and compare to the budget and make any required adjustments.*			
Quality: How well the activities meet the requirements and expectations of the target group	*We will gather opinions about our museum display through questionnaires provided to attendees.*			
Timeliness: The extent to which each task/activity is completed within the proposed timeframe	*Each quarter, we will assess the proposed schedule of completion to the actual progress and activity completion.*			

List of Key Project Staff and Consultants

Rob Roach will serve as the Project Director and is the City of Buckeye's Grant Program Manager. Mr. Roach will manage grant expenditures, grant reporting, and all other grant management activities. Rob has 10+ years of successful grant management with two different municipalities.

The project will be planned, implemented, and managed by Liz Camacho, Clerk Supervisor, a 10+ year veteran in local history research, education, public outreach, and archival management, as well as significant experience in the digital archiving and cataloging of historical documents, and management and preservation of critical historical records to ensure long-term accessibility and integrity.

Liz will be aided by Kaitlyn Reeves, a records specialist in records management and digital imaging of records.

Schedule of Completion

Schedule of Completion – Year 1	
Activity	**Months from Fully Executed Grant Agreement**
Secure any necessary authorizations, consultation and planning for vendor selection.	1-4
Vendor selection for document restoration.	4-6
Document restoration.	6-12

Schedule of Completion – Year 2	
Activity	**Months from Fully Executed Grant Agreement**
Procurement of archival display case.	12-14
Digitization and digital archiving and creation of educational materials.	14-17
Collaboration with local museum for City birthday/anniversary exhibit.	17-19
Final review, public unveiling, and ongoing maintenance.	19-24

Strategic Plan Summary

The City of Buckeye conducted an employee and community survey in 2022 to obtain feedback on what Buckeye residents and employees need and expect, to ensure that Buckeye is providing outstanding services, as well as attracting the best talent. The survey results served as the foundation for Buckeye's Strategic Plan, which was adopted by Buckeye's City Council in 2022 and revised in 2023. The revised 2023 Strategic Plan encompasses fiscal years 2024 through 2027 and has not experienced any additional revisions. The City of Buckeye's Strategic Plan focuses on the following:

- **Fiscal responsibility**: Implementing robust financial strategies to ensure stability and resilience in fiscal matters.
- **Economic growth**: Cultivating an environment conducive to sustainable economic development and prosperity.
- **Innovative and High-Performing Organization**: Fostering a culture of innovation and efficiency within city operations to better serve Buckeye.
- **A Safe and Sustainable Quality of Life**: Prioritizing the well-being of residents by enhancing safety measures and promoting sustainability initiatives.
- **Infrastructure**: Investing in and maintaining critical infrastructure to support the city's growth and development.

The proposed project to preserve and display historical artifacts advances the Innovative and High-Performing Organization strategy which fosters a culture of innovation and efficiency to better serve Buckeye. One the components of the Buckeye mission statement is to honor our history. This project also helps to sustain a quality of life wherein residents will have access to a new cultural and historical venue. The preservation and display of historical documents and artifacts honors the history of Buckeye. This project also celebrates the uniqueness and events that made the City of Buckeye what it has become. The history of the community documents and chronicles the events, struggles, and triumphs of Buckeye's early inhabitants. Among the most significant of these records are the Magistrate Book No. 1 and a set of bond documents, both of which have an invaluable insight into the formation of Buckeye and its journey towards becoming the city as it is today. These items are not just historical artifacts; they are the very foundation of Buckeye's narrative, capturing moments in time that shaped the lives of the founding families.

Magistrate Book No. 1 is a document of extraordinary historical significance, holding the records of the town's early legal matters. The book is a living testament to the individuals who helped form this community, containing the names of founding families, the reasons they found themselves before the magistrate, their associated fines and sentences, and even the names of those who managed to escape justice. These early legal records provide a unique glimpse into the societal norms and challenges of the 1930s, offering a compelling story of the town's formative years.

Equally important are the bond documents that trace the financial contributions of the founding families to the development of the main street that runs through the downtown area. This main thoroughfare, which still serves as the heart of the city today, was once a symbol of the

community’s collective investment in its future. The bond records showcase how these families came together to fund the infrastructure that would allow the town to grow and thrive.

The preservation and display of the Magistrate Book No. 1, the bond documents, and other historic documents and artifacts safeguard the Buckeye history for future generations. These documents and artifacts are essential pieces of the town’s history.

The documents will be displayed in a tamper-evident, archival-quality display case in the City Hall. This will allow the public to view these historical records in a safe and controlled environment. Accompanying the physical display will be digital images of the contents of the books, accessible through a tablet or iPad. These images will allow visitors to browse through the records digitally, offering a deeper understanding of the names, stories, and events captured within these books.

The restored Magistrate Book No. 1 and bond documents will serve as a unique educational tool for future generations. By placing them in a public space where they can be viewed by local students, historians, and visitors, we aim to foster a deeper connection to Buckeye’s shared history. The digital images will also be available for use in local libraries and museums, further expanding the reach of these precious documents.

To further engage the community, we will coordinate the display with the local museum for the City’s birthday celebrations. This would be a perfect opportunity to showcase these important records as part of a larger initiative to celebrate the city's history and heritage. A special exhibit would be created, providing both locals and visitors an opportunity to reflect on how the early legal and financial foundations of the community shaped the city that Buckeye is today. This would be a unique, timely addition to the City's birthday festivities, enhancing public awareness and pride in the shared past.

IMLS BUDGET FORM

a. Legal name (5a from SF-424S): City of Buckeye

b. Requested Grant Period From: (MM/DD/YYYY) 09/01/2025 Through: (MM/DD/YYYY) 08/31/2027

c. If this is a revised budget, indicate application/grant number:

1. Salaries and Wages

Name/Title or Position	Year 1		Year 2		Year 3		Total		
	Grant Fund	Cost Share	Grant Fund	Cost Share	Grant Fund	Cost Share	Grant Fund	Cost Share	Grand Total
Subtotal									

2. Fringe Benefits

Rate and Base	Year 1		Year 2		Year 3		Total		
	Grant Fund	Cost Share	Grant Fund	Cost Share	Grant Fund	Cost Share	Grant Fund	Cost Share	Grand Total
Subtotal									

Control #: 3137-0092, Expiration Date: 5/31/2026

IMLS BUDGET FORM

a. Legal name (5a from SF-424S): City of Buckeye

3. Travel

From/To and Purpose	Year 1		Year 2		Year 3		Total		
	Grant Fund	Cost Share	Grant Fund	Cost Share	Grant Fund	Cost Share	Grant Fund	Cost Share	Grand Total
Subtotal									

4. Supplies, Materials, and Equipment

Item	Year 1		Year 2		Year 3		Total		
	Grant Fund	Cost Share	Grant Fund	Cost Share	Grant Fund	Cost Share	Grant Fund	Cost Share	Grand Total
Archival Display			$2,500.00	$2,500.00			$2,500.00	$2,500.00	$5,000.00
Educational materials			$750.00	$750.00			$750.00	$750.00	$1,500.00
Display materials			$750.00	$750.00			$750.00	$750.00	$1,500.00
Subtotal			$4,000.00	$4,000.00			$4,000.00	$4,000.00	$8,000.00

5. Subawards and Contracts

Item		Year 1		Year 2		Year 3		Total		
		Grant Fund	Cost Share	Grant Fund	Cost Share	Grant Fund	Cost Share	Grant Fund	Cost Share	Grand Total
Magistrate Book R	Contract	$37,500.00	$37,500.00					$37,500.00	$37,500.00	$75,000.00
Bond documents r	Contract	$4,250.00	$4,250.00					$4,250.00	$4,250.00	$8,500.00
Digital Imaging	Contract	$2,250.00	$2,250.00					$2,250.00	$2,250.00	$4,500.00
	Contract									
	Contract									
	Contract									
	Contract									
Subtotal		$44,000.00	$44,000.00					$44,000.00	$44,000.00	$88,000.00

3 Control #: 3137-0092, Expiration Date: 5/31/2026

IMLS BUDGET FORM

a. Legal name (5a from SF-424S): City of Buckeye

6. Student Support

Item	Year 1		Year 2		Year 3		Total		
	Grant Fund	Cost Share	Grant Fund	Cost Share	Grant Fund	Cost Share	Grant Fund	Cost Share	Grand Total
Subtotal									

7. Other Costs

Item	Year 1		Year 2		Year 3		Total		
	Grant Fund	Cost Share	Grant Fund	Cost Share	Grant Fund	Cost Share	Grant Fund	Cost Share	Grand Total
Subtotal									

8. Total Direct Costs

	Year 1		Year 2		Year 3		Total		
	Grant Fund	Cost Share	Grant Fund	Cost Share	Grant Fund	Cost Share	Grant Fund	Cost Share	Grand Total
Subtotals (Items 1-7)	$44,000.00	$44,000.00	$4,000.00	$4,000.00			$48,000.00	$48,000.00	$96,000.00

Control #: 3137-0092, Expiration Date: 5/31/2026

IMLS BUDGET FORM

a. Legal name (5a from SF-424S): City of Buckeye

9. Indirect Costs (Read the instructions about Indirect Costs before completing this section.)

- ○ Current indirect cost rate(s) have been negotiated with a federal agency. Name of Agency: _____ Expiration Date: _____
- ○ Indirect cost proposal has been submitted to a federal agency but not yet finalized. Name of Agency: _____ Proposal Date: _____
- ○ Applicant chooses a rate not to exceed 15% of modified total direct costs, and declares it is eligible for the 15% rate. Until Amended: ☐
- ◉ Applicant chooses not to include indirect costs.
- ○ Grant program does not allow indirect costs.

Rate and Base	Year 1		Year 2		Year 3		Total		
	Grant Fund	Cost Share	Grant Fund	Cost Share	Grant Fund	Cost Share	Grant Fund	Cost Share	Grand Total
Indirect Costs Subtotal									

10. Total Project Costs

	Year 1		Year 2		Year 3		Total		
	Grant Fund	Cost Share	Grant Fund	Cost Share	Grant Fund	Cost Share	Grant Fund	Cost Share	Grand Total
Total Direct & Indirect Costs	$44,000.00	$44,000.00	$4,000.00	$4,000.00			$48,000.00	$48,000.00	$96,000.00
Total Costs (excluding student support)	$44,000.00	$44,000.00	$4,000.00	$4,000.00			$48,000.00	$48,000.00	$96,000.00

Control #: 3137-0092, Expiration Date: 5/31/2026

From: do_not_reply@grants.gov
To: [Rob Roach]
Cc: [Courtney Gaines]
Subject: GRANT14302897 Grants.gov Submission Receipt
Date: Friday, November 15, 2024 12:06:39 PM

[NOTICE: This message originated outside of the City of Buckeye -- DO NOT CLICK on links or open attachments unless you are sure the content is safe.]

Your application has been received by Grants.gov, and is currently being validated.
Your submission was received at Nov 15, 2024 02:06:24 PM EST

Validation may take up to 2 business days. To check the status of your application please click here https://gcc02.safelinks.protection.outlook.com/?url=https%3A%2F%2Fwww.grants.gov%2Fapplicant%2Fgrant-applications%2Ftrack-my-application%3Ftracking_num%3DGRANT14302897&data=05%7C02%7Crroach%40buckeyeaz.gov%7C3cb54d308dce43429d3b08dd85a89a30%7Cd0733dfe5ba645c79384d7fc46c1f56c%7C0%7C0%7C638672943893107073%7CUnknown%7CTWFpbGZsb3dfby0fWUdIYiOiIwLjAuMDAwMCIsIlAiOiJXaW4zMiIsIkFOIjoiTWFpbCIsIlUjoifQ%3D%3D%7C0%7C%7C%7C&sdata=5sPwjVjcp9wrIzF0waxEUCWLvvzFDuKS19jSG52Bh6kYBDw%3D&reserved=0

Type: GRANT

Grants.gov Tracking Number: GRANT14302897

We will notify you via email when your application has been validated by Grants.gov and is being prepared for Grantor agency retrieval.
UEI: WYHKEKNHLA38

AOR name: Rob Roach

Application Name: Buckeye Restoration, Preservation, and Display of Historical Documents

Opportunity Number: MFA-FY25

Opportunity Name: Museums for America (2025)

https://gcc02.safelinks.protection.outlook.com/?
url=https%3A%2F%2Fapply07.grants.gov%2Fapply%2Flogin.faces%3FcleanSession%3D1&data=05%7C02%7Crroach%40buckeyeaz.gov%7C3cb54d308dce43429d3b08dd85a89a30%7Cd0733dfe5ba645c79384d7fc46c1f56c%7C0%7C0%7C638672943893047161%7CUnknown%7CTWFpbGZsb3dfby0fWUdIYiOiIwLjAuMDAwMCIsIlAiOiJXaW4zMiIsIkFOIjoiTWFpbCIsIlUjoifQ%3D%3D%7C0%7C%7C%7C&sdata=HNWutvh4q1LIUyURTdbAC1fvQkCbudo6DDXh%2FZXYQ%2Bpp8%3D&reserved=0

Thank you.
Grants.gov
If you have questions please contact the Grants.gov Contact Center:
support@grants.gov
1-800-518-4726
24 hours a day, 7 days a week. Closed on federal holidays.

PLEASE NOTE: This email is for notification purposes only. Please do not reply to this email for any purpose.

Institute of Museum and Library Services – Museums for America Grant Application Summary Recap

Project Description:



The City of Buckeye City Clerk's Office seeks to restore, preserve, and display Magistrate Book Number 1, bond documents, and other historical items. The grant covers a 3-year period.

Project Cost



- $ 48,000 ($48,000 Reimbursable based on budget)

Required Match



- $ 48,000

Grant Amount



- $ 48,000

Plans Once Grant Expires:



- If awarded, the Award Agreement will be presented to Council for acceptance and approval. Any additional restoration and preservation needs will come from the City Clerk's Office's General Fund account unless additional grant funding opportunities become available in which the Grants team will pursue.

Objectives and Expected Outcomes



- The objective is to safeguard critically important City of Buckeye documents and artifacts through restoring, preserving, digitizing, and displaying these items. Due to the fragility and significant damage of these crucial documents, the clarity of the information within has been compromised. If awarded, this grant will support the restoration and preservation of these documents preventing the loss of these invaluable historical records for future generations. Additionally, once restored and digitized, the City of Buckeye will display these records for public access, increasing community engagement.

Time Period for the Grant



- FY 2026 - FY 2027

CITY OF BUCKEYE
Regular Council Meeting
COUNCIL ACTION REPORT

MEETING DATE: 12/17/24	**AGENDA ITEM:** 4.S. FIN - US Department of Justice - 2024 Body-Worn Camera Policy and Implementation Program - Grant Award
DATE PREPARED: 12/17/24	**DISTRICT NO.:** All
STAFF LIAISON: Rob Roach, Grant Program Manager, rroach@buckeyeaz.gov, (623) 349-6165	
DEPARTMENT: Financial Services	**AGENDA ITEM TYPE:** Consent Agenda Items / New Business

ACTION/MOTION: (This language identifies the formal motion to be made by the Council)
Council to take action on the approval, acceptance, and execution of Grant Award Number 15PBJA-24-GG-04436-BWCX, from the US Department of Justice, Office of Justice, Bureau of Justice Assistance Fiscal Year 24 Body-Worn Camera Policy and Implementation Program to Support Law Enforcement Agencies, in the amount of $200,000, to support the replacement and expansion of 200 new Body-Worn Cameras (BWCs) over a 36-month period, 200 Auto-Transcribe service licenses for 36 months, and 200 Redaction Assistant licenses for 36 months; to authorize the City Manager to execute and deliver the Grant Award; and to authorize the Mayor, City Manager, City Attorney, and City Clerk to take all steps necessary to carry out the purpose and intent of the Grant Award.

SUMMARY

PROJECT DESCRIPTION:
The City of Buckeye Council previously approved the submission of a grant application, which has been subsequently awarded by the US Department of Justice. The 2024 Body-Worn Camera Policy and Implementation Program award is for the Buckeye Police Department to obtain new body-worn cameras to upgrade and replace current body-worn cameras as they are nearing the end of their useful life and are not equipped to meet today's needs. The new body-worn cameras awarded through this grant are equipped with state-of-the-art technology to meet today's needs and improved battery capacity to increase reliability. The grant also supports an Auto-Transcribe Service which will aid in officers' report writing to save time and increase accuracy. Lastly, the grant award supports the Redaction Assistant Service to aid in body-worn camera footage redaction to improve accuracy and timeliness in providing requested footage. The grant covers a three-year period (36 months).

BENEFITS:
The objective is to support Buckeye Police Department's body-worn camera program by enhancing body-worn camera reliability and capability through new body-worn cameras to replace and upgrade the current body-worn cameras that are nearing the end of their useful life and are becoming increasingly unreliable due to battery and charging issues and the current body-worn cameras are not equipped to meet today's needs. The body-worn camera program is an existing Buckeye Police Department program that is essentially a mandatory program in today's environment. The current body-worn camera contract expires July 15, 2025. This grant will help Buckeye to enter into the next required body-worn camera contract. This should satisfy body-worn camera anticipated needs for the next three years.

FUTURE ACTION:
Any additional body-worn camera needs will come from the Buckeye Police Department's General Fund account unless additional grant funding opportunities become available, in which the Grants team will pursue. No future maintenance costs are expected due to warranty provisions in the provider contract.

FINANCIAL IMPACT STATEMENT:
The federal grant portion is $200,000. There is a $200,000 match required from Buckeye for this grant, which will be funded from the Police Department general fund budget. The body-worn camera contract will include a warranty, therefore, there is no anticipated maintenance cost.

CURRENT FISCAL YEAR TOTAL COST:
$0

BUDGETED:
Yes

FISCAL YEAR:
2026- 2028

FUND/DEPARTMENT:
Police

Items related to a project or facility location must include an attached vicinity map for Council Review.
ATTACHMENTS:
Award_Package_FAW-186288 BWC 11-15-24 award 15PBJA-24-GG-04436-BWCX.pdf
CAR Recap Summary - BWC - Awarded.docx

Department of Justice (DOJ)

Office of Justice Programs

Bureau of Justice Assistance

Washington, D.C. 20531

Name and Address of Recipient:	CITY OF BUCKEYE 530 E MONROE AVE
City, State and Zip:	BUCKEYE, AZ 85326
Recipient UEI:	WYJHKKNHLA38
Project Title: City of Buckeye Police Department New and Upgraded Body-Worn Camera Grant to Ensure Officer Accountability and Transparency.	**Award Number:** 15PBJA-24-GG-04436-BWCX
Solicitation Title: BJA FY24 Body-Worn Camera Policy and Implementation Program to Support Law Enforcement Agencies	
Federal Award Amount: $200,000.00	**Federal Award Date:** 11/15/24
Awarding Agency:	Office of Justice Programs Bureau of Justice Assistance
Funding Instrument Type:	Grant
Opportunity Category: D **Assistance Listing:** 16.835 - Body Worn Camera Policy and Implementation	
Project Period Start Date: 10/1/24	**Project Period End Date:** 9/30/27
Budget Period Start Date: 10/1/24	**Budget Period End Date**: 9/30/27

Project Description:

The City of Buckeye spans 640 square miles and has a population of approximately 114,000 people. Approximately 20,000 of the population reside within a federally designated disadvantaged community within Buckeye. Buckeye is one of the fastest growing cities in the country. Buckeye is only 15% built out and is estimated to have a population of 295,400 people by 2040, according to the Maricopa Association of Governments (MAG) https://www.growbuckeye.com/pages/choose-buckeye. Buckeye Police Department (BPD) saw a 21.5% increase in calls for service from 2021 (43,343) to 2023 (52,665) 638472307122000000 (buckeyeaz.gov). This increase in calls for service is projected to continually increase as the City's population continues to grow. BPD currently has 180 total personnel and a shortage of sworn officers. This requires BPD to evaluate ways to ensure that their officers' time is being utilized efficiently. BPD currently employs a community policing model wherein officers are active within the community. BPD is operating with obsolete Body Worn Camera (BWC) technologies that are inefficient which contributes to extended time spent on writing reports by

BPD officers; time that could be utilized aiding more citizens who request BPD's assistance. This grant project seeks to enhance and support BPD's goal of a culture of accountability and performance, provide transparency within the community, and provide accurate records of law enforcement related interactions to protect parties from false allegations.

BPD seeks to resolve the inefficiencies through the expansion and upgrade of their current BWCs that are obsolete and reaching the end of their useful life. The 200 upgraded BWCs requested have a greater battery capacity of 13 hours to ensure that events are recorded without worry of the BWC dying. The new BWCs also have bi-directional communications capabilities between multiple viewers and the wearer, to allow real-time communication, real-time location access to remote viewers, 160-degree field of view visibility, clearer and more detailed recordings, and the ability to connect to an additional point-of-view camera that can be utilized on the officer's glasses, hat, shoulder, or head.

Award Letter

November 15, 2024

Dear Rob Roach,

On behalf of Attorney General Merrick B. Garland, it is my pleasure to inform you the Office of Justice Programs (OJP) has approved the application submitted by CITY OF BUCKEYE for an award under the funding opportunity entitled 2024 BJA FY24 Body-Worn Camera Policy and Implementation Program to Support Law Enforcement Agencies. The approved award amount is $200,000.
Review the Award Instrument below carefully and familiarize yourself with all conditions and requirements before accepting your award. The Award Instrument includes the Award Offer (Award Information, Project Information, Financial Information, and Award Conditions) and Award Acceptance. For COPS Office and OVW funding the Award Offer also includes any Other Award Documents.

Please note that award requirements include not only the conditions and limitations set forth in the Award Offer, but also compliance with assurances and certifications that relate to conduct during the period of performance for the award. These requirements encompass financial, administrative, and programmatic matters, as well as other important matters (e.g., specific restrictions on use of funds). Therefore, all key staff should receive the award conditions, the assurances and certifications, and the application as approved by OJP, so that they understand the award requirements. Information on all pertinent award requirements also must be provided to any subrecipient of the award.

Should you accept the award and then fail to comply with an award requirement, DOJ will pursue appropriate remedies for non-compliance, which may include termination of the award and/or a requirement to repay award funds.

Prior to accepting the award, your Entity Administrator must assign a Financial Manager, Grant Award Administrator, and Authorized Representative(s) in the Justice Grants System (JustGrants). The Entity Administrator will need to ensure the assigned Authorized Representative(s) is current and has the legal authority to accept awards and bind the entity to the award terms and conditions. To accept the award, the Authorized Representative(s) must accept all parts of the Award Offer in the Justice Grants System (JustGrants), including by executing the required declaration and certification, within 45 days from the award date.

To access your funds, you will need to enroll in the Automated Standard Application for Payments (ASAP) system, if you haven’t already completed the enrollment process in ASAP. The Entity Administrator should have already received an email from ASAP to initiate this process.

Congratulations, and we look forward to working with you.

Brent J. Cohen
Acting Assistant Attorney General

Office for Civil Rights Notice for All Recipients

The Office for Civil Rights (OCR), Office of Justice Programs (OJP), U.S. Department of Justice (DOJ) enforces federal civil rights laws and other provisions that prohibit discrimination by recipients of federal financial assistance from OJP, the Office of Community Oriented Policing Services (COPS), and the Office on Violence Against Women (OVW).

Several civil rights laws, including Title VI of the Civil Rights Act of 1964 and Section 504 of the Rehabilitation Act of 1973, require recipients of federal financial assistance (recipients) to give assurances that they will comply with those laws. Taken together, these and other civil rights laws prohibit recipients from discriminating in the provision of services and employment because of race, color, national origin, religion, disability, and sex or from discriminating in the provision of services on the bases of age.

Some recipients of DOJ financial assistance have additional obligations to comply with other applicable nondiscrimination provisions like the Omnibus Crime Control and Safe Streets Act of 1968, which prohibits discrimination on the basis of religion in addition to race, color, national origin, and sex. Recipients may also have related requirements regarding the development and implementation of equal employment opportunity programs.

OCR provides technical assistance, training, and other resources to help recipients comply with civil rights obligations. Further, OCR administratively enforces civil rights laws and nondiscrimination provisions by investigating DOJ recipients that are the subject of discrimination complaints. In addition, OCR conducts compliance reviews of DOJ recipients based on regulatory criteria. These investigations and compliance reviews permit OCR to evaluate whether DOJ recipients are providing services to the public and engaging in employment practices in a nondiscriminatory manner.

For more information about OCR, your civil rights and nondiscrimination responsibilities, how to notify your employees or beneficiaries of their civil rights protections and responsibilities and how to file a complaint, as well as technical assistance, training, and other resources, please visit www.ojp.gov/program/civil-rights-office/outreach. If you would like OCR to assist you in fulfilling your civil rights or nondiscrimination responsibilities, please contact us at askOCR@ojp.usdoj.gov or www.ojp.gov/program/civil-rights-office/about#ocr-contacts.

Memorandum Regarding NEPA

NEPA Letter Type
OJP - Categorical Exclusion

NEPA Letter

None of the following activities will be conducted whether under the Office of Justice Programs federal action or a related third-party action:

(1) New construction

(2) Any renovation or remodeling of a property located in an environmentally or historically sensitive area, including property (a) listed on or eligible for listing on the National Register of Historic Places, or (b) located within a 100-year flood plain, a wetland, or habitat for an endangered species

(3) A renovation that will change the basic prior use of a facility or significantly change its size

(4) Research and technology whose anticipated and future application could be expected to have an effect on the environment

(5) Implementation of a program involving the use of chemicals (including the identification, seizure, or closure of clandestine methamphetamine laboratories)

Additionally, the proposed action is neither a phase nor a segment of a project that when reviewed in its entirety would not meet the criteria for a categorical exclusion. Consequently, the subject federal action meets the Office of Justice Programs' criteria for a categorical exclusion as contained in paragraph 4(b) of Appendix D to Part 61 of Title 28 of the Code of Federal Regulations.

Questions about this determination may be directed to your grant manager or Orbin Terry, Environmental Coordinator for the Bureau of Justice Assistance.

NEPA Coordinator

First Name	Middle Name	Last Name
Orbin	no value	Terry

Award Information

This award is offered subject to the conditions or limitations set forth in the Award Information, Project Information, Financial Information, and Award Conditions.

Recipient Information

Recipient Name
CITY OF BUCKEYE

UEI
WYJHKKNHLA38

Street 1
530 E MONROE AVE

Street 2

City
BUCKEYE

State/U.S. Territory
Arizona

Zip/Postal Code
85326

Country
United States

County/Parish
no value

Province
no value

Award Details

Federal Award Date
11/15/24

Award Type
Initial

Award Number
15PBJA-24-GG-04436-BWCX

Supplement Number
00

Federal Award Amount
$200,000.00

Funding Instrument Type
Grant

Assistance Listing Number	Assistance Listings Program Title
16.835	Body Worn Camera Policy and Implementation

Statutory Authority

Department of Justice Appropriations Act, 2024 (Pub. L. No. 118-42, 138 Stat. 25, 149

[ ] *I have read and understand the information presented in this section of the Federal Award Instrument.*

Project Information

This award is offered subject to the conditions or limitations set forth in the Award Information, Project Information, Financial Information, and Award Conditions.

Solicitation Title

2024 BJA FY24 Body-Worn Camera Policy and
Implementation Program to Support Law Enforcement

Application Number
GRANT14213543

Grant Manager	Phone Number	E-mail Address
Wai Yee Tsang-White	202-451-7159	Wai.Yee.Tsang-White@usdoj.gov

Project Title
City of Buckeye Police Department New and Upgraded Body-Worn Camera Grant to Ensure Officer Accountability and Transparency.

Performance Period Start Date	Performance Period End Date
10/01/2024	09/30/2027

Budget Period Start Date	Budget Period End Date
10/01/2024	09/30/2027

Project Description

The City of Buckeye spans 640 square miles and has a population of approximately 114,000 people. Approximately 20,000 of the population reside within a federally designated disadvantaged community within Buckeye. Buckeye is one of the fastest growing cities in the country. Buckeye is only 15% built out and is estimated to have a population of 295,400 people by 2040, according to the Maricopa Association of Governments (MAG) https://www.growbuckeye.com/pages/choose-buckeye. Buckeye Police Department (BPD) saw a 21.5% increase in calls for service from 2021 (43,343) to 2023 (52,665) 638472307122000000 (buckeyeaz.gov). This increase in calls for service is projected to continually increase as the City's population continues to grow. BPD currently has 180 total personnel and a shortage of sworn officers. This requires BPD to evaluate ways to ensure that their officers' time is being utilized efficiently. BPD currently employs a community policing model wherein officers are active within the community. BPD is operating with obsolete Body Worn Camera (BWC) technologies that are inefficient which contributes to extended time spent on writing reports by BPD officers; time that could be utilized aiding more citizens who request BPD's assistance. This grant project seeks to enhance and support BPD's goal of a culture of accountability and performance, provide transparency within the community, and provide accurate records of law enforcement related interactions to protect parties from false allegations.

BPD seeks to resolve the inefficiencies through the expansion and upgrade of their current BWCs that are

obsolete and reaching the end of their useful life. The 200 upgraded BWCs requested have a greater battery capacity of 13 hours to ensure that events are recorded without worry of the BWC dying. The new BWCs also have bi-directional communications capabilities between multiple viewers and the wearer, to allow real-time communication, real-time location access to remote viewers, 160-degree field of view visibility, clearer and more detailed recordings, and the ability to connect to an additional point-of-view camera that can be utilized on the officer's glasses, hat, shoulder, or head.

[ ] *I have read and understand the information presented in this section of the Federal Award Instrument.*

Financial Information

This award is offered subject to the conditions or limitations set forth in the Award Information, Project Information, Financial Information, and Award Conditions.

The recipient budget is currently under review.

[ ] *I have read and understand the information presented in this section of the Federal Award Instrument.*

Award Conditions

This award is offered subject to the conditions or limitations set forth in the Award Information, Project Information, Financial Information, and Award Conditions.

Condition 1
Meaningful access requirement for individuals with limited English proficiency

The recipient, and any subrecipient at any tier, must take reasonable steps to ensure that individuals with limited English proficiency (LEP) have meaningful access to their programs and activities to comply with Title VI of the Civil Rights Act of 1964 (Title VI), which prohibits discrimination on the basis of national origin, including discrimination against individuals with LEP. Such steps may require providing language assistance services, such as interpretation or translation services. The Department of Justice guidance on compliance with this requirement may be found at "Guidance to Federal Financial Assistance Recipients Regarding Title VI Prohibition Against National Origin Discrimination Affecting Limited English Proficient Persons" (67 Fed. Reg. 41455-41472) (https://www.federalregister.gov/d/02-15207) and is incorporated by reference here.

Condition 2
Compliance with general appropriations-law restrictions on the use of federal funds (FY 2024)
The recipient, and any subrecipient ("subgrantee") at any tier, must comply with all applicable restrictions on the use of federal funds set out in federal appropriations statutes. Pertinent restrictions that may be set out in applicable appropriations acts are indicated at https://ojp.gov/funding/Explore/FY24AppropriationsRestrictions.htm, and are incorporated by reference here.

Should a question arise as to whether a particular use of federal funds by a recipient (or a subrecipient) would or might fall within the scope of an appropriations-law restriction, the recipient is to contact OJP for guidance, and may not proceed without the express prior written approval of OJP.

Condition 3

Compliance with DOJ regulations pertaining to civil rights and nondiscrimination - 28 C.F.R. Part 38

The recipient, and any subrecipient ("subgrantee") at any tier, must comply with all applicable requirements of 28 C.F.R. Part 38.

Among other things, 28 C.F.R. Part 38 states that recipients may not use direct Federal financial assistance from the Department to support or engage in any explicitly religious activities except when consistent with the Establishment Clause of the First Amendment and any other applicable requirements. An organization receiving Federal financial assistance also may not, in providing services funded by the Department of Justice, or in their outreach activities related to such services, discriminate against a program beneficiary or prospective program beneficiary on the basis of religion, a religious belief, a refusal to hold a religious belief, or refusal to attend or participate in a religious practice. Part 38 also sets out rules and requirements that pertain to recipient and subrecipient ("subgrantee") organizations that engage in or conduct explicitly religious activities, as well as rules and requirements that pertain to recipients and subrecipients that are faith-based or religious organizations. In addition, Part 38 states that a faith-based organization that participates a Department of Justice funded program retains its independence from the Government and may continue to carry out its mission consistent with religious freedom and conscience protections in Federal law.

Recipients and subrecipients that provide social services under this award must give written notice to beneficiaries and prospective beneficiaries prior to the provision of services (if practicable) which shall include language substantially similar to the language in 28 CFR Part 38, Appendix C, sections (1) through (4). A sample written notice may be found at https://www.ojp.gov/program/civil-rights-office/partnerships-faith-based-and-other-neighborhood-organizations.

In certain instances, a faith-based or religious organization may be able to take religion into account when making hiring decisions, provided it satisfies certain requirements. For more information, please see https://www.ojp.gov/funding/explore/legaloverview2024/civilrightsrequirements.

Condition 4
Requirements of the award; remedies for non-compliance or for materially false statements

The conditions of this award are material requirements of the award. Compliance with any assurances or certifications submitted by or on behalf of the recipient that relate to conduct during the period of performance also is a material requirement of this award.

Limited Exceptions. In certain special circumstances, the U.S. Department of Justice ("DOJ") may determine that it will not enforce, or enforce only in part, one or more requirements otherwise applicable to the award. Any such exceptions regarding enforcement, including any such exceptions made during the period of performance, are (or will be during the period of performance) set out through the Office of Justice Programs ("OJP") webpage entitled "Legal Notices: Special circumstances as to particular award conditions" (ojp.gov/funding/Explore/LegalNotices-AwardReqts.htm), and incorporated by reference into the award.

By signing and accepting this award on behalf of the recipient, the authorized recipient official accepts all material requirements of the award, and specifically adopts, as if personally executed by the authorized recipient official, all assurances or certifications submitted by or on behalf of the recipient that relate to conduct during the period of performance.

Failure to comply with one or more award requirements -- whether a condition set out in full below, a condition incorporated by reference below, or an assurance or certification related to conduct during the award period -- may result in OJP taking appropriate action with respect to the recipient and the award. Among other things, the OJP may withhold award funds, disallow costs, or suspend or terminate the award. DOJ, including OJP, also may take other legal action as appropriate.

Any materially false, fictitious, or fraudulent statement to the federal government related to this award (or concealment or omission of a material fact) may be the subject of criminal prosecution (including under 18 U.S.C. 1001 and/or 1621, and/or 34 U.S.C. 10271-10273), and also may lead to imposition of civil penalties and administrative remedies for false claims or otherwise (including under 31 U.S.C. 3729-3730 and 3801-3812).

Should any provision of a requirement of this award be held to be invalid or unenforceable by its terms, that provision shall first be applied with a limited construction so as to give it the maximum effect permitted by law. Should it be held, instead, that the provision is utterly invalid or -unenforceable, such provision shall be deemed severable from this

award.

Condition 5
Effect of failure to address audit issues

The recipient understands and agrees that the DOJ awarding agency (OJP or OVW, as appropriate) may withhold award funds, or may impose other related requirements, if (as determined by the DOJ awarding agency) the recipient does not satisfactorily and promptly address outstanding issues from audits required by the Part 200 Uniform Requirements (or by the terms of this award), or other outstanding issues that arise in connection with audits, investigations, or reviews of DOJ awards.

Condition 6
Applicability of Part 200 Uniform Requirements

The Uniform Administrative Requirements, Cost Principles, and Audit Requirements in 2 C.F.R. Part 200, as adopted and supplemented by DOJ in 2 C.F.R. Part 2800 (together, the "Part 200 Uniform Requirements") apply to this award from OJP.

For more information and resources on the Part 200 Uniform Requirements as they relate to OJP awards and subawards ("subgrants"), see the OJP website at https://ojp.gov/funding/Part200UniformRequirements.htm.

Record retention and access: Records pertinent to the award that the recipient (and any subrecipient ("subgrantee") at any tier) must retain -- typically for a period of 3 years from the date of submission of the final expenditure report (SF 425), unless a different retention period applies -- and to which the recipient (and any subrecipient ("subgrantee") at any tier) must provide access, include performance measurement information, in addition to the financial records, supporting documents, statistical records, and other pertinent records indicated at 2 C.F.R. 200.334.

In the event that an award-related question arises from documents or other materials prepared or distributed by OJP that may appear to conflict with, or differ in some way from, the provisions of the Part 200 Uniform Requirements, the recipient is to contact OJP promptly for clarification.

Condition 7
Reporting potential fraud, waste, and abuse, and similar misconduct

The recipient, and any subrecipients ("subgrantees") at any tier, must promptly refer to the DOJ Office of the Inspector General (OIG) any credible evidence that a principal, employee, agent, subrecipient, contractor, subcontractor, or other person has, in connection with funds under this award-- (1) submitted a claim that violates the False Claims Act; or (2) committed a criminal or civil violation of laws pertaining to fraud, conflict of interest, bribery, gratuity, or similar misconduct.

Potential fraud, waste, abuse, or misconduct involving or relating to funds under this award should be reported to the OIG by--(1) online submission accessible via the OIG webpage at https://oig.justice.gov/hotline/contact-grants.htm (select "Submit Report Online"); (2) mail directed to: U.S. Department of Justice, Office of the Inspector General, Investigations Division, ATTN: Grantee Reporting, 950 Pennsylvania Ave., NW, Washington, DC 20530; and/or (3) by facsimile directed to the DOJ OIG Investigations Division (Attn: Grantee Reporting) at (202) 616-9881 (fax).

Additional information is available from the DOJ OIG website at https://oig.justice.gov/hotline.

Condition 8
Requirements related to "de minimis" indirect cost rate

A recipient that is eligible under the Part 200 Uniform Requirements and other applicable law to use the "de minimis" indirect cost rate described in 2 C.F.R. 200.414(f), and that elects to use the "de minimis" indirect cost rate, must advise OJP in writing of both its eligibility and its election, and must comply with all associated requirements in the Part 200 Uniform Requirements. The "de minimis" rate may be applied only to modified total direct costs (MTDC) as defined by the Part 200 Uniform Requirements.

Condition 9
Compliance with applicable rules regarding approval, planning, and reporting of conferences, meetings, trainings, and other events

The recipient, and any subrecipient ("subgrantee") at any tier, must comply with all applicable laws, regulations, policies, and official DOJ guidance (including specific cost limits, prior approval and reporting requirements, where applicable) governing the use of federal funds for expenses related to conferences (as that term is defined by DOJ), including the provision of food and/or beverages at such conferences, and costs of attendance at such conferences.

Information on the pertinent DOJ definition of conferences and the rules applicable to this award appears in the DOJ Grants Financial Guide (currently, as section 3.10 of "Postaward Requirements" in the "DOJ Grants Financial Guide").

Condition 10
Requirement for data on performance and effectiveness under the award

The recipient must collect and maintain data that measure the performance and effectiveness of work under this award. The data must be provided to OJP in the manner (including within the timeframes) specified by OJP in the program solicitation or other applicable written guidance. Data collection supports compliance with the Government Performance and Results Act (GPRA) and the GPRA Modernization Act of 2010, and other applicable laws.

Condition 11
Compliance with DOJ Grants Financial Guide

References to the DOJ Grants Financial Guide are to the DOJ Grants Financial Guide as posted on the OJP website (currently, the "DOJ Grants Financial Guide" available at https://ojp.gov/financialguide/DOJ/index.htm), including any updated version that may be posted during the period of performance. The recipient agrees to comply with the DOJ Grants Financial Guide.

Condition 12
Compliance with DOJ regulations pertaining to civil rights and nondiscrimination - 28 C.F.R. Part 42

The recipient, and any subrecipient ("subgrantee") at any tier, must comply with all applicable requirements of 28 C.F.R. Part 42, specifically including any applicable requirements in Subpart E of 28 C.F.R. Part 42 that relate to an equal employment opportunity program.

Among other items, 28 C.F.R. § 42.106(d), 28 C.F.R. § 42.405(c), and 28 C.F.R. § 42.505(f) contain notice requirements that covered recipients must follow regarding the dissemination of information regarding federal nondiscrimination requirements.

Condition 13
Determination of suitability to interact with participating minors

SCOPE. This condition applies to this award if it is indicated -- in the application for the award (as approved by DOJ)(or in the application for any subaward, at any tier), the DOJ funding announcement (solicitation), or an associated federal statute -- that a purpose of some or all of the activities to be carried out under the award (whether by the recipient, or a subrecipient at any tier) is to benefit a set of individuals under 18 years of age.

The recipient, and any subrecipient at any tier, must make determinations of suitability before certain individuals may interact with participating minors. This requirement applies regardless of an individual's employment status.

The details of this requirement are posted on the OJP web site at https://ojp.gov/funding/Explore/Interact-Minors.htm (Award condition: Determination of suitability required, in advance, for certain individuals who may interact with participating minors), and are incorporated by reference here.

Condition 14
Requirement to disclose whether recipient is designated "high risk" by a federal grant-making agency outside of DOJ

If the recipient is designated "high risk" by a federal grant-making agency outside of DOJ, currently or at any time during the course of the period of performance under this award, the recipient must disclose that fact and certain related information to OJP by email at OJP.ComplianceReporting@ojp.usdoj.gov. For purposes of this disclosure, high risk includes any status under which a federal awarding agency provides additional oversight due to the recipient's past performance, or other programmatic or financial concerns with the recipient. The recipient's disclosure must include the following: 1. The federal awarding agency that currently designates the recipient high risk, 2. The date the recipient was designated high risk, 3. The high-risk point of contact at that federal awarding agency (name, phone number, and email address), and 4. The reasons for the high-risk status, as set out by the federal awarding agency.

Condition 15
Employment eligibility verification for hiring under the award

1. The recipient (and any subrecipient at any tier) must--

A. Ensure that, as part of the hiring process for any position within the United States that is or will be funded (in whole or in part) with award funds, the recipient (or any subrecipient) properly verifies the employment eligibility of the individual who is being hired, consistent with the provisions of 8 U.S.C. 1324a(a)(1).

B. Notify all persons associated with the recipient (or any subrecipient) who are or will be involved in activities under this award of both--

(1) this award requirement for verification of employment eligibility, and

(2) the associated provisions in 8 U.S.C. 1324a(a)(1) that, generally speaking, make it unlawful, in the United States, to hire (or recruit for employment) certain aliens.

C. Provide training (to the extent necessary) to those persons required by this condition to be notified of the award requirement for employment eligibility verification and of the associated provisions of 8 U.S.C. 1324a(a)(1).

D. As part of the recordkeeping for the award (including pursuant to the Part 200 Uniform Requirements), maintain records of all employment eligibility verifications pertinent to compliance with this award condition in accordance with Form I-9 record retention requirements, as well as records of all pertinent notifications and trainings.

2. Monitoring

The recipient's monitoring responsibilities include monitoring of subrecipient compliance with this condition.

3. Allowable costs

To the extent that such costs are not reimbursed under any other federal program, award funds may be obligated for the reasonable, necessary, and allocable costs (if any) of actions designed to ensure compliance with this condition.

4. Rules of construction

A. Staff involved in the hiring process

For purposes of this condition, persons "who are or will be involved in activities under this award" specifically includes (without limitation) any and all recipient (or any subrecipient) officials or other staff who are or will be involved in the hiring process with respect to a position that is or will be funded (in whole or in part) with award funds.

B. Employment eligibility confirmation with E-Verify

For purposes of satisfying the requirement of this condition regarding verification of employment eligibility, the recipient (or any subrecipient) may choose to participate in, and use, E-Verify (www.e-verify.gov), provided an appropriate person authorized to act on behalf of the recipient (or subrecipient) uses E-Verify (and follows the proper E-Verify procedures, including in the event of a "Tentative Nonconfirmation" or a "Final Nonconfirmation") to confirm employment eligibility for each hiring for a position in the United States that is or will be funded (in whole or in part) with award funds.

C. "United States" specifically includes the District of Columbia, Puerto Rico, Guam, the Virgin Islands of the United States, and the Commonwealth of the Northern Mariana Islands.

D. Nothing in this condition shall be understood to authorize or require any recipient, any subrecipient at any tier, or any person or other entity, to violate any federal law, including any applicable civil rights or nondiscrimination law.

E. Nothing in this condition, including in paragraph 4.B., shall be understood to relieve any recipient, any subrecipient at any tier, or any person or other entity, of any obligation otherwise imposed by law, including 8 U.S.C. 1324a(a)(1).

Questions about E-Verify should be directed to DHS. For more information about E-Verify visit the E-Verify website (https://www.e-verify.gov/) or email E-Verify at E-Verify@dhs.gov. E-Verify employer agents can email E-Verify at E-VerifyEmployerAgent@dhs.gov.

Questions about the meaning or scope of this condition should be directed to OJP, before award acceptance.

Condition 16
Encouragement of policies to ban text messaging while driving

Pursuant to Executive Order 13513, "Federal Leadership on Reducing Text Messaging While Driving," 74 Fed. Reg. 51225 (October 1, 2009), DOJ encourages recipients and subrecipients ("subgrantees") to adopt and enforce policies banning employees from text messaging while driving any vehicle during the course of performing work funded by this award, and to establish workplace safety policies and conduct education, awareness, and other outreach to decrease crashes caused by distracted drivers.

Condition 17
Reclassification of various statutory provisions to a new Title 34 of the United States Code

On September 1, 2017, various statutory provisions previously codified elsewhere in the U.S. Code were editorially reclassified (that is, moved and renumbered) to a new Title 34, entitled "Crime Control and Law Enforcement." The reclassification encompassed a number of statutory provisions pertinent to OJP awards (that is, OJP grants and cooperative agreements), including many provisions previously codified in Title 42 of the U.S. Code.

Effective as of September 1, 2017, any reference in this award document to a statutory provision that has been reclassified to the new Title 34 of the U.S. Code is to be read as a reference to that statutory provision as reclassified to Title 34. This rule of construction specifically includes references set out in award conditions, references set out in material incorporated by reference through award conditions, and references set out in other award requirements.

Condition 18
Restrictions and certifications regarding non-disclosure agreements and related matters

No recipient or subrecipient ("subgrantee") under this award, or entity that receives a procurement contract or subcontract with any funds under this award, may require any employee or contractor to sign an internal confidentiality agreement or statement that prohibits or otherwise restricts, or purports to prohibit or restrict, the reporting (in accordance with law) of waste, fraud, or abuse to an investigative or law enforcement representative of a federal department or agency authorized to receive such information.

The foregoing is not intended, and shall not be understood by the agency making this award, to contravene requirements applicable to Standard Form 312 (which relates to classified information), Form 4414 (which relates to sensitive compartmented information), or any other form issued by a federal department or agency governing the nondisclosure of classified information.

1. In accepting this award, the recipient--

a. represents that it neither requires nor has required internal confidentiality agreements or statements from employees or contractors that currently prohibit or otherwise currently restrict (or purport to prohibit or restrict) employees or contractors from reporting waste, fraud, or abuse as described above; and

b. certifies that, if it learns or is notified that it is or has been requiring its employees or contractors to execute

agreements or statements that prohibit or otherwise restrict (or purport to prohibit or restrict), reporting of waste, fraud, or abuse as described above, it will immediately stop any further obligations of award funds, will provide prompt written notification to the federal agency making this award, and will resume (or permit resumption of) such obligations only if expressly authorized to do so by that agency.

2. If the recipient does or is authorized under this award to make subawards ("subgrants"), procurement contracts, or both--

a. it represents that--

(1) it has determined that no other entity that the recipient's application proposes may or will receive award funds (whether through a subaward ("subgrant"), procurement contract, or subcontract under a procurement contract) either requires or has required internal confidentiality agreements or statements from employees or contractors that currently prohibit or otherwise currently restrict (or purport to prohibit or restrict) employees or contractors from reporting waste, fraud, or abuse as described above; and

(2) it has made appropriate inquiry, or otherwise has an adequate factual basis, to support this representation; and

b. it certifies that, if it learns or is notified that any subrecipient, contractor, or subcontractor entity that receives funds under this award is or has been requiring its employees or contractors to execute agreements or statements that prohibit or otherwise restrict (or purport to prohibit or restrict), reporting of waste, fraud, or abuse as described above, it will immediately stop any further obligations of award funds to or by that entity, will provide prompt written notification to the federal agency making this award, and will resume (or permit resumption of) such obligations only if expressly authorized to do so by that agency.

Condition 19
OJP Training Guiding Principles

Any training or training materials that the recipient -- or any subrecipient ("subgrantee") at any tier -- develops or delivers with OJP award funds must adhere to the OJP Training Guiding Principles for Grantees and Subgrantees, available at https://www.ojp.gov/funding/implement/training-guiding-principles-grantees-and-subgrantees.

Condition 20
Specific post-award approval required to use a noncompetitive approach in any procurement contract that would exceed $250,000

The recipient, and any subrecipient ("subgrantee") at any tier, must comply with all applicable requirements to obtain specific advance approval to use a noncompetitive approach in any procurement contract that would exceed the Simplified Acquisition Threshold (currently, $250,000). This condition applies to agreements that -- for purposes of federal grants administrative requirements -- OJP considers a procurement "contract" (and therefore does not consider a subaward).

The details of the requirement for advance approval to use a noncompetitive approach in a procurement contract under an OJP award are posted on the OJP web site at https://ojp.gov/funding/Explore/NoncompetitiveProcurement.htm (Award condition: Specific post-award approval required to use a noncompetitive approach in a procurement contract (if contract would exceed $250,000)), and are incorporated by reference here.

Condition 21
Requirement to report potentially duplicative funding

If the recipient currently has other active awards of federal funds, or if the recipient receives any other award of federal funds during the period of performance for this award, the recipient promptly must determine whether funds from any of those other federal awards have been, are being, or are to be used (in whole or in part) for one or more of the identical cost items for which funds are provided under this award. If so, the recipient must promptly notify the DOJ awarding agency (OJP or OVW, as appropriate) in writing of the potential duplication, and, if so requested by the DOJ awarding agency, must seek a budget-modification or change-of-project-scope Grant Award Modification (GAM) to eliminate any inappropriate duplication of funding.

Condition 22
Required training for Grant Award Administrator and Financial Manager

The Grant Award Administrator and all Financial Managers for this award must have successfully completed an "OJP financial management and grant administration training" by 120 days after the date of the recipient's acceptance of the award. Successful completion of such a training on or after January 1, 2021, will satisfy this condition.

In the event that either the Grant Award Administrator or a Financial Manager for this award changes during the period of performance, the new Grant Award Administrator or Financial Manager must have successfully completed an "OJP financial management and grant administration training" by 120 calendar days after the date the Entity Administrator enters updated Grant Award Administrator or Financial Manager information in JustGrants. Successful completion of such a training on or after January 1, 2021, will satisfy this condition.

A list of OJP trainings that OJP will consider "OJP financial management and grant administration training" for purposes of this condition is available at https://onlinegfmt.training.ojp.gov/. All trainings that satisfy this condition include a session on grant fraud prevention and detection.

The recipient should anticipate that OJP will immediately withhold ("freeze") award funds if the recipient fails to comply with this condition. The recipient's failure to comply also may lead OJP to impose additional appropriate conditions on this award.

Condition 23
Compliance with 41 U.S.C. 4712 (including prohibitions on reprisal; notice to employees)

The recipient (and any subrecipient at any tier) must comply with, and is subject to, all applicable provisions of 41 U.S.C. 4712, including all applicable provisions that prohibit, under specified circumstances, discrimination against an employee as reprisal for the employee's disclosure of information related to gross mismanagement of a federal grant, a gross waste of federal funds, an abuse of authority relating to a federal grant, a substantial and specific danger to public health or safety, or a violation of law, rule, or regulation related to a federal grant.

The recipient also must inform its employees, in writing (and in the predominant native language of the workforce), of employee rights and remedies under 41 U.S.C. 4712.

Should a question arise as to the applicability of the provisions of 41 U.S.C. 4712 to this award, the recipient is to contact the DOJ awarding agency (OJP or OVW, as appropriate) for guidance.

Condition 24
Requirements pertaining to prohibited conduct related to trafficking in persons (including reporting requirements and OJP authority to terminate award)

The recipient, and any subrecipient ("subgrantee") at any tier, must comply with all applicable requirements (including requirements to report allegations) pertaining to prohibited conduct related to the trafficking of persons, whether on the part of recipients, subrecipients ("subgrantees"), or individuals defined (for purposes of this condition) as "employees" of the recipient or of any subrecipient.

The details of the recipient's obligations related to prohibited conduct related to trafficking in persons are posted on the OJP web site at https://ojp.gov/funding/Explore/ProhibitedConduct-Trafficking.htm (Award condition: Prohibited conduct by recipients and subrecipients related to trafficking in persons (including reporting requirements and OJP authority to terminate award)), and are incorporated by reference here.

Condition 25
Potential imposition of additional requirements

The recipient agrees to comply with any additional requirements that may be imposed by the DOJ awarding agency (OJP or OVW, as appropriate) during the period of performance for this award, if the recipient is designated as "high-risk" for purposes of the DOJ high-risk grantee list.

Condition 26
Requirement to report actual or imminent breach of personally identifiable information (PII)

The recipient (and any "subrecipient" at any tier) must have written procedures in place to respond in the event of an actual or imminent "breach" (OMB M-17-12) if it (or a subrecipient) -- (1) creates, collects, uses, processes, stores, maintains, disseminates, discloses, or disposes of "Personally Identifiable Information (PII)" (2 CFR 200.1) within the scope of an OJP grant-funded program or activity, or (2) uses or operates a "Federal information system" (OMB Circular A-130). The recipient's breach procedures must include a requirement to report actual or imminent breach of PII to an OJP Program Manager no later than 24 hours after an occurrence of an actual breach, or the detection of an imminent breach.

Condition 27
Requirements related to System for Award Management and Universal Identifier Requirements

The recipient must comply with applicable requirements regarding the System for Award Management (SAM), currently accessible at https://www.sam.gov/. This includes applicable requirements regarding registration with SAM, as well as maintaining the currency of information in SAM.

The recipient also must comply with applicable restrictions on subawards ("subgrants") to first-tier subrecipients (first-tier "subgrantees"), including restrictions on subawards to entities that do not acquire and provide (to the recipient) the unique entity identifier required for SAM registration.

The details of the recipient's obligations related to SAM and to unique entity identifiers are posted on the OJP web site at https://ojp.gov/funding/Explore/SAM.htm (Award condition: System for Award Management (SAM) and Universal Identifier Requirements), and are incorporated by reference here.

This condition does not apply to an award to an individual who received the award as a natural person (i.e., unrelated to any business or non-profit organization that he or she may own or operate in his or her name).

Condition 28
Compliance with restrictions on the use of federal funds--prohibited and controlled equipment under OJP awards

Consistent with Executive Order 14074, “Advancing Effective, Accountable Policing and Criminal Justice Practices To Enhance Public Trust and Public Safety,” OJP has prohibited the use of federal funds under this award for purchases or transfers of specified equipment by law enforcement agencies. In addition, OJP requires the recipient, and any subrecipient (“subgrantee”) at any tier, to put in place specified controls prior to using federal funds under this award to acquire or transfer any property identified on the “controlled equipment” list. The details of the requirement are posted on the OJP web site at https://www.ojp.gov/funding/explore/prohibited-and-controlled-equipment (Award condition: Compliance with restrictions on the use of federal funds--prohibited and controlled equipment under OJP awards), and are incorporated by reference here.

Condition 29
Restrictions on "lobbying"

In general, as a matter of federal law, federal funds awarded by OJP may not be used by the recipient, or any subrecipient ("subgrantee") at any tier, either directly or indirectly, to support or oppose the enactment, repeal, modification, or adoption of any law, regulation, or policy, at any level of government. See 18 U.S.C. 1913. (There may be exceptions if an applicable federal statute specifically authorizes certain activities that otherwise would be barred by law.)

Another federal law generally prohibits federal funds awarded by OJP from being used by the recipient, or any subrecipient at any tier, to pay any person to influence (or attempt to influence) a federal agency, a Member of Congress, or Congress (or an official or employee of any of them) with respect to the awarding of a federal grant or cooperative agreement, subgrant, contract, subcontract, or loan, or with respect to actions such as renewing, extending, or modifying any such award. See 31 U.S.C. 1352. Certain exceptions to this law apply, including an exception that applies to Indian tribes and tribal organizations.

Should any question arise as to whether a particular use of federal funds by a recipient (or subrecipient) would or might

fall within the scope of these prohibitions, the recipient is to contact OJP for guidance, and may not proceed without the express prior written approval of OJP.

Condition 30
All subawards ("subgrants") must have specific federal authorization

The recipient, and any subrecipient ("subgrantee") at any tier, must comply with all applicable requirements for authorization of any subaward. This condition applies to agreements that -- for purposes of federal grants administrative requirements -- OJP considers a "subaward" (and therefore does not consider a procurement "contract").

The details of the requirement for authorization of any subaward are posted on the OJP web site at https://ojp.gov/funding/Explore/SubawardAuthorization.htm (Award condition: All subawards ("subgrants") must have specific federal authorization), and are incorporated by reference here.

Condition 31
Compliance with DOJ regulations pertaining to civil rights and nondiscrimination - 28 C.F.R. Part 54

The recipient, and any subrecipient ("subgrantee") at any tier, must comply with all applicable requirements of 28 C.F.R. Part 54, which relates to nondiscrimination on the basis of sex in certain "education programs."

Among other items, 28 C.F.R. § 54.140 contains notice requirements that covered recipients must follow regarding the dissemination of information regarding federal nondiscrimination requirements.

Condition 32
The recipient understands that, in accepting this award, the Authorized Representative declares and certifies, among other things, that he or she possesses the requisite legal authority to accept the award on behalf of the recipient entity and, in so doing, accepts (or adopts) all material requirements that relate to conduct throughout the period of performance under this award. The recipient further understands, and agrees, that it will not assign anyone to the role of Authorized Representative during the period of performance under the award without first ensuring that the individual has the requisite legal authority.

Condition 33
Verification and updating of recipient contact information

The recipient must verify its Grant Award Administrator, Financial Manager, and Authorized Representative contact information in JustGrants, including telephone number and e-mail address. If any information is incorrect or has changed, the award recipient’s Entity Administrator must make changes to contact information through DIAMD. Instructions on how to update contact information in JustGrants can be found at https://justicegrants.usdoj.gov/training/training-entity-management.

Condition 34
The award recipient agrees to participate in a data collection process measuring program outputs and outcomes. The data elements for this process will be outlined by the Office of Justice Programs.

Condition 35
Confidentiality of data

The recipient (and any subrecipient at any tier) must comply with all confidentiality requirements of 34 U.S.C. 10231 and 28 C.F.R. Part 22 that are applicable to collection, use, and revelation of data or information. The recipient further agrees, as a condition of award approval, to submit a Privacy Certificate that is in accord with requirements of 28 C.F.R. Part 22 and, in particular, 28 C.F.R. 22.23.

Condition 36
Copyright; Data rights

The recipient acknowledges that OJP reserves a royalty-free, non-exclusive, and irrevocable license to reproduce, publish, or otherwise use, and authorize others to use (in whole or in part, including in connection with derivative works), for Federal purposes: (1) any work subject to copyright developed under an award or subaward (at any tier); and (2) any rights of copyright to which a recipient or subrecipient (at any tier) purchases ownership with Federal support.

The recipient acknowledges that OJP has the right to (1) obtain, reproduce, publish, or otherwise use the data first produced under any such award or subaward; and (2) authorize others to receive, reproduce, publish, or otherwise use such data for Federal purposes. "Data" includes data as defined in Federal Acquisition Regulation (FAR) provision 52.227-14 (Rights in Data - General).

It is the responsibility of the recipient (and of each subrecipient (at any tier), if applicable) to ensure that the provisions of this condition are included in any subaward (at any tier) under this award.

The recipient has the responsibility to obtain from subrecipients, contractors, and subcontractors (if any) all rights and data necessary to fulfill the recipient's obligations to the Government under this award. If a proposed subrecipient, contractor, or subcontractor refuses to accept terms affording the Government such rights, the recipient shall promptly bring such refusal to the attention of the OJP program manager for the award and not proceed with the agreement in question without further authorization from the OJP program office.

Condition 37
Justice Information Sharing

Information sharing projects funded under this award must comply with DOJ's Global Justice Information Sharing Initiative (Global) guidelines. The recipient (and any subrecipient at any tier) must conform to the Global Standards Package (GSP) and all constituent elements, where applicable, as described at: https:/ / it.ojp.gov/ gsp_grantcondition. The recipient (and any subrecipient at any tier) must document planned approaches to information sharing and describe compliance with the GSP and appropriate privacy policy that protects shared information, or provide detailed justification for why an alternative approach is recommended.

Condition 38
The recipient agrees to cooperate with any assessments, national evaluation efforts, or information or data collection requests, including, but not limited to, the provision of any information required for the assessment or evaluation of any activities within this project.

Condition 39
The recipient agrees to comply with OJP grant monitoring guidelines, protocols, and procedures, and to cooperate with BJA and OCFO on all grant monitoring requests, including requests related to desk reviews, enhanced programmatic desk reviews, and/or site visits. The recipient agrees to provide to BJA and OCFO all documentation necessary to complete monitoring tasks, including documentation related to any subawards made under this award. Further, the recipient agrees to abide by reasonable deadlines set by BJA and OCFO for providing the requested documents. Failure to cooperate with BJA's/OCFO's grant monitoring activities may result in sanctions affecting the recipient's DOJ awards, including, but not limited to: withholdings and/or other restrictions on the recipient's access to grant funds; referral to the Office of the Inspector General for audit review; designation of the recipient as a DOJ High Risk grantee; or termination of an award(s).

Condition 40
The recipient must submit a BWC policy no later than 120 days of award acceptance, unless an extension for good cause shown has been granted by BJA. Failure to submit a BWC policy within 120 days of award acceptance may result in the freezing of grant funds.

Condition 41
As of the first day of the period of performance for the award, the recipient may incur project costs using non-federal funds as necessary, but any such project costs are incurred at the recipient's risk until, at a minimum, all applicable withholding conditions are removed by OJP (via an Award Condition Modification (ACM)). Federal funds will not be used to provide reimbursement for the purchase of equipment already owned by the recipient prior to the first day of

the period of performance for the award.

Except to the extent (if any) that an award condition expressly precludes reimbursement of project costs incurred "at-risk," if and when the recipient makes a valid acceptance of this award and OJP removes each applicable withholding condition through an ACM, the recipient is authorized to reimburse itself for project costs incurred "at-risk" earlier during the period of performance (such as project costs incurred prior to award acceptance or prior to removal of an applicable withholding condition), provided that those project costs are otherwise allowable costs under the award.

Condition 42
Body-worn cameras, policies and procedures

In accepting this award, the recipient agrees not to use award funds for purchases of body-worn cameras or related expenses for any agency unless that agency has policies and procedures in place that reinforce appropriate agency Use of Force policies and training and address technology usage, evidence acquisition, data storage and retention, as well as privacy issues, accountability and discipline.

Condition 43
Recipient understands and agrees that it must submit quarterly Federal Financial Reports (SF-425) and semi-annual performance reports through JustGrants (justgrants.usdoj.gov), and that it must submit quarterly performance metrics reports through BJA's Performance Measurement Tool (PMT) website (https://bjapmt.ojp.gov/). For more detailed information on reporting and other requirements, refer to BJA's website. Failure to submit required reports by established deadlines may result in the freezing of grant funds and High Risk designation.

Condition 44
FFATA reporting: Subawards and executive compensation

The recipient must comply with applicable requirements to report first-tier subawards ("subgrants") of $30,000 or more and, in certain circumstances, to report the names and total compensation of the five most highly compensated executives of the recipient and first-tier subrecipients (first-tier "subgrantees") of award funds. The details of recipient obligations, which derive from the Federal Funding Accountability and Transparency Act of 2006 (FFATA), are posted on the OJP web site at https://ojp.gov/funding/Explore/FFATA.htm (Award condition: Reporting Subawards and Executive Compensation), and are incorporated by reference here.

This condition, including its reporting requirement, does not apply to-- (1) an award of less than $30,000, or (2) an award made to an individual who received the award as a natural person (i.e., unrelated to any business or non-profit organization that he or she may own or operate in his or her name).

Condition 45
The recipient agrees that no funds under this grant award (including via subcontract or subaward, at any tier) may be used for unmanned aircraft systems (UAS), which includes unmanned aircraft vehicles (UAV), or for any accompanying accessories to support UAS.

Condition 46
The recipient's budget (and budget narrative) is pending clearance by OJP.

Prior to budget clearance (and unless there is a more restrictive condition on this award, in which case the terms of that more restrictive condition apply): The recipient may not drawdown more than 10% of the award. Pre-clearance obligations, expenditures, and drawdowns may be disallowed if not in compliance with program requirements.

The recipient should be judicious in using award funds prior to budget clearance. Generally, OJP expects that recipients (depending on the specific project scope) may need to advertise for award-funded positions, pay personnel and fringe benefits for positions budgeted under the award, plan for project activities, attend training and pay training-related travel needed to begin the project, and engage in other limited activities conducted by recipient staff (i.e., generally not requiring a subaward or procurement contract under an award).

OJP will issue an Award Condition Modification upon budget clearance.

[ ] *I have read and understand the information presented in this section of the Federal Award Instrument.*

Award Acceptance

Declaration and Certification to the U.S. Department of Justice as to Acceptance

By checking the declaration and certification box below, I--

A. Declare to the U.S. Department of Justice (DOJ), under penalty of perjury, that I have authority to make this declaration and certification on behalf of the applicant.

B. Certify to DOJ, under penalty of perjury, on behalf of myself and the applicant, to the best of my knowledge and belief, that the following are true as of the date of this award acceptance: (1) I have conducted or there was conducted (including by applicant's legal counsel as appropriate and made available to me) a diligent review of all terms and conditions of, and all supporting materials submitted in connection with, this award, including any assurances and certifications (including anything submitted in connection therewith by a person on behalf of the applicant before, after, or at the time of the application submission and any materials that accompany this acceptance and certification); and (2) I have the legal authority to accept this award on behalf of the applicant.

C. Accept this award on behalf of the applicant.

D. Declare the following to DOJ, under penalty of perjury, on behalf of myself and the applicant: (1) I understand that, in taking (or not taking) any action pursuant to this declaration and certification, DOJ will rely upon this declaration and certification as a material representation; and (2) I understand that any materially false, fictitious, or fraudulent information or statement in this declaration and certification (or concealment or omission of a material fact as to either) may be the subject of criminal prosecution (including under 18 U.S.C. §§ 1001 and/or 1621, and/or 34 U.S.C. §§ 10271-10273), and also may subject me and the applicant to civil penalties and administrative remedies under the federal False Claims Act (including under 31 U.S.C. §§ 3729-3730 and/or §§ 3801-3812) or otherwise.

Agency Approval

Title of Approving Official	Name of Approving Official	Signed Date And Time
Acting Assistant Attorney General	Brent J. Cohen	11/13/24 11:18 AM

Authorized Representative

[ ] no value

Entity Acceptance

Title of Authorized Entity Official
no value

Signed Date And Time
no value

U.S. Dept. of Justice – 2024 Body-Worn Camera Program Awarded Summary Recap

Project Description:

The City of Buckeye Council previously approved the submission of an application, which has been subsequently awarded by the U.S. Department of Justice. The 2024 Body-Worn Camera Policy and Implementation Program award is for the Buckeye Police Department to obtain new body-worn cameras to upgrade and replace current body-worn cameras as they are nearing the end of their useful life and are not equipped to meet today's needs. The new body-worn cameras awarded through this grant are equipped with state-of-the-art technology to meet today's needs and improved battery capacity to increase reliability. The grant also supports an Auto-Transcribe Service which will aid in officer's report writing to save time and increase accuracy. Lastly, the grant award supports the Redaction Assistant Service to aid in body-worn camera footage redaction to improve accuracy and timeliness in providing requested footage. The grant covers a 3-year period.

Project Cost

$ 400,000 ($200,000 Reimbursable based on budget). The body-worn camera contract includes a warranty, therefore there is no maintenance cost.

Required Match

- $ 200,000

Grant Amount

- $ 200,000

Plans Once Grant Expires:

- Any additional body-worn camera needs will come from the Buckeye Police Department's General Fund account unless additional grant funding opportunities become available in which the Grants team will pursue.

Objectives and Expected Outcomes

- The objective is to support Buckeye Police Department's body-worn camera program by enhancing body-worn camera reliability and capability through new body-worn cameras to replace and upgrade the current body-worn cameras that are nearing the end of their useful life and are becoming increasingly unreliable due to battery and charging issues and the current body-worn cameras are not equipped to meet today's needs. The body-worn camera program is an existing Buckeye Police Department program that is essentially a mandatory program in today's environment. The current body-worn camera contract expires July 15, 2025. This grant will help Buckeye to enter into the next required body-worn camera contract. This should satisfy body-worn camera anticipated needs for the next 3 years.

Time Period for the Grant

- FY 2026 - FY 2028

CITY OF BUCKEYE
Regular Council Meeting
COUNCIL ACTION REPORT

MEETING DATE: 12/17/24	**AGENDA ITEM:** 4.T. PW - Custodial Services Contract
DATE PREPARED: 12/17/24	**DISTRICT NO.:**
STAFF LIAISON: Bret Hodne, Public Works Director, bhodne@buckeyeaz.gov (623) 349-6800	
DEPARTMENT: Public Works	**AGENDA ITEM TYPE:** Consent Agenda Items / New Business

ACTION/MOTION: (This language identifies the formal motion to be made by the Council)
Council to take action on Contract No. 2025222 for City-wide Custodial Services between the City of Buckeye, an Arizona municipal corporation (the "City"), and CCS Facility Services – Arizona Inc. a Delaware corporation (the "Contractor"), for custodial services throughout all city facilities in the City of Buckeye.

SUMMARY

PROJECT DESCRIPTION:
CCS Facility Services – Arizona Inc. a Delaware corporation provides custodial services for all City facilities and City park restroom buildings, excluding Fire Houses. In addition to the routine cleaning service, Contractor provides quarterly carpet and window cleaning. The frequency of service is based on the needs of each facility and range from a once a week service to daily service.

BENEFITS:
Providing a clean facility for employees and visitors improves the aesthetics and helps prevent the spread of diseases.

FUTURE ACTION:
In the future, the City could continue this contract, establish a new contract, or hire the necessary staff to bring this service in-house.

FINANCIAL IMPACT STATEMENT:
The total cost for custodial contract is included within the FY24 budget.

CURRENT FISCAL YEAR TOTAL COST:
$596,000.00 this includes a labor increase that is effective in January 2025.

BUDGETED:
Yes

FISCAL YEAR:
2025

FUND/DEPARTMENT:
10003170-520019, 40013220-520019, 10003176-520019, 10003177-520019, 10003174-520019, 40003210-520019 and 10003179-520019.

Items related to a project or facility location must include an attached vicinity map for Council

Review.
ATTACHMENTS:
Route_Schedule_Nov__2024.pdf
Contract No. 2025222.pdf

Location Name:	Mon	Tues	Wed	Thurs	Fri	Sat	Sun
Night Route 1							
Heritage Park (809 N1st St.)	X	X	X	X	X	X	
Airport (3000 S. Palo Verde Rd)	X			X			
Sundance Park (22865 Lower Buckeye Rd)	X	X	X	X	X	X	X
Water Resources (423 Arizona Eastern Ave)	X	X	X	X			
Fire station #703 (2582 N Verrado Way)		X		X			
Fleet Maint. Building (415 Arizona E. Ave)	X		X				
Park & Ride (19580 W Palm Ln)	X			X			
Coronado Building (201 Ecoronado St)		X		X			
Festival Ranch police Substation (27360 W Wagner Complex Dr)		X		X			
Night Route 2							
Chamber of Commerce (508 E. Monroe)	X	X	X	X			
City Hall (530 E. Monroe Ave) 1	X	X	X	X			
Public Works Facility (23454 W US Highway 85)	X	X	X	X			
Coyote Branch Library (21699 W. Yuma Rd, Ste 116)	X	X	X	X	X	X	
Night Route 3							
City Aquatic Center (207 N 9th St, Buckeye, AZ 85326)	X	X	X	X	X	X	
Sadie-Rec Center (1003 E Eason Ave)	X	X	X	X	X	X	
Town Park Restrooms	X	X	X	X	X	X	
Down Town Library (310 N. 6th Street)	X	X	X	X	X	X	
Senior Center (201 E. Monroe)	X	X	X	X	X	X	
Community Services Building (110 E Irwin Ave)	X	X	X	X			
Earl Edgar Park (500 S Miller Rd, Buckeye, AZ 85326)	X	X	X	X	X	X	
Night Route 4							
Water Resources (423 Arizona Eastern Ave)	X	X	X	X			
Sundance Crossings Rec Center 21699 W Yuma (Suite 105 & 10	X	X	X	X	X	X	
Night Route 5							
City Hall East at the Landing	X	X	X	X	X		
Day Route 1							
Motor Vehicle Division (Services temporary suspended)							
Skyline Park (2600 N Watson RD)	X			X	X	X	X
Central WRF (915 S 7th St)	X			X			
City of Buckeye- BPD Training Facility	X	X	X	X	X		
Police Evidence Building (8050 S Shepard Trail)		X		X			
Police Annex Building (100 N Apache Rd)	X	X	X	X	X	X	X
Police Communications (100 N Apache Rd)	X	X	X	X	X	X	X
Day Route 2							
Fire Admin (21699 W. Yuma Rd, Ste 101)	X	X	X	X			
Police Admin -Sundance (21699 W Yuma Rd)	X	X	X	X	X	X	X
Court (21699 W. Yuma Rd, Ste 101)	X	X	X	X	X		
Festival Ranch WRF (18940 N 287th Ave)			X				
Sundance WRF (21760 Watkins)	X			X			
Tartesso WRF (31550 W. McDowell Road)			X				
Charman Building (1101 E Ash Ave)	X	X	x	x			

COOPERATIVE CONTRACT PURCHASE ADDENDUM (CCPA)
BETWEEN THE CITY OF BUCKEYE
AND
CCS FACILITY SERVICES-ARIZONA INC.

CUSTODIAL, GROUNDS, AND MAINTENANCE SERVICES
CONTRACT NO. 2025222

THIS COOPERATIVE CONTRACT PURCHASE ADDENDUM (this "Addendum") is entered into as of_____, between the City of Buckeye, an Arizona municipal corporation (the "City"), and CCS Facility Services – Arizona Inc. a Delaware corporation (the "Contractor").

WHEREAS, after a competitive procurement process, which is documented in the Award attached hereto as **Exhibit A** and incorporated herein by reference, the 1Government Procurement Alliance (1GPA) and Paradise Valley Unified School District Contract entered into Contract No. 20-01PV, dated June 1, 2020 with the Contractor (such contract and subsequent amendments thereto here referred to as the "the 1Government Procurement Alliance (1GPA) and Paradise Valley Unified School District Contract"), which is attached hereto as **Exhibit A** and incorporated herein by reference; and

WHEREAS, the City is permitted by Section 24-3-16 of the City Procurement Code to make purchases via cooperative purchasing pursuant to a cooperative purchasing contract; and

WHEREAS, the 1Government Procurement Alliance (1GPA) and Paradise Valley Unified School District Contract contains a schedule of prices, which is attached hereto as **Exhibit B** and incorporated herein by reference (the "Fee Schedule"); and

WHEREAS, the City desires to enter into contract with the Contractor under the terms and conditions of the The 1Government Procurement Alliance (1GPA) and Paradise Valley Unified School District Contract, by issuing this Addendum to said contract.

THEREFORE, the City now enters into this Addendum with Contractor for the goods and services set forth in the 1Government Procurement Alliance (1GPA) and Paradise Valley Unified School District Contract. This Addendum incorporates the terms and conditions of The 1Government Procurement Alliance (1GPA) and Paradise Valley Unified School District Contract, except to the extent superseded herein. All references in the 1Government Procurement Alliance (1GPA) and Paradise Valley Unified School District Contract shall be read to refer to the City of Buckeye. This Addendum shall be effective as of the date set forth below for approval and remain in effect for the remainder of the 1Government Procurement Alliance (1GPA) and Paradise Valley Unified School District Contract 20-01PV, unless such term is modified or extended pursuant to the terms of the 1Government Procurement Alliance (1GPA) and Paradise Valley Unified School District Contract. Payments to the Contractor shall be calculated in accordance with the Fee Schedule, which is attached hereto as part of **Exhibit B**, in a total amount not to exceed $600,000.00.

FURTHER, this Addendum is subject to cancellation pursuant to ARS §38-511.

FURTHER, to the extent applicable, the Contractor and its subcontractors warrant compliance with all federal immigration laws and regulations that relate to their employees and their compliance with the E-verify requirements under A.R.S. § 23-214(A). The Contractor's or its subcontractors' failure to comply with such warranty shall be deemed a material breach of this Addendum and may result in the termination of this Addendum by the City. The City retains the right to inspect the papers of the Contractor's or its subcontractors' employees who perform any work or services pursuant to this Addendum to ensure compliance with these warranties.

FURTHER, to the extent applicable, the Contractor warrants that it is not participating and will not participate in prohibited activity in contravention of A.R.S. § 35-393.01.

FURTHER, to the extent applicable under ARIZ. REV. STAT. § 35-394, Contractor certifies that it does not currently, and agrees for the duration of this Agreement that it will not use (i) the forced labor of ethnic Uyghurs in the Peoples Republic of China ("ethnic Uyghurs"), (ii) any goods or services produced by the forced labor of ethnic Uyghurs, or (iii) any Contractors, subcontractors, or suppliers that use the forced labor or any goods or services produced by the forced labor of ethnic Uyghurs. If Contractor becomes aware that it is not in compliance with this paragraph, Contractor shall notify the City of the noncompliance within five (5) business days of becoming aware of it. If Contractor fails to provide a written certification that Contractor has remedied the noncompliance within one hundred eighty (180) days after that, this Agreement shall terminate unless the termination date of this Agreement occurs before the end of the remedy period, in which case this Agreement terminates on the Agreement termination date.

FURTHER, the Parties agree that the Addendum and Exhibits thereto shall be governed by State of Arizona law and suits pertaining to the Addendum and Exhibits thereto may only be brought in courts located in Maricopa County, Arizona.

FURTHER, all modifications, including but not limited to service additions and deletions, will be made in writing and with the written agreement of both parties.

FURTHER, in the event of any inconsistency between this Addendum, the 1Government Procurement Alliance (1GPA) and Paradise Valley Unified School District Contract and **Exhibit B**, the documents shall govern in that order.

CLICKWRAP TERMS EXCLUDED, in the event the Consultant's terms of sale or service were provided to the City only upon "acceptance" of a "clickwrap" or "clickthrough" agreement, such terms of sale or service shall not be binding upon the City. No oral agreement, "clickwrap" or "clickthrough" agreement or other understanding shall in any way modify a City issued or approved contract or the terms of this Cooperative Contract Purchase Addendum (CCPA).

THEREFORE, the Parties have executed this Addendum as of the date first set forth above.

CITY

THE CITY OF BUCKEYE,
an Arizona Municipal corporation

_____
Dan Cotterman, City Manager

ATTEST:

_____
Lucinda Aja, City Clerk

RECOMMENDED:

William Kauppi
_____
William Kauppi, Chief Financial Officer

APPROVED AS TO FORM:

_____
K. Scott McCoy, City Attorney

CONTRACTOR

CCS FACILITY SERVICES-ARIZONA INC.
a Delaware corporation

By: Steve Larson
_____

Title: EVP
_____

EXHIBIT A
TO
COOPERATIVE CONTRACT PURCHASE ADDENDUM
CONTRACT NO. 2025222

[The 1Government Procurement Alliance (1GPA) and Paradise Valley Unified School District Contract]

See following page(s).

Contract Extension/Amendment

March 7, 2024

CCS Facility Services
1165 S. Pennsylvania Street, suite 200
Denver, CO 80210

Attn: Steve Larson (slarson@ccsbts.com)

Re: Extension Agreement for Contract #20-01PV-04, Custodial, Grounds and Maintenance Services

The above referenced contract is hereby mutually extended for an additional one (1) year period until June 1, 2025. This is the fifth and final year of a five-year agreement. **Please indicate your desire to extend your contract by completing and emailing back the signed Contract Extension along with the following documentation:**

- ☐ **X** Updated Certificate of Insurance (see terms and conditions of contract to ensure compliance).
- ☐ Proof/Verification of ROC Licensing in good standing (if applicable).
- ☐ **N/A** Proof of any other applicable licensing related to your contract.
- ☐ Proof/Verification of good standing with Arizona Corporation Commission or other State's comparable Corporations/Business Division or Secretary of State (as applicable).
- ☐ **X** Updated Contact Information Sheet completed.

Please check ONE of the following appropriate boxes regarding pricing:

☐ No contract pricing updates. Current price on file is accurate.

☐ **X** Our contract pricing is based on a firm-fixed price list. We are providing an updated firm-fixed price list for 1GPA's approval with this extension.

☐ Our contract pricing is based on a percentage discount. We are providing new price lists for 1GPA's approval with this extension. *Note: Percentage Discounts remain the same as per contract terms and conditions.*

☐ We are aware of new price lists that will be available during the upcoming contract year. We will present those when received. Current price lists will remain on file until updated price lists are received and approved by 1GPA.

Please include a brief description of all the price updates below:
Pricing increases for 2024-2025 contract year.

It is the contractor's responsibility to keep all pricing up to date and on file with 1GPA. All price changes must be provided to 1GPA for review and utilizing the same format provided in the contractor's original proposal.

By signing this document, vendor certifies that neither it nor its principals are presently debarred, suspended, proposed for debarment, declared ineligible, or voluntarily excluded from participation in this transaction by any Federal department or agency; and in accordance with ARS § 35-394, the vendor is not currently and for the duration of the contract will not use the forced labor of ethnic Uyghurs in the People's Republic of China including goods, services, contractors, subcontractors or suppliers thereof.

In addition, please verify that your company is providing usage reports as per the terms of your contract. If you have any questions or concerns regarding these reports, please feel free to contact Michelle Aiken by email: maiken@1GPA.org.

Except as otherwise expressly provided in this amendment, all of the terms and conditions of the Contract remain unchanged and in full force and effect.

Vendor Acceptance/Signature: Stephen S. Larson	
Printed Name: Stephen S. Larson	
Title: Executive Vice President	Date: March 9, 2024
1GPA Authorized Signature: Christy Knorr	
Printed Name: Christy Knorr	
Title: President	Date: 04/04/2024
Paradise Valley Unified School District Authorized Signature: Eva Calles	
Printed Name: Eva Calles	
Title: Director of Purchasing	Date: 5/3/2024

The following is a Cooperative Solicitation, released via Paradise Valley Unified School District as the lead agency for 1Government Procurement Alliance:

Request for Proposal #20-01PV
Custodial, Grounds, and Maintenance Services

Proposal Due Date and Time: February 13, 2020 at 1:00 P.M. Arizona Time

RFP Opening Location: Paradise Valley Unified School District – Lead Agency
15002 N. 32nd Street
Phoenix, Arizona 85032
See enclosed information for submittal instructions.

Last Day for Questions: February 5, 2020

Pre-Proposal Conference: January 23, 2020 at 10:00 A.M.
Paradise Valley Unified School District
DAC Conference Room West
15002 N. 32nd Street
Phoenix, Arizona 85032

**Vendors who wish to participate remotely may contact Rebecca Seifert at rseifert@1gpa.org to request a virtual meeting ID and call in number.*

In accordance with the Arizona procurement code and rules, Competitive Sealed Proposals for the materials or services specified will be received by the 1GPA lead agency, at the above specified location, until the time and date cited. Proposals received by the correct time and date shall be opened and the name of each Offeror will be publicly read. All other information contained in the Proposal shall remain confidential until award is made.

Solicitations shall be in the actual possession of the 1GPA lead agency on or prior to the time and date, and at the location indicated above. Late solicitations shall not be considered.

Solicitations must be submitted in a sealed envelope with the Request for Proposal number and the Offerors name and address clearly indicated on the envelope. Additional instructions for preparing a solicitation are provided herein. Offerors are strongly encouraged to carefully read the entire solicitation document.

Questions regarding this Request for Proposal should be directed to: Rebecca Seifert, Procurement Specialist - 1GPA
Email: rseifert@1gpa.org
Phone: 480-524-2593

Claudia Leon
Claudia Leon, Director of Purchasing
Paradise Valley Unified School District (PVUSD)

Christy Knorr
Christy Knorr, Vice President
1Government Procurement Alliance (1GPA)

Date: January 9, 2020

TABLE OF CONTENTS

Documents Referenced	Page 3
Introduction	Page 4
FORM – Proposal and Acceptance	Page 5
Definition of Terms	Page 6
Uniform Instructions to Offerors	Page 7
Uniform Terms and Conditions	Page 12
Special Terms and Conditions	Page 20
Contract Goals	Page 26
Pre-Estimate Questionnaire (Example)	Page 27
Scope of Work	Page 29
Evaluation Criteria	Page 38
Submittal Requirements & Proposal Format	Page 39
FORM – Financial Disclosure Questionnaire	Page 43
FORM – Geographical Locations & Regions	Page 45
FORM – Non-Collusion Affidavit	Page 47
FORM – EDGAR Certifications	Page 48
FORM – Debarment Certification	Page 53
FORM – Antitrust Certification Statement - Texas	Page 54
FORM – MWBE	Page 55
FORM – Certificate of Insurance (Sample)	Page 56
FORM – W-9	Page 57
EXHIBIT A – Bonfire Submission Instructions	Page 58

DOCUMENTS REFERENCED

You may access a complete copy of the documents referenced within this solicitation at the following web addresses:

Arizona:

Arizona Revised Statutes (A.R.S.) is available at
http://www.azleg.state.az.us/ArizonaRevisedStatutes.asp

The Arizona School District Procurement Rules in the Arizona Administrative Code (A.A.C.) is available at
http://apps.azsos.gov/public_services/Title_07/7-02.pdf

All Other States:

For a full listing of Intergovernmental Purchasing Statutes by state, **Click Here** to be re-directed to 1GPA website available at:
http://1gpa.org/state-statutes/

Local Governments website (USA.gov): http://www.usa.gov/Agencies/Local_Government/Cities.shtml

Federal:

I.R.S. W-9 form (Request for Taxpayer I.D. Number) is available at
http://www.irs.gov/pub/irs-pdf/fw9.pdf

Education Department General Administrative Regulations (EDGAR), 2 C.F.R. §§ 200.318-326
https://www.gpo.gov/fdsys/pkg/CFR-2014-title2-vol1/xml/CFR-2014-title2-vol1-part200-subpartD.xml

INTRODUCTION

Who are we?

1Government Procurement Alliance (1GPA), is a non-profit national governmental purchasing cooperative which allows public agencies to take advantage of existing contracts to purchase the goods and services they need from local and national vendors.

Eligible using members include school districts, charter schools, universities, colleges, cities, towns, municipalities, counties, states, local governments, federal government, Native American communities, fire districts, and any other political subdivision.

What do we do?

We provide contracts for a broad range of commodities and services that are available to the Cooperative eligible members through a government purchasing cooperative or Interlocal agreement. All of our contracts are competitively procured and awarded in compliance with state statutes, procurement laws and regulations.

Contracts are approved and awarded by 1GPA's lead governmental entities and are only available for use and benefit of all entities complying with state procurement laws and regulations.

Why are we preferred?

The Cooperative's pooled purchasing power means public and private schools, cities, counties and state agencies, non-profits, as well as colleges, universities and Native American communities **can save actual budget dollars** on our contracts utilizing best business practices.

Our agency is dedicated to negotiating the best contracts with the best firms locally or nationally to ensure our members receive quality products and services at the best price.

We service our members by providing in-house knowledge of public procurement practices in conjunction with quality business practices to mainstream the purchasing process for large and complex solicitations that can take up to 6 to 12 months for our members on their own.

We pride our firm on our commitment to compliance, innovation, and collaboration.

As a government purchasing cooperative, 1GPA offers its Members access to a broad range of vendors whose goods and services have been competitively procured by 1GPA, in coordination with its governmental lead agencies. When conducting competitive solicitations, 1GPA takes all steps necessary to comply with federal, state and local procurement laws applicable to both the Lead Agency identified in the solicitation, as well as to 1GPA. Each Member must make its own independent determination as to (1) whether the Member may, under laws applicable to the Member, lawfully purchase particular goods or services through purchasing cooperatives, and (2) whether the Member must comply with any additional procedures required under laws applicable to the Member prior to completing a cooperative purchase. 1GPA makes no representations or warranties to its Members, or to any vendors, regarding such matters.

TAB 6 – RESPONSIVENESS

6.1 PROPOSAL CONTRACT AND ACCEPTANCE FORM

OFFEROR'S PROPOSAL AND CONTRACT ACCEPTANCE

The Undersigned hereby certifies understanding and compliance with the requirements in the General Terms and Conditions. Offeror further agrees to furnish the material and/or service in compliance with all terms, conditions, specifications, and amendments in the solicitation and any written exceptions in the Proposal.

26-2246912	2401 W Behrend Suite H-25
Federal Employer Identification Number	Address
CCS Facility Services	Phoenix, AZ 85027
Company Name	City, State Zip
Titus Gardner	602.404.3400
Printed Name	Company Telephone Number
Vice President	AP Specialist
Title	Accounting / AP Contact Name
clage@ccsbts.com	ap@ccsbts.com
Primary Email (for Contract Inquiries)	Accounting / AP Email

Authorized Signature

The Contractor shall not commence any billable work or provide any material or service under this contract until Contractor receives a purchase order/contract from a 1GPA member. The Contractor agrees to comply with the requirements of submitting Usage Reports and Purchase Orders and/or Contracts to 1GPA. The contractor shall provide monthly or quarterly (arrangements to be made with 1GPA) reconciliation reports based on all contract activity to 1GPA. Contractor will be invoiced from these reports. Invoices are due upon receipt.

1GPA'S PROPOSAL AND CONTRACT ACCEPTANCE

The Proposal is hereby accepted:

The Contractor is now bound to sell the materials and/or services offered to and accepted by 1GPA in accordance with the solicitation, including all terms, conditions, specifications, amendments, etc.

This contract shall henceforth be referred to as 20-01PV-04, Custodial, Grounds, and Maintenance Services.

Awarded this 26th day of March 2020

This contract shall be effective this 1st day of June 2020

1GPA

Signature: Christy Knorr Date: 3/27/2020

Printed Name: Christy Knorr Title: Vice President

Approved By: Paradise Valley Unified School District

Signature: Date: 3/27/2020

Printed Name: Claudia Leon Title: Director of Purchasing

DEFINITION OF TERMS

A complete list of definitions can be in the Arizona Administrative Code R7-2-1001. The terms listed below are defined as follows:

"Attachment" means any item the Solicitation requires the Offeror to submit as part of the Proposal.

"Contract" means the combination of the Solicitation, including the Special Instructions to Offerors, Special Terms and Conditions, and the Specifications and Statement or Scope of Work/Services; the Proposal and any Best and Final Offers; and any Solicitation Amendments or Contract Amendments, and Member purchase orders.

"*Contract Amendment*" means a written document signed by the 1GPA that is issued for the purpose of making changes in the Contract.

"Contractor" means any person who has a Contract with the 1GPA.

"Cost" means the aggregate cost of all materials and services, including labor performed by force account.

"Days" means calendar days and shall be computed pursuant to A.R.S. 1-243.

"Exhibit" means any item labeled as an Exhibit in the Solicitation or placed in the Exhibits section of the solicitation.

"Governing Body" means any group comprised of elected or appointed officials, such as School District Governing Boards, City Councils, County Supervisors, Board of Regents, etc., which has the authority to make fiduciary decisions for a Member organization.

"Gratuity" means a payment, loan, subscription, advance, deposit of money, services, or anything of more than nominal value, present or promised, unless consideration of substantially equal or greater value is received.

"Materials" means all property, including equipment, supplies, printing, insurance and leases of property but does not include land, a permanent interest in land or real property or leasing space.

"Member" means the non-profit entities, public and private schools (including independent school districts and charter schools), education service centers, colleges, universities, municipalities, counties, political subdivisions, and other governmental entities and agencies throughout the United States that have followed local governing authority allowing them to utilize contracting vehicles procured and administered by 1GPA.

"Offeror" means a person submitting a Proposal in response to a Request for Proposals

"Person" means any corporation, business, individual, union, committee, club, other organization or group of individuals.

"Purchase Order or PO" means the agreed-upon purchase order or other form of binding contract document between the 1GPA member and the Vendor which is used in making a purchase under a 1GPA contract.

"Responsible Bidder or Offeror" means a person who at the time of contract award has the capability to perform the Contract requirements with the integrity and reliability which will assure good faith performance.

"Responsive Bidder or Offeror" means a person who submits a bid or proposal which conforms in all material respects to the Invitation for Bids or Request for Proposals.

"Services" means the furnishing of labor, time or effort by a contractor or subcontractor which does not involve the delivery of a specific end product other than required reports and performance, but does not include employment agreements or collective bargaining agreements.

"Solicitation" means an Invitation for Bids ("IFB"), a Request for Proposal ("RFP"), or a Request for Qualification ("RFQ").

"Subcontract" means any Contract, express or implied, between the Contractor and another party or between a subcontractor and another party delegating or assigning, in whole or in part, the making or furnishing of any material or any service required for the performance of the Contract.

UNIFORM INSTRUCTIONS TO OFFERORS

1. **Inquiries**

A. **Duty to Examine** - It is the responsibility of each Offeror to examine the entire Solicitation, seek clarification in writing, and check its Proposal for accuracy before submitting the Proposal. Lack of care in preparing a Proposal shall not be grounds for withdrawing the Proposal after the Proposal due date and time nor shall it give rise to any Contract claim.

B. **Solicitation Contact Person** - Any inquiry related to a Solicitation, including any requests for or inquiries regarding standards referenced in the Solicitation, shall be directed solely to the Solicitation contact person.

C. **Submission of Inquiries -** Questions and/or clarifications concerning this RFP will be accepted in writing through February 5, 2020 by 5:00 p.m. Request may be transmitted via facsimile or email. Written responses to all written inquiries will be provided and distributed to all recipients of this RFP. Responses and addenda to this RFP, if necessary, are scheduled to be issued by February 6 by 5:00 p.m. No Offeror may rely upon oral responses made by any 1GPA employee or any representative. Questions and/or clarifications concerning this RFP shall be directed to Rebecca Seifert, Procurement Specialist, rseifert@1gpa.org or Fax 602-449-2081.

D. **Solicitation Amendments/Addenda -** The Solicitation shall only be modified by a Solicitation Amendment or Addendum. 1GPA will not be responsible for Offerors adjusting their proposal based on oral instructions by any member of 1GPA or lead District Personnel.

E. **Pre-Proposal Conference** - If a Pre-Proposal Conference has been scheduled under this Solicitation, the date, time, and location shall appear on the Solicitation cover sheet or elsewhere in the Solicitation. An Offeror should raise any questions it may have about the Solicitation or the procurement at that time. An Offeror may not rely on any verbal responses to questions at the conference. Material issues raised at the conference that result in changes to the Solicitation shall be answered solely through a written Solicitation Amendment or Addendum.

F. **Proposal Opening:** Proposals shall be opened on the date and time, and at the place designated on the cover page of this document, unless amended in writing by 1GPA. The name of each Offeror shall be read at this time. All Offers and any modifications and other information received in response to the Request for Proposals shall be shown only to authorized 1GPA personnel having a legitimate interest in the evaluation. After contract award, the Proposals and evaluation document shall be open for public inspection.

G. **Time Stamp**: Proposals will be time stamped when received. They will be accepted up to but no later than the time indicated in the Request for Proposal (RFP). Proposals received after the time stated in the RFP will not be considered and will remain unopened. Offeror assumes the risk of any delay in the U.S. Mail. Whether sent by mail or by means of personal delivery, the Offeror assumes responsibility for having his Proposal deposited on time at the place specified.

H. **Persons with Disabilities** - Persons with a disability may request a reasonable accommodation, such as a sign language interpreter, by contacting the appropriate Solicitation contact person. Requests shall be made as early as possible to allow time to arrange the accommodation.

2. **Proposal Preparation**

A. **Forms** - A Proposal shall be submitted either on the forms provided in this Solicitation or their substantial equivalent. Any substitute document for the forms provided in this Solicitation will be legible and contain the same information requested on the form.

B. **Typed or Ink Corrections -** The Proposal should be typed or in ink. Erasures, interlineations or other modifications in the Proposal should be initialed in ink by the person signing the Proposal. Modifications shall not be permitted after Proposals have been opened except as otherwise provided under R7-2-1030.

C. **Signature(s) on Proposals -** The Proposal and Contract Acceptance document must be submitted with an original ink signature by the person authorized to sign the Proposal. Failure to sign the Proposal and Contract Acceptance document may result in rejection of the Proposal.

D. **Exceptions to Terms and Conditions** - All exceptions included with the Proposal shall be submitted in a clearly identified separate section of the Proposal in which the Offeror clearly identifies the specific paragraphs of the Solicitation where the

exceptions occur. Any exceptions not included in such a section shall be without force and effect in any resulting Contract unless such exception is specifically referenced by the Procurement Officer in a written statement. The Offeror's preprinted or standard terms will not be considered as a part of any resulting Contract. All exceptions that are contained in the Proposal may negatively affect the solicitation evaluation based on the evaluation criteria as stated in the Solicitation or result in rejection of the Proposal. No exceptions included in the Proposal shall become part of the resulting Contract unless agreed and accepted to by 1GPA.

E. **Subcontracts -** Offeror shall clearly list any proposed subcontractors and the subcontractor's proposed responsibilities in the Proposal.

F. **Cost of Proposal Preparation** - 1GPA will not reimburse any Offeror the cost of responding to a Solicitation.

G. **Solicitation Amendments/Addenda -** Unless otherwise stated in the Solicitation, each Solicitation Amendment or Addendum shall be acknowledged by the person signing the Proposal. Failure to acknowledge a material Solicitation Amendment or Addendum or to follow the instructions for acknowledgement of the Solicitation Amendment/Addendum may result in rejection of the Proposal.

H. **Provision of Tax Identification Numbers -** Offerors are required to provide their Federal Tax Identification number, if applicable, in the space provided on the Proposal and Acceptance Form and provide the tax rate and amount, if applicable, on the Proposal Cost Sheet.

I. **Taxes**:

1. **Federal Excise Tax** - Arizona School Districts/Public Entities are exempt from certain Federal Excise Tax on manufactured goods.

2. **Transaction Privilege Taxes** - Arizona School Districts/Public Entities are subject to all applicable state and local transaction privilege taxes. Transaction Privilege Taxes in Arizona include State, County and City taxes.

3. **Property Taxes -** Arizona School Districts/Public Entities do not pay state property taxes.

4. **Taxes on Shipping -** Transaction privilege tax may not be collected on delivery charges to the Member's location if separately stated on the invoice.

5. **Payment of Taxes –** Member is responsible for payment for all taxes listed on the invoice. Contractor is responsible for collection such taxes and shall forward all taxes to the proper revenue office.

All Other States - Other states may have different tax requirements and laws. The tax laws in each state shall be followed by the awarded vendor. It is the responsibility of the vendor to be familiar with the laws and statutes in the state in which they are conducting business.

J. **Disclosure** - If the firm, business, or person submitting this Proposal has been debarred, suspended or otherwise lawfully precluded from participating in any public procurement activity, including being disapproved as a subcontractor with any Federal, state, or local government, or if any such preclusion from participation from any public procurement activity is currently pending, the Offeror shall fully explain the circumstances relating to the preclusion or proposed preclusion in the Proposal. The Offeror shall include a letter with its Proposal setting forth the name and address of the governmental unit, the effective date of this suspension or debarment, the duration of the suspension or debarment, and the relevant circumstances relating the suspension or debarment. If suspension or debarment is currently pending, a detailed description of all relevant circumstances including the details enumerated above must be provided.

K. **Solicitation Order of Precedence** - In the event of a conflict in the provisions of this Solicitation and any subsequent contracts, the following shall prevail in the order set forth below:

1. Addenda/Amendments;
2. Special Instructions, Terms and Conditions;

3. Uniform General Terms and Conditions;
4. Scope of Work/Specifications;
5. Attachments;
6. Exhibits;
7. Uniform Instructions to Offerors.

L. **Delivery -** Unless stated otherwise in the Solicitation, all prices shall be F.O.B. Destination and shall include all delivery and unloading at the destination(s). Contractor shall provide delivery of goods, and/or performance of services in accordance with the needs of the 1GPA Member. Products delivered must conform to the products listed under this contract and may not be substituted with nonconforming products. Contractor agrees to pay for and arrange for return of goods that are defective.

3. **Submission of Proposal**

A. **Sealed Envelope or Package -** Each Proposal shall be submitted to the location identified in this Solicitation, in a sealed envelope or package that identifies its contents as a Proposal and the Solicitation number to which it responds. The appropriate Solicitation number should be plainly marked on the outside of the envelope or package.

B. **Electronic Submission** - If determined by 1GPA that electronic submission of Proposals is advantageous, 1GPA will include the electronic submission requirements as well as if the electronic submission is mandatory or optional in the Special Instructions, Terms and Conditions section of the solicitation. Unless otherwise instructed, a facsimile or electronically submitted Proposal shall be rejected.

C. **Proposal Amendment or Withdrawal** - An Offeror may modify or withdraw a Proposal in writing at any time before Proposal opening if the modification or withdrawal is received before the Proposal due date and time at the location designated in the Solicitation. A Proposal may not be amended or withdrawn after the Proposal due date and time except as otherwise provided under R7-2-1044.

D. **Public Record/Confidentiality -** Under applicable law, all Proposals submitted and opened are public records and must be retained by 1GPA. Proposals shall be open to public inspection after Contract award, except for such Proposals deemed to be confidential by 1GPA pursuant to R7-2-1006.

If Offeror believes that its proposal contains trade secrets or other proprietary data not be disclosed as otherwise required by A.R.S. §39-121, a statement advising 1GPA of this fact shall accompany the Proposal, and the information shall be so identified wherever it appears. Requests to deem the entire Proposal as confidential, contract terms and conditions, pricing, and information generally available to the public are not considered confidential information under this Section.

E. **Certification** - By signing the Proposal and Acceptance form or other official contract form, the Offeror certifies that:

1. The prices have been arrived at independently, without consultation, communication or agreement, for the purpose of restricting competition, as to any matter relating to such prices with any other Offeror or with any competitor; the prices which have been quoted have not been nor will not be disclosed directly or indirectly to any other Offeror or to any competitor; nor attempt has been made or will be made to induce any person or firm to submit or not to submit, a Proposal for the purpose of restricting competition. It did not engage in collusion or other anti-competitive practices in connection with the preparation or submission of its Proposal; and

2. It does not discriminate against any employee, applicant for employment or person to whom it provides services because of race, color, religion, sex, national origin, or disability, and that it complies with all applicable federal, state, and local laws and executive orders regarding employment, Federal Executive Order 11246 and A.R.S. §41-1461 through 1465; and

3. The Offeror warrants that it and all proposed subcontracts will maintain compliance with Federal Immigration and Nationality Act (FINA), ARS § 41-4401 and § 23-214, and all other Federal immigration laws and regulations related to the immigration status of its employees which requires compliance with Federal immigration laws by employers, contractors and subcontractors in accordance with the E-Verify Employee Eligibility Verification Program; and

4. The Offeror has not given, offered to give, nor intends to give at any time hereafter any economic opportunity, future employment, gift, loan, gratuity, special discount, trip, favor, or service to a public servant in connection with the submitted Proposal. Failure to provide a valid signature affirming the stipulations required by this clause shall result in rejection of the Proposal. Signing the Proposal with a false statement shall void the Proposal, any resulting contract and may be subject to legal remedies provided by law; and

5. By submission of this Proposal, that neither it nor its principals is presently debarred, suspended, proposed for debarment, declared ineligible, or voluntarily excluded from participation in this transaction by any Federal department or agency; and

6. By submission of this Proposal, that no Federal appropriated funds have been paid or will be paid by or on behalf of the undersigned, to any person for influencing or attempting to influence an officer or employee of any agency, a Member of Congress, an officer or employee of Congress, or an employee of a member of Congress in connection with the awarding of a Federal contract, the making of a Federal grant, the making of a Federal loan, the entering into a Cooperative agreement, and the extension, continuation, renewal, amendment, or modification of a Federal Contract, grant, loan or cooperative agreement; and

7. In accordance with ARS § 35-392, the Offeror is in compliance and shall remain in compliance with the Export Administration Act.

8. The Offeror warrants that it and all proposed subcontracts are not currently engaged in, and agrees for the duration of this Contract/Agreement that it will not engage in, a boycott of Israel, as that term is defined in A.R.S. § 35-393 and Texas Gov't Code 2270.002.

4. **Additional Information**

A. **Unit Price Prevails -** Where applicable, in the case of discrepancy between the unit price or rate and the extension of that unit price or rate, the unit price or rate shall govern.

B. **Taxes -** The amount of any applicable transaction privilege or use tax of a political subdivision of the state of Arizona is not a factor in determining the most advantageous proposal.

C. **Late Proposals, Modifications or Withdrawals -** A Proposal, Modification or Withdrawal submitted after the exact Proposal due date and time shall not be considered except under the circumstances set forth in R7-2-1044.

D. **Disqualification** - The Proposal of an Offeror who is currently debarred, suspended or otherwise lawfully prohibited from any public procurement activity may be rejected.

E. **Proposal Acceptance Period** - An Offeror submitting a Proposal under this Solicitation shall hold its Proposal open for the number of days from the due date that is stated in the Solicitation. If the Solicitation does not specifically state a number of days for the Proposal acceptance, the number of days shall be ninety (90).

F. **Payment** - Payments shall comply with the requirements of A.R.S. Titles 35 and 41, Net 30 days. Upon receipt and acceptance of goods or services, the Contractor shall submit a complete and accurate invoice for payment within thirty (30) days.

G. **Waiver and Rejection Rights -** Notwithstanding any other provision of the solicitation, 1GPA reserves the right to:

1. Waive any minor informality;
2. Reject any and all Proposals or portions thereof; or
3. Cancel the Solicitation.

5. **Award**

A. **Number or Types of Awards** - Where applicable, the 1GPA reserves the right to make multiple awards or to award a Contract by individual line item, by a group of line items, by an incremental award, by region, or by location, as indicated

within the Special Instructions, Terms and Conditions. The award will be limited to the least number of Offerors that 1GPA determines is necessary to meet the needs of its Members.

B. **Contract Inception -** A Proposal does not constitute a Contract nor does it confer any rights on the Offeror to the award of a Contract. A Contract is not created until the Proposal is accepted in writing by 1GPA with an authorized signature on the Proposal and Acceptance form. A letter or other notice of award or of the intent to award shall not constitute acceptance of the Proposal.

C. **Effective Date -** The effective date of this Contract shall be the date that 1GPA signs the Proposal and Acceptance form or other official contract form, unless another date is specifically stated in the Contract.

6. **Protests**

A protest shall comply with and be resolved according to Arizona Department of Education School District Procurement Code Rule A.A.C. R7-2-1141 through R7-2-1153. Protests shall be in writing and be filed with the lead agency representative, Claudia Leon, Director of Purchasing.

A. Protest shall include:

1. The name, addresses, and telephone number of the interested party;
2. The signature of the interested party or the interested party's representative;
3. Identification of the purchasing agency and the Solicitation or Contract number;
4. A detailed statement of the legal and factual grounds of the protest including copies of relevant documents; and
5. The form of relief requested.
6. The interested party shall supply promptly any other information requested by 1GPA or lead agency.

B. Protests based upon alleged improprieties in a solicitation that are apparent before the due date and time for responses to the Solicitation, shall be filed before the due date and time for responses to the Solicitation.

C. In cases other than those covered in section B of the section, the interested party shall file the protest within 10 days after 1GPA or lead agency makes the procurement file available for public inspection.

D. The interested party may file a written request for an extension of the time limit for protest filing. The written request for an extension shall be filed with the 1GPA Representative before the expiration of the time limit and shall set forth good cause as to the specific action or inaction of 1GPA that resulted in the interested party being unable to file the protest within the 10 days. The 1GPA representative shall approve or deny the request in writing, state the reasons for the determination, and, if an extension is granted, set forth a new date for submission of the filing.

1. **Cooperative Purchasing**

A. **Cooperative Purchasing -** This contract is based on the need for 1GPA to provide the economic benefits of volume purchasing and reduction in administrative costs through cooperative purchasing to schools and other Members. Although contractors may restrict sales to certain public units (e.g. state agencies, local government units), any contract that prohibits sales from being made to public school districts may not be considered. Sales without restriction to any members are preferred.

B. **Cooperative Purchasing Agreements -** Cooperative Purchasing Agreements between 1GPA and its Members have been established under all procurement laws.

C. **Cooperative Purchasing Contracts** - Offeror agrees all prices, terms, warranties, and benefits granted by Offeror to Members through this contract are comparable to or better than the equivalent terms offered by Offeror to any present customer meeting the same qualifications or requirements.

Nothing in this solicitation is intended to establish a most favored customer relationship between 1GPA and contractor. Contractor may respond to any solicitation without regard to this contract. If contractor offers lower prices to any of its other customers, it may lower its prices to 1GPA at the same time by written notice.

D. **Non-Exclusive Contract -** Any contract resulting from this Solicitation shall be awarded with the understanding and agreement that it is for the sole convenience of 1GPA members. 1GPA and its membership reserve the right to obtain like goods and services from other sources.

E. **Lead Agency** - A Lead Agency is a well-established and well respected government agency who facilitates the competitive bidding process by being a part of the process from start to finish. The Lead Agency also provides Board Approval for the award of contracts resulting from each Solicitation. The Lead Agency for this RFP is Paradise Valley Unified School District.

2. **Contract Interpretation**

A. **Application of Law -** The Arizona Procurement Code, Title 41, Chapter 23, applies to this Contract including, where applicable, the Uniform Commercial Code as adopted by the State of Arizona and the Arizona School District Procurement Code, Arizona Revised Statutes (A.R.S.) 15-213, and its implementing rules, Arizona Administrative Code (A.A.C.) Title 7, Chapter 2, Articles 10 and 11.

For all other states this procurement shall be governed by, construed, and enforced in accordance with the laws of each state in which 1GPA is conducting business under this contract. It is the responsibility of the awarded vendor and member to ensure this solicitation and ensuing contract complies with the State laws in which they are conducting business regarding use of a cooperative contract.

B. **Implied Contract Terms -** Each Provision of law and any terms required by law to be in this Contract are a part of this Contract as if fully stated in it.

C. **Relationship of Parties** - Vendors receiving contracts under this solicitation are independent contractors. Neither party to this contract, nor any Member, shall be deemed to be the employee or agent of the other party to the contract.

D. **Severability -** The provisions of this Contract are severable to the extent that any provision or application held to be invalid shall not affect any other provision or application of the Contract.

E. **No Parol Evidence** - This Contract is intended by the parties as a final and complete expression of their agreement. No course of prior dealings between the parties and no usage of the trade shall supplement or explain any terms used in this document.

F. **No Waiver -** Either party's failure to insist on strict performance of any term or condition of the Contract shall not be deemed waiver of that term or condition even if the party accepting or acquiescing in the nonconforming performance knows of the nature of the performance and fails to object to it.

3. **Contract Administration and Operation**

A. **Records** - Under A.R.S. § 41-2548, the Contractor shall retain and shall contractually require each Subcontractor to retain all data and other records ("records") relating to the acquisition and performance of the Contract for a period of five years after the completion of the Contract.

B. **Audit** - At reasonable times during the term of this Contract and five (5) years thereafter, the Contractor's or any Subcontractor's books and records shall be subject to audit by 1GPA or Member and, where applicable, the Federal Government, to the extent that the books and records relate to the performance of the Contract or Subcontract.

C. **Inspection and Testing -** The Contractor agrees to permit access to its facilities, Subcontractor facilities and the Contractor's processes for producing the materials, at reasonable time for inspection of the materials and services covered under this Contract. 1GPA or its Members shall also have the right to test at its own cost the materials to be supplied under this Contract. Neither inspection at the Contractor's facilities nor testing shall constitute final acceptance of the materials. If 1GPA or Member determines non-compliance of the materials, the Contractor shall be responsible for the payment of all costs incurred by 1GPA or Member for testing and inspection.

D. **Notices -** Notices to the Contractor required by this Contract shall be made by 1GPA to the person indicated on the Proposal and Acceptance form submitted by the Contractor unless otherwise stated in the Contract. Notices to 1GPA required by the Contract shall be made by the Contractor to the Solicitation Contact Person indicated on the Solicitation cover sheet, unless otherwise stated in the Contract. An authorized Procurement Officer and an authorized Contractor representative may change their respective person to whom notices shall be given by written notice and an Amendment to the Contract shall not be necessary.

E. **Advertising and Promotion of Contract** - Offeror shall not advertise or publish information concerning this solicitation prior to an award being announced by 1GPA. After award, contractor(s) may advertise the availability of products and services to Member. Any promotional marketing materials using the 1GPA logo must be approved by 1GPA in advance.

F. **Administration Fee -** 1GPA has an Administrative Fee of .01 (1%). The Administrative Fee shall be included in the offeror's net pricing and is the responsibility of the contractor. Vendor shall not add the administration fee to approved contract prices post award. The Administrative Fee shall be a part of the Vendor's unit prices and is not to be charged directly to the customer in the form of a separate line item.

G. **Usage Reports –** The Usage Report will be the established communication between the awarded contractor and 1GPA of all contract activity. The contractor shall provide contract Usage Reports to 1GPA on a regular schedule as established by the contractor. 1GPA will accept Monthly or Quarterly reporting arrangements which shall be made at the time of contract award.

H. **Submission of Usage Reports –** Within ten (10) days following the end of the arranged reporting schedule, the contractor shall submit their Usage Report electronically via email to: cknorr@1gpa.org.

I. **Purchase Orders/Contracts -** All purchase orders and/or contracts issued to the contractor in reference to 1GPA shall be submitted at the same time as the Usage Report. All purchase orders and/or contracts should be zipped in a single file and submitted as an attachment in the same email as the usage report in which they are referenced. 1GPA is audited on an annual basis & documentation is necessary for compliance. Failure to submit purchase orders and/or contracts may result in contract cancellation.

J. **Invoicing of Administration Fee –** Upon receipt of contractor's Usage Report, 1GPA will generate an invoice which is calculated as: Administrative Fee (1%) multiplied by the Total Sales Transactions as stated in the Usage Report. Contractor's failure to remit administrative fees in a timely manner consistent with the contract's requirements may result in 1GPA exercising any recourse available under the contract or as provided for by law.

Administrative Fees shall be paid to "1GPA" and mailed to:

1910 W. Washington Street
Phoenix, AZ 85009

4. **Costs and Payments**

A. **Ordering Procedures** - Purchase Orders are issued by 1GPA members to the Vendor according to this Contract. Members and Vendors must send Purchase Orders to 1GPA at cknorr@1gpa.org.

B. **Billings -** Contractor shall invoice Member after delivery of goods and/or services. All invoices shall list the applicable Member purchase order and 1GPA contract number. Contractor will invoice Member directly.

C. **Payment -** Payment terms are Net thirty (30) from receipt of Contractor's invoice

D. **Progress Payments -** 1GPA will permit Members to make progress payments under the following conditions:
1. Member and Contractor agree to the terms of the progress payments prior to issuing a purchase order
2. Purchase order describes the amounts or percentages and the dates or frequency of payments
3. Payments are made in full compliance with Member's local governing entity rules

E. **Tax Indemnification** - Contractor and all Subcontractors shall pay all federal, state, and local taxes applicable to its operation and any persons employed by the Contractor. Contractor shall, and require all Subcontractors to hold the Member harmless from any responsibility for taxes, damages and interest, if applicable, contributions required under federal, and/or state and local laws and regulations and any other costs including transaction privilege taxes, unemployment compensation insurance, Social Security and Worker's Compensation.

F. **IRS W-9** - In order to receive payment under any resulting Contract, Contractor shall have a current I.R.S. W-9 Form on file with each Member.

G. **Availability of Funds for the Next Fiscal Year** - Funds may not presently be available for performance under this Contract beyond the current fiscal year. No legal liability on the part of the Member for any payment that may arise under this Contract beyond the current fiscal year until funds are made available for performance of the Contract. It is the responsibility of the Member to make reasonable efforts to secure such funds.

5. **Contract Changes**

A. **Amendments -** The Contract may be modified only through a Contract Amendment within the scope of the Contract signed by the Procurement Officer. Changes to the Contract, including the addition of work or materials, the revision of payment terms, or the substitution of work or materials, directed by an unauthorized employee or made unilaterally by the Contractor are violations of the Contract and or applicable law. Such changes, including unauthorized written Contract Amendments, shall be void and without effect, and the Contractor shall not be entitled to any claim and this Contract based on those changes.

B. **Subcontracts** - The Contractor shall not enter into any Subcontract under this Contract without the advance written approval of the Procurement Officer. The Subcontract shall incorporate by reference the terms and conditions of this Contract.

C. **Assignment and Delegation** - Contractor shall not assign any right or interest nor delegate any duty under this Contract without the prior written approval of 1GPA. 1GPA shall not unreasonably withhold approval.

D. **Novation** - If contractor sells or transfers all assets or the entire portion of the assets used to perform this contract, a successor in interest must guarantee to perform all obligations under this contract. 1GPA reserves the right to accept or reject any new party. A simple change of name agreement will not change the contractual obligations of contractor.

E. **Contract Placed on Hold -** 1GPA shall have the ability to place a contract on hold, if it is deemed necessary to address ongoing problems with an awarded contract. Details of the decision to place the contract on hold shall be provided in a written deficiency notice. A reasonable amount of time shall be provided to contractor to address issues in the written deficiency notice.

6. **Risk and Liability**

A. **Risk of Loss** - Contractor shall bear all loss of conforming material covered under this Contract until received by authorized personnel at the location designated in the purchase order or Contract. Mere receipt does not constitute final acceptance. The risk of loss for nonconforming materials shall remain with the Contractor regardless of receipt.

B. **General Indemnification** - To the extent permitted by law, 1GPA and its Members shall be indemnified and held harmless by the Contractor for its vicarious liability as result of entering into this Contract. Each party to this Contract is responsible for its own negligence.

C. **Indemnification - Patent and Copyright** - To the extent permitted by law, Contractor shall indemnify and hold harmless 1GPA and its Members against any liability, including costs and expenses, for infringement of any patent, trademark, or copyright arising out of Contract performance or use by the 1GPA or Member of materials furnished or work performed under this Contract. 1GPA or Member shall reasonably notify the Contractor of any claim for which it may be liable under this paragraph.

D. **Force Majeure**

1. Except for payment of sums due, neither party shall be liable to the other nor deemed in default under this Contract if and to the extent that such party's performance of this Contract is prevented by reason of force majeure. The term "*force majeure"* means an occurrence that is beyond the control of the party affected and occurs without its fault or negligence. Without limiting the foregoing, force majeure includes acts of God; acts of the public enemy; war; riots; strikes; mobilization; labor disputes; civil disorders; fire; flood; lockouts; injections-intervention-acts; or failures or refusals to act by government authority; and other similar occurrences beyond the control of the party declaring force majeure which such party is unable to prevent by exercising reasonable diligence.

2. Force Majeure shall <u>not</u> include the following occurrences:

a. Late delivery of equipment or materials caused by congestion at a manufacturer's plant or elsewhere, or an oversold condition of the market; or
b. Late performance by a Subcontractor unless the delay arises out of a force majeure occurrence in accordance with this force majeure term and condition; or
c. Inability of either the Contractor or any Subcontractor to acquire or maintain any required insurance, bonds, licenses, or permits.

3. If either party is delayed at any time in the progress of the work by force majeure, the delayed party shall notify the other party in writing of such delay, as soon as is practicable and no later than the following working day, of the commencement thereof and shall specify the causes of such delay in such notice. Such notice shall be delivered or mailed certified-return receipt, and shall make a specific reference to this article, thereby invoking its provisions. The delayed party shall cause such delay to cease as soon as practicable and shall notify the other party in writing when it has done so. The time of completion shall be extended by Contract Amendment for a period of time equal to the time that results or effects of such delay prevent the delayed party from performing in accordance with this Contract.

4. Any delay or failure in performance by either party hereto shall not constitute default hereunder or give rise to any claim for damages or loss of anticipated profits if, and to the extent that such delay or failure is caused by force majeure.

7. **Warranties**

A. **Liens** - The Contractor warrants that the materials supplied under this Contract are free of liens.

B. **Quality -** Unless otherwise modified elsewhere in these terms and conditions, the Contractor warrants that, for one year after acceptance by the School District/Public Entity of the materials or services, they shall be:

1. A quality to pass without objection in the trade under the Contract description;

2. Fit for the intended purposes for which the materials or services are used;

3. Within the variations permitted by the Contract and are of even kind, quality, and quality within each unit and among all units;

4. Adequately contained, packaged and marked as the Contract may require; and

5. Conform to the written promises or affirmations of fact made by the Contractor.

C. **Fitness -** Contractor warrants that any material or service supplied to 1GPA or its Members shall fully conform to all requirements of the contract and all representations of the Contractor, and shall be fit for all purposes and uses required by the Contract.

D. **Inspection/Testing -** The warranties set forth in this section shall not be affected by inspection or testing of, or payment for the materials or services by 1GPA Members.

E. **Compliance with Applicable Laws** - The materials and services supplied under this Contract shall comply with all applicable federal, state and local laws, and the Contractor shall maintain all applicable licenses and permits.

F. **Survival of Rights and Obligations after Contract Expiration or Termination**

1. Contractor's Representations and Warranties. All representations and warranties made by the Contractor under this Contract shall survive the expiration of termination hereof. In addition, the parties hereto acknowledge that pursuant to A.R.S. § 12-510, except as provided in A.R.S. § 12-529, 1GPA and its Members are not subject to or barred by any limitations of actions prescribed in A.R.S. Title 12, Chapter 5.

2. Purchase Orders. The Contractor shall, in accordance with all terms and conditions of the Contract, fully perform and shall be obligated to comply with all purchase orders received by the Contractor prior to the expiration or termination hereof, unless otherwise directed in writing by the Procurement Officer, including, without limitation, all purchase orders received prior to but not fully performed and satisfied at the expiration or termination of this Contract.

8. **Contractual Remedies**

A. **Right to Assurance** - If 1GPA in good faith has reason to believe that the Contractor does not intend to, or is unable to perform or continue performing under this Contract, 1GPA may demand in writing that the Contractor give a written assurance of intent or ability to perform. Failure by the Contractor to provide written assurance within the number of days specified in the demand may, at 1GPA's option, be the basis for terminating the Contract under the Uniform General Terms and Conditions.

B. **Nonconforming Tender -** Materials supplied under this Contract shall fully comply with the Contract. The delivery of materials or a portion of the materials in an installment that do not fully comply constitutes a breach of Contract. On delivery of nonconforming materials, 1GPA may terminate the Contract for default under applicable termination clauses in the Contract, exercise any of its remedies under the Uniform Commercial Code, or pursue any other right or remedy available to it.

C. **Right of Offset -** 1GPA and its Members shall be entitled to offset against any sums due the Contractor, any expenses or costs incurred or damages assessed by 1GPA or its Members concerning the Contractor's nonconforming performance or failure to perform the Contract, including expenses, costs and damages described in the Uniform General Terms and Conditions.

9. **Contract Termination**

A. **Cancellation for Conflict of Interest -** Pursuant to A.R.S. 38-511 1GPA may cancel this Contract within three (3) years after Contract execution without penalty or further obligation if any person significantly involved in initiating, negotiating, securing, drafting, or creating the Contract on behalf of 1GPA is, or becomes at any time while the Contract or an extension the Contract is in effect, an employee of or a consultant to any other party to this Contract with respect to the subject matter of the Contract. The cancellation shall be effective when the Contractor receives written notice of the cancellation unless the notice specifies a later time.

B. **Gratuities -** 1GPA may terminate this Contract if it is determined that gratuities were offered or given by the Contractor or a representative of the Contractor to any officer or employee of 1GPA for the purpose of influencing the outcome of the procurement or securing the Contract, an Amendment to the Contract, or favorable treatment concerning the Contract, including the making of any determination or decision about Contract performance.

C. **Suspension or Debarment** - 1GPA may, by written notice to the Contractor, immediately terminate this Contract if 1GPA determines that the Contractor has been disbarred, suspended or otherwise lawfully prohibited from participating in any public procurement activity, including but not limited to, being disapproved as a Subcontractor of any public procurement unit or other governmental body.

D. **Termination for Convenience -** 1GPA reserves the right to terminate the Contract, in whole or in part at any time, when in the best interests of its Members without penalty recourse. The Contractor shall be entitled to receive just and equitable compensation for work in progress, work completed, and materials accepted before the effective date of the termination.

E. **Cancellation for Non-Performance or Contractor Deficiency** - 1GPA may terminate any contract if Members have not used the contract, or if purchase volume is determined to be "low volume" in any 12-month period. 1GPA reserves the right to cancel the whole or any part of this contract due to failure by contractor to carry out any obligation, term or condition of the contract. 1GPA may issue a written deficiency notice to contractor for acting or failing to act in any of the following:

1. Providing material that does not meet the specifications of the contract;
2. Providing work and/or material that was not awarded under the contract;
3. Failing to adequately perform the services set forth in the scope of work and specifications;
4. Failing to complete required work or furnish required materials/product within a reasonable amount of time;
5. Failing to make progress in performance of the contract and/or giving 1GPA reason to believe that the contractor will not or cannot perform the requirements of the contract; and or
6. Performing work or providing services under the contract prior to receiving a 1GPA reviewed purchase order for such work.

Upon receipt of a written deficiency notice, contractor shall have ten (10) days to provide a satisfactory response to 1GPA. Failure to adequately address all issues of concern may result in contract cancellation. Upon cancellation under this paragraph, all goods, materials, work, documents, data and reports prepared by contractor under the contract shall become the property of the Member on demand.

F. **Contractor Cancellation -** Contractor may cancel this contract at any time upon thirty (30) days prior written notice to 1GPA or on the yearly anniversary of the contract. Termination shall have no effect on projects in progress at the time the notice of cancellation is received by 1GPA.

G. **Continuation of Performance through Termination -** The Contractor shall continue to perform, in accordance with the requirements of the Contract, up to the date of termination, as directed in the termination notice.

10. **Contract Claims**

Contract claims and controversies under this Contract shall be resolved according to Arizona Department of Education School District Procurement Code Rule A.A.C. R7-2-1155 through R7-2-1159.

Any dispute involving a 1GPA member and Vendor outside of Arizona shall be governed by the laws of the state of the 1GPA member, without regard to its provisions on conflicts of laws, and exclusive jurisdiction and venue shall lie in the city, county, and state of the 1GPA member.

11. **Federal and State Requirement**

A. **Compliance with Federal and State Requirements -** Vendor shall comply with all applicable federal, state, and local laws, statutes, ordinances, standards, orders, rules, and regulations, including, as applicable, workers' compensation laws, minimum and maximum salary and wage statutes and regulations, prompt payment and licensing laws and regulations.

Vendor shall comply, when working on any federally assisted projects with the following:

1. The Contract Work hours and Safety Standards Act, (40 U.S.C. §3701 – 3708; 29 CFR Part 5)
2. Davis-Bacon Act, (40 U.S.C. §276a / 29 CFR Part 5)
3. Copland Anti-Kickback Act, (18 U.S.C. §874 / 29 CFR Part 5)
4. Equal Opportunity Employment requirements (Executive Order 11246 and 11375 / 41CFR Chapter 60)

5. McNamara-O'Hara Service Contract Act (41 U.S.C. 351),
6. Section 306 of the Clean Air Act (42 U.S.C. § 1857h,
7. Section 508 of the Clean Water Act (33 U.S.C. § 1368),
8. Executive Order 11738, Environmental Protection Agency regulations (40 CFR Part 15).
9. Uniform Administrative Requirements, Cost Principles, and Audit Requirements for Federal Awards (2 CFR Part 200)
10. Education Department General Administrative Regulations, 2 C.F.R. Parts 200 and 3474, and 34 C.F.R. Parts 75-77 and 81 ("EDGAR"),
11. Mandatory standards and policies relating to energy efficiency which are contained in the state energy conservation plan issued in compliance with the Energy Policy and Conservation Act (Pub. L. 94-163, 89 Stat. 871)
12. All applicable requirements and regulations, including those related to reporting, patent rights, copyrights, data rights and those mandated by federal agencies making awards of federal funds to 1GPA members.

B. **Offshore Performance** - Due to security and identity protection concerns, direct services under any subsequent contract shall be performed within the borders of the United States. Any services that are described in the specifications or scope of work that directly serve the school district(s) or charter school(s) or its clients and may involve access to secure or sensitive data or personal client data or development or modification of software for the State shall be performed within the borders of the United States. Unless specifically stated otherwise in the specifications, this definition does not apply to indirect or "overhead" services, redundant back-up services or services that are incidental to the performance of the contract. This provision applies to work performed by subcontractors at all tiers.

C. **Contractor's Employment Eligibility** - By entering the contract, Contractor warrants compliance with ARS § 41-4401, ARS § 23-214, the Federal Immigration and Nationality Act (FINA), and all other federal immigration laws and regulations. 1GPA or Member may request verification of compliance from any Contractor or subcontractor performing work under this Contract. 1GPA or Member reserves the right to confirm compliance in accordance with the applicable laws. Should 1GPA or Member suspect or find that the Contractor or any of its subcontractors are not in compliance, 1GPA or Member may pursue any and all remedies allowed by law, including, but not limited to: suspension of work, termination of the Contract for default and suspension, and/or debarment of the Contractor. All costs necessary to verify compliance are the responsibility of the Contractor.

D. **Davis-Bacon –** For Federally funded projects subject to the Davis-Bacon Act, the Member shall specify the applicable Davis-Bacon wage decision, prior to the contractor providing a firm price quotation for the proposed project. The wage decision shall be identified by the WD Number, modification number, and date of the wage decision.

E. **Fingerprint and Background Checks** - In accordance with ARS § 15-512(H), a contractor, subcontractor or vendor, any employee of a contractor, subcontractor or vendor who is contracted to provide services on a regular basis at an individual school may be required to obtain a valid fingerprint clearance card pursuant to Title 41, Chapter 12, Article 3.1. An exception to this requirement may be made as authorized in governing board policy of the Member District.

F. **Terrorism Country Divestments -** Per ARS § 35-392, 1GPA and its Members are prohibited from purchasing from a company that is in violation of the Export Administration Act.

G. **Registered Sex Offender Restrictions -** For work to be performed at schools, contractor agrees that no employee or employee of a subcontractor who has been adjudicated to be a registered sex offender will perform work at any time when students are or are reasonably expected to be present. Contractor agrees that a violation of this condition shall be considered a material breach and may result in the cancellation of the purchase order at the Member's discretion. Contractor must identify any additional costs associated with compliance of this term. If no costs are specified, compliance with this term will be provided at no additional charge.

H. **Affordable Care Act** - Vendor understands and agrees that it shall be solely responsible for compliance with the Patient Protection and Affordable Care Act, Public Law 111-148 and the Health Care Education Reconciliation Act, Public Law 111-152 (collectively the Affordable Care Act "ACA"). Contractor shall bear sole responsibility for providing health care benefits for its employees who provide services to the Member as required by state or federal law.

I. **Boycott of Israel –** Arizona public entities and other states as applicable, the member may not enter into a contract with a company that is currently engaged in, and agrees for the duration of the contract to not engage in, a boycott of Israel.

J. **EDGAR –** When a 1GPA Member seeks to procure goods and services using funds under a federal grant or contract, specific federal laws, regulations, and requirements may apply in addition to those under state law. This includes, the procurement standards of the **Uniform Administrative Requirements, Cost Principles and Audit Requirements for Federal Awards, 2 C.F.R. 200 (EDGAR).** All Vendors submitting proposals must complete the EDGAR Vendor Certification Form contained within this document.

K. **Minority Businesses** – 1GPA and its Lead Agency have taken all necessary affirmative steps to assure minority businesses, women's business enterprises, and labor surplus area firms are notified of any bidding opportunities when possible according to 2 CFR Part 200.321.

L. **Civil Rights Compliance** - In accordance with 7 CFR Part 210.23, Federal civil rights law and U.S. Department of Agriculture (USDA) civil rights regulations and policies, the USDA, its Agencies, offices, and employees, and institutions participating in or administering USDA programs are prohibited from discriminating based on race, color, national origin, sex, disability, age, or reprisal or retaliation for prior civil rights activity in any program or activity conducted or funded by USDA.

M. **Texas House Bill 1295 Certificate of Interested Parties –** For contract entered into or after January 1, 2016, Texas Government Code Chapter 2252.908 (H.B. 1295) states that a Texas governmental entity or state agency may not enter into a contract unless the business entity submits a disclosure of interested parties to the governmental entity or state. The law applies only to a contract that either (1) requires an action or vote by the governing body or (2) has a value of at least $1 million. Information from the Commission regarding the requirements, including rules and filing information, are available at the following links:

https://www.ethics.state.tx.us/tec/1295-info.htm
https://www.ethics.state.tx.us/whatsnew/faq_form1295.html
https://www.ethics.state.tx.us/whatsnew/elf_info_form1295.htm

It is the responsibility of vendors to determine the applicability of, and comply with, all disclosure laws of House Bill 1295.

SPECIAL TERMS AND CONDITIONS

1. **TERM OF CONTRACT:** It is 1GPA's intent to award a multi-term contract. The initial term of the resultant contract shall start on June 1, 2020 and shall continue for a period of one (1) year thereafter, unless terminated, cancelled or extended as otherwise provided herein.

2. **CONTRACT EXTENTION:** 1GPA reserves the right to unilaterally extend the period of any resultant contract month to month beyond the stated expiration date if that is determined to be in the best interests of Members. In addition, by mutual written agreement, any resultant contract may be extended for a supplemental period up to a maximum of forty-eight (48) months in twelve (12) month increments.

3. **RENEWAL OF CONTRACT:** Conditions for renewal of the contract shall include, but are not limited to: contract usage, satisfactory performance of services during the preceding contract term, ability to continue to provide satisfactory services, continued adherence to the contract requirements, and continued competitive prices for the materials and services provided under the contract.

4. **CONTRACT TYPE**: The term contract shall be a fixed price for the term of the contract with indefinite quantities.

5. **FORM OF CONTRACT:** The form of contract for this Solicitation shall be the Request for Proposal, the awarded Proposal(s) and Best and Final Offer(s), and properly issued purchase orders incorporating each member's specific policies and P.O. terms and conditions referencing the requirements of the Request for Proposals. If a firm submitting a Proposal requires 1GPA and/or Member to sign an additional agreement, a copy of the proposed agreement must be included with the Proposal. Partial offers will be considered for contract award.

6. **VENDOR CONTRACT DOCUMENTS:** 1GPA will review proposed vendor contract documents. Vendor's contract document shall not become part 1GPA's contract with vendor unless and until an authorized representative of 1GPA reviews and approves it. The solicitation terms and conditions contained within this solicitation will prevail and supersede any inconsistent terms and conditions in your firm's agreement.

7. **SUPPLEMENTAL AGREEMENTS:** The 1GPA Member and Contractor may enter into a separate supplemental agreement to further define the level of service requirements over and above the minimum defined in this solicitation such as invoice requirements, on campus service specifics, etc. Any supplemental agreement developed as a result of this RFP is exclusively between the Member and Contractor. 1GPA, its agents, members and employees shall not be made party to any claim for breach of such agreement. Any supplemental agreement between the Member and Contractor is exclusively between the Member and the Contractor and will be subject to immediate cancellation by the Member (without penalty) if, in the opinion of the Member, the quality, service and specification requirements and/or the terms and conditions are not maintained as stated in the supplemental agreement.

8. **PROPOSAL ACCEPTANCE PERIOD**: In order to allow for an adequate evaluation, 1GPA requires a Proposal in response to this Solicitation to be valid and irrevocable for ninety (90) days after the opening time and date.

9. **PRE-PROPOSAL CONFERENCE**: Prospective Offerors are invited to attend a pre-proposal conference. The date, time and location of this conference are indicated below. The purpose of this conference will be to clarify the contents of this Solicitation in order to prevent any misunderstanding of 1GPA's position. Any doubt as to the requirements of this Solicitation or any apparent omission or discrepancy should be presented to 1GPA at this conference. 1GPA will then determine the appropriate action necessary, if any, and issue a written amendment to the solicitation. Oral statements or instructions shall not constitute an amendment to this solicitation.

   Conference Date: January 23, 2020
   Conference Time: 10:00 AM

Conference Location: Paradise Valley Unified School District
DAC Conference Room West
15002 North 32nd Street
Phoenix, AZ 85032

Vendors who wish to participate remotely may contact Rebecca Seifert at rseifert@1gpa.org to request virtual meeting ID and call in number.

10. RESPONSE FORMAT: All Proposal responses are to be in the same form as this Request for Proposal. Address each requirement in the same order as has been requested.

11. ELECTRONIC SUBMITTAL - OPTIONAL: An electronic submission is also requested but **optional**. The electronic submission is to be uploaded online through BONFIRE. Submittal instructions for BONFIRE are found on the last page of this document under Exhibit A.

12. TIME STAMP: Proposals will be time stamped when received. They will be accepted up to but no later than the time indicated in the Request for Proposal (RFP). Proposals received after the time stated in the RFP will not be considered and will remain unopened. Offeror assumes the risk of any delay in the U.S. Mail. Whether sent by mail or by means of personal delivery, the Offeror assumes responsibility for having his Proposal deposited on time at the place specified.

13. AWARD: Award(s) will be made to the responsive and responsible Offeror(s) whose Proposal(s) is (are) determined in writing to be most advantageous to 1GPA for its Members based on the factors set forth in the Request for Proposals. No other factors or criteria may be used in the evaluation. The amount of any applicable transaction privilege or use tax of a political subdivision of this state is not a factor in determining the most advantageous proposal. The procurement file shall contain the basis on which the award is made.

14. DISCUSSIONS: In accordance with R7-2-1047, after the initial receipt of Proposals, 1GPA reserves the option to conduct discussions with those Offerors who submit Proposals determined by 1GPA to be reasonably susceptible of being selected for award. Discussions may be conducted to assure full understanding of the Proposal in order to obtain the most advantageous contract for 1GPA Members.

15. BEST AND FINAL OFFERS: If discussions are conducted pursuant to R7-2-1047, the 1GPA shall issue a written request for Best and Final Offers. If Offerors do not submit a notice of withdrawal or a Best and Final Offer, the immediate previous offer will be construed as the Best and Final Offer.

16. MULTIPLE AWARDS: 1GPA has a large number and variety of potential using districts and agencies at locations throughout the United States and abroad. In order to assure that any ensuing contracts will allow 1GPA to fulfill current and future requirements; 1GPA reserves the right to award contracts to multiple vendors. Such decision will be based upon consideration for Members' experience with existing products and systems, brand continuity for parts replacement and future expansion, contractor's ability to provide for a large diverse Membership, geographic areas served. The actual use of any contract will be at the sole discretion of 1GPA members. Contracts will be awarded by individual line item, groups of line items, incrementally, by region, or by location. The awards will be limited to the least number of Offerors that 1GPA determines is necessary to meet the needs of the Members. Offeror should consider the fact that 1GPA may award multiple contracts in preparing their response. The fact that 1GPA may make multiple contracts, award only one contract, or to make no awards rests solely with 1GPA.

17. ADMINISTRATION FEE: 1GPA's .01 (1%) administration fee shall be included in offeror's net price. Contractor shall not add the administration fee to approved contract prices. 1GPA will invoice the Vendor on a monthly basis for the

administrative participation fee. The invoice will be based on total sales made through the 1GPA contract with the Vendor. Invoices will be issued at the time a Purchase Order is received by 1GPA. Invoices are due and payable upon receipt.

18. PRICE ADJUSTMENT FOR FIXED PRICING: 1GPA may review a fully documented request for a price increase only after the contract has been in effect for one (1) year. A price increase adjustment shall only be considered at the time of a contract extension and shall be a factor in the extension review process. 1GPA shall determine whether the requested price increase or an alternate option is in the best interest of the Members. Price increases, if any, shall not exceed the Federal CPI.

For Arizona, A.R.S. § 23-363(A)(4) directs that the minimum wage shall be increased to $12.00 on and after January 1, 2020. A.R.S. § 23-363(B) directs that the minimum wage shall be increased on January 1, 2021 and on January 1 of successive years by the increase in the cost of living and that the increase in the cost of living shall be measured by the percentage increase as of August of the immediately preceding year over the level as of August of the previous year of the consumer price index (all urban consumers, U.S. city average for all items) or its successor index as published by the U.S. Department of Labor or its successor agency, with the amount of the minimum wage increase rounded to the nearest multiple of five cents.

For all other States, 1GPA will consider adjustments no greater than the Federal CPI or state and local mandated minimum wage increases.

19. PRICE REDUCTION: A price reduction adjustment may be offered at any time during the term of a contract and shall become effective upon notice.

20. QUANTITIES: 1GPA estimates considerable activity resulting from this award. Based on historical data from previous contracts as well as member surveys, 1GPA estimates usage of this contract to $25 Million annually.

1GPA makes no guarantee or commitment of any kind concerning quantities that will actually be purchased. 1GPA makes no guarantee or commitment of any kind regarding usage of any contracts resulting from this Solicitation.

21. PROTECTION OF MEMBERS: The Offeror shall protect all furnishings from damage and shall protect the Member's property from damage or loss arising in connection with this contract. He shall make good any such damage, injury or loss caused by his operations, or those of his employees, to the satisfaction of the Member. The Offeror shall confine his equipment, storage of materials and the operation of his workmen to the limits as indicated by the Unit Foreman in the area in which the work is being performed. Any damage caused to Member's facilities, lawns, etc., shall be repaired immediately or replaced at no expense to the Member.

The successful Offeror shall take all necessary precautions for the safety of students, employees and the public, and shall comply with all applicable provisions of Federal, State and Municipal Safety Laws. He agrees that he is fully responsible to the Member for the acts and omissions of any and all persons whether directly or indirectly employed by him. He shall maintain such insurance as will protect him and the Member from claims or damage for personal injury, including death, which may arise from operations under this contract.

22. SAFETY STANDARDS: All items supplied on this contract must comply with the current applicable occupational safety and health standards of the State of Arizona Industrial Commission, the National Electric Code, and the National Fire Protection Association Standards. The Contractor shall reimburse Member for any penalties received attributed the Contractor's performance of services under this contract.

23. LICENSES: Contractor shall maintain in current status all federal, state and local licenses and permits required by the operation of the business conducted by the contractor.

24. CONTRACTOR LICENSE LAW: Contractor shall comply with State and City Contractors License Law, be duly registered and licensed thereunder where required. Include a photocopy of license if applicable.

25. BILLINGS: All billing notices shall identify the specific item(s) being billed. Items are to be identified by name, model/serial number as most applicable. Any purchase/delivery order issued will refer to the contract number resulting from this solicitation.

26. INSURANCE: Contractor and subcontractors shall procure and maintain until all of their obligations have been discharged, including any warranty periods are satisfied, insurance against claims for injury to persons or damage to property which may arise from or in connection with the performance of the work by the Contractor, his agents, representatives, employees or subcontractors.

The insurance requirements herein are minimum requirements and in no way limit the indemnity covenants contained in this RFP. Contractor shall provide coverage with limits of liability not less than those stated below.

1. Commercial General Liability-Occurrence Form
   Policy shall include bodily injury, property damage and broad form contractual liability coverage.
   General Aggregate - $2,000,000
   Products-Completed Operations Aggregate - $1,000,000
   Personal and Advertising Injury - $1,000,000
   Each Occurrence - $1,000,000
   The policy shall be endorsed to include the following additional insurance language: 1GPA member is named as an additional insured with respect to liability arising out of the activities performed by, or on behalf of the Contractor.

2. Automobile Liability Bodily Injury and Property Damage for any owned, hired, and non-owned vehicles used in the performance of this Contract. Combined Single Limit (CSL) $1,000,000.
   The policy shall be endorsed to include the following additional insured language: 1GPA member is named as an additional insured with respect to liability arising out of the activities performed by, or on behalf of the Contractor, including automobiles owned, leased, hired or borrowed by the Contractor.

3. Worker's Compensation and Employers' Liability

Workers' Compensation	Statutory
Employers' Liability	
Each Accident	$100,000
Disease-Each Employee	$100,000
Disease-Policy Limit	$500,000

4. Property Insurance
   Contractor's awarded contracts for construction or expansion of buildings shall obtain and maintain for the duration of the project, course of construction builders risk insurance in the amount of the real property being constructed.

ADDITIONAL INSURANCE REQUIREMENTS: The policies are to contain, or be endorsed to contain the following provisions:

The Contractor's insurance coverage shall be primary insurance and noncontributory with respect to all other available sources.

Coverage provided by the Contractor shall not be limited to the liability assumed under the indemnification provisions of this Contract.

The Contractor shall provide proof of and maintain Physical Abuse, Sexual Misconduct and Sexual Molestation Liability Coverage of $1,000,000 per injury.

Technology or Cyber Liability insurance with a minimum of $1,000,000 per claim and $2,000,000 aggregate if requested by the Member. Insurance shall include coverage for cloud computing and mobile devices, protection of private or confidential information, network security and privacy, liability for system attacks, digital asset loss, denial or loss of services, unauthorized access and use, as well as introduction, implantation or spread of malicious software code.

Insurance may be arranged in any configuration the Contractor chooses so long as the coverages are not less than the values stated above. Before any orders are processed under an awarded contract, awarded vendor shall provide a certificate that names 1GPA as the certificate holder. In addition, awarded vendor shall be willing to provide, upon request, a certificate of insurance to any Member using this contract.

27. KEY PERSONNEL: It is essential that the contractor provide adequate experienced personnel, capable of and devoted to the successful accomplishment of work to be performed under this contract. The contractor must agree to assign specific individuals to the key positions.

A. The contractor agrees that, once assigned to work under this contract, key personnel shall not be removed or replaced without written notice to 1GPA or Member.

B. If key personnel are not available for work under this contract for a continuous period exceeding 30 calendar days or are expected to devote substantially less effort to the work than initially anticipated, the contractor shall immediately notify 1GPA or Member and shall, subject to the concurrence of the Member, replace such personnel with personnel of substantially equal ability and qualifications.

28. OFFEROR'S EMPLOYEES: Offeror agrees that the individuals provided to 1GPA or Member on a temporary basis are Offeror's, not 1GPA's or Member's employees.

Offeror agrees that it is solely responsible for its own acts and omissions and for those of its employees and that Offeror and any employees working for Offeror are the sole responsibility of Offeror for the purposes of any and all legal requirements, including, but not limited to, obligations and liabilities in the following areas:

Workers' Compensation Insurance
Federal and State Unemployment Taxes
Federal and State Withholding and Reporting Requirements
Unemployment Compensation Insurance
Federal, State, and Local Employment Laws

Offeror agrees that it or its employees are not entitled to any benefits or protections that accrue from an employment relationship with 1GPA, including, but not limited to, health insurance, life insurance, due process rights, and/or vacation/holiday pay.

1GPA will not provide Offeror or its employees any business registrations or licenses that may be required. 1GPA will not combine business operations with Offeror.

Neither Offeror nor its employees are to be considered agents or employees of 1GPA for any purpose. It is understood and agreed that 1GPA does not require Offeror to provide services exclusively to 1GPA and that Offeror and its employees are free to contract to provide services to other companies while it is under contract.

SPECIAL TERMS AND CONDITIONS

In compliance with all applicable laws, the Offeror shall, at no charge to 1GPA, conduct drug/alcohol testing, fingerprint checks, reference checks and background checks of each individual who will perform services for 1GPA to ascertain that there is no history of behavior that would make the individual unsuitable to work with children or work in a school setting. These checks must be completed before the individual provides any services to the Member. The fingerprint and background checks will be conducted in accordance with applicable laws, including current Arizona Revised Statutes § 15-512 and/or 15-534, prior to the start of services as applicable.

At any time, and for any reason, 1GPA or the Member may request or reject any of Offeror's employees.

Offeror agrees to comply with the Member's rules, regulations, and policies, as the Member may modify from time to time.

NOTE: All employees shall have a fingerprint clearance card or documentation that there is a fingerprint clearance card application on file prior to working on Member's property unless otherwise directed by the Member.

CONTRACT GOALS

1Government Procurement Alliance (1GPA), is a non-profit national governmental purchasing cooperative which allows public agencies to take advantage of contracts to purchase the goods and services they need from local and national vendors. Eligible using members include:

- school districts
- charter schools
- colleges and universities
- towns
- municipalities
- counties
- states
- local governments
- federal government
- Native American communities
- fire districts
- any other political subdivision.

Members within each category listed are located throughout the country and vary in population, geographical footprint, may be rural or urban, and have a wide array of support needs within the scope of this solicitation. Contractors may provide services in one, two or all three categories (custodial, grounds and maintenance services) to be considered for contract award. 1GPA encourages firms of all sizes and capabilities to respond.

The goal of this project is to provide 1GPA Members qualified vendor options within a range of prices for the various services contained herein. The Member will contact the awarded firm(s) and complete a pre-estimate questionnaire (see sample page 27) to tailor the services listed in the Scope of Work to meet their needs and negotiate the final price within the contract price range. Although contractors are asked to provide a low-end rate for price comparison purposes, actual Member pricing may go below depending on services requested. Member pricing shall not exceed the contracted maximum price given for each service.

PVUSD is one of the largest employers in the Phoenix area north valley with approximately 3,800 employees. The current student population is approximately 30,410. PVUSD is comprised of 51 sites, which include five high schools, seven middle schools, 29 elementary schools, two alternative schools, one comprehensive online school, and six administrative support sites. PVUSD covers approximately 98-square miles of the northeast Phoenix and north Scottsdale in an area bounded by Jomax Road, Northern Avenue, Pima Road and 7th Avenue. Upon contract award, PVUSD will contact awarded firm(s) to define the PVUSD scope of work and negotiate final pricing within the contracted price ranges. No PVUSD specific scope of work is given nor final firm price is requested herein.

PRE-ESTIMATE QUESTIONNAIRE (EXAMPLE)

This pre-estimate questionnaire is provided as a sample only. Offerors will develop and submit a pre-estimate questionnaire for actual use for each service (custodial, grounds and/or maintenance) performed under this contract (see page 39, TAB 2 – COST, item 2.5).

All areas include hallways, entryways, interior common areas, etc.	Classroom Buildings	Restrooms	Gyms / Multi-Purpose / Fieldhouse	Offices	Conference & Workrooms	Break Rooms & Lounges
Vacuum carpet traffic areas	D			D	D	D
Vacuum carpet wall to wall	W			W	W	W
Vacuum entrance mats	D					
Sweep entryways	D					
Mop hard surfaces, with disinfectant in RR & IEB	D	D	D			D
Empty trash / replace liners	D		D	D	D	D
Straighten furniture				D	D	D
Empty pencil sharpeners	D					
Clean and disinfect water fountains	D	D	D	D	D	D
Spot clean case glass & counters	D					
Clean baseboards	M	W	M	M	M	M
Clean ghosting on whiteboards	Q					
Clean telephones	D		D	W	D	
Spot clean glass doors / entry glass	D		D			
Clean door kickplates	M	W	M	M	M	M
Remove graffiti	D	D	D			
Report needed repairs	D	D	D		D	
Dust furniture & flat surfaces	W		W	W	D	W
Spot clean wall, partitions & doors	W			W	D	
Spot clean carpets	W			W	W	W
Clean glass case glass & counters	W					
Clean interior windows					W	
Spot clean desks / flat surfaces			D			
Clean desktops	W					
Remove spider webs to 10 feet	W	W	W	W	W	W
High Dusting	Q	M	M	M		
Extract high traffic carpet areas	Q			Q		
Clean trash containers	Q	M	M	M	M	M
Dust blinds	SA		SA	M	W	SA
Extract carpet	SA			SA	SA	SA
Clean windows-inside & out up to 10’	SA		SA	SA	SA	SA
Dust vents to 10 feet					W	
Clean light fixtures to 10 feet	SA	M	SA	SA		SA
Scrub & recoat hard surfaces	SA		SA	SA	SA	SA
Clean bleachers			Q			
Clean mirrors		D				
Clean wash bowls / sinks		D	D			
Clean counters		D	D			
Clean / disinfect toilet bowls		D				
Clean / disinfect urinals		D				
Restock consumables		D				
Spot clean tile & partitions		D				
Dust open flat surfaces		W				
Spot clean walls & doors		D	W			

PRE-ESTIMATE QUESTIONNAIRE (EXAMPLE)

This pre-estimate questionnaire is provided as a sample only. Offerors will develop and submit a pre-estimate questionnaire for actual use for each service (custodial, grounds and/or maintenance) performed under this contract (see page 39, TAB 2 – COST, item 2.5).

All areas include hallways, entryways, interior common areas, etc.	Classroom Buildings	Restrooms	Gyms / Multi-Purpose / Fieldhouse	Offices	Conference & Workrooms	Break Rooms & Lounges
Sweep / dust hard floors		D	D			
Scrub hard floors		W				
Clean partitions & doors		W				
Clean tile surfaces		W				
Clean hard water stains / deposits		M				
Spray buff / burnish hard floors			W			
Spray buff / burnish hard floors common areas	M	M		M	M	M
Clean furniture & seating	W			M	M	W
Clean interior windows				D		
Clean glass / TV screens / exterior of appliances						D

D = Daily
W = Weekly
M = Monthly
Q = Quarterly
SA = Semi-Annually
A = Annually

SCOPE OF WORK

1. PURPOSE

The purpose of this solicitation is to establish contract(s) with qualified firm(s) to provide custodial, grounds management and/or general maintenance services for facilities owned and operated by 1GPA Members. Services include the items described in this Scope of Work but may also include related services that are typically provided in the course of normal industry practices but not specifically mentioned herein.

2. BACKGROUND

1GPA currently holds contracts with two (2) vendors for Custodial Services, 16-08PV. PVUSD also has a contract with one (1) vendor for Grounds Maintenance, Landscape and Weed Control Services, 15-012. The current terms for these contracts expire May 31, 2020 at which time this contract will become effective.

3. GENERAL PROVISIONS FOR ALL SERVICES

3.1 Contractor shall provide all management, supervision, quality assurance and necessary labor required to perform the services described herein. Contractor may be required to provide all products, materials and equipment depending on the Member's need. Contractor shall have a minimum of five years of experience in providing the services described herein.

3.2 Contractor employees shall meet background screening and fingerprint requirements prior to performing services under this contract. Contractor shall provide a report of any staff changes to the Member on a mutually agreed upon basis.

3.3 Training and Safety: Contractor shall provide only personnel whom have been trained to perform the work outlined herein. Contractor shall have an ongoing training and safety program for all employees assigned to work under this contract that includes safe work habits, safe use of chemicals, safe use of equipment involved, proper techniques for safety signage and barrier placement to protect building occupants or equipment, and proper handling of hazardous materials and biological waste (blood borne pathogens). Contractor is responsible for supplying proper PPE and SDS sheets as required by applicable laws and regulations.

3.4 Transportation: Contractor's employees shall not use Member owned vehicles for transportation at any time.

3.5 Supervision and Management: Contractor shall manage and supervise all work performed under this contract including quality assurance, personnel management and employee scheduling. The manager or supervisor on site shall be able to communicate effectively with the Member.

3.6 Schedules: Contractor and Member shall come to a mutually acceptable agreement of work schedules based on the needs of each location.

3.7 Access Card/Keys: Access cards/keys will be furnished by the Member as deemed necessary to perform the contracted services and shall not be duplicated. The Contractor shall bear the responsibility of keeping all access cards/keys safe while in their custody. Any lost or stolen access cards/keys shall be reported immediately to the Member and Contractor shall be charged accordingly. Contractor shall return any access cards/keys issued to the Member at the termination of the contract. Any costs incurred by the Member for re-keying or replacing cylinders, locks or other hardware shall be the sole responsibility of the Contractor and may be deducted from the final payment.

3.8 Communication: Contractor shall provide an adequate form of communication (i.e. phone, radio) for employees to converse with each other and with the Member. In case of emergency, Contractor shall immediately notify the Member and/or the Member's security provider. Member may allow land line access at each site for Contractor/Member business only.

3.9 Identification and Uniforms: All personnel shall wear standard uniforms with the company name and logo clearly visible at all times during performance of work under this contract. Contractor's workforce shall be neat and clean in appearance. Closed toed shoes are required. Contractor's employees shall also wear an identification badge

as directed by the Member if required. The badge shall be worn in plain sight and above the waist at all times. Contractor's employees in violation of these requirements shall leave the Member's property. To ensure only authorized Contractor employees are in the Member's facilities, no exception to this requirement should be made.

3.10 Unauthorized Personnel: Contractor shall not be assisted nor accompanied by any individual that is not a properly vetted and authorized employee of the Contractor while performing duties related to the contract. This includes friends, children and/or other relatives. Contractor shall be assessed a fine of $500 per violation of this stipulation.

3.11 Work Order System: Contractor may also be required to use the Member's work-order system to facilitate the assignment and completion of duties on a regular basis. Contractor's managers and supervisors should have the ability to use a computer for minor tasks.

3.12 Energy Conservation: Contractor shall utilize methods which will maximize energy conservation when performing work within the Member's facility. This shall include turning on and off light fixtures as appropriate in the work area and unplugging tools and equipment. Member will ensure adequate power and HVAC are supplied for Contractor to perform services safely.

3.13 Member Property and Personal Property: Contractor shall not enter areas designated as restricted by the Member unless permission has been granted. Contractor shall safeguard against unauthorized reading and disclosing of materials and documents available in the Member's facilities and against unauthorized use of the Member's personal property such as phones, copy machines, scanners, computers, fax machines, etc. Contractor shall not disturb papers on desks, walls, or tables nor shall any desk drawers or cabinets be opened. Found items shall not leave the premises and should be returned as soon as possible as per Member instructions.

3.14 Damage caused by the Contractor to any Member property shall be replaced or repaired within seven (7) business days at no cost to the Member. The Contractor shall immediately notify the Member of damage caused to any gate, fence, structure, vehicle or other area.

3.15 Security: Contractor shall safeguard Member against loss or theft of all property, materials, equipment and accessories during the performance of this contract. Contractor shall lock and secure all gates, fences, doors and windows and activate the security alarm prior to leaving the facility. All rooms are to be secured as soon as the work has been completed. The Contractor shall reimburse member for any false alarm charges caused by their employees.

3.16 Prohibited Items: Contractor shall not be in the possession of guns, knives, other weapons, tobacco (including electronic cigarettes), alcohol and or controlled substances while working on the Member's premises. Contractor shall not be under the influence of illegal drugs or alcohol while performing work under this contract. Any Contractor employee violating this requirement shall be removed immediately from the Member's facility and shall not return.

3.17 The Member, at their sole discretion, may order the immediate removal of any Contractor employee determined to be incompetent, disorderly, threatening, or who uses abusive language. Contractor employees who refuse to adhere to the terms and conditions of this contract or who are otherwise unsatisfactory to the Member shall also be removed at the Member's request.

3.18 Contractor shall provide enough backup staff to cover absenteeism or extend the hours of the existing workforce to compensate for absent staff. Members reserve the right to request additional backup staff as deemed appropriate.

3.19 Subcontracting: No portion of the work described herein may be subcontracted or assigned without prior approval of the Member. Request to subcontract all or any portion of services required by this contract shall be submitted to the Member's representative or designee in writing no less than 30 days in advance of the proposed effective date of the subcontract. Contractor assumes all responsibility for the subcontractor's performance and

compliance with the contract including background checks and fingerprint requirements. Contractor shall include a detailed description of how they will assure the quality and oversight of the subcontractor.

3.20 Additions/Deletions of Facilities: Members may elect to add or delete locations from the contract at any time. Upon notification of the intent to revise the agreement, the Contractor shall submit a new price quote accordingly at which time the Member may or may not elect to move forward with the proposed changes. Member reserves the right to decrease the number of service hours or days due to budget constraints.

3.21 Special Circumstances: Members may make special requests due to the needs of the building occupants such as chemical free services to prevent certain allergic reactions or alternate schedules to reduce noise for sensory sensitive individuals. Such circumstances shall be identified as soon as possible and a mutually beneficial solutions shall be implemented.

4. CLEANING PRODUCTS, CHEMICALS, PARTS, SUPPLIES, TOOLS AND EQUIPMENT

4.1 Contractor may, at the Member's request, be required to supply all necessary cleaning products, chemicals, parts and supplies and to furnish and maintain all equipment and tools in good commercial quality and top working order. Member reserves the right to approve all products and chemicals used in their facilities and to inspect equipment to be used to perform services under this contract. Any equipment determined to be in poor condition shall be replaced at the Contractor's expense. Any changes to the approved products, chemicals, parts, supplies, tools or equipment shall be approved by the Member in advance of use.

4.2 The Member may, at its discretion, provide all cleaning products, chemicals, parts, supplies, tools and equipment or any portion thereof. When using the Member's equipment and tools, Contractor shall treat the Member's property with the upmost care. Contractor shall adhere to the terms and conditions of any warranty, extended warranty or service agreement for equipment used. Any equipment repairs or replacements caused by the Contractor's negligence or misuse shall be at the Contractor's expense.

4.3 If requested by the Member, Contractor shall produce and use Environmentally Preferable Products, Greenguard Certified Products or Green Seal Certified Products whenever they perform satisfactorily and can be acquired at similar total value (cost/quality). Environmentally Preferred Products are defined as any products that have a lesser or reduced negative effect on human health and the environment when compared to competing products that serve the same purpose. This comparison may consider raw material acquisition, production, manufacturing, packaging, distribution, reuse, operation, maintenance and disposal of product. Recyclable, recycled and reusable products are included under this section. The Greenguard Certification Program includes products and processes certified for their low chemical emissions and low toxicity. Green Seal Certified products and practices are certified for their low toxicity and overall environmental impact.

4.4 Contractor shall maintain Safety Data Sheets (SDS) and comply with necessary standards for any chemicals and materials used under this contract. This shall include labeling the contents of all secondary type plastic bottles or containers.

4.5 Storage space shall be kept neat and orderly. Hallways and walkways shall not be used for storing equipment, supplies or debris.

4.6 Contractor shall not remove any Member owned furniture or equipment from the job sites except when specifically authorized by the Member. When Contractor is performing services in areas where furniture and/or equipment is located, the Contractor shall coordinate its relocation with the Member's representative.

5. INSPECTIONS AND NON-PERFORMANCE

5.1 Contractor shall maintain a log at each site/building for the occupants to communicate unsatisfactory, omitted and/or deficient work. Special requests shall be approved by the authorized Member representative in advance of services. Alternatively, Member may allow Contractor to use the work order management system for this purpose.

5.2 Contractor and Member shall conduct ongoing inspections of all work performed using a mutually agreed upon schedule and matrix. The Member shall be the sole judge of acceptability of the work. Any deficiencies shall be corrected and re-inspected by the next business day. Any requests for an extension shall be submitted to the Member in writing for consideration.

5.3 Contractor and Member shall conduct an annual account and performance review at the conclusion of each fiscal year. The review should include an overall analysis of the program's effectiveness and penalties for non-performance. Performance goals, penalties and scope of work changes for the upcoming year should be determined in writing and distributed to both parties.

5.4 If Member determines a critical deficiency occurs (a serious situation that may result in regulatory action being considered or that creates a risk to human safety) the Member shall first give the Contractor an opportunity to remedy the issue if time permits. If the issue is not resolved to the Member's satisfaction or if the deficiency demands immediate remedy, the Member may, at its sole discretion, exercise their right to offset as described in Uniform Terms and Conditions 8(C) (page 16).

5.5 Repeated incidents of unsatisfactory overall performance, shortage of hours or personnel or failure to comply with any other terms, conditions or specifications of the contract may result in termination for default.

6. CUSTODIAL SERVICES

6.1 The Member may request that the Contractor distribute Member supplied consumables such as hand soap, toilet paper, paper towels and trash can liners to various facilities. Contractor shall abide by established inventory controls as required by the Member. Member provided consumable supplies shall not be used by the Contractor for cleaning services unless otherwise agreed upon in writing.

6.2 Cleaning Process: All cleaning processes shall meet high standards of safety and effectiveness for commercial applications in a high traffic area and shall not damage the facilities being cleaned. At no time shall the Contractor allow custodial supply closets to be open and unattended. Contractor shall disconnect all chemical dispenser supply lines when not in use unless backflow preventers are contained within the system.

6.3 The work performed under this contract may include, but is not limited to, the items listed below. Actual work performed and task frequencies will be determined during final negotiations between the Member and Contractor based on the Member's need.

6.3.1 Clean

- Baseboards
- Ghosting on whiteboards
- Door kickplates
- Gym bleachers
- Furniture and seating
- Glass and mirrors
- TV Screens
- Exterior of appliances
- Hard water stains / deposits
- Light fixtures up to 10'
- Partitions and doors
- Tile surfaces
- Trash containers
- Windows inside and out up to 10'

6.3.2 Clean and disinfect

- Toilet bowls
- Urinals
- Restroom fixtures and partitions

- Locker rooms
- Desktops
- Telephones
- Washbowls and sinks
- Water fountains
- Door handles and light switches

6.3.3 Deep clean

- Tile and grout
- Cafeteria tables
- Strip and wax VCT flooring
- Walls, window ledges, doors and door frames (top to bottom)
- Upholstered furniture
- Carpets using truck-mounted extraction

6.3.4 Miscellaneous

- Dust blinds, furniture, flat surfaces, high surface areas and vents up to 10'
- Remove spider webs up to 10'
- Empty pencil sharpeners, trash and recycling cans and replace liners
- Take all trash, cardboard and recyclables to the appropriate site collection bin
- Extract and spot clean carpets
- Spray buff / burnish hard floors
- Mop hard surfaces
- Remove graffiti
- Report needed repairs
- Straighten furniture
- Restock consumables
- Sweep/dust hard floors
- Vacuum

6.4 Green Cleaning Program: Member may desire to continue adopt a "green" cleaning initiative. The program may include but is not limited to:

- Certified sustainable chemicals, products, tools and equipment
- Indoor air quality monitoring
- Recycle program
- Duct cleaning
- Filter changes
- Related document tracking and auditing
- Greenguard and/or Green Seal compliant products and processes

6.5 Special Projects: Member may have the need to have various project-based services performed that may include but are not limited to:

- Floor restoration
- Post construction clean-up
- Disaster/emergency clean-up
- Event set up and clean-up
- Outdoor pressure washing
- Exterior Window Washing

6.6 Day Porter Services: Contractor shall provide a day porter if requested by Member. This is a hands-on-service which provides special attention cleaning during events. Services provided include at minimum cleaning spills, emptying trash, keeping restrooms clean and stocked with consumables, etc.

7. GROUNDS MANAGEMENT

The work performed under this contract may include, but is not limited to, the items listed below. Actual work performed and task frequencies will be determined during final negotiations between the Member and Contractor based on the Member's need.

7.1 Contractor shall inspect all Member sites to familiarize themselves with any and all local conditions and location of underground utilities. Contractor is responsible for all dust control and shall institute measures to control the nuisance and inconvenience of excessive blowing dust, dirt and refuse. The Contractor shall immediately rectify any complaints by residents or owners of adjacent properties and pay all fines levied for the violation of any local or state regulations and restrictions.

7.2 Contractor shall remove and dispose of all landscape waste generated from services performed under this contract.

7.3 Mowing: Remove all rubbish and debris from premises prior to mowing. Mow and maintain turf at a uniform height during growing season and less often during cool season, alternating mow direction to reduce rutting and compaction. Dispose of any visible grass clippings if applicable.

7.4 Walkways and Sidewalks: Blow or sweep all walkways and sidewalks. Debris shall not be blown into the streets or other paved areas.

7.5 Edging and Trimming: Ground cover beds shall be edged, trimmed and raked to maintain a neat appearance. Trim grass around buildings, structures, driveways, sidewalks, curbs, fences, poles and trees to a uniform height so no growth hangs over these features. Trim all grass growing under and/or in the fencing to the ground. Trim around sprinkler heads as necessary to provide maximum water coverage and sprinkler operation.

7.6 Winter Oversee

7.7 ding: Contractor shall provide winter overseeing services upon Member request.

7.8 New Planting: Plant new shrubs, ornamental plants, flowers and trees in accordance to industry best practices. All newly planted trees shall be staked at the time of planting. Stakes and guide wires shall be adjusted as the tree grows. Any trees that need to be re-staked due to vandalism or storm damaged shall be reported to the Member.

7.9 Pruning: Prune shrubs and ornamental grasses to create a uniformly dense plant by selectively thinning and tip cutting. Pruning shall enhance the natural branching effects of the plant. Prune trees up to 10' with irregular growth, growth that inhibits pedestrian or vehicular traffic, crossed branches, diseased or damaged branches and remove sticks. Contractor shall remove trimmings from the site the same day as work occurs.

7.10 Decomposed Granite: Blow, pick up debris and rake all decomposed granite areas as necessary to enhance the aesthetics of the grounds.

7.11 Fertilization: Shrubs, trees, palms and flowers shall be fertilized as needed for deficiencies using Member approved fertilizers.

7.12 Irrigation System Maintenance: Inspect and check entire irrigation system on an agreed upon schedule by turning on the system and performing a wet check to ensure adequate coverage. Visual inspections for dry spots, malfunctioning or broken heads, leaks and staining shall be conducted at each service. Services may include, but are not limited to, emergency repairs, adjusting and replacing sprinkler heads, repairing waterlines, adjusting valves, adjusting controllers and replacing irrigation clocks.

7.13 Thatching and Aeration: Contractor shall provide thatching and aeration as directed by the Member. Thatching should occur when thatch exceeds ½" and causes lawn to thin. Aeration should be performed in late spring or early summer using a spike, slicing or core/plug aerator.

7.14 Weed and Grass Control: Contractor shall provide both pre-emergent and post-emergent treatments as necessary in all turf and non-turf areas. Contractor shall be licensed and/or certified as required by the applicable state or local authority for chemical application for weed control.

7.14.1 Contractor shall keep the following areas free of weeds at all times (other areas may be added by the Member as applicable):

- Granite areas
- Planters
- Parking islands and lots
- Rock washes
- Sand areas
- Ball diamonds
- Backstops
- Baselines
- Running tracks
- Sidewalks
- Driveways and service drives
- Fence dugout areas
- Under bleachers
- All fence lines both perimeter fencing and inside turf areas
- Valve boxes
- Concrete pads for drainage/electrical equipment
- Tree circles
- Any manmade equipment in turf areas such as goal posts, archery stations, etc.

7.14.2 Contractor shall follow all state and federal laws and Member policies when posting notices of upcoming chemical treatment of any area. Contractor shall submit the following written documentation to each location immediately following any application of chemicals:

- Site name, address, and exact location of application
- Name, signature of applicator, his/her certification, and license number
- Date and time of application
- Exact name of the product applied, the application rate and a certification statement that the product was applied according to the label instructions
- Any unusual circumstances that occurred during application

7.15 Sports Fields: Contractor shall maintain sports fields (baseball, football, soccer, etc.) as per Member request specifications.

7.16 Snow Removal: Contractor should provide snow removal services and apply deicing agent as needed for Members in applicable climates. Removal locations include but are not limited to sidewalks, drives, parking lots and drop off zones.

7.17 Should inclement weather prevent the Contractor from performing a scheduled visit, the work shall be performed as soon as possible at a mutually agreed upon time.

8. FACILITIES MAINTENANCE SERVICES

Contractor shall perform skilled building trades activities including emergency response services, depending on areas of assignment such as HVAC, plumbing, electrical, swimming pool services, carpentry/paint or general maintenance. The work performed under this contract may include, but is not limited to, the items listed below. Actual work performed and

task frequencies will be determined during final negotiations between the Member and Contractor based on the Member's need.

8.1 Heating, Ventilation, Air Conditioning and Refrigeration (HVAC)/(HVAC-R):

8.1.1 Troubleshooting, repair, maintenance and testing of HVAC equipment such as cooling towers, piping systems, ventilation equipment, heating equipment, walk-in/reach-in refrigerators and freezers, etc. This includes inspection of motor winding resistance, verifying proper operation of safety controls, checking refrigeration charge, motor amperage, electrical connections, refrigerant pressures, contactors, bearings, filters, belts and any other maintainable parts and components

8.1.2 Maintaining and monitoring Energy Management Systems (EMS) including making temperature and air flow adjustments

8.1.3 Assisting with utility outages including restarts

8.2 Plumbing:

8.2.1 Troubleshooting, repair, maintenance and testing of various plumbed equipment and systems such as hot water systems, toilets, urinals, sinks, drinking fountains, sumps, drains, sewer injection pumps and irrigation system

8.2.2 Installing and maintaining appliances

8.2.3 Installation of new water lines and drains

8.2.4 Removing pipe blockages

8.2.5 Troubleshooting and repairing electrical equipment supporting plumbing systems

8.2.6 Performing inspections and minor repair of interceptors and grease traps

8.2.7 Performing inspections and minor repair of natural gas lines and equipment

8.3 Electrical: Work may include but is not limited to:

8.3.1 Inspection, installation, maintenance, repair and testing a variety of electrical equipment and controls such as lighting systems, clocks, bleachers, branch circuitry, power distribution and control circuitry

8.3.2 Installation of electrical services for new equipment including computer labs, kitchen equipment, copiers, printers, A/C units and room relocations/repurposing

8.3.3 Troubleshooting, maintaining and servicing fire panels and fire suppression systems

8.3.4 Troubleshooting, maintaining and servicing intercom systems and security systems

8.3.5 Supporting Members with electrical needs for special activities and events

8.4 Swimming Pool: Work may include but is not limited to:

8.4.1 Daily maintenance and basic part replacement

8.4.2 Troubleshooting and repairing pumps, filters, feeders, valves, diving boards, and all other mechanical aspects of a swimming pool

8.4.3 Performing routine testing and maintenance of pool chemicals

8.4.4 Performing preventative maintenance

8.4.5 Shocking, backwashing and draining pool as needed

8.5 Carpentry, Paint and General Maintenance: Work may include but is not limited to:

8.5.1 General preventative maintenance

8.5.2 Installation, repair and maintenance of drywall, wall texturing and ceilings

8.5.3 Installing and repairing countertops

8.5.4 Removing graffiti

8.5.5 Preparing interior and exterior surfaces for painting, staining or varnishing

8.5.6 Painting

8.5.7 Pressure washing exterior surfaces

8.5.8 Constructing or making welding repairs to metalwork such as fences, handrails, gates, latches, locks and playground equipment

8.5.9 Installing and maintaining wood/metal windows, doors and related hardware such as frames, panic devices, cylindrical locks, door closers, re-pinning locks and cutting keys

8.5.10 Installing dry erase boards, projector screens, bulletin boards and bookcases

8.5.11 Assembling furniture

8.5.12 Repairing bleachers, furniture, cabinets and cafeteria tables

8.5.13 Installing and repairing VCT and carpet

8.5.14 Building wood and steel stud walls and floor structures

8.5.15 Water damage restoration

EVALUATION CRITERIA

Representatives of 1GPA will evaluate the proposals and rank them from the one most likely to the one least likely to meet the needs of 1GPA and its Members and satisfy the requirements of the RFP. 1GPA may call for interviews to clarify information received in the proposal. In addition to interviews, or if the proposals are very closely ranked, 1GPA reserves the option to enter into discussion on pricing and/or other portions of the proposal, and may request Best and Final offers if it is determined to be in 1GPA 's own best interest. However, offering firms are cautioned that 1GPA may proceed with an award on the basis of information received in the original proposal and subsequent interviews (if held) without calling for additional discussions or Best and Final offers.

Evaluation of the proposal will be based on the following criteria. Specific weighting shall be used. The following criteria are listed in order of greatest importance:

A. **Cost and Estimating Process – (300 Points Possible)** Overall pricing offered and estimating process will be considered.

B. **Overall Program Offered – (275 Point Possible)** Demonstrated understanding of the scope and work required and the ability of the Contractor to deliver quality services in a timely and professional manner. This includes the method of approach, implementation plan, staffing and employee training, supplies and equipment, quality control, sustainability and reporting system.

C. **Experience/Expertise – (250 Points Possible)** Experience, expertise and qualifications of the firm and key personnel in providing required services. Previous experience with similar or like services as outlined in this RFP, EMR rating, subcontractor management and financial information are also considered.

D. **Additional Value/Add Services Offered – (125 Points Possible)** Other related products or services offered that add value to 1GPA Members utilizing the contract including the ability to serve a national member base.

E. **Responsiveness – (50 Points Possible)** Overall responsiveness of the proposal and providing the required information at time of RFP submittal. The ability of the firm to accept the terms and conditions of this solicitation that will become the governing document of this contract will be considered. All forms and certifications have been completed, signed and submitted in the response.

SUBMITTAL REQUIREMENTS & PROPOSAL FORMAT

SUBMITTAL REQUIREMENTS

Prepare and submit **one (1) original and two (2) copies (total of three (3) paper sets)** of the proposal and one electronic copy on a flash drive to the address listed on the cover of this solicitation. The original should be marked "ORIGINAL" and the copies should be marked "COPY".

In addition to the paper sets, an electronic proposal is optional (but preferred) using the BONFIRE online portal. Submittal instructions for BONFIRE are found on the last page of this document under Exhibit A.

Proposals will be date and time stamped when received, whether delivered in paper format to the opening location or submitted electronically through Bonfire. Both paper and electronic proposals must be identical and contain the same documentation.

Each proposal should be submitted on the forms and in the format specified in the RFP. The material should be in sequence and related to the RFP. 1GPA will not provide any reimbursement for the cost of developing or presenting proposals in response to this RFP. Each proposal should contain a table of contents with a clear and complete identification of the materials submitted by section and page number. Failure to include the requested information may have a negative impact on the evaluation of the offeror's proposal. The proposal should include at least the following information:

TAB 1 – GENERAL INFORMATION

1.1 Provide a signed letter of interest in providing the services described in the solicitation. Specify which services (custodial, grounds and/or maintenance) your firm provides.

1.2 Provide a statement signed by the authorized individual indicating the full and complete understanding of the requirements of the Scope of Work detailed within this RFP and the ability of the firm to comply with all term, requirements and conditions of the resultant contract.

1.3 Provide the name, phone number and email address for any inquiries regarding the proposal.

TAB 2 – COST

2.1 1GPA's 1% administration fee shall be included in the net price. Contractor shall not add the administration fee to approved contract prices.

2.2 Complete the Excel Cost Form as per instructions contained therein. Print a hard copy of the cost form and include it in this section. Submit an electronic copy of the Cost Form in Excel Format on a flash drive. Include rates for the items specifically listed as indicated. Pricing should be based on a full fiscal year contract, not on an as needed if needed basis. You may add rates for additional services in the blanks provided. Also include any related or value-added services offered by your firm in the appropriate section.

2.3 Complete the Excel Cost Form for each state for which you provide services. Indicate the applicable state on the Cost Form in the appropriate field.

2.4 Discounts and Incentives: Provide a list of any other discounts or incentives your firm will offer our Members such as a discount for utilizing more than one service (custodial, grounds, and/or maintenance).

2.5 Describe your firm's estimating process. Include copies of pre-estimate questionnaires for each service offered (see Pre-Estimate Questionnaire Example on page 27) (custodial, grounds and/or maintenance) that will be provided for Member use upon contract award.

2.6 Describe your methodology to address minimum wage prices increases that occur January 1 of each year for public agencies that are on a July 1 – June 30 fiscal year budget cycle.

TAB 3 – OVERALL PROGRAM OFFERED

3.1 Provide a proposed method of satisfying the requirements of the Scope of Work (pages 29-37) as specified herein on a line-by-line basis for the applicable items listed below. Include any deviations. **Vendors are not required to offer all three categories (custodial, grounds and/or maintenance) to be considered for award.**

- 3.1.1 General Provisions for All Services (page 29, lines 3.1 through 3.21)
- 3.1.2 Cleaning Products, Chemicals, Parts, Supplies, Tools and Equipment (page 31, lines 4.1 through 4.6)
- 3.1.3 Inspections and Non-Performance (page 31, lines 5.1 through 5.5)
- 3.1.4 Custodial Services (page 32, lines 6.1 through 6.6)
- 3.1.5 Grounds Management (page 34, lines 7.1 through 7.17)
- 3.1.6 Facilities Maintenance Services (page 35, lines 8.1 through 8.5)

3.2 Does your firm have a minimum monthly requirement for any of the services offered? If yes, please describe.

3.3 Describe your firm's implementation process. Provide a sample roll out timeline with planning considerations. Include employment opportunities for Members' staff being displaced by contracting the services to your firm.

3.4 Describe in detail your firm's quality control program. Include how your firm will ensure that quality services and products are provided and that Member expectations are met. Include how issues will be addressed and any service level guarantees that will be provided to the Members. Outline your firm's process for monitoring compliance and reporting issues to Member.

3.5 Describe in detail your firm's initial and ongoing employee training program for service employees and supervisors.

3.6 Confirm your firm has the necessary management and staff to provide quality services. Provide information regarding your firm's employee recruitment and retention program. Include screening requirements such as background checks and fingerprinting, employee evaluation and disciplinary procedures, motivation and reward systems, etc. Address how your firm will meet an increased demand for services, satisfy requests for unscheduled services, provide adequate coverage for absenteeism, fill open positions and handle emergency situations.

3.7 Provide an equipment list or narrative describing the available equipment in each state as well as your standard procedure for determining the most advantageous equipment, chemicals and supplies to provide our Members. Include your standard inspection, maintenance and replacement policies for equipment.

3.8 Describe your firm's approach to supporting Members' commitment to environmental responsibility. Include details relating to products, processes, disposal, energy management, etc. that would promote these types of initiatives (waste minimization, excess packaging reduction, recycling/reduction/reusing, pollution prevention, etc.).

3.9 Describe reporting capabilities and options available to Members.

TAB 4 – EXPERIENCE, EXPERTISE AND QUALIFICATIONS

Experience, expertise and qualifications of the offeror's organization and key personnel is considered during the evaluation process. Include at minimum:

4.1 Your firm's understanding of the Cooperative Purchasing Program and how you will comply with the contract administration requirements of 1GPA. Describe your process for volume tracking and reporting to 1GPA.

4.2 Provide a history of the firm. Include number of years providing the services described in the RFP (a minimum of five (5) years is required) and a list of any awards and/or recognition received. Describe what sets your firm apart from the competition and makes your firm an industry expert.

4.3 Provide a letter from your firm's insurance company stating the Worker's Compensation Experience Modification Rate (EMR) for the past three (3) years on the insurance company's letterhead and signed by an appropriate individual employed by the insurance company. If the EMR exceeds 1.0, provide an explanation of why and steps taken to lower it.

4.4 Provide copies of any applicable licenses or certifications held by the firm or employees.

4.5 Detailed information regarding the key personnel that will be selected to manage and oversee any resultant contract with 1GPA. Provide resumes and/or biographical statements that include experience, education, certifications, licenses and honors or awards for key personnel which may include, but is not limited to:

- Contract Administrator
- Account Managers
- Employment Recruiters/Human Resources
- On-site Staff Supervisors
- Quality Control Staff
- Trainers

4.6 Include a list of your proposed subcontractors if applicable. Include the business name, type of work, license class, license number and expiration date if applicable. Provide a detailed subcontractor selection and management plan that includes how your firm will assure quality and perform oversite.

4.7 Provide information that documents successful and reliable experience in past performances, especially those performances related to the requirements of this RFP. Provide five references, preferably government entities, for whom your firm has provided similar services. Letters of reference are preferred. Include the name of the organization, address, contact person, phone number, email address, scope of services provided size of the contract (number of square feet, square acres, includes sports fields, number of sites, etc.) and length of business relationship.

4.8 Include complete Financial Disclosure Questionnaire (page 43)

TAB 5 – ADDITIONAL VALUE

5.1 1GPA anticipates national use of this contract by Members. Describe your firm's national presence and capabilities including your plan to market this contract to current Members as well as other qualified entities.

5.2 Complete the Geographical Regions Questionnaire (page 45)

5.3 Identify any other value-added services your firm will offer 1GPA Members

TAB 6 – RESPONSIVENESS

Complete all requested forms in the format requested. Required forms shall be signed by a person authorized to bind your firm to the contract.

6.1 Proposal Contract and Acceptance Form (page 5)

6.2 Non-Collusion Affidavit (page 47)

6.3 EDGAR Certifications (page 48)

6.4 Debarment Certification (page 53)

6.5 Anti-Trust Certification Statement (page 54)

6.6 Minority/Women Business Enterprise (MWBE) and Historically Underutilized Business (HUB) Form (page 55)

6.7 Certificate of Insurance (page 56)

6.8 W-9 Form (page 57)

6.9 Addendum acknowledgement (if applicable). The offeror is responsible for checking the AZ Purchasing and Public Purchase websites for applicable amendments (www.azpurchasing.org and www.publicpurchase.com).

FINANCIAL DISCLOSURE QUESTIONNAIRE – TAB 4

Offeror shall complete each item using attachments if necessary. Attachments shall indicate the item number and heading being referenced as it appears below. Please respond "Not Applicable", "N/A", or "none" as needed instead of leaving items blank. Failure to complete may result in the rejection of proposal as unresponsive:

1.	Within the past five years, has the vendor, any principal, owner, officer, major stockholder, affiliate or any person involved in the bidding, contracting, or leasing process been the subject of any of the following: ***For each Yes answer** to questions listed in the section, provide on additional sheets regarding the finding, including but not limited to parties involved, cause, current status, resolution, etc.*	
	(a) A judgment or conviction for any business related conduct constituting a crime under federal, state or local government law including, but not limited to, fraud, extortion, bribery, racketeering, price-fixing, or bid collusion or any crime related to truthfulness and/or business conduct?	☐ Yes ☐ No
	(b) A criminal investigation or indictment for any business related conduct constituting a crime under federal, state or local government law including, but not limited to, fraud, extortion, bribery, racketeering, price-fixing or bid collusion or any crime related to truthfulness and/or business conduct?	☐ Yes ☐ No
	(c) An unsatisfied judgment, injunction or lien for any business-related conduct obtained by any federal, state or local government agency including, but not limited to judgments based on taxes owed and fines and penalties assessed by any federal, state or local government agency?	☐ Yes ☐ No
	(d) An investigation for a civil or criminal violation for any business-related conduct by any federal, state or local agency?	☐ Yes ☐ No
	(e) A grant of immunity for any business related conduct constituting a crime under federal, state, or local governmental law including, but not limited to, fraud, extortion, bribery, racketeering, price-fixing, bid collusion or any crime related to truthfulness and/or business conduct?	☐ Yes ☐ No
	(f) Any licenses/certifications denied, revoked or suspended or provisionally issued?	☐ Yes ☐ No
	(g) A federal, state or local government contract suspension or termination for cause prior to the completion of the term of a contract?	☐ Yes ☐ No
	(h) A federal, state or local government suspension or debarment from the contracting process?	☐ Yes ☐ No
	(i) An administrative proceeding or civil action seeking specific performance or restitution in connection with any federal, state or local contract or lease?	☐ Yes ☐ No
	(j) A federal state or local determination of willful violation of any public works or labor law or regulation?	☐ Yes ☐ No
	(k) A sanction imposed as a result of judicial or administrative proceedings relative to any business or professional license?	☐ Yes ☐ No
	(l) An Occupational Safety and Health Act citation and notification of Penalty containing a violation classified as serious or willful?	☐ Yes ☐ No
2.	During the past three years, has the vendor failed to file returns or pay any applicable federal, state or local government taxes? ***If yes,** identify the taxing jurisdiction, type of tax, liability year(s) and tax liability amount the company failed to file/pay and the current status of the liability.*	☐ Yes ☐ No

FINANCIAL DISCLOSURE QUESTIONNAIRE – TAB 4

3.	Has the vendor had any bankruptcy proceedings, assignments for the benefit of creditors or other measures taken for the protection against creditors been initiated by or against the vendor or its affiliates within the past seven years (whether or not closed) or is any of the aforementioned proceedings pending by or against the vendor or its affiliates, regardless of the date of filing?	☐ Yes ☐ No
4.	Does the vendor have at least five years of experience working with public sector agencies (schools, cities, municipalities, etc.)?	☐ Yes ☐ No
5.	Does the vendor have the financial resources necessary to fulfill the requirements of the proposed contract?	☐ Yes ☐ No
6.	Is the vendor a division or subsidiary of another firm? ***If yes,** provide the name and address of the parent firm. Include a description of the working relationship between the vendor and the parent firm. Specify what impact if any, the relationship will have on the vendor's ability to meet the requirements for services described in the solicitation.*	☐ Yes ☐ No
7.	Has the vendor ever had a name change? ***If yes,** provide all names formerly known as.*	☐ Yes ☐ No
8.	How long has vendor been doing business in Arizona?	_____years
9.	Provide the vendor's annual sales for the last three years: 2018: _____ 2017: _____ 2016: _____	

The undersigned personally and on behalf of the vendor identified herein, does hereby state and certify that the information given above is true, accurate and complete. It is further acknowledged that 1GPA will rely upon the information contained herein and in any attached pages for purposes of evaluating vendor's responsibility for contract award and 1GPA may, in its discretion, by means which it may choose, verify the truth and accuracy of any statements made herein and may request a copy of audited financial statements for the immediate past two fiscal years.

_____ Name of Business	_____ Signature of Officer
_____ Address	_____ Printed Name of Officer
_____ City, State, Zip	_____ Title

GEOGRAPHICAL LOCATIONS AND REGIONS – TAB 5

Place an "X" in the box(es) next to the geographical locations served by your firm. Indicate whether you provide "Products" or "Services" (mark both boxes if both are applicable). Mark the appropriate "All" boxes if your firm provides products and/or services to all states listed in a Division (no need to mark each state individually).

REGION 1: Northeast		***Custodial***	***Grounds***	***Maintenance***
Division 1: New England	All			
	Connecticut			
	Maine			
	Massachusetts			
	New Hampshire			
	Rhode Island			
	Vermont			
Division 2: Mid Atlantic	All			
	New Jersey			
	New York			
	Pennsylvania			

REGION 2: Midwest		***Custodial***	***Grounds***	***Maintenance***
Division 3: East North Central	All			
	Illinois			
	Indiana			
	Michigan			
	Ohio			
	Wisconsin			
Division 4: West North Central	All			
	Iowa			
	Kansas			
	Minnesota			
	Missouri			
	Nebraska			
	North Dakota			
	South Dakota			

REGION 3: South		***Custodial***	***Grounds***	***Maintenance***
Division 5: South Atlantic	All			
	Delaware			
	Florida			
	Georgia			
	Maryland			
	North Carolina			
	South Carolina			
	Virginia			
	District of Columbia			
	West Virginia			
Division 6: East South Central	All			
	Alabama			
	Kentucky			
	Mississippi			
	Tennessee			
Division 7: West South Central	All			
	Arkansas			
	Louisiana			
	Oklahoma			
	Texas			

REGION 4: West		*Custodial*	*Grounds*	*Maintenance*
Division 8: Mountain	All			
	Arizona			
	Colorado			
	Idaho			
	Montana			
	Nevada			
	New Mexico			
	Utah			
	Wyoming			
Division 9: Pacific	All			
	Alaska			
	California			
	Hawaii			
	Oregon			
	Washington			

NON-COLLUSION AFFIDAVIT

State of _____ County of _____

_____ _____

Name Title

_____

Company Name

As an authorized representative of the persons, corporation, or company who makes the accompanying Proposal, and having first been duly sworn, I hereby depose and state as follows:

The accompanying Proposal is genuine, and such Offer is neither a sham nor collusive, nor is such Offer made in the interest or on behalf of any person or corporation not named herein.

The Offeror has not directly or indirectly induced or solicited any other Offeror to put in a sham or collusive bid, or induced or solicited any other Offeror to refrain from submitting an Offer.

The Offeror has not in any manner sought by collusion or anti-competitive means or practices to secure for itself advantage over any other Bidder.

Signed:_____

Title: _____

Subscribed and sworn to before me

This _____ day of _____, 20_____

_____

Signature of Notary Public in and for the

State of _____

County of _____

My Commission Expires on _____

EDGAR CERTIFICATIONS

The following certifications and provisions are required and apply when a 1GPA Member expends federal funds for any contract resulting from this procurement process. Accordingly, the parties agree that the following terms and conditions apply to the Contract between 1GPA, Member and awarded Vendor ("Vendor") in all situations where Vendor has been paid or will be paid with federal funds:

(A) Contractor Violation or Breach of Contract Terms

Contracts for more than the simplified acquisition threshold currently set at $150,000, which is the inflation adjusted amount determined by the Civilian Agency Acquisition Council and the Defense Acquisition Regulations Council (Councils) as authorized by 41 U.S.C. 1908, must address administrative, contractual, or legal remedies in instances where contractors violate or breach contract terms, and provide for such sanctions and penalties as appropriate.

Pursuant to Federal Rule (A) above, when 1GPA Member expends federal funds, 1GPA reserves all rights and privileges under the applicable laws and regulations with respect to this procurement in the event of breach of contract by either party.

Does Vendor agree? YES _____ Initials of Authorized Representative of Vendor

(B). Termination for Cause or Convenience

Termination for cause and for convenience by the grantee or subgrantee including the manner by which it will be effected and the basis for settlement. (All contracts in excess of $10,000)

Pursuant to Federal Rule (B) above, when 1GPA Member expends federal funds, 1GPA or its Member reserves the right to immediately terminate any agreement in excess of $10,000 resulting from this procurement process in the event of a breach or default of the agreement by Vendor in the event Vendor fails to: (1) meet schedules, deadlines, and/or delivery dates within the time specified in the procurement solicitation, contract, and/or a purchase order; (2) make any payments owed; or (3) otherwise perform in accordance with the contract and/or the procurement solicitation. 1GPA also reserves the right to terminate the contract immediately, with written notice to vendor, for convenience, if 1GPA believes, in its sole discretion that it is in the best interest of 1GPA to do so. Vendor will be compensated for work performed and accepted and goods accepted by 1GPA as of the termination date if the contract is terminated for convenience of 1GPA. Any award under this procurement process is not exclusive and 1GPA reserves the right to purchase goods and services from other vendors when it is in 1GPA's best interest.

Does Vendor agree? YES _____ Initials of Authorized Representative of Vendor

(C). Equal Employment Opportunity

Except as otherwise provided under 41 CFR Part 60, all contracts that meet the definition of "federally assisted construction contract" in 41 CFR Part 60-1.3 must include the equal opportunity clause provided under 41 CFR 60-1.4(b), in accordance with Executive Order 11246, "Equal Employment Opportunity" (30 FR 12319, 12935, 3 CFR Part, 1964-1965 Comp., p. 339), as amended by Executive Order 11375, "Amending Executive Order 11246 Relating to Equal Employment Opportunity," and implementing regulations at 41 CFR part 60, "Office of Federal Contract Compliance Programs, Equal Employment Opportunity, Department of Labor."

Pursuant to Federal Rule (C) above, when 1GPA Member expends federal funds on any federally assisted construction contract, the equal opportunity clause is incorporated by reference herein.

Does Vendor agree to abide by the above? YES _____ Initials of Authorized Representative of Vendor

(D). Davis-Bacon Act

When required by Federal program legislation, contractor agrees that, for all prime construction contracts in excess of $2,000, contractor shall comply with the Davis-Bacon Act (40 U.S.C. 3141-3144, and 3146-3148) as supplemented by Department of Labor regulations (29 CFR Part 5, "Labor Standards Provisions Applicable to Contracts Covering Federally Financed and Assisted Construction"). In accordance with the statute, contractors must be required to pay wages to laborers and mechanics at a rate not less than the prevailing wages specified in a wage determination made by the Secretary of Labor. In addition, contractors must be required to pay wages not less than once a week. Current prevailing wage determination issued by the Department of Labor are available at www.wdol.gov. The decision to award a contract or subcontract must be conditioned upon the acceptance of the wage determination. Contractor further agrees that it shall also comply with the Copeland "Anti-Kickback" Act (40 U.S.C. 3145), as supplemented by Department of Labor regulations (29 CFR Part 3, "Contractors and Subcontractors on Public Building or Public Work Financed in Whole or in Part by Loans or Grants from the United States"). The Act provides that each contractor or subrecipient must be prohibited from inducing, by any means, any person employed in the construction, completion, or repair of public work, to give up any part of the compensation to which he or she is otherwise entitled. The 1GPA Member must report all suspected or reported violations to the Federal awarding agency.

Pursuant to Federal Rule (D) above, when 1GPA Member expends federal funds during the term of an award for all contracts and subgrants for construction or repair, Vendor will be in compliance with all applicable Davis-Bacon Act provisions.

Does Vendor agree? YES _____ Initials of Authorized Representative of Vendor

(E). Contract Work Hours and Safety Standards Act (40 U.S.C. 3701-3708)

Where applicable, all contracts awarded in excess of $100,000 that involve the employment of mechanics or laborers, Contractor agrees to comply with 40 U.S.C. 3702 and 3704, as supplemented by Department of Labor regulations (29 CFR Part 5). Under 40 U.S.C. 3702 of the Act, each contractor is required to compute the wages of every mechanic and laborer on the basis of a standard work week of 40 hours. Work in excess of the standard work week is permissible provided that the worker is compensated at a rate of not less than one and a half times the basic rate of pay for all hours worked in excess of 40 hours in the work week. The requirements of 40 U.S.C. 3704 are applicable to construction work and provide that no laborer or mechanic must be required to work in surroundings or under working conditions which are unsanitary, hazardous or dangerous. These requirements do not apply to the purchases of supplies or materials or articles ordinarily available on the open market, or contracts for transportation or transmission of intelligence.

Pursuant to Federal Rule (E) above, when 1GPA Members expends federal funds, Vendor certifies that Vendor will be in compliance with all applicable provisions of the Contract Work Hours and Safety Standards Act during the term of an award for all contracts by 1GPA resulting from this procurement process.

Does Vendor agree? YES _____ Initials of Authorized Representative of Vendor

(F). Rights to Inventions Made Under a Contract or Agreement

If the Federal award meets the definition of "funding agreement" under 37 CFR §401.2 (a) and the recipient or subrecipient wishes to enter into a contract with a small business firm or nonprofit organization regarding the substitution of parties, assignment or performance of experimental, developmental, or research work under that "funding agreement," the recipient or subrecipient must comply with the requirements of 37 CFR Part 401, "Rights to Inventions Made by Nonprofit Organizations and Small Business Firms Under Government Grants, Contracts and Cooperative Agreements," and any implementing regulations issued by the awarding agency.

Pursuant to Federal Rule (F) above, when federal funds are expended by 1GPA Member, Vendor certifies that during the term of an award for all contracts by 1GPA resulting from this procurement process, Vendor agrees to comply with all applicable requirements as referenced in Federal Rule (6) above.

Does Vendor agree? YES _____ Initials of Authorized Representative of Vendor

(G) Clean Air Act and Federal Water Pollution Act

Clean Air Act (42 U.S.C. 7401-7671q.) and the Federal Water Pollution Control Act (33 U.S.C. 1251-1387), as amended—Contracts and subgrants of amounts in excess of $150,000 must contain a provision that requires the non-Federal award to agree to comply with all applicable standards, orders or regulations issued pursuant to the Clean Air Act (42 U.S.C. 7401-7671q) and the Federal Water Pollution Control Act as amended (33 U.S.C. 1251- 1387). Violations must be reported to the Federal awarding agency and the Regional Office of the Environmental Protection Agency (EPA).

Pursuant to Federal Rule (G) above, when federal funds are expended by 1GPA Member, Vendor certifies that during the term of an award for all contracts by 1GPA resulting from this procurement process, Vendor agrees to comply with all applicable requirements as referenced in Federal Rule (G) above.

Does Vendor agree? YES _____ Initials of Authorized Representative of Vendor

(H) Debarment and Suspension

Debarment and Suspension (Executive Orders 12549 and 12689)—A contract award (see 2 CFR 180.220) must not be made to parties listed on the government wide exclusions in the System for Award Management (SAM), in accordance with the OMB guidelines at 2 CFR 180 that implement Executive Orders 12549 (3 CFR part 1986 Comp., p. 189) and 12689 (3 CFR part 1989 Comp., p. 235), "Debarment and Suspension." SAM Exclusions contains the names of parties debarred, suspended, or otherwise excluded by agencies, as well as parties declared ineligible under statutory or regulatory authority other than Executive Order 12549.

EDGAR CERTIFICATIONS

Pursuant to Federal Rule (H) above, when federal funds are expended by 1GPA Member, Vendor certifies that during the term of an award for all contracts by 1GPA resulting from this procurement process, Vendor certifies that neither it nor its principals is presently debarred, suspended, proposed for debarment, declared ineligible, or voluntarily excluded from participation by any federal department or agency.

Does Vendor agree? YES _____ Initials of Authorized Representative of Vendor

(I) Byrd Anti-Lobbying Amendment

Byrd Anti-Lobbying Amendment (31 U.S.C. 1352)—Contractors that apply or bid for an award exceeding $100,000 must file the required certification. Each tier certifies to the tier above that it will not and has not used Federal appropriated funds to pay any person or organization for influencing or attempting to influence an officer or employee of any agency, a member of Congress, officer or employee of Congress, or an employee of a member of Congress in connection with obtaining any Federal contract, grant or any other award covered by 31 U.S.C. 1352. Each tier must also disclose any lobbying with non-Federal funds that takes place in connection with obtaining any Federal award. Such disclosures are forwarded from tier to tier up to the non-Federal award.

Pursuant to Federal Rule (I) above, when federal funds are expended by 1GPA Member, Vendor certifies that during the term and after the awarded term of an award for all contracts by 1GPA resulting from this procurement process, the vendor certifies that it is in compliance with all applicable provisions of the Byrd Anti-Lobbying Amendment (31 U.S.C. 1352). The undersigned further certifies that:

(1) No Federal appropriated funds have been paid or will be paid for on behalf of the undersigned, to any person for influencing or attempting to influence an officer or employee of any agency, a Member of Congress, an officer or employee of congress, or an employee of a Member of Congress in connection with the awarding of a Federal contract, the making of a Federal grant, the making of a Federal loan, the entering into a cooperative agreement, and the extension, continuation, renewal, amendment, or modification of a Federal contract, grant, loan, or cooperative agreement.

(2) If any funds other than Federal appropriated funds have been paid or will be paid to any person for influencing or attempting to influence an officer or employee of any agency, a Member of Congress, an officer or employee of congress, or an employee of a Member of Congress in connection with this Federal grant or cooperative agreement, the undersigned shall complete and submit Standard Form-LLL, "Disclosure Form to Report Lobbying", in accordance with its instructions.

(3) The undersigned shall require that the language of this certification be included in the award documents for all covered sub-awards exceeding $100,000 in Federal funds at all appropriate tiers and that all subrecipients shall certify and disclose accordingly.

Does Vendor agree? YES _____ Initials of Authorized Representative of Vendor

(J) Procurement of Recovered Materials

When federal funds are expended, Member and its contractors must comply with section 6002 of the Solid Waste Disposal Act, as amended by the Resource Conservation and Recovery Act. The requirements of Section 6002 include: (1) procuring only items designated in guidelines of the Environmental Protection Agency (EPA) at 40 CFR part 247 that contain the highest percentage of recovered materials practicable, consistent with maintaining a satisfactory level of competition, where the purchase price of the item exceeds $10,000 or the value of the quantity acquired during the preceding fiscal year exceeded $10,000; (2) procuring solid waste management services in a manner that maximizes energy and resource recovery; and (3) establishing an affirmative procurement program for procurement of recovered materials identified in the EPA guidelines.

Pursuant to Federal Rule (J) above, when federal funds are expended by the Member, as required by the Resource Conservation and Recovery Act of 1976 (42 U.S.C. § 6962(c)(3)(A)(i)), the vendor certifies, by signing this document, that the percentage of recovered materials content for EPA-designated items to be delivered or used in the performance of the contract will be at least the amount required by the applicable contract specifications or other contractual requirements.

Does Vendor agree? YES _____ Initials of Authorized Representative of Vendor

EDGAR CERTIFICATIONS

RECORD RETENTION REQUIREMENTS FOR CONTRACTS INVOLVING FEDERAL FUNDS

When federal funds are expended by 1GPA Member for any contract resulting from this procurement process, Vendor certifies that it will comply with the record retention requirements detailed in 2 CFR § 200.333. Vendor further certifies that it will retain all records as required by 2 CFR § 200.333 for a period of three years after grantees or subgrantees submit final expenditure reports or quarterly or annual financial reports, as applicable, and all other pending matters are closed.

Does Vendor agree? YES _____ Initials of Authorized Representative of Vendor

CERTIFICATION OF COMPLIANCE WITH THE ENERGY POLICY AND CONSERVATION ACT

When 1GPA Member expends federal funds for any contract resulting from this procurement process, Vendor certifies that it will comply with the mandatory standards and policies relating to energy efficiency which are contained in the state energy conservation plan issued in compliance with the Energy Policy and Conservation Act (42 U.S.C. 6321 et seq.; 49 C.F.R. Part 18).

Does Vendor agree? YES _____ Initials of Authorized Representative of Vendor

CERTIFICATION OF EQUAL EMPLOYMENT STATEMENT

It is the policy of 1GPA not to discriminate on the basis of race, color, national origin, gender, limited English proficiency or handicapping conditions in its programs. Vendor agrees not to discriminate against any employee or applicant for employment to be employed in the performance of this Contract, with respect to hire, tenure, terms, conditions and privileges of employment, or a matter directly or indirectly related to employment, because of age (except where based on a bona fide occupational qualification), sex (except where based on a bona fide occupational qualification) or race, color, religion, national origin, or ancestry. Vendor further agrees that every subcontract entered into for the performance of this Contract shall contain a provision requiring non-discrimination in employment herein specified, binding upon each subcontractor. Breach of this covenant may be regarded as a material breach of the Contract.

Does Vendor agree? YES _____ Initials of Authorized Representative of Vendor

CERTIFICATION OF COMPLIANCE WITH BUY AMERICA PROVISIONS

1GPA has a preference for domestic end products for supplies acquired for use in the United States when spending federal funds (purchases that are made with non-federal funds or grants are excluded from the Buy America Act). Vendor certifies that it is in compliance with all applicable provisions of the Buy America Act.

Does Vendor agree? YES _____ Initials of Authorized Representative of Vendor

CERTIFICATION OF ACCESS TO RECORDS – 2 C.F.R. § 200.336

Vendor agrees that the District's Inspector General or any of their duly authorized representatives shall have access to any books, documents, papers and records of Vendor that are directly pertinent to Vendor's discharge of its obligations under the Contract for the purpose of making audits, examinations, excerpts, and transcriptions. The right also includes timely and reasonable access to Vendor's personnel for the purpose of interview and discussion relating to such documents.

Does Vendor agree? YES _____ Initials of Authorized Representative of Vendor

EDGAR CERTIFICATIONS

CERTIFICATION OF APPLICABILITY TO SUBCONTRACTRS

Vendor agrees that all contracts it awards pursuant to the Contract shall be bound by the foregoing terms and conditions.

Does Vendor agree? YES _____ Initials of Authorized Representative of Vendor

VENDOR AGREES TO COMPLY WITH ALL APPLICABLE FEDERAL, STATE, AND LOCAL LAWS, RULES, REGULATIONS, AND ORDINANCES. IT IS FURTHER ACKNOWLEDGED THAT VENDOR CERTIFIES COMPLIANCE WITH ALL PROVISIONS, LAWS, ACTS, REGULATIONS, ETC. AS SPECIFICALLY NOTED ABOVE.

Vendor's Name: _____

Address, City, State, and Zip Code: _____

Phone Number: _____ Fax Number: _____

Printed Name and Title of Authorized Representative: _____

Email Address: _____

Signature of Authorized Representative: _____

Date: _____

DEBARMENT CERTIFICATION

Neither my company nor an owner or principal of my company has been debarred, suspended or otherwise made ineligible for participation in Federal Assistance programs under Executive Order 12549, "Debarment and Suspension," as described in the Federal Register and Rules and Regulations.

By signature below, I certify that the above is true, complete and accurate and that I am authorized by my company to make this certification.

_____

Company Name

_____

Signature of Authorized Company Official

_____

Printed Name

_____

Date

ANTITRUST CERTIFICATION STATEMENT

Texas Government Code
§2155.005

I affirm under penalty of perjury of the laws of the State of Texas that:

1. I am duly authorized to execute this contract on my own behalf or on behalf of the company, corporation, firm, partnership or individual (Company) listed below.
2. In connection with this bid, neither I nor any representative of the Company has violated any provision of the Texas Free Enterprise and Antitrust Act, Tex. Bus. & Comm. Code Chapter 15.
3. In connection with this bid, neither I nor any representative of the Company has violated any federal antitrust law; and
4. Neither I nor any representative of the company has directly or indirectly communicated any of the contents of this bid to a competitor of the company or any other company, corporation, firm, partnership, or individual engaged in the same line of business as the company listed.

Vendor Name _____
(Please Type or Print)

Address _____

_____

_____

_____

Phone _____ Fax _____

Email _____ Website _____

Name of Person Submitting Bid _____

Signature _____ Date _____

Position with Company _____

MINORITY/WOMEN BUSINESS ENTERPRISE (MWBE) AND HISTORICALLY UNDERUTILIZED BUSINESSES (HUB)

Bidding companies that have been certified as Historically Underutilized Business (HUB) or Minority/Women Business Enterprise (MWBE) entities are encouraged to indicate their HUB and MWBE status when responding to this Bid Invitation.

Vendor certifies that this firm is a MWBE (Required by some participating agencies)	☐ Yes	☐ No
Vendor certifies that this firm is a HUB (Required by some participating agencies)	☐ Yes	☐ No

Please scan a copy of MWBE and/or HUB certification letter and the percentage of your business with MWBE and/or HUB suppliers, if applicable, in your bid response in the Response Attachments section.

I, the authorized representative for the company named below, certify that the information concerning residency certification, and MWBE and HUB certifications have been reviewed by me and the information furnished is true to the best of my knowledge.

Contractor's Name/Company Name: _____

Address, City, State, and Zip Code: _____

Phone Number: _____ Fax Number: _____

Printed Name and Title of Authorized Representative: _____

Email Address: _____

Signature of Authorized Representative: _____ Date: _____

CERTIFICATE OF LIABILITY INSURANCE

DATE (MM/DD/YYYY)_____

PRIOR TO COMMENCING SERVICES UNDER THIS CONTRACT, THE CONTRACTOR MUST FURNISH THE MEMBER, CERTIFICATION FROM INSURER(S) FOR COVERAGES IN THE MINIMUM AMOUNTS AS STATED BELOW. THE COVERAGES SHALL BE MAINTAINED IN FULL FORCE AND EFFECT DURING THE TERM OF THIS CONTRACT, AND SHALL NOT SERVE TO LIMIT ANY OTHER CONTRACTOR OBLIGATIONS.

IMPORTANT: If the certificate holder is an ADDITIONAL INSURED, the policy(ies) must be endorsed. If SUBROGATION IS WAIVED, subject to the terms and conditions of the policy, certain policies may require an endorsement. A statement on this certificate does not confer rights to the certificate holder in lieu of such endorsement(s).

PRODUCER	CONTACT NAME:		
	PHONE:	FAX:	
	E-MAIL ADDRESS:		
	INSURER(S) AFFORDING COVERAGE		NAIC #
	INSURER A:		
INSURED	INSURER B:		
	INSURER C:		
	INSURER D:		
	INSURER E:		
	INSURER F:		

COVERAGES **CERTIFICATE NUMBER:** **REVISION NUMBER:**

THIS IS TO CERTIFY THAT THE POLICIES OF INSURANCE LISTED BELOW HAVE BEEN ISSUED TO THE INSURED NAMED ABOVE FOR THE POLICY PERIOD INDICATED. NOTWITHSTANDING ANY REQUIREMENT, TERM OR CONDITION OF ANY CONTRACT OR OTHER DOCUMENT WITH RESPECT TO WHICH THIS CERTIFICATE MAY BE ISSUED OR MAY PERTAIN, THE INSURANCE AFFORDED BY THE POLICIES DESCRIBED HEREIN IS SUBJECT TO ALL THE TERMS, EXCLUSIONS AND CONDITIONS OF SUCH POLICIES. LIMITS SHOWN MAY HAVE BEEN REDUCED BY PAID CLAIMS.

INSR LTR	TYPE OF INSURANCE	ADDL INSD	SUBR WVD	POLICY NUMBER	POLICY EFF (MM/DD/YYYY)	POLICY EXP (MM/DD/YYYY)	LIMITS	
	COMMERCIAL GENERAL LIABILITY						EACH OCCURRENCE	$
	☐ CLAIMS-MADE ☐ OCCUR						DAMAGE TO RENTED PREMISES (Ea occurrence)	$
							MED EXP (Any one person)	$
							PERSONAL & ADV INJURY	$
	GEN'L AGGREGATE LIMIT APPLIES PER:						GENERAL AGGREGATE	$
	☐ POLICY ☐ PRO-JECT ☐ LOC						PRODUCTS – COMP/OP AGG	$
	☐ OTHER:							$
	AUTOMOBILE LIABILITY						COMBINED SINGLE LIMIT (Ea accident)	$
	☐ ANY AUTO							
	☐ ALL OWNED AUTOS ☐ SCHEDULED AUTOS						BODILY INJURY (Per person)	$
	☐ HIRED AUTOS ☐ NON-OWNED AUTOS						BODILY INJURY (Per accident)	$
							PROPERTY DAMAGE (Per accident)	$
								$
	☐ **UMBRELLA LIAB** ☐ OCCUR						EACH OCCURRENCE	$
	☐ **EXCESS LIAB** ☐ CLAIMS-MADE						AGGREGATE	$
	☐ DED ☐ RETENTION $							$
	WORKERS COMPENSATION AND EMPLOYERS' LIABILITY						☐ PER STATUTE ☐ OTH-ER	
	ANY PROPRIETOR/PARTNER/ EXECUTIVE OFFICER/MEMBER EXCLUDED? Y / N ☐ **(Mandatory in NH)** If yes, describe under DESCRIPTION OF OPERATIONS below	N / A					E.L. EACH ACCIDENT	$
							E.L. DISEASE-EA EMPLOYEE	$
							E.L. DISEASE-POLICY LIMIT	$

DESCRIPTION OF OPERATIONS / LOCATIONS / VEHICLES

THE MEMBER SHALL BE ADDED AS ADDITIONAL INSURED AS REQUIRED BY STATUTE, CONTRACT, PURCHASE ORDER OR OTHERWISE REQUESTED. IT IS AGREED THAT ANY INSURANCE AVAILABLE TO THE NAMED INSURED SHALL BE PRIMARY OF OTHER SOURCES THAT MAY BE AVAILABLE. IT IS FURTHER AGREED THAT NO POLICY SHALL EXPIRE, BE CANCELLED OR MATERIALLY CHANGED TO AFFECT THE COVERAGE AVAILABLE TO THE MEMBER WITHOUT THIRTY (30) DAYS WRITTEN NOTICE TO THE MEMBER. THIS CERTIFICATE IS NOT VALID UNLESS COUNTERSIGNED BY AN AUTHORIZED REPRESENTATIVE OF THE INSURANCE COMPANY.

CERTIFICATE HOLDER	CANCELLATION
1GPA **1910 W Washington Street** **Phoenix, AZ 85009**	**SHOULD ANY OF THE ABOVE DESCRIBED POLICIES BE CANCELLED BEFORE THE EXPIRATION DATE THEREOF, NOTICE WILL BE DELIVERED IN ACCORDANCE WITH POLICY PROVISIONS.** **AUTHORIZED REPRESENTATIVE**

ACORD 25 (2014/01)

Form **W-9**
(Rev. December 2014)
Department of the Treasury
Internal Revenue Service

Request for Taxpayer Identification Number and Certification

Give Form to the requester. Do not send to the IRS.

Print or type
See Specific Instructions on page 2.

1 Name (as shown on your income tax return). Name is required on this line; do not leave this line blank.

2 Business name/disregarded entity name, if different from above

3 Check appropriate box for federal tax classification; check only **one** of the following seven boxes:

☐ Individual/sole proprietor or single-member LLC ☐ C Corporation ☐ S Corporation ☐ Partnership ☐ Trust/estate

☐ Limited liability company. Enter the tax classification (C=C corporation, S=S corporation, P=partnership) ▶ _____

Note. For a single-member LLC that is disregarded, do not check LLC; check the appropriate box in the line above for the tax classification of the single-member owner.

☐ Other (see instructions) ▶

4 Exemptions (codes apply only to certain entities, not individuals; see instructions on page 3):

Exempt payee code (if any) _____

Exemption from FATCA reporting code (if any) _____

(Applies to accounts maintained outside the U.S.)

5 Address (number, street, and apt. or suite no.)

Requester's name and address (optional)

6 City, state, and ZIP code

7 List account number(s) here (optional)

Part I Taxpayer Identification Number (TIN)

Enter your TIN in the appropriate box. The TIN provided must match the name given on line 1 to avoid backup withholding. For individuals, this is generally your social security number (SSN). However, for a resident alien, sole proprietor, or disregarded entity, see the Part I instructions on page 3. For other entities, it is your employer identification number (EIN). If you do not have a number, see *How to get a TIN* on page 3.

Note. If the account is in more than one name, see the instructions for line 1 and the chart on page 4 for guidelines on whose number to enter.

Social security number

___ - ___ - ____

or

Employer identification number

__ - _____

Part II Certification

Under penalties of perjury, I certify that:

1. The number shown on this form is my correct taxpayer identification number (or I am waiting for a number to be issued to me); and
2. I am not subject to backup withholding because: (a) I am exempt from backup withholding, or (b) I have not been notified by the Internal Revenue Service (IRS) that I am subject to backup withholding as a result of a failure to report all interest or dividends, or (c) the IRS has notified me that I am no longer subject to backup withholding; and
3. I am a U.S. citizen or other U.S. person (defined below); and
4. The FATCA code(s) entered on this form (if any) indicating that I am exempt from FATCA reporting is correct.

Certification instructions. You must cross out item 2 above if you have been notified by the IRS that you are currently subject to backup withholding because you have failed to report all interest and dividends on your tax return. For real estate transactions, item 2 does not apply. For mortgage interest paid, acquisition or abandonment of secured property, cancellation of debt, contributions to an individual retirement arrangement (IRA), and generally, payments other than interest and dividends, you are not required to sign the certification, but you must provide your correct TIN. See the instructions on page 3.

Sign Here | **Signature of U.S. person** ▶ | **Date** ▶

General Instructions

Section references are to the Internal Revenue Code unless otherwise noted.

Future developments. Information about developments affecting Form W-9 (such as legislation enacted after we release it) is at *www.irs.gov/fw9*.

Purpose of Form

An individual or entity (Form W-9 requester) who is required to file an information return with the IRS must obtain your correct taxpayer identification number (TIN) which may be your social security number (SSN), individual taxpayer identification number (ITIN), adoption taxpayer identification number (ATIN), or employer identification number (EIN), to report on an information return the amount paid to you, or other amount reportable on an information return. Examples of information returns include, but are not limited to, the following:

- Form 1099-INT (interest earned or paid)
- Form 1099-DIV (dividends, including those from stocks or mutual funds)
- Form 1099-MISC (various types of income, prizes, awards, or gross proceeds)
- Form 1099-B (stock or mutual fund sales and certain other transactions by brokers)
- Form 1099-S (proceeds from real estate transactions)
- Form 1099-K (merchant card and third party network transactions)
- Form 1098 (home mortgage interest), 1098-E (student loan interest), 1098-T (tuition)
- Form 1099-C (canceled debt)
- Form 1099-A (acquisition or abandonment of secured property)

Use Form W-9 only if you are a U.S. person (including a resident alien), to provide your correct TIN.

If you do not return Form W-9 to the requester with a TIN, you might be subject to backup withholding. See *What is backup withholding?* on page 2.

By signing the filled-out form, you:

1. Certify that the TIN you are giving is correct (or you are waiting for a number to be issued),
2. Certify that you are not subject to backup withholding, or
3. Claim exemption from backup withholding if you are a U.S. exempt payee. If applicable, you are also certifying that as a U.S. person, your allocable share of any partnership income from a U.S. trade or business is not subject to the withholding tax on foreign partners' share of effectively connected income, and
4. Certify that FATCA code(s) entered on this form (if any) indicating that you are exempt from the FATCA reporting, is correct. See *What is FATCA reporting?* on page 2 for further information.

EXHIBIT A – BONFIRE SUBMISSION INSTRUCTIONS

1GPA in conjunction with Paradise Valley Unified School District utilizes an online public portal known as BONFIRE to accept electronic copies of proposals. Please be advised that in addition to the requested electronic submission through BONFIRE, an original (paper format) proposal is to be submitted by the proposal due date and time at the address listed on the cover of this document. Both paper and electronic proposals must be identical and contain the same documentation.

Please contact Bonfire at Support@GoBonfire.com for technical questions related to your submission or visit the help forum at https://bonfirehub.zendesk.com/hc.

Please follow these instructions to submit via the BONFIRE public portal.

1. **Prepare your submission materials:**

Requested Information/Document	*File Type/Format*	*Maximum # Files*
PROPOSAL	PDF (.pdf)	1

- Note the type and number of files allowed. The maximum upload file size is 1000 MB.
- **Do not embed** any documents within your uploaded files, as they will not be accessible or evaluated.

2. **Upload your submission at: https://pvschools.bonfirehub.com**

- Your submission must be uploaded, submitted, and finalized prior to the Closing Time of:

FEBRUARY 13, 2020 AT 1:00 P.M. ARIZONA TIME

- We strongly recommend that you give yourself sufficient time and at least **ONE (1) day** before Closing Time to begin the uploading process and to finalize your submission.

Important Notes:

- Each item of Requested Information/Document will only be visible after the Closing Time.
- Uploading large documents may take significant time, depending on the size of the file(s) and your Internet connection speed.
- You will receive an email confirmation receipt with a unique confirmation number once you finalize your submission.
- Minimum system requirements: Internet Explorer 11, Microsoft Edge, Google Chrome, or Mozilla Firefox. JavaScript must be enabled. Browser cookies must be enabled.

EXHIBIT B
TO
COOPERATIVE CONTRACT PURCHASE ADDENDUM
CONTRACT NO. 2025222

[Fee Schedule]

See following page(s).

CUSTODIAL, GROUNDS AND MAINTENANCE SERVICES
RFP 20-01PV
COST FORM

Instructions

1. *Complete this form for each state for which your firm provides services. Indicate your company name and the applicable state in the fields provided.*
2. *Provide per square foot pricing for custodial services as a package*
3. *Provide per acre pricing for landscape services as a package*
4. *Provide hourly rates for the positions listed*
5. *Add any other positions or services available but not specifically listed in the blank lines of the appropriate section*
6. *Provide pricing as indicated for "Other Services"*
7. *List value-added and related services your firm offers*

COMPANY NAME:	**CCS Facilty Services**
STATE:	**Arizona**

Identify holidays observed by your firm for which the Weekends/Holidays Rate will apply: New Years Day, Memorial Day, 4th of July, Labor Day, Thanksgiving Day, Christmas Day

CUSTODIAL SERVICES

Line No	Position	Low Per Square Foot: Labor only - Member supplies all tools, equipment and chemicals (excluding transportation). Low degree of complexity.	Not to Exceed Per Square Foot: Total program management: Contractor supplies all labor, tools, chemicals and equipment. High degree of complexity
1	Custodial Services	$ 0.0794	$ 0.1244
2			
3			

		Low Per Hour: Labor only - Member supplies all tools, equipment and chemicals (excluding transportation). Low degree of complexity.			Not to Exceed Per Hour: Total program management: Contractor supplies all labor, tools, chemicals and equipment. High degree of complexity		
Line No	Position	Straight Time	Overtime	Weekends/ Holidays	Straight Time	Overtime	Weekends/ Holidays
1	Custodial Supervisor	$ 25.00	$ 37.50	$ 37.50	$ 28.50	$ 42.75	$ 45.00
2	Custodian	$ 19.25	$ 28.88	$ 35.00	$ 24.25	$ 36.37	$ 36.37
3	Day Porter	$ 20.00	$ 30.00	$ 35.00	$ 25.95	$ 38.92	$ 38.92
4							
5							
6							
7							

CUSTODIAL, GROUNDS AND MAINTENANCE SERVICES
RFP 20-01PV
COST FORM

GROUNDS SERVICES

		Low Per Acre	Not to Exceed Per Acre
Line No	Position	Labor only - Member supplies all tools, equipment and chemicals (excluding transporation). Low degree of complexity. Includes trimming around drives, buildings, plant beds and fencing. No mowing, sports field maintenance, pest or weed control. Manual weeding of composite granite.	Total program management: Contractor supplies all labor, tools, chemicals and equipment. Includes mowing, sports field maintenance and chemical weed control. High degree of complexity.
1	Grounds Services		
2			
3			

		Low Per Hour	Not to Exceed Per Hour
Line No	Position	Labor only - Member supplies all tools, equipment and chemicals (excluding transporation). Low degree of complexity. Includes trimming around drives, buildings, plant beds and fencing. No mowing, sports field maintenance, pest or weed control. Manual weeding of composite granite.	Total program management: Contractor supplies all labor, tools, chemicals and equipment. Includes mowing, sports field maintenance and chemical weed control. High degree of complexity.
1	Grounds Supervisor		
2	Groundskeeper		
3	Irrigation Technician		
4	Sports Field Groundskeeper - Natural Turf		
5	Sports Field Groundskeeper - Artificial Turf		
6			
7			
8			
9			
10			

CUSTODIAL, GROUNDS AND MAINTENANCE SERVICES
RFP 20-01PV
COST FORM

MAINTENANCE SERVICES

		Low Per Hour			Not to Exceed Per Hour		
		Minimum hourly rate for the described trade			Maximum not to exceed hourly rate for described trade		
Line No	Position	Straight Time	Overtime	Weekends/ Holidays	Straight Time	Overtime	Weekends/ Holidays
1	Facilities Management Supervisor						
2	HVAC Supervisor						
3	HVAC Journeyman						
4	HVAC Apprentice						
5	HVAC-R Supervisor						
6	HVAC-R Journeyman						
7	HVAC-R Apprentice						
8	Plumbing Supervisor						
9	Plumbing Journeyman						
10	Plumbing Apprentice						
11	Electrical Supervisor						
12	Electrician Journeyman						
13	Electrician Apprentice						
14	Swimming Pool Technician						
15	Carpentry, Paint and General Maintenance Supervisor						
16	Carpenter						
17	Painter						
18	Welder						
19	Preventative Maintenance Technician						
15	Carpentry, Paint and General Maintenance Supervisor	$ 46.20	$ 69.30	$ 92.40	$ 53.13	$ 79.70	$ 106.26
16	Carpenter	$ 39.10	$ 58.65	$ 78.20	$ 43.00	$ 64.50	$ 86.00
17	Painter	$ 36.30	$ 54.45	$ 72.60	$ 41.74	$ 62.61	$ 83.48
18	Welder					$ -	$ -
19	Preventative Maintenance Technician					$ -	$ -
20	Chief building engineer	$72.96	$ 109.44	$ 145.92	$77.52	$ 116.28	$ 155.04
21	Asst chief building engineer	$65.79	$ 98.69	$ 131.58	$70.38	$ 105.57	$ 140.76
22	Level I building engineer	$48.36	$ 72.54	$ 96.72	$53.04	$ 79.56	$ 106.08
23	Level II building engineer	$56.98	$ 85.47	$ 113.96	$61.60	$ 92.40	$ 123.20
24	Utility building engineer	$41.34	$ 62.01	$ 82.68	$46.11	$ 69.17	$ 92.22
20							
21							
22							
23							

CUSTODIAL, GROUNDS AND MAINTENANCE SERVICES
RFP 20-01PV
COST FORM

OTHER SERVICES

Line No	Service Description	UOM	Cost	Minimums	Alternate UOM if Applicable	Rate	Minimums
1	Strip and Wax VCT	Sq Ft	$ 0.65	$425.00			
2	Scrub and Recoat VCT	Sq Ft	$ 0.45	$375.00			
3	Carpet Cleaning (Truck Mounted Extraction)	Sq Ft	$ 0.14	$325.00			
4	Upholstery Cleaning (Truck Mounted Extraction)	Sq Ft			Per chair/panel	$8 to $20.00	$250.00
5	Air Duct Cleaning	HR					
6	Power Washing	HR	$ 45.00	$250.00			
7	Exterior Window Cleaning	HR	$ 45.00	$250.00			
8	Grout Cleaning/Sealing	Sq Ft	$ 0.85	$250.00			
9	Screen and Recoat Wood Floors	Sq Ft					
10	Sand, Restrip, Seal and Finish Wood Floors	Sq Ft					
11	Polish Concrete	Sq Ft					
12	Wood Floor Repairs (Excluding Logo)	Sq Ft					
13	Exterior Window Cleaning	HR	$ 0.45	$250.00			
14	Turf/Athletic Field Maintenance - Natural Grass	ACRE					
15	Turf/Athletic Field Maintenance - Synthetic Grass	ACRE					
16	Thatching	ACRE					
17	Aeration	ACRE					
18	Snow Removal - Truck	HR					
19	Snow Removal - Manual	HR					
20	Emergency Storm Clean-Up	HR					
21	Downed Tree Clean-Up	HR					
22							
23							
24							

RELATED OR VALUE ADDED SERVICES

Line No	Service Description	Unit of Measure	Rate	Minimums
1				
2				
3				
4				
5				
6				
7				
8				
9				
10				
11				
12				
13				
14				
15				

CITY OF BUCKEYE
Regular Council Meeting
COUNCIL ACTION REPORT

MEETING DATE: 12/17/24	**AGENDA ITEM:** 4.U. ENG - Resolution No. 81-24 approving Transit Services Amendment Between the City of Buckeye and The Regional Public Transportation Authority dba Valley Metro, Contract # 109-75-2025-04-00
DATE PREPARED: 12/17/24	**DISTRICT NO.:** 1,3,4,5
STAFF LIAISON: John Willett, Acting Director of Engineering, jwillett@buckeyeaz.gov, (623) 349-6282	
DEPARTMENT: Engineering	**AGENDA ITEM TYPE:** Consent Agenda Items / New Business

ACTION/MOTION: (This language identifies the formal motion to be made by the Council)
Council to take action on Resolution No. 81-24 approving the Transit Services Amendment between the City of Buckeye and the Regional Public Transportation Authority dba Valley Metro (Contract #109-75-2025-04-00), for the changes to the fixed route bus service costs; and authorizing the City Manager to execute and deliver said Contract and related documents on behalf of the City of Buckeye.

SUMMARY

PROJECT DESCRIPTION:
The Valley Metro Rural Route 563 will continue its partnership with the City of Buckeye, offering regionally funded fixed services (including express) paid for by Valley Metro at no cost to the City. This bus route operates from the Buckeye Park-and-Ride to 17th Avenue/Jefferson Street on weekdays only. Additionally, the Valley Metro Rural Route 685 aims to maintain its partnership with the City of Buckeye by providing bus route services for four short trips along the existing path of Route 685. These trips will connect the Buckeye Senior Center at Miller Road and Centre Avenue, with the Coyote Branch Library/Sundance Crossings at Yuma Road and Dean Road. This internal Buckeye 685 route will be fully funded by Valley Metro, with a City local match of $54,663.00, divided into 12 monthly installments of $4,555.25. All fares will be established by Valley Metro, and no cash handling will be required by the City.

The attached amendment addresses the following items for the Transit Services Agreement, Contract # 109-75-2024, for fiscal year 2025:
Schedule A: Replaces and supersedes the Schedule A entered into on July 1, 2023. All other terms of the Transit Services Agreement dated July 1, 2020 (Contract # 109-75-2021, as amended July 1, 2021, July 1, 2022, and July 1, 2023), remain unchanged and in full force and effect.
Schedule B: Replaces and supersedes the Schedule B entered into on July 1, 2023.

BENEFITS:
Transit systems offer many benefits to a city, including:

- Economic boosts
- Enhanced livability and sustainability
- Improved air quality
- Improved public health
- Lower carbon footprint
- Reduced traffic congestion

FUTURE ACTION:
Annual reconciliation of City match and fare box audits.

FINANCIAL IMPACT STATEMENT:
Route 563 is at no cost to the City and fully funded by Valley Metro. Route 685 will be partially funded by the City, with a City match of $54,663, divided into monthly installments of $4,555.25. All fares will be established by Valley Metro, and no cash handling will be required by the City.

In addition, the City is responsible for routine vehicle maintenance such as oil changes and tire replacement (if applicable).

CURRENT FISCAL YEAR TOTAL COST:
The total cost for the City will be $54,663 from July 1, 2024, to June 30, 2025.

BUDGETED:
Yes

FISCAL YEAR:
FY 25

FUND/DEPARTMENT:
10003170-520057

Items related to a project or facility location must include an attached vicinity map for Council Review.
ATTACHMENTS:
BUCKEYE TSA FY 2024-25 v1 (smf rev 08_07_2024) - CLEAN.pdf
Resolution No. 81-24 Valley Metro Contract # 109-75-2025-04-00.pdf

TRANSIT SERVICES AMENDMENT

BETWEEN

THE CITY OF BUCKEYE

AND

THE REGIONAL PUBLIC TRANSPORTATION AUTHORITY DBA VALLEY METRO

Contract # 109-75-2025-04-00

THIS AMENDMENT dated this 1st day of July 2024, amends the following items of the Transit Services Agreement Contract #109-75-2024 entered into between the City of Buckeye and the Regional Public Transportation Authority dba Valley Metro, dated July 1, 2020, as amended July 1, 2021, July 1, 2022, and July 1, 2023.

The following Schedules replace and supersede those Schedules of the Agreement entered into July 1, 2023.

The attached Schedule A replaces and supersedes Schedule A entered into July 1, 2023.
The attached Schedule B replaces and supersedes Schedule B entered into July 1, 2023.

All other terms of the Parties Transit Services Agreement dated July 1, 2020 remain unchanged and in full force and effect.

IN WITNESS WHEREOF, the Parties have each executed this Agreement as of the date first set forth above.

REGIONAL PUBLIC TRANSPORTATION AUTHORITY (RPTA)

By: _____

Jessica Mefford-Miller, Chief Executive Officer

APPROVED AS TO FORM:

By: _____

Michael Wawro, Chief Legal Officer

CITY OF BUCKEYE

By: _____

Dan Cotterman, City Manager

By: _____

Lucinda J. Aja, City Clerk

APPROVED AS TO FORM:

By: _____

Scott McCoy, City Attorney

SCHEDULE "A"- REGIONALLY FUNDED FIXED ROUTE BUS SERVICE

Sources of Project Operating Budget

Regionally Funded Fixed Route Bus Service **$21,552.00** (including express)

The above line represents the value of transit service paid for by the RPTA to the benefit of the City of Buckeye. The calculation to derive this figure is daily revenue miles of service x number of service days x cost per revenue mile of service.

FY25 Fixed Route Bus Estimate
RPTA Operated in the City of Buckeye
PTF Funded

Funding	PTF
Hastus	Buck

Level	Route	Annual Miles	Gross Cost	Fares	PM	Oper Assist	Net Cost
W	563	2,075	$27,248	($1,052)	($942)	($12,627)	$12,627
Grand Total		**2,075**	**$46,106**	**($729)**	**($2,273)**	**($21,552)**	**$21,552**

SCHEDULE "B" - CITY FUNDED FIXED ROUTE BUS SERVICE COST ESTIMATE

For the period from July 1, 2024 through June 30, 2025, the City of Buckeye will pay the Regional Public Transportation Authority a total of **$ 54,663.00** for the provision of fixed route bus services. This payment will be broken into monthly installments of **$4,555.25**, which shall be due and payable within thirty (30) calendar days of the receipt of an invoice from RPTA. IGA billings will be processed for the full fiscal year based on the above referenced installments. A final invoice will occur once the final recon has been completed after our year end close. This final invoice and payment may be adjusted based on the extent to which the actual cost of service is higher than the budget amount for service.

FY25 Fixed Route Bus Estimate

RPTA Operated in the City of Buckeye
Buckeye Funded

Gross Costs	Estimated Fares	Net	ADOT 5311	Local Share
$132,249	($2,100)	$130,149	($75,486)	$54,663

SCHEDULE "B" CONTINUED

EXHIBIT A

SCOPE OF SERVICES TO BE PROVIDED BY RPTA

1. RPTA agrees to operate bus service directly or through contractors for the City of Buckeye. The Service Route (Route 685) shall commence at July 1, 2024 and end at June 30, 2025 with stops at the following locations:

   Buckeye Community Center (201 E. Centre Avenue)
   Estrella Mountain Community College
   Yuma Road, East of Watson Road, and Yuma Road, West of Watson Road
   Coyote Branch Library (21699 W. Yuma Road)

Additional stops may be added if agreed to by both parties.

The service also provides "Flex Stop" service where an individual may request being picked up and/or dropped off at a safe location where a regular designated bus stop does not exist that is within three-quarters of a mile of the regular published route. Flex stops must be requested in one business day in advance.

The schedule of bus service shall be as follows:

Departs Buckeye Community Center	6:30 AM	
Arrives Coyote Branch Library		7:12 AM
Departs Coyote Branch Library	7:15 AM	
Arrives Buckeye Community Center		7:43 AM
Departs Buckeye Community Center	8:08 AM	
Arrives Coyote Branch Library		8:44 AM
Departs Coyote Branch Library	8:49 AM	
Arrives Buckeye Community Center		9:28 AM
Departs Buckeye Community Center	9:31 AM	
Arrives Coyote Branch Library		10:07 AM
Departs Coyote Branch Library	10:14 AM	
Arrives Buckeye Community Center		10:53 AM
Departs Buckeye Community Center	2:40 PM	
Arrives Coyote Branch Library		3:30 PM
Departs Coyote Branch Library	3:33 PM	
Arrives Buckeye Community Center		4:00 PM

Adjustments to the schedule may be made if agreed to by both Parties.

2. Vehicle Insurance

A. RPTA will be responsible for the insurance through the contractor for vehicles used in passenger service to support Route 685.

B. The insurance for the vehicle(s) shall list the CITY as an additional insured.

C. Section 8 outlines insurance requirements.

3. Fuel

A. RPTA or its contractor(s) shall be solely responsible for the fueling of any bus used to transport passengers as part of the scheduled Route 685 short trip service.

B. Designated fuel cards and fueler identification numbers will be provided to the CITY by RPTA. Only fuel purchased using designated fuel cards will be subsidized by RPTA.

4. Reporting of Defects

A. RPTA will manage vehicle pre-trip, relief, and post-trip inspections electronically through the provided ZONAR system.

B. Prior to operating any vehicle in service on Route 685, a pre-trip inspection must be conducted and an Electronic Vehicle Inspection Report (EVIR) will be generated in the ZONAR system.

C. If an operator relief is made in route, a relief inspection must be conducted and an Electronic Vehicle Inspection Report (EVIR) will be generated in the ZONAR system.

D. Prior to parking the vehicle at the end of the service day, a post-trip inspection must be conducted and an Electronic Vehicle Inspection Report (EVIR) will be generated in the ZONAR system.

E. All defects reported during the EVIR process will be automatically uploaded into the ZONAR online database and will be accessible by any vehicle maintenance administrator, as requested by the CITY. If requested, email alerts will be configured.

F. If a vehicle is determined to have safety-related defects and is placed “Out of Service” by an operator during inspection, the appropriate assessment and/or repairs must be made prior to the vehicle being released back into service. No vehicle may be operated in service on Route 685 with any outstanding out-of-service defects.

G. RPTA will be responsible for providing the City access to the ZONAR system, as well as any necessary training.

H. For any in-service failures that require immediate attention for continued safe operation of the vehicle, RPTA or its contractor(s) shall contact the CITY's Fleet Maintenance facility at the number provided by the CITY.

I. For any in-service failures that require the vehicle to be towed, RPTA or its contractor(s) will be responsible for the towing of the vehicle from the location of failure to the CITY's Fleet Maintenance facility.

J. For scheduled and unscheduled maintenance activities, RPTA or its contractor(s) will be responsible to ensure the vehicle is present at the CITY's Fleet Maintenance facility.

5. Vehicle and Site Access

A. The CITY will be responsible for the provision of keys to RPTA for both yard and CITY-owned vehicle access by RPTA or its contractor(s). Four sets of keys will be provided. RPTA will sign for keys and will maintain responsibility for keys while in possession of RPTA. Lost keys will be reported to the CITY immediately.

6. Vehicle

A. RPTA shall provide one (1) vehicle for service:

Vehicle #	Year	Make	Model	Miles
1643	2020	Chevrolet	ARBOC Spirit of Freedom	

B. RPTA will maintain ownership of the vehicle, and any maintenance, preventative or unscheduled, will be performed by the CITY.

C. ZONAR electronic vehicle inspection reports for the vehicle will be available to the CITY's maintenance staff.

D. The vehicle shall be maintained in a ready state such that it shall be available to support Route 685 service at all times and may not be used for any purpose other than the operational support of Route 685.

E. When not in use, the vehicle will be stored at the CITY's Fleet Maintenance facility.

F. RPTA will provide two sets of keys to the CITY for the vehicle.

7. Auxiliary Equipment

A. Any vehicle used to provide passenger service on Route 685 service will be outfitted with a Diamond fare box for the purpose of collecting and securing passenger fares.

B. Any vehicle used to provide passenger service on Route 685 service will be outfitted with a ZONAR GPS and electronic inspection system for the purpose of reporting defects found during inspection and to monitor vehicle location.

C. RPTA will purchase three (3) new tires and rims through the CITY. The tires will be mounted and ready for use at any time in an emergency and will be stored at the CITY's Fleet Management yard.

D. Any necessary modifications made to CITY-owned vehicles by RPTA shall be reasonably reversed to ensure the vehicle remains in serviceable condition following the relief of any Route 685 related duties.

SCHEDULE "B" CONTINUED

EXHIBIT B

PROVISION OF A VEHICLE, MAINTENANCE AND RELATED REPAIR SERVICES TO BE PERFORMED BY CITY OF BUCKEYE

1. Lease of Bus

The CITY hereby agrees to lease a bus for bus services under this Agreement for $1.00 per year. The term of the lease for the bus shall be coterminous with the term of this Agreement and upon termination of this Agreement, the lease of the bus shall terminate. Upon expiration of the lease, the bus shall be returned to the CITY and the CITY shall maintain title to the bus.

2. General Fleet Management Services:

Administrative services related to the administration of this Agreement shall be billed at the rate of $78.00 per hour unless a lump sum cost for these services is negotiated and mutually agreed upon in lieu of an hourly charge

3. Fixed General Fleet Maintenance and Repair Rates:

Itemized below are the fixed labor rates (charge out rates) and labor times for each type of Fleet Maintenance activity available for vehicles and equipment. The cost of parts is not included in the fixed rates listed below.

A. LABOR RATES

1. Vehicle PM/Safety Inspection (PMI) Rate: **$**82.92 per Labor Hour: See fixed labor times.

2. Vehicle Repair Rate: $82.92 per Labor Hour - for Repair Services on Vehicles (1 ton or less).

3. Large Vehicle and Equipment PM/Repair Rate: $82.92 per Labor Hour for Preventative Maintenance Services/Repairs on Equipment and Vehicles larger than 1 ton.

4. Labor Rates for Diagnostic Services & Major Repair Estimates: Diagnostic services, including major repair estimates, will be billed at $82.92 per Labor Hour.

B. FIXED LABOR RATES

1. Fixed labor times for all repairs shall be based on a Factory-Correct Automotive Repair Program, such as, All Data and Fleet Baseline Information.

2. "Fixed Labor Times" for Preventative Maintenance/Safety Inspection (PMI)

   a. Schedule "A" PM Service (5,000 miles): 1.0 Labor Hour maximum @ $82.92.00 per hour.

   b. Schedule "B2" PM Service (30,000 miles): 2.0 Labor Hours maximum @ $82.92 per hour.

   c. Schedule "C" PM Service (60,000 miles): 3.0 Labor Hours maximum @ $82.92 per hour.

C. ADDITIONAL CHARGES

1. Parts Markup:

   All parts will be priced at the state contract price or actual purchase price plus 15% markup and sales tax.

2. Environmental Disposal Charge:

   At this time there will be no Environmental Disposal Fee (this is subject to change during the term of this Agreement in which case RPTA will be required to pay the CITY for any disposal fee).

3. On-Call After Hours:

   On-Call after hours (overtime) will be charged out when a technician is called out for an emergency after our normal day/hours of operation which is Monday to Thursday 5AM to 6PM. The rate will be time and one half ($124.38) per hour with a minimum call out time of two (2) hours.

4. Outside Vendor Services:

If, in the discretion of the City, a repair is outside the abilities of the City Public Works Department Fleet Division capabilities, and the repair must be subcontracted with a commercial repair facility, the cost of these repairs will be presented for reimbursement by RPTA at invoice.

5. Repair Authorization Limits:

City of Buckeye Fleet Management will not be required to obtain Repair Authorizations for vehicle repairs under $1,000 (aggregate total) on vehicles under 5 years old and/or 100,000 miles unless those repairs encompass a major assembly replacement.

6. Warranty:

A. To the extent applicable, the CITY will use the vendor provided warranty for all repairs/parts covered under factory warranty.

B. Shop repairs will be warranted from defects in labor for a period of six months from the date of initial repair.

C. Premature failure of parts will be warranted by vendors. Type and length of warranties differ per vendor and part. In the event parts are not warranted by vendors, RPTA shall be responsible for paying for replacement parts.

7. Damage:

CITY shall be responsible for any damage to the bus. Damage is considered to be any property damage to the bus, normal wear and tear to be excepted.

RESOLUTION NO. 81-24

A RESOLUTION OF THE MAYOR AND CITY COUNCIL OF THE CITY OF BUCKEYE, ARIZONA, APPROVING THE TRANSIT SERVICES AMENDMENT, CONTRACT #109-75-2025-04-00, BETWEEN THE CITY OF BUCKEYE AND THE REGIONAL PUBLIC TRANSIT AUTHORITY (RPTA) RELATING TO REGIONALLY FUNDED FIXED ROUTE BUS SERVICE ALONG BUS SERVICE ROUTE 563, AND CITY FUNDED FIX ROUTE SHORT TRIPS ALONG BUS SERVICE ROUTE 685; AND AUTHORIZING THE CITY MANAGER TO EXECUTE AND DELIVER SAID CONTRACT ON BEHALF OF THE CITY OF BUCKEYE.

WHEREAS, the City of Buckeye, Arizona ("City") and the Regional Public Transit Authority ("RPTA") entered into that certain Transit Service Agreement, Contract # 109-75-2021, dated July 1, 2020 (the "Transit Service Agreement"); and

WHEREAS, the City and RPTA have since amended the Transit Service Agreement, through (i) Contract # 109-75-2022, dated July 1, 2021, (ii) Contract # 109-75-2023 dated July 1, 2022, and (iii) Contract # 109-75-2024-03-00 dated July 1, 2023; and

WHEREAS, the City and RPTA now desire to further amend the Transit Service Agreement as set forth in Contract # 109-75-2025-04-00, effective as of July 1, 2024 ("Contract # 109-75-2025-04-00").

BE IT RESOLVED by the Mayor and Council of the City of Buckeye, Arizona, as follows:

Section 1. The foregoing recitals are incorporated as if fully set forth herein.

Section 2. Contract # 109-75-2025-04-00 is hereby approved in the form on file with the City Clerk.

Section 3. The City Manager is authorized to execute and deliver Contract # 109-75-2025-04-00 on behalf of the City of Buckeye.

Section 4. The Mayor, City Manager, City Attorney, and City Clerk are hereby authorized and directed to take all steps necessary to carry out the purpose and intent of this Resolution.

PASSED AND ADOPTED by the Mayor and Council of the City of Buckeye, Arizona, this 17th day of December, 2024.

Eric W. Orsborn, Mayor

ATTEST:

Lucinda J. Aja, City Clerk

APPROVED AS TO FORM:

K. Scott McCoy, City Attorney

CITY OF BUCKEYE
Regular Council Meeting
COUNCIL ACTION REPORT

MEETING DATE: 12/17/24	**AGENDA ITEM:** 4.V. AV - Federal Aviation Administration Contract Tower Program Application and Memorandum of Understanding
DATE PREPARED: 12/17/24	**DISTRICT NO.:** 3
STAFF LIAISON: Scott Gray, Aviation Director, sgray@buckeyeaz.gov, (623) 349-6885	
DEPARTMENT: Buckeye Municipal Airport	**AGENDA ITEM TYPE:** Consent Agenda Items / New Business

ACTION/MOTION: (This language identifies the formal motion to be made by the Council)
Council to take action to approve the Federal Aviation Administration Contract Tower Program Application and Memorandum of Understanding (MOU); and to authorize the City Manager to execute and deliver said application and MOU on behalf of the City of Buckeye.

SUMMARY

PROJECT DESCRIPTION:
Airport takeoffs and landings at Buckeye Municipal Airport have grown from approximately 50,000 to 115,000 in the past three years. As a result, Staff is recommending the City enter the Federal Aviation Administration (FAA) Contract Tower (FCT) Program. The FCT provides an opportunity for the cost of operating an Air Traffic Control Tower (ATCT) to be fully funded by the FAA. ATCT that are staffed by employees of private companies rather than by FAA employees. The FCT Program was established in 1982 to allow the agency to contract out the operation of certain towers.

The FCT Program provides safe, efficient, cost-effective air traffic control (ATC) services at approximately 50% of the controlled airports throughout the United States, Puerto Rico, The Virgin Islands, Guam and Saipan. The minimum requirements for entry into the FCT Program are a sponsor (City of Buckeye) provided the ATCT meets Program requirements for conducting ATC services, and a benefit/cost ratio (B/C) of 1.0 or greater, as computed by the FAA. To begin the application process, the sponsor must complete the FCT Program Application Package and Memorandum of Understanding (MOU).

Upon receipt of the completed application package, along with all necessary documentation, FAA will compute a preliminary B/C. If the B/C is less than 1.0, the City will be notified, accordingly that it will not be eligible for the Program but will have an opportunity to appeal that determination. A determination of B/C of 1.0 or greater will qualify the City as a candidate for the FCT Program. That B/C will be valid for a period of five (5) years.

The MOU outlines expectations for both the FAA and the airport sponsor during the application process and will require a signature by both parties prior to continuing with the process. The MOU will be valid for five years from the date of signing. The City will have five years from the date of receiving the B/C to complete all necessary actions, including providing an ATCT suitable to FAA. If all required actions, including the ATCT, are not completed within a five-year period, the B/C will have to be recalculated. The ultimate design and construction of the air traffic control tower (ATCT) could also be grant-funded through the FAA's Airport Improvement Program.

Prior to the tower being completed, the sponsor will be required to sign a Tower Operations Agreement outlining the responsibilities of both the FAA and the airport sponsor. When all requirements for program

entry have been met and sufficient program funding is available, the FAA will set an ATC services start date.

The minimum requirements for entry into the FCT Program are a sponsor (City of Buckeye), provided the ATCT meets Program requirements for conducting air traffic control services, and a benefit/cost ratio (B/C) of 1.0 or greater, as computed by the FAA. To begin the application process, the sponsor must complete the FCT Program Application Package and submit a Memorandum of Understanding (MOU).

BENEFITS:
The additional of an air traffic control tower (ATC) will enhance overall aviation safety by providing air traffic control services to the aircraft operating to and from Buckeye Municipal Airport.

FUTURE ACTION:
Upon acceptance in the FCT Program, the sponsor (City) will be required to complete an Air Traffic Control Tower (ACTC) siting study, environmental assessment, and construction of the ATCT, all of which will be included in both the City's Capital Improvement Program and the Federal Aviation Administration (FAA)/Arizona Department of Transportation (ADOT) Airport Capital Improvement Program. The City will ultimately be required to sign a Tower Operations Agreement outlining the responsibilities of both the FAA and the City prior to the operations of an ATCT.

FINANCIAL IMPACT STATEMENT:
An Air Traffic Control Tower siting study, environmental assessment, and construction will be included in the Airport operating budget and/or Capital Improvement Program, as well as the Federal Aviation Administration (FAA)/Arizona Department of Transportation (ADOT) Airport Capital Improvement Program for potential federal and state grant funding.

CURRENT FISCAL YEAR TOTAL COST:
It is anticipated that the currently proposed Focused Planning Study (included in the City's FY25 CIP and FAA/ADOT ACIP at $250,000.00) will include the site study and preliminary environmental work for the proposed ATCT.

BUDGETED:
Yes

FISCAL YEAR:
FY25

FUND/DEPARTMENT:
3053 - Airport Fund

Items related to a project or facility location must include an attached vicinity map for Council Review.
ATTACHMENTS:
FCT Application - KBXK.pdf

MEMORANDUM OF UNDERSTANDING BETWEEN

FEDERAL AVIATION ADMINISTRATION (FAA)

AND

CITY OF BUCKEYE (KBXK)

This Memorandum of Understanding (MOU) is made for the purpose of notice by and between the Federal Aviation Administration (FAA) and the City of Buckeye (Sponsor), collectively known as "the Parties." This notice represents the complete understanding of the Parties concerning the expectations for each party during the period between the date that the sponsor submits an application for inclusion in the FAA Contract Tower (FCT) Program and the entry into the Program.

Section 1.

The parties agree that the minimum requirements for entry into the FCT Program are a sponsor provided tower determined by FAA to be suitable for conducting air traffic control services and a benefit/cost ratio (B/C) of 1.0 or greater. A sponsor requesting entry into the FCT Program will receive an application package directly from FAA. This package will include a request for documentation that will be used to complete the B/C. Upon receipt of the completed package, FAA will compute the sponsor's B/C.

If a B/C of 1.0 or greater is received, the sponsor will have five (5) years from the date of receiving the B/C to complete the requirements for entry into the FCT Program. At the end of the five-year period, if the requirements have not been fully met, the MOU will expire and the sponsor will be required to sign a new MOU. An updated B/C will be required with each new MOU. Applicants that do not obtain a 1.0 or greater B/C will not be eligible for entry into the FCT Program.

The Airport Sponsor agrees that notwithstanding any other provisions of this MOU, the FAA's ability to provide contract ATC service is contingent upon the appropriation of adequate funding that enables the FAA to provide contract air traffic control (ATC) services. If adequate annual appropriations are not provided, the FAA may not fulfill its expectations under this MOU.

The parties agree to enter into an ATC Tower Operations Agreement that will set forth the terms under which the FAA will provide ATC services, and will define the conditions under which the FAA will occupy the sponsor provided tower for the purpose of providing ATC services.

Parties are bound by a duty of good faith and best effort in achieving the goals of this MOU.

EFFECTIVE DATE and TERM

The effective date of this MOU is the date on which it has been signed by the appropriate representatives for both The FAA and the Airport Sponsor. This Agreement shall expire five (5) years from the effective date unless terminated by the parties in writing.

AGREED:

Airport Sponsor	Federal Aviation Administration
BY: Dan Cotterman	BY:
TITLE: City Manager	TITLE:
DATE:	DATE:

DATA FOR BENEFIT/COST ANALYSIS

FOR NEW ENTRANTS INTO THE FAA CONTRACT TOWER (FCT) PROGRAM

Return the requested information to your FCT Program Implementation Manager.

The requested data will be submitted to the FAA's Office of Aviation Policy and Plans for computation. In addition to the information that you will provide, the benefit/cost (B/C) computation will include data from the Terminal Area Forecast (TAF) and contract cost data provided by the FAA Contract Tower Program Office. The major drivers of the BC ratio are traffic levels. Please look at your TAF operations counts. If you disagree with the TAF, then please provide information below. The data provided here may be used to update the TAF if the data meets our criteria for valid data.

The TAF includes all the airports in the National Plan of Integrated Airport Systems (NPIAS)[1], including FAA towered airports, FAA Contract Tower airports, non-federal towered airports, and non-towered airports. If your airport is not in TAF, please follow the instructions below to provide operation counts and based aircraft data for B/C calculation.

LOC ID	**KBXK**
Airport name	**Buckeye Municipal Airport**
NPIAS airport service level	**Nonprimary, public-use GA - Local**
Part 139 certificate (yes/no)	**No**

[1] For current NPIAS please refer to https://www.faa.gov/airports/planning_capacity/npias/

ANNUAL TRAFFIC ACTIVITY

Provide the most current air traffic activity in the following format, to the extent possible. Air traffic activity is measured by the number of aircraft operations. (A takeoff is one operation and a landing is a second operation.) Provide at least three years of data, if available. Provide information on the methodology used to establish the traffic counts. If there are questions or concerns about the reliability of the traffic counts, FAA may request that the airport use a traffic counting system for up to one year to confirm annual activity levels.

Note: *FAA Traffic Flow Management System data will be one of the data points used to validate operational numbers for air carrier, air taxi, and GA business jet and turboprop activity which typically operates on IFR flight plans. If the airport is aware of factors or data that support a higher level of activity for these types of operations than reported in the Traffic Flow Management System, attach applicable documentation. This could include data from traffic counting programs or systems installed by the airport, or landing fee or fuel sale records by aircraft. This could also include estimates based on an airport master plan update or on pilot logs. Any data or documentation attached may be subject to verification by the FAA. Information provided that is not verifiable may be excluded from consideration.*

Please provide the number of operations in the following categories: air carrier, air taxi, itinerant general aviation, local general aviation, itinerant military, and local military.

Itinerant operations are airport operations performed by an aircraft, either IFR or VFR that land at an airport arriving from outside the airport area, or depart from an airport and leave the airport area.

Local operations are airport operations performed by an aircraft that remain in the local traffic pattern, execute simulated instrument approaches or low passes at the airport, and operations to or from the same airport within a designated practice area within a 20-mile radius of the airport. In addition to operations, please also include the number of enplanements.

Air carrier (or itinerant air carrier) operations are itinerant airport operations performed by aircraft with seating capacity of more than 60 seats or a maximum payload capacity of more than 18,000 pounds, carrying passengers or cargo for hire or compensation. Air carrier operations Include US and foreign flag carriers.

Air taxi (or itinerant air taxi) operations are itinerant airport operations performed by aircraft with seating capacity of 60 seats or less or a maximum payload capacity of 18,000 pounds or less, carrying passengers or cargo for hire or compensation. Itinerant general aviation operations are itinerant airport operations performed by all civil aircraft, except air carriers or air taxis/commuters. Itinerant military operations are itinerant airport operations performed by military aircraft.

Fiscal Year (FY)	Air Carrier	Air Taxi	Itinerant General Aviation	Local General Aviation	Itinerant Military	Local Military	Total Operations	Enplane-ments
FY 2024*	0	132	47,464	65,867	100	0	113,563	0
FY 2023	0	100	37,177	51,617	100	0	88,994	0
FY 2022	0	100	14,409	20,175	100	0	34,784	0

*Please provide data for the three most recent years. If FY 2018 is not the most recent year, please replace 'FY 2018' with the most recent year and provide data for the two preceding years as well.

- **Operations counts provided via VirTower ADSB tracking system (attached).**
- **The Airport Master Plan study is currently underway and draft documents are available at https://www.buckeyeaz.gov/community/buckeye-municipal-airport/airport-master-plan as supporting documentation.**

BASED AIRCRAFT

Please attach a list of all validated aircraft and helicopters, by type (single engine, multi engine, jet, helicopters, gliders, military, and ultra-light), that are based at your airport a majority of the year as shown on the FAA website basedaircraft.com.

- **Basedaircraft.com Report Attached**

SITE SPECIFIC INFORMATION

Note: *This information will not affect your BC ratio, but it will affect your operation.*

Indicate whether the airport conducts any special type of operation such as annual air shows or any type of support for events that result in an increase in air traffic operations. Include unique features such as weather, geography, hazards, runway visibility zone (RVZ) issues (review and confirm if nonstandard RVZ condition exists at the airport), runway configuration (parallel, converging, intersecting), Hot Spots, Special Use Airspace in the vicinity of the airport, proximity to Class B or Class C airspace, presence of flight schools either on or in the vicinity of the airport, etc.

KBXK Specific Information

- **The Sponsor hosts the Annual Buckeye Air Fair in February, over a three-day period. Attendance has been estimated to be approximately 30,000 over the weekend.**

- **The Sponsor does not believe there are any unique features that impact airport operations.**

- **There is a Special Air Traffic Rule airspace immediately east of the airport, which supports the military activity at Luke AFB.**

- **Two flight training operators utilize the airport, Mesa Pilot Development located on the airport, and United Aviate which is located at Phoenix Goodyear Airport.**

- **KBXK is located just outside of the Class B Mode C airspace.**

COSTS

If there is a current non-federal tower, then please supply current tower costs such as Air Traffic Control (ATC) labor[2], technical operations labor and non-labor costs[3], Logistics, Telecommunications, Utilities, and Leases.

- **Currently, there is no non-federal tower operating at KBXK. Due the amount of air traffic, the Sponsor is exploring options to establish a temporary tower while continuing the Contract Tower Program application process.**

[2] ATC labor costs include the compensation and benefits of personnel directly associated with providing ATC services at each tower.

[3] Technical operations labor costs include the compensation and benefits of personnel that are directly associated with providing maintenance of electronics and equipment used in direct support of providing ATC service and located within the tower. Technical operations Non-Labor costs include costs such as guard services, ground services, and other services that are directly associated with providing ATC service.

CITY OF BUCKEYE
Regular Council Meeting
COUNCIL ACTION REPORT

MEETING DATE: 12/17/24	**AGENDA ITEM:** 4.W. FD - Change Order #1 to Cooperative Purchase Contract Addendum (CCPA) Contract No. 2024144 between the City of Buckeye and Matlick Enterprises Inc DBA United Fire Equipment Company
DATE PREPARED: 12/17/24	**DISTRICT NO.:**
STAFF LIAISON: Jake Rhoades, Fire Chief, jrhoades@buckeyeaz.gov, (623) 349-6700	
DEPARTMENT: Fire	**AGENDA ITEM TYPE:** Consent Agenda Items / New Business

ACTION/MOTION: (This language identifies the formal motion to be made by the Council)
Council to take action approving Change Order No. 1 to the Cooperative Contract Purchase Addendum (CCPA) (No. 2024144) between the City of Buckeye and Matlick Enterprises Inc., DBA United Fire Equipment Company for firefighting equipment; and authorize the City Manager to execute and deliver said Change Order on behalf of the City.

SUMMARY

PROJECT DESCRIPTION:
The Fire Department is requesting approval of Change Order No. 1 to Cooperative Contract Purchase Addendum (CCPA) No. 2024144 with Matlick Enterprises, Inc. With exception of increasing the Not to Exceed amount from $500,000 to $900,000, all original terms and conditions of CCPA No. 2024144 remain the same. This increase will allow for budgeted purchases for FY-25 and equipment for new and replacement apparatus. The Public Works' Fleet Division may also use this contract for equipment on fire apparatus that falls under their budget.

Council is not approving any purchase; only approving the maximum dollar amount that can be spent through the life of the contract. By doing so at this time, the Fire Department will not need to return to Council and the contract will be in place to allow for Purchase Orders to be issued as soon as funds are available to expedite the purchase process and allow apparatus to be placed in-service as soon as possible.

BENEFITS:
Allows for flexibility in procuring equipment and supplies in a timely and cost-effective manner to provide necessary public safety services without disruption.

FINANCIAL IMPACT STATEMENT:

This request aligns with the Department's Council approved budget and allows for the execution of funds as projected. FY-24 purchases on this CCPA totaled approximately $315,000 leaving only $185,000 available for FY-25. The additional $400,000 will allow for purchases not to exceed the $585,000 budgeted amount in FY-25.

CURRENT FISCAL YEAR TOTAL COST:
$585,000

BUDGETED:
Yes

FISCAL YEAR:
FY-25

FUND/DEPARTMENT:
10002140-541210, 10002140-521922, 10002144-520518, 10002144-521520, 10002144-521523, 10002144-522150, 10002144-522151, 10003173-541210

Items related to a project or facility location must include an attached vicinity map for Council Review.
ATTACHMENTS:
Contract No. 2024144.pdf

COOPERATIVE CONTRACT PURCHASE ADDENDUM (CCPA)
BETWEEN
THE CITY OF BUCKEYE
AND
MATLICK ENTERPRISES INC DBA UNITED FIRE EQUIPMENT COMPANY
Contract No. 2024144

CHANGE ORDER #1

THIS CHANGE ORDER #1 (this "Change Order") is entered into as of_____between the City of Buckeye, an Arizona municipal corporation (the "City") and Matlick Enterprises Inc., dba United Fire Equipment Company., an Arizona corporation (the "Contractor"). This Change Order modifies certain sections of Contract No. **2024144** (the "Contract"), with those sections not expressly modified remaining in full effect pursuant to their terms.

CONTRACT CHANGES:

1. Contract Price is amended by increasing the not-to-exceed amount from **$500,000.00**to **$900,000.00**.

2. **New Section,** Clickwrap Terms Excluded. In the event the Contract's terms of sale or service were provided to the City only upon "acceptance" of a "clickwrap" or "clickthrough" agreement, such terms of sale or service shall not be binding upon the City. No oral agreement, "clickwrap" or "clickthrough" agreement or other understanding shall in any way modify a City issued or approved contract or this Contract.

RECITAL OF
CONTRACT TERM (END-DATE)
AND
CONTRACT PRICE:

The Contract term end date is governed by a cooperative purchase contract end-date.

The original Contract Price was not-to-exceed (NTE) $500,000.00
The amended Contract Price at the time of this Change Order was NTE $500,000.00.
The amended Contract Price after this Change Order is and shall be NTE $900,000.00.

For reference purposes, **Attachment "1"** attached hereto includes selected pages/portions of the Contract.

ADDITIONAL PROVISIONS:

Except as amended herein, all provisions of the Contract remain in full force and effect.

In the event of any conflict or discrepancy between the terms of this Change Order, the Contract, and any other contract documents, the documents shall govern in that order.

This Change Order may be canceled pursuant to the provisions of A.R.S. § 38-511.

To the extent applicable under A.R.S. § 35-394, Contractor certifies that it does not, and will not for the duration of the Contract, use the forced labor, any goods or services produced by the forced labor, or any contractors, subcontractors, or suppliers that use the forced labor or any goods or services produced by the forced labor of ethnic Uyghurs in the People's Republic of China.

IN WITNESS WHEREOF, the parties hereto have executed this Change Order as of the date first set forth above.

CITY:

THE CITY OF BUCKEYE,
an Arizona municipal corporation

_____
Dan Cotterman, City Manager

ATTEST:

_____
Lucinda Aja, City Clerk

RECOMMENDED:

William Kauppi
_____
William Kauppi, Chief Financial Officer

APPROVED AS TO FORM:

_____
K. Scott McCoy, City Attorney

CONTRACTOR:

MATLICK ENTERPRISES INC DBA
UNITED FIRE EQUIPMENT COMPANY
an Arizona corporation

By: Paul Fraser

Title: Product Manager

Attachment "1"

Selected Pages/Portions of Contract

CONTRACT AMENDMENT

CONTRACT NO.: AMENDMENT NO.: TITLE: CONTRACTOR:	CTR050476 4 Emergency Response, Firefighting and Safety Equipment and Supplies Matlick Enterprises Inc – United Fire Equipment Co	ADEQ PROCUREMENT 1110 W. Washington Street Phoenix, AZ 85007 602-771-4730

THE PURPOSE OF THIS AMENDMENT IS TO:

1. Contract is hereby extended to 6/30/2025.

2. Contractor shall procure, maintain and provide ADEQ with current certificate of insurance meeting the insurance requirements as stated in the Special Terms and Conditions Section 3-A.

   The Certificate of Insurance should be issued to:

   Arizona Department of Environmental Quality
   Contracts and Procurement
   1110 W. Washington Street
   Phoenix, AZ 85007-2935

   And emailed to weiner.jeremiah@azdeq.gov

3. All other Requirements, Specifications, Terms and Conditions remain unchanged.

ARIZONA DEPARTMENT OF ENVIRONMENTAL QUALITY
ACKNOWLEDGEMENT AND AUTHORIZATION

This contract extension shall be fully executed upon the approval electronically in Arizona Procurement Portal (APP) eProcurement System by an authorized representative of the Contractor and applied to the contract in APP by the Procurement Officer or delegate.

COOPERATIVE CONTRACT PURCHASE ADDENDUM (CCPA)
BETWEEN THE CITY OF BUCKEYE
AND
MATLICK ENTERPRISES, INC. DBA UNITED FIRE EQUIPMENT COMPANY

EMERGENCY RESPONSE, FIREFIGHTING AND SAFETY EQUIPMENT AND SUPPLIES
CONTRACT NO. 2024144

THIS COOPERATIVE CONTRACT PURCHASE ADDENDUM (this "Addendum") is entered into as of February 6, 2024, between the City of Buckeye, an Arizona municipal corporation (the "City") and Matlick Enterprises, Inc. dba United Fire Equipment Company, an Arizona corporation (the "Contractor").

WHEREAS, after a competitive procurement process, which is documented in the Award attached hereto as Exhibit A and incorporated herein by reference, The State of Arizona entered into Contract No. CTR050476, dated July 1, 2020 with the Contractor (such contract and subsequent amendments thereto here referred to as the "State of Arizona Contract") The State of Arizona Contract is attached hereto as Exhibit A and incorporated herein by reference; and

WHEREAS, the City is permitted by Section 24-3-16 of the City Procurement Code to make purchases via cooperative purchasing pursuant to a cooperative purchasing contract; and

WHEREAS, the Contractor has made a proposal to the City, which is attached hereto as Exhibit A and incorporated herein by reference (the "Contract"); and

WHEREAS, the City desires to accept the Proposal and enter into contract with the Contractor under the terms and conditions of the State of Arizona Contract, by issuing this Addendum to said contract.

THEREFORE, the City now enters into this Addendum with Contractor, for the goods and services set forth in State of Arizona Contract, which is attached hereto as Exhibit A and incorporated herein by reference. This Addendum incorporates the terms and conditions of the State of Arizona Contract, save that references therein to State of Arizona shall be read to refer to the City of Buckeye. This Addendum shall be effective as of the date set forth below for approval and remain in effect for the remainder of the State of Arizona Contract CTR050476 unless such term is modified or extended pursuant to the terms of the State of Arizona Contract. The Contractor shall provide all goods and services in accordance with the State of Arizona Contract, which is attached hereto as part of Exhibit A, in a total amount not to exceed $500,000.00.

FURTHER, this Addendum is subject to cancellation pursuant to ARS §38-511.

FURTHER, to the extent applicable, the Contractor and its subcontractors warrant compliance with all federal immigration laws and regulations that relate to their employees and their compliance with the E-verify requirements under A.R.S. § 23-214(A). The Contractor's or its subcontractors' failure to comply with such warranty shall be deemed a material breach of this

Addendum and may result in the termination of this Addendum by the City. The City retains the right to inspect the papers of the Contractor's or its subcontractors' employees who perform any work or services pursuant to this Addendum to ensure compliance with these warranties.

FURTHER, to the extent applicable, the Contractor warrants that it is not participating and will not participate in prohibited activity in contravention of A.R.S. § 35-393.01.

FURTHER, to the extent applicable under ARIZ. REV. STAT. § 35-394, Contractor certifies that it does not currently, and agrees for the duration of this Agreement that it will not use (i) the forced labor of ethnic Uyghurs in the Peoples Republic of China ("ethnic Uyghurs"), (ii) any goods or services produced by the forced labor of ethnic Uyghurs, or (iii) any Contractors, subcontractors, or suppliers that use the forced labor or any goods or services produced by the forced labor of ethnic Uyghurs. If Contractor becomes aware that it is not in compliance with this paragraph, Contractor shall notify the City of the noncompliance within five (5) business days of becoming aware of it. If Contractor fails to provide a written certification that Contractor has remedied the noncompliance within one hundred eighty (180) days after that, this Agreement shall terminate unless the termination date of this Agreement occurs before the end of the remedy period, in which case this Agreement terminates on the Agreement termination date.

FURTHER, the Parties agree that the Addendum and Exhibits thereto shall be governed by State of Arizona law and suits pertaining to the Addendum and Exhibits thereto may only be brought in courts located in Maricopa County, Arizona.

FURTHER, all modifications, including but not limited to service additions and deletions, will be made in writing and with the written agreement of both parties.

FURTHER, in the event of any inconsistency between this Addendum and Exhibit A, the documents shall govern in that order.

THEREFORE, the Parties have executed this Addendum as of the date first set forth above.

CITY

THE CITY OF BUCKEYE,
an Arizona Municipal corporation

Dan Cotterman, City Manager

CONTRACTOR

MATLICK ENTERPRISES INC. DBA
UNITED FIRE EQUIPMENT COMPANY,
an Arizona corporation

By: Paul Fraser

Its: Product Manager

Adobe Acrobat Sign Transaction Number: CBJCHBCAABAAT2CqPsJO3IJi2PlKDRPM4kD5U0j_xmk6

ATTEST:

Lucinda Aja, City Clerk

RECOMMENDED:

William Kauppi, Chief Financial Officer

APPROVED AS TO FORM:

K. Scott McCoy, City Attorney

CITY OF BUCKEYE
Regular Council Meeting
COUNCIL ACTION REPORT

MEETING DATE: 12/17/24	**AGENDA ITEM:** 4.X. FD - Change Order No. 2 to Cooperative Purchase Contract Addendum (CCPA) Contract No. 2024145 between the City of Buckeye and Motorola Solutions, Inc.
DATE PREPARED: 12/17/24	**DISTRICT NO.:**
STAFF LIAISON: Jake Rhoades, Fire Chief, jrhoades@buckeyeaz.gov, (623) 349-6700	
DEPARTMENT: Fire	**AGENDA ITEM TYPE:** Consent Agenda Items / New Business

ACTION/MOTION: (This language identifies the formal motion to be made by the Council)
Council to take action on Change Order No. 2 to the Cooperative Contract Purchase Addendum (CCPA) (No. 2024145) between the City of Buckeye and Motorola Solutions, Inc. for public communications equipment and services; and authorize the City Manager to execute and deliver said Change Order on behalf of the City.

SUMMARY

PROJECT DESCRIPTION:
The Fire Department is requesting approval of Change Order No. 2 to Cooperative Contract Purchase Addendum (CCPA) No. 2024145 with Motorola Solutions, Inc. With exception of increasing the Not to Exceed amount from $540,000 to $840,000, all original terms and conditions of CCPA No. 2024145 remain the same. This increase will allow for budgeted purchases for FY-25 and equipment for new and replacement apparatus. The Public Works' Fleet Division may also use this contract for equipment on fire apparatus that falls under their budget.

Council is not approving any purchase; only approving the maximum dollar amount that can be spent through the life of the contract. By doing so at this time, the Fire Department will not need to return to Council and the contract will be in place to allow for Purchase Orders to be issued as soon as funds are available to expedite the purchase process and allow apparatus to be placed in-service as soon as possible.

BENEFITS:

Allows for flexibility in procuring equipment and supplies in a timely and cost-effective manner to provide necessary public safety services without disruption.

FINANCIAL IMPACT STATEMENT:

This request aligns with the Department's Council approved budget and allows for the execution of funds as projected.

CURRENT FISCAL YEAR TOTAL COST:
$300,000

BUDGETED:
Yes

FISCAL YEAR:
FY-25

FUND/DEPARTMENT:
10002140-541210, 10002140-549999, 10003173-541210; 10002144-521520

Items related to a project or facility location must include an attached vicinity map for Council Review.
ATTACHMENTS:
CCPA Contract No. 2024145.pdf

COOPERATIVE CONTRACT PURCHASE ADDENDUM (CCPA)
BETWEEN
THE CITY OF BUCKEYE
AND
MOTOROLA SOLUTIONS, INC.
Contract No. 2024145

CHANGE ORDER # 2

THIS CHANGE ORDER # 2 (this "Change Order") is entered into as of _____, 2024 between the City of Buckeye, an Arizona municipal corporation (the "City") and Motorola Solutions, Inc., a Delaware corporation (the "Contractor"). This Change Order modifies certain sections of Contract No. 2024145 (the "Contract"), with those sections not expressly modified remaining in full effect pursuant to their terms.

CONTRACT CHANGES:

1. Contract Price, is amended by increasing the not-to-exceed amount by $300,000.00 from $540,000.00 to $840,000.00.

RECITAL OF
CONTRACT TERM (END-DATE)
AND
CONTRACT PRICE:

The Contract term end date is governed by a cooperative purchase contract end-date.

The original Contract Price was not-to-exceed (NTE) $500,000.00.

The amended Contract Price at the time of this Change Order was NTE $540,000.00.

The amended Contract Price after this Change Order is and shall be NTE $840,000.00.

For reference purposes, **Attachment "1"** attached hereto includes selected pages/portions of the Contract.

ADDITIONAL PROVISIONS:

Except as amended herein, all provisions of the Contract remain in full force and effect.

In the event of any conflict or discrepancy between the terms of this Change Order, the Contract, and any other contract documents, the documents shall govern in that order.

This Change Order may be canceled pursuant to the provisions of A.R.S. § 38-511.

To the extent applicable under A.R.S. § 35-394, Contractor certifies that it does not, and will not for the duration of the Contract, use the forced labor, any goods or services produced by the forced labor, or any contractors, subcontractors, or suppliers that use the forced labor or any goods or services produced by the forced labor of ethnic Uyghurs in the People's Republic of China.

IN WITNESS WHEREOF, the parties hereto have executed this Change Order as of the date first set forth above.

CITY:

THE CITY OF BUCKEYE,
an Arizona municipal corporation

_____
Dan Cotterman, City Manager

CONTRACTOR:

MOTOROLA SOLUTIONS, INC.

a Delaware corporation

By: _____

Its: Area Sales Manager

ATTEST:

_____
Lucinda Aja, City Clerk

RECOMMENDED:

William Kauppi
_____
William Kauppi, Chief Financial Officer

APPROVED AS TO FORM:

_____
K. Scott McCoy, City Attorney

Adobe Acrobat Sign Transaction Number: CBJCHBCAABAAdzK50950tDfSvTbsT5-9RJFB1jKtcAxq

Attachment "1"

Selected Pages/Portions of Contract

Contract Amendment

CTR046830 Amendment One (1)

Arizona Department of Administration
State Procurement Office
1802 W Jackson St., #100
Phoenix, AZ 85007

CONTRACTOR:	**STATE AGENCY:**
MOTOROLA SOLUTIONS INC 3332 E. Broadway Rd. Phoenix, AZ 85040	AZ Department of Administration (ADOA) State Procurement Office 1400 W Washington St. 3100 Phoenix, AZ 85007
CONTACT: Walter Whately **PHONE:** (520) 457-8604 **EMAIL:** walter.whately@motorolasolutions.com	**CONTACT:** Jim Atkins **PHONE:** (602) 245-8268 **EMAIL:** james.atkins@azdoa.gov

Public Communications Equipment and Services

Pursuant to Section 2-D: Uniform Terms and Conditions, Section 5.0 Contract Changes, 5.1 Amendments, of the above referenced contract, it is hereby amended as follow:

1) In accordance with Special Terms and Conditions, Section 3.1, Term of Contract, the contract is hereby extended through **October 9, 2026**.

ALL OTHER REQUIREMENTS, SPECIFICATIONS, TERMS AND CONDITIONS REMAIN UNCHANGED

* ***Please ensure all required Certificate Of Insurance are updated and submitted to the State Procurement Office.***

ACKNOWLEDGEMENT AND AUTHORIZATION

This amendment shall be fully executed upon the electronic approval in the State e-Procurement system by an authorized representative of the Contractor and applied to the contract in the State e-Procurement system by the Procurement Officer or delegate.

COOPERATIVE CONTRACT PURCHASE ADDENDUM (CCPA)
BETWEEN
THE CITY OF BUCKEYE
AND
MOTOROLA SOLUTIONS, INC.
Contract No. 2024145

CHANGE ORDER # 1

THIS CHANGE ORDER # 1 (this "Change Order") is entered into as of May 3, 2024 between the City of Buckeye, an Arizona municipal corporation (the "City") and Motorola Solutions, Inc., a Delaware corporation (the "Contractor"). This Change Order modifies certain sections of Contract No. 2024145 (the "Contract"), with those sections not expressly modified remaining in full effect pursuant to their terms.

Contract Changes:

1. Contract Price, is amended by increasing the not-to-exceed amount from $500,000.00 to $540,000.00.

Except as amended herein, all provisions of the Contract remain in full force and effect. In the event of any conflict or discrepancy between the terms of this Change Order, the Contract, and any other contract documents, the documents shall govern in that order. This Change Order may be canceled pursuant to the provisions of A.R.S. § 38-511. To the extent applicable under A.R.S. § 35-394, Motorola Solutions Inc., certifies that it does not, and will not for the duration of the Contract, use the forced labor, any goods or services produced by the forced labor, or any contractors, subcontractors, or suppliers that use the forced labor or any goods or services produced by the forced labor of ethnic Uyghurs in the People's Republic of China.

Clickwrap Terms Excluded. In the event the Contractor's terms of sale or service were provided to the City only upon "acceptance" of a "clickwrap" or "clickthrough" agreement, such terms of sale or service shall not be binding upon the City. No oral agreement, "clickwrap" or "clickthrough" agreement or other understanding shall in any way modify a City issued or approved contract or these Standard Terms and Conditions.

The original Contract Price was not-to-exceed (NTE) $500,000.00.
The amended Contract Price after this Change Order is NTE $540,000.00.

IN WITNESS WHEREOF, the parties hereto have executed this Change Order as of the date first set forth above.

CITY:

THE CITY OF BUCKEYE,
an Arizona municipal corporation

Dan Cotterman, City Manager

CONTRACTOR:

MOTOROLA SOLUTIONS, INC.
a Delaware corporation

By: JJ Trweek

Its: Area Sales Manager

Adobe Acrobat Sign Transaction Number CBJCHBCAABAAlH5unQdTYmxN8j7EMvr6S4-uxBMs4Cfu

Exhibit A

COOPERATIVE CONTRACT PURCHASE ADDENDUM (CCPA)
BETWEEN THE CITY OF BUCKEYE
AND
MOTOROLA SOLUTIONS, INC.

PUBLIC COMMUNICATIONS EQUIPMENT AND SERVICES
CONTRACT NO. 2024145

THIS COOPERATIVE CONTRACT PURCHASE ADDENDUM (this "Addendum") is entered into as of February 6, 2024 between the City of Buckeye, an Arizona municipal corporation (the "City"), and Motorola Solutions, Inc., a Delaware corporation (the "Contractor").

WHEREAS, after a competitive procurement process, which is documented in the Award attached hereto as Exhibit A and incorporated herein by reference, The State of Arizona entered into Contract No. CTR046830, dated September 16, 2019 with the Contractor (such contract and subsequent amendments thereto here referred to as the "State of Arizona Contract") The State of Arizona Contract is attached hereto as Exhibit A and incorporated herein by reference; and

WHEREAS, the City is permitted by Section 24-3-16 of the City Procurement Code to make purchases via cooperative purchasing pursuant to a cooperative purchasing contract; and

WHEREAS, the Contractor has made a proposal to the City, which is attached hereto as Exhibit A and incorporated herein by reference (the "Contract"); and

WHEREAS, the City desires to accept the Proposal and enter into contract with the Contractor under the terms and conditions of the State of Arizona Contract, by issuing this Addendum to said contract.

THEREFORE, the City now enters into this Addendum with Contractor, for the goods and services set forth in State of Arizona Contract, which is attached hereto as Exhibit A and incorporated herein by reference. This Addendum incorporates the terms and conditions of the State of Arizona Contract, save that references therein to State of Arizona shall be read to refer to the City of Buckeye. This Addendum shall be effective as of the date set forth below for approval and remain in effect for the remainder of the State of Arizona Contract CTR046830, unless such term is modified or extended pursuant to the terms of the State of Arizona Contract. The Contractor shall provide all goods and services in accordance with the State of Arizona Contract, which is attached hereto as part of Exhibit A, in a total amount not to exceed $500,00.00

FURTHER, this Addendum is subject to cancellation pursuant to ARS §38-511.

FURTHER, to the extent applicable, the Contractor and its subcontractors warrant compliance with all federal immigration laws and regulations that relate to their employees and their compliance with the E-verify requirements under A.R.S. § 23-214(A). The Contractor's or its subcontractors' failure to comply with such warranty shall be deemed a material breach of this Addendum and may result in the termination of this Addendum by the City. The City retains the

	Request for Proposal **Solicitation No.** **ADSPO19-00008376** Description **Public Communications Equipment and Services**	Arizona Department of Administration **State Procurement Office** 100 N 15th Ave , Suite 402 Phoenix, AZ 85007

Attachment 1

Offer and Acceptance Form

SUBMISSION OF OFFER Undersigned hereby offers and agrees to provide Biometric Products and Services to in compliance with the Solicitation indicated above and our Offer indicated by the latest dated version below

Initial Offer	1. **September 4, 2018** date	initial					
Revised Offers.	2. x date #1	initial	3. x date #1	initial	4. x date #1	initial	
	5. x date #4	initial	6. x date #5	initial	7. x date #6	initial	
Best and Final Offer	8. **September 16, 2019** date	initial					

Motorola Solutions, Inc.

Offeror company name

Signature of person authorized to sign Offer — Initials

2900 S. Diablo Way Ste 150

Address

Larry Mabry MSSSI Vice President & Director Sales

Printed name and title

Tempe, AZ 85282

City | State | ZIP

Walter Whatley Senior Account Executive

Contact name and title

36-1115800

Federal tax identifier (EIN or SSN)

Walter.whatley@motorolasolutions.com 520-457-8604

Contact Email Address — Contact phone number

CERTIFICATION. By signature in the above, Offeror certifies that it

1 will not discriminate against any employee or applicant for employment in violation of Federal Executive Order 11246, [Arizona] State Executive Order 2009-9 or A R S §§ 41-1461 through 1465,

2 has not given, offered to give, nor intends to give at any time hereafter any economic opportunity, future employment, gift, loan, gratuity, special discount, trip, favor, or service to a public servant in connection with the submitted offer Failure to provide a valid signature affirming the stipulations required by this clause will result in rejection of the Offer Signing the Offer with a false statement will void the Offer, any resulting contract, and may be subject to legal penalties under law;

3 complies with A R S § 41-3532 when offering electronics or information technology products, services, or maintenance, and

4 is not debarred from, or otherwise prohibited from participating in any contract awarded by federal, state, or local government

ACCEPTANCE OF OFFER State hereby accepts the initial Offer, Revised Offer, or Best and Final Offer identified by number # at the top of this form, and which was dated **date** (the Accepted Offer) Offeror is now bound (as Contractor) to carry out the Work under the attached Contract, of which the Accepted Offer forms a part Contractor is cautioned not to commence any billable work or to provide any material or perform any service under the Contract until Contractor receives the applicable Order or written notice to proceed from Procurement Officer

State's Contract No. is CTR046830 **The effective date of the Contract is: 10-09-2019** **Contract awarded: 10-09-2019**

Procurement Officer signature

Procurement Officer, James Atkins

CITY OF BUCKEYE
Regular Council Meeting
COUNCIL ACTION REPORT

MEETING DATE: 12/17/24	**AGENDA ITEM:** 4.Y. FD - Change Order #1 to Cooperative Purchase Contract Addendum (CCPA) Contract No. 2025155 between the City of Buckeye and Municipal Emergency Services, Inc.
DATE PREPARED: 12/17/24	**DISTRICT NO.:**
STAFF LIAISON: Jake Rhoades, Fire Chief, jrhoades@buckeyeaz.gov, (623) 349-6700	
DEPARTMENT: Fire	**AGENDA ITEM TYPE:** Consent Agenda Items / New Business

ACTION/MOTION: (This language identifies the formal motion to be made by the Council)
Council to take action on Change Order No. 1 to the Cooperative Contract Purchase Addendum (CCPA) (No. 2025155) between the City of Buckeye and Municipal Emergency Services, Inc. for Self-Contained Breathing Apparatus; and authorize the City Manager to execute and deliver said Change Order on behalf of the City.

SUMMARY

PROJECT DESCRIPTION:
The Fire Department is requesting approval of Change Order No. 1 to Cooperative Purchase Contract Addendum (CCPA) No. 2025155 with Municipal Emergency Services, Inc. With exception of increasing the Not to Exceed amount from $225,000 to $325,000, all original terms and conditions of CCPA No. 2025155 remain the same. This increase will allow for budgeted purchases for FY-25 and Self-Contained Breathing Apparatus (SCBA) for new and replacement apparatus. The Public Works' Fleet Division may also use this contract for equipment on fire apparatus that falls under their budget.

Council is not approving any purchase; only approving the maximum dollar amount that can be spent through the life of the contract. By doing so at this time, the Fire Department will not need to return to Council and the contract will be in place to allow for Purchase Orders to be issued as soon as funds are available to expedite the purchase process and allow apparatus to be placed in-service as soon as possible.

BENEFITS:

Allows for flexibility in procuring equipment and supplies in a timely and cost-effective manner to provide necessary public safety services without disruption.

FINANCIAL IMPACT STATEMENT:

This request aligns with the Department's Council approved budget and allows for the execution of funds as projected. The approved budget for FY-25 is $250,000. The additional $75,000 is for projected expenses in FY-26.

CURRENT FISCAL YEAR TOTAL COST:
FY2025 - $250,000

FY2026 - $ 75,000
Total - $325,000

BUDGETED:
Yes

FISCAL YEAR:
FY-25

FUND/DEPARTMENT:
10002144-520518, 10002144-520525, 10002144-541210, 10003173-541210; 10002140-549999

Items related to a project or facility location must include an attached vicinity map for Council Review.
ATTACHMENTS:
CCPA Contract No. 2025155.pdf

COOPERATIVE CONTRACT PURCHASE ADDENDUM (CCPA)
BETWEEN
THE CITY OF BUCKEYE
AND
MUNICIPAL EMERGENCY SERVICES INC.
Contract No. 2025155

CHANGE ORDER # 1

THIS CHANGE ORDER #1 (this "Change Order") is entered into as of _____, 2024 between the City of Buckeye, an Arizona municipal corporation (the "City") and Municipal Emergency Services Inc., a Nevada Corporation (the "Contractor"). This Change Order modifies certain sections of Contract No. 2025155 (the "Contract"), with those sections not expressly modified remaining in full effect pursuant to their terms.

CONTRACT CHANGES:

1. Contract Price, is amended by increasing the not-to-exceed amount by $100,000.00 from $225,000.00 to $325,000.00.

RECITAL OF
CONTRACT TERM (END-DATE)
AND
CONTRACT PRICE:

The Contract term end date is governed by a cooperative purchase contract end-date

The original Contract Price was not-to-exceed (NTE) $225,000.00.

The amended Contract Price at the time of this Change Order was NTE $225,000.00.

The amended Contract Price after this Change Order is and shall be NTE $325,000.00.

For reference purposes, **Attachment "1"** attached hereto includes selected pages/portions of the Contract.

ADDITIONAL PROVISIONS:

Except as amended herein, all provisions of the Contract remain in full force and effect.

In the event of any conflict or discrepancy between the terms of this Change Order, the Contract, and any other contract documents, the documents shall govern in that order.

This Change Order may be canceled pursuant to the provisions of A.R.S. § 38-511.

To the extent applicable under A.R.S. § 35-394, Contractor certifies that it does not, and will not for the duration of the Contract, use the forced labor, any goods or services produced by the forced labor, or any contractors, subcontractors, or suppliers that use the forced labor or any goods or services produced by the forced labor of ethnic Uyghurs in the People's Republic of China.

IN WITNESS WHEREOF, the parties hereto have executed this Change Order as of the date first set forth above.

CITY:

THE CITY OF BUCKEYE,

an Arizona municipal corporation

_____

Dan Cotterman, City Manager

CONTRACTOR:

MUNICIPAL EMERGENCY SERVICES INC.,

a Nevada corporation

By: John Walker

Its: CFO

ATTEST:

_____

Lucinda Aja, City Clerk

RECOMMENDED:

William Kauppi

_____

William Kauppi, Chief Financial Officer

APPROVED AS TO FORM:

_____

K. Scott McCoy, City Attorney

Adobe Acrobat Sign Transaction Number: CBJCHBCAABAAIKI53sqf6QeotmDt1d6jySTtp5FgicDJ

Attachment "1"

Selected Pages/Portions of Contract

COOPERATIVE CONTRACT PURCHASE ADDENDUM (CCPA)
BETWEEN THE CITY OF BUCKEYE
AND
MUNICIPAL EMERGENCY SERVICES, INC

SELF-CONTAINED BREATHING APPARATUS (SCBA) AND BREATHING AIR SYSTEMS WITH RELATED EQUIPMENT
CONTRACT NO. 2025155

THIS COOPERATIVE CONTRACT PURCHASE ADDENDUM (this "Addendum") is entered into as of August 19, 2024, between the City of Buckeye, an Arizona municipal corporation (the "City"), and Municipal Emergency Services Inc., a Nevada Corporation (the "Contractor").

WHEREAS, after a competitive procurement process, which is documented in the Award attached hereto as **Exhibit A** and incorporated herein by reference, Sourcewell Contract entered into Contract No. 011824-MES, dated March 28, 2024 with the Contractor (such contract and subsequent amendments thereto here referred to as the "Sourcewell Contract"), which is attached hereto as **Exhibit A** and incorporated herein by reference; and

WHEREAS, the City is permitted by Section 24-3-16 of the City Procurement Code to make purchases via cooperative purchasing pursuant to a cooperative purchasing contract; and

WHEREAS, the Contractor has made a proposal to the City, which is attached hereto as **Exhibit B** and incorporated herein by reference (the "Contract"); and

WHEREAS, the City desires to accept the Proposal and enter into contract with the Contractor under the terms and conditions of the Sourcewell Contract, by issuing this Addendum to said contract.

THEREFORE, the City now enters into this Addendum with Contractor for the goods and services set forth in the Proposal. This Addendum incorporates the terms and conditions of the Sourcewell Contract, except to the extent superseded herein. All references in the Sourcewell Contract shall be read to refer to the City of Buckeye. This Addendum shall be effective as of the date set forth below for approval and remain in effect for the remainder of the Sourcewell Contract 011824-MES, unless such term is modified or extended pursuant to the terms of the Sourcewell Contract. Payments to the Contractor shall be calculated in accordance with the Fee Schedule, which is attached hereto as part of **Exhibit B**, in a total amount not to exceed $225,000.00.

FURTHER, this Addendum is subject to cancellation pursuant to ARS §38-511.

FURTHER, to the extent applicable, the Contractor and its subcontractors warrant compliance with all federal immigration laws and regulations that relate to their employees and their compliance with the E-verify requirements under A.R.S. § 23-214(A). The Contractor's or its subcontractors' failure to comply with such warranty shall be deemed a material breach of this Addendum and may result in the termination of this Addendum by the City. The City retains the

right to inspect the papers of the Contractor's or its subcontractors' employees who perform any work or services pursuant to this Addendum to ensure compliance with these warranties.

FURTHER, to the extent applicable, the Contractor warrants that it is not participating and will not participate in prohibited activity in contravention of A.R.S. § 35-393.01.

FURTHER, to the extent applicable under ARIZ. REV. STAT. § 35-394, Contractor certifies that it does not currently, and agrees for the duration of this Agreement that it will not use (i) the forced labor of ethnic Uyghurs in the Peoples Republic of China ("ethnic Uyghurs"), (ii) any goods or services produced by the forced labor of ethnic Uyghurs, or (iii) any Contractors, subcontractors, or suppliers that use the forced labor or any goods or services produced by the forced labor of ethnic Uyghurs. If Contractor becomes aware that it is not in compliance with this paragraph, Contractor shall notify the City of the noncompliance within five (5) business days of becoming aware of it. If Contractor fails to provide a written certification that Contractor has remedied the noncompliance within one hundred eighty (180) days after that, this Agreement shall terminate unless the termination date of this Agreement occurs before the end of the remedy period, in which case this Agreement terminates on the Agreement termination date.

FURTHER, the Parties agree that the Addendum and Exhibits thereto shall be governed by State of Arizona law and suits pertaining to the Addendum and Exhibits thereto may only be brought in courts located in Maricopa County, Arizona.

FURTHER, all modifications, including but not limited to service additions and deletions, will be made in writing and with the written agreement of both parties.

FURTHER, in the event of any inconsistency between this Addendum, Sourcewell Contract and **Exhibit B**, the documents shall govern in that order.

CLICKWRAP TERMS EXCLUDED, in the event the Consultant's terms of sale or service were provided to the City only upon "acceptance" of a "clickwrap" or "clickthrough" agreement, such terms of sale or service shall not be binding upon the City. No oral agreement, "clickwrap" or "clickthrough" agreement or other understanding shall in any way modify a City issued or approved contract or the terms of this Cooperative Contract Purchase Addendum (CCPA).

THEREFORE, the Parties have executed this Addendum as of the date first set forth above.

CITY

THE CITY OF BUCKEYE,
an Arizona Municipal corporation

Dan Cotterman, City Manager

CONTRACTOR

MUNICIPAL EMERGENCY SERVICES INC.,
a Nevada corporation

By: _____

Its: CFO

Adobe Acrobat Sign Transaction Number CBJCHBCAABAA3bJla0sQbmxuwXyH3-KKCAOwt1fOJbua

EXHIBIT A
TO
COOPERATIVE CONTRACT PURCHASE ADDENDUM
CONTRACT NO. 2025155

[Sourcewell Contract]

See following page(s).

DocuSign Envelope ID 74AFAC19-8DB9-4FCF-A754-87EBC3339445

Sourcewell

Solicitation Number: RFP #011824

CONTRACT

This Contract is between Sourcewell, 202 12th Street Northeast, P.O. Box 219, Staples, MN 56479 (Sourcewell) and Municipal Emergency Services, Inc., 12 Turnberry Lane, 2nd Floor, Sandy Hook, CT 06482 (Supplier).

Sourcewell is a State of Minnesota local government unit and service cooperative created under the laws of the State of Minnesota (Minnesota Statutes Section 123A.21) that offers cooperative procurement solutions to government entities. Participation is open to eligible federal, state/province, and municipal governmental entities, higher education, K-12 education, nonprofit, tribal government, and other public entities located in the United States and Canada. Sourcewell issued a public solicitation for Self-Contained Breathing Apparatus (SCBA) and Breathing Air Systems with Related Equipment from which Supplier was awarded a contract.

Supplier desires to contract with Sourcewell to provide equipment, products, or services to Sourcewell and the entities that access Sourcewell's cooperative purchasing contracts (Participating Entities).

1. TERM OF CONTRACT

A. EFFECTIVE DATE. This Contract is effective upon the date of the final signature below.

EXPIRATION DATE AND EXTENSION. This Contract expires March 29, 2028, unless it is cancelled sooner pursuant to Article 22. This Contract allows up to three additional one-year extensions upon the request of Sourcewell and written agreement by Supplier. Sourcewell retains the right to consider additional extensions beyond seven years as required under exceptional circumstances.

B. SURVIVAL OF TERMS. Notwithstanding any expiration or termination of this Contract, all payment obligations incurred prior to expiration or termination will survive, as will the following: Articles 11 through 14 survive the expiration or cancellation of this Contract. All other rights will cease upon expiration or termination of this Contract.

2. EQUIPMENT, PRODUCTS, OR SERVICES

CITY OF BUCKEYE
Regular Council Meeting
COUNCIL ACTION REPORT

MEETING DATE: 12/17/24	**AGENDA ITEM:** 4.Z. FD - Change Order #1 to Cooperative Purchase Contract Addendum (CCPA) Contract No. 2025160 between the City of Buckeye and Municipal Emergency Services, Inc.
DATE PREPARED: 12/17/24	**DISTRICT NO.:**
STAFF LIAISON: Jake Rhoades, Fire Chief, jrhoades@buckeyeaz.gov, (623) 349-6700	
DEPARTMENT: Fire	**AGENDA ITEM TYPE:** Consent Agenda Items / New Business

ACTION/MOTION: (This language identifies the formal motion to be made by the Council)
Council to take action on Change Order No. 1 to the Cooperative Contract Purchase Addendum (CCPA) (No. 2025160) between the City of Buckeye and Municipal Emergency Services, Inc. for Personal Protective Equipment; and authorize the City Manager to execute and deliver said Change Order on behalf of the City.

SUMMARY

PROJECT DESCRIPTION:
The Fire Department is requesting approval of Change Order No. 1 to CCPA No. 2025160 with Municipal Emergency Services, Inc. With exception of increasing the Not to Exceed amount from $225,000 to $575,000, all original terms and conditions of CCPA No. 2025160 remain the same. This increase will allow for budgeted purchases for FY-25 and FY-26.

Council is not approving any purchase; only approving the maximum dollar amount that can be spent through the life of the contract. By doing so at this time, the Fire Department will not need to return to Council and the contract will be in place to allow for Purchase Orders to be issued as soon as funds are available to expedite the purchase process and allow apparatus to be placed in-service as soon as possible.

BENEFITS:
Allows for flexibility in procuring equipment and supplies in a timely and cost-effective manner to provide necessary public safety services without disruption.

FINANCIAL IMPACT STATEMENT:

This request aligns with the Department's Council approved budget and allows for the execution of funds as projected. The approved budgeted amount for FY-25 is $275,000. The additional $75,000 is for projected expenses in FY-26.

CURRENT FISCAL YEAR TOTAL COST:
FY2025 - $275,000
FY2026 - $ 75,000

$350,000 total

BUDGETED:
Yes

FISCAL YEAR:
FY-25

FUND/DEPARTMENT:
10002144-522150

Items related to a project or facility location must include an attached vicinity map for Council Review.
ATTACHMENTS:
Contract No. 2025160.pdf

COOPERATIVE CONTRACT PURCHASE ADDENDUM (CCPA)
BETWEEN
THE CITY OF BUCKEYE
AND
MUNICIPAL EMERGENCY SERVICES INC.
Contract No. 2025160

CHANGE ORDER # 1

THIS CHANGE ORDER # 1 (this "Change Order") is entered into as of _____, 2024 between the City of Buckeye, an Arizona municipal corporation (the "City") and Municipal Emergency Services Inc., a Nevada Corporation (the "Contractor"). This Change Order modifies certain sections of Contract No. 2025160 (the "Contract"), with those sections not expressly modified remaining in full effect pursuant to their terms.

CONTRACT CHANGES:

1. Contract Price, is amended by increasing the not-to-exceed amount by $350,000.00 from $225,000.00 to $575,000.00.

RECITAL OF
CONTRACT TERM (END-DATE)
AND
CONTRACT PRICE:

The Contract term end date is governed by a cooperative purchase contract end-date

The original Contract Price was not-to-exceed (NTE) $225,000.00.

The amended Contract Price at the time of this Change Order was NTE $225,000.00.

The amended Contract Price after this Change Order is and shall be NTE $575,000.00.

For reference purposes, **Attachment "1"** attached hereto includes selected pages/portions of the Contract.

ADDITIONAL PROVISIONS:

Except as amended herein, all provisions of the Contract remain in full force and effect.

In the event of any conflict or discrepancy between the terms of this Change Order, the Contract, and any other contract documents, the documents shall govern in that order.

This Change Order may be canceled pursuant to the provisions of A.R.S. § 38-511.

To the extent applicable under A.R.S. § 35-394, Contractor certifies that it does not, and will not for the duration of the Contract, use the forced labor, any goods or services produced by the forced labor, or any contractors, subcontractors, or suppliers that use the forced labor or any goods or services produced by the forced labor of ethnic Uyghurs in the People's Republic of China.

IN WITNESS WHEREOF, the parties hereto have executed this Change Order as of the date first set forth above.

CITY:

THE CITY OF BUCKEYE,

an Arizona municipal corporation

_____

Dan Cotterman, City Manager

CONTRACTOR:

MUNICIPAL EMERGENCY SERVICES INC.,

a Nevada corporation

By: John Walker

Its: CFO

ATTEST:

_____

Lucinda Aja, City Clerk

RECOMMENDED:

William Kauppi

_____

William Kauppi, Chief Financial Officer

APPROVED AS TO FORM:

_____

K. Scott McCoy, City Attorney

Adobe Acrobat Sign Transaction Number: CBJCHBCAABAAjeqoQyNkZa7tXGwfB3YBtWcHcxEC7kJ6

Attachment "1"

Selected Pages/Portions of Contract

COOPERATIVE CONTRACT PURCHASE ADDENDUM (CCPA)
BETWEEN THE CITY OF BUCKEYE
AND
MUNICIPAL EMERGENCY SERVICES, INC.

FIREFIGHTING PPE AND RELATED EQUIPMENT CLEANING
CONTRACT NO. 2025160

THIS COOPERATIVE CONTRACT PURCHASE ADDENDUM (this "Addendum") is entered into as of August 20, 2024, between the City of Buckeye, an Arizona municipal corporation (the "City"), and Municipal Emergency Services Inc., a Nevada Corporation (the "Contractor").

WHEREAS, after a competitive procurement process, which is documented in the Award attached hereto as **Exhibit A** and incorporated herein by reference, Sourcewell Contract entered into Contract No. 010424-MES, dated March 28, 2024 with the Contractor (such contract and subsequent amendments thereto here referred to as the "Sourcewell Contract"), which is attached hereto as **Exhibit A** and incorporated herein by reference; and

WHEREAS, the City is permitted by Section 24-3-16 of the City Procurement Code to make purchases via cooperative purchasing pursuant to a cooperative purchasing contract; and

WHEREAS, the Contractor has made a proposal to the City, which is attached hereto as **Exhibit B** and incorporated herein by reference (the "Contract"); and

WHEREAS, the City desires to accept the Proposal and enter into contract with the Contractor under the terms and conditions of the Sourcewell Contract, by issuing this Addendum to said contract.

THEREFORE, the City now enters into this Addendum with Contractor for the goods and services set forth in the Proposal. This Addendum incorporates the terms and conditions of the Sourcewell Contract, except to the extent superseded herein. All references in the Sourcewell Contract shall be read to refer to the City of Buckeye. This Addendum shall be effective as of the date set forth below for approval and remain in effect for the remainder of the Sourcewell Contract 010424-MES, unless such term is modified or extended pursuant to the terms of the Sourcewell Contract. Payments to the Contractor shall be calculated in accordance with the Fee Schedule, which is attached hereto as part of **Exhibit B**, in a total amount not to exceed $225,000.00.

FURTHER, this Addendum is subject to cancellation pursuant to ARS §38-511.

FURTHER, to the extent applicable, the Contractor and its subcontractors warrant compliance with all federal immigration laws and regulations that relate to their employees and their compliance with the E-verify requirements under A.R.S. § 23-214(A). The Contractor's or its subcontractors' failure to comply with such warranty shall be deemed a material breach of this Addendum and may result in the termination of this Addendum by the City. The City retains the right to inspect the papers of the Contractor's or its subcontractors' employees who perform any work or services pursuant to this Addendum to ensure compliance with these warranties.

FURTHER, to the extent applicable, the Contractor warrants that it is not participating and will not participate in prohibited activity in contravention of A.R.S. § 35-393.01.

FURTHER, to the extent applicable under ARIZ. REV. STAT. § 35-394, Contractor certifies that it does not currently, and agrees for the duration of this Agreement that it will not use (i) the forced labor of ethnic Uyghurs in the Peoples Republic of China ("ethnic Uyghurs"), (ii) any goods or services produced by the forced labor of ethnic Uyghurs, or (iii) any Contractors, subcontractors, or suppliers that use the forced labor or any goods or services produced by the forced labor of ethnic Uyghurs. If Contractor becomes aware that it is not in compliance with this paragraph, Contractor shall notify the City of the noncompliance within five (5) business days of becoming aware of it. If Contractor fails to provide a written certification that Contractor has remedied the noncompliance within one hundred eighty (180) days after that, this Agreement shall terminate unless the termination date of this Agreement occurs before the end of the remedy period, in which case this Agreement terminates on the Agreement termination date.

FURTHER, the Parties agree that the Addendum and Exhibits thereto shall be governed by State of Arizona law and suits pertaining to the Addendum and Exhibits thereto may only be brought in courts located in Maricopa County, Arizona.

FURTHER, all modifications, including but not limited to service additions and deletions, will be made in writing and with the written agreement of both parties.

FURTHER, in the event of any inconsistency between this Addendum, Sourcewell Contract and **Exhibit B**, the documents shall govern in that order.

CLICKWRAP TERMS EXCLUDED, in the event the Consultant's terms of sale or service were provided to the City only upon "acceptance" of a "clickwrap" or "clickthrough" agreement, such terms of sale or service shall not be binding upon the City. No oral agreement, "clickwrap" or "clickthrough" agreement or other understanding shall in any way modify a City issued or approved contract or the terms of this Cooperative Contract Purchase Addendum (CCPA).

THEREFORE, the Parties have executed this Addendum as of the date first set forth above.

CITY

THE CITY OF BUCKEYE,
an Arizona Municipal corporation

Dan Cotterman

Dan Cotterman, City Manager

CONTRACTOR

MUNICIPAL EMERGENCY SERVICES INC.,
a Nevada corporation

By: John Walker

Its: CFO

Adobe Acrobat Sign Transaction Number CBJCHBCAABAAfYuuUzO3zo1yp_pafTaMHFDHo_FIZ63Z

EXHIBIT A
TO
COOPERATIVE CONTRACT PURCHASE ADDENDUM
CONTRACT NO. 2025160

[Sourcewell Contract]

See following page(s).

DocuSign Envelope ID A9631C33-DE4D-4E97-81C3-BE196C7CA362

Sourcewell

Solicitation Number: RFP #010424

CONTRACT

This Contract is between Sourcewell, 202 12th Street Northeast, P.O. Box 219, Staples, MN 56479 (Sourcewell) and Municipal Emergency Services, Inc., 12 Turnberry Lane, 2nd Floor, Sandy Hook, CT 06482 (Supplier).

Sourcewell is a State of Minnesota local government unit and service cooperative created under the laws of the State of Minnesota (Minnesota Statutes Section 123A.21) that offers cooperative procurement solutions to government entities. Participation is open to eligible federal, state/province, and municipal governmental entities, higher education, K-12 education, nonprofit, tribal government, and other public entities located in the United States and Canada. Sourcewell issued a public solicitation for Firefighting Personal Protective Equipment with Related Equipment Cleaning from which Supplier was awarded a contract.

Supplier desires to contract with Sourcewell to provide equipment, products, or services to Sourcewell and the entities that access Sourcewell's cooperative purchasing contracts (Participating Entities).

1. TERM OF CONTRACT

A. EFFECTIVE DATE. This Contract is effective upon the date of the final signature below.

EXPIRATION DATE AND EXTENSION. This Contract expires March 27, 2028, unless it is cancelled sooner pursuant to Article 22. This Contract allows up to three additional one-year extensions upon the request of Sourcewell and written agreement by Supplier. Sourcewell retains the right to consider additional extensions beyond seven years as required under exceptional circumstances.

B. SURVIVAL OF TERMS. Notwithstanding any expiration or termination of this Contract, all payment obligations incurred prior to expiration or termination will survive, as will the following: Articles 11 through 14 survive the expiration or cancellation of this Contract. All other rights will cease upon expiration or termination of this Contract.

2. EQUIPMENT, PRODUCTS, OR SERVICES

CITY OF BUCKEYE
Regular Council Meeting
COUNCIL ACTION REPORT

MEETING DATE: 12/17/24	**AGENDA ITEM:** 4.AA. FD - Cooperative Purchase Contract Addendum (CCPA) Contract No. 2025252 between the City of Buckeye and Stryker Sales, LLC
DATE PREPARED: 12/17/24	**DISTRICT NO.:**
STAFF LIAISON: Jake Rhoades, Fire Chief, jrhoades@buckeyeaz.gov, (623) 349-6700	
DEPARTMENT: Fire	**AGENDA ITEM TYPE:** Consent Agenda Items / New Business

ACTION/MOTION: (This language identifies the formal motion to be made by the Council)
Council to take action on the Cooperative Contract Purchase Addendum (CCPA) (No. 2025252) between the City of Buckeye and Stryker Sales, LLC. for EMS equipment and maintenance services and authorize the City Manager to execute and deliver said CCPA on behalf of the city.

SUMMARY

PROJECT DESCRIPTION:
The Fire Department is requesting approval of Cooperative Contract Purchase Addendum (CCPA) No. 2025252 with Stryker Sales, LLC. This contract will allow for the purchase of EMS supplies, maintenance services and equipment to include cardiac monitors for new and replacement apparatus. The Public Works' Fleet Division may also use this contract for equipment on fire apparatus that falls under their budget.

Council is only approving the maximum dollar amount that can be spent through the life of the contract. By doing so at this time, the Fire Department will not need to return to Council in this fiscal year as the contract will be in place to allow for Purchase Orders to be issued as soon as funds are available to expedite the purchase process and allow apparatus to be placed in-service as soon as possible.

BENEFITS:
Allows for flexibility in procuring equipment and supplies in a timely and cost-effective manner to provide necessary public safety services without disruption.

FINANCIAL IMPACT STATEMENT:

This request aligns with the Department's Council approved budget and allows for the execution of funds as projected.

CURRENT FISCAL YEAR TOTAL COST:
$400,000

BUDGETED:
Yes

FISCAL YEAR:
FY-25

FUND/DEPARTMENT:

10002140-541210, 10002140-549999, 10002142-520525, 1002142-522153, 10003173-541210

Items related to a project or facility location must include an attached vicinity map for Council Review.
ATTACHMENTS:
Contract No. 2025252.pdf

COOPERATIVE CONTRACT PURCHASE ADDENDUM (CCPA)
BETWEEN THE CITY OF BUCKEYE
AND
STRYKER SALES, LLC

CRITICAL CARE AND EMS EQUIPMENT
CONTRACT NO. 2025252

THIS COOPERATIVE CONTRACT PURCHASE ADDENDUM (this "Addendum") is entered into as of _____, between the City of Buckeye, an Arizona municipal corporation (the "City"), and Stryker Sales LLC., a Michigan corporation (the "Contractor").

WHEREAS, after a competitive procurement process, which is documented in the Award attached hereto as **Exhibit A** and incorporated herein by reference, Sourcewell Contract entered into Contract No. 041823-STY, dated September 15, 2023 with the Contractor (such contract and subsequent amendments thereto here referred to as the "Sourcewell Contract"), which is attached hereto as **Exhibit A** and incorporated herein by reference; and

WHEREAS, the City is permitted by Section 24-3-16 of the City Procurement Code to make purchases via cooperative purchasing pursuant to a cooperative purchasing contract; and

WHEREAS, the Sourcewell Agreement contains a schedule of discounts for the purchase of equipment, which is attached hereto as **Exhibit B** and incorporated herein by reference (the "Fee Schedule"); and

WHEREAS, the City desires to enter into contract with the Contractor under the terms and conditions of the Sourcewell Contract, by issuing this Addendum to said contract.

THEREFORE, the City now enters into this Addendum with Contractor for the goods and services set forth in the Fee Schedule. This Addendum incorporates the terms and conditions of the Sourcewell Contract, except to the extent superseded herein. All references in the Sourcewell Contract shall be read to refer to the City of Buckeye. This Addendum shall be effective as of the date set forth below for approval and remain in effect for the remainder of the Sourcewell Contract 041823-STY, unless such term is modified or extended pursuant to the terms of the Sourcewell Contract. Payments to the Contractor shall be calculated in accordance with the Fee Schedule, which is attached hereto as part of **Exhibit B**, in a total amount not to exceed $400,000.00.

FURTHER, this Addendum is subject to cancellation pursuant to ARS §38-511.

FURTHER, to the extent applicable, the Contractor and its subcontractors warrant compliance with all federal immigration laws and regulations that relate to their employees and their compliance with the E-verify requirements under A.R.S. § 23-214(A). The Contractor's or its subcontractors' failure to comply with such warranty shall be deemed a material breach of this Addendum and may result in the termination of this Addendum by the City. The City retains the right to inspect the papers of the Contractor's or its subcontractors' employees who perform any work or services pursuant to this Addendum to ensure compliance with these warranties.

FURTHER, to the extent applicable, the Contractor warrants that it is not participating and will not participate in prohibited activity in contravention of A.R.S. § 35-393.01.

FURTHER, to the extent applicable under ARIZ. REV. STAT. § 35-394, Contractor certifies that it does not currently, and agrees for the duration of this Agreement that it will not use (i) the forced labor of ethnic Uyghurs in the Peoples Republic of China ("ethnic Uyghurs"), (ii) any goods or services produced by the forced labor of ethnic Uyghurs, or (iii) any Contractors, subcontractors, or suppliers that use the forced labor or any goods or services produced by the forced labor of ethnic Uyghurs. If Contractor becomes aware that it is not in compliance with this paragraph, Contractor shall notify the City of the noncompliance within five (5) business days of becoming aware of it. If Contractor fails to provide a written certification that Contractor has remedied the noncompliance within one hundred eighty (180) days after that, this Agreement shall terminate unless the termination date of this Agreement occurs before the end of the remedy period, in which case this Agreement terminates on the Agreement termination date.

FURTHER, the Parties agree that the Addendum and Exhibits thereto shall be governed by State of Arizona law and suits pertaining to the Addendum and Exhibits thereto may only be brought in courts located in Maricopa County, Arizona.

FURTHER, all modifications, including but not limited to service additions and deletions, will be made in writing and with the written agreement of both parties.

FURTHER, in the event of any inconsistency between this Addendum, Sourcewell Contract and **Exhibit B**, the documents shall govern in that order.

CLICKWRAP TERMS EXCLUDED, in the event the Contractor's terms of sale or service were provided to the City only upon "acceptance" of a "clickwrap" or "clickthrough" agreement, such terms of sale or service shall not be binding upon the City. No oral agreement, "clickwrap" or "clickthrough" agreement or other understanding shall in any way modify a City issued or approved contract or the terms of this Cooperative Contract Purchase Addendum (CCPA).

THEREFORE, the Parties have executed this Addendum as of the date first set forth above.

CITY

THE CITY OF BUCKEYE,
an Arizona Municipal corporation

_____
Dan Cotterman, City Manager

CONTRACTOR

STRYKER SALES LLC.,
a Michigan corporation

By: _____

Title: Manager, Strategic Pricing & Contracts

ATTEST:

Lucinda Aja, City Clerk

RECOMMENDED:

William Kauppi

William Kauppi, Chief Financial Officer

APPROVED AS TO FORM:

K. Scott McCoy, City Attorney

Adobe Acrobat Sign Transaction Number: CBJCHBCAABAA7bsBt7SJAi14Z6jmZUd5iJLsDGqHDTyK

EXHIBIT A
TO
COOPERATIVE CONTRACT PURCHASE ADDENDUM
CONTRACT NO. 2025252

[Sourcewell Contract]

See following page(s).

DocuSign Envelope ID: D480AE7D-7D7E-416C-A1A1-EEAB75214029

Sourcewell

Solicitation Number: 041823

CONTRACT

This Contract is between Sourcewell, 202 12th Street Northeast, P.O. Box 219, Staples, MN 56479 (Sourcewell) and Stryker Sales, LLC, through its Medical Division, 11811 Willows Road NE, Redmond, WA 98052 (Supplier).

Sourcewell is a State of Minnesota local government unit and service cooperative created under the laws of the State of Minnesota (Minnesota Statutes Section 123A.21) that offers cooperative procurement solutions to government entities. Participation is open to eligible federal, state/province, and municipal governmental entities, higher education, K-12 education, nonprofit, tribal government, and other public entities located in the United States and Canada. Sourcewell issued a public solicitation for Critical Care and EMS Equipment from which Supplier was awarded a contract.

Supplier desires to contract with Sourcewell to provide equipment, products, or services to Sourcewell and the entities that access Sourcewell's cooperative purchasing contracts (Participating Entities).

1. TERM OF CONTRACT

A. EFFECTIVE DATE. This Contract is effective upon the date of the final signature below.

EXPIRATION DATE AND EXTENSION. This Contract expires June 30, 2027, unless it is cancelled sooner pursuant to Article 22. This Contract allows up to three additional one-year extensions upon the request of Sourcewell and written agreement by Supplier. Sourcewell retains the right to consider additional extensions beyond seven years as required under exceptional circumstances.

B. SURVIVAL OF TERMS. Notwithstanding any expiration or termination of this Contract, all payment obligations incurred prior to expiration or termination will survive, as will the following: Articles 11 through 14 survive the expiration or cancellation of this Contract. All other rights will cease upon expiration or termination of this Contract.

DocuSign Envelope ID: D480AE7D-7D7E-416C-A1A1-EEAB75214029

2. EQUIPMENT, PRODUCTS, OR SERVICES

A. EQUIPMENT, PRODUCTS, OR SERVICES. Supplier will provide the Equipment, Products, or Services as stated in its Proposal submitted under the Solicitation Number listed above. Supplier's Equipment, Products, or Services Proposal (Proposal) is attached and incorporated into this Contract.

All Equipment and Products provided under this Contract must be new and the current model. Supplier may offer close-out or refurbished Equipment or Products if they are clearly indicated in Supplier's product and pricing list. Unless agreed to by the Participating Entities in advance, Equipment or Products must be delivered as operational to the Participating Entity's site.

This Contract offers an indefinite quantity of sales, and while substantial volume is anticipated, sales and sales volume are not guaranteed.

B. WARRANTY. Supplier warrants that (i) Supplier has good title to Equipment shipped directly to Participating Entities, free of all liens, claims, and encumbrances; (ii) the Equipment will, at the time of manufacture, in all material respects have been manufactured in conformance with the Equipment specifications; and (iii) the Equipment will in all material respects, at the time of shipment, meet the technical specifications set forth in the FDA-approved or cleared labeling. EXCEPT AS SET FORTH IN THE IMMEDIATELY PRECEDING SENTENCE, SUPPLIER HEREBY EXPRESSLY DISCLAIMS ANY AND ALL EXPRESS OR IMPLIED WARRANTIES REGARDING THE PRODUCTS INCLUDING, BUT NOT LIMTED TO, AND FITNESS FOR A PARTICULAR PURPOSE.

C. DEALERS, DISTRIBUTORS, AND/OR RESELLERS. Upon Contract execution and throughout the Contract term, Supplier must provide to Sourcewell a current means to validate or authenticate Supplier's authorized dealers, distributors, or resellers relative to the Equipment, Products, and Services offered under this Contract, which will be incorporated into this Contract by reference. It is the Supplier's responsibility to ensure Sourcewell receives the most current information.

3. PRICING

All Equipment, Products, or Services under this Contract will be priced at or below the price stated in Supplier's Proposal. If the Agreement is a multi-year contract, Supplier may increase pricing no more than once annually. Such price increase shall be incorporated by amendment to this Agreement and signed by Sourcewell and Supplier.

When providing pricing quotes to Participating Entities, all pricing quoted must reflect a Participating Entity's total cost of acquisition. This means that the quoted cost is for delivered Equipment, Products, and Services that are operational for their intended purpose, and includes all costs to the Participating Entity's requested delivery location.

DocuSign Envelope ID: D480AE7D-7D7E-416C-A1A1-EEAB75214029

Regardless of the payment method chosen by the Participating Entity, the total cost associated with any purchase option of the Equipment, Products, or Services must always be disclosed in the pricing quote to the applicable Participating Entity at the time of purchase.

A. SHIPPING AND SHIPPING COSTS. All delivered Equipment and Products must be properly packaged. Damaged Equipment and Products may be rejected. If the damage is not readily apparent at the time of delivery, Supplier must permit the Equipment and Products to be returned in accordance with the return policy, incorporated by reference, at no cost to Sourcewell or its Participating Entities. Participating Entities reserve the right to inspect the Equipment and Products within thirty (30) days after delivery where circumstances or conditions prevent effective inspection of the Equipment and Products at the time of delivery. In the event of the delivery of nonconforming Equipment and Products, the Participating Entity will notify the Supplier as soon as possible and the Supplier will replace nonconforming Equipment and Products with conforming Equipment and Products that are acceptable to the Participating Entity. All shipping will be FOB destination, freight prepaid and added to the invoice.

Supplier must arrange for and pay for the return shipment on Equipment and Products that arrive in a defective or inoperable condition.

Sourcewell may declare the Supplier in breach of this Contract if the Supplier intentionally delivers substandard or inferior Equipment or Products.

B. SALES TAX. Each Participating Entity is responsible for supplying the Supplier with valid tax-exemption certification(s). When ordering, a Participating Entity must indicate if it is a tax-exempt entity.

C. HOT LIST PRICING. At any time during this Contract, Supplier may offer a specific selection of Equipment, Products, or Services at discounts greater than those listed in the Contract. When Supplier determines it will offer Hot List Pricing, it must be submitted electronically to Sourcewell in a line-item format. Equipment, Products, or Services may be added or removed from the Hot List at any time through a Sourcewell Price and Product Change Form as defined in Article 4 below.

Hot List program and pricing may also be used to discount and liquidate close-out and discontinued Equipment and Products as long as those close-out and discontinued items are clearly identified as such. Current ordering process and administrative fees apply. Hot List Pricing must be published and made available to all Participating Entities.

4. PRODUCT AND PRICING CHANGE REQUESTS

Supplier may request Equipment, Product, or Service changes, additions, or deletions at any time. All requests must be made in writing by submitting a signed Sourcewell Price and Product

DocuSign Envelope ID: D480AE7D-7D7E-416C-A1A1-EEAB75214029

Change Request Form to the assigned Sourcewell Supplier Development Administrator. This approved form is available from the assigned Sourcewell Supplier Development Administrator. At a minimum, the request must:

- Identify the applicable Sourcewell contract number;
- Clearly specify the requested change;
- Provide sufficient detail to justify the requested change;
- Individually list all Equipment, Products, or Services affected by the requested change, along with the requested change (e.g., addition, deletion, price change); and
- Include a complete restatement of pricing documentation in Microsoft Excel with the effective date of the modified pricing, or product addition or deletion. The new pricing restatement must include all Equipment, Products, and Services offered, even for those items where pricing remains unchanged.

A fully executed Sourcewell Price and Product Change Request Form will become an amendment to this Contract and will be incorporated by reference.

5. PARTICIPATION, CONTRACT ACCESS, AND PARTICIPATING ENTITY REQUIREMENTS

A. PARTICIPATION. Sourcewell's cooperative contracts are available and open to public and nonprofit entities across the United States; such as federal, state, municipal, K-12 and higher education, tribal government, and other public entities.

The benefits of this Contract should be available to all Participating Entities that can legally access the Equipment, Products, or Services under this Contract. A Participating Entity's authority to access this Contract is determined through its cooperative purchasing, interlocal, or joint powers laws. Any entity accessing benefits of this Contract will be considered a Service Member of Sourcewell during such time of access. Supplier understands that a Participating Entity's use of this Contract is at the Participating Entity's sole convenience and Participating Entities reserve the right to obtain like Equipment, Products, or Services from any other source.

Supplier is responsible for familiarizing its sales and service forces with Sourcewell contract use eligibility requirements and documentation and will encourage potential participating entities to join Sourcewell. Sourcewell reserves the right to add and remove Participating Entities to its roster during the term of this Contract.

B. PUBLIC FACILITIES. Supplier's employees may be required to perform work at government-owned facilities, including schools. Supplier's employees and agents must conduct themselves in a professional manner while on the premises, and in accordance with Participating Entity policies and procedures, and all applicable laws.

DocuSign Envelope ID: D480AE7D-7D7E-416C-A1A1-EEAB75214029

6. PARTICIPATING ENTITY USE AND PURCHASING

A. ORDERS AND PAYMENT. To access the contracted Equipment, Products, or Services under this Contract, a Participating Entity must clearly indicate to Supplier that it intends to access this Contract; however, order flow and procedure will be developed jointly between Sourcewell and Supplier. Typically, a Participating Entity will issue an order directly to Supplier or its authorized subsidiary, distributor, dealer, or reseller. If a Participating Entity issues a purchase order, it may use its own forms, but the purchase order should clearly note the applicable Sourcewell contract number. All Participating Entity orders under this Contract must be issued prior to expiration or cancellation of this Contract; however, Supplier performance, Participating Entity payment obligations, and any applicable warranty periods or other Supplier or Participating Entity obligations may extend beyond the term of this Contract. Payment terms are net thirty (30).

Supplier's acceptable forms of payment are included in its attached Proposal. Participating Entities will be solely responsible for payment and Sourcewell will have no liability for any unpaid invoice of any Participating Entity.

B. ADDITIONAL TERMS AND CONDITIONS/PARTICIPATING ADDENDUM. Additional terms and conditions to a purchase order, or other required transaction documentation, may be negotiated between a Participating Entity and Supplier, such as job or industry-specific requirements, legal requirements (e.g., affirmative action or immigration status requirements), or specific local policy requirements. Some Participating Entities may require the use of a Participating Addendum, the terms of which will be negotiated directly between the Participating Entity and the Supplier or its authorized dealers, distributors, or resellers, as applicable. Any negotiated additional terms and conditions must never be less favorable to the Participating Entity than what is contained in this Contract.

C. SPECIALIZED SERVICE REQUIREMENTS. In the event that the Participating Entity requires service or specialized performance requirements not addressed in this Contract (such as e-commerce specifications, specialized delivery requirements, or other specifications and requirements), the Participating Entity and the Supplier may enter into a separate, standalone agreement, apart from this Contract. Sourcewell, including its agents and employees, will not be made a party to a claim for breach of such agreement.

D. TERMINATION OF ORDERS. Participating Entities may terminate an order, in whole or in part, immediately upon notice to Supplier in the event of any of the following events:

1. The Participating Entity fails to receive funding or appropriation from its governing body at levels sufficient to pay for the equipment, products, or services to be purchased; or
2. Federal, state, or provincial laws or regulations prohibit the purchase or change the Participating Entity's requirements.

DocuSign Envelope ID: D480AE7D-7D7E-416C-A1A1-EEAB75214029

E. GOVERNING LAW AND VENUE. The governing law and venue for any action related to a Participating Entity's order will be determined by the Participating Entity making the purchase.

7. CUSTOMER SERVICE

A. PRIMARY ACCOUNT REPRESENTATIVE. Supplier will assign an Account Representative to Sourcewell for this Contract and must provide prompt notice to Sourcewell if that person is changed. The Account Representative will be responsible for:

- Maintenance and management of this Contract;
- Timely response to all Sourcewell and Participating Entity inquiries; and
- Business reviews to Sourcewell and Participating Entities, if applicable.

B. BUSINESS REVIEWS. Supplier must perform a minimum of one business review with Sourcewell per contract year. The business review will cover sales to Participating Entities, pricing and contract terms, administrative fees, sales data reports, performance issues, supply issues, customer issues, and any other necessary information.

8. REPORT ON CONTRACT SALES ACTIVITY AND ADMINISTRATIVE FEE PAYMENT

A. CONTRACT SALES ACTIVITY REPORT. Each calendar quarter, Supplier must provide a contract sales activity report (Report) to the Sourcewell Supplier Development Administrator assigned to this Contract. Reports are due no later than 45 days after the end of each calendar quarter. A Report must be provided regardless of the number or amount of sales during that quarter (i.e., if there are no sales, Supplier must submit a report indicating no sales were made).

The Report must contain the following fields:

- Participating Entity Name (e.g., City of Staples Highway Department);
- Participating Entity Physical Street Address;
- Participating Entity City;
- Participating Entity State/Province;
- Participating Entity Zip/Postal Code;
- Participating Entity Contact Name;
- Participating Entity Contact Email Address;
- Participating Entity Contact Telephone Number;
- Sourcewell Assigned Entity/Participating Entity Number;
- Item Purchased Description;
- Item Purchased Price;
- Sourcewell Administrative Fee Applied; and
- Date Purchase was invoiced/sale was recognized as revenue by Supplier.

DocuSign Envelope ID: D480AE7D-7D7E-416C-A1A1-EEAB75214029

B. ADMINISTRATIVE FEE. In consideration for the support and services provided by Sourcewell, the Supplier will pay an administrative fee to Sourcewell on all Equipment, Products, and Services provided to Participating Entities. The Administrative Fee must be included in, and not added to, the pricing. Supplier may not charge Participating Entities more than the contracted price to offset the Administrative Fee.

The Supplier will submit payment to Sourcewell for the percentage of administrative fee stated in the Proposal multiplied by the total sales of all Equipment, Products, and Services purchased by Participating Entities under this Contract during each calendar quarter. Payments should note the Supplier's name and Sourcewell-assigned contract number in the memo; and must be mailed to the address above "Attn: Accounts Receivable" or remitted electronically to Sourcewell's banking institution per Sourcewell's Finance department instructions. Payments must be received no later than 45 calendar days after the end of each calendar quarter.

Supplier agrees to cooperate with Sourcewell in auditing transactions under this Contract to ensure that the administrative fee is paid on all items purchased under this Contract.

In the event the Supplier is delinquent in any undisputed administrative fees, Sourcewell reserves the right to cancel this Contract and reject any proposal submitted by the Supplier in any subsequent solicitation. In the event this Contract is cancelled by either party prior to the Contract's expiration date, the administrative fee payment will be due no more than 30 days from the cancellation date.

9. AUTHORIZED REPRESENTATIVE

Sourcewell's Authorized Representative is its Chief Procurement Officer.

Supplier's Authorized Representative is the person named in the Supplier's Proposal. If Supplier's Authorized Representative changes at any time during this Contract, Supplier must promptly notify Sourcewell in writing.

10. AUDIT, ASSIGNMENT, AMENDMENTS, WAIVER, AND CONTRACT COMPLETE

A. AUDIT. Pursuant to Minnesota Statutes Section 16C.05, subdivision 5, the books, records, documents, and accounting procedures and practices relevant to this Contract are subject to examination by Sourcewell or the Minnesota State Auditor for a minimum of six years from the end of this Contract. This clause extends to Participating Entities as it relates to business conducted by that Participating Entity under this Contract.

B. ASSIGNMENT. Neither party may assign or otherwise transfer its rights or obligations under this Contract without the prior written consent of the other party and a fully executed assignment agreement. Such consent will not be unreasonably withheld.

DocuSign Envelope ID: D480AE7D-7D7E-416C-A1A1-EEAB75214029

C. AMENDMENTS. Any amendment to this Contract must be in writing and will not be effective until it has been duly executed by the parties.

D. WAIVER. Failure by either party to take action or assert any right under this Contract will not be deemed a waiver of such right in the event of the continuation or repetition of the circumstances giving rise to such right. Any such waiver must be in writing and signed by the parties.

E. CONTRACT COMPLETE. This Contract represents the complete agreement between the parties. No other understanding regarding this Contract, whether written or oral, may be used to bind either party. For any conflict between the attached Proposal and the terms set out in Articles 1-22 of this Contract, the terms of Articles 1-22 will govern.

F. RELATIONSHIP OF THE PARTIES. The relationship of the parties is one of independent contractors, each free to exercise judgment and discretion with regard to the conduct of their respective businesses. This Contract does not create a partnership, joint venture, or any other relationship such as master-servant, or principal-agent.

11. INDEMNITY AND HOLD HARMLESS

Supplier must indemnify, defend, save, and hold Sourcewell and its Participating Entities , including their agents and employees, harmless from any third-party claims or causes of action incurred by Sourcewell or its Participating Entities, arising out of any act or omission in the performance of this Contract by the Supplier or its agents or employees; this indemnification includes injury or death to person(s) or property alleged to have been caused by some defect in the Equipment, Products, or Services under this Contract to the extent the Equipment, Product, or Service has been used according to its specifications. The foregoing indemnification does not apply to any claims arising from: (i) the combination of any Stryker Product with one or more non-Stryker products wherein such combination is the sole basis of the claim; (ii) the use of the Products contrary to their labeling, manuals, and/or instructions for use or (iii) modification of any Product by any person other than Stryker without Stryker's express written authorization. Stryker will have no liability hereunder unless it is notified promptly of any such claim and given control of the defense and any settlement thereof; however, any claim that obligates Sourcewell for payment of any kind may not be settled without prior consultation and written approval by the Sourcewell Board of Directors Sourcewell's responsibility will be governed by the State of Minnesota's Tort Liability Act (Minnesota Statutes Chapter 466) and other applicable law.

12. GOVERNMENT DATA PRACTICES

Supplier and Sourcewell must comply with the Minnesota Government Data Practices Act, Minnesota Statutes Chapter 13, as it applies to all data provided by or provided to Sourcewell

DocuSign Envelope ID: D480AE7D-7D7E-416C-A1A1-EEAB75214029

under this Contract and as it applies to all data created, collected, received, maintained, or disseminated by the Supplier under this Contract.

13. INTELLECTUAL PROPERTY, PUBLICITY, MARKETING, AND ENDORSEMENT

A. INTELLECTUAL PROPERTY

1. *Grant of License.* During the term of this Contract:
   Subject to Section 13(B), Sourcewell grants to Supplier a royalty-free, non-exclusive right and license to use the trademark(s) provided to Supplier in certain advertising and promotional materials for the purpose of marketing Sourcewell's relationship with Supplier for use in the United States only and solely in the format provided in Exhibit A. For the avoidance of doubt, the license granted by Supplier to Sourcewell shall be limited to the following promotional materials:
   i. Sourcewell's Contract Directory located on Sourcewell's website and/or in a printed format for distribution by Sourcewell;
   ii. Sourcewell's Cooperative Purchasing (through Buy Sourcewell) located on Sourcewell's website;
   iii. Tradeshow or other conference banners prepared and approved by Sourcewell;
   iv. Award announcement emails; and
   v. Any reseller or distributor advertising or promotional flyers for distribution by Sourcewell.

2. *Limited Right of Sublicense*. The right and license granted herein includes a limited right of each party to grant sublicenses to their respective subsidiaries, distributors, dealers, resellers, marketing representatives, and agents (collectively "Permitted Sublicensees") in advertising and promotional materials for the purpose of marketing the Parties' relationship to Participating Entities. The sublicense granted hereunder will be subject to the terms and conditions of this Article and shall not exceed the rights granted pursuant to Section 1.b. of this Article 13. A party shall approve each use of the other party's trademarks by its respective Permitted Sublicensees. Each party will be responsible for any breach of this Article by any of their respective sublicensees.

3. *Use; Quality Control.*
   a. Neither party may alter the other party's trademarks from the form provided and must immediately comply with removal requests as to specific uses of its trademarks or logos.
   b. Each party agrees to use, and to cause its Permitted Sublicensees to use, the other party's trademarks only in good faith and in a dignified manner consistent with such party's use of the trademarks. Upon written notice to the breaching party, the breaching party has 30 days of the date of the written notice to cure the breach or the license will be terminated.

4. *Termination*. Upon the termination of this Contract for any reason, each party, including Permitted Sublicensees, will have 30 days to remove all Trademarks from signage, websites, and the like bearing the other party's name or logo (excepting Sourcewell's pre-printed catalog of suppliers which may be used until the next printing). Each party must return all

DocuSign Envelope ID: D480AE7D-7D7E-416C-A1A1-EEAB75214029

marketing and promotional materials, including signage, provided by the other party or dispose of it according to requesting party's written directions.

B. PUBLICITY. Any publicity regarding the subject matter of this Contract must not be released without prior written approval from the Authorized Representatives. Publicity includes notices, informational pamphlets, press releases, research, reports, signs, and similar public notices prepared by or for the Supplier individually or jointly with others, or any subcontractors, with respect to the program, publications, or services provided resulting from this Contract.

C. MARKETING. Any direct advertising, marketing, or offers to Participating Entities that offer Equipment, Products, or Services available under this Contract and utilizes the terms of this Contract while offering pricing lower than this Contract, must be approved by Sourcewell. Send all approval requests to the Sourcewell Supplier Development Administrator assigned to this Contract.

D. ENDORSEMENT. The Supplier must not claim that Sourcewell endorses its Equipment, Products, or Services.

14. GOVERNING LAW, JURISDICTION, AND VENUE

The substantive and procedural laws of the State of Minnesota will govern this Contract. Venue for all legal proceedings arising out of this Contract, or its breach, must be in the appropriate state court in Todd County, Minnesota or federal court in Fergus Falls, Minnesota.

15. FORCE MAJEURE

Neither party to this Contract will be held responsible for delay or default caused by acts of God or other conditions that are beyond that party's reasonable control. A party defaulting under this provision must provide the other party prompt written notice of the default.

16. SEVERABILITY

If any provision of this Contract is found by a court of competent jurisdiction to be illegal, unenforceable, or void then both parties will be relieved from all obligations arising from that provision. If the remainder of this Contract is capable of being performed, it will not be affected by such determination or finding and must be fully performed.

17. PERFORMANCE, DEFAULT, AND REMEDIES

A. PERFORMANCE. During the term of this Contract, the parties will monitor performance and address unresolved contract issues as follows:

DocuSign Envelope ID: D480AE7D-7D7E-416C-A1A1-EEAB75214029

1. *Notification.* The parties must promptly notify each other of any known dispute and work in good faith to resolve such dispute within a reasonable period of time. If necessary, Sourcewell and the Supplier will jointly develop a short briefing document that describes the issue(s), relevant impact, and positions of both parties.
2. *Escalation.* If parties are unable to resolve the issue in a timely manner, as specified above, either Sourcewell or Supplier may escalate the resolution of the issue to a higher level of management. The Supplier will have 30 calendar days to cure an outstanding issue.
3. *Performance while Dispute is Pending*. Notwithstanding the existence of a dispute, the Supplier must continue without delay to carry out all of its responsibilities under the Contract that are not affected by the dispute. If the Supplier fails to continue without delay to perform its responsibilities under the Contract, in the accomplishment of all undisputed work, the Supplier will bear any additional costs incurred by Sourcewell and/or its Participating Entities as a result of such failure to proceed.

B. DEFAULT AND REMEDIES. Either of the following constitutes cause to declare this Contract, or any Participating Entity order under this Contract, in default:

1. Nonperformance of contractual requirements, or
2. A material breach of any term or condition of this Contract.

The party claiming default must provide written notice of the default, with 30 calendar days to cure the default. Time allowed for cure will not diminish or eliminate any liability for liquidated or other damages. If the default remains after the opportunity for cure, the non-defaulting party may:

- Exercise any remedy provided by law or equity, or
- Terminate the Contract or any portion thereof, including any orders issued against the Contract.

18. INSURANCE

A. REQUIREMENTS. At its own expense, Supplier must maintain insurance policy(ies) in effect at all times during the term of this Contract with insurance company(ies) licensed or authorized to do business in the State of Minnesota having an "AM BEST" rating of A- or better, with the following required coverage and limits of insurance:

1. *Workers' Compensation and Employer's Liability.*
Workers' Compensation: As required by any applicable law or regulation.
Employer's Liability Insurance: must be provided in the required amounts listed below:

Required limits:
$2,000,000 each accident for bodily injury by accident
$2,000,000 policy limit for bodily injury by disease

DocuSign Envelope ID: D480AE7D-7D7E-416C-A1A1-EEAB75214029

$2,000,000 each employee for bodily injury by disease

2. *Commercial General Liability Insurance.* Supplier will maintain insurance covering its operations, with coverage on an occurrence basis, and must be subject to terms no less broad than the Insurance Services Office ("ISO") Commercial General Liability Form CG0001 (2001 or newer edition), or equivalent. Coverage must include liability arising from premises, operations, bodily injury and property damage, independent contractors, products-completed operations including construction defect, contractual liability, blanket contractual liability, and personal injury and advertising injury. All required limits, terms and conditions of coverage must be maintained during the term of this Contract.

Required Limits:
$3,000,000 each occurrence Bodily Injury and Property Damage
$2,000,000 Personal and Advertising Injury
$4,000,000 aggregate for products liability-completed operations
$4,000,000 general aggregate

3. *Commercial Automobile Liability Insurance.* During the term of this Contract, Supplier will maintain insurance covering all owned, hired, and non-owned automobiles in limits of liability indicated below. The coverage must be subject to terms no less broad than ISO Business Auto Coverage Form CA 0001 (2010 edition or newer), or equivalent.

Required Limits:
$3,000,000 each accident, combined single limit

4. *Umbrella Insurance*.

Intentionally omitted

5. *Network Security and Privacy Liability Insurance*. During the term of this Contract, Supplier will maintain coverage for network security and privacy liability. The coverage may be endorsed on another form of liability coverage or written on a standalone policy. The insurance must cover claims which may arise from failure of Supplier's network security resulting in, but not limited to, computer attacks, unauthorized access, disclosure of not public data – including but not limited to, confidential or private information, transmission of a computer virus, or denial of service.

Required limits:
$2,000,000 per occurrence or claim
$2,000,000 annual aggregate

Failure of Supplier to maintain the required insurance will constitute a material breach entitling Sourcewell to immediately terminate this Contract for default.

DocuSign Envelope ID: D480AE7D-7D7E-416C-A1A1-EEAB75214029

B. CERTIFICATES OF INSURANCE. Prior to commencing under this Contract, Supplier must furnish to Sourcewell a certificate of insurance, as evidence of the insurance required under this Contract. Prior to expiration of the policy(ies), renewal certificates must be mailed to Sourcewell, 202 12th Street Northeast, P.O. Box 219, Staples, MN 56479 or sent to the Sourcewell Supplier Development Administrator assigned to this Contract. The certificates must be issued by a person authorized by the insurer(s) to bind coverage on their behalf.

Failure to request certificates of insurance by Sourcewell, or failure of Supplier to provide certificates of insurance, in no way limits or relieves Supplier of its duties and responsibilities in this Contract.

C. ADDITIONAL INSURED ENDORSEMENT AND PRIMARY AND NON-CONTRIBUTORY INSURANCE CLAUSE. Supplier agrees to include Sourcewell and its Participating Entities, including their officers, agents, and employees, as an additional insured under the Supplier's commercial general liability insurance policy with respect to vicarious liability of Sourcewell and/or its Participating Entities which may arise out of activities, "operations," or "work" performed by Supplier, and products and completed operations of Supplier. The policy provision(s) or endorsement(s) must further provide that except with respect to any claim or loss that arise from the negligence or willful misconduct of Sourcewell and/or its Participating Entities, the commercial general liability insurance coverage is primary and not excess over or contributory with any other valid, applicable, and collectible insurance or self-insurance in force for the additional insureds.

D. WAIVER OF SUBROGATION. Supplier waives and must require (by endorsement or otherwise) all its insurers to waive subrogation rights against Sourcewell and other additional insureds for losses paid under the workers' compensation and employer's liability and commercial automobile liability insurance policies required by this Contract. The waiver must apply to all deductibles and/or self-insured retentions applicable to such insurance maintained by the Supplier or its subcontractors. Where permitted by law, Supplier must require similar written express waivers of subrogation and insurance clauses from each of its subcontractors.

E. UMBRELLA/EXCESS LIABILITY/SELF-INSURED RETENTIONINTENTIONALLY OMITTED.

F. SELF-INSURANCE. Notwithstanding any other insurance requirements within this Agreement to the contrary, to the extent allowed by applicable law or regulation, Supplier shall be permitted to comply with these insurance requirements through a program of self-insurance

19. COMPLIANCE

A. LAWS AND REGULATIONS. All Equipment, Products, or Services provided under this Contract must comply fully with applicable federal laws and regulations, and with the laws in the states and provinces in which the Equipment, Products, or Services are sold.

DocuSign Envelope ID: D480AE7D-7D7E-416C-A1A1-EEAB75214029

B. LICENSES. Supplier must maintain a valid and current status on all required federal, state/provincial, and local licenses, bonds, and permits required for the operation of the business that the Supplier conducts with Sourcewell and Participating Entities.

This Agreement is the entire, final, complete, and fully integrated agreement between Sourcewell **and** Supplier for the benefit of any Participating Entity with respect to the subject matter hereof and supersedes any prior agreements or communications between the parties, whether written, oral, electronic or otherwise.

20. BANKRUPTCY, DEBARMENT, OR SUSPENSION CERTIFICATION

Supplier certifies and warrants that it is not in bankruptcy or that it has previously disclosed in writing certain information to Sourcewell related to bankruptcy actions. If at any time during this Contract Supplier declares bankruptcy, Supplier must immediately notify Sourcewell in writing.

Supplier certifies and warrants that neither it nor its principals are presently debarred, suspended, proposed for debarment, declared ineligible, or voluntarily excluded from programs operated by the State of Minnesota; the United States federal government or the Canadian government, as applicable; or any Participating Entity. Supplier certifies and warrants that neither it nor its principals have been convicted of a criminal offense related to the subject matter of this Contract. Supplier further warrants that it will provide immediate written notice to Sourcewell if this certification changes at any time.

21. PROVISIONS FOR NON-UNITED STATES FEDERAL ENTITY PROCUREMENTS UNDER UNITED STATES FEDERAL AWARDS OR OTHER AWARDS

Participating Entities that use United States federal grant or FEMA funds to purchase goods or services from this Contract may be subject to additional requirements including the procurement standards of the Uniform Administrative Requirements, Cost Principles and Audit Requirements for Federal Awards, 2 C.F.R. § 200. Participating Entities may have additional requirements based on specific funding source terms or conditions. Within this Article, all references to “federal” should be interpreted to mean the United States federal government. The following list only applies when a Participating Entity accesses Supplier’s Equipment, Products, or Services with United States federal funds.

A. EQUAL EMPLOYMENT OPPORTUNITY. Except as otherwise provided under 41 C.F.R. § 60, all contracts that meet the definition of “federally assisted construction contract” in 41 C.F.R. § 60-1.3 must include the equal opportunity clause provided under 41 C.F.R. §60-1.4(b), in accordance with Executive Order 11246, “Equal Employment Opportunity” (30 FR 12319, 12935, 3 C.F.R. §, 1964-1965 Comp., p. 339), as amended by Executive Order 11375, “Amending Executive Order 11246 Relating to Equal Employment Opportunity,” and implementing regulations at 41 C.F.R. § 60, “Office of Federal Contract Compliance Programs, Equal

DocuSign Envelope ID: D480AE7D-7D7E-416C-A1A1-EEAB75214029

Employment Opportunity, Department of Labor." The equal opportunity clause is incorporated herein by reference.

B. DAVIS-BACON ACT, AS AMENDED (40 U.S.C. § 3141-3148). When required by federal program legislation, all prime construction contracts in excess of $2,000 awarded by non-federal entities must include a provision for compliance with the Davis-Bacon Act (40 U.S.C. § 3141-3144, and 3146-3148) as supplemented by Department of Labor regulations (29 C.F.R. § 5, "Labor Standards Provisions Applicable to Contracts Covering Federally Financed and Assisted Construction"). In accordance with the statute, contractors must be required to pay wages to laborers and mechanics at a rate not less than the prevailing wages specified in a wage determination made by the Secretary of Labor. In addition, contractors must be required to pay wages not less than once a week. The non-federal entity must place a copy of the current prevailing wage determination issued by the Department of Labor in each solicitation. The decision to award a contract or subcontract must be conditioned upon the acceptance of the wage determination. The non-federal entity must report all suspected or reported violations to the federal awarding agency. The contracts must also include a provision for compliance with the Copeland "Anti-Kickback" Act (40 U.S.C. § 3145), as supplemented by Department of Labor regulations (29 C.F.R. § 3, "Contractors and Subcontractors on Public Building or Public Work Financed in Whole or in Part by Loans or Grants from the United States"). The Act provides that each contractor or subrecipient must be prohibited from inducing, by any means, any person employed in the construction, completion, or repair of public work, to give up any part of the compensation to which he or she is otherwise entitled. The non-federal entity must report all suspected or reported violations to the federal awarding agency. Supplier must be in compliance with all applicable Davis-Bacon Act provisions.

C. CONTRACT WORK HOURS AND SAFETY STANDARDS ACT (40 U.S.C. § 3701-3708). Where applicable, all contracts awarded by the non-federal entity in excess of $100,000 that involve the employment of mechanics or laborers must include a provision for compliance with 40 U.S.C. §§ 3702 and 3704, as supplemented by Department of Labor regulations (29 C.F.R. § 5). Under 40 U.S.C. § 3702 of the Act, each contractor must be required to compute the wages of every mechanic and laborer on the basis of a standard work week of 40 hours. Work in excess of the standard work week is permissible provided that the worker is compensated at a rate of not less than one and a half times the basic rate of pay for all hours worked in excess of 40 hours in the work week. The requirements of 40 U.S.C. § 3704 are applicable to construction work and provide that no laborer or mechanic must be required to work in surroundings or under working conditions which are unsanitary, hazardous or dangerous. These requirements do not apply to the purchases of supplies or materials or articles ordinarily available on the open market, or contracts for transportation or transmission of intelligence. This provision is hereby incorporated by reference into this Contract. Supplier certifies that during the term of an award for all contracts by Sourcewell resulting from this procurement process, Supplier must comply with applicable requirements as referenced above.

DocuSign Envelope ID: D480AE7D-7D7E-416C-A1A1-EEAB75214029

D. RIGHTS TO INVENTIONS MADE UNDER A CONTRACT OR AGREEMENT. If the federal award meets the definition of "funding agreement" under 37 C.F.R. § 401.2(a) and the recipient or subrecipient wishes to enter into a contract with a small business firm or nonprofit organization regarding the substitution of parties, assignment or performance of experimental, developmental, or research work under that "funding agreement," the recipient or subrecipient must comply with the requirements of 37 C.F.R. § 401, "Rights to Inventions Made by Nonprofit Organizations and Small Business Firms Under Government Grants, Contracts and Cooperative Agreements," and any implementing regulations issued by the awarding agency. Supplier certifies that during the term of an award for all contracts by Sourcewell resulting from this procurement process, Supplier must comply with applicable requirements as referenced above.

E. CLEAN AIR ACT (42 U.S.C. § 7401-7671Q.) AND THE FEDERAL WATER POLLUTION CONTROL ACT (33 U.S.C. § 1251-1387). Contracts and subgrants of amounts in excess of $150,000 require the non-federal award to agree to comply with all applicable standards, orders or regulations issued pursuant to the Clean Air Act (42 U.S.C. § 7401- 7671q) and the Federal Water Pollution Control Act as amended (33 U.S.C. § 1251- 1387). Violations must be reported to the Federal awarding agency and the Regional Office of the Environmental Protection Agency (EPA). Supplier certifies that during the term of this Contract will comply with applicable requirements as referenced above.

F. DEBARMENT AND SUSPENSION (EXECUTIVE ORDERS 12549 AND 12689). A contract award (see 2 C.F.R. § 180.220) must not be made to parties listed on the government wide exclusions in the System for Award Management (SAM), in accordance with the OMB guidelines at 2 C.F.R. §180 that implement Executive Orders 12549 (3 C.F.R. § 1986 Comp., p. 189) and 12689 (3 C.F.R. § 1989 Comp., p. 235), "Debarment and Suspension." SAM Exclusions contains the names of parties debarred, suspended, or otherwise excluded by agencies, as well as parties declared ineligible under statutory or regulatory authority other than Executive Order 12549. Supplier certifies that neither it nor its principals are presently debarred, suspended, proposed for debarment, declared ineligible, or voluntarily excluded from participation by any federal department or agency.

G. BYRD ANTI-LOBBYING AMENDMENT, AS AMENDED (31 U.S.C. § 1352). Suppliers must file any required certifications. Suppliers must not have used federal appropriated funds to pay any person or organization for influencing or attempting to influence an officer or employee of any agency, a member of Congress, officer or employee of Congress, or an employee of a member of Congress in connection with obtaining any federal contract, grant, or any other award covered by 31 U.S.C. § 1352. Suppliers must disclose any lobbying with non-federal funds that takes place in connection with obtaining any federal award. Such disclosures are forwarded from tier to tier up to the non-federal award. Suppliers must file all certifications and disclosures required by, and otherwise comply with, the Byrd Anti-Lobbying Amendment (31 U.S.C. § 1352).

DocuSign Envelope ID: D480AE7D-7D7E-416C-A1A1-EEAB75214029

H. RECORD RETENTION REQUIREMENTS. To the extent applicable, Supplier must comply with the record retention requirements detailed in 2 C.F.R. § 200.333. The Supplier further certifies that it will retain all records as required by 2 C.F.R. § 200.333 for a period of 3 years after grantees or subgrantees submit final expenditure reports or quarterly or annual financial reports, as applicable, and all other pending matters are closed.

I. ENERGY POLICY AND CONSERVATION ACT COMPLIANCE. To the extent applicable, Supplier must comply with the mandatory standards and policies relating to energy efficiency which are contained in the state energy conservation plan issued in compliance with the Energy Policy and Conservation Act.

J. BUY AMERICAN PROVISIONS COMPLIANCE. To the extent applicable, Supplier must comply with all applicable provisions of the Buy American Act. Purchases made in accordance with the Buy American Act must follow the applicable procurement rules calling for free and open competition.

K. ACCESS TO RECORDS (2 C.F.R. § 200.336). Supplier agrees that duly authorized representatives of a federal agency must have access to any books, documents, papers and records of Supplier that are directly pertinent to Supplier's discharge of its obligations under this Contract for the purpose of making audits, examinations, excerpts, and transcriptions. The right also includes timely and reasonable access to Supplier's personnel for the purpose of interview and discussion relating to such documents.

L. PROCUREMENT OF RECOVERED MATERIALS (2 C.F.R. § 200.322). A non-federal entity that is a state agency or agency of a political subdivision of a state and its contractors must comply with Section 6002 of the Solid Waste Disposal Act, as amended by the Resource Conservation and Recovery Act. The requirements of Section 6002 include procuring only items designated in guidelines of the Environmental Protection Agency (EPA) at 40 C.F.R. § 247 that contain the highest percentage of recovered materials practicable, consistent with maintaining a satisfactory level of competition, where the purchase price of the item exceeds $10,000 or the value of the quantity acquired during the preceding fiscal year exceeded $10,000; procuring solid waste management services in a manner that maximizes energy and resource recovery; and establishing an affirmative procurement program for procurement of recovered materials identified in the EPA guidelines.

M. FEDERAL SEAL(S), LOGOS, AND FLAGS. The Supplier cannot use the seal(s), logos, crests, or reproductions of flags or likenesses of Federal agency officials without specific pre-approval.

N. NO OBLIGATION BY FEDERAL GOVERNMENT. The U.S. federal government is not a party to this Contract or any purchase by a Participating Entity and is not subject to any obligations or liabilities to the Participating Entity, Supplier, or any other party pertaining to any matter resulting from the Contract or any purchase by an authorized user.

DocuSign Envelope ID: D480AE7D-7D7E-416C-A1A1-EEAB75214029

O. PROGRAM FRAUD AND FALSE OR FRAUDULENT STATEMENTS OR RELATED ACTS. The Contractor acknowledges that 31 U.S.C. 38 (Administrative Remedies for False Claims and Statements) applies to the Supplier's actions pertaining to this Contract or any purchase by a Participating Entity.

P. FEDERAL DEBT. The Supplier certifies that it is non-delinquent in its repayment of any federal debt. Examples of relevant debt include delinquent payroll and other taxes, audit disallowance, and benefit overpayments.

Q. CONFLICTS OF INTEREST. The Supplier must notify the U.S. Office of General Services, Sourcewell, and Participating Entity as soon as possible if this Contract or any aspect related to the anticipated work under this Contract raises an actual or potential conflict of interest (as described in 2 C.F.R. Part 200). The Supplier must explain the actual or potential conflict in writing in sufficient detail so that the U.S. Office of General Services, Sourcewell, and Participating Entity are able to assess the actual or potential conflict; and provide any additional information as necessary or requested.

R. U.S. EXECUTIVE ORDER 13224. The Supplier, and its subcontractors, must comply with U.S. Executive Order 13224 and U.S. Laws that prohibit transactions with and provision of resources and support to individuals and organizations associated with terrorism.

S. PROHIBITION ON CERTAIN TELECOMMUNICATIONS AND VIDEO SURVEILLANCE SERVICES OR EQUIPMENT. To the extent applicable, Supplier certifies that during the term of this Contract it will comply with applicable requirements of 2 C.F.R. § 200.216.

T. DOMESTIC PREFERENCES FOR PROCUREMENTS. To the extent applicable, Supplier certifies that during the term of this Contract will comply with applicable requirements of 2 C.F.R. § 200.322.

22. CANCELLATION

Sourcewell or Supplier may cancel this Contract at any time, with or without cause, upon 60 days' written notice to the other party. However, Sourcewell may cancel this Contract immediately upon discovery of a material defect in any certification made in Supplier's Proposal. Cancellation of this Contract does not relieve either party of financial, product, or service obligations incurred or accrued prior to cancellation.

Sourcewell

By: DocuSigned by: Jeremy Schwartz C0FD2A139D06489...

Jeremy Schwartz

Title: Chief Procurement Officer

Date: 9/14/2023 | 4:41 PM CDT

Stryker Sales, LLC, through its Medical Division

By: DocuSigned by: Anne Mullally 6CE0778B706449D...

Anne Mullally

Title: Vice President and General Manager

Date: 9/15/2023 | 6:56 AM PDT

Approved:

By: DocuSigned by: Chad Coauette 48BAF71B0894454...

Chad Coauette

Title: Executive Director/CEO

Date: 9/15/2023 | 8:58 AM CDT

DocuSign Envelope ID: D480AE7D-7D7E-416C-A1A1-EEAB75214029

Exhibit A

Stryker Trademark Usage

stryker

Logo position, spacing and size

Position

- Stryker logo must appear prominent and not compete with word marks, surrounding text, images or other visual elements.
- Our preferred logo placement is horizontal; however, Sourcewell can position Stryker logo vertically.
- When horizontally positioned, place Stryker logo in either the top left or top right corner of the layout.
- When horizontally positioned, Stryker prefers Sourcewell places Stryker logo above all other text and in a position that doesn't appear aligned with any visual elements other than a color field and/or dimensional frame.
- When vertically positioned, Stryker logo must be the most dominant element on the layout (for example, up the side of a trade show banner).
- Avoid overuse of Stryker logo by using only one logo per layout and refrain from using our logo multiple times across a multi-page document.
- Stryker logo must appear on the first page or section of a document.

Clear space

- Provide clear space around our logo to clearly identify it as our master brand.
- The diagram below demonstrates the minimum space required; clear space is equal to 1.5 times the height of our logo.

Minimum size

- When using Stryker logo, maintain a minimum size of 1" (25.4mm) in print applications to maintain brand presence.
- The goal is to maximize the size of Stryker logo in proportion to the size of the layout.



Clear space



1" (25.4mm)

Minimum size

Do not:

- use any color except black for Stryker logo.
- use Stryker logo with a registration mark (®).
- show Stryker logo upside down or reflected.
- angle or tilt except at a 90° angle.
- violate clear space in any way.
- show Stryker logo at minimum size in a large-scale layout.
- show Stryker logo oversized on a layout relative to the scale of the other visual elements.
- use Stryker logo with other text; instead, spell out "Stryker" or "Stryker's" when using Stryker name.
- translate Stryker logo; however, Sourcewell can translate our Stryker in text.
- include Stryker logo as part of another trademark or service mark.
- alter any part of Stryker logo.
- skew or distort Stryker logo.
- animate Stryker logo; except in videos.
- add a line above or below Stryker logo.
- crop Stryker logo.
- use Stryker logo at a low resolution.
- use Stryker logo vertically with text that has more dominance.
- add shadows or shading.
- add a border.
- use an outline.
- use on unapproved background colors.
- place in a shape (for example, a circle or triangle) unless placed on a square or rectangular.
- place business, function, region, service names or word marks on the same line as Stryker logo.

RFP 041823 - Critical Care and EMS Equipment

Vendor Details

Company Name:	Stryker Sales, LLC
Does your company conduct business under any other name? If yes, please state:	Howmedica Osteonics Corp
Address:	2825 Airview Blvd. Kalamazoo, MI 49002
Contact:	Ted Harris
Email:	ted.harris@stryker.com
Phone:	615-512-4890
HST#:	38-2902424

Submission Details

Created On:	Monday March 06, 2023 16:19:47
Submitted On:	Friday April 14, 2023 13:58:59
Submitted By:	Bobby Flanagan
Email:	Robert.Flanagan@stryker.com
Transaction #:	34aa1fbb-1f4f-420c-825f-d4a930e802a5
Submitter's IP Address:	64.208.103.178

Specifications

Table 1: Proposer Identity & Authorized Representatives

General Instructions (applies to all Tables) Sourcewell prefers a brief but thorough response to each question. Do not merely attach additional documents to your response without also providing a substantive response. Do not leave answers blank; respond "N/A" if the question does not apply to you (preferably with an explanation).

Line Item	Question	Response *	
1	Proposer Legal Name (one legal entity only): (In the event of award, will execute the resulting contract as "Supplier")	Stryker Sales, LLC, through its Medical Division	*
2	Identify all subsidiary entities of the Proposer whose equipment, products, or services are included in the Proposal.	Stryker Sales, LLC, through its Medical Division	*
3	Identify all applicable assumed names or DBA names of the Proposer or Proposer's subsidiaries in Line 1 or Line 2 above.	Not applicable	*
4	Provide your CAGE code or Unique Entity Identifier (SAM):	75AF1, [No CAGE code for SYK SALES CORP; All Govt Contracts through SYK Corp]	*
5	Proposer Physical Address:	11811 Willows Road NE Redmond, WA, 98052	*
6	Proposer website address (or addresses):	https://www.stryker.com/us/en/emergency-care.html	*
7	Proposer's Authorized Representative (name, title, address, email address & phone) (The representative must have authority to sign the "Proposer's Assurance of Compliance" on behalf of the Proposer and, in the event of award, will be expected to execute the resulting contract):	Jennifer Collins Manager, Strategic Pricing and Contracts Tel: 425 867 4685 Email: jennifer.collins@stryker.com Address: 11811 Willows Road NE Redmond, WA, 98052	*
8	Proposer's primary contact for this proposal (name, title, address, email address & phone):	Ted Harris, Manager, Strategic Accounts Tel: 615 512 4890 Email: ted.harris@stryker.com Address: 11811 Willows Rd. NE, Redmond, WA 98052	*
9	Proposer's other contacts for this proposal, if any (name, title, address, email address & phone):	Maggie Wang, Associate Manager, Bids & Proposals Tel: 425-867-4216 Email: maggie.wang1@stryker.com Address: 11811 Willow Rd NE, Redmond, WA 98052	

Table 2: Company Information and Financial Strength

Line Item	Question	Response *	

10	Provide a brief history of your company, including your company's core values, business philosophy, and industry longevity related to the requested equipment, products or services.	About Stryker Stryker is one of the world's leading medical technology companies and, together with our customers, is driven to make healthcare better. We offer innovative products and services in Orthopaedics, Medical and Surgical, and Neurotechnology and Spine that help improve patient and hospital outcomes. As the pioneer in portable defibrillation and monitoring technology, Stryker's Emergency Care business continues to define the standard for cardiac emergency care equipment, solutions and services. We are the world leader in developing, manufacturing, selling and servicing emergency care products. The company pioneered defibrillation technology over 68 years ago and continues to design and develop advanced emergency medical devices for in-hospital and out-ofhospital use. The company's LIFEPAK defibrillators have been carried to the top of Mount Everest and launched into orbit on the International Space Station. More than 800,000 units are in use today on fire and rescue rigs, ambulances, hospital crash carts and in thousands of public access locations worldwide. Global Presence Stryker serves a global market of thousands of customers in over 100 countries that use our products every day to protect their communities. We are well-positioned to continue serving the worldwide medical community for generations to come. Stryker Emergency Care employs over 1,000 team members worldwide. Approximately 700 of these team members are based in Redmond, WA. Vision and Mission We have been involved in emergency medical care for more than 68 years and lead the industry in developing products that monitor or treat patients in emergency medical situations. We develop technologies and design devices according to the unique needs of our customers and our goal is to provide complete solutions for cardiorespiratory emergencies. Everything is designed for customers, to work with them- whether it is accessories, disposables, flexible energy dosing or data management solutions that help them capture patient data and learn from it to improve patient care. Our approach to product development is with the values our customers expect front and center: quality, innovation, durability and reliability. We hold ourselves to rigorous quality and innovation standards, and firmly believe that good enough is never good enough when you are talking about devices used on a daily basis in a variety of emergency care environments. We are always innovating our product and clinical technologies and looking for ways to improve our processes— because our customers and their patients depend on it. MISSION: Together with our customers, we make healthcare better.	*
11	What are your company's expectations in the event of an award?	If Stryker is the winner, Stryker will negotiate in good faith mutually benefitial terms following award issuance.	*
12	Demonstrate your financial strength and stability with meaningful data. This could include such items as financial statements, SEC filings, credit and bond ratings, letters of credit, and detailed reference letters. Upload supporting documents (as applicable) in the document upload section of your response.	Stryker Corporation Annual Report has been uploaded to the attachment section. Stryker Sales, LLC, through its Medical Division is a wholly owned affilate of Stryker Corporation.	*
13	What is your US market share for the solutions that you are proposing?	In 2022, our prehospital business captured 69% of market share. We are unique in that we have solutions that equip the back of the ambulance with everything from monitor/defibrillaotrs, to cots and fasteners, to data solutions, and beyond. We are unmatched when it comes to the breadth of products and service that we can provide our customers. Our flagship product lines have captured majority market share in their respective categories as described below: • LIFEPAK 15 (monitor/defibrillators in pre-hospital): 55% • LIFEPAK CR2, HeartSine (AEDs in pre-hospital and public access): 30% • Transport equipment (cots, fasteners, chairs in prehospital): 94% • LUCAS 3 (mechanical chest compression systems in pre-hospital): 80%	*
14	What is your Canadian market share for the solutions that you are proposing?	This submittal reflects U.S. proposal and applies to US participating entities only. Products, services and T&Cs outside the U.S. may vary by country. Please refer to Proposal submitted by Stryker Canada team for information.	*
15	Has your business ever petitioned for bankruptcy protection? If so, explain in detail.	No. Stryker has never petitioned for bankruptcy protection. Instead, the whole Stryker corperation has persevered, delivered outstanding sales growth and made progress on our strategy for many years, making the Stryker brand stronger than ever.	*

16	How is your organization best described: is it a manufacturer, a distributor/dealer/reseller, or a service provider? Answer whichever question (either a) or b) just below) best applies to your organization. a) If your company is best described as a distributor/dealer/reseller (or similar entity), provide your written authorization to act as a distributor/dealer/reseller for the manufacturer of the products proposed in this RFP. If applicable, is your dealer network independent or company owned? b) If your company is best described as a manufacturer or service provider, describe your relationship with your sales and service force and with your dealer network in delivering the products and services proposed in this RFP. Are these individuals your employees, or the employees of a third party?	Stryker is the manufacturer and service provider of equipment as proposed in this RFP. All technical support, trainings and education, ProCare services will be conducted by Stryker employees. No third party like distributor/dealer/reseller will be involved.	*
17	If applicable, provide a detailed explanation outlining the licenses and certifications that are both required to be held, and actually held, by your organization (including third parties and subcontractors that you use) in pursuit of the business contemplated by this RFP.	Stryker's Medical division certifies that it is the original equipment manufacturer (OEM) or sole source distributor of parts for Emergency Care products. All parts are either manufactured by Stryker or outside suppliers and are new, tested and approved for use on Stryker's products. Our field service team uses OEM parts for repairs and has exclusive use of certain proprietary tools for diagnostics and repairs. Please refers to Section 6 of the pdf. proposal for relevant sole source certificatations.	*
18	Provide all "Suspension or Debarment" information that has applied to your organization during the past ten years.	No suspension or Debarment applies to Stryker.	*

Table 3: Industry Recognition & Marketplace Success

Line Item	Question	Response *	
19	Describe any relevant industry awards or recognition that your company has received in the past five years	At Stryker, we owe our achievements to our dedicated employees. Below are some recent honors we've received for our business results, workplace culture and philanthropic activities: • 2022 Best Workplaces for Millennials: : Great Places to Work • 2022 Best Workplaces in Manufacturing and Production: : Great Places to Work • 2022 100 Best Companies to Work For: : Great Places to Work • 2022 Best Workplaces Canada: Great Places to Work • 2022 World's Best Workplaces: Great Places to Work • 2022 Don Clifton Strengths-Based Culture Award • 2022 Best Places to Work for LGBTQ+ Equality: 100% Corporate Equality Index • 2021 Military Friendly Employer: Silver • 2021 Reader's Choice A Top 50 Employer: Woman Engineer Magazine • 2021 Reader's Choice A Top 50 Employer: Minority Engineer Magazine • 2022 Companies that Care: People Magazine • 2021 Change the Future: Fortune Please see a full list of company awards at this link: www.stryker.com/us/en/about/awards/awards.html	*
20	What percentage of your sales are to the governmental sector in the past three years	75-80%	*
21	What percentage of your sales are to the education sector in the past three years	2-3%	*
22	List any state, provincial, or cooperative purchasing contracts that you hold. What is the annual sales volume for each of these contracts over the past three years?	NASPO (No Transport on Contract) 2020:$15.3M, 2021: $15.4M, 2022: $15.9M Savvik(Treatment and Transport) 2020: $5.3M 2021: $14.2M 2022: $16.5M	*
23	List any GSA contracts or Standing Offers and Supply Arrangements (SOSA) that you hold. What is the annual sales volume for each of these contracts over the past three years?	GSA Contract: Federal Supply Schedule (FSS) 2020: $61.6M 2021: $66.8M 2022: $51M SOSA Contract: none	*

Table 4: References/Testimonials

Line Item 24. Supply reference information from three customers who are eligible to be Sourcewell participating entities.

Entity Name *	Contact Name *	Phone Number *	
Mount Vernon Fire Dept.	Deborah Norman	(914)490-0131 Email: dnorman@cmvny.com	*
Sable Altura Fire Dept.	Chief Rich Solomon	(303)364-7187 Email: Solomon.Rich@sablealturafire.org	*
Akron Fire and EMS	Chief Chris Karakis	(330)903-1101 (mobile)	*

Table 5: Top Five Government or Education Customers

Line Item 25. Provide a list of your top five government, education, or non-profit customers (entity name is optional), including entity type, the state or province the entity is located in, scope of the project(s), size of transaction(s), and dollar volumes from the past three years.

Entity Name	Entity Type *	State / Province *	Scope of Work *	Size of Transactions *	Dollar Volume Past Three Years *	
NEW YORK CITY FIRE DEPT AND MED EQUIP	Government	New York - NY	FDNY replaced their Philips defibrillators with LIFEPAK 15s and LIFEPAK CR2s, and replaced Ferno cots with Stryker power stretchers and loading systems.	$35,697	$39,767,262	*
NEW YORK CITY OFFICE OF EMER AND MGMT	Government	New York - NY	Purchased LIFEPAK 15 defibrillator/monitors to combat the pandemic.	$4,707,735	$23,538,676	*
MIAMI DADE FIRE RESCUE	Government	Florida - FL	Miami Dade replaced 99 LIFEPAK 15 defibrillators in 2021, and replaced 72 power cots in 2022. They purchased 125 LIFEPAK CR2 AEDs in 2022 and added 20 Lucas 3 chest compression devices to their fleet. Miami Dade airport purchased 40 CR2 AEDs, and Miami Dade Fleet Management purchased 50 CR2 AEDs.	$4,365	$7,468,898	*
ESCAMBIA COUNTY EMS	Government	Florida - FL	Escambia County purchased 50+ LIFEPAK 15 defibrillator/monitors, 37 Power Pro XT cots, 140 CR2 AEDs, 50 Lucas chest compression devices, and ProCare service plans for all of the above.	$51,124	$7,464,160	*
SOUTH DAKOTA DEPT OF HEALTH	Government	South Dakota - SD	SD Statewide LIFEPAK standardization project	$182,532	$7,118,773	*

Table 6: Ability to Sell and Deliver Service

Describe your company's capability to meet the needs of Sourcewell participating entities across the US and Canada, as applicable. Your response should address in detail at least the following areas: locations of your network of sales and service providers, the number of workers (full-time equivalents) involved in each sector, whether these workers are your direct employees (or employees of a third party), and any overlap between the sales and service functions.

Line Item	Question	Response *	

26	Sales force.	Stryker Emergency Care is committed to providing unmatched professional support through our Sales and Field Service Representatives who are strategically located throughout the U.S. to make us a customer centered organization. Our pre-hospital account manager team is the largest in comparison to our competitors with 291 Emergency Care account managers supporting customer needs. While everyone will be responsive and timely during the purchase process, Stryker has built a model that allows us to truly serve and partner with customers before, during, and after the sales.	*
27	Dealer network or other distribution methods.	Stryker is the manufacturer and service provider of equipment as proposed in this RFP. No dealer or distributor will be involved.	*
28	Service force.	Stryker has made in our Field Service team that provides on-site product maintenance and repair. This team consists of 310 ProCare technicians nationwide and allows us to take the approach of conducting necessary equipment repairs at your location versus requiring you to ship devices in and wait for replacement units. Repairs by the numbers Enhance equipment life: Of those surveyed, 85 percent of EMS customers reported the life of their equipment has been extended because of ProCare Services. Equipment experts: ProCare technicians receive over 200 hours of equipment training, and have an average tenure of 12 years with Stryker. Proactive approach:In 2019, ProCare Services did preventive maintenance inspections on over 83,450 pieces of EMS equipment. Increased efficiency: 86 percent of EMS customers surveyed reported they are able to operate more efficiently because of ProCare Services. The Quality Management System of Stryker's Medical division is ISO 13485:2016 certified.	*
29	Describe the ordering process. If orders will be handled by distributors, dealers or others, explain the respective roles of the Proposer and others.	If ordering Capital Goods 1. Customer calls(phone at 800 327 0770 option 1) or emails our Customer Service Team to get the contact information of the account manager for their region. 2. Customer reaches out to Account Manager letting them know what is needed. 3. Account Manager creates quote for items. 4. Customer creates PO meeting all requirements based on the quote. 5. PO is submitted back to the Account Manager 6. Account Manager submits order and confirms with customer. If ordering parts, accessories or disposables: 1. Customer can call or email our Customer Service Team for a price quote. 2. PO meeting all requirements is created by customer based on pricing quote. 3. PO emailed in to medicalcustomerservice@stryker.com 4. Customer Service Team would process and send confirmation. If ordering services: Stryker won't be using any distributors / subcontracts for ProCare Contract execution. All work will be done locally or in our factory depot by Stryker employees. Stryker provides copies of work orders describing all work performed, parts used and labor time involved with the repair. Customers can also access on our online ProCare portal should they choose to do so.	*
30	Describe in detail the process and procedure of your customer service program, if applicable. Include your response-time capabilities and commitments, as well as any incentives that help your providers meet your stated service goals or promises.	Stryker ProCare is the largest on-site OEM team in the pre-hospital space for maintaining, repairing, and serving customers equipment needs in North America. Our competitive difference is that we provide people who handle all device needs at your facilities versus being required to organize, track, box, and ship devices back to corporate headquarters for maintenance and repair.	*
31	Describe your ability and willingness to provide your products and services to Sourcewell participating entities in the United States.	Stryker is able to provide products and accessories to entities where 3rd party carrier can reach in US.	*
32	Describe your ability and willingness to provide your products and services to Sourcewell participating entities in Canada.	Not applicable	*
33	Identify any geographic areas of the United States or Canada that you will NOT be fully serving through the proposed contract.	This submittal reflects U.S. proposal and applies to US participating entities only. Products, services and T&Cs outside the U.S. may vary by country. Please refer to Proposal submitted by Stryker Canada team for information.	*

34	Identify any Sourcewell participating entity sectors (i.e., government, education, not-for-profit) that you will NOT be fully serving through the proposed contract. Explain in detail. For example, does your company have only a regional presence, or do other cooperative purchasing contracts limit your ability to promote another contract?	Stryker is able to serve through the proposed contract throughout the whole US.	*
35	Define any specific contract requirements or restrictions that would apply to our participating entities in Hawaii and Alaska and in US Territories.	There's no additional requirements or restrictions to entities in Hawaii and Alaska. As there is no local Hawaii stock available for these Stryker items and these items will be shipped from our mainland warehouses. We are not able to provide timeliness of deliveries at this time based on specific product availability and carrier processes, but products will be shipped as soon as possible in the order it was placed.	*

Table 7: Marketing Plan

Line Item	Question	Response *	
36	Describe your marketing strategy for promoting this contract opportunity. Upload representative samples of your marketing materials (if applicable) in the document upload section of your response.	Co-op contracts are vital components of Stryker Emergency Care's marketing and sales strategy. The Sourcewell contract will be promoted internally with flyers, a road map, links to our internal marketing database, and education calls with our outside sales team of over 200 representative. For external marketing efforts, we keep a large library of product resources online for customers to easily access: www.stryker.com/us/en/emergency-care/product-resources.html Additionally, we share a library of videos featuring product in-service instructions, best practice tips, survivor stores, and more all available online: www.stryker.com/us/en/emergency-care/news and www.youtube.com/@StrykerEMS1 Please download this file to see a sample of our marketing collateral: https://we.tl/t-4vJsEZkENy	*
37	Describe your use of technology and digital data (e.g., social media, metadata usage) to enhance marketing effectiveness.	Stryker uses a host of digital marketing efforts to promote our mission of Together, we save lives. We are active on Facebook, LinkedIn and Twitter and use these platforms to connect with our customers and share valuable information regarding our product and educational offerings. We actively optimize our web properties through SEO monitoring and metadata/alt tag updates to provide the most up-to-date information as well as increase our visibility in online searches on both Google and Bing. We also work on improving our website CX to bring the best web experience possible to our customers and prospects. Our digital advertising focuses on connecting our prospective customers with sales reps in an efficient manner that drives quick and meaningful connections to build long lasting relationships built on trust and performance.	*
38	In your view, what is Sourcewell's role in promoting contracts arising out of this RFP? How will you integrate a Sourcewell-awarded contract into your sales process?	Stryker will expect Sourcewell to promote the value and benefits of co-op contracting and what differentiates Sourcewell from other contracting entities in the EMS market. More specifically, we would like for Sourcewell to make members aware of the new contract, what products/services are available, and provide the information about the awardees. Stryker will leverage the contract actively with the appropriate market segment customers through our dedicated team of field represantives that solely serve the EMS, Fire, Ambulance and Education markets. We will also promote the contract internally with active efforts from the Stryker marketing team. We are always open do joint promotions and other marketing efforts.	*
39	Are your products or services available through an e-procurement ordering process? If so, describe your e-procurement system and how governmental and educational customers have used it.	1. Purchasing agents – Must be approved & registered as user. 2. Documentation – Order confirmation and order status change confirmation 3. History – Order details, purchasing details, shipping status. 4. Pricing – customer contract pricing loaded for all eligible items, list price vs contract pricing views. 5. Payment options – Purchase orders, credit cards (Visa, MC, Amex). 6. Subscription re-ordering 7. Favorites list. 9. Returns – Form to initiate returns. 10. Support – Telephone & email available. 11. Notifications – Email notifications when out of stock items are back in stock. 12. Security – Meets PCI Data security standards. Please visit our store at https://stryker-corporation-emergency-care.mybigcommerce.com/. Preview code: f6lxvznnsf is needed to access the website. Government customers often use these web sources to purchase products: GSA eBuy and ECAT (Electronic Catalog).	*

Table 8: Value-Added Attributes

Line Item	Question	Response *	
40	Describe any product, equipment, maintenance, or operator training programs that you offer to Sourcewell participating entities. Include details, such as whether training is standard or optional, who provides training, and any costs that apply.	As one of the world's leading medical technology companies, we are driven to make healthcare better by creating innovative products and services that improve patient outcomes. To deliver the full potential of these innovations, customers must be trained on their safe and effective use. We support care team member learning in many parts of the world through a full range of virtual trainings on our MedEd portal, including trainings delivered in virtual reality. Please visit https://www.stryker.com/us/en/training-and-education/medical-and-surgical-equipment--/emergency-care/emergency-care.html#upcoming-events for a comprehensive selections of webinars, online courses and others resources. In addition, training is included with equipment purchase. With over 291 Emergency Care account managers, 310 field service representatives, 15 field clinical specialists, we ensure every customer has access to personalized, hands-on training across the communities we serve.	*
41	Describe any technological advances that your proposed products or services offer.	Stryker Emergency Care pioneered external defibrillation over 68 years ago and today continues to be the world market leader. LIFEPAK 15, the only monitor on market with ability to deliver over 200J Energyseries, offers 360J Biphasic Energy (Stryker Exclusive)	*
42	Describe any "green" initiatives that relate to your company or to your products or services, and include a list of the certifying agency for each.	We are committed to reducing our environmental impact on the world through responsible, sustainable operations. In 2022, we reduced carbon emissions by 20 percent for all Stryker facilities compared to a 2019 baseline. We have made a commitment to becoming carbon neutral for all Stryker facilities by 2030 and powering 100 percent renewable electricity by 2027. The local Stryker Environmental Alliance chapters identify environmental opportunities at each site. Stryker is also proactively working to reduce both what we use and what we leave behind. We're tracking our progress and installing global reporting systems, setting goals for manufacturing and looking at our use of resources across the business. We're also partnering with our customers to reduce what is left behind in landfill waste and grow resources that will help the planet, like national forests. Stryker has also made a committment to be Carbon neutral for all facilities by 2030 - https://www.stryker.com/content/m/c/2020-comprehensive-annual-report/performance-and-governance/corporate-responsibility-strategy.html	*
43	Identify any third-party issued eco-labels, ratings or certifications that your company has received for the equipment or products included in your Proposal related to energy efficiency or conservation, life-cycle design (cradle-to-cradle), or other green/sustainability factors.	Stryker is committed to achieving excellence as an environmental steward by conserving natural resources, promoting energy efficiency and eliminating waste. Our goal is to divert the highest possible amount of materials from the landfill through recycling. We strive to meet or exceed all relevant laws, regulations and other environmental legislation which are applicable to our business like e-waste and universal waste. Physio-Control strives to address chemicals of concern, and is RoHS, WEEE and battery directive compliant and conducts bio-compatibility testing on targeted materials. For additional information, please refer to: Corporate Responsibility: https://www.stryker.com/us/en/about/corporate-responsibility.html Stryker Recycling: https://www.strykeremergencycare.com/recycling/	*

44	Describe any Women or Minority Business Entity (WMBE), Small Business Entity (SBE), or veteran owned business certifications that your company or hub partners have obtained. Upload documentation of certification (as applicable) in the document upload section of your response.	Stryker Corporation does not hold any of the referenced certifications but we are committed to partnering with and providing opportunities for suppliers that do (http://www.stryker.com/en-us/corporate/AboutUs/SupplierDiversity/index.htm). Stryker is increasing the representation of disability-, LGBTQ-, minority-, veteran and women-owned businesses and small businesses in our supply chain and we engage suppliers that reflect the diversity of our customers and their patients, our employees and our communities. We are continually working to promote and facilitate diverse supplier engagement as a component of our overall corporate responsibility efforts. In 2022, Stryker's North American spend was over $300M with diverse-owned businesses and over $890M with small businesses. Examples include: Disability Owned Business Enterprise (DOBE), Lesbian, Gay, Bisexual, Transgender Owned Business Enterprise (LGBTBE), Minority Owned Business Enterprise (MBE), Veteran Owned Business Enterprise (VBE), Woman Owned Business Enterprise (WBE), Small Business Enterprise (SBE), Historically Underutilized Business (HUBZone), Service-disabled Veteran Owned Small Business (SDVOSB), Small Disadvantaged Business (SDB), Veteran Owned Small Business (VOSB), and Woman Owned Small Business (WOSB). Stryker Supplier Diversity We are also committed to serving our communities and creating a healthy, diverse, equitable and inclusive workplace where employees thrive. Stryker has several employee resource groups (ERG) that promote a culture of inclusion and belonging by amplifying our diversity, equity, and inclusion initiatives – with a focus on supporting and enhancing career development and providing education in the work environment. Examples include: • Stryker Women's Network (SWN): fostering an open and inclusive culture with a focus on attracting, developing, and retaining talented women • Women in Science and Engineering (WISE): accelerating growth of women in Stryker with technical expertise • Stryker's Allies for Equality (SAFE): championing LGBTA authenticity at work • Stryker's African Ancestry Network (SAAN): making Stryker a career destination for Black employees • Stryker's Emerging Professionals (SEP): engaging and inspiring the next generation • SOMOS Hispanic/Latinx network: celebrating diversity while advocating for the Hispanic/Latinx community • Stryker's Veterans Association (SVA): supporting, recruiting, developing, and retaining veteran employees while giving back to our military communities • Allies for All Abilities (3A): positively changing the lives of employees, families, and communities with visible and invisible disabilities • Asian Community Empowerment (ACE): promoting Asian cultural diversity and professional development Stryker Employee Resource Groups	*

45	What unique attributes does your company, your products, or your services offer to Sourcewell participating entities? What makes your proposed solutions unique in your industry as it applies to Sourcewell participating entities?	What can you expect from a partnership with Stryker: • Harness the power of a systems-based approach: One integrated system of equipment, devices and data empowers your teams to improve clinical care and enhances operational performance. • Depend on Stryker's technology: Drive better care with resuscitation technology like the LIFEPAK 15 monitor/defibrillator and the LUCAS 3 chest compression system integrated with Stryker's data solutions. With easy access to support and continuing education, rely on us as the innovative partner you trust most. • Overcome the challenges you face every day: From event scenes and long-distance patient transport to tight budgets and complex documentation, rely on a trusted system from Stryker to stay ready, respond effectively and review quickly for ongoing performance improvement. • Readiness: Handle your team's demands with insight into performance, readiness, systems and equipment, turning data into measurable improvement. • Response: Enable more effective care with an integrated system of equipment, CPR devices, monitor/defibrillators and data solutions that help improve your ability to handle time-dependent emergencies like cardiac arrest, STEMI, stroke or sepsis and other emergent care needs. • Review: Automatically access or share data, review performance, and identify improvements so your team can work more efficiently, stretch budgets and streamline billing. What you can expect from our products: • Power-PRO Ambulance Cot and Power-LOAD Fastener System: Stryker collaborates closely with customers to design and develop transport equipment to help reduce caregiver injury and increase patient care. Powered transport equipment can help with some of the common challenges facing EMS today including obesity, medic shortage and medic retention. Stryker offers a program that financially guarantees at least a 50% reduction in cot-related injuries pertaining to raishing, lowering, loading and unloading cots and 100% reduction in missed safety hooks while unloading cots with Stryker's powered cot and Power-LOAD powered cot fastener in full power operation. If not, Stryker will refund the price paid for the powered cots and Power-LOAD cot fastening systems. • LIFEPAK 15 Monitor/Defibrillator, LIFEPAK CR2, and LIFEPAK 1000 Defibrillator: Depend on durable, reliable, and easy-to-use LIFEPAK monitor/defibrillators. Provide high energy quickly (only monitor to deliver energy up to 360j to help difficult to defibrilate patients), monitor patient information such as EtC02, Sp02, SpMet and send data ahead to the receiving caregiving team to save time, ease handoffs and help drive improved patient outcomes. • LUCAS 3 Chest Compression System: Contribute to improved cardiac arrest outcomes with the LUCAS 3, v3.1 chest compression system. CPR quality, consistency and continuity matter. Provide Guidelines-compliant compressions — in most working conditions — while freeing responders to safely focus on assessment, care and transport. • McGRATH MAC Video Laryngoscope: Improve the view and gain better guidance for placement to reduce intubation difficulty. Enhance airway management with one durable, easy-to-use and cost-effective device. Maximize visualization of the airway with the McGRATH MAC video laryngoscope. • LIFENET System: Drive better care with the LIFENET System. Alert the receiving providers, share patient data and capture information to enhance team efficiency. • CODE-STAT Data Review Software and Service: Drive improved performance with data review software and services. Enhance quality and efficiency when you can easily access, share, analyze and review data from any LIFEPAK device. Customize documentation and gain advanced reporting for the insights you need to improve care, team performance and operational efficiency. • ProCare Services: When lives are at stake, you need someone who takes a proactive approach to keeping your equipment up and running. With ProCare, you can count on trusted field-based experts dedicated to caring for your equipment, so you can focus on what truly matters – saving lives. We're your ideal service partner and will provide you with OEM expertise as well as propriety diagnostics tools that help us fix equipment efficiently and effectively.	*

Table 9: Warranty

Describe in detail your manufacturer warranty program, including conditions and requirements to qualify, claims procedure, and overall structure. You may upload representative samples of your warranty materials (if applicable) in the document upload section of your response in addition to responding to the questions below.

Line Item	Question	Response *	
46	Do your warranties cover all products, parts, and labor?	Please refer to Stryker Limited Warranty for details.	*
47	Do your warranties impose usage restrictions or other limitations that adversely affect coverage?	Yes, if the product is modified or used in a way that is not part of the instructions for use, it may affect warranty coverage. Reference the Operations and Maintenance manuals for proper usage. Please visit this link to see a detailed warranty description of Stryker's Emergency Care products: https://techweb.stryker.com/Terms_Conditions/Warranty/Warranty_and_Compliance_Statement_Emergency_Care_2022.pdf	*
48	Do your warranties cover the expense of technicians' travel time and mileage to perform warranty repairs?	Yes.	*
49	Are there any geographic regions of the United States or Canada (as applicable) for which you cannot provide a certified technician to perform warranty repairs? How will Sourcewell participating entities in these regions be provided service for warranty repair?	No for US. This submittal reflects U.S. proposal and applies to US participating entities only. Products, services and T&Cs outside the U.S. may vary by country. Please refer to Proposal submitted by Stryker Canada team for information.	*
50	Will you cover warranty service for items made by other manufacturers that are part of your proposal, or are these warranties issues typically passed on to the original equipment manufacturer?	Stryker is the original equipment manufacturer and will be the only factory authorized service provider with access to proprietary software necessary to perform proper maintenance and repairs. No items made by other manufacturers will be offered in this proposal.	*
51	What are your proposed exchange and return programs and policies?	If Customer desires to return a purchased product, Customer must call its local Stryker representative or the Stryker regional sales office for information on credit or replacement of any purchased and non-expired product. A Returned Material Authorization (RMA) number will be provided and must be clearly identified on the carton of any returned product. Customer must return the product to Stryker in its original packaging, unopened, and undamaged, except for product that was received in a damaged condition or as otherwise authorized by Stryker, which product may be returned in its existing condition. Stryker will not accept the return of a non-defective and conforming product if Customer breaks the security seal on the product. Stryker will provide an RMA and accept the return of any product under any of the following circumstances: a) Stryker shipped the product in error; b) Customer received the product after the product's expiration date; c) Customer received the product in a damaged condition; d) The product is recalled and must be removed from the market; or e) Stryker specifically authorizes the return of the product (a 15% restocking fee may apply). Product must be returned within 30 working days from the date the Customer receives the product or within 30 working days from the date the Customer receives notice of recall, if applicable. Upon receipt of a properly returned product, Stryker will apply a full credit to Customer's account or provide replacement. Customer is advised that product returned without an RMA number, or not otherwise authorized, will not be accepted and will be returned to Customer at Customer's expense.	*
52	Describe any service contract options for the items included in your proposal.	Service contracts will be available for all equipment included with this bid. Service contracts include: 2-hour call back time, 24-72 hour repair turnaround, a Stryker-trained service specialist, Service parts, labor, and travel, Preventive maintenance, Proper PM documentation for Joint Commission, DNV, CMS, Dedicated service representative. (Service flyer included with bid proposal)	*

Table 10: Payment Terms and Financing Options

Line Item	Question	Response *	
53	Describe your payment terms and accepted payment methods.	All invoices issued under this Agreement are to be paid within thirty (30) days of the date of the invoice.	*
54	Describe any leasing or financing options available for use by educational or governmental entities.	Through Stryker's Flex Financial business, we provide a range of smart alternatives designed to fit your organization's needs. We offer flexibility beyond a cash purchase - enabling you to acquire our full portfolio of products. Ask your Sales Representatives for assistance in finding the financial solution that best fits your needs.	*
55	Describe any standard transaction documents that you propose to use in connection with an awarded contract (order forms, terms and conditions, service level agreements, etc.). Upload a sample of each (as applicable) in the document upload section of your response.	Samples of Work orders have been uploaded to the required section.	*
56	Do you accept the P-card procurement and payment process? If so, is there any additional cost to Sourcewell participating entities for using this process?	ACH is our preferred payment method.	*

Table 11: Pricing and Delivery

Provide detailed pricing information in the questions that follow below. Keep in mind that reasonable price and product adjustments can be made during the term of an awarded Contract as described in the RFP, the template Contract, and the Sourcewell Price and Product Change Request Form.

Line Item	Question	Response *	
57	Describe your pricing model (e.g., line-item discounts or product-category discounts). Provide detailed pricing data (including standard or list pricing and the Sourcewell discounted price) on all of the items that you want Sourcewell to consider as part of your RFP response. If applicable, provide a SKU for each item in your proposal. Upload your pricing materials (if applicable) in the document upload section of your response.	List price is established by three primary inputs: - Cost of goods/manufacture - Customer's willingness to pay - Competitive/market pressure Standard/list pricing and the Sourcewell discounted price are included in the pdf proposal and uploaded as a separate attachment in the pricing Section as required.	*
58	Quantify the pricing discount represented by the pricing proposal in this response. For example, if the pricing in your response represents a percentage discount from MSRP or list, state the percentage or percentage range.	Pricing is based on the category of the products, ranging from 10% to 40% discount. Please refer to the pdf proposal or separate pricelist for details.	*
59	Describe any quantity or volume discounts or rebate programs that you offer.	No special discounts or rebate programs will be offered. Products or services will be sold at the discount level as advised in the pdf price list.	*
60	Propose a method of facilitating “sourced” products or related services, which may be referred to as “open market” items or “nonstandard options”. For example, you may supply such items “at cost” or “at cost plus a percentage,” or you may supply a quote for each such request.	All products or services are quoted in the pdf price list. If the required item is not available in the pricelist, the participating entity can contact local Sales Account Manager through https://www.stryker.com/us/en/emergency-care/contact.html for advice.	*
61	Identify any element of the total cost of acquisition that is NOT included in the pricing submitted with your response. This includes all additional charges associated with a purchase that are not directly identified as freight or shipping charges. For example, list costs for items like pre-delivery inspection, installation, set up, mandatory training, or initial inspection. Identify any parties that impose such costs and their relationship to the Proposer.	Freight will be prepaid and added to the invoice. Sales tax applies if applicable. No additional charges for pre-delivery inspection, installation, set up, mandatory training, or initial inspection.	*
62	If freight, delivery, or shipping is an additional cost to the Sourcewell participating entity, describe in detail the complete freight, shipping, and delivery program.	Shipping charges depend on the method of shipping customer chooses and the total dollar amount of the order. Freight value will be advised at check out, prepaid and added to the invoice.	*
63	Specifically describe freight, shipping, and delivery terms or programs available for Alaska, Hawaii, Canada, or any offshore delivery.	As there is no local Hawaii or Alaska stock available for these Stryker items, these items will be shipped from our mainland warehouses. We are not able to provide timeliness of deliveries at this time based on specific product availability and carrier processes, but products will be shipped as soon as possible in the order it was placed. This submittal reflects U.S. proposal and applies to US participating entities only. Products, services and T&Cs outside the U.S. may vary by country. Please refer to Proposal submitted by Stryker Canada team for freight, shipping and delivery terms	*
64	Describe any unique distribution and/or delivery methods or options offered in your proposal.	All equipment and accessories will be sold directly through Stryker and shipped through 3rd party carriers. No special distribution channel will be used.	*

Table 12: Pricing Offered

Line Item	The Pricing Offered in this Proposal is: *	Comments
65	b. the same as the Proposer typically offers to GPOs, cooperative procurement organizations, or state purchasing departments.	Stryker is aware that the pricing proposed here may vary from other publicly available pricing. We hope there is understanding in the marketplace that with the current and unprecedented economic environment, Stryker has had to make pricing adjustments. The pricing posed here is not a growing profit center for Stryker but is based on global economic changes, inflation, and dramatic increases in transportation, materials, and labor costs. Pricelists publicly available are likely under review and negotiated under different circumstances.

Table 13: Audit and Administrative Fee

Line Item	Question	Response *	
66	Specifically describe any self-audit process or program that you plan to employ to verify compliance with your proposed Contract with Sourcewell. This process includes ensuring that Sourcewell participating entities obtain the proper pricing, that the Vendor reports all sales under the Contract each quarter, and that the Vendor remits the proper administrative fee to Sourcewell. Provide sufficient detail to support your ability to report quarterly sales to Sourcewell as described in the Contract template.	Stryker employs a contract coordinator position tasked with post-award management of contract requirements, including sales reporting and sales administration fees.	*
67	If you are awarded a contract, provide a few examples of internal metrics that will be tracked to measure whether you are having success with the contract.	Stryker will utilize annual revenue generated by this contract and view success as consistent year over year growth.	*
68	Identify a proposed administrative fee that you will pay to Sourcewell for facilitating, managing, and promoting the Sourcewell Contract in the event that you are awarded a Contract. This fee is typically calculated as a percentage of Vendor's sales under the Contract or as a per-unit fee; it is not a line-item addition to the Member's cost of goods. (See the RFP and template Contract for additional details.)	1%	*

Table 14A: Depth and Breadth of Offered Equipment Products and Services

Line Item	Question	Response *	
69	Provide a detailed description of the equipment, products, and services that you are offering in your proposal.	Please refer to the proposal that is uploaded to the portal.	*
70	Within this RFP category there may be subcategories of solutions. List subcategory titles that best describe your products and services.	All prducts and services is included in the proposal.	*

Table 14B: Depth and Breadth of Offered Equipment Products and Services

Indicate below if the listed types or classes of equipment, products, and services are offered within your proposal. Provide additional

comments in the text box provided, as necessary.

Line Item	Category or Type	Offered *	Comments	
71	Cardiac monitors, defibrillators	(•) Yes ( ) No	LIFEPAK 15	*
72	Automated External Defibrillator (AED) used by emergency responders	(•) Yes ( ) No	LIFEPAK CR2, LIFEPAK 1000 HearSine	*
73	CPR Assist Devices	(•) Yes ( ) No	LUCAS 3	*
74	Patient movement devices and systems	(•) Yes ( ) No	Stryker transport products	
75	Critical Care assist equipment such as IV pumps, ventilation equipment	( ) Yes (•) No		
76	Portable equipment including suction units, vital monitoring equipment including but not limited to pulse oximetry, pulse, blood pressure and carbon monoxide levels	( ) Yes (•) No		
77	Bags and other transportation devices to carry equipment and supplies for patient and provider care and protection	( ) Yes (•) No		
78	Immobilization equipment such as backboard, KED boards, spider straps, head and neck immobilization	( ) Yes (•) No		
79	Emergency medical supplies as they are related to Critical Care and EMS Equipment	(•) Yes ( ) No	Yes	*

80	Services and accessories complementary to the above offerings 71 – 79 including training, installation, testing, maintenance, and warranty programs	(•) Yes ( ) No	Stryker offers an e-procurement website where customers may directly purchase accessories and disposables. To order 24/7 at our store at https://shop.stryker.com/. All training is included for all purchased equipment. We recommend that all personnel attend training on the equipment to understand the full benefits and features of the equipment. Please visit https://www.stryker.com/us/en/training-and-education/medical-and-surgical-equipment--/emergency-care/emergency-care.html#upcoming-events for a comprehensive selections of webinars, online courses and others resources, or contact your Account Manager for specific needs. Each sold equipment includes installation guide. Call Stryker service at 1-800-327-0770 if you need help after installation. Stryker offers Limited Warranty at no charge as stated in Section 4 of the pdf. proposal. Additional year of coverage provided via ProCare Service is optional and the cost is included in this quote. Packages are available for all emergency equipment including cots, chairs, fasteners, chest compression systems, defibrillators and monitors. Contact your account manager or visit stryker.com/procare to learn more about our comprehensive service plans.	*

Exceptions to Terms, Conditions, or Specifications Form

Only those Proposer Exceptions to Terms, Conditions, or Specifications that have been accepted by Sourcewell have been incorporated into the contract text.

Documents

Ensure your submission document(s) conforms to the following:

1. Documents in PDF format are preferred. Documents in Word, Excel, or compatible formats may also be provided.

2. Documents should NOT have a security password, as Sourcewell may not be able to open the file. It is your sole responsibility to ensure that the uploaded document(s) are not either defective, corrupted or blank and that the documents can be opened and viewed by Sourcewell.

3. Sourcewell may reject any response where any document(s) cannot be opened and viewed by Sourcewell.

4. If you need to upload more than one (1) document for a single item, you should combine the documents into one zipped file. If the zipped file contains more than one (1) document, ensure each document is named, in relation to the submission format item responding to. For example, if responding to the Marketing Plan category save the document as "Marketing Plan."

- Pricing - Stryker Sourcewell Price File FINAL.pdf - Friday April 14, 2023 13:37:10
- Financial Strength and Stability - 2023. 02 Stryker SEC Report.pdf - Wednesday April 05, 2023 00:06:58
- Marketing Plan/Samples - Samples of Marketing Materials (1).zip - Wednesday April 05, 2023 00:23:25
- WMBE/MBE/SBE or Related Certificates - stryker-2022-comprehensive-report.pdf - Tuesday April 11, 2023 20:00:40
- Warranty Information - 2023.02 Stryker Emergency Care Warranty.pdf - Tuesday March 21, 2023 16:02:35
- Standard Transaction Document Samples - Stryker Sample--Work Order Service Report_Redacted.pdf - Tuesday April 11, 2023 20:09:02
- Upload Additional Document - 2023. 04 Sourcewell EMS Equipment RFP Proposal _Stryker.pdf - Friday April 14, 2023 13:41:28

Addenda, Terms and Conditions

PROPOSER AFFIDAVIT AND ASSURANCE OF COMPLIANCE

I certify that I am the authorized representative of the Proposer submitting the foregoing Proposal with the legal authority to bind the Proposer to this Affidavit and Assurance of Compliance:

1. The Proposer is submitting this Proposal under its full and complete legal name, and the Proposer legally exists in good standing in the jurisdiction of its residence.

2. The Proposer warrants that the information provided in this Proposal is true, correct, and reliable for purposes of evaluation for contract award.

3. The Proposer, including any person assisting with the creation of this Proposal, has arrived at this Proposal independently and the Proposal has been created without colluding with any other person, company, or parties that have or will submit a proposal under this solicitation; and the Proposal has in all respects been created fairly without any fraud or dishonesty. The Proposer has not directly or indirectly entered into any agreement or arrangement with any person or business in an effort to influence any part of this solicitation or operations of a resulting contract; and the Proposer has not taken any action in restraint of free trade or competitiveness in connection with this solicitation. Additionally, if Proposer has worked with a consultant on the Proposal, the consultant (an individual or a company) has not assisted any other entity that has submitted or will submit a proposal for this solicitation.

4. To the best of its knowledge and belief, and except as otherwise disclosed in the Proposal, there are no relevant facts or circumstances which could give rise to an organizational conflict of interest. An organizational conflict of interest exists when a vendor has an unfair competitive advantage or the vendor's objectivity in performing the contract is, or might be, impaired.

5. The contents of the Proposal have not been communicated by the Proposer or its employees or agents to any person not an employee or legally authorized agent of the Proposer and will not be communicated to any such persons prior to Due Date of this solicitation.

6. If awarded a contract, the Proposer will provide to Sourcewell Participating Entities the equipment, products, and services in accordance with the terms, conditions, and scope of a resulting contract.

7. The Proposer possesses, or will possess before delivering any equipment, products, or services, all applicable licenses or certifications necessary to deliver such equipment, products, or services under any resulting contract.

8. The Proposer agrees to deliver equipment, products, and services through valid contracts, purchase orders, or means that are acceptable to Sourcewell Members. Unless otherwise agreed to, the Proposer must provide only new and first-quality products and related services to Sourcewell Members under an awarded Contract.

9. The Proposer will comply with all applicable provisions of federal, state, and local laws, regulations, rules, and orders.

10. The Proposer understands that Sourcewell will reject RFP proposals that are marked "confidential" (or "nonpublic," etc.), either substantially or in their entirety. Under Minnesota Statutes Section 13.591, subdivision 4, all proposals are considered nonpublic data until the evaluation is complete and a Contract is awarded. At that point, proposals become public data. Minnesota Statutes Section 13.37 permits only certain narrowly defined data to be considered a "trade secret," and thus nonpublic data under Minnesota's Data Practices Act.

11. Proposer its employees, agents, and subcontractors are not:
    1. Included on the "Specially Designated Nationals and Blocked Persons" list maintained by the Office of Foreign Assets Control of the United States Department of the Treasury found at: https://www.treasury.gov/ofac/downloads/sdnlist.pdf;

    2. Included on the government-wide exclusions lists in the United States System for Award Management found at: https://sam.gov/SAM/; or

    3. Presently debarred, suspended, proposed for debarment, declared ineligible, or voluntarily excluded from programs operated

by the State of Minnesota; the United States federal government or the Canadian government, as applicable; or any Participating Entity. Vendor certifies and warrants that neither it nor its principals have been convicted of a criminal offense related to the subject matter of this solicitation.

☑ By checking this box I acknowledge that I am bound by the terms of the Proposer's Affidavit, have the legal authority to submit this Proposal on behalf of the Proposer, and that this electronic acknowledgment has the same legal effect, validity, and enforceability as if I had hand signed the Proposal. This signature will not be denied such legal effect, validity, or enforceability solely because an electronic signature or electronic record was used in its formation. - Maggie Wang, Associate Manager, Bids & Proposals, Stryker Sales, LLC, through its Medical Division

The Proposer declares that there is an actual or potential Conflict of Interest relating to the preparation of its submission, and/or the Proposer foresees an actual or potential Conflict of Interest in performing the contractual obligations contemplated in the bid.

○ **Yes** ◉ **No**

The Bidder acknowledges and agrees that the addendum/addenda below form part of the Bid Document.

Check the box in the column "**I have reviewed this addendum"** below to acknowledge each of the addenda.

File Name	I have reviewed the below addendum and attachments (if applicable)	Pages
Addendum_9_RFP_041823_Critical_Care_EMS Tue April 11 2023 09:23 AM	☑	1
Addendum_8_RFP_041823_Critical_Care_EMS Wed April 5 2023 04:50 PM	☑	1
Addendum_7_RFP_041823_Critical_Care_EMS Tue April 4 2023 08:26 AM	☑	2
Addendum_6_RFP_041823_Critical_Care_EMS Wed March 29 2023 04:03 PM	☑	1
Addendum_5_RFP_041823_Critical_Care_EMS Thu March 23 2023 03:39 PM	☑	1
Addendum_4_RFP_041823_Critical_Care_EMS Wed March 22 2023 06:32 PM	☑	1
Addendum_3_RFP_041823_Critical_Care_EMS Thu March 9 2023 03:32 PM	☑	2
Addendum_2_RFP_041823_Critical_Care_EMS Tue March 7 2023 07:36 PM	☑	1
Addendum_1_RFP_041823_Critical_Care_EMS Fri March 3 2023 02:40 PM	☑	1

DocuSign Envelope ID: D4CA2ED8-19DE-4250-833C-377947083632

AMENDMENT #1
TO
CONTRACT # 041823-STY

THIS AMENDMENT is effective upon the date of the last signature below by and between **Sourcewell** and **Stryker Sales, LLC** (Supplier).

Sourcewell awarded a contract to Supplier to provide Critical Care and EMS Equipment to Sourcewell and its Participating Entities, effective September 15, 2023, through June 30, 2027 (Contract).

Supplier wishes to amend its response to Question 27 of the Proposal, now reserving the right to periodically approve certain Distributors (as described in Article 2.C.) on a case-by-case basis as needed from time to time.

Except as amended above, the Contract remains in full force and effect.

Sourcewell

DocuSigned by:
By: Jeremy Schwartz
C0FD2A139D06489...
Jeremy Schwartz, Director of Operations/CPO

Date: 12/23/2023 | 1:07 PM CST

Approved:

DocuSigned by:
By: Chad Coauette
48BAF71B0894454...
Chad Coauette, Executive Director/CEO

Date: 12/23/2023 | 8:38 PM CST

Stryker Sales, LLC

DocuSigned by:
By: Jennifer Collins
582450E9392F40D...
Jennifer Collins

Title: Manager, Strategic Pricing & Contracts

Date: 12/22/2023 | 2:19 PM CST

Docusign Envelope ID: A6AEE6DC-0F4A-438D-A9B7-45A598611E28

AMENDMENT #2
TO
CONTRACT # 041823-STY

THIS AMENDMENT is effective upon the date of the last signature below by and between **Sourcewell** and **Stryker Sales, LLC** (Supplier).

Sourcewell awarded a contract to Supplier to provide Critical Care and EMS Equipment to Sourcewell and its Participating Entities, effective September 15, 2023, through June 30, 2027 (Contract).

Supplier wishes to amend the Contract's Proposal to modify its discount structure.

NOW, THEREFORE, the parties amend the Contract as follows:

> Line item 58 in "Table 11: Pricing and Delivery" of the Proposal is deleted in its entirety and replaced with the following:
>
> "Pricing is based on the category of products, ranging from 8% to 40% discount. See the price list for details."

Except as amended by this Amendment, the Contract remains in full force and effect.

Sourcewell

By: Signed by: Jeremy Schwartz C0FD2A139D06489...

Jeremy Schwartz, Chief Procurement Officer

Date: 10/14/2024 | 2:16 PM CDT

Stryker Sales, LLC

By: DocuSigned by: Anne Mullally 6CE0778B706449D...

Anne Mullally, VP and General Manager

Date: 10/14/2024 | 11:10 AM PDT

EXHIBIT B
TO
COOPERATIVE CONTRACT PURCHASE ADDENDUM
CONTRACT NO. 2025252

[Fee Schedule]

See following page(s).

Stryker #041823-STY

Pricing for contract #041823-STY is provided at a discount range of 10% - 40% from retail price list to Sourcewell participating agencies. Discount range is largely dependent on product category.

CITY OF BUCKEYE
Regular Council Meeting
COUNCIL ACTION REPORT

MEETING DATE: 12/17/24	**AGENDA ITEM:** 4.AB. FD - Change Order #1 to Cooperative Purchase Contract Addendum (CCPA) (Contract No. 2025158) between the City of Buckeye and Municipal Emergency Services, Inc.
DATE PREPARED: 12/17/24	**DISTRICT NO.:**
STAFF LIAISON: Jake Rhoades, Fire Chief, jrhoades@buckeyeaz.gov, (623) 349-6700	
DEPARTMENT: Fire	**AGENDA ITEM TYPE:** Consent Agenda Items / New Business

ACTION/MOTION: (This language identifies the formal motion to be made by the Council)
Council to take action on Change Order No. 1 to the Cooperative Contract Purchase Addendum (CCPA) (No. 2025158) between the City of Buckeye and Municipal Emergency Services, Inc. for firefighting equipment; and authorize the City Manager to execute and deliver said Change Order on behalf of the City.

SUMMARY

PROJECT DESCRIPTION:
The Fire Department is requesting approval of Change Order No. 1 to Cooperative Purchase Contract Addendum (CCPA) No. 2025158 with Municipal Emergency Services, Inc. With exception of increasing the Not to Exceed amount from $225,000 to $725,000, all original terms and conditions of CCPA No. 2025158 remain the same. This increase will allow for budgeted purchases for FY-25 and firefighting equipment for new and replacement apparatus. The Public Works' Fleet Division may also use this contract for equipment on fire apparatus that falls under their budget.

Council is not approving any purchase; only approving the maximum dollar amount that can be spent through the life of the contract. By doing so at this time, the Fire Department will not need to return to Council and the contract will be in place to allow for Purchase Orders to be issued as soon as funds are available to expedite the purchase process and allow apparatus to be placed in-service as soon as possible.

FUTURE ACTION:
Allows for flexibility in procuring equipment and supplies in a timely and cost-effective manner to provide necessary public safety services without disruption.

FINANCIAL IMPACT STATEMENT:
This request aligns with the Department's Council approved budget and allows for the execution of funds as projected. The approved budget for FY-25 is $325,000. The additional $175,000 is for projected expenses in FY-26.

CURRENT FISCAL YEAR TOTAL COST:
FY2025 - $325,000
FY2026 - $175,000
Total - $500,000

BUDGETED:
Yes

FISCAL YEAR:
FY-25

FUND/DEPARTMENT:
10002140-541210, 10002144-521520, 10002144-521523, 10002144-522150, 10002144-522151, 10003173-541210

Items related to a project or facility location must include an attached vicinity map for Council Review.
ATTACHMENTS:
CCPA Contract No. 2025158.pdf

COOPERATIVE CONTRACT PURCHASE ADDENDUM (CCPA)
BETWEEN
THE CITY OF BUCKEYE
AND
MUNICIPAL EMERGENCY SERVICES INC.

Contract No. 2025158

CHANGE ORDER # 1

THIS CHANGE ORDER # 1 (this "Change Order") is entered into as of _____, 2024 between the City of Buckeye, an Arizona municipal corporation (the "City") and Municipal Emergency Services Inc., a Nevada Corporation (the "Contractor"). This Change Order modifies certain sections of Contract No. 2025158 (the "Contract"), with those sections not expressly modified remaining in full effect pursuant to their terms.

CONTRACT CHANGES:

1. Contract Price, is amended by increasing the not-to-exceed amount by $500,000.00 from $225,000.00 to 725,000.00.

RECITAL OF
CONTRACT TERM (END-DATE)
AND
CONTRACT PRICE:

The Contract term end date is governed by a cooperative purchase contract end-date

The original Contract Price was not-to-exceed (NTE) $225,000.00.

The amended Contract Price at the time of this Change Order was NTE $225,000.00.

The amended Contract Price after this Change Order is and shall be NTE $725,000.00.

For reference purposes, **Attachment "1"** attached hereto includes selected pages/portions of the Contract.

ADDITIONAL PROVISIONS:

Except as amended herein, all provisions of the Contract remain in full force and effect.

In the event of any conflict or discrepancy between the terms of this Change Order, the Contract, and any other contract documents, the documents shall govern in that order.

This Change Order may be canceled pursuant to the provisions of A.R.S. § 38-511.

To the extent applicable under A.R.S. § 35-394, Contractor certifies that it does not, and will not for the duration of the Contract, use the forced labor, any goods or services produced by the forced labor, or any contractors, subcontractors, or suppliers that use the forced labor or any goods or services produced by the forced labor of ethnic Uyghurs in the People's Republic of China.

IN WITNESS WHEREOF, the parties hereto have executed this Change Order as of the date first set forth above.

CITY:

THE CITY OF BUCKEYE,

an Arizona municipal corporation

_____

Dan Cotterman, City Manager

CONTRACTOR:

MUNICIPAL EMERGENCY SERVICES INC.,

a Nevada corporation

By: John Walker

Its: CFO

ATTEST:

_____

Lucinda Aja, City Clerk

RECOMMENDED:

William Kauppi

_____

William Kauppi, Chief Financial Officer

APPROVED AS TO FORM:

_____

K. Scott McCoy, City Attorney

Adobe Acrobat Sign Transaction Number: CBJCHBCAABAALBVy6Adkybo9tXi7llUkp1m4TEx977KT

Attachment "1"

Selected Pages/Portions of Contract

COOPERATIVE CONTRACT PURCHASE ADDENDUM (CCPA)
BETWEEN THE CITY OF BUCKEYE
AND
MUNICIPAL EMERGENCY SERVICES, INC

FIREFIGHTING EQUIPMENT AND RESCUE TOOLS WITH RELATED SUPPLIES AND ACCESSORIES
CONTRACT NO. 2025158

THIS COOPERATIVE CONTRACT PURCHASE ADDENDUM (this "Addendum") is entered into as of August 19, 2024, between the City of Buckeye, an Arizona municipal corporation (the "City"), and Municipal Emergency Services Inc., a Nevada Corporation (the "Contractor").

WHEREAS, after a competitive procurement process, which is documented in the Award attached hereto as **Exhibit A** and incorporated herein by reference, Sourcewell Contract entered into Contract No. 020124-MES, dated April 8, 2024 with the Contractor (such contract and subsequent amendments thereto here referred to as the "Sourcewell Contract"), which is attached hereto as **Exhibit A** and incorporated herein by reference; and

WHEREAS, the City is permitted by Section 24-3-16 of the City Procurement Code to make purchases via cooperative purchasing pursuant to a cooperative purchasing contract; and

WHEREAS, the Contractor has made a proposal to the City, which is attached hereto as **Exhibit B** and incorporated herein by reference (the "Contract"); and

WHEREAS, the City desires to accept the Proposal and enter into contract with the Contractor under the terms and conditions of the Sourcewell Contract, by issuing this Addendum to said contract.

THEREFORE, the City now enters into this Addendum with Contractor for the goods and services set forth in the Proposal. This Addendum incorporates the terms and conditions of the Sourcewell Contract, except to the extent superseded herein. All references in the Sourcewell Contract shall be read to refer to the City of Buckeye. This Addendum shall be effective as of the date set forth below for approval and remain in effect for the remainder of the Sourcewell Contract 020124-MES, unless such term is modified or extended pursuant to the terms of the Sourcewell Contract. Payments to the Contractor shall be calculated in accordance with the Fee Schedule, which is attached hereto as part of **Exhibit B**, in a total amount not to exceed $225,000.00.

FURTHER, this Addendum is subject to cancellation pursuant to ARS §38-511.

FURTHER, to the extent applicable, the Contractor and its subcontractors warrant compliance with all federal immigration laws and regulations that relate to their employees and their compliance with the E-verify requirements under A.R.S. § 23-214(A). The Contractor's or its subcontractors' failure to comply with such warranty shall be deemed a material breach of this Addendum and may result in the termination of this Addendum by the City. The City retains the

right to inspect the papers of the Contractor's or its subcontractors' employees who perform any work or services pursuant to this Addendum to ensure compliance with these warranties.

FURTHER, to the extent applicable, the Contractor warrants that it is not participating and will not participate in prohibited activity in contravention of A.R.S. § 35-393.01.

FURTHER, to the extent applicable under ARIZ. REV. STAT. § 35-394, Contractor certifies that it does not currently, and agrees for the duration of this Agreement that it will not use (i) the forced labor of ethnic Uyghurs in the Peoples Republic of China ("ethnic Uyghurs"), (ii) any goods or services produced by the forced labor of ethnic Uyghurs, or (iii) any Contractors, subcontractors, or suppliers that use the forced labor or any goods or services produced by the forced labor of ethnic Uyghurs. If Contractor becomes aware that it is not in compliance with this paragraph, Contractor shall notify the City of the noncompliance within five (5) business days of becoming aware of it. If Contractor fails to provide a written certification that Contractor has remedied the noncompliance within one hundred eighty (180) days after that, this Agreement shall terminate unless the termination date of this Agreement occurs before the end of the remedy period, in which case this Agreement terminates on the Agreement termination date.

FURTHER, the Parties agree that the Addendum and Exhibits thereto shall be governed by State of Arizona law and suits pertaining to the Addendum and Exhibits thereto may only be brought in courts located in Maricopa County, Arizona.

FURTHER, all modifications, including but not limited to service additions and deletions, will be made in writing and with the written agreement of both parties.

FURTHER, in the event of any inconsistency between this Addendum, Sourcewell Contract and **Exhibit B**, the documents shall govern in that order.

CLICKWRAP TERMS EXCLUDED, in the event the Consultant's terms of sale or service were provided to the City only upon "acceptance" of a "clickwrap" or "clickthrough" agreement, such terms of sale or service shall not be binding upon the City. No oral agreement, "clickwrap" or "clickthrough" agreement or other understanding shall in any way modify a City issued or approved contract or the terms of this Cooperative Contract Purchase Addendum (CCPA).

THEREFORE, the Parties have executed this Addendum as of the date first set forth above.

CITY

THE CITY OF BUCKEYE,
an Arizona Municipal corporation

Dan Cotterman, City Manager

CONTRACTOR

MUNICIPAL EMERGENCY SERVICES INC.,
a Nevada corporation

By: John Walker

Its: CFO

Adobe Acrobat Sign Transaction Number CBJCHBCAABAAOD_boh muvsUbXJCVFa12eY4tw7yJF_C

EXHIBIT A
TO
COOPERATIVE CONTRACT PURCHASE ADDENDUM
CONTRACT NO. 2025158

[Sourcewell Contract]

See following page(s).

DocuSign Envelope ID 44313D2D-736D-4081-A2CD-C3B9442DE7FF

Sourcewell

Solicitation Number: #020124

CONTRACT

This Contract is between Sourcewell, 202 12th Street Northeast, P.O. Box 219, Staples, MN 56479 (Sourcewell) and Municipal Emergency Services, Inc., 12 Turnberry Lane, 2nd Floor, Sandy Hook, CT 06482 (Supplier).

Sourcewell is a State of Minnesota local government unit and service cooperative created under the laws of the State of Minnesota (Minnesota Statutes Section 123A.21) that offers cooperative procurement solutions to government entities. Participation is open to eligible federal, state/province, and municipal governmental entities, higher education, K-12 education, nonprofit, tribal government, and other public entities located in the United States and Canada. Sourcewell issued a public solicitation for Firefighting Equipment and Rescue Tools with Related Supplies and Accessories from which Supplier was awarded a contract.

Supplier desires to contract with Sourcewell to provide equipment, products, or services to Sourcewell and the entities that access Sourcewell's cooperative purchasing contracts (Participating Entities).

1. TERM OF CONTRACT

A. EFFECTIVE DATE. This Contract is effective upon the date of the final signature below.

EXPIRATION DATE AND EXTENSION. This Contract expires April 4, 2028, unless it is cancelled sooner pursuant to Article 22. This Contract allows up to three additional one-year extensions upon the request of Sourcewell and written agreement by Supplier. Sourcewell retains the right to consider additional extensions beyond seven years as required under exceptional circumstances.

B. SURVIVAL OF TERMS. Notwithstanding any expiration or termination of this Contract, all payment obligations incurred prior to expiration or termination will survive, as will the following: Articles 11 through 14 survive the expiration or cancellation of this Contract. All other rights will cease upon expiration or termination of this Contract.

2. EQUIPMENT, PRODUCTS, OR SERVICES

CITY OF BUCKEYE
Regular Council Meeting
COUNCIL ACTION REPORT

MEETING DATE: 12/17/24	**AGENDA ITEM:** 4.AC. FD - Change Order #1 to Cooperative Purchase Contract Addendum (CCPA) Contract No. 2025225 between the City of Buckeye and Sea-Western, Inc.
DATE PREPARED: 12/17/24	**DISTRICT NO.:**
STAFF LIAISON: Jake Rhoades, Fire Chief, jrhoades@buckeyeaz.gov, (623) 349-6700	
DEPARTMENT: Fire	**AGENDA ITEM TYPE:** Consent Agenda Items / New Business

ACTION/MOTION: (This language identifies the formal motion to be made by the Council)
Council to take action on Change Order No. 1 to the Cooperative Contract Purchase Addendum (CCPA) No. 2025225 between the City of Buckeye and Sea-Western, Inc. for fire fighting equipment; and authorize the City Manager to execute and deliver said Change Order on behalf of the City.

SUMMARY

PROJECT DESCRIPTION:

The Fire Department is requesting approval of Change Order No. 1 to Cooperative Contract Purchase Ad Sea-Western, Inc. With exception of increasing the Not to Exceed amount from $225,000 to $800,000, al CCPA No. 2025225 remain the same. This increase will allow for budgeted purchases for FY-25 and equ apparatus. The Public Works' Fleet Division may also use this contract for equipment on fire apparatus th

Council is not approving any purchase; only approving the maximum dollar amount that can be spent thro doing so at this time, the Fire Department will not need to return to Council and the contract will be in plac be issued as soon as funds are available to expedite the purchase process and allow apparatus to be pla

BENEFITS:
Allows for flexibility in procuring equipment and supplies from a vendor that can provide the commodities in a timely and cost-effective manner within budgeted amount and without disruption to public safety services.

FINANCIAL IMPACT STATEMENT:
Allows for flexibility in procuring equipment and supplies in a timely and cost-effective manner to provide necessary public safety services without disruption. The approved budget for FY-25 is $300,000. The additional $500,000 is for projected expenses in FY-26.

CURRENT FISCAL YEAR TOTAL COST:
FY2025 - $ 75,000
FY2026 - $500,000

Total - $575,000

BUDGETED:
Yes

FISCAL YEAR:
FY-25

FUND/DEPARTMENT:
10002140-541210, 10002144-520518, 10002144-521520, 10002144-521523, 10002144-522150, 10002144-522151, 10003173-541210

Items related to a project or facility location must include an attached vicinity map for Council Review.
ATTACHMENTS:
Contract No. 2025225.pdf

COOPERATIVE CONTRACT PURCHASE ADDENDUM (CCPA)
BETWEEN
THE CITY OF BUCKEYE
AND
SEA-WESTERN INC
CONTRACT NO. 2025225

CHANGE ORDER # 1

THIS CHANGE ORDER # 1 (this "Change Order") is entered into as of_____between the City of Buckeye, an Arizona municipal corporation (the "City") and Sea-Western Inc., a Washington Corporation (the "Contractor"). This Change Order modifies certain sections of Contract No. 2025225 (the "Contract"), with those sections not expressly modified remaining in full effect pursuant to their terms.

CONTRACT CHANGES:

1. **Section/Article –** Contract Price, is amended by increasing the not-to-exceed amount by $575,000.00 from $225,000.00 to $800,000.00

RECITAL OF
CONTRACT TERM (END-DATE)
AND
CONTRACT PRICE:

The original Contract Price was not-to-exceed (NTE) $225,000.00.
The amended Contract Price after this Change Order is and shall be NTE $800,000.00.
The Contract term end date is governed by a cooperative purchase contract end-date
For reference purposes, Attachment "1" attached hereto includes selected pages/portions of the Contract.

ADDITIONAL PROVISIONS:

Except as amended herein, all provisions of the Contract remain in full force and effect.

In the event of any conflict or discrepancy between the terms of this Change Order, the Contract, and any other contract documents, the documents shall govern in that order.

This Change Order may be canceled pursuant to the provisions of A.R.S. § 38-511.

To the extent applicable under A.R.S. § 35-394, Contractor certifies that it does not, and will not for the duration of the Contract, use the forced labor, any goods or services produced by the forced labor, or any contractors, subcontractors, or suppliers that use the forced labor or any goods or services produced by the forced labor of ethnic Uyghurs in the People's Republic of China.

IN WITNESS WHEREOF, the parties hereto have executed this Change Order as of the date first set forth above.

CITY:

THE CITY OF BUCKEYE,
Arizona municipal corporation

Dan Cotterman, City Manager

CONTRACTOR:

SEA-WESTERN INC
a Washington Corporation

By: Troy M. Eng

Title: Director of Operations

ATTEST:

Lucinda Aja, City Clerk

RECOMMENDED:

William Kauppi

William Kauppi, Chief Financial Officer

APPROVED AS TO FORM:

K. Scott McCoy, City Attorney

Attachment "1"

Selected Pages/Portions of Contract

COOPERATIVE CONTRACT PURCHASE ADDENDUM (CCPA)
BETWEEN THE CITY OF BUCKEYE
AND
SEA-WESTERN INC

FIREFIGHTNG EQUIPMENT AND RESCUE TOOLS WITH RELATED SUPPLIES AND ACCESSORIES
CONTRACT NO. 2025225

THIS COOPERATIVE CONTRACT PURCHASE ADDENDUM (this "Addendum") is entered into as of September 24, 2024, between the City of Buckeye, an Arizona municipal corporation (the "City"), and Sea-Western Inc. a Washington corporation (the "Contractor").

WHEREAS, after a competitive procurement process, which is documented in the Award attached hereto as **Exhibit A** and incorporated herein by reference, Sourcewell Contract entered into Contract No. 020124-SEW, dated April 03, 2024 with the Contractor (such contract and subsequent amendments thereto here referred to as the "Sourcewell Contract"), which is attached hereto as **Exhibit A** and incorporated herein by reference; and

WHEREAS, the City is permitted by Section 24-3-16 of the City Procurement Code to make purchases via cooperative purchasing pursuant to a cooperative purchasing contract; and

WHEREAS, the Contractor has made a proposal to the City, which is attached hereto as **Exhibit B** and incorporated herein by reference (the "Contract"); and

WHEREAS, the City desires to accept the Proposal and enter into contract with the Contractor under the terms and conditions of the Sourcewell Contract, by issuing this Addendum to said contract.

THEREFORE, the City now enters into this Addendum with Contractor for the goods and services set forth in the Proposal. This Addendum incorporates the terms and conditions of the Sourcewell Contract, except to the extent superseded herein. All references in the Sourcewell Contract shall be read to refer to the City of Buckeye. This Addendum shall be effective as of the date set forth below for approval and remain in effect for the remainder of the Sourcewell Contract 020124-SEW, unless such term is modified or extended pursuant to the terms of the Sourcewell Contract. Payments to the Contractor shall be calculated in accordance with the Fee Schedule, which is attached hereto as part of **Exhibit B**, in a total amount not to exceed $225,000.00.

FURTHER, this Addendum is subject to cancellation pursuant to ARS §38-511.

FURTHER, to the extent applicable, the Contractor and its subcontractors warrant compliance with all federal immigration laws and regulations that relate to their employees and their compliance with the E-verify requirements under A.R.S. § 23-214(A). The Contractor's or its subcontractors' failure to comply with such warranty shall be deemed a material breach of this Addendum and may result in the termination of this Addendum by the City. The City retains the

right to inspect the papers of the Contractor's or its subcontractors' employees who perform any work or services pursuant to this Addendum to ensure compliance with these warranties.

FURTHER, to the extent applicable, the Contractor warrants that it is not participating and will not participate in prohibited activity in contravention of A.R.S. § 35-393.01.

FURTHER, to the extent applicable under ARIZ. REV. STAT. § 35-394, Contractor certifies that it does not currently, and agrees for the duration of this Agreement that it will not use (i) the forced labor of ethnic Uyghurs in the Peoples Republic of China ("ethnic Uyghurs"), (ii) any goods or services produced by the forced labor of ethnic Uyghurs, or (iii) any Contractors, subcontractors, or suppliers that use the forced labor or any goods or services produced by the forced labor of ethnic Uyghurs. If Contractor becomes aware that it is not in compliance with this paragraph, Contractor shall notify the City of the noncompliance within five (5) business days of becoming aware of it. If Contractor fails to provide a written certification that Contractor has remedied the noncompliance within one hundred eighty (180) days after that, this Agreement shall terminate unless the termination date of this Agreement occurs before the end of the remedy period, in which case this Agreement terminates on the Agreement termination date.

FURTHER, the Parties agree that the Addendum and Exhibits thereto shall be governed by State of Arizona law and suits pertaining to the Addendum and Exhibits thereto may only be brought in courts located in Maricopa County, Arizona.

FURTHER, all modifications, including but not limited to service additions and deletions, will be made in writing and with the written agreement of both parties.

FURTHER, in the event of any inconsistency between this Addendum, Sourcewell Contract and **Exhibit B**, the documents shall govern in that order.

CLICKWRAP TERMS EXCLUDED, in the event the Consultant's terms of sale or service were provided to the City only upon "acceptance" of a "clickwrap" or "clickthrough" agreement, such terms of sale or service shall not be binding upon the City. No oral agreement, "clickwrap" or "clickthrough" agreement or other understanding shall in any way modify a City issued or approved contract or the terms of this Cooperative Contract Purchase Addendum (CCPA).

THEREFORE, the Parties have executed this Addendum as of the date first set forth above.

CITY

THE CITY OF BUCKEYE,
an Arizona Municipal corporation

Dan Cotterman, City Manager

CONTRACTOR

SEA-WESTERN INC
a Washington corporation

By: _____

Title: Director of Operations

Adobe Acrobat Sign Transaction Number: CBJCHBCAABAAuzmcmf_DpDRshwViakpcY7CeDAMJTJVT

DocuSign Envelope ID: AFBF1B44-DC37-48E9-9B89-77FE3F1FD584

Solicitation Number: #020124

CONTRACT

This Contract is between Sourcewell, 202 12th Street Northeast, P.O. Box 219, Staples, MN 56479 (Sourcewell) and Sea-Western Inc., 12815 NE 124th St., Suite H, Kirkland, WA 98034 (Supplier).

Sourcewell is a State of Minnesota local government unit and service cooperative created under the laws of the State of Minnesota (Minnesota Statutes Section 123A.21) that offers cooperative procurement solutions to government entities. Participation is open to eligible federal, state/province, and municipal governmental entities, higher education, K-12 education, nonprofit, tribal government, and other public entities located in the United States and Canada. Sourcewell issued a public solicitation for Firefighting Equipment and Rescue Tools with Related Supplies and Accessories from which Supplier was awarded a contract.

Supplier desires to contract with Sourcewell to provide equipment, products, or services to Sourcewell and the entities that access Sourcewell's cooperative purchasing contracts (Participating Entities).

1. TERM OF CONTRACT

A. EFFECTIVE DATE. This Contract is effective upon the date of the final signature below.

EXPIRATION DATE AND EXTENSION. This Contract expires April 4, 2028, unless it is cancelled sooner pursuant to Article 22. This Contract allows up to three additional one-year extensions upon the request of Sourcewell and written agreement by Supplier. Sourcewell retains the right to consider additional extensions beyond seven years as required under exceptional circumstances.

B. SURVIVAL OF TERMS. Notwithstanding any expiration or termination of this Contract, all payment obligations incurred prior to expiration or termination will survive, as will the following: Articles 11 through 14 survive the expiration or cancellation of this Contract. All other rights will cease upon expiration or termination of this Contract.

2. EQUIPMENT, PRODUCTS, OR SERVICES

CITY OF BUCKEYE
Regular Council Meeting
COUNCIL ACTION REPORT

MEETING DATE: 12/17/24	**AGENDA ITEM:** 4.AD. CA - Franchise Agreement with Southwest Gas Corporation
DATE PREPARED: 12/17/24	**DISTRICT NO.:** ALL
STAFF LIAISON: K. Scott McCoy, City Attorney, smccoy@buckeyeaz.gov, (623) 349-6982	
DEPARTMENT: City Clerk	**AGENDA ITEM TYPE:** Consent Agenda Items / New Business

ACTION/MOTION: (This language identifies the formal motion to be made by the Council)
Council to take action to grant the Franchise Agreement between Southwest Gas Corporation, a California corporation, and the City of Buckeye, Arizona, in the form filed and published; to authorize the Mayor to execute and deliver the Franchise Agreement; and to authorize and direct the Mayor, City Manager, City Attorney, and City Clerk to take all steps necessary to carry out the purpose and intent of said Franchise Agreement.

SUMMARY

PROJECT DESCRIPTION:
Arizona Revised Statutes Section 9-502 provides in relevant part that "If a majority of the votes cast is in favor of granting the franchise, the governing body shall grant the franchise only in the form filed and published. A franchise shall not be granted for a longer term than twenty-five years." [emphasis added in italics]. Similarly, Arizona Revised Statutes Section 9-501 provides in relevant part that "A municipal corporation shall not grant a franchise for a public utility to be operated by the grantee unless authorized by a majority vote of the qualified voters of the municipal corporation . . .." [emphasis added in italics].

On February 20, 2024 Council adopted Resolution No. 01-24 ordering and calling a Primary Election to be held on July 30, 2024, which included the submission to the voters a question as to whether or not a Franchise shall be granted to Southwest Gas Corporation (SW Gas). At the July 30, 2024 Primary Election, a majority of qualified voters approved Proposition 481 related to the Southwest Gas Franchise Agreement (Agreement) with the City. Pursuant to the terms of the Agreement, SW Gas has the authority to serve customers within the municipality and to utilize the City's public right-of-way for gas utility purposes. Staff now recommends that Council grant the Agreement in the form filed and published, which ensures Buckeye consistently has access to reliable energy sources, including affordable and clean natural gas. The term of the Agreement is 25 years, with an effective date of October 4, 2025, and an expiration date of October 4, 2050. The Agreement has been approved and signed by SW Gas.

BENEFITS:
The Southwest Gas Franchise Agreement ensures that the City consistently has access to reliable energy sources, including affordable and clean natural gas.

FINANCIAL IMPACT STATEMENT:
Franchise Fee: Southwest Gas Corporation must pay to the City a franchise fee in a sum equal to two percent (2%) of the gross revenues from the sale and/or delivery of gas for all purposes to their customers within the corporate limits of the City. See Section 5 of the Southwest Gas Franchise Agreement.

Items related to a project or facility location must include an attached vicinity map for Council

Review.
ATTACHMENTS:
SW Gas Franchise Agreement_signed by SW Gas.pdf

FRANCHISE AGREEMENT
BETWEEN
SOUTHWEST GAS CORPORATION
AND
THE CITY OF BUCKEYE, ARIZONA

Section 1 – Grant of Franchise

Subject to the terms and conditions set forth herein, the City of Buckeye, Arizona ("**City**") hereby grants to Southwest Gas Corporation, a corporation organized and existing under and by virtue of the laws of the State of California (herein called "**Grantee**"), its successors and assigns, the right and privilege to construct, maintain and operate its gas system and gas system facilities, as defined herein, upon, over, along, across and under the present and future public rights-of-way of the City (the "**Franchise**" or "**Franchise Agreement"**)). These public rights-of-way include, but are not limited to, present and future public roads, public streets, alleys, ways, bridges, and highways within the City ("**Public Rights-of-Way**"). Grantee's gas system is for the purpose of supplying natural gas, renewable natural gas, hydrogen and/or artificial gas, including gas manufactured by any method whatsoever, and/or gas containing a mixture of natural gas, renewable natural gas, hydrogen and/or artificial gas (herein all types of gas will be collectively referred to as "**gas**") to City, its successors, the inhabitants thereof, and all individuals and entities, either within or beyond the limits thereof, for all purposes. Grantee's gas system includes a transmission and distribution system of gas mains, pipelines and conduits, together with all necessary or desirable appurtenances including, but not limited to pipes, laterals, service lines, pumps, manholes, meters, gauges, valves, traps, fences, vaults, regulators, regulator stations, appliances, attachments and related equipment, facilities, appurtenances and/or property for the purpose of supplying gas (individually, and collectively, "**Gas System Facilities**"). Grantee shall have the right to install, maintain, construct, operate, use, repair or replace any or all of its Gas System Facilities from time to time as may be necessary.

Section 2 – Term

The Effective Date of this Franchise shall be October 3, 2025. This Franchise shall continue and remain in full force and effect for a period of twenty-five (25) years from the Effective Date. Unless terminated earlier by written agreement of the parties, this Franchise will expire on October 3, 2050. Grantee will comply with all applicable federal, state, and local laws and ordinances, including those that may come into existence, in Grantee's exercise of its Franchise rights, to the extent not inconsistent with Grantee's rights and interests provided hereunder.

Section 3 – Construction

3.1 Grantee shall perform all construction under this Franchise in accordance with applicable City ordinances and permit requirements, federal and state laws and

regulations and established industry standards. Except for emergencies or exigent circumstances beyond Grantee's control or as otherwise approved by City, Grantee will comply with ordinances of the City regarding street cuts. Grantee will complete all construction within a reasonable time. Before Grantee makes any installations in the Public Rights-of-Way, Grantee shall apply for and obtain from City such permit or permits as are required by City to be issued for other similar construction or work in the Public Rights-of-Way. Notwithstanding the foregoing, Grantee shall have the right to undertake without delay such emergency activities necessary to provide for and maintain the reliability and safety of its Gas System Facilities. If such action is required, Grantee shall advise City of the work performed to maintain its system and apply for a permit as soon as is practicable. Notwithstanding the provisions of Section 5 herein, except for emergencies or exigent circumstances beyond Grantee's control, should Grantee commence work without first obtaining applicable permits, Grantee will be required to remit payment to the City in the sum equal to one hundred fifty percent (150%) of the applicable equivalent permit fee.

3.2 (a) Grantee will provide reasonable advanced notice to the City, businesses and residents prior to beginning scheduled construction activities adjacent to the businesses' and residents' property in compliance with the City's generally applicable City Code, regulations, and permit conditions for work in the Public Rights-of-Way.

(b) Grantee and City will meet at least once each calendar year to coordinate activities and projects authorized hereunder.

3.3 Construction of Grantee's Gas System Facilities relating to traffic control, backfilling, compaction and paving, as well as the location or relocation of Grantee's Gas System Facilities pursuant to this Franchise Agreement shall be subject to regulation by the applicable provisions of the City Code in place at the time of such construction. If a provision of the City Code is inconsistent with Title 49 of the Code of Federal Regulations or any other applicable federal or Arizona state law, rule, order, or regulation, then Grantee and City agree that Title 49 of the Code of Federal Regulations or the other applicable federal, or Arizona state law, rule, order or regulation shall govern. Pursuant to A.R.S. § 40-360.30 and any other applicable law, Grantee shall maintain installation records of the location of all its Gas System Facilities in the Public Rights-of-Way. Grantee's Gas System Facilities are defined as critical infrastructure by the federal government and as such, City agrees that records of the location or design of natural gas facilities are proprietary to Grantee and City shall not release nor make available any records to any outside party without the express, written permission of Grantee.

3.4 Grantee shall not install, construct, maintain or use its Gas System Facilities in a manner that damages or interferes with any existing facilities of another utility located in the Public Rights-of-Way. Grantee shall promptly repair any damage to a City underground utility caused by Grantee's Gas System Facilities.

3.5 Upon request, Grantee shall provide the City with, on an annual basis, its known proposed capital plan and reasonably foreseeable future corridor plans for all improvements in the City's planning area. Upon request, the City shall provide Grantee

with its proposed capital improvement plan on an annual basis.

3.6 If City undertakes, either directly or through a contractor, any construction project adjacent or contiguous to Grantee's Gas System Facilities, City at its discretion may notify Grantee of such construction project. If such notification is given, Grantee will take steps as are reasonably necessary to maintain safe conditions of the Gas Facilities System throughout the construction project, including but not limited to the temporary removal or barricading of Grantee's Gas System Facilities at City's cost.

3.7 City will make reasonable efforts to complete permit application reviews within 15 business days. In no event will any permit application reviews exceed a timeframe of 20 business days, unless otherwise agreed to between Grantee and City.

3.8 Grantee may request a permit review application be reviewed under a shorter review timeframe (an expedited review), without payment of additional costs or fees, under the following conditions:

A. Not more than one (1) time per month, or not more than ten (10) times per year; and,

B. The request for an expedited review must be made from the Grantee's Engineering Manager or Public Affairs Department to the City's Development Services Director or designee; and,

C. The City will make reasonable efforts to complete the first review within 10 business days, not counting the day of receipt, unless there are extenuating circumstances; and,

D. A plan that requires corrections by the Grantee shall be resubmitted for second review under the City's standard timeframe for plan review if Grantee has exhausted its monthly allocation of expedited reviews; and,

E. To be eligible for expedited review, a plan must be no more than 30 pages with City-standard font-sizing and scaling; and,

F. Any request for a full street closure must be submitted to the City for review and approval, on a case-by-case basis.

Section 4 – Restoration of Public Rights-of-Way

If, in the construction, maintenance or operation of its Gas System Facilities, Grantee damages or disturbs the surface or subsurface of any public road adjoining public property or the public improvement located thereon, then Grantee shall restore the surface or subsurface of the public road or public improvement thereon with due diligence within a reasonable, prompt time and to a reasonably similar condition as existed at the time of the damage or disturbance and consistent with required City-adopted construction standards in effect at that time. With respect to any such required repairs to City public improvements or public property (other than public roads and related infrastructure)

caused by Grantee's operations under this Franchise, Grantee shall have the option to either perform the repairs or to pay to City, upon demand, the reasonable cost of such repairs. Unless otherwise provided for herein, Grantee shall be responsible for the costs of the restoration. Nothing in this Franchise Agreement shall be construed as constituting a contractual obligation on the part of Grantee that assumes jurisdiction over, or an obligation to maintain, such public road, public property or public improvement thereon.

Section 5 – Franchise Fee

5.1 In consideration of the grant of this Franchise, Grantee must pay to City a franchise fee in a sum equal to two percent (2%) of the Gross Revenues (as defined below) from Grantee's sale and/or delivery of gas for all purposes to Grantee's customers within the corporate limits of City as shown by Grantee's most current billing records ("Franchise Fee"). Grantee's Gross Revenues are derived from the revenues collected by Grantee pursuant to Grantee's Commodity Charge and Basic Service Charge, as provided in the Grantee's Arizona Gas Tariff on file with the Arizona Corporation Commission, as may be amended from time to time. Except as otherwise provided herein, such payment shall be in lieu of all fees and charges otherwise payable or assessable with respect to Grantee's activities hereunder, including without limitation, any permitting and license fees for the construction, installation and/or maintenance of Grantee's Gas System Facilities hereunder, or for inspection thereof. Grantee's payments are due and payable to the City thirty (30) days after the end of the calendar quarter and deemed late if payment is not received by the City within thirty (30) days of the due date. For payments not made by the required time, Grantee must pay interest in the amount of 1.5% per month accrued and accruing on any unpaid amount due. The City may waive interest and penalties for reasonable cause or if casualty beyond Grantee's control renders Grantee unable to compute or estimate the liability from business records.

5.2 Should Grantee and City determine and agree that Grantee either over collected or under collected the required amount of Franchise Fees from its customers, Grantee will promptly correct the Franchise Fee collection to ensure that the required amount is collected, as is required to be remitted to the City hereunder.

5.3 If at any time during the term of this Franchise, Grantee is paying any municipality in the State of Arizona a Franchise Fee greater than two percent (2%) of Grantee's gross revenues from the sale and/or delivery of gas by Grantee in such municipality's corporate limits, then, after written request by the City, the percentage set forth in Section 5.1 will be increased to match the greater percentage amount Grantee is paying to such other municipality under a franchise agreement. If City requests Grantee to match such greater Franchise Fee, then City agrees that all of the terms, conditions and limitations applicable in the franchise agreement that has the greater Franchise Fee payment are applicable to this Franchise Agreement.

5.4 In addition to the foregoing Franchise fees, Grantee will pay charges, taxes and fees as described in Section 6 of this Franchise Agreement.

Section 6 — Additional Charges, Fees and Taxes

Grantee shall pay the following charges, taxes and fees as established in a code or ordinance properly adopted by the City and as otherwise provided in this Franchise Agreement:

A. General ad valorem property taxes; and,

B. Transaction privilege and use tax authorized by City ordinance and billed by Grantee from users and consumers of gas within the corporate limits of the City, without reduction or offset; and,

C. Other charges, taxes or fees levied upon businesses generally through the City, provided said charge, tax or fee is a flat fee per year and that the annual amount of such fee does not exceed the amount of similar fees paid by any other business operated within City.

Section 7 – Relocation of Facilities

7.1 The City reserves its prior right to use the Public Rights-of-Way and City property, including the surface areas, for all City governmental function projects funded with City funds (including government or grant sourced funds received by City). Grantee shall, upon written request by City, relocate, without expense to the City, any of Grantee's Gas System Facilities that are in Direct, Physical Conflict ("**Direct Conflict**") with City facilities that will be installed as part of a City governmental function project funded with City funds to such location as the City and Grantee agree. Direct Conflict means a separation or clearance of one foot (1') or less between Grantee's Gas System Facilities and a City governmental function project, and, further, such Direct Conflict cannot be reasonably avoided by the City.

7.2 Grantee shall, upon written request by City, relocate, any of Grantee's Gas System Facilities that are in Direct Conflict with City facilities that will be installed as part of a City governmental function project funded with non-City funds to such location as the City and Grantee agree. In the event the governmental function project is paid for totally or in part with non-City funds, then Grantee's costs of moving its Gas System Facilities that are in Direct Conflict shall be borne by the source of the non-City funds or the City in the same ratio as the non-City funds bear to the total project cost, subject to applicable law and any terms or restrictions imposed upon the City's expenditure of such non-City funds received from a government source.

7.3 City will bear the reasonable cost of relocating any of Grantee's Gas System Facilities (a) that are not in Direct Conflict with any City facilities that will be installed as part of a City governmental function project; or (b) the relocation of which is necessitated by the construction of improvements by or on behalf of City in furtherance of any project, other than a governmental function project funded with City funds.

7.4 If Grantee asserts any prior rights, Grantee must demonstrate to City's reasonable satisfaction how it maintains any prior rights in the subject location.

7.5 If Grantee is required to relocate any Gas System Facilities within one (1) year of construction or relocation of such facilities paid for by Grantee, the costs of relocation shall be borne by City.

7.6 If City requires Grantee to relocate Grantee's Gas System Facilities that are located in a private easement then the costs and expenditures associated with purchasing a new private easement and relocating Grantee's Gas System Facilities shall be paid by City.

7.7 If relocation of any Gas System Facilities is required or requested due to the actions or inactions of any party other than the City, the third party shall be responsible for the cost of such relocation and Grantee shall not be required to commence such work until such time that the third party compensates Grantee for the relocation costs in cash or other manner acceptable to Grantee.

7.8 The City and Grantee agree that City is not a party to disputes among permittees or other interested parties using the Public Rights-of-Way.

7.9 City will not require Grantee's Gas System Facilities to be relocated in an unreasonable or arbitrary manner, or to avoid its obligations under this Franchise. If City requires Grantee to relocate Grantee's Gas System Facilities to avoid conflict with the installation or relocation of other utility facilities, then the costs and expenditures associated with relocating Grantee's facilities shall be paid by the City.

7.10 Grantee's failure to relocate Grantee's Gas System Facilities after written notice and a reasonable opportunity to cure pursuant to Section 16.1 shall be deemed a material breach of this Franchise Agreement.

7.11 All underground abandoned lines of Grantee's Gas System Facilities shall continue to remain the property and responsibility of the Grantee, unless the Grantee specifically acknowledges otherwise to the City Engineer and such is accepted by the City. Grantee shall remove, at Grantee's sole cost, abandoned lines at the request of City when Grantee's Gas System facilities are in Direct Conflict with City facilities that will be installed as part of a City governmental-function project that is funded with City-funds. In the event a governmental-function project is paid for totally or in part with non-City funds, then the Grantee's costs of moving the underground abandoned lines that are in Direct Conflict shall be paid by the source of the non-City funds or the City in the same ratio as the non-City funds bear to the total project cost, subject to applicable law and any terms or restrictions imposed upon the City's expenditure of such non-City funds received from a government source. Grantee may contract with City contractor for such removal.

7.12 Prior to removal of any abandoned lines, Grantee must notify City of its intent to remove abandoned lines and offer possession and ownership of said lines to City. If City elects to accept the abandoned lines, City's acceptance shall be based solely upon City's own inspection, investigation and analysis, and such transfer shall be on an "AS IS",

"WHERE IS", basis, and without representation or warranty by Grantee. Upon such transfer, City shall assume, and Grantee shall be relieved of, any and all obligations or responsibilities with respect to the abandoned lines.

Section 8 – Indemnification; Insurance

8.1 Grantee's indemnification, duty to defend, save and hold harmless in Section 8.2 below only applies to Claims (as defined in Section 8.2 below) that arise as a result of the work performed under this Franchise Agreement. Further, nothing in this Agreement shall impede or otherwise limit a party's statutory rights under A.R.S. § 40-423 or A.R.S. § 12-820 *et. seq.*

8.2 Grantee agrees to indemnify, defend, save, and hold harmless, the City of Buckeye and its elected or appointed officials, agents, boards, commissions, employees and volunteers (hereinafter referred to as "**Indemnitee**") from and against any and all suits, claims, demands, actions, liabilities, damages, losses, or expenses of any nature or kind whatsoever, including court costs, attorneys' fees, and costs of claim processing, investigation, litigation (hereinafter collectively referred to as "**Claims**") for personal injury (including death) or property damage caused, or alleged to be caused in whole or in part, by the negligence or willful acts or omissions of Grantee or any of Grantee's directors, officers, agents, employees, or volunteers for work performed pursuant to this Franchise Agreement. This indemnity, for work performed pursuant to this Franchise Agreement, includes any claims or amount arising or recovered under the Worker's Compensation Laws or arising out of the failure of Grantee to conform to any federal, state or City law, statute, ordinance, rule, regulation or court decree. It is the specific intention of the Grantee and City that the Indemnitee will, in all instances, except for Claims arising from the negligent or willful acts or omissions of the Indemnitee, be indemnified by Grantee from and against any and all Claims for personal injury (including death) or property damage caused, or alleged to be caused in whole or in part, by the negligence or willful acts or omissions of Grantee or any of Grantee's directors, officers, agents, employees, or volunteers for work performed pursuant to this Franchise Agreement. It is agreed that Grantee will be responsible for primary loss, investigation, defense, and judgment costs where this indemnification is applicable, but shall reasonably coordinate with City on such investigation and defense. Nothing in this provision shall preclude Grantee from seeking contribution from any third party jointly responsible for such damages or Claims.

8.3 Grantee shall procure and maintain for the duration of this Franchise Agreement, insurance or self-insurance against claims for injuries to persons or damages to property which may arise or result from work performed under this Franchise. These insurance requirements are minimum requirements for this Franchise and in no way limit the indemnity covenants contained in this Franchise. The City in no way warrants that the minimum limits contained herein are sufficient to protect the Grantee from liabilities that might arise out of this Franchise for the Grantee.

8.4 Minimum Coverage Requirements. The Grantee shall provide coverage, in the form of insurance, self-insurance, or a combination thereof, which includes coverage for the work performed under this Franchise, including but not limited to,

products-completed operations, personal and advertising injury, and fire damage in an amount not less than Ten Million Dollars ($10,000,000.00). An excess liability or umbrella liability policy may be used to meet the minimum liability requirements provided that the coverage is written on a "following form" basis or such excess liability or umbrella liability policy provides coverage at least as broad as the primary policy.

8.5 Policy Provisions. The insurance policies furnished by Grantee are to contain, the following provisions: (i) The City of Buckeye shall be included as an additional insured (which may be accomplished by blanket additional insured coverage) with respect to liability arising out of the use and/or occupancy of the right of way subject to this Franchise and activities performed by or on behalf of the Grantee under this Franchise Agreement, including completed operations of the Grantee, and automobiles owned or operated by Grantee; (ii) commercial general liability insurance shall include bodily injury, property damage and broad form contractual liability coverage; (iii) the Grantee's insurance coverage shall be primary insurance and noncontributory with respect to all other available sources relating to work performed under this Franchise; (iv) the Grantee's insurance shall apply separately to each insured against whom claim is made or suit is brought, except with respect to the limits of the insurer's liability; (v) coverage provided by the Grantee may not be limited to the liability assumed under this Franchise Agreement.

8.6 Notice of Cancellation and Certificate of Insurance Required. Insurance is to be placed with insurers duly licensed, authorized, permitted or approved in the State of Arizona and with a "Best's" rating of not less than B+ VI. The City in no way warrants that the above required minimum insurer rating is sufficient to protect the Grantee from potential insurer insolvency.

8.7 Grantee shall furnish the City with letters of self-insured retention or certificates of insurance (ACORD form or equivalent approved by the City) as required by this Franchise Agreement. The certificates for each insurance policy are to be signed by a person authorized by the insurer to bind coverage on its behalf. Each insurance policy required by this Franchise Agreement must be in effect at or prior to the Effective Date and remain in effect for the duration of this Franchise. Failure to maintain the insurance policies required by this Franchise Agreement shall be considered a breach of this Franchise Agreement. All letters of self-insured retention or certificates of insurance required by this Franchise shall be sent directly to: City of Buckeye, 530 E. Monroe Ave., Buckeye AZ, 85326, Attn: Risk Manager, with a copy to City of Buckeye, 530 E. Monroe Ave., Buckeye AZ 86326, Attn: City Attorney. The City Franchise number and description shall be provided on the letter of self-insured retention or certificate of insurance.

Upon request by the City, the Grantee shall make its policies available for review at 1600 E. Northern Avenue, Phoenix, AZ 85020, at a mutually convenient time, and upon execution of a commercially reasonable non-disclosure and confidentiality agreement.

8.8 Any modification or variation from the insurance requirements in this Franchise must be mutually agreed to by City and Grantee. Such action will not require a formal amendment to this Franchise, but may be made by administrative action.

Section 9 [Reserved].

Section 10 – Consent to Assignment

This Franchise may be assigned by Grantee, its successors and assigns, in whole or in part, to any person certified by the Arizona Corporation Commission to assume the duties and obligations of Grantee hereunder.

Section 11 – Right to Purchase

City reserves the right to purchase by the power of eminent domain, Ariz. Rev. Stat. § 9-511, or as otherwise provided by law, the facilities of Grantee within the corporate limits of the City of Buckeye as may be amended from time to time, during the term of the Franchise and/or upon its expiration.

Section 12 – Franchise; Non-Exclusive

This Franchise Agreement is non-exclusive, and nothing contained herein shall be construed to prevent City from granting similar rights or privileges to any other person, firm or corporation.

Section 13 – Notices

Any notice required or permitted to be given hereunder shall be in writing, unless otherwise expressly permitted or required, and shall be deemed effective either (i) upon hand delivery to the person then holding the office shown on the attention line of the address below, or if such office is vacant or no longer exists, to a person holding a comparable office, or (ii) on the third business day following its deposit with the United States Postal Service, first class and certified or registered mail, return receipt requested, postage prepaid, addressed as follows:

To the City:
City Manager
City of Buckeye
530 E Monroe Avenue
Buckeye AZ 85326

With a copy to:
City Attorney
City of Buckeye
530 E Monroe Avenue
Buckeye AZ 85326

To Southwest Gas Corporation: Public Affairs Department
Southwest Gas Corporation
1600 E. Northern Avenue
Phoenix, Arizona 85020

With a copy to: Legal Affairs Department
Southwest Gas Corporation
8360 S. Durango Drive
Las Vegas, Nevada 89113

Section 14 – Voter Approval

This Franchise Agreement is subject to the approval of the qualified electors of the City. If Grantee's Franchise is the sole item on the City's ballot for the election, then Grantee must pay one hundred percent (100%) of the election costs. If Grantee's Franchise is not the sole item on the City's ballot for the election, then Grantee must pay fifty (50%) of the City's portion of the election costs. Grantee must pay one hundred percent (100%) of any statutorily-required publication costs and fifty percent (50%) of the publicity pamphlet associated with Grantee's Franchise.

Section 15 – Independent Provisions

Any term or condition deemed illegal or invalid shall not affect the validity of this Franchise Agreement as a whole or of any other term or condition hereof, other than the part so adjudged to be illegal or invalid.

Section 16 - Default; Dispute Resolution

16.1 Failure or unreasonable delay by either party to perform any term or provision of this Agreement for a period of fourteen (14) days after written notice thereof from the other party shall constitute a default under this Agreement. If the default is of a nature which is not capable of being cured within fourteen (14) days, the cure shall be commenced within such period, and diligently pursued to completion. The notice shall specify the nature of the alleged default and the manner in which the default may be satisfactorily cured. In the event of a default hereunder by any party, the non-defaulting party shall be entitled to all remedies at both law and in equity, including, without limitation, specific performance.

16.2 To further cooperation by the parties in implementing this Franchise, the City and Grantee each shall designate and appoint a representative to act as a liaison between the City and its various departments and Grantee. The initial representative for the City shall be the City Manager and the initial representative for Grantee shall be its Project Manager, as identified by Grantee from time to time. The parties' representatives shall be available at all reasonable times to discuss and review the performance of the parties under this Franchise.

16.3 If a dispute between the parties arising out of this Franchise cannot be resolved by the parties, City and Grantee agree to attempt resolution through private mediation in

Maricopa County before resorting to arbitration, litigation or some other dispute resolution procedure. In the event that the parties cannot agree upon the selection of a mediator within seven (7) days, either party may request the Presiding Judge of the Maricopa County Superior Court to assign a mediator from a list of mediators maintained by the Arizona Municipal Risk Retention Pool.

Section 17 – Audit Rights

17.1 During the duration of this Franchise Agreement, the City has the authority, at City's expense, to conduct an audit of Grantee's books and records to determine compliance of the calculation of Gross Revenue and the payment of the Franchise Fee. The audit shall be conducted in such a way as not to disrupt Grantee's business operations and will be performed in accordance with generally accepted auditing standards. All pertinent books and records relating to this Franchise Agreement are subject to the audit conducted by the City or its representatives. The City may determine the scope of each audit; however, the time period that may be audited shall not exceed thirty-six (36) months prior to the date the audit notice is received by the Grantee. An audit shall not be required more than once in a single 12-month period.

17.2 Grantee shall pay to the City within forty-five (45) days' written notice to Grantee any amounts that are due to the City as determined by an audit of Grantee's books and records as set forth in Section 17 herein. Reimbursement for underpayment as a result of audit findings shall be identified as late payments and are subject to late payment interest of 12% per year.

Section 18 – Miscellaneous Provisions

18.1 Counterparts. This Franchise Agreement may be executed in any number of counterparts; all such counterparts shall be deemed to constitute one and the same instrument, and each of said counterparts shall be deemed original hereof. Electronic signatures shall be effective to bind the Parties.

18.2 [Reserved].

18.3 Provisions Required by Law. Each and every provision of law and any clause required by law to be in this Franchise Agreement will be read and enforced as though it were included herein and, if through mistake or otherwise any such provision is not inserted, or is not correctly inserted, then upon the application of either Party, this Agreement will promptly be physically amended to make such insertion or correction.

18.4 Licensing and Registration. Grantee represents that it is authorized to do business in Arizona and, upon request, will provide proof thereof to the City.

18.5 Governing law. This Franchise Agreement shall be governed by the laws of the State of Arizona, and suit pertaining to either the Franchise Agreement or governing law

may be brought only in courts in Maricopa County, Arizona.

18.6 Time is of Material Importance. Time is of material importance to each and every provision of this Franchise Agreement.

We, the undersigned, Mayor and City Council of the City of Buckeye, Arizona, pass and adopt this Franchise Agreement this 20th day of February, 2024.

CITY OF BUCKEYE:

_____
Eric Orsborn, Mayor

_____
Date
ATTEST:

_____
Lucinda J. Aja, City Clerk

APPROVED AS TO FORM:

_____
K. Scott McCoy, City Attorney

GRANTEE:

SOUTHWEST GAS CORPORATION:

_____
Brad Harris, Regional Vice President,
Arizona

9-25-24
_____
Date

APPROVED AS TO FORM:

_____
Counsel for Southwest Gas Corporation

CITY OF BUCKEYE
Regular Council Meeting
COUNCIL ACTION REPORT

MEETING DATE: 12/17/24	**AGENDA ITEM:** 6.A. DS - PH - 305 East Baseline Road Rezone
DATE PREPARED: 12/17/24	**DISTRICT NO.:** Council District 1
STAFF LIAISON: Jarek Dunn, Planner I, jdunn@buckeyeaz.gov, (623) 204-3002	
DEPARTMENT: Development Services	**AGENDA ITEM TYPE:** Public Hearing and Non Consent - New Business Items

ACTION/MOTION: (This language identifies the formal motion to be made by the Council)
Council to hold a public hearing and take action on Ordinance No. 27-24 amending the Zoning Map of the City of Buckeye for approximately .07 acres located approximately at the southeast corner of Baseline Road and East 3rd Avenue from Special Use (SU) to Downtown Residential (DR).

SUMMARY

PROJECT DESCRIPTION:
The applicant and owner, Brian Gersten, is requesting approval of a rezone on approximately .07 acres from Special Use (SU) to Downtown Residential (DR) located approximately at the southeast corner of Baseline Road and East 3rd Avenue. Once rezoned, the intent is to develop the property with a residential duplex in accordance with the vision of the Historic Downtown Buckeye Activity Center and Downtown Buckeye Specific Area Plan. See attached staff report for more information on the project.

BENEFITS:
The subject rezone will allow the property to develop with a residential duplex that is not only compatible with the vision of the Downtown Buckeye Specific Area Plan but will also increase housing options for residents within Buckeye's Downtown.

FUTURE ACTION:
None

FINANCIAL IMPACT STATEMENT:
See Financial Impact Statement

FINANCIAL IMPACT STATEMENT:
Although a fiscal impact analysis has not been conducted on this specific project, all new development will have an ongoing fiscal impact on the city. The development is responsible for construction of all infrastructure necessary to serve the site and will generate one-time revenue for the city such as permit fees, construction sales tax and development impact fees. Longer term fiscal impacts include increased demands for municipal services, the costs of which may or may not be offset by increased property values/tax levies, city sales tax, state shared revenues and the increased demand for commercial and retail development. Any areas that will be maintained by the city are constructed by the developer and then conveyed to the city two years after construction.

Items related to a project or facility location must include an attached vicinity map for Council Review.
ATTACHMENTS:
PLZZ-24-0007 - 305 E Baseline Rd Rezone - Staff Report - CC20241217.docx
PLZZ-24-0007 Vicinity Map (Exhibit A).pdf
PLZZ-24-0007 Existing Zoning Map (Exhibit B).pdf
PLZZ-24-0007 Proposed Zoning Map (Exhibit C).pdf

PLZZ-24-0007 General Plan Map (Exhibit D).pdf
PLZZ-24-0007 Rezone Narrative (Exhibit E).pdf
PLZZ-24-0007 Citizen Participation Report (Exhibit F).pdf
PLZZ-24-0007 Legal Description and Exhibit (Exhbit G).pdf
Ordinance 27-24.exhibits.pdf
PLZZ-24-0007 - 305 E Baseline Rd Rezone - Presentation - CC20241217.pptx

BUCKEYE, AZ

REZONE

Report to the Mayor and City Council

CASE NUMBER:	PLZZ-24-0007
TITLE:	305 East Baseline Road – Rezoning to Downtown Residential
MEETING DATE:	December 17, 2024

Applicant:	Brian Gersten
Owner(s):	Brian Gersten
Request:	Rezone from Special Use (SU) to Downtown Residential (DR)
District:	No. 1
Location:	Southeast corner of Baseline Road and East 3rd Avenue
Site size:	Approximately .07 acres
Public input:	An advertised neighborhood meeting was held on June 21, 2024 and a second advertised neighborhood meeting was held on October 01, 2024. The meetings were attended by three nearby property owners; upon explanation of the proposal, the citizens appeared to have no outstanding concerns. No members of the public spoke during the Planning and Zoning Commission public hearing for this item on November 26, 2024. Planning and Zoning Commission recommended approval of the rezoning, subject to staff's recommended conditions.
Recommendation:	Conduct a Public Hearing and Adopt Ordinance No. 27-24, approving Case PLZZ-24-0007, subject to conditions a) through i)

PROJECT DESCRIPTION:

1. Brian Gersten is requesting to rezone approximately .07 acres, from Special Use (SU) to Downtown Residential (DR); the rezoning would allow for development of the property with a residential duplex.

AREA CONTEXT:

2. Table 1: Existing Land Use, General Plan Designation, and Zoning District:

	LAND USE	GENERAL PLAN	ZONING
Subject Property	Vacant Lot	Historic Downtown Buckeye Activity Center	Special Use (SU)
North	Single Family Residence	Historic Downtown Buckeye Activity Center	R-4 (Maricopa County Parcel)
East	Vacant Lot	Historic Downtown Buckeye Activity Center	Special Use (SU)
South	Single Family Residence	Historic Downtown Buckeye Activity Center	Special Use (SU)
West	Refuge Church	Historic Downtown Buckeye Activity Center	Special Use (SU)

PUBLIC PARTICIPATION SUMMARY:

3. A neighborhood meeting, providing an opportunity for interested parties to learn more about the request, was held on June 21, 2024, at 12:00 P.M. at Buckeye Public Library – Coyote Branch. As required by Buckeye Development Code, written notices to property owners within 300 feet of the subject site were mailed on May 17, 2024, over fifteen (15) days prior to the date of the meeting.

4. Three (3) residents attended the first neighborhood meeting. One attendee expressed concern regarding the feasibility of a septic system. This concern was addressed by explaining the septic system permitting process and the applicant ensured that he will be working with a septic engineer to address any potential sizing issues in the future. No additional comments were made by the resident regarding the rezone proposal. The remaining two (2) residents initially expressed a concern about the specific parcel undergoing rezoning but upon clarification, the applicant explained that the project

boundaries were limited to parcel 504-51-006 and did not include parcel 504-51-003, the parcel neighboring their property. No further comments or concerns were raised by the two residents.

5. A second neighborhood meeting, providing an opportunity for interested parties to learn more about the request, was held on October 1, 2024, at 6:00 P.M. on a Zoom Meeting. As required by Buckeye Development Code, written notices to property owners within 300 feet of the subject site were mailed on September 13, 2024, over fifteen (15) days prior to the date of the meeting.
6. Excluding the applicant and City staff, there were no attendees to the second neighborhood meeting.
7. Staff has not received any written support or opposition pertaining to this project.
8. No public spoke during the Planning and Zoning Commission public hearing for this item on November 26, 2024. Planning and Zoning Commission recommended approval of the rezoning, subject to staff's recommended conditions.
9. All required notifications of this public hearing were completed at least fifteen (15) days in advance of the meeting date, as follows:

Notification Element	Date
Published in the Arizona Republic	November 6, 2024
Site Posted	November 7, 2024
Mailing Notice to Property Owners Within 300 Feet of Site	November 7, 2024

BACKGROUND:

10. *October 1984:* The subject property was annexed as part of a larger annexation covering approximately 4 acres by City Council's adoption of Ordinance 11-84.
11. *August 1996*: City zoning maps show the property zoned as Special Use (SU) by City Council's adoption of Ordinance 6-96.
12. *November 26, 2024*: The Planning and Zoning Commission conducted a public hearing and recommended approval of the rezoning; no members of the public spoke during the item's public hearing.

ANALYSIS:

Conformance with the General Plan:

13. The General Plan land use designation of the property is Activity Center, specifically the Historic Downtown Buckeye Activity Center, now more commonly known as the Downtown Specific Area Plan (DSAP). Located South of Baseline Road and east of 3rd Avenue East, the Downtown Specific Area Plan designates this area of Downtown as Suburban Residential which is consistent with the proposed zoning request of this property to the Downtown Residential (DR) zoning district.
14. The Land Use Designation of Suburban Residential within the Downtown Specific Area Plan supports this rezoning for a residential duplex as it aligns with the goals of the Land use designation and Strategy DA-7.2 of the DSAP which states the Buckeye Development Code should provide opportunities for a mixture of detached, attached, and multi-family housing options in carrying densities to ensure it meets the needs of all downtown residents.
15. The rezoning furthers the following General Plan goals and policies:
    - Policy G-4.1 The City of Buckeye will encourage a diverse mix of uses appropriate to support an area, such as in Activity Center and Neighborhood areas to encourage residents to lead an active lifestyle.
    - Policy G-4.3 The City of Buckeye will promote infill development, where possible, in order to more effectively manage the resulting growth in infrastructure so as to minimize costs of operations and maintenance.
    - Policy G-20.1 Within established neighborhoods, the City of Buckeye should support new infill residential development that has the character, size, density, and quality that respects the existing neighborhood character and maintains the quality of life for existing and future residents.
    - Policy ST-12.3 The City of Buckeye should encourage infill development for the revitalization of neighborhoods, including Historic Downtown, especially where there is an excess of vacant lots, deteriorated or underutilized properties.

Land Use and Zoning:

16. The requested rezone of approximately .07 acres from Special Use (SU) to Downtown Residential (DR) meets the intent of the Development Code. The DR zoning district allows for development and redevelopment of properties within the Downtown Activity Center that are not located adjacent to the area's primary main streets, including many of Buckeye's older residential neighborhoods. The district allows for a variety of residential uses including single-family residential, duplexes, and multi-family residential, as well as a tailored list of compatible commercial and office uses.

17. The property's existing Special Use District zoning does not permit residential development, allowing only for a range of agricultural and specialized commercial uses. The Special Use zoning is not compatible with the vision for development of the area as outlined in the DSAP.

Future Development & Infrastructure:

18. The site is located within the City of Buckeye water service area but is not located within the City of Buckeye sewer area and will utilize a sceptic system. The developer will be responsible for completing all water and sewer infrastructure improvements needed to serve the proposed development.

19. The following City of Buckeye departments have reviewed and have found no outstanding issues with the application:

    - Fire
    - Public Works
    - Police
    - Development Services, including Planning and Civil Engineering/Survey

. RECOMMENDATION:

20. Staff recommends the Mayor and City Council conduct a public hearing and adopt ordinance No. 27-24, approving PLZZ-24-0007, a Rezone from Special Use (SU) to Downtown Residential (DR) for 305 East Baseline Road Rezone, subject to Conditions (a) through (i), for the following reasons:
    - Furthers goals of the Buckeye General Plan and contributes to a vibrant Historic Downtown Buckeye Activity Center (The DSAP) with a residential use appropriate to the Activity Center
    - Conforms to the Buckeye Development Code
    - No outstanding issues from reviewing departments

Planning Division Conditions – Standard/General

a) The property owner/s and their successor waive any and all claims for diminution in value of the property with regard to any action taken by City of Buckeye as result of this approval.

Fire Department Conditions – Standard/General

b) The Buckeye Fire Chief and City Engineer shall determine the number, loca?on, and types of all fire hydrants.

c) All buildings shall be equipped with a fire protec?on system as required by City of Buckeye Ordinance 03-22.
d) Where two fire apparatus access roads are required, they shall be placed a distance apart equal to not less than one half of the length of the maximum overall diagonal dimension of the lot or area to be served, measured in a straight line between accesses.

Public Works Conditions – Standard/General

e) All landscaped areas within the public rights of way shall be designed and sealed by a landscape architect licensed by the Arizona Board of Technical Registra?on. The City Public Works Department shall review all irriga?on plans for material selec?on only; therefore, the landscape architect shall coordinate with the Public Works Department early in the design to ensure the most efficient means of landscape irriga?on that will reduce both long term maintenance costs and keep watering to the absolute minimum required for healthy growth of landscaping along the roadways of the City of Buckeye.
f) No new natural turf shall be installed in a public right-of-way or median. Areas with up to 10,000 square feet of turf within a public right-of-way at gateways, entrances to major communi?es, or special landscaping designs approved by the city's development services department are exempt from the restric?ons of this s?pula?on.
g) Plant material within the right-of-way shall not obstruct any regulatory signage or sight distance triangle as defined in the Engineering Development Standards.
h) The following trees are prohibited from any landscaping plans in accordance with Chapter 9 of City Code (Sec?on 9-10): Male Mulberry Tree (Morus Alba), Olive Tree (Olea Europea). Addi?onally, North Indian Rosewood Trees (Dalbergia Sissoo) shall not be planted within the rights of way (and are suggested not being planted within the property) due to their destruc?ve and invasive root structure.
i) Storm Drainage: The City of Buckeye is permi?ed as a Phase 2 MS4 and is now subject to more stringent standards for stormwater discharge. All stormwater plans must now meet the requirements of the City of Buckeye's MS4 permit as issued by ADEQ (Permit Number AZG2016-002).

ATTACHMENTS:

Exhibit A – Aerial Vicinity Map
Exhibit B – Existing Zoning Map
Exhibit C – Proposed Zoning Map
Exhibit D – General Plan Map
Exhibit E – Narrative
Exhibit F – Citizen Participation Report

Prepared By:
Jarek Dunn, Planner I

Reviewed By:
Ken Galica, Planning Manager

EXHIBIT A



VICINITY MAP

BUCKEYE, AZ

PLZZ-24-0007
305 E Baseline Road Rezone
City Council District #1

N
W E
S

EXHIBIT B

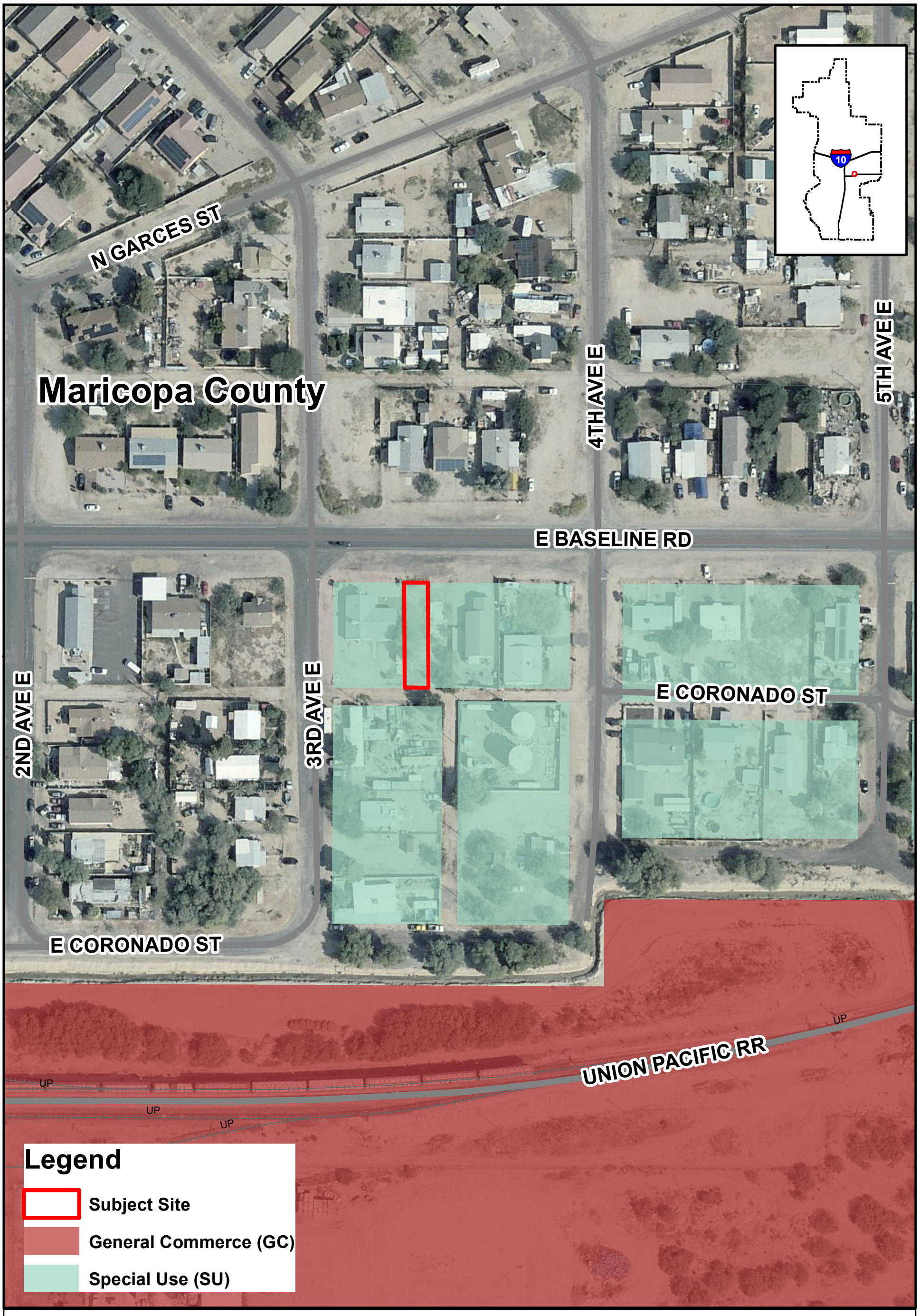

Existing Zoning Map

BUCKEYE, AZ

PLZZ-24-0007
305 E Baseline Road Rezone
City Council District #1

N
W E
S

EXHIBIT C

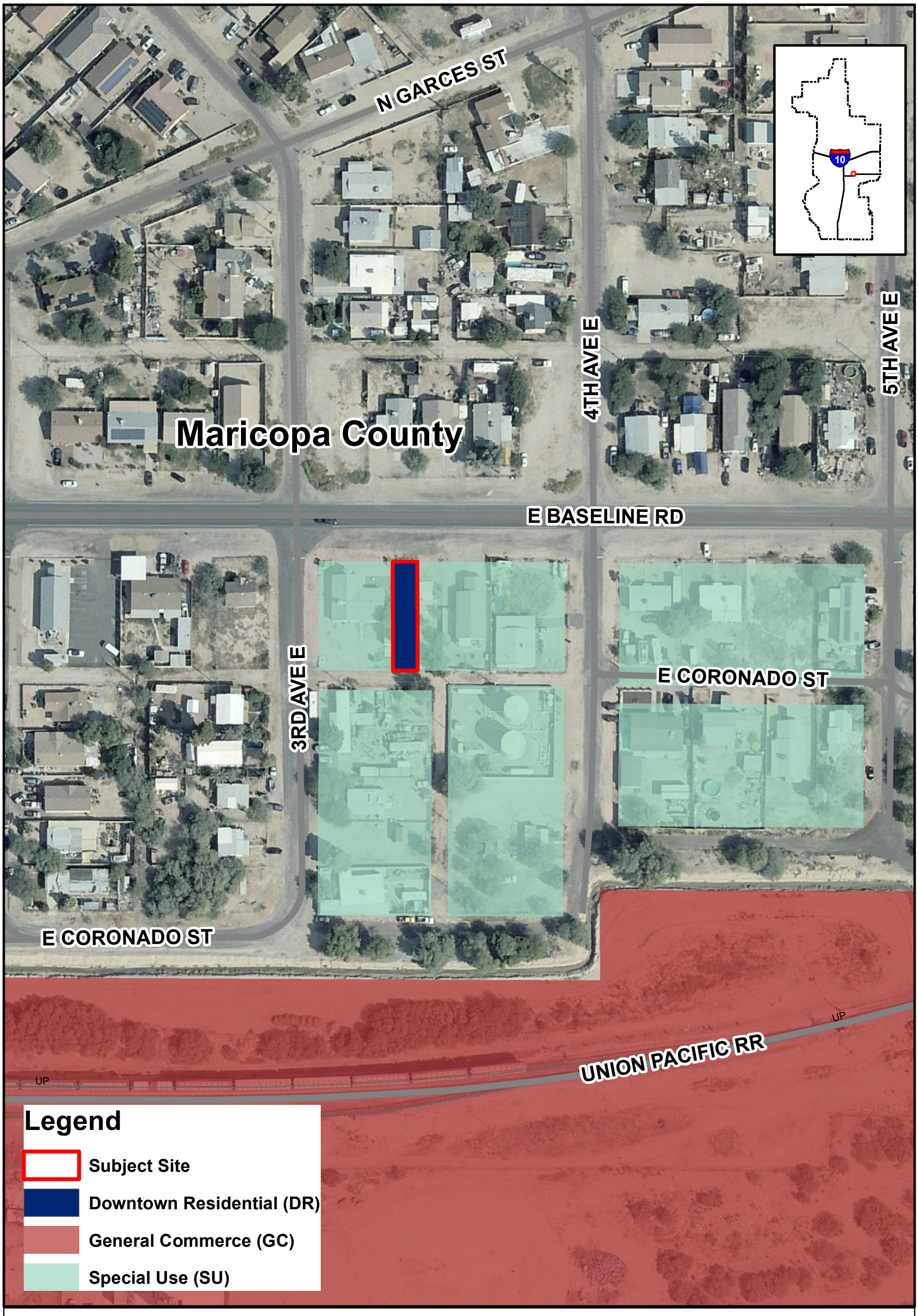

Proposed Zoning Map

BUCKEYE, AZ

PLZZ-24-0007
305 E Baseline Road Rezone
City Council District #1

N
W E
S

EXHIBIT D

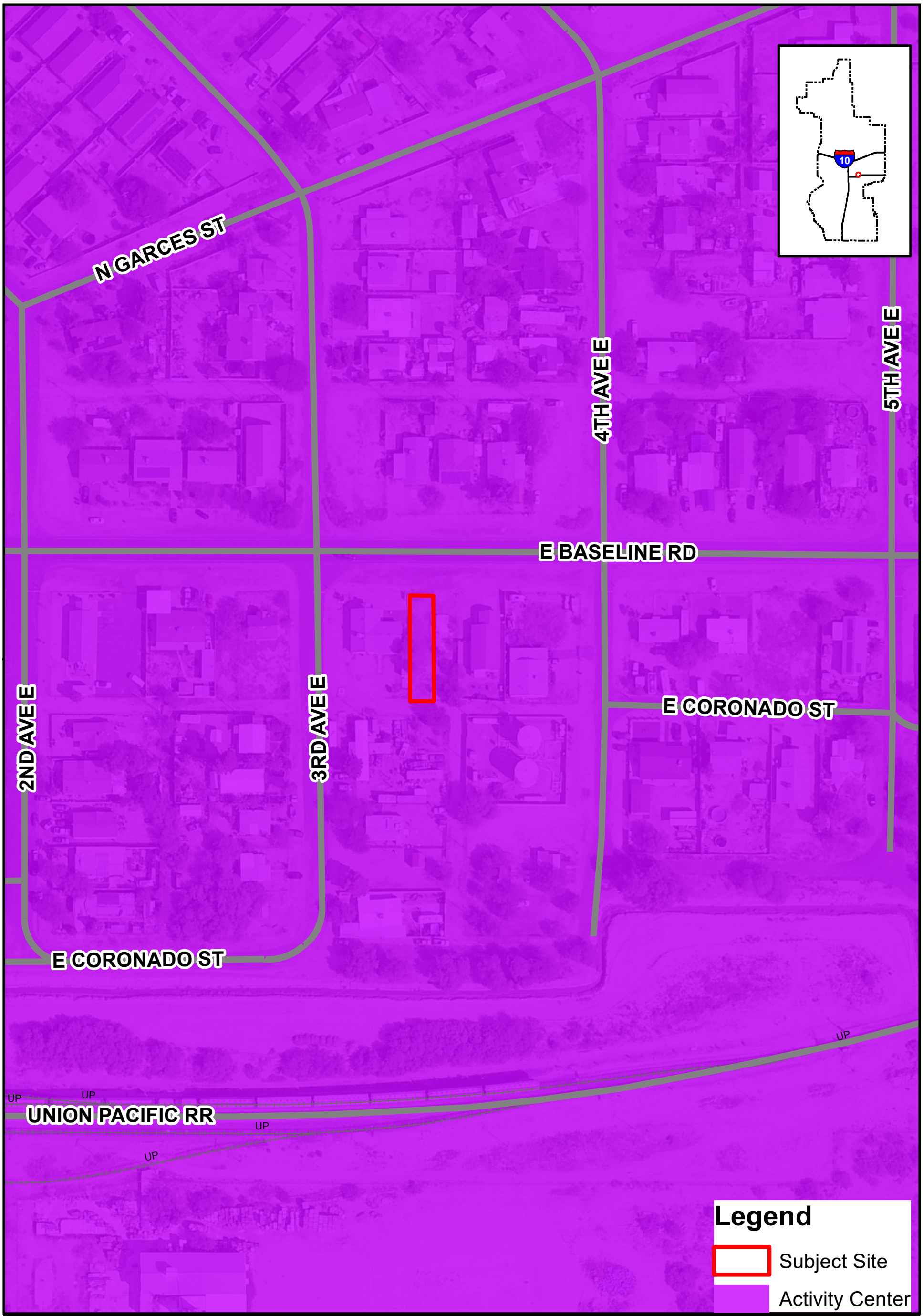

General Plan Land Use Map

BUCKEYE, AZ

PLZZ-24-0007
305 E Baseline Road Rezone
City Council District #1

N
W
E
S

Exhibit E

305 E BASELINE REZONE NARRATIVE

Address: 305 E Baseline Rd #2B Buckeye AZ 85326

Parcel: 504-51-006

Current Zoning Designation: SU (Special Use)

Requested Zoning Designation: DR (Downtown Residential)

Net Acreage: 0.075 acres



The goal of this project is to rezone the APN 504-51-006 to a residential zoning district for the purpose of constructing a residential duplex at 305 E BASELINE RD- described as Lot 2B, Block 10, of Valencia, recorded in Book 21 of maps, Page 44 - Parcel# 504-51-006.

The APN 504-51-006 is currently vacant and is under the general plan designation of Activity Center with a current zoning designation of Special Use (SU). With its proximity to Downtown Buckeye, we are requesting a rezone to zoning designation Downtown Residential (DR). 2/3 of the lot is currently designated lies within FEMA Flood Zone AH – therefore soil and drainage studies will be conducted and a Flood Zone construction use permit will be acquired prior to construction permit submittal.

The property currently can be connected to Buckeye City Water – for use as a water source.

APS electric utility is able to supply this property with services.

The property lies within the East Valencia Buckeye neighborhood and therefore has no access to Buckeye City Wastewater Management. A septic system will need to be installed on the property to handle wastewater management for the structure. A septic permit will be acquired through Maricopa County as it currently administers all septic related requests within the vicinity of 504-51-006.

There is no planned major impact to roadway circulation – parking will be accessible in the rear of the property via the E Coranado St Alley. The Alley will have dust control measurements put in place per Buckeye Public Works commentary, required Tamped Decomposed Granite up to the far edge of usage.

Fire sprinklers will be installed in the building per City of Buckeye Building Code. All portions of the structure will be accessible within 150’ from E Baseline Rd and therefore will not require a separate fire access lane pursuant to There is no planned impact to local schools. Land uses within three hundred (300) feet are also zoned as Special Use (SU) although there are many existing residential and commercial business within the vicinity of 504-51-006.

Lot Coverage for this project provides a 84.1% lot coverage and 15.9% building coverage. There is 2000sf of common open space per unit. The total open space for the project is 2500sf.

PLZZ-24-0007 305 E Baseline Rezone
Citizen Participation Plan
Date: 9/12/2024

305 E Baseline Rezone.

Citizen Participation Plan

Rezoning

APPROXIMATELY 0.075 ACRES

Located at 305 East Baseline Rd of West of 3rd Avenue E, East of 4th Avenue E and South of E Baseline Rd

Case Number: PLZZ-24-0007

PLZZ-24-0007 305 E Baseline Rezone
Citizen Participation Plan
Date: 9/12/2024

Purpose:

The purpose of this Citizen Participation Plan is to inform citizens, property owners, neighbor associations, and businesses in the vicinity of the site of an application for the 305 E Baseline Rezone.

The site is located at 305 East Baseline Rd of West of 3rd Avenue E, East of 4th Avenue E and South of E Baseline Rd. The site is composed of one parcel with a total area of 0.075 acres which is zoned SU (Special Use an obsolete zoning) and will require an amendment to the zoning map for this parcel. We are requesting DR (downtown residential) to allow for the proposed and future residential development on the property. The City of Buckeye General plan land use currently designates this parcel as AC (Activity Center) and allows for the use of DR zoning within the 1 mile downtown area for small residential and mixed-use projects that will help to enhance the downtown district.
This plan will ensure that those affected by this application will have an adequate opportunity to learn about and comment on the proposal.
Owner:
Brian Gersten
718-570-5398
buckeyeRezone@gmail.com
135 N Center ST
PO BOX 4346
Mesa, AZ 85211

Pre-submittal:
A pre-submittal was made on January 11 2024. Staff reviewed the application and recommended that the project be submitted to Planning and Zoning for a Site Plan Review.
Action Plan:
The following actions will be taken for effective citizen participation and to provide opportunities for input from the community.

1. 2 large signs will be posted on the site with information regarding the scheduled Planning and Zoning.
2. A contact list has been developed for citizens and agencies in this area including:
    a. Property owners within 300 feet from site. A notification map has been included with this report to show graphically where the 300' buffer occurs, and the properties associated with that notification boundary.
3. All persons on the contact list will be mailed letters describing the project along with an invitation to a neighborhood meeting and the required City meetings. Comments can be made through the neighborhood meeting and the email contact and phone number provided in the letter. These comments will be documented and provided to the City of Buckeye. A copy of the preliminary notification letter has been attached to the end of this report.

The notification letter, mentioned above, includes the date and time of the neighborhood meeting. During the meeting individuals will have the opportunity to comment/voice their concerns. Instructions for attending the meeting have been included in the attached sample notification letter.

Once the applicant has been notified of the hearing date(s) for the project, before Planning and Zoning Commission and City council Hearings are conducted, the following will occur at least 15 days prior to the first public hearing:

• A Citizen Participation Report detailing all outreach efforts will be submitted to the City of Buckeye,

• The Site will be posted with two physical postings in accordance with City of Buckeye requirements,

Physical Postings:

Physical posting of the property will occur on (month, Date, year) a minimum of 15 days before the scheduled hearing date for the planning commission on (month, Date, Year) and the City Council Meeting date on (month, Date, Year). Affidavits of posting along with photos will be provided as evidence of compliance with City requirements. All signs will be removed on (month, Date Year) 10 days after the City Council Public hearing and vote.

Note: there have been no comments, questions or concerns received as of the date of this initial participation plan, any comments will be copied to the project planner with the City of Buckeye and be included in the final citizen participation report.

• Mailed notices will be sent to all property owners and any interested parties / neighborhood groups as identified by City of Buckeye Staff.

Mailed Notice:

The notification process has been defined by guidelines provided by the City of Buckeye and includes all landowners within a 300’ buffer of the project property line. A notification map has been included with this report to show graphically where the 300’ buffer occurs, and the properties associated with that notification boundary. An affidavit of mailing shall be obtained by the applicant and given to the Development Services Department for their records.

• Published notification on an area newspaper or other approved printed media will be completed in accordance with the City of Buckeye Requirements.

Published Notice:

The applicant shall publish notice in a newspaper of general circulation in the area. The notice shall be published at least 15, but no more than 45, days before the scheduled hearing date. An affidavit of publication provided by the newspaper shall be obtained by the applicant and given to the Development Services Department for their records.

Changes and Amendments to the Proposed Development:
If a change or amendment occurs to the proposed development after the initial mailing, another notification letter will be mailed, as soon as possible, before the hearing date. There have been no changes to the proposed development as of the date of this CPP.

Status Updates to City Planning Staff:
City of Buckeye planning staff has been involved in developing the notification list and has approved the notification letter. This CPP will be submitted to the planning staff before the public hearings. Planning staff will be invited to the public meeting and will receive any communications with citizens or other interested parties. A final Citizens Participation Report will be created summarizing the results of the efforts outlined within the Citizen Participation Plan.

Schedule:

Pre-submittal: January 11 2024
In-Person Neighborhood Meeting Letter sent to Planner – May 17 2024
In-Person Neighborhood Meeting Mailing – May 17 2024
In-Person neighborhood Meeting – June 21 2024
Virtual Neighborhood Meeting Letter sent to Planner –September 12 2024
Virtual Neighborhood Meeting Mailing – September 13 2024
Virtual neighborhood Meeting – October 1 2024

Topic: Neighborhood Meeting Buckeye 305 E Baseline
Time: Oct 1, 2024 06:00 PM Arizona
Join Zoom Meeting
https://us05web.zoom.us/j/83920295120?pwd=I82ayQJWH0ZyiTlakTrNbjS8V7hsaV.1
Meeting ID: 839 2029 5120
Passcode: 7xbDxu

Duplex 305 E Baseline Rd
Citizen Participation Plan
Date:

Dear Neighbor,

We are contacting you to inform you of a new duplex development in your neighborhood at 305 E Baseline Rd - 305 East Baseline Rd of West of 3rd Avenue E, East of 4th Avenue E and South of E Baseline Rd. The assessor's parcel number for the property is 504-51-006. The site is composed of one parcel with a total area of 0.075 acres which is currently zoned SU. Each unit is planned to be 256 square feet in single story with an additional ground-floor patio. The total area of the 2-unit building is 512 square feet.

We are requesting an amendment to the zoning map to the SU zoning currently designated by the City of Buckeye to a residential zoning of DR. An in-person neighborhood meeting will be held on Friday, June 21, 2024, from 12:00 to 1:00 PM to present the project and allow for community input.

You are invited to attend and provide any input you may have regarding this proposal. Our request is subject to hearing review by the Buckeye Planning and Zoning Commission. This meeting is being held to take comments and provide answers in advance of those hearings. You will be notified of the hearings once they are scheduled with a follow-up mailing.
Please see the meeting information below.

Please contact Brian at buckeyeduplex@gmail.com or 718-570 5398 with any comments or questions you have regarding this project.

Thank you,

Brian Gersten

Meeting Information:
Topic: Duplex 305 E Baseline Rd Neighborhood Meeting
Time: Friday, June 21, 2024, from 12:00 to 1:00 PM Arizona Time

Meeting Location Information:
Buckeye Public Library - Coyote Branch
21699 W Yuma Rd #116, Buckeye, AZ 85326

Affidavit of Mailing Notice

Case Number: PLZZ-24-0007

Project Name: 305 E BASELINE DUPLEX

Applicant Name: Brian Gersten

Location: Lot 2B, Block 10, of Valencia, recorded in Book 21 of maps, Page 44 - Parcel# 504-51-006

In order to assist in providing adequate notice to interested parties and to meet Arizona State Statue, the applicant for Neighborhood Meetings in the City of Buckeye shall secure the names and addresses of all property owners within 300 feet of all property lines of the subject application property either through a title company or the Maricopa County Assessor's web site and shall send the Neighborhood Meeting notice to each said owner no less than fifteen (15) days prior to the Neighborhood Meeting date.

I confirm that I secured the names and addresses of all property owners within 300 feet of all property lines of the subject application property either through a title company or the Maricopa County Assessor's web site and did send the public hearing notice to each said owner no less than fifteen (15) days prior to the Neighborhood Meeting

See attached copies of all sent letters and address lists.

Applicant's / Representative's signature: Brian Gersten

SUBSCRIBED AND SWORN before me this 3 day of August, 2024, by:

Brian Gersten

Notary Public Naomi Araujo

My Commission Expires:

July 30, 2026

NAOMI ARAUJO
Notary Public - State of Arizona
MARICOPA COUNTY
Commission # 633142
Expires July 30, 2026

Home > My account > Order Success

Order Confirmed

Thank you buckeyeduplex@gmail.com, for your purchase!

Your order for $53.22 has been received.

Your Order # is
14025150114
.

You will receive an order confirmation email with details of your order and a link to track its progress.

PRINT ORDER CONFIRMATION COPY

GO TO MY ACCOUNT

SIGN OUT

Click2Mail

Order No.14025149797

Order Total: $53.22

Order Date
May 17, 2024, 10:55:49 PM (EDT)

Account
buckeyeduplex@gmail.com

Payment Method
Paypal

Credit Card Number xxxx-9662

Payer Email [redacted]@gmail.com

Number of Jobs
1

Billing Address
NA

Job and Product Information	Requsted Fulfillment Date	Actual Fulfillment Date	Quantity	Sub total
Job ID: **25564860** Letter - Separate Address Page in a #10 Envelope - 5 sheet max. Product SKU: LT41-P Job Source: PMUI Product Type: Letter 8.5 X 11, Paper Type: White 24#, Print Color: Black And White, Print Options: Printing One Side, Mail Class: First Class, Production Time: Next Day, Com: NO, Base Document Name: Neighborhood_Meeting_Mailer Job Address List Name: 300 Ft Neighborhood Parcels_1 Production Cost for 52 Pieces: $21.42 First Class Automation Letter Postage for 49 Pieces: $27.98 First Class Unsorted Letter Postage for 3 Pieces: $2.04	5/18/2024		52	$51.44

Invoice Subtotal:	**$51.44**
Tax:	**$1.78**
Total Invoice:	**$53.22**

Brian Gersten
135 N Center St
PO Box 4346
Mesa, AZ 85211-4346

PENTECOSTAL CHURCH OF GOD
PO Box 48498
Phoenix, AZ 85075

PROOF

Duplex 305 E Baseline Rd
Citizen Participation Plan
Date: 5/17/24

Dear Neighbor,

We are contacting you to inform you of a new duplex development in your neighborhood at 305 E Baseline Rd - 305 East Baseline Rd of West of 3rd Avenue E, East of 4th Avenue E and South of E Baseline Rd. The assessor's parcel number for the property is 504-51-006. The site is composed of one parcel with a total area of 0.075 acres which is currently zoned SU. Each unit is planned to be 256 square feet in single story with an additional ground-floor patio. The total area of the 2-unit building is 512 square feet.

We are requesting an amendment to the zoning map to the SU zoning currently designated by the City of Buckeye to a residential zoning of DR. An in-person neighborhood meeting will be held on Friday, June 21, 2024, from 12:00 to 1:00 PM to present the project and allow for community input.

You are invited to attend and provide any input you may have regarding this proposal. Our request is subject to hearing review by the Buckeye Planning and Zoning Commission. This meeting is being held to take comments and provide answers in advance of those hearings. You will be notified of the hearings once they are scheduled with a follow-up mailing.
Please see the meeting information below.

Please contact Brian at buckeyeduplex@gmail.com or 718-570 5398 with any comments or questions you have regarding this project.

Thank you,

Brian Gersten

Meeting Information:
Topic: Duplex 305 E Baseline Rd Neighborhood Meeting
Time: Friday, June 21, 2024, from 12:00 to 1:00 PM Arizona Time

Meeting Location Information:
Buckeye Public Library - Coyote Branch
21699 W Yuma Rd #116, Buckeye, AZ 85326

PROOF

Brian Gersten
135 N Center St
PO Box 4346
Mesa, AZ 85211-4346

DOMINGUEZ BLANCA G
18931 W Jefferson St
Buckeye, AZ 85326-5756

PROOF

Duplex 305 E Baseline Rd
Citizen Participation Plan
Date: 5/17/24

Dear Neighbor,

We are contacting you to inform you of a new duplex development in your neighborhood at 305 E Baseline Rd - 305 East Baseline Rd of West of 3rd Avenue E, East of 4th Avenue E and South of E Baseline Rd. The assessor's parcel number for the property is 504-51-006. The site is composed of one parcel with a total area of 0.075 acres which is currently zoned SU. Each unit is planned to be 256 square feet in single story with an additional ground-floor patio. The total area of the 2-unit building is 512 square feet.

We are requesting an amendment to the zoning map to the SU zoning currently designated by the City of Buckeye to a residential zoning of DR. An in-person neighborhood meeting will be held on Friday, June 21, 2024, from 12:00 to 1:00 PM to present the project and allow for community input.

You are invited to attend and provide any input you may have regarding this proposal. Our request is subject to hearing review by the Buckeye Planning and Zoning Commission. This meeting is being held to take comments and provide answers in advance of those hearings. You will be notified of the hearings once they are scheduled with a follow-up mailing.
Please see the meeting information below.

Please contact Brian at buckeyeduplex@gmail.com or 718-570 5398 with any comments or questions you have regarding this project.

Thank you,

Brian Gersten

Meeting Information:
Topic: Duplex 305 E Baseline Rd Neighborhood Meeting
Time: Friday, June 21, 2024, from 12:00 to 1:00 PM Arizona Time

Meeting Location Information:
Buckeye Public Library - Coyote Branch
21699 W Yuma Rd #116, Buckeye, AZ 85326

PROOF

Brian Gersten
135 N Center St
PO Box 4346
Mesa, AZ 85211-4346

MARTINEZ ELIAS
307 3rd Ave E
Buckeye, AZ 85326-1305

PROOF

Duplex 305 E Baseline Rd
Citizen Participation Plan
Date: 5/17/24

Dear Neighbor,

We are contacting you to inform you of a new duplex development in your neighborhood at 305 E Baseline Rd - 305 East Baseline Rd of West of 3rd Avenue E, East of 4th Avenue E and South of E Baseline Rd. The assessor's parcel number for the property is 504-51-006. The site is composed of one parcel with a total area of 0.075 acres which is currently zoned SU. Each unit is planned to be 256 square feet in single story with an additional ground-floor patio. The total area of the 2-unit building is 512 square feet.

We are requesting an amendment to the zoning map to the SU zoning currently designated by the City of Buckeye to a residential zoning of DR. An in-person neighborhood meeting will be held on Friday, June 21, 2024, from 12:00 to 1:00 PM to present the project and allow for community input.

You are invited to attend and provide any input you may have regarding this proposal. Our request is subject to hearing review by the Buckeye Planning and Zoning Commission. This meeting is being held to take comments and provide answers in advance of those hearings. You will be notified of the hearings once they are scheduled with a follow-up mailing.
Please see the meeting information below.

Please contact Brian at buckeyeduplex@gmail.com or 718-570 5398 with any comments or questions you have regarding this project.

Thank you,

Brian Gersten

Meeting Information:
Topic: Duplex 305 E Baseline Rd Neighborhood Meeting
Time: Friday, June 21, 2024, from 12:00 to 1:00 PM Arizona Time

Meeting Location Information:
Buckeye Public Library - Coyote Branch
21699 W Yuma Rd #116, Buckeye, AZ 85326

PROOF

NAME

6/21/24

David C. Harris
Susan W. Harris
CRAIG GRUND

Neighborhood Meeting Summary

A neighborhood meeting was held on Friday, June 21, 2024, from 12:00 PM to 1:00 PM Arizona Time at the Buckeye Public Library - Coyote Branch, located at 21699 W Yuma Rd #116, Buckeye, AZ 85326. A sign-in sheet detailing the three attendees is attached.

Mr. Craig Grund, a property owner, expressed concern regarding the feasibility of a septic system on the lot. This concern was addressed by explaining the septic system permitting process and our collaboration with a septic engineer to address any potential sizing issues in the future. No additional comments were made by Mr. Grund regarding the rezone proposal.

The remaining two attendees, Mr. and Mrs. Harris, Initially expressed a misunderstanding about the specific parcel undergoing rezoning. Upon clarification that the project boundaries were limited to parcel 504-51-006 and did not include parcel 504-51-**003** (the parcel neighboring their property), no further comments or concerns were raised.

The meeting concluded at 1:00 PM with no additional comments or questions raised regarding the rezone of parcel 504-51-006 from SU to DR.

PLZZ-24-0007 305 E Baseline Rezone
Citizen Participation Plan
Date: 9/12/2024

Dear Neighbor,

We are requesting an amendment to the zoning map to the Special Use (SU) zoning currently designated by the City of Buckeye to a residential zoning of Downtown Residential (DR) – Planning Case # PLZZ-24-0007.

We are contacting you to inform you of a Rezone in your neighborhood at 305 E Baseline Rd - 305 East Baseline Rd of West of 3rd Avenue E, East of 4th Avenue E and South of E Baseline Rd. The assessor's parcel number for the property is 504-51-006. The site is composed of one parcel with a total area of 0.075 acres which is currently zoned SU.

A virtual neighborhood meeting will be held on Tuesday, October 1, 2024, at 6:00 PM to present the project and allow for community input.

You are invited to attend and provide any input you may have regarding this proposal. Our request is subject to hearing review by the Buckeye Planning and Zoning Commission. This meeting is being held to take comments and provide answers in advance of those hearings. You will be notified of the hearings once they are scheduled with a follow-up mailing.

Please see the meeting information below.
Please contact Brian at buckeyeduplex@gmail.com or (623) 396 5009 with any comments or questions you have regarding this project.

Thank you,
Brian Gersten

Meeting Information:
Topic: Rezone 305 E Baseline Rd Neighborhood Meeting
Time: Tuesday, October 1, 2024, at 6:00 PM Arizona Time

Zoom Meeting Information:

Topic: Neighborhood Meeting Buckeye 305 E Baseline
Time: Oct 1, 2024 06:00 PM Arizona
Join Zoom Meeting
https://us05web.zoom.us/j/83920295120?pwd=I82ayQJWH0ZyiTlakTrNbjS8V7hsaV.1
Meeting ID: 839 2029 5120
Passcode: 7xbDxu

Contact:
Brian Gersten
buckeyeduplex@gmail.com
(623) 396 5009

Buckeye Planner Information:
Jarek Dunn
Planner I
Development Services Department
jdunn@buckeyeaz.gov
623.204.3002

Affidavit of Mailing Notice

Case Number: PLZZ-24-0007

Project Name: 305 E BASELINE Rezone

Applicant Name: Brian Gersten

Location: Lot 2B, Block 10, of Valencia, recorded in Book 21 of maps, Page 44 - Parcel# 504-51-006

In order to assist in providing adequate notice to interested parties and to meet Arizona State Statue, the applicant for Neighborhood Meetings in the City of Buckeye shall secure the names and addresses of all property owners within 300 feet of all property lines of the subject application property either through a title company or the Maricopa County Assessor's web site and shall send the Neighborhood Meeting notice to each said owner no less than fifteen (15) days prior to the Neighborhood Meeting date.

I confirm that I secured the names and addresses of all property owners within 300 feet of all property lines of the subject application property either through a title company or the Maricopa County Assessor's web site and did send the public hearing notice to each said owner no less than fifteen (15) days prior to the Neighborhood Meeting

See attached copies of all sent letters and address lists.

Applicant's / Representative's signature: Brian Gersten

SUBSCRIBED AND SWORN before me this 13th day of September, 2024, by:

Brian Gersten

Notary Public

My Commission Expires:

05/20/2028

NAOMI BIRD
Notary Public - Arizona
Maricopa County
Commission # 668047
My Commission Expires May 20, 2028

Home > My account > Order Success

Order Confirmed

Thank you buckeyeduplex@gmail.com, for your purchase!

Your order for $47.21 has been received.

Your Order # is
14026798769
.

You will receive an order confirmation email with details of your order and a link to track its progress.

PRINT ORDER CONFIRMATION COPY

GO TO MY ACCOUNT

SIGN OUT

Click2Mail

Order No.14026798769

Order Total: $47.21

Order Date
Sep 12, 2024, 4:34:29 PM (EDT)

Account
buckeyeduplex@gmail.com

Payment Method
Paypal

Credit Card Number xxxx-8520

Payer Email [redacted]

Number of Jobs
1

Billing Address
NA

Job and Product Information	Requsted Fulfillment Date	Actual Fulfillment Date	Quantity	Sub total
Job ID: **27241904** Letter - Separate Address Page in a #10 Envelope - 5 sheet max. Product SKU: LT41-P Job Source: PMUI Product Type: Letter 8.5 X 11, Paper Type: White 24#, Print Color: Black And White, Print Options: Printing One Side, Mail Class: First Class, Production Time: Next Day, Com: NO, Base Document Name: Mailing_letter_neighborhood_meeting_fina Job Address List Name: 300 Ft Neighborhood Parcels FOR CLICK2MA Production Cost for 44 Pieces: $18.13 First Class Automation Letter Postage for 42 Pieces: $26.12 First Class Unsorted Letter Postage for 2 Pieces: $1.46	9/13/2024		44	$45.71

Invoice Subtotal:	**$45.71**
Tax:	**$1.50**
Total Invoice:	**$47.21**

Brian Gersten
PO BOX 4346
Mesa, AZ 85211

PENTECOSTAL CHURCH OF GOD
PO Box 48498
Phoenix, AZ 85075

PROOF

PLZZ-24-0007 305 E Baseline Rezone
Citizen Participation Plan
Date: 9/12/2024

Dear Neighbor,

We are requesting an amendment to the zoning map to the Special Use (SU) zoning currently designated by the City of Buckeye to a residential zoning of Downtown Residential (DR) – Planning Case # PLZZ-24-0007.

We are contacting you to inform you of a Rezone in your neighborhood at 305 E Baseline Rd - 305 East Baseline Rd of West of 3rd Avenue E, East of 4th Avenue E and South of E Baseline Rd. The assessor's parcel number for the property is 504-51-006. The site is composed of one parcel with a total area of 0.075 acres which is currently zoned SU.

A virtual neighborhood meeting will be held on Tuesday, October 1, 2024, at 6:00 PM to present the project and allow for community input.

You are invited to attend and provide any input you may have regarding this proposal. Our request is subject to hearing review by the Buckeye Planning and Zoning Commission. This meeting is being held to take comments and provide answers in advance of those hearings. You will be notified of the hearings once they are scheduled with a follow-up mailing.

Please see the meeting information below.
Please contact Brian at buckeyeduplex@gmail.com or (623) 396 5009 with any comments or questions you have regarding this project.

Thank you,
Brian Gersten

Meeting Information:
Topic: Rezone 305 E Baseline Rd Neighborhood Meeting
Time: Tuesday, October 1, 2024, at 6:00 PM Arizona Time

Zoom Meeting Information:

Topic: Neighborhood Meeting Buckeye 305 E Baseline
Time: Oct 1, 2024 06:00 PM Arizona
Join Zoom Meeting
https://us05web.zoom.us/j/83920295120?pwd=I82ayQJWH0ZyiTlakTrNbjS8V7hsaV.1
Meeting ID: 839 2029 5120
Passcode: 7xbDxu

Contact:
Brian Gersten
buckeyeduplex@gmail.com
(623) 396 5009

Buckeye Planner Information:
Jarek Dunn
Planner I
Development Services Department
jdunn@buckeyeaz.gov
623.204.3002

PROOF

Brian Gersten
PO BOX 4346
Mesa, AZ 85211

DOMINGUEZ BLANCA G
18931 W Jefferson St
Buckeye, AZ 85326-5756

PROOF

PLZZ-24-0007 305 E Baseline Rezone
Citizen Participation Plan
Date: 9/12/2024

Dear Neighbor,

We are requesting an amendment to the zoning map to the Special Use (SU) zoning currently designated by the City of Buckeye to a residential zoning of Downtown Residential (DR) – Planning Case # PLZZ-24-0007.

We are contacting you to inform you of a Rezone in your neighborhood at 305 E Baseline Rd - 305 East Baseline Rd of West of 3rd Avenue E, East of 4th Avenue E and South of E Baseline Rd. The assessor's parcel number for the property is 504-51-006. The site is composed of one parcel with a total area of 0.075 acres which is currently zoned SU.

A virtual neighborhood meeting will be held on Tuesday, October 1, 2024, at 6:00 PM to present the project and allow for community input.

You are invited to attend and provide any input you may have regarding this proposal. Our request is subject to hearing review by the Buckeye Planning and Zoning Commission. This meeting is being held to take comments and provide answers in advance of those hearings. You will be notified of the hearings once they are scheduled with a follow-up mailing.

Please see the meeting information below.
Please contact Brian at buckeyeduplex@gmail.com or (623) 396 5009 with any comments or questions you have regarding this project.

Thank you,
Brian Gersten

Meeting Information:
Topic: Rezone 305 E Baseline Rd Neighborhood Meeting
Time: Tuesday, October 1, 2024, at 6:00 PM Arizona Time

Zoom Meeting Information:

Topic: Neighborhood Meeting Buckeye 305 E Baseline
Time: Oct 1, 2024 06:00 PM Arizona
Join Zoom Meeting
https://us05web.zoom.us/j/83920295120?pwd=I82ayQJWH0ZyiTlakTrNbjS8V7hsaV.1
Meeting ID: 839 2029 5120
Passcode: 7xbDxu

Contact:
Brian Gersten
buckeyeduplex@gmail.com
(623) 396 5009

Buckeye Planner Information:
Jarek Dunn
Planner I
Development Services Department
jdunn@buckeyeaz.gov
623.204.3002

PROOF

Brian Gersten
PO BOX 4346
Mesa, AZ 85211

MARTINEZ ELIAS
307 3rd Ave E
Buckeye, AZ 85326-1305

PROOF

PLZZ-24-0007 305 E Baseline Rezone
Citizen Participation Plan
Date: 9/12/2024

Dear Neighbor,

We are requesting an amendment to the zoning map to the Special Use (SU) zoning currently designated by the City of Buckeye to a residential zoning of Downtown Residential (DR) – Planning Case # PLZZ-24-0007.

We are contacting you to inform you of a Rezone in your neighborhood at 305 E Baseline Rd - 305 East Baseline Rd of West of 3rd Avenue E, East of 4th Avenue E and South of E Baseline Rd. The assessor's parcel number for the property is 504-51-006. The site is composed of one parcel with a total area of 0.075 acres which is currently zoned SU.

A virtual neighborhood meeting will be held on Tuesday, October 1, 2024, at 6:00 PM to present the project and allow for community input.

You are invited to attend and provide any input you may have regarding this proposal. Our request is subject to hearing review by the Buckeye Planning and Zoning Commission. This meeting is being held to take comments and provide answers in advance of those hearings. You will be notified of the hearings once they are scheduled with a follow-up mailing.

Please see the meeting information below.
Please contact Brian at buckeyeduplex@gmail.com or (623) 396 5009 with any comments or questions you have regarding this project.

Thank you,
Brian Gersten

Meeting Information:
Topic: Rezone 305 E Baseline Rd Neighborhood Meeting
Time: Tuesday, October 1, 2024, at 6:00 PM Arizona Time

Zoom Meeting Information:

Topic: Neighborhood Meeting Buckeye 305 E Baseline
Time: Oct 1, 2024 06:00 PM Arizona
Join Zoom Meeting
https://us05web.zoom.us/j/83920295120?pwd=I82ayQJWH0ZyiTlakTrNbjS8V7hsaV.1
Meeting ID: 839 2029 5120
Passcode: 7xbDxu

Contact:
Brian Gersten
buckeyeduplex@gmail.com
(623) 396 5009

Buckeye Planner Information:
Jarek Dunn
Planner I
Development Services Department
jdunn@buckeyeaz.gov
623.204.3002

PROOF

October 1 – Sign-In

No Attendees Were Present Aside from the Buckeye Planner Jarrek Dunne

October 1 – Virtual Neighborhood Meeting Summary

No Attendees Were Present Aside from the Buckeye Planner Jarrek Dunne

Parcel Number	Owner	Property Address
504-51-001C	PENTECOSTAL CHURCH OF GOD	301 E BASELINE RD BUCKEYE 85326
504-51-002	PENTECOSTAL CHURCH OF GOD	301 E BASELINE RD BUCKEYE 85326
504-51-003	DOMINGUEZ BLANCA	305 E BASELINE RD BUCKEYE 85326
504-51-004A	WERMAGER SUSAN	307 E BASELINE RD BUCKEYE 85326
504-51-006	GERSTEN BRIAN	305 E BROADWAY RD BUCKEYE 85326
504-51-008A	GRUND CRAIG/LYNN	401 E 4TH AVE BUCKEYE 85326
504-51-011A	BUCKEYE CITY OF	
504-51-012	HABITAT FOR HUMANITY CENTRAL ARIZONA	411 E 4TH AVE BUCKEYE 85326
504-51-013	CORONA RUBEN BENJAMIN/CERVANTES OLIVIA YULIANA BARRAGAN	413 4TH AVE E BUCKEYE 85326
504-51-014	CORONA RUBEN BENJAMIN/OLIVIA BARRAGAN	413 4TH AVE E BUCKEYE 85326
504-51-015	PINA GERARDO PINA/GARCIA MA R CAMPOS	416 3RD AVE E BUCKEYE 85326
504-51-016	DIIORIO LESA	414 3RD AVE E BUCKEYE 85326
504-51-017	RAMIREZ DARLA L	412 3RD AVE E BUCKEYE 85326
504-51-018	HOUSE CHARLIE FLOYD SR TR	410 3RD AVE E BUCKEYE 85326
504-51-019	HOUSE CHARLIE FLOYD & PATRICIA A	408 3RD AVE E BUCKEYE 85326
504-51-020A	MCVEY GEORGE J/CATHERINE	401 E BASELINE RD BUCKEYE 85326
504-51-026A	MURRIETA ANTONIO RIVERA	409 E BASELINE RD BUCKEYE 85326
504-51-033A	HERNANDEZ LUIS/TANORI MARIA DEL CARMEN	406 4TH AVE E BUCKEYE 85326
504-51-050	FRANCO SYLVESTRE V	
504-51-051	DEL ROSARIO AGUILAR ELISA/REYNAGA LOPEZ JUAN MANUEL	406 E BASELINE RD BUCKEYE 85326
504-51-052	PEREZ DOMINGO/MARILYN L	410 E BASELINE RD BUCKEYE 85326
504-51-053	GRIJALVA HECTOR/GLORIA Y	414 E BASELINE RD BUCKEYE 85326
504-51-054	CY DESERT LAND LLC	
504-51-055	LOPEZ JUAN MANUEL REYNAGA/AGUILAR ELISA DEL ROSARIO	
504-51-056	DEL ROSARIO AGUILAR ELISA/REYNAGA LOPEZ JUAN MANUEL	408 E BASELINE RD BUCKEYE 85326
504-51-057	PEREZ DOMINGO/MARILYN L	410 E BASELINE RD BUCKEYE 85326
504-51-058	GRIJALVA HECTOR/GLORIA Y	414 E BASELINE RD BUCKEYE 85326
504-51-059	DOMINGUEZ BLANCA G	406 E BASELINE RD BUCKEYE 85326
504-51-060	CARRILLO CIPRIANO/MARIA GUADALUPE	7232 E 4TH AVE BUCKEYE 85326
504-51-061	MONTES ALEJANDRO	305 4TH AVE E BUCKEYE 85326
504-51-067	PEREZ HECTOR ASTORGA/ROSALINA	306 3RD AVE E BUCKEYE 85326
504-51-068	GONZALEZ DAIAN/MEZA GUADALUPE	308 3RD AVE E BUCKEYE 85326
504-51-084	ARELLANO SALVADOR MARQUEZ JR	514 E BASELINE RD BUCKEYE 85326
504-51-085A	GRIJALVA CYNTHIA E	516 E BASELINE RD BUCKEYE 85326
504-54-043	MAYA CONCEPCION M	309 E BASELINE RD BUCKEYE 85326
504-54-044	MAYA CONCEPCION M	309 E BASELINE RD BUCKEYE 85326
504-54-045	UM KONGKEASEILA	215 E BASELINE RD BUCKEYE 85326
504-54-046A	TRUE HOLINESS CHURCH OF GOD IN CHRIST	317 E BASELINE RD BUCKEYE 85326
504-54-048	MAYA CONCEPCION M	309 E BASELINE RD BUCKEYE 85326
504-54-049	LAMBARO JOY	215 E BASELINE RD BUCKEYE 85326
504-54-050	UM KONGKEASEILA	215 E BASELINE RD BUCKEYE 85326
504-54-051	ESPINOZA GABINO HERIBERTO REYES/GUERRERO MATLINDA	407 3RD AVE E BUCKEYE 85326
504-54-052	HOLLIGAN BILLY GENE & MARY JANE	409 3RD AVE E BUCKEYE 85326
504-54-053	HOLLIGAN BILLY GENE/MARY JANE	409 3RD AVE E BUCKEYE 85326
504-54-054	HOLLIGAN BILL GENE/MARY J	411 3RD AVE E BUCKEYE 85326
504-54-055	PEINADO INVESTMENTS LLC	
504-54-058	MESQUIAS VICTOR J	410 2ND AVE E BUCKEYE 85326
504-54-059	G DOMINNGO PEREZ	408 2ND AVE E BUCKEYE 85326
504-54-060	RUIZ MARIO SAMUEL IMPERIAL	408 2ND AVE E BUCKEYE 85326
504-54-134A	DICKERSON BILLY JOE/BILLY J JR/JUDY KAY/WENDELL RAY/CRAFT MARGIE SUE/NARRAMORE SHELLY MARIE	308 E BASELINE RD BUCKEYE 85326
504-54-135A	MEZA RICARDO/ISABEL	310 E BASELINE RD BUCKEYE 85326
504-54-136A	LAJOIE JEREMY	320 E BASELINE RD BUCKEYE 85326
504-54-142A	MARTINEZ ELIAS	307 3RD AVE E BUCKEYE 85326


MARICOPA COUNTY
ASSESSOR'S OFFICE
Home
FAQ
Contact Us
Help
Version 3.5
Feature Information
(1 of 1)
Clear
504-51-006
Owner Information
Owner Name: GERSTEN BRIAN
In Care Of:
Property Address: 305 E BROADWAY RD BUCKEYE 85326
Mailing Address: 131 S TEMPLE ST MESA AZ USA 85204
Deed Number: 20230617400
Sale Date: 12/01/2023
Sale Price: $35000
Property Information
Lat/Long: 33.379097 , -112.580599
S/T/R: 32 1N 3W
Jurisdiction: BUCKEYE
PUC: 0012
Lot Size (sq ft): 3,240
MCR #: 21-44
Subdivision: VALENCIA
Lot #: 2B
Tract/Block: /10
Floor: 1
Construction Year:
Living Space (sq ft):
Valuation Information
Tax Year: 2025 2024
FCV: $ 25,600 $ 28,000
LPV: $ 6,029 $ 5,742
Legal Class: 2.R 2.R
Zoom to
Address or Intersection
VALENCIA
MCR: 021-44
N DENIZA BLVD
E Garces St
E Kino Pl
N Denza Blvd E
2nd Ave E
E BASELINE RD
N Central Blvd
1st Ave E
3rd Ave E
E Coronado St
E 2Nd Ave E
Ord # INCORPORATION
5/8/1929
228 ARIZONA EASTERN
200ft
-112.583974 33.380848 Degrees
Search By
Using the Mouse
What I Know
Buffer
Results
Features selected: 53
504-51-001C
Owner: PENTECOSTAL CHURCH OF GOD
Property Address: 301 E BASELINE RD BUCKEYE 85326
Mailing Address: PO BOX 48498 PHOENIX AZ USA 85075
Latitude: 33.379096321591
Longitude: -112.580821369983
504-51-002
Owner: PENTECOSTAL CHURCH OF GOD
Property Address: 301 E BASELINE RD BUCKEYE 85326
Mailing Address: PO BOX 48498 PHOENIX AZ USA 85075
Latitude: 33.3790969390186
Longitude: -112.58068785747

LocaliQ

Arizona

GANNETT

PO Box 632099, Cincinnati, OH 45263-2099

AFFIDAVIT OF PUBLICATION

Brian Gersten
Brian Gersten
131 S Temple ST
Mesa AZ 85204-1124

STATE OF WISCONSIN, COUNTY OF BROWN

The West Valley Republic, a publication of the Arizona Republic, a newspaper published in the city of Phoenix and general circulation in the counties of Maricopa, Coconino, Pima and Pinal, State of Arizona, and personal knowledge of the facts herein state and that the notice hereto annexed was Published in said newspapers in the issue:

11/06/2024

and that the fees charged are legal.
Sworn to and subscribed before on 11/06/2024

Legal Clerk

Notary, State of WI, County of Brown

10-25-26

My commission expires

Publication Cost:	$122.29	
Tax Amount:	$0.00	
Payment Cost:	$122.29	
Order No:	10709237	# of Copies:
Customer No:	1493607	1
PO #:		

THIS IS NOT AN INVOICE!

Please do not use this form for payment remittance.

RYAN SPELLER
Notary Public
State of Wisconsin

NOTICE IS HEREBY GIVEN that the City of Buckeye Planning and Zoning Commission will hold a public hearing on Tuesday, November 26, 2024 to be held at the City Council Chambers, located at 530 E Monroe, Avenue Buckeye, Arizona 85326 at 6:00 p.m., for the purpose of hearing all persons for or against the following request: (Case No. PLZZ-24-0007)
NOTICE IS HEREBY GIVEN that the City of Buckeye City Council will hold a public hearing on Tuesday, December 17th, 2024, to be held in the City Council Chambers, located at 530 E. Monroe Avenue, Buckeye, Arizona 85326 at 6:00 p.m., for the purpose of hearing all persons for or against the following request: (Case No. PLZZ-24-0007)
Case No. PLZZ-24-0007: Request by Brian Gersten for the approval of a Rezone located at 305 E Baseline Rd Buckeye, Arizona 85326 also known as Maricopa County Assessor's Parcel Number 504-51-006. This request will change the zoning from SU (Special Use) to DR (Downtown Residential) to allow for a residential duplex development.
For additional information, please see below contact information for the City of Buckeye and the Applicant:
Jarek Dunn: Planner I, City of Buckeye: (623) 204-3002
Brian Gersten: Applicant: (623) 396-5009
Pub: Nov 6, 2024

Affidavit of Sign Posting

Case Number: PLZZ-24-0007

Project Name: 305 E BASELINE REZONE

Applicant Name: BRIAN GERSTEN

Location: 305 East Baseline Rd of West of 3rd Avenue E, East of 4th Avenue E and South of E Baseline Rd 504-51-006

In order to assist in providing adequate notice to interested parties and to meet Arizona State Statue, the **applicant** for public hearings in the City of Buckeye shall post signs as prescribed by the "City of Buckeye Site Posting Requirements." **It shall be the responsibility of the applicant to erect and to maintain the sign on the subject property and to update the hearing information on the sign until the final disposition of the case. It shall also be the responsibility of the applicant to remove the sign within ten (10) days after the final disposition of the case.**

I confirm that the site has been posted as detailed by the City of Buckeye Site Posting Requirements for the case above and the site was posted at least fifteen (15) days prior to the public hearing.

See attached date stamped photo exhibit of posted signs.

Applicant's / Representative's signature: Brian Gerste

SUBSCRIBED AND SWORN before me this 7th day of November, 2024, by:

Alej Cont

Notary Public

ALEJANDRA CONTRERAS
Notary Public - Arizona
Maricopa County
Commission # 617379
My Commission Expires November 14,2025

My Commission Expires:

11/14/2025


CITY OF BUCKEYE
PUBLIC HEARING
PLANNING AND ZONING COMMISSION:
November 26 2024 at 6:00PM
CITY COUNCIL:
December 17 2024 at 6:00PM
LOCATION OF HEARINGS
530 EAST MONROE AVENUE BUCKEYE AZ 85326
REQUEST: REZONING APPLICATION FOR A RESIDENTIAL DUPLEX
PROPOSAL: A REZONE FROM SPECIAL USE SU TO DOWNTOWN RESIDENTIAL DR TO ALLOW FOR RESIDENTIAL DUPLEX DEVELOPMENT
SIZE: 0.07 ACRES
LOCATION: 305 EAST BASELINE RD BUCKEYE AZ 85326
CASE: PLZZ-24-0007
APPLICANT: Brian Gersten
PHONE: 623 396 5009
DEVELOPMENT DEPT: JAREK DUNN
SERVICES PHONE 623 204 3002
POSTING DATE: November 6 2024
11/06/2024

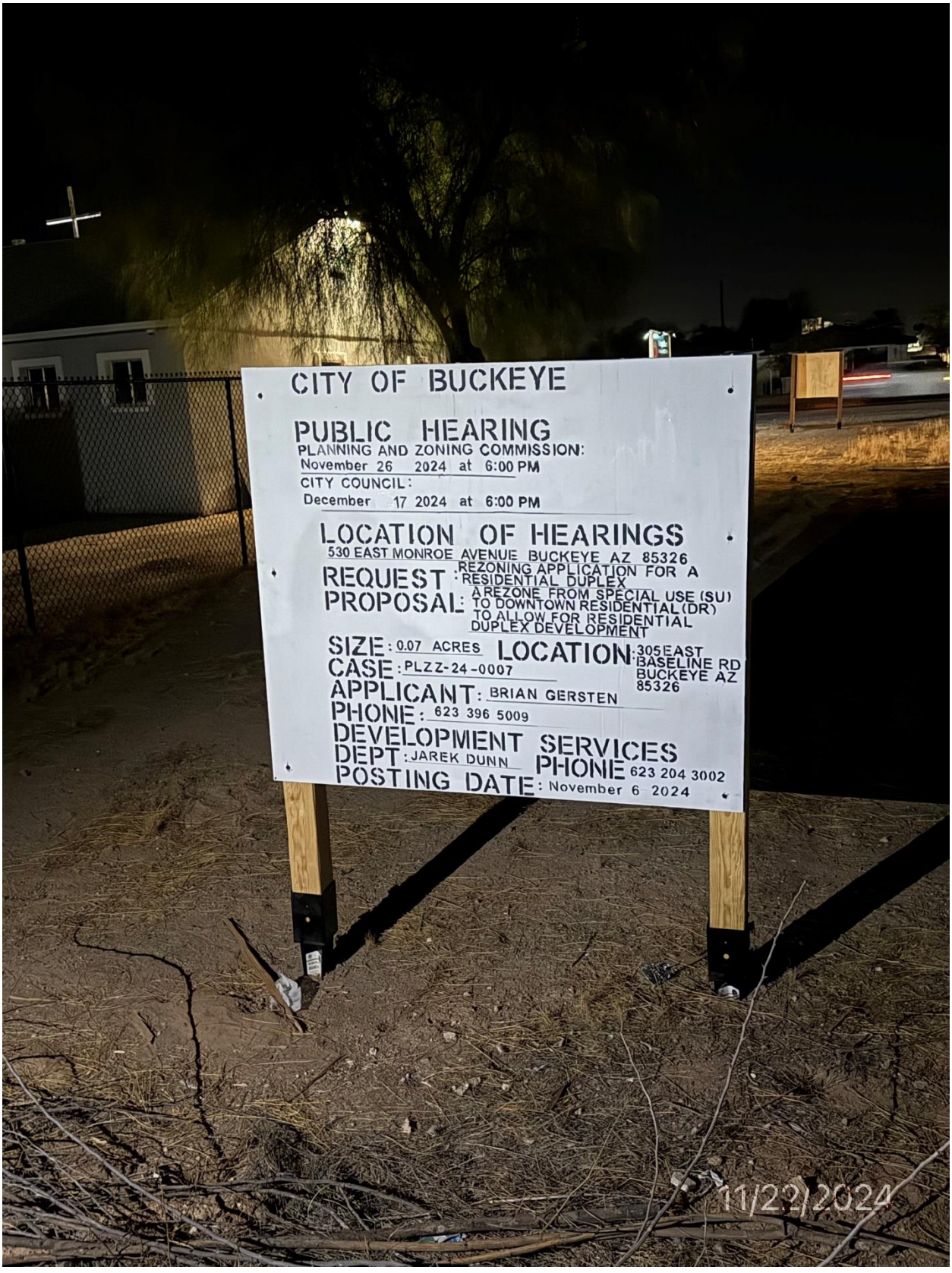
CITY OF BUCKEYE
PUBLIC HEARING
PLANNING AND ZONING COMMISSION:
November 26 2024 at 6:00 PM
CITY COUNCIL:
December 17 2024 at 6:00 PM
LOCATION OF HEARINGS
530 EAST MONROE AVENUE BUCKEYE AZ 85326
REQUEST: REZONING APPLICATION FOR A RESIDENTIAL DUPLEX
PROPOSAL: A REZONE FROM SPECIAL USE (SU) TO DOWNTOWN RESIDENTIAL (DR) TO ALLOW FOR RESIDENTIAL DUPLEX DEVELOPMENT
SIZE: 0.07 ACRES
LOCATION: 305 EAST BASELINE RD BUCKEYE AZ 85326
CASE: PLZZ-24-0007
APPLICANT: BRIAN GERSTEN
PHONE: 623 396 5009
DEVELOPMENT SERVICES DEPT: JAREK DUNN
PHONE 623 204 3002
POSTING DATE: November 6 2024
11/22/2024

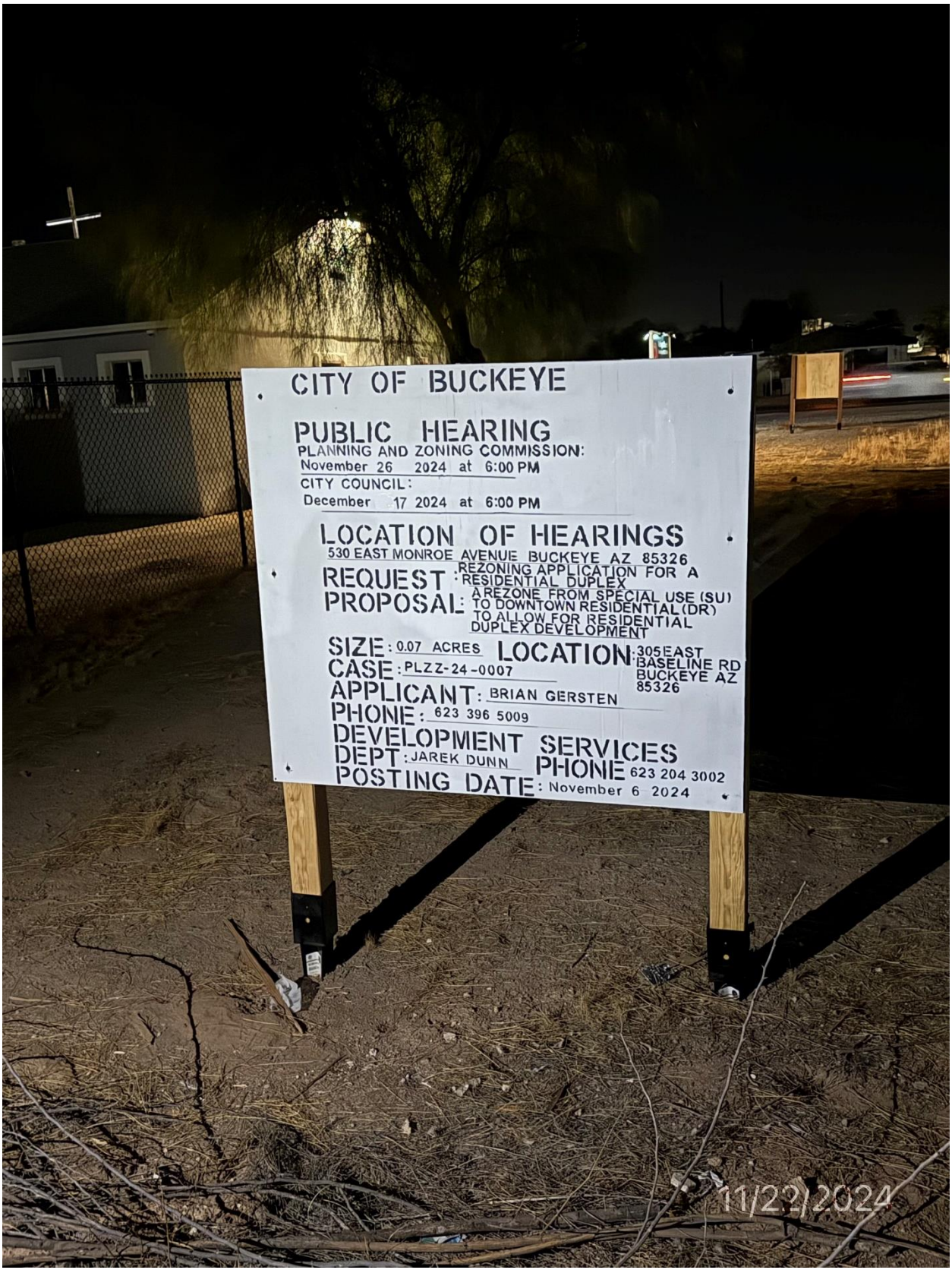
CITY OF BUCKEYE
PUBLIC HEARING
PLANNING AND ZONING COMMISSION:
November 26 2024 at 6:00 PM
CITY COUNCIL:
December 17 2024 at 6:00 PM
LOCATION OF HEARINGS
530 EAST MONROE AVENUE BUCKEYE AZ 85326
REQUEST: REZONING APPLICATION FOR A RESIDENTIAL DUPLEX
PROPOSAL: A REZONE FROM SPECIAL USE (SU) TO DOWNTOWN RESIDENTIAL (DR) TO ALLOW FOR RESIDENTIAL DUPLEX DEVELOPMENT
SIZE: 0.07 ACRES
LOCATION: 305 EAST BASELINE RD BUCKEYE AZ 85326
CASE: PLZZ-24-0007
APPLICANT: BRIAN GERSTEN
PHONE: 623 396 5009
DEVELOPMENT SERVICES
DEPT: JAREK DUNN
PHONE 623 204 3002
POSTING DATE: November 6 2024
11/22/2024

Affidavit of Mailing Notice

Case Number: PLZZ-24-0007

Project Name: 305 E BASELINE REZONE

Applicant Name: BRIAN GERSTEN

Location: 305 East Baseline Rd of West of 3rd Avenue E, East of 4th Avenue E and South of E Baseline Rd 504-51-006

In order to assist in providing adequate notice to interested parties and to meet Arizona State Statue, the applicant for public hearings in the City of Buckeye shall secure the names and addresses of all property owners within 300 feet of all property lines of the subject application property either through a title company or the Maricopa County Assessor's web site and shall send the public hearing notice to each said owner no less than fifteen (15) days prior to the public hearing date.

I confirm that I secured the names and addresses of all property owners within 300 feet of all property lines of the subject application property either through a title company or the Maricopa County Assessor's web site and did send the public hearing notice to each said owner no less than fifteen (15) days prior to the public hearing

See attached copies of all sent letters and address lists.

Applicant's / Representative's signature: Brian Gersten

SUBSCRIBED AND SWORN before me this 7th day of November, 2024, by:

Notary Public

My Commission Expires:

11/14/2025

ALEJANDRA CONTRERAS
Notary Public - Arizona
Maricopa County
Commission # 617379
My Commission Expires November 14,2025

ALEJANDRA CONTRERAS
Notary Public - Arizona
Maricopa County
Commission # 617379
My Commission Expires November 14,2025

PLZZ-24-0007 305 E Baseline Rezone

Dear Neighbor,

We are contacting you to inform you of the proposed rezoning of 305 East Baseline Road, Maricopa County Assessor parcel 504-51-006. The site is composed of one parcel with a total area of 0.075 acres which is currently zoned SU. You are receiving this notice because the property being rezoned is located within 300 feet of your property.

We are requesting an amendment to the zoning map from the Special Use (SU) zoning currently designated by the City of Buckeye to a residential zoning of Downtown Residential (DR) – Planning Case # PLZZ-24-0007. The rezoning would allow for development of the property with a residential duplex.

You are invited to attend the following hearings and provide any input you may have regarding this proposal:

Public Hearing before the Buckeye Planning and Zoning Commission:
Time: Tuesday, November 26, 2024, at at 6:00 PM Arizona Time
Location: City Council Chambers, located at 530 E Monroe Avenue Buckeye, AZ 85326.

Public Hearing before Buckeye City Council:
Time: Tuesday, December 17, 2024, at at 6:00 PM Arizona Time
Location: City Council Chambers, located at 530 E Monroe Avenue Buckeye, AZ 85326.

Please contact Brian at buckeyeduplex@gmail.com or (623) 396 5009 with any comments or questions you have regarding this project. You may also contact the City Planner assigned to the project, Jarek Dunn, at jdunn@buckeyeaz.gov or (623) 204-3002.

Thank you,
Brian Gersten

Home > My account > Order Success

Order Confirmed

Thank you buckeyeduplex@gmail.com, for your purchase!

Your order for $47.21 has been received.

Your Order # is
14027575859

.

You will receive an order confirmation email with details of your order and a link to track its progress.

PRINT ORDER CONFIRMATION COPY

GO TO MY ACCOUNT

SIGN OUT

Click2Mail

Order No.14027575859

Order Total: $47.21

Order Date
Nov 4, 2024, 9:19:33 PM (EST)

Account
buckeyeduplex@gmail.com

Payment Method
Paypal

Payer Email [redacted]@gmail.com

Number of Jobs
1

Billing Address
NA

Job and Product Information	Requsted Fulfillment Date	Actual Fulfillment Date	Quantity	Sub total
Job ID: **28044298** Letter - Separate Address Page in a #10 Envelope - 5 sheet max. Product SKU: LT41-P Job Source: PMUI Product Type: Letter 8.5 X 11, Paper Type: White 24#, Print Color: Black And White, Print Options: Printing One Side, Mail Class: First Class, Production Time: Next Day, Com: NO, Base Document Name: MAILED_NOTICE Job Address List Name: 300 Ft Neighborhood Parcels FOR CLICK2MA Production Cost for 44 Pieces: $18.13 First Class Automation Letter Postage for 42 Pieces: $26.12 First Class Unsorted Letter Postage for 2 Pieces: $1.46	11/6/2024		44	$45.71

Invoice Subtotal:	**$45.71**
Tax:	**$1.50**
Total Invoice:	**$47.21**

Brian Gersten
PO BOX 4346
Mesa, AZ 85211

PENTECOSTAL CHURCH OF GOD
PO Box 48498
Phoenix, AZ 85075

PROOF

PLZZ-24-0007 305 E Baseline Rezone

Dear Neighbor,

We are contacting you to inform you of the proposed rezoning of 305 East Baseline Road, Maricopa County Assessor parcel 504-51-006. The site is composed of one parcel with a total area of 0.075 acres which is currently zoned SU. You are receiving this notice because the property being rezoned is located within 300 feet of your property.

We are requesting an amendment to the zoning map from the Special Use (SU) zoning currently designated by the City of Buckeye to a residential zoning of Downtown Residential (DR) – Planning Case # PLZZ-24-0007. The rezoning would allow for development of the property with a residential duplex.

You are invited to attend the following hearings and provide any input you may have regarding this proposal:

Public Hearing before the Buckeye Planning and Zoning Commission:
Time: Tuesday, November 26, 2024, at at 6:00 PM Arizona Time
Location: City Council Chambers, located at 530 E Monroe Avenue Buckeye, AZ 85326.

Public Hearing before Buckeye City Council:
Time: Tuesday, December 17, 2024, at at 6:00 PM Arizona Time
Location: City Council Chambers, located at 530 E Monroe Avenue Buckeye, AZ 85326.

Please contact Brian at buckeyeduplex@gmail.com or (623) 396 5009 with any comments or questions you have regarding this project. You may also contact the City Planner assigned to the project, Jarek Dunn, at jdunn@buckeyeaz.gov or (623) 204-3002.

Thank you,
Brian Gersten

PROOF

Brian Gersten
PO BOX 4346
Mesa, AZ 85211

DOMINGUEZ BLANCA G
18931 W Jefferson St
Buckeye, AZ 85326-5756

PROOF

PLZZ-24-0007 305 E Baseline Rezone

Dear Neighbor,

We are contacting you to inform you of the proposed rezoning of 305 East Baseline Road, Maricopa County Assessor parcel 504-51-006. The site is composed of one parcel with a total area of 0.075 acres which is currently zoned SU. You are receiving this notice because the property being rezoned is located within 300 feet of your property.

We are requesting an amendment to the zoning map from the Special Use (SU) zoning currently designated by the City of Buckeye to a residential zoning of Downtown Residential (DR) – Planning Case # PLZZ-24-0007. The rezoning would allow for development of the property with a residential duplex.

You are invited to attend the following hearings and provide any input you may have regarding this proposal:

Public Hearing before the Buckeye Planning and Zoning Commission:
Time: Tuesday, November 26, 2024, at at 6:00 PM Arizona Time
Location: City Council Chambers, located at 530 E Monroe Avenue Buckeye, AZ 85326.

Public Hearing before Buckeye City Council:
Time: Tuesday, December 17, 2024, at at 6:00 PM Arizona Time
Location: City Council Chambers, located at 530 E Monroe Avenue Buckeye, AZ 85326.

Please contact Brian at buckeyeduplex@gmail.com or (623) 396 5009 with any comments or questions you have regarding this project. You may also contact the City Planner assigned to the project, Jarek Dunn, at jdunn@buckeyeaz.gov or (623) 204-3002.

Thank you,
Brian Gersten

PROOF

Brian Gersten
PO BOX 4346
Mesa, AZ 85211

MARTINEZ ELIAS
307 3rd Ave E
Buckeye, AZ 85326-1305

PROOF

PLZZ-24-0007 305 E Baseline Rezone

Dear Neighbor,

We are contacting you to inform you of the proposed rezoning of 305 East Baseline Road, Maricopa County Assessor parcel 504-51-006. The site is composed of one parcel with a total area of 0.075 acres which is currently zoned SU. You are receiving this notice because the property being rezoned is located within 300 feet of your property.

We are requesting an amendment to the zoning map from the Special Use (SU) zoning currently designated by the City of Buckeye to a residential zoning of Downtown Residential (DR) – Planning Case # PLZZ-24-0007. The rezoning would allow for development of the property with a residential duplex.

You are invited to attend the following hearings and provide any input you may have regarding this proposal:

Public Hearing before the Buckeye Planning and Zoning Commission:
Time: Tuesday, November 26, 2024, at at 6:00 PM Arizona Time
Location: City Council Chambers, located at 530 E Monroe Avenue Buckeye, AZ 85326.

Public Hearing before Buckeye City Council:
Time: Tuesday, December 17, 2024, at at 6:00 PM Arizona Time
Location: City Council Chambers, located at 530 E Monroe Avenue Buckeye, AZ 85326.

Please contact Brian at buckeyeduplex@gmail.com or (623) 396 5009 with any comments or questions you have regarding this project. You may also contact the City Planner assigned to the project, Jarek Dunn, at jdunn@buckeyeaz.gov or (623) 204-3002.

Thank you,
Brian Gersten

PROOF

Parcel Number	Owner	Property Address
504-51-001C	PENTECOSTAL CHURCH OF GOD	301 E BASELINE RD BUCKEYE 85326
504-51-002	PENTECOSTAL CHURCH OF GOD	301 E BASELINE RD BUCKEYE 85326
504-51-003	DOMINGUEZ BLANCA	305 E BASELINE RD BUCKEYE 85326
504-51-004A	WERMAGER SUSAN	307 E BASELINE RD BUCKEYE 85326
504-51-006	GERSTEN BRIAN	305 E BROADWAY RD BUCKEYE 85326
504-51-008A	GRUND CRAIG/LYNN	401 E 4TH AVE BUCKEYE 85326
504-51-011A	BUCKEYE CITY OF	
504-51-012	HABITAT FOR HUMANITY CENTRAL ARIZONA	411 E 4TH AVE BUCKEYE 85326
504-51-013	CORONA RUBEN BENJAMIN/CERVANTES OLIVIA YULIANA BARRAGAN	413 4TH AVE E BUCKEYE 85326
504-51-014	CORONA RUBEN BENJAMIN/OLIVIA BARRAGAN	413 4TH AVE E BUCKEYE 85326
504-51-015	PINA GERARDO PINA/GARCIA MA R CAMPOS	416 3RD AVE E BUCKEYE 85326
504-51-016	DIIORIO LESA	414 3RD AVE E BUCKEYE 85326
504-51-017	RAMIREZ DARLA L	412 3RD AVE E BUCKEYE 85326
504-51-018	HOUSE CHARLIE FLOYD SR TR	410 3RD AVE E BUCKEYE 85326
504-51-019	HOUSE CHARLIE FLOYD & PATRICIA A	408 3RD AVE E BUCKEYE 85326
504-51-020A	MCVEY GEORGE J/CATHERINE	401 E BASELINE RD BUCKEYE 85326
504-51-026A	MURRIETA ANTONIO RIVERA	409 E BASELINE RD BUCKEYE 85326
504-51-033A	HERNANDEZ LUIS/TANORI MARIA DEL CARMEN	406 4TH AVE E BUCKEYE 85326
504-51-050	FRANCO SYLVESTRE V	
504-51-051	DEL ROSARIO AGUILAR ELISA/REYNAGA LOPEZ JUAN MANUEL	406 E BASELINE RD BUCKEYE 85326
504-51-052	PEREZ DOMINGO/MARILYN L	410 E BASELINE RD BUCKEYE 85326
504-51-053	GRIJALVA HECTOR/GLORIA Y	414 E BASELINE RD BUCKEYE 85326
504-51-054	CY DESERT LAND LLC	
504-51-055	LOPEZ JUAN MANUEL REYNAGA/AGUILAR ELISA DEL ROSARIO	
504-51-056	DEL ROSARIO AGUILAR ELISA/REYNAGA LOPEZ JUAN MANUEL	408 E BASELINE RD BUCKEYE 85326
504-51-057	PEREZ DOMINGO/MARILYN L	410 E BASELINE RD BUCKEYE 85326
504-51-058	GRIJALVA HECTOR/GLORIA Y	414 E BASELINE RD BUCKEYE 85326
504-51-059	DOMINGUEZ BLANCA G	406 E BASELINE RD BUCKEYE 85326
504-51-060	CARRILLO CIPRIANO/MARIA GUADALUPE	7232 E 4TH AVE BUCKEYE 85326
504-51-061	MONTES ALEJANDRO	305 4TH AVE E BUCKEYE 85326
504-51-067	PEREZ HECTOR ASTORGA/ROSALINA	306 3RD AVE E BUCKEYE 85326
504-51-068	GONZALEZ DAIAN/MEZA GUADALUPE	308 3RD AVE E BUCKEYE 85326
504-51-084	ARELLANO SALVADOR MARQUEZ JR	514 E BASELINE RD BUCKEYE 85326
504-51-085A	GRIJALVA CYNTHIA E	516 E BASELINE RD BUCKEYE 85326
504-54-043	MAYA CONCEPCION M	309 E BASELINE RD BUCKEYE 85326
504-54-044	MAYA CONCEPCION M	309 E BASELINE RD BUCKEYE 85326
504-54-045	UM KONGKEASEILA	215 E BASELINE RD BUCKEYE 85326
504-54-046A	TRUE HOLINESS CHURCH OF GOD IN CHRIST	317 E BASELINE RD BUCKEYE 85326
504-54-048	MAYA CONCEPCION M	309 E BASELINE RD BUCKEYE 85326
504-54-049	LAMBARO JOY	215 E BASELINE RD BUCKEYE 85326
504-54-050	UM KONGKEASEILA	215 E BASELINE RD BUCKEYE 85326
504-54-051	ESPINOZA GABINO HERIBERTO REYES/GUERRERO MATLINDA	407 3RD AVE E BUCKEYE 85326
504-54-052	HOLLIGAN BILLY GENE & MARY JANE	409 3RD AVE E BUCKEYE 85326
504-54-053	HOLLIGAN BILLY GENE/MARY JANE	409 3RD AVE E BUCKEYE 85326
504-54-054	HOLLIGAN BILL GENE/MARY J	411 3RD AVE E BUCKEYE 85326
504-54-055	PEINADO INVESTMENTS LLC	
504-54-058	MESQUIAS VICTOR J	410 2ND AVE E BUCKEYE 85326
504-54-059	G DOMINNGO PEREZ	408 2ND AVE E BUCKEYE 85326
504-54-060	RUIZ MARIO SAMUEL IMPERIAL	408 2ND AVE E BUCKEYE 85326
504-54-134A	DICKERSON BILLY JOE/BILLY J JR/JUDY KAY/WENDELL RAY/CRAFT MARGIE SUE/NARRAMORE SHELLY MARIE	308 E BASELINE RD BUCKEYE 85326
504-54-135A	MEZA RICARDO/ISABEL	310 E BASELINE RD BUCKEYE 85326
504-54-136A	LAJOIE JEREMY	320 E BASELINE RD BUCKEYE 85326
504-54-142A	MARTINEZ ELIAS	307 3RD AVE E BUCKEYE 85326


MARICOPA COUNTY
ASSESSOR'S OFFICE
Home
FAQ
Contact Us
Help
Version 3.5
Feature Information
(1 of 1)
Clear
504-51-006
Owner Information
Owner Name: GERSTEN BRIAN
In Care Of:
Property Address: 305 E BROADWAY RD BUCKEYE 85326
Mailing Address: 131 S TEMPLE ST MESA AZ USA 85204
Deed Number: 20230617400
Sale Date: 12/01/2023
Sale Price: $35000
Property Information
Lat/Long: 33.379097 , -112.580599
S/T/R: 32 1N 3W
Jurisdiction: BUCKEYE
PUC: 0012
Lot Size (sq ft): 3,240
MCR #: 21-44
Subdivision: VALENCIA
Lot #: 2B
Tract/Block: /10
Floor: 1
Construction Year:
Living Space (sq ft):
Valuation Information
Tax Year: 2025 2024
FCV: $ 25,600 $ 28,000
LPV: $ 6,029 $ 5,742
Legal Class: 2.R 2.R
Zoom to
Address or Intersection
VALENCIA
MCR: 021-44
N DENIZA BLVD
E Garces St
E Kino Pl
N Denza Blvd E
2nd Ave E
E BASELINE RD
N Central Blvd
1St Ave E
3Rd Ave E
2Nd Ave E
E Coronado St
Ord # INCORPORATION
5/8/1929
228 ARIZONA
200ft
-112.583974 33.380848 Degrees
Search By
Using the Mouse
What I Know
Buffer
Results
Features selected: 53
504-51-001C
Owner: PENTECOSTAL CHURCH OF GOD
Property Address: 301 E BASELINE RD BUCKEYE 85326
Mailing Address: PO BOX 48498 PHOENIX AZ USA 85075
Latitude: 33.379096321591
Longitude: -112.580821369983
504-51-002
Owner: PENTECOSTAL CHURCH OF GOD
Property Address: 301 E BASELINE RD BUCKEYE 85326
Mailing Address: PO BOX 48498 PHOENIX AZ USA 85075
Latitude: 33.3790969390186
Longitude: -112.58068785747

3R PLZZ-24-0007 RECEIVED OCT 07 2024 AL

Legal Description

For

Rezoning – Application PLZZ-24-0007

THE LAND REFERRED TO HEREIN BELOW IS SITUATED IN THE COUNTY OF MARICOPA, STATE OF ARIZONA, AND IS DESCRIBED AS FOLLOWS:

Lot 2B, Block 10, of VALENCIA, according to the plat of record in the Office of the County Recorder of Maricopa County, Arizona, recorded in Book 21 of maps, Page 44.

The above described parcel containing approximately 3,240 square feet, more or less.



5TH AVE E

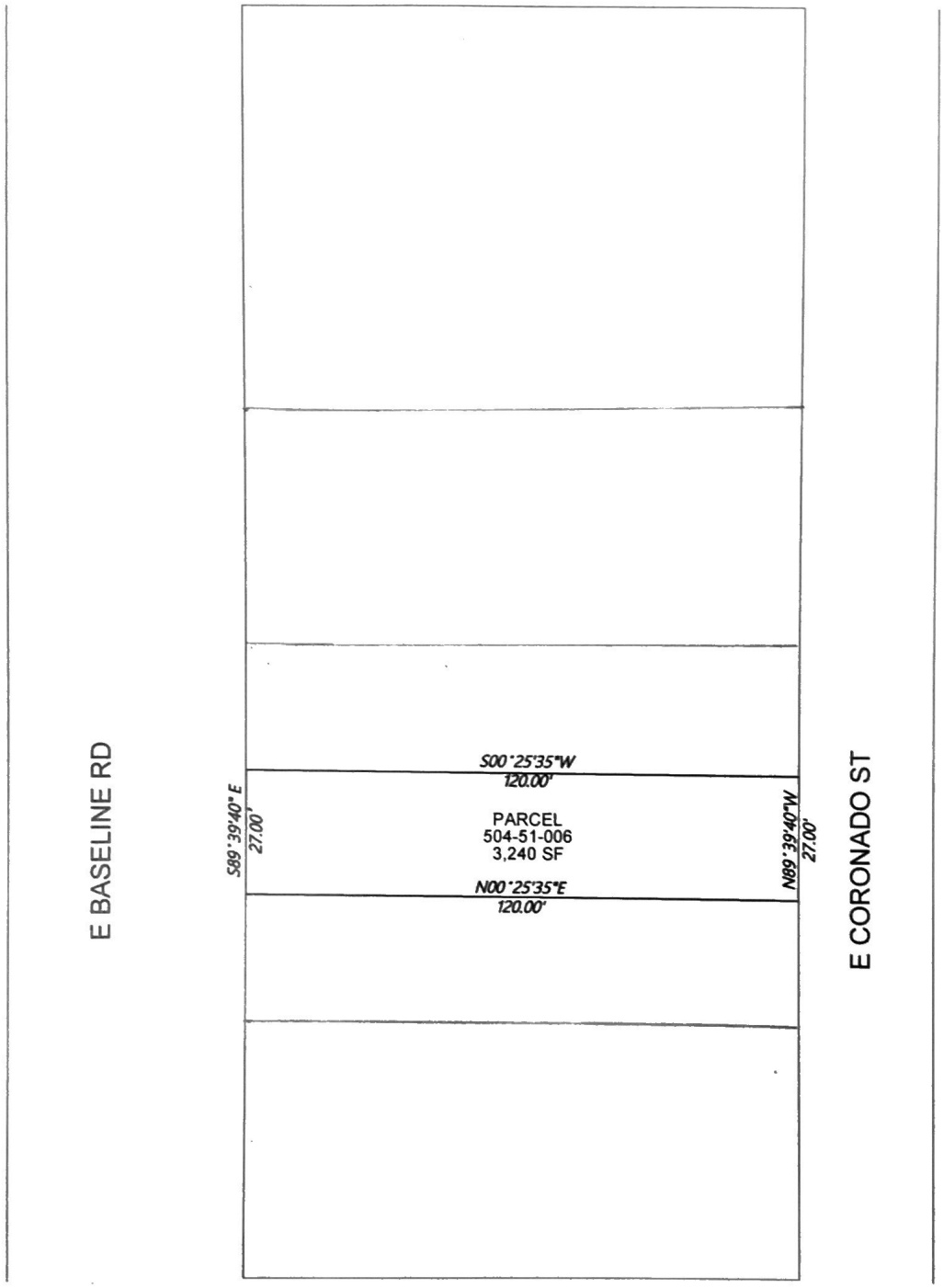

4TH AVE E

REGISTERED LAND SURVEYOR
CERTIFICATE NO.
10846
DENNIS FRANK
KEOGH
DATE SIGNED 9/6/21
ARIZONA U.S.A.
EXPIRES 6-30-2021

PARCEL EXHIBIT

WHEN RECORDED, RETURN TO:

City of Buckeye
ATTN: City Clerk, Lucinda J. Aja
530 East Monroe Avenue
Buckeye, Arizona 85326

ORDINANCE NO. 27-24

AN ORDINANCE OF THE MAYOR AND CITY COUNCIL OF THE CITY OF BUCKEYE, ARIZONA, AMENDING THE ZONING MAP OF THE CITY OF BUCKEYE FOR APPROXIMATELY .07 ACRES OF LAND LOCATED APPROXIMATELY AT THE SOUTHEAST CORNER OF BASELINE ROAD AND EAST 3RD AVENUE FROM SPECIAL USE (SU) TO DOWNTOWN RESIDENTIAL (DR).

WHEREAS, by adoption of this Ordinance, the City Council desires to amend the Zoning Map of the City of Buckeye by changing the zoning of approximately .07 acres of land located approximately at the southeast corner of Baseline Road and East 3rd Avenue from Special Use (SU) to Downtown Residential (DR); and

WHEREAS, all required notices of the public hearings scheduled on this zoning request were provided pursuant to the Development Code of the City of Buckeye and State law; and

WHEREAS, the City of Buckeye Planning & Zoning Commission held a public hearing on November 26, 2024, and recommended approval of this zoning change subject to conditions; and

WHEREAS, in accordance with Article II, Sections 1 and 2 of the Constitution of Arizona, the Council has considered the individual property rights and personal liberties of the residents of the City before adopting this ordinance; and

WHEREAS, the recommended zoning changes are in conformity with the General Plan.

NOW THEREFORE BE IT ORDAINED, by the Mayor and City Council of the City of Buckeye, Arizona, as follows:

Section 1. The foregoing recitals are incorporated as if fully set forth herein.

Section 2. The Zoning Map of the City of Buckeye is hereby amended by changing approximately .07 acres of land, as legally described and depicted in **Exhibit A** attached hereto and incorporated herein by reference, (the "Property") from Special Use (SU) to Downtown Residential (DR).

Section 3. All present and future owners of the Property shall develop the Property in accordance with conditions (a) through (i), as set forth in **Exhibit B** attached hereto.

Section 4. The Mayor, the City Manager, the City Attorney, and City Clerk are hereby authorized and directed to take all steps and execute all documents necessary to carry out the purpose and intent of this Ordinance.

PASSED AND ADOPTED by the Mayor and City Council of the City of Buckeye, Arizona, this 17th day of December, 2024.

_____
Eric W. Orsborn, Mayor

ATTEST:

_____
Lucinda J. Aja, City Clerk

APPROVED AS TO FORM:

_____
K. Scott McCoy, City Attorney

EXHIBIT A

Legal Description and Depiction of the Land

(Consisting of 2 pages)

EXHIBIT B

Conditions of Approval

Planning Division Conditions – Standard/General

a) The property owner/s and their successor waive any and all claims for diminution in value of the property with regard to any action taken by City of Buckeye as result of this approval.

Fire Department Conditions – Standard/General

b) The Buckeye Fire Chief and City Engineer shall determine the number, location, and types of all fire hydrants.

c) Prior to delivery of any combustible materials to the site, a fire protection system approved by the Buckeye Fire Marshal shall be completely operational.

d) All buildings shall be equipped with a fire protection system as required by City of Buckeye Ordinance 03-22.

e) Where two fire apparatus access roads are required, they shall be placed a distance apart equal to not less than one half of the length of the maximum overall diagonal dimension of the lot or area to be served, measured in a straight line between accesses.

Public Works Conditions – Standard/General

f) All landscaped areas within the public rights of way shall be designed and sealed by a landscape architect licensed by the Arizona Board of Technical Registration. The City Public Works Department shall review all irrigation plans for material selection only; therefore, the landscape architect shall coordinate with the Public Works Department early in the design to ensure the most efficient means of landscape irrigation that will reduce both long term maintenance costs and keep watering to the absolute minimum required for healthy growth of landscaping along the roadways of the City of Buckeye.

g) No new natural turf shall be installed in a public right-of-way or median. Areas with up to 10,000 square feet of turf within a public right-of-way at gateways, entrances to major communities, or special landscaping designs approved by the city's development services department are exempt from the restrictions of this stipulation.

h) Plant material within the right-of-way shall not obstruct any regulatory signage or sight distance triangle as defined in the Engineering Development Standards.

i) The following trees are prohibited from any landscaping plans in accordance with Chapter 9 of City Code (Section 9-10): Male Mulberry Tree (Morus Alba), Olive Tree (Olea Europea). Additionally, North Indian Rosewood Trees (Dalbergia Sissoo) shall not be planted within the rights of way (and are suggested not being planted within the property) due to their destructive and invasive root structure.

j) Storm Drainage: The City of Buckeye is permitted as a Phase 2 MS4 and is now subject to more stringent standards for stormwater discharge. All stormwater plans must now meet the requirements of the City of Buckeye's MS4 permit as issued by ADEQ (Permit Number AZG2016-002).

305 E Baseline Road Rezone

PLZZ-24-0007

City Council – December 17, 2024

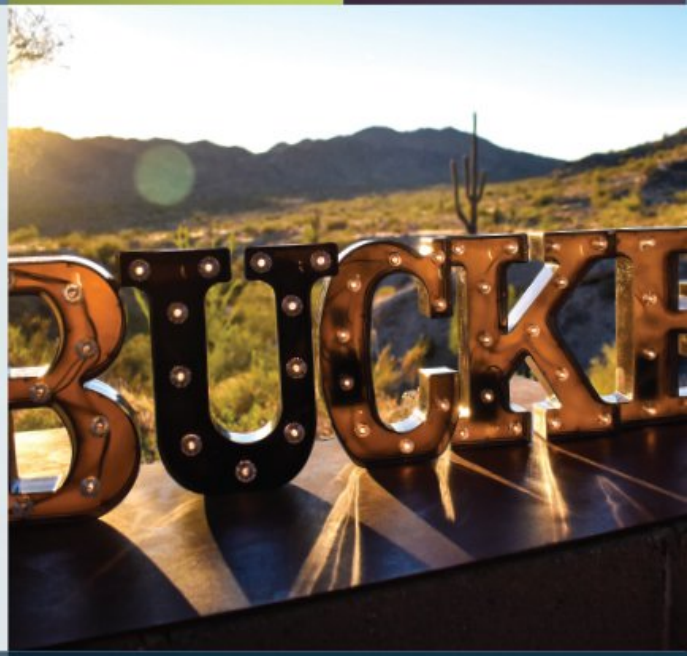

BUCKEYE, AZ

buckeyeaz.gov

Project Overview

- Applicant: Brian Gersten
- Location: Southeast corner of Baseline Road and East 3rd Avenue
- Request: Rezone from Special Use (SU) to Downtown Residential (DR)
- Size: .07 acres

Site Context

- Subject Property: Vacant
- North: Single Family Residence
- South: Single Family Residence
- East: Vacant
- West: Refuge Church

EXHIBIT A



VICINITY MAP

PLZZ-24-0007
305 E Baseline Road Rezone
City Council District #1

BUCKEYE, AZ

General Plan

- Land Use: Activity Center
- Specific Area Plan, “The Downtown Buckeye Specific Area Plan”
  - Proposed use and zoning is consistent with the vision of The Downtown Buckeye Specific Area Plan

EXHIBIT D

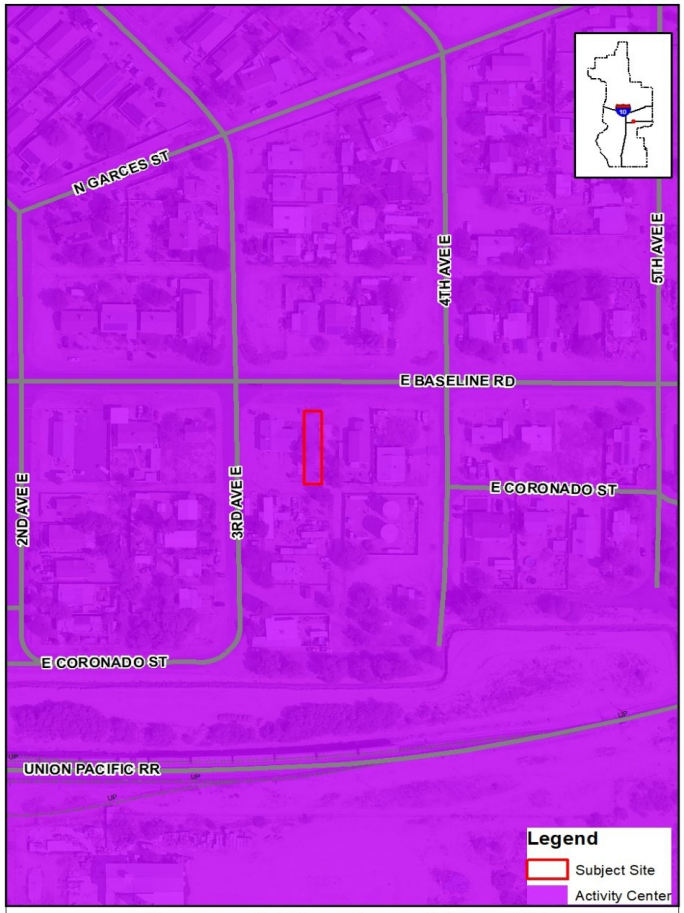

General Plan Land Use Map

PLZZ-24-0007
305 E Baseline Road Rezone
City Council District #1

BUCKEYE, AZ

Zoning

- Existing Zoning: Special Use (SU)
- Proposed Zoning: Downtown Residential (DR)

EXHIBIT C

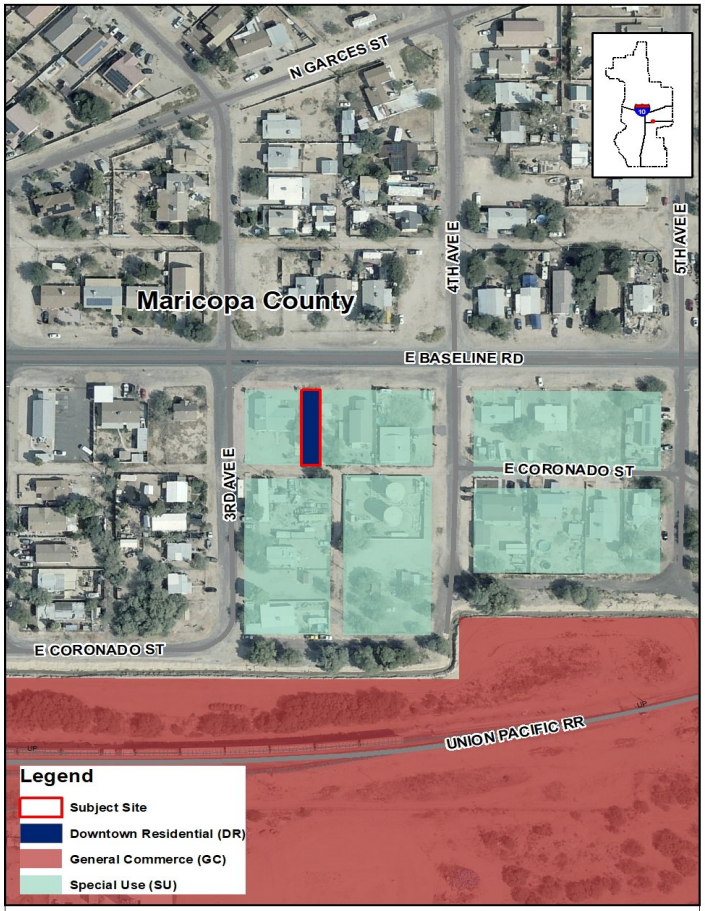

Proposed Zoning Map

BUCKEYE, AZ

PLZZ-24-0007
305 E Baseline Road Rezone
City Council District #1

Public Participation

- Neighborhood meeting: June 21, 2024 at 12 PM, held at Buckeye Public Library – Coyote Branch. 2nd neighborhood meeting October 1, 2024 at 6 PM on a Zoom meeting.
- Legal Notice: November 6, 2024
- Site Posting: November 7, 2024
- Mailing Notice: November 7, 2024
- No public comments received to date



Future Development & Emergency Services

- Pending Building Permit review for a residential duplex development
- Property will receive City services with exception of sewer; on-site septic to be provided due to lack of City sewer in this area

Recommendation

- Conduct a public hearing
- Adopt Ordinance No. 27-24 approving PLZZ-24-0007, subject to conditions a) through i), for the following reasons:
  - ✓Furthers goals of the Buckeye General Plan and contributes to a vibrant Historic Downtown Buckeye Activity Center (aka The Buckeye Downtown Specific Area Plan) with residential density appropriate to an Activity Center
  - ✓Conforms to the Buckeye Development Code
  - ✓No outstanding issues from reviewing departments

CITY OF BUCKEYE
Regular Council Meeting
COUNCIL ACTION REPORT

MEETING DATE: 12/17/24	**AGENDA ITEM:** 6.B. DS - PH - Development Code Amendment - Determination of Administrative Completeness of Rezoning Applications
DATE PREPARED: 12/17/24	**DISTRICT NO.:**
STAFF LIAISON: Mandy Woods, Senior Planner, swoods@buckeyeaz.gov, (623) 640-6093	
DEPARTMENT: Development Services	**AGENDA ITEM TYPE:** Public Hearing and Non Consent - New Business Items

ACTION/MOTION: (This language identifies the formal motion to be made by the Council)
Council to hold a public hearing and take action on Ordinance No. 30-24 declaring as a public record that certain document on file with the City Clerk entitled the "City of Buckeye December 2024 Development Code Article 8 Update;" adopting the same by reference; amending Chapter 7, Development Code, Article 8, Review and Approval Procedures, as set forth in the "City of Buckeye December 2024 Development Code Article 8 Update;" providing for repeal of conflicting ordinances and provisions; and providing for severability.

SUMMARY

PROJECT DESCRIPTION:
On April 23, 2024, the Governor of Arizona signed Senate Bill 1162, amending the Arizona Revised Statutes to add Section 9-462.10, renumbered to 9-462.11. The legislation requires municipalities to adopt an amendment to their zoning ordinances adding language addressing administrative completeness of residential rezoning applications. Cities are required to comply with the statute by amending their respective codes by no later than January 1, 2025.

The key points of the legislation include:

- Within 30 days of receiving a rezoning application, a municipality must determine if the application is administratively complete (e.g. all specified required items have been provided by the applicant).
- For resubmittals, the municipality must determine administrative completeness within 15 days.
- The rezoning application must be approved or denied within 180 days of the initial determination of administrative completeness. The municipality may extend this timeframe once (not more than 30 days), and the applicant may also request extensions of 30 days per extension.

Currently, the Planning Division follows a very similar procedure for application completeness on all entitlement applications. As such, staff does not anticipate significant procedural changes resulting from this required code amendment. Nonetheless, to comply with this change in state statute, staff recommends adopting the attached modifications to Sections 8.2 and 8.5 of the Buckeye Development Code. For the sake of simplicity, the proposed language will apply to both nonresidential and residential rezonings (with exceptions as noted in the attachment and allowed per statute). This amendment is being considered ahead of the ongoing Phase 2 of the Development Code update due to the time constraint required by state statute.

On November 26th, 2024, the Planning & Zoning Commission held a public hearing and recommended approval of this item to the Mayor and City Council. There were no speakers during the Planning & Zoning Commission public hearing for this item. No public comment concerning this request has been received to date.

BENEFITS:
The proposed amendments are intended to ensure compliance of the City's Development Code with SB1162.

FINANCIAL IMPACT STATEMENT:
See Planning Items Financial Impact Statement.

FINANCIAL IMPACT STATEMENT:
Although a fiscal impact analysis has not been conducted on this specific project, all new development will have an ongoing fiscal impact on the city. The development is responsible for construction of all infrastructure necessary to serve the site and will generate one-time revenue for the city such as permit fees, construction sales tax and development impact fees. Longer term fiscal impacts include increased demands for municipal services, the costs of which may or may not be offset by increased property values/tax levies, city sales tax, state shared revenues and the increased demand for commercial and retail development. Any areas that will be maintained by the city are constructed by the developer and then conveyed to the city two years after construction.

Items related to a project or facility location must include an attached vicinity map for Council Review.
ATTACHMENTS:
City of Buckeye December 2024 Development Code Article 8 Update
City of Buckeye December 2024 Development Code Article 8 Update.legislative
PLZM-24-0107 - Admin Completeness DCA PPT 12-17-24.pptx
Ordinance No. 30-24 Development Code Article 8.docx

8.2. COMMON DEVELOPMENT REVIEW PROCEDURES

The common development review procedures in Section 8.2 shall apply to development applications under Article 8, unless an exception to the common procedures is expressly identified.

8.2.1. **Step 1: Pre-Application Conference.**

A. **Purpose.** The purpose of a pre-application conference is to provide an opportunity for an informal evaluation of the applicant's proposal and to familiarize the applicant with the applicable provisions of this Development Code, the City's General Plan, infrastructure requirements, and any other issues that may affect the applicant's proposal.

B. **Applicability.**

1. **Required for Certain Applications.** A pre-application conference is required prior to the following types of applications, unless otherwise waived by the Director or their designee:

   a. Amendment to the General Plan;

   b. Amendment to the Zoning Map (rezonings);

   c. Community Master or Planned Area Development plan;

   d. Single-Family Flex;

   e. Conditional Use Permit; and

   f. Subdivision: preliminary plat.

   The pre-application conference must take place prior to any substantial investment, such as detailed site and engineering design.

2. **Optional for All Other Applications.** A pre-application conference is optional prior to submission of any other application under this Development Code not listed above.

C. **Initiation of Pre-Application Conference.** The potential applicant shall request in writing a pre-application conference with the Director or their designee and pay the required fees. With the request for a pre-application conference, the applicant shall provide to the Director or their designee a description of the character, location, and magnitude of the proposed development and any other available supporting materials, such as maps, drawings, or models. It is the applicant's responsibility to provide sufficiently detailed plans and descriptions of the proposal for staff to make the informal recommendations discussed below. The materials should be submitted at least ten business days before the conference.

D. **Pre-Application Conference Content.** The Director or their designee shall schedule a pre-application conference after staff verify a complete application submittal. At the conference, the applicant, city staff, and any other persons the Director or their designee deems appropriate to attend, shall discuss the proposed development. Based upon the information provided by the applicant the parties will discuss in general the proposed development, the applicable requirements and standards of adopted codes and ordinances, and conditions that may need to be addressed.

E. **Comments From Pre-Application Conference.** Development services department staff shall forward all comments received to the applicant within ten business days of the conference.

F. **Informal Evaluation Not Binding.** The pre-application review and feedback notes serve only as a guide to the applicant in making the application and to advise the applicant in advance of the formal application of issues that may be present and need to be addressed.

G. **Waiver.** The Director or their designee may waive the pre-application conference requirement for applications if he or she finds that the projected size, complexity, anticipated impacts, or other factors associated with the proposed development clearly, in his or her opinion, support such waiver.

H. **Application Required Within One Year.** After a pre-application conference has been completed, the associated application must be completed within one year, or sooner if required by the Director or their designee due to changing conditions. If an application is not filed within such time frame, a new pre-application conference may be required prior to filing an application.

8.2.2. **Step 2: Neighborhood Meeting.**

A. **Purpose.** The purpose of a neighborhood meeting is to provide an opportunity to inform the residents and landowners of the surrounding neighborhood(s) of the details of a proposed development and application, how the applicant intends to meet the standards contained in this Development Code, and to receive public comment and encourage dialogue at an early time in the review process. No decision regarding the application will be made at the neighborhood meeting.

B. **Applicability.** A neighborhood meeting is recommended for any development proposal that will be subject to Planning and Zoning Commission review. The neighborhood meeting is optional unless expressly stated otherwise in this Article 8 or required by the Director or their designee.

C. **Notice of Neighborhood Meeting.** The applicant shall notify the Development Services Department in writing of the meeting date, time, and location no less than 14 days prior to the scheduled date of the meeting, if the meeting was required to be held by the Director or their designee or this Development Code. An affidavit certifying that the applicant completed the notice procedures under step 6 shall be included with the development application submittal.

D. **Attendance at Neighborhood Meeting.** The applicant shall be responsible for scheduling the meeting, coordinating the meeting, and for retaining an independent facilitator if needed.

E. **Summary of Neighborhood Meeting.** The applicant shall prepare and deliver a written summary of the neighborhood meeting to the Development Services Department within 30 days of the date of the meeting.

8.2.3. **Step 3: Development Application Submittal.**

A. **Form of Application.** Applications required under this article shall be submitted in a form and in such number as required by the Director or their designee.

B. **Consolidated Development Applications and Review.** Multiple development applications for the same development proposal may be consolidated for submittal and review, if authorized by the Director or their designee.

C. **Authority to File Applications.**

1. Unless otherwise specified in this Development Code, applications for review and approval may be initiated by:

    a. The owner of the property that is the subject of the application;

    b. The owner's authorized agent; or

    c. Any review or decision-making body.

2. When an authorized agent files an application under this Development Code on behalf of a property owner, the agent shall provide the Development Services Department with written documentation that the owner of the property has authorized the filing of the application.

D. **Development Review Fees.**

1. **Recovery of Costs.** The applicable development review fees shall be paid at the time of submittal of any development application.

2. **Development Review Fee Schedule.** The amount of the city's development review fees shall be established by the City Council and shall be based on the actual expenses incurred by or on behalf of the city.

E. **Waivers.** The Director or their designee may waive submittal requirements where he or she finds that the projected size, complexity, anticipated impacts, or other factors associated with the proposed development clearly, in his or her opinion, support such waiver.

F. **Additional Information.** Additional application-specific information, beyond that specified in the application packet, may be required as necessary and appropriate to evaluate fully whether an application complies with the requirements of adopted codes and ordinances.

G. **Citizen Participation Plan.**

1. Every application that requires a neighborhood meeting shall include a Citizen Participation Plan that must be implemented prior to the first public hearing. Refer to the Citizen Participation Plan for an explanation of the purpose and more detailed information.

2. The Citizen Participation Plan is not intended to produce complete consensus on all applications, but to encourage applicants to be good neighbors and to allow for informed decision making.

3. The Citizen Participation Plan shall be submitted with the project application.

These requirements apply in addition to any notice provision required elsewhere in this Development Code.

3. Failure of any person or entity to receive notice shall not constitute grounds for any court to invalidate the actions of the municipality for which the notice was given.

4. Submittal of a Citizen Participation Plan shall not occur until after the required pre-application meeting and consultation with the Planning Department staff. Applicants are encouraged to engage in early communication with the public.

H. **Citizen Participation Report.** This section applies only when a Citizen Participation Plan is required by this Development Code.

The applicant shall provide a written report on the result of their citizen participation effort prior to the notice of public hearing. This report will be attached to the Planning Department's Staff Report.

8.2.4. **Step 4: Determination of Application Administrative Completeness.**

A. After receipt of the required development application materials, the Director shall determine whether the application is administratively complete and ready for review. For rezoning applications (Section 8.5. *Amendments to the Zoning Map (Rezonings),* the Director shall determine whether a zoning application is administratively complete within 30 days after receiving the application.

B. If the application is determined to be administratively complete, the application shall then be processed according to the procedures set forth in this Development Code.

C. If an application is determined to be administratively incomplete, the Director shall provide notice to the applicant with a comprehensive list of the specific deficiencies in writing or electronically. No further processing of an incomplete application shall occur until the deficiencies are corrected in a resubmittal.

D. The Director shall determine if a re-submitted application is administratively complete within 15 days of resubmittal. The Director shall follow the procedures prescribed in A.R.S. § 9-853.E. until the incomplete application is deemed to be administratively completed.

E. If any false or misleading information is submitted or supplied by an applicant on an application, that application will be deemed void and a new application must be submitted.

8.2.5. **Step 5: Application Review.** After determining that a development application is administratively complete, the Director shall refer the development application to the appropriate review agencies and planning staff, substantively review the development application, and shall act upon the application to approve, approve with conditions, or deny the development application. Conditions for approval may be recommended to eliminate any areas of noncompliance or mitigate any adverse effects of the development proposal.

8.2.6. **Step 6: Notice.**

A. **Content of Notices.** Notice of all public hearings required under this article shall, unless otherwise specified in this Development Code: (1) identify the date, time, and place of the public hearing; (2) if applicable, describe the property involved in the application by street address, or legal description, or a general description and nearest cross streets; (3) describe the nature, scope, and purpose of the proposed action; (4) indicate that interested parties may appear at the hearing and speak on the matter; and (5) indicate where additional information on the matter may be obtained. If the matter to be considered applies to territory in a high noise or accident potential zone as defined under state law, the notice shall include a general statement that the matter applies to property located in such an area.

B. **Summary of Notice Requirements.** The following Table 8.2-1 summarizes the notice requirements of the procedures in this article.

TABLE 8.2-1: NOTICE REQUIREMENTS

✓ = Notice Required

Type of Application or Procedure	Section	Mailed	Published	Posted	Neighborhood Meeting
Amendment to General Plan/Specific Area Plan	8.3.	✓	✓	✓	✓
Amendment to Text of Development Code	8.4.	Mailed notice only required if covered by 8.2.6 D.2	✓		
Amendment to Zoning Map (Rezoning)	8.5.	✓	✓	✓	✓
Community Master Plan (CMP) and Planned Area Development (PAD)	8.6.	✓	✓	✓	✓
Conditional Use Permit	8.7.	✓	✓	✓	✓
Minor Subdivision	8.8.6.				
Subdivision: Preliminary Plat	8.8.7.	✓			
Subdivision: Final Plat	8.8.8.				
Final Plat Re-Plat	8.8.9				
Map of Dedication	8.8.10				
Site Plan: Administrative Review	8.9.3.				

Site Plan: Planning Commission Review	8.9.4.				
Temporary Use Permit	8.10.				
Variance	8.11.	✓[1]	✓	✓	
Appeal of Administrative Decisions	8.13.		✓	✓	
Annexation	8.16		✓	✓	
NOTE: 1 Variances require a mailed notice to surrounding property owners within 150 feet of the subject property.					

C. **Mailed Notice.** When Table 8.2-1 requires that mailed notice be provided, the applicant shall provide the Director or their designee with a current list of applicable property owners and organizations as listed below. The applicant shall deposit notices into first-class mail at least 15 days prior to the scheduled date of the hearing. Written notice shall be provided by the applicant to all persons listed on the records of the county assessor as owners of land subject to the application or as owners of the parcels within 300 feet of the outer boundary of the land subject to the application. For any rezoning of an area greater than 20 acres, General Plan Amendments, and CMPs or PADs, the 300-foot requirement shall be 500 feet. The applicant shall provide a written "Affidavit of Mailing" to the Development Services Department certifying that all required notices were timely mailed.

D. **Published Notice.**

1. If published notice is required by Table 8.2-1, the applicant shall publish notice in a newspaper of general circulation in the area. The notice shall be published at least 15, but no more than 45, days before the scheduled hearing date. An affidavit of publication provided by the newspaper shall be obtained by the applicant and given to the Development Services Department for their records.

2. If any application, proposed amendment, or proposed Minor Modification involves one or more of the following proposed changes or related series of changes:

   a. A ten percent or more increase or decrease in the number of square feet or units that may be developed;

   b. A ten percent or more increase or reduction in the allowable height of buildings;

   c. An increase or reduction in the allowable number of stories of buildings;

   d. A ten percent or more increase or decrease in setback or open space requirements; and/or

   e. An increase or reduction in permitted uses.

3. The city shall provide notice in accordance with A.R.S. § 9-462.04 via one of the following methods, as per the Director's or their designee's discretion:

   a. Notice shall be sent by first class mail to each real property, as shown on the last assessment, whose real property is directly governed by the changes, or;

   b. Notices shall be included as inserts within utility bills or other mass mailings that periodically include notices or other informational or advertising materials, or;

   c. The city shall publish such changes prior to the first hearing on such changes in a newspaper of general circulation in the city. The changes shall be published in a "display ad" covering not less than one-eighth of a full page.

E. **Posted Notice.** Posted notice, if required by Table 8.2-1, shall be provided in the following manner: there shall be posting of at least two signs on the lot, parcel, or tract of land that is the subject of the application or proposed action by the city, and such signs shall remain on the property for a period of at least 15 days prior to the public hearing. All signs shall be removed no later than ten days after the expiration of the above period. The applicant shall maintain the sign in good condition throughout the required posting period. The sign shall be posted in a prominent place, clearly visible from a major arterial street if the property abuts such an arterial street, or clearly visible from a collector street if the property abuts a collector street, or clearly visible to the most heavily traveled street or public way if the property does not abut an arterial or collector street.

F. **Constructive Notice.** Minor defects in any notice shall not impair the notice or invalidate proceedings pursuant to the notice if a bona fide attempt has been made to comply with applicable notice requirements. Minor defects in notice shall be limited to errors in a legal description or typographical or grammatical errors that do not impede communication of the notice to affected parties.

8.2.7. **Step 7: Decision and Findings.**

A. **Decision.** After consideration of the application, the staff report, comments received from other reviewers (if applicable), and the evidence from the public hearing (if applicable), the decision-maker shall approve, approve with conditions, or deny the application based on its compliance with the applicable approval criteria. Written notification of the decision shall be provided by the Director or their designee to the applicant.

8.2.8. **Step 8: Conditions of Approval.** The decision-maker may impose such conditions on the approval of the application as may be necessary to reduce or minimize any potential adverse impact upon other property in the area, or to carry out the purpose and intent of the General Plan and this Development Code. No conditions of approval, except for those attached to Variances or Minor Modification approvals, shall be less restrictive than the requirements of this Development Code.

8.2.9. **Step 9: Lapse.** If applicable, the lapse of approval time frames established by the procedures of this Development Code may be extended only when all of the following conditions exist:

A. The provisions of this Development Code must expressly allow the extension;

B. An extension request must be filed prior to the applicable lapse-of-approval deadline;

C. The extension request must be in writing and include justification; and

D. Unless otherwise noted, authority to grant extensions of time shall rest with the decision-making body that granted the original approval (the one being extended).

(Ord. No. 37-09, § 1, 12-16-2009; Ord. No. 14-14, § 1, 12-2-2014; Ord. No. 03-15, § 2(Att.), 3-17-2015; Ord. No. 19-15, § 2(Att.), 12-1-2015; Ord. No. 07-22, § 3 (PLZM-21-0060), 4-19-2022; Ord. No. 01-24, § 3(Exh. A, B), 2-20-2024)

8.5. AMENDMENTS TO THE ZONING MAP (REZONINGS)

8.5.1. **Purpose.** The boundaries of any zoning district may be changed or the zoning classification of any parcel of land may be changed pursuant to this section. The purpose is not to relieve particular hardships, nor to confer special privileges or rights on any person, but only to make adjustments to the Official Zoning Map that are necessary in light of changed conditions or changes in public policy, or that are necessary to advance the general welfare of the city. Rezonings should not be used when a Conditional Use Permit, Variance, or Minor Modification could be used to achieve the same result.

8.5.2. **Procedure.** The common development review procedures of Section 8.2 shall apply, with modifications as noted below.

A. **Public Hearings.** A public hearing shall be held by the Planning and Zoning Commission and City Council unless the Director or their designee determines otherwise.

B. **Decision and Findings.** The following additional procedures shall apply:

1. **Review and Recommendation by Planning and Zoning Commission.**

a. The Planning and Zoning Commission shall hold a public hearing on the proposed rezoning and vote to recommend that the City Council approve, approve with modifications, or deny the rezoning.

b. The Director or their designee shall forward the Planning and Zoning Commission's recommendation to the City Council with an ordinance to amend the Official Zoning Map in accordance with the recommendation.

2. **Action by City Council.**

a. The City Council shall approve or deny the application for a rezoning within 180 days of the determination that the application is administratively complete.

b. For extenuating circumstances, the Director may grant a onetime extension of not more than 30 days. If an applicant requests an extension, the Director may grant extensions of 30 days for each extension granted.

c. The City Council shall hold a hearing on the proposed rezoning and, within 90 days of the public hearing, approve with modifications, or deny the ordinance to amend the Zoning Map, or refer the application back to the Planning and Zoning Commission or to a committee of the City Council for further consideration.

d. The requirements of subsection 2.a and b. do not apply to land that is designated as a district of historical significance pursuant to A.R.S. § 9-462.01.A or an area that is designated as historic on the National Register of Historic Places or Planned Area Developments as described in Section 8.6.

3. **Protests.** If the owners of 20 percent of the property by area and number of lots, tracts and condominium units within the Zoning Area of the affected property file a protest in writing against a proposed rezoning, it shall not become effective except by the favorable vote of three-fourths of all members of the City Council. If any members of the City Council are unable to vote on such a question because of a conflict of interest, then the required number of votes for passage of the question shall be three-fourths of the remaining membership of the City Council, provided that such required number of votes shall in no event be less than a majority of the full membership of the City Council. For the purposes of this section, "Zoning Area" means both of the following: the area within 150 feet, including all rights-of-way, of the affected property subject to the proposed amendment or change, and; the area of the proposed amendment or change.

4. **Form of Amending Ordinance.** An ordinance amending the Zoning Map shall contain the following:

a. The name of each use district that the ordinance applies; and

b. The legal description of the land within each zoning district applied by the ordinance.

5. **Successive Applications.** Following denial of a Zoning Map amendment proposal, no new application for the same or substantially the same action shall be accepted within one year of the date of denial, unless denial is made without prejudice.

C. **Lapse.** The City Council may approve a rezoning conditioned upon a schedule for development of the specific use or uses for which rezoning is requested. If at the expiration of this period the property has not been improved for the use for which it was conditionally approved, the City Council, after

notification by certified mail to the owner and applicant who requested the rezoning, shall schedule a public hearing to take administrative action to extend, remove or determine compliance with the schedule for development or take legislative action to cause the property to revert to its former zoning classification.

(Ord. No. 37-09, § 1, 12-16-2009; Ord. No. 11-18, § 1, 8-7-2018; Ord. No. 01-24, § 3(Exh. A, B), 2-20-2024)

8.2. COMMON DEVELOPMENT REVIEW PROCEDURES

The common development review procedures in Section 8.2 shall apply to development applications under Article 8, unless an exception to the common procedures is expressly identified.

8.2.1. **Step 1: Pre-Application Conference.**

A. **Purpose.** The purpose of a pre-application conference is to provide an opportunity for an informal evaluation of the applicant's proposal and to familiarize the applicant with the applicable provisions of this Development Code, the City's General Plan, infrastructure requirements, and any other issues that may affect the applicant's proposal.

B. **Applicability.**

1. **Required for Certain Applications.** A pre-application conference is required prior to the following types of applications, unless otherwise waived by the Director or their designee:

   a. Amendment to the General Plan;

   b. Amendment to the Zoning Map (rezonings);

   c. Community Master or Planned Area Development plan;

   d. Single-Family Flex;

   e. Conditional Use Permit; and

   f. Subdivision: preliminary plat.

   The pre-application conference must take place prior to any substantial investment, such as detailed site and engineering design.

2. **Optional for All Other Applications.** A pre-application conference is optional prior to submission of any other application under this Development Code not listed above.

C. **Initiation of Pre-Application Conference.** The potential applicant shall request in writing a pre-application conference with the Director or their designee and pay the required fees. With the request for a pre-application conference, the applicant shall provide to the Director or their designee a description of the character, location, and magnitude of the proposed development and any other available supporting materials, such as maps, drawings, or models. It is the applicant's responsibility to provide sufficiently detailed plans and descriptions of the proposal for staff to make the informal recommendations discussed below. The materials should be submitted at least ten business days before the conference.

D. **Pre-Application Conference Content.** The Director or their designee shall schedule a pre-application conference after staff verify a complete application submittal. At the conference, the applicant, city staff, and any other persons the Director or their designee deems appropriate to attend, shall discuss the proposed development. Based upon the information provided by the applicant the parties will discuss in general the proposed development, the applicable requirements and standards of adopted codes and ordinances, and conditions that may need to be addressed.

E. **Comments From Pre-Application Conference.** Development services department staff shall forward all comments received to the applicant within ten business days of the conference.

F. **Informal Evaluation Not Binding.** The pre-application review and feedback notes serve only as a guide to the applicant in making the application and to advise the applicant in advance of the formal application of issues that may be present and need to be addressed.

G. **Waiver.** The Director or their designee may waive the pre-application conference requirement for applications if he or she finds that the projected size, complexity, anticipated impacts, or other factors associated with the proposed development clearly, in his or her opinion, support such waiver.

H. **Application Required Within One Year.** After a pre-application conference has been completed, the associated application must be completed within one year, or sooner if required by the Director or their designee due to changing conditions. If an application is not filed within such time frame, a new pre-application conference may be required prior to filing an application.

8.2.2. **Step 2: Neighborhood Meeting.**

A. **Purpose.** The purpose of a neighborhood meeting is to provide an opportunity to inform the residents and landowners of the surrounding neighborhood(s) of the details of a proposed development and application, how the applicant intends to meet the standards contained in this Development Code, and to receive public comment and encourage dialogue at an early time in the review process. No decision regarding the application will be made at the neighborhood meeting.

B. **Applicability.** A neighborhood meeting is recommended for any development proposal that will be subject to Planning and Zoning Commission review. The neighborhood meeting is optional unless expressly stated otherwise in this Article 8 or required by the Director or their designee.

C. **Notice of Neighborhood Meeting.** The applicant shall notify the Development Services Department in writing of the meeting date, time, and location no less than 14 days prior to the scheduled date of the meeting, if the meeting was required to be held by the Director or their designee or this Development Code. An affidavit certifying that the applicant completed the notice procedures under step 6 shall be included with the development application submittal.

D. **Attendance at Neighborhood Meeting.** The applicant shall be responsible for scheduling the meeting, coordinating the meeting, and for retaining an independent facilitator if needed.

E. **Summary of Neighborhood Meeting.** The applicant shall prepare and deliver a written summary of the neighborhood meeting to the Development Services Department within 30 days of the date of the meeting.

8.2.3. **Step 3: Development Application Submittal.**

A. **Form of Application.** Applications required under this article shall be submitted in a form and in such number as required by the Director or their designee.

B. **Consolidated Development Applications and Review.** Multiple development applications for the same development proposal may be consolidated for submittal and review, if authorized by the Director or their designee.

C. **Authority to File Applications.**

1. Unless otherwise specified in this Development Code, applications for review and approval may be initiated by:

    a. The owner of the property that is the subject of the application;

    b. The owner's authorized agent; or

    c. Any review or decision-making body.

2. When an authorized agent files an application under this Development Code on behalf of a property owner, the agent shall provide the Development Services Department with written documentation that the owner of the property has authorized the filing of the application.

D. **Development Review Fees.**

1. **Recovery of Costs.** The applicable development review fees shall be paid at the time of submittal of any development application.

2. **Development Review Fee Schedule.** The amount of the city's development review fees shall be established by the City Council and shall be based on the actual expenses incurred by or on behalf of the city.

E. **Waivers.** The Director or their designee may waive submittal requirements where he or she finds that the projected size, complexity, anticipated impacts, or other factors associated with the proposed development clearly, in his or her opinion, support such waiver.

F. **Additional Information.** Additional application-specific information, beyond that specified in the application packet, may be required as necessary and appropriate to evaluate fully whether an application complies with the requirements of adopted codes and ordinances.

G. **Citizen Participation Plan.**

1. Every application that requires a neighborhood meeting shall include a Citizen Participation Plan that must be implemented prior to the first public hearing. Refer to the Citizen Participation Plan for an explanation of the purpose and more detailed information.

2. The Citizen Participation Plan is not intended to produce complete consensus on all applications, but to encourage applicants to be good neighbors and to allow for informed decision making.

3. The Citizen Participation Plan shall be submitted with the project application.

These requirements apply in addition to any notice provision required elsewhere in this Development Code.

3. Failure of any person or entity to receive notice shall not constitute grounds for any court to invalidate the actions of the municipality for which the notice was given.

4. Submittal of a Citizen Participation Plan shall not occur until after the required pre-application meeting and consultation with the Planning Department staff. Applicants are encouraged to engage in early communication with the public.

H. **Citizen Participation Report.** This section applies only when a Citizen Participation Plan is required by this Development Code.

The applicant shall provide a written report on the result of their citizen participation effort prior to the notice of public hearing. This report will be attached to the Planning Department's Staff Report.

8.2.4. **Step 4: Determination of Application Administrative Completeness.**

A. After receipt of the required development application materials, the Director ~~or their designee~~ shall determine whether the application is administratively complete and ready for review. For rezoning applications (Section 8.5. *Amendments to the Zoning Map (Rezonings),* the Director shall determine whether a zoning application is administratively complete within 30 days after receiving the application.

B. If the application is determined to be administratively complete, the application shall then be processed according to the procedures set forth in this Development Code.

C. If an application is determined to be administratively incomplete, the Director ~~or their designee~~ shall provide notice to the applicant with a comprehensive list of the specific deficiencies in writing or electronically ~~along with an explanation of the application's deficiencies~~. No further processing of an incomplete application shall occur until the deficiencies are corrected in a resubmittal.

D. The Director shall determine if a re-submitted application is administratively complete within 15 days of resubmittal. The Director shall follow the procedures prescribed in A.R.S. § 9-853.E. until the incomplete application is deemed to be administratively completed.

~~D~~E. If any false or misleading information is submitted or supplied by an applicant on an application, that application will be deemed void and a new application must be submitted.

8.2.5. **Step 5: Application Review ~~and Report~~.** After determining that a development application is administratively complete, the Director ~~or their designee~~ shall refer the development application to the appropriate review agencies and planning staff, substantively review the development application, and shall act upon the application to approve, approve with conditions, or deny the development application. ~~and prepare a staff report.~~ Conditions for approval may be recommended to eliminate any areas of noncompliance or mitigate any adverse effects of the development proposal.

8.2.6. **Step 6: Notice.**

A. **Content of Notices.** Notice of all public hearings required under this article shall, unless otherwise specified in this Development Code: (1) identify the date, time, and place of the public hearing; (2) if applicable, describe the property involved in the application by street address, or legal description, or a general description and nearest cross streets; (3) describe the nature, scope, and purpose of the proposed action; (4) indicate that interested parties may appear at the hearing and speak on the matter; and (5) indicate where additional information on the matter may be obtained. If the matter to be considered applies to territory in a high noise or accident potential zone as defined under state law, the notice shall include a general statement that the matter applies to property located in such an area.

B. **Summary of Notice Requirements.** The following Table 8.2-1 summarizes the notice requirements of the procedures in this article.

TABLE 8.2-1: NOTICE REQUIREMENTS

✓ = Notice Required

Type of Application or Procedure	Section	Mailed	Published	Posted	Neighborhood Meeting
Amendment to General Plan/Specific Area Plan	8.3.	✓	✓	✓	✓
Amendment to Text of Development Code	8.4.	Mailed notice only required if covered by 8.2.6 D.2	✓		
Amendment to Zoning Map (Rezoning)	8.5.	✓	✓	✓	✓
Community Master Plan (CMP) and Planned Area Development (PAD)	8.6.	✓	✓	✓	✓
Conditional Use Permit	8.7.	✓	✓	✓	✓
Minor Subdivision	8.8.6.				
Subdivision: Preliminary Plat	8.8.7.	✓			
Subdivision: Final Plat	8.8.8.				
Final Plat Re-Plat	8.8.9				
Map of Dedication	8.8.10				
Site Plan: Administrative Review	8.9.3.				

Site Plan: Planning Commission Review	8.9.4.				
Temporary Use Permit	8.10.				
Variance	8.11.	✓[1]	✓	✓	
Appeal of Administrative Decisions	8.13.		✓	✓	
Annexation	8.16		✓	✓	
NOTE: 1 Variances require a mailed notice to surrounding property owners within 150 feet of the subject property.					

C. **Mailed Notice.** When Table 8.2-1 requires that mailed notice be provided, the applicant shall provide the Director or their designee with a current list of applicable property owners and organizations as listed below. The applicant shall deposit notices into first-class mail at least 15 days prior to the scheduled date of the hearing. Written notice shall be provided by the applicant to all persons listed on the records of the county assessor as owners of land subject to the application or as owners of the parcels within 300 feet of the outer boundary of the land subject to the application. For any rezoning of an area greater than 20 acres, General Plan Amendments, and CMPs or PADs, the 300-foot requirement shall be 500 feet. The applicant shall provide a written "Affidavit of Mailing" to the Development Services Department certifying that all required notices were timely mailed.

D. **Published Notice.**

1. If published notice is required by Table 8.2-1, the applicant shall publish notice in a newspaper of general circulation in the area. The notice shall be published at least 15, but no more than 45, days before the scheduled hearing date. An affidavit of publication provided by the newspaper shall be obtained by the applicant and given to the Development Services Department for their records.

2. If any application, proposed amendment, or proposed Minor Modification involves one or more of the following proposed changes or related series of changes:

   a. A ten percent or more increase or decrease in the number of square feet or units that may be developed;

   b. A ten percent or more increase or reduction in the allowable height of buildings;

   c. An increase or reduction in the allowable number of stories of buildings;

   d. A ten percent or more increase or decrease in setback or open space requirements; and/or

   e. An increase or reduction in permitted uses.

3. The city shall provide notice in accordance with A.R.S. § 9-462.04 via one of the following methods, as per the Director's or their designee's discretion:

   a. Notice shall be sent by first class mail to each real property, as shown on the last assessment, whose real property is directly governed by the changes, or;

   b. Notices shall be included as inserts within utility bills or other mass mailings that periodically include notices or other informational or advertising materials, or;

   c. The city shall publish such changes prior to the first hearing on such changes in a newspaper of general circulation in the city. The changes shall be published in a "display ad" covering not less than one-eighth of a full page.

E. **Posted Notice.** Posted notice, if required by Table 8.2-1, shall be provided in the following manner: there shall be posting of at least two signs on the lot, parcel, or tract of land that is the subject of the application or proposed action by the city, and such signs shall remain on the property for a period of at least 15 days prior to the public hearing. All signs shall be removed no later than ten days after the expiration of the above period. The applicant shall maintain the sign in good condition throughout the required posting period. The sign shall be posted in a prominent place, clearly visible from a major arterial street if the property abuts such an arterial street, or clearly visible from a collector street if the property abuts a collector street, or clearly visible to the most heavily traveled street or public way if the property does not abut an arterial or collector street.

F. **Constructive Notice.** Minor defects in any notice shall not impair the notice or invalidate proceedings pursuant to the notice if a bona fide attempt has been made to comply with applicable notice requirements. Minor defects in notice shall be limited to errors in a legal description or typographical or grammatical errors that do not impede communication of the notice to affected parties.

8.2.7. **Step 7: Decision and Findings.**

A. **Decision.** After consideration of the application, the staff report, comments received from other reviewers (if applicable), and the evidence from the public hearing (if applicable), the decision-maker shall approve, approve with conditions, or deny the application based on its compliance with the applicable approval criteria. Written notification of the decision shall be provided by the Director or their designee to the applicant.

8.2.8. **Step 8: Conditions of Approval.** The decision-maker may impose such conditions on the approval of the application as may be necessary to reduce or minimize any potential adverse impact upon other property in the area, or to carry out the purpose and intent of the General Plan and this Development Code. No conditions of approval, except for those attached to Variances or Minor Modification approvals, shall be less restrictive than the requirements of this Development Code.

8.2.9. **Step 9: Lapse.** If applicable, the lapse of approval time frames established by the procedures of this Development Code may be extended only when all of the following conditions exist:

A. The provisions of this Development Code must expressly allow the extension;

B. An extension request must be filed prior to the applicable lapse-of-approval deadline;

C. The extension request must be in writing and include justification; and

D. Unless otherwise noted, authority to grant extensions of time shall rest with the decision-making body that granted the original approval (the one being extended).

(Ord. No. 37-09, § 1, 12-16-2009; Ord. No. 14-14, § 1, 12-2-2014; Ord. No. 03-15, § 2(Att.), 3-17-2015; Ord. No. 19-15, § 2(Att.), 12-1-2015; Ord. No. 07-22, § 3 (PLZM-21-0060), 4-19-2022; Ord. No. 01-24, § 3(Exh. A, B), 2-20-2024)

8.5. AMENDMENTS TO THE ZONING MAP (REZONINGS)

8.5.1. **Purpose.** The boundaries of any zoning district may be changed or the zoning classification of any parcel of land may be changed pursuant to this section. The purpose is not to relieve particular hardships, nor to confer special privileges or rights on any person, but only to make adjustments to the Official Zoning Map that are necessary in light of changed conditions or changes in public policy, or that are necessary to advance the general welfare of the city. Rezonings should not be used when a Conditional Use Permit, Variance, or Minor Modification could be used to achieve the same result.

8.5.2. **Procedure.** The common development review procedures of Section 8.2 shall apply, with modifications as noted below.

A. **Public Hearings.** A public hearing shall be held by the Planning and Zoning Commission and City Council unless the Director or their designee determines otherwise.

B. **Decision and Findings.** The following additional procedures shall apply:

1. **Review and Recommendation by Planning and Zoning Commission.**

   a. The Planning and Zoning Commission shall hold a public hearing on the proposed rezoning and vote to recommend that the City Council approve, approve with modifications, or deny the rezoning.

   b. The Director or their designee shall forward the Planning and Zoning Commission's recommendation to the City Council with an ordinance to amend the Official Zoning Map in accordance with the recommendation.

2. **Action by City Council.**

   a. The City Council shall approve or deny the application for a rezoning within 180 days of the determination that the application is administratively complete.

   b. For extenuating circumstances, the Director may grant a onetime extension of not more than 30 days. If an applicant requests an extension, the Director may grant extensions of 30 days for each extension granted.

   c. The City Council shall hold a hearing on the proposed rezoning and, within 90 days of the public hearing, approve with modifications, or deny the ordinance to amend the Zoning Map, or refer the application back to the Planning and Zoning Commission or to a committee of the City Council for further consideration.

   d. The requirements of subsection 2.a and b. do not apply to land that is designated as a district of historical significance pursuant to A.R.S. § 9-462.01.A or an area that is designated as historic on the National Register of Historic Places or Planned Area Developments as described in Section 8.6.

3. **Protests.** If the owners of 20 percent of the property by area and number of lots, tracts and condominium units within the Zoning Area of the affected property file a protest in writing against a proposed rezoning, it shall not become effective except by the favorable vote of three-fourths of all members of the City Council. If any members of the City Council are unable to vote on such a question because of a conflict of interest, then the required number of votes for passage of the question shall be three-fourths of the remaining membership of the City Council, provided that such required number of votes shall in no event be less than a majority of the full membership of the City Council. For the purposes of this section, "Zoning Area" means both of the following: the area within 150 feet, including all rights-of-way, of the affected property subject to the proposed amendment or change, and; the area of the proposed amendment or change.

4. **Form of Amending Ordinance.** An ordinance amending the Zoning Map shall contain the following:

   a. The name of each use district that the ordinance applies; and

   b. The legal description of the land within each zoning district applied by the ordinance.

5. **Successive Applications.** Following denial of a Zoning Map amendment proposal, no new application for the same or substantially the same action shall be accepted within one year of the date of denial, unless denial is made without prejudice.

C. **Lapse.** The City Council may approve a rezoning conditioned upon a schedule for development of the specific use or uses for which rezoning is requested. If at the expiration of this period the property has not been improved for the use for which it was conditionally approved, the City Council, after

notification by certified mail to the owner and applicant who requested the rezoning, shall schedule a public hearing to take administrative action to extend, remove or determine compliance with the schedule for development or take legislative action to cause the property to revert to its former zoning classification.

(Ord. No. 37-09, § 1, 12-16-2009; Ord. No. 11-18, § 1, 8-7-2018; Ord. No. 01-24, § 3(Exh. A, B), 2-20-2024)

Development Code Amendment - Administrative Completeness of Rezonings

PLZM-24-0107

City Council – December 17, 2024

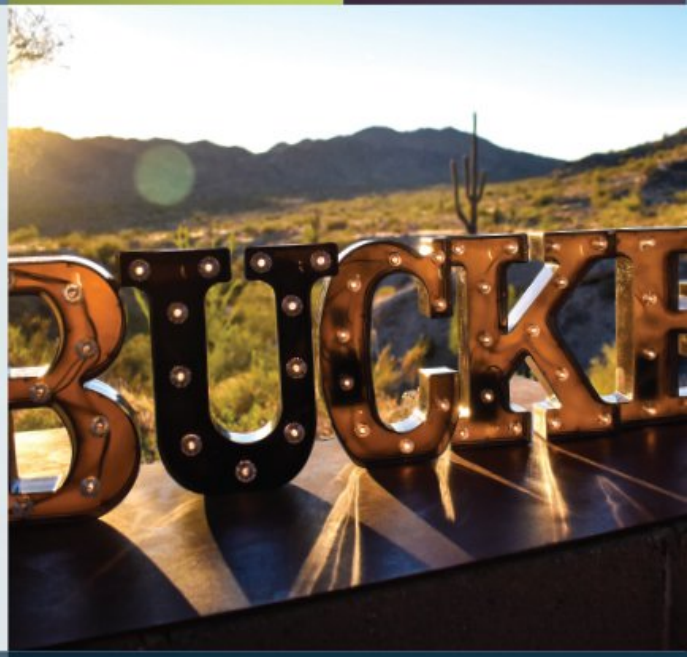

BUCKEYE, AZ

buckeyeaz.gov

Project Overview

- Applicant: City of Buckeye
- Request: Amendments to Development Code Article 8 (Sections 8.2 and 8.5), adding language regarding administrative completeness for rezoning applications in accordance with ARS 9-462.10

Request Background: SB1162

- Senate Bill 1162 signed into law by the Governor in April 2024, amending ARS to add Section 9-462.10
- Requires municipalities to adopt text amendment addressing administrative completeness of residential rezoning applications by January 1, 2025
- For simplicity, we propose this language apply to all rezonings

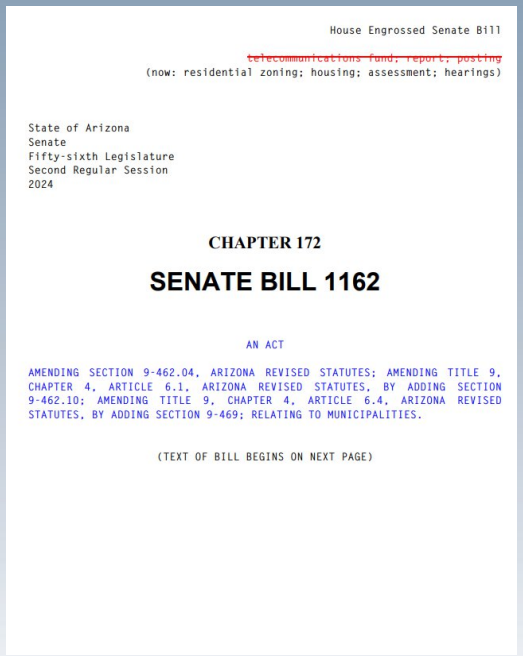

House Engrossed Senate Bill

~~telecommunications fund; report; posting~~
(now: residential zoning; housing; assessment; hearings)

State of Arizona
Senate
Fifty-sixth Legislature
Second Regular Session
2024

CHAPTER 172

SENATE BILL 1162

AN ACT

AMENDING SECTION 9-462.04, ARIZONA REVISED STATUTES; AMENDING TITLE 9, CHAPTER 4, ARTICLE 6.1, ARIZONA REVISED STATUTES, BY ADDING SECTION 9-462.10; AMENDING TITLE 9, CHAPTER 4, ARTICLE 6.4, ARIZONA REVISED STATUTES, BY ADDING SECTION 9-469; RELATING TO MUNICIPALITIES.

(TEXT OF BILL BEGINS ON NEXT PAGE)

Request Background: SB1162 (continued)

- For initial application: City must determine administrative completeness within 30 days
- For resubmittals: City must determine administrative completeness within 15 days
- Approval or denial within 180 days of the initial determination of administrative completeness
  - City may extend this timeframe once (not more than 30 days)
  - Applicant may request extensions (30 days each)
  - Exceptions to 180 days: PADs and designated historic properties

Impact to Current Process

- Planning Division Project Coordinators currently follow similar procedure for application completeness on ALL entitlement applications
- Planning to create a process to monitor 180-day clock and extensions
- Otherwise, minimal procedural impact expected

Public Participation

- Legal Notice: November 9, 2024
- No public comments received to date

Recommendation

- Conduct a public hearing
- Adopt Ordinance No. 30-24, approving PLZM-24-0107

WHEN RECORDED, RETURN TO:

City of Buckeye
ATTN: City Clerk, Lucinda J. Aja
530 East Monroe Avenue
Buckeye, Arizona 85326

ORDINANCE NO. 30-24

AN ORDINANCE OF THE MAYOR AND CITY COUNCIL OF THE CITY OF BUCKEYE, ARIZONA, DECLARING AS A PUBLIC RECORD THAT CERTAIN DOCUMENT ON FILE WITH THE CITY CLERK ENTITLED THE "CITY OF BUCKEYE DECEMBER 2024 DEVELOPMENT CODE ARTICLE 8 UPDATE;" ADOPTING THE SAME BY REFERENCE; AMENDING CHAPTER 7, DEVELOPMENT CODE, ARTICLE 8, REVIEW AND APPROVAL PROCEDURES, AS SET FORTH IN THE "CITY OF BUCKEYE DECEMBER 2024 DEVELOPMENT CODE ARTICLE 8 UPDATE;" PROVIDING FOR REPEAL OF CONFLICTING ORDINANCES AND PROVISIONS; AND PROVIDING FOR SEVERABILITY.

WHEREAS, that certain document entitled the "City of Buckeye December 2024 Development Code Article 8 Update," of which at least three paper copies or one paper copy and one electronic copy are on file in the Office of the City Clerk and open for public inspection during normal business hours, is hereby declared to be a public record and said copies are ordered to remain on file with the City Clerk; and

WHEREAS, the Mayor and City Council are authorized by City Code Chapter 2, Article 2-5, Section 2-5-4 to adopt or amend all ordinances necessary or proper for the carrying into effect of the powers vested in the City; and

WHEREAS, the City Council desires to amend the Development Code in conformance with Senate Bill 1162, adopted by the Arizona Legislature and codified as Ariz. Rev. Stat. § 9-462.10 (renumbered as Ariz. Rev. Stat. § 9-462.11), which provides, in part, that Arizona cities and towns must adopt zoning code amendments on or before January 1, 2025, related to the approval of residential zoning applications; and

WHEREAS, the City Council has considered the probable impact of this Ordinance on the cost to construct housing for sale or rent; and

WHEREAS, the City Council has determined that the proposed amendment to the Development Code of the City of Buckeye is in conformance with the General Plan; and

WHEREAS, in accordance with Article II, Sections 1 and 2 of the Constitution of Arizona, the City Council has considered the individual property rights and personal liberties of the residents of the City before adopting this Ordinance; and

WHEREAS, a public hearing on the Code update was held by the City of Buckeye Planning and Zoning Commission on November 26, 2024. Following the close of the public hearing, the Planning and Zoning Commission voted unanimously to recommend approval of the update to the City Council.

NOW THEREFORE BE IT ORDAINED, by the Mayor and City Council as follows:

Section 1. The foregoing recitals are incorporated as if fully set forth herein.

Section 2. That certain document entitled the "City of Buckeye December 2024 Development Code Article 8 Update," of which at least three paper copies or one paper copy and one electronic copy are on file in the Office of the City Clerk and open for public inspection during normal business hours, is hereby referred to, adopted, and made a part hereof as if fully set out in this Ordinance.

Section 3. The City Code, Chapter 7, Article 8 is hereby replaced in its entirety with the "City of Buckeye December 2024 Development Code Article 8 Update."

Section 4. All ordinances and parts of ordinances in conflict with the provisions of this Ordinance are hereby repealed.

Section 5. If any section, subsection, sentence, clause, phrase or portion of this Ordinance or any part of the "City of Buckeye December 2024 Development Code Article 8 Update" adopted herein by reference is for any reason held invalid or unconstitutional by the decision of any court of competent jurisdiction, such decision shall not affect the validity of the remaining portions thereof.

Section 6. The Mayor, City Manager, City Attorney, and City Clerk are hereby authorized and directed to take all steps and execute all documents necessary to carry out the purpose and intent of this Ordinance.

PASSED AND ADOPTED by the Mayor and City Council of the City of Buckeye, Arizona, this 17th day of December, 2024.

_____

Eric W. Orsborn, Mayor

ATTEST:

_____
Lucinda J. Aja, City Clerk

APPROVED AS TO FORM:

_____
K. Scott McCoy, City Attorney

CITY OF BUCKEYE
Regular Council Meeting
COUNCIL ACTION REPORT

MEETING DATE: 12/17/24	**AGENDA ITEM:** 6.C. DS - PH - West Fillmore Highstreet Multi-Family Rezone
DATE PREPARED: 12/17/24	**DISTRICT NO.:** Council District 5
STAFF LIAISON: Mandy Woods, Senior Planner, swoods@buckeyeaz.gov, (623) 640-6093	
DEPARTMENT: Development Services	**AGENDA ITEM TYPE:** Public Hearing and Non Consent - New Business Items

ACTION/MOTION: (This language identifies the formal motion to be made by the Council)
Council to hold a public hearing and take action on Ordinance No. 29-24, amending the zoning map of the City of Buckeye for approximately 17.89 acres of land located approximately 1000 feet east of the northeast corner of north Verrado Way and west Fillmore Street, from Commercial Center (CC) to Multi-Family 2 (MF-2).

SUMMARY

PROJECT DESCRIPTION:
Katie Rounds of The Kaidence Group, on behalf of developer Highstreet Ventures Inc. and property owner Highstreet West Fillmore (2024) Apartments Ltd., is requesting approval of a rezone of 17.89 acres located 1,000 feet east of the northeast corner of Verrado Way and Fillmore Street from Commercial Center (CC) to Multi-Family 2 (MF-2). The property was previously owned by Summit Community Lutheran Church but was recently purchased by the applicant's development team. Once rezoned, the applicant intends to seek site plan approval for the development of a 510-unit multi-family residential community. The Planning and Zoning Commission held a public hearing on November 12, 2024 and recommended the City Council approve this zoning change.

BENEFITS:
The subject rezone will allow the property to develop with multi-family housing that is not only compatible with the vision of The Landing but will also increase housing options for employees and students.

FUTURE ACTION:
Consideration of a Site Plan (PLZSP-24-0017) is anticipated to occur at a future Planning & Zoning Commission meeting.

FINANCIAL IMPACT STATEMENT:
See Planning Items Financial Impact Statement.

FINANCIAL IMPACT STATEMENT:
Although a fiscal impact analysis has not been conducted on this specific project, all new development will have an ongoing fiscal impact on the city. The development is responsible for construction of all infrastructure necessary to serve the site and will generate one-time revenue for the city such as permit fees, construction sales tax and development impact fees. Longer term fiscal impacts include increased demands for municipal services, the costs of which may or may not be offset by increased property values/tax levies, city sales tax, state shared revenues and the increased demand for commercial and retail development. Any areas that will be maintained by the city are constructed by the developer and then conveyed to the city two years after construction.

Items related to a project or facility location must include an attached vicinity map for Council

Review.

ATTACHMENTS:

PLZZ-24-0009 - West Fillmore Highstreet MF Rezone - Staff Report - CC20241217.docx
Exhibit A - PLZZ-24-0009 - West Fillmore Highstreet MF Rezone - Vicinity Map - CC20241217.pdf
Exhibit B - PLZZ-24-0009 - West Fillmore Highstreet MF Rezone - Zoning - CC20241217.pdf
Exhibit C - PLZZ-24-0009 - West Fillmore Highstreet MF Rezone - GP Land Use - CC20241217.pdf
Exhibit D - PLZZ-24-0009 - West Fillmore Highstreet MF Rezone - Narrative - CC20241217.pdf
Exhibit E - PLZZ-24-0009 - West Fillmore Highstreet MF Rezone - CPR - CC20241217.pdf
PLZZ-24-0009 - West Fillmore Highstreet MF Rezone - Presentation - CC20241217.pptx
Ordinance 29.24.exhibits.pdf

REZONE

Report to the Mayor and City Council

CASE NUMBER:	PLZZ-24-0009
TITLE:	West Fillmore Highstreet Multi-Family Rezone
MEETING DATE:	November 12, 2024

Applicant/Owner:	Katie Rounds of The Kaidence Group on behalf of Highstreet Ventures Inc./Highstreet West Fillmore (2024) Apartments Ltd. (developer/ owner)
Request:	Rezone from Commercial Center (CC) to Multi-Family 2 (MF-2)
District:	5
Location:	1,000' East of the Northeast Corner of Verrado Way and Fillmore Street (Exhibits A, B, and C)
Site size:	Approximately 17.89 acres
Density:	Proposed: 28.5 du/acre Per MF-2: 15.1 du/ac minimum, no maximum
Public input:	No comments have been received to date; the Planning & Zoning Commission recommended approval of the rezoning on November 12, 2024
Recommendation:	Conduct a Public Hearing and Adopt Ordinance No. 29-24, approving Case PLZZ-24-0009, subject to conditions a) through j)

PROJECT DESCRIPTION:

1. Katie Rounds of The Kaidence Group, on behalf of developer Highstreet Ventures Inc. and property owner Highstreet West Fillmore (2024) Apartments Ltd., is requesting approval of a rezone of 17.89 acres located 1,000 feet east of the northeast corner of Verrado Way and Fillmore Street from Commercial Center (CC) to Multi-Family 2 (MF-2) to facilitate development of a multi-family residential community. Note the property was previously owned by Summit Community Lutheran Church but was recently purchased by the development team. The applicant's rezoning narrative is included as Exhibit D.

AREA CONTEXT:

2. Table 1: Existing Land Use, General Plan Designation, and Zoning District:

	LAND USE	GENERAL PLAN	ZONING
Subject Property	Vacant	Activity Center	Commercial Center (CC)
North	Summit Community Church	Activity Center	Commercial Center (CC)
South	Vacant (property owned by Maricopa County Flood Control District & Buckeye Union High School District)	Activity Center	Planned Residential (PR) and Maricopa County Rural-43 (RU-43)
East	Vacant	Activity Center	Light Industrial (I-1)
West	Vacant (anticipated future mixed use commercial and multi-family residential development, The Mix)	Activity Center	Planned Area Development (PAD)

PUBLIC PARTICIPATION SUMMARY:

3. A neighborhood meeting, providing an opportunity for interested parties to learn more about the request, was held on August 28, 2024 at 6:00 P.M. at Summit Community Church, within the Lounge room. As required by Buckeye Development Code, written notices to property owners within 300 feet of the subject site were mailed on August 13, 2024, 15 days prior to the date of the meeting.
4. Attendees included the applicant's project team, the previous property owner (lead pastor), and City staff. No residents attended the neighborhood meeting. Outside of the neighborhood meeting, staff and the applicant's project team have not received any written or verbal feedback from the public pertaining to this request.

5. All required notifications were completed at least 15 days in advance of the Planning & Zoning Commission public hearing date, as follows. Note that two newspaper legal notices were prepared to meet the required timeframe in the Development Code (publication at least 15 days prior to the hearing, but no more than 45 days prior to the hearing).

6. Table 2: Public Notices:

Notification Element	Date
Legal Notice published in the Arizona Republic	October 23, 2024 (Planning & Zoning Commission) November 30, 2024 (City Council)
Site Posting	October 23, 2024
Mailing Notice to Property Owners Within 300'	October 24, 2024

7. No public comment concerning the rezoning request has been received to date. See Exhibit E for the Citizen Participation Report.

8. There were no speakers during the November 12, 2024 Planning & Zoning Commission public hearing for this item.

BACKGROUND:

9. *August 1999:* The subject property was annexed as part of a larger annexation by City Council's adoption of Ordinance 8-99.

10. *January 2019:* The subject parcel was created through an approved Minor Land Division (Maricopa County Recording # 20190112762).

11. *November 12, 2024:* The Planning & Zoning Commission conducted a public hearing and recommended approval of the proposed rezoning. There were no speakers during the public hearing for the item.

ANALYSIS:

Conformance with the General Plan

12. The General Plan land use designation of the property is Activity Center, specifically the Buckeye Gateway Activity Center, now more commonly known as The Landing. Located south of I-10 near the City's eastern boundary, development within this activity center is expected to capitalize on existing area assets such as the West-MEC education center and several master planned communities, including Verrado to the north. It is anticipated that this activity center area will be an employment, educational, and entertainment hub

serving the greater West Valley region and will offer diverse living opportunities. Development in this activity center is also held to higher regard to architecture and site design, with importance placed on creating a walkable environment that is more urban than the development occurring elsewhere within the City. The proposed multi-family zoning and anticipated development of the property is not only compatible with the vision for The Landing but will also increase housing options for employees and students, reducing commute times and traffic congestion for residents who may have the ability to walk to nearby shopping, employment, and educational institutions.

13. The rezoning furthers the following General Plan goals and policies:
    a. Policy G-4.1 The City of Buckeye will encourage a diverse mix of uses appropriate to support an area, such as in Activity Centers and Neighborhood areas to encourage residents to lead an active lifestyle.
    b. Policy G-8.2 Residential uses within Activity Centers should only be permitted at densities of six dwelling units per acre (6 du/ac) or greater.
    c. Policy G-17.1 The City of Buckeye should encourage a variety of housing types that meet the demands and needs of existing and future residents.
    d. Goal G-19 Buckeye has attractive, high quality, and healthy neighborhoods.

Land Use and Zoning

14. The requested rezone of approximately 17.89 acres from CC to MF-2 meets the intent of the Development Code. The MF-2 district is intended to accommodate the development of multi-family units at urban densities in a mid- or high-rise configuration. This district is intended to be used along major transportation corridors and in or near business centers but is not intended to be used in the immediate proximity of single-family residential development at substantially lower densities.

15. It is also the intent of the MF-2 district to require exceptional site planning and design in order to provide usable open space (exclusive of parking areas and streets) and minimize visual, privacy, and traffic-related impacts on any adjacent residential development or open space. Any future Site Plan request shall be evaluated against this intent and that of The Landing's vision, and all requirements of the Development Code.

Future Development & Infrastructure

16. An application for Site Plan Review (to be reviewed by Planning & Zoning Commission) for a 510-unit multi-family residential community has been submitted and is under review. Approval of a Site Plan application consistent with the MF-2 zoning will be required prior to development occurring on the property.

17. The site is located within the City of Buckeye sewer and water service areas. The developer will be responsible for completing all water and sewer infrastructure improvements needed to serve the proposed development, the extent of which will be determined when a Site Plan is approved for the project.

18. The property will be serviced by City of Buckeye Police and Fire Departments. The nearest fire station is Fire Station #703 located in Verrado, approximately 1.9 roadway miles from the subject property. The nearest police station is located in the City complex at Yuma Road and Dean Road, approximately 2.3 roadway miles from the site.

19. The property is located within the Buckeye Union High School (BUHSD) and Liberty Elementary School Districts (LESD). The applicant sent notice of the development plans to each district. Donation agreement between the developer and school districts are currently in process as requested by the districts.

20. The following City of Buckeye departments have reviewed and have found no outstanding issues with the application:

    a. Fire
    b. Public Works
    c. Police
    d. Development Services, including Planning and Civil Engineering/Survey

RECOMMENDATION:

21. Staff recommends the Mayor and City Council conduct a public hearing and adopt Ordinance No. 29-24, approving PLZZ-24-0009, a Rezone from Commercial Center (CC) to Multi-Family 2 (MF-2) for West Fillmore Highstreet Multi-Family, subject to conditions a) through j), for the following reasons:

    - Furthers goals of the Buckeye General Plan and contributes to a vibrant Buckeye Gateway Activity Center (The Landing) with residential density appropriate to an Activity Center
    - Conforms to the Buckeye Development Code
    - Consistent with the Luke Graduated Density Concept (GDC) and Gateway Activity Center Area GDC Policy
    - No outstanding issues from reviewing departments

Planning Division Conditions – Standard/General

a) The property owner/s and their successor waive any and all claims for diminution in value of the property with regard to any action taken by City of Buckeye as result of this approval.

Fire Department Conditions – Standard/General

b) The Buckeye Fire Chief and City Engineer shall determine the number, location, and types of all fire hydrants.

c) Prior to delivery of any combustible materials to the site, a fire protection system approved by the Buckeye Fire Marshal shall be completely operational.

d) All buildings shall be equipped with a fire protection system as required by City of Buckeye Ordinance 03-22.

e) Where two fire apparatus access roads are required, they shall be placed a distance apart equal to not less than one half of the length of the maximum overall diagonal dimension of the lot or area to be served, measured in a straight line between accesses.

Public Works Conditions – Standard/General

f) All landscaped areas within the public rights of way shall be designed and sealed by a landscape architect licensed by the Arizona Board of Technical Registration. The City Public Works Department shall review all irrigation plans for material selection only; therefore, the landscape architect shall coordinate with the Public Works Department early in the design to ensure the most efficient means of landscape irrigation that will reduce both long term maintenance costs and keep watering to the absolute minimum required for healthy growth of landscaping along the roadways of the City of Buckeye.

g) No new natural turf shall be installed in a public right-of-way or median. Areas with up to 10,000 square feet of turf within a public right-of-way at gateways, entrances to major communities, or special landscaping designs approved by the city's development services department are exempt from the restrictions of this stipulation.

h) Plant material within the right-of-way shall not obstruct any regulatory signage or sight distance triangle as defined in the Engineering Development Standards.

i) The following trees are prohibited from any landscaping plans in accordance with Chapter 9 of City Code (Section 9-10): Male Mulberry Tree (Morus Alba), Olive Tree (Olea Europea). Additionally, North Indian Rosewood Trees (Dalbergia Sissoo) shall not be planted within the rights of way (and are suggested not being planted within the property) due to their destructive and invasive root structure.

j) Storm Drainage: The City of Buckeye is permitted as a Phase 2 MS4 and is now subject to more stringent standards for stormwater discharge. All stormwater plans must now meet the requirements of the City of Buckeye's MS4 permit as issued by ADEQ (Permit Number AZG2016-002).

ATTACHMENTS:

Exhibit A – Vicinity Map
Exhibit B – General Plan Land Use Map
Exhibit C – Zoning Map
Exhibit D – Narrative
Exhibit E – Citizen Participation Report

Prepared By:
Mandy Woods, CFM, Senior Planner

Reviewed By:
Ken Galica, Planning Manager



VICINITY MAP

PLZZ-24-0009

West Fillmore Highstreet Multi-Family Rezone

Council District #5

BUCKEYE, AZ

N W E S

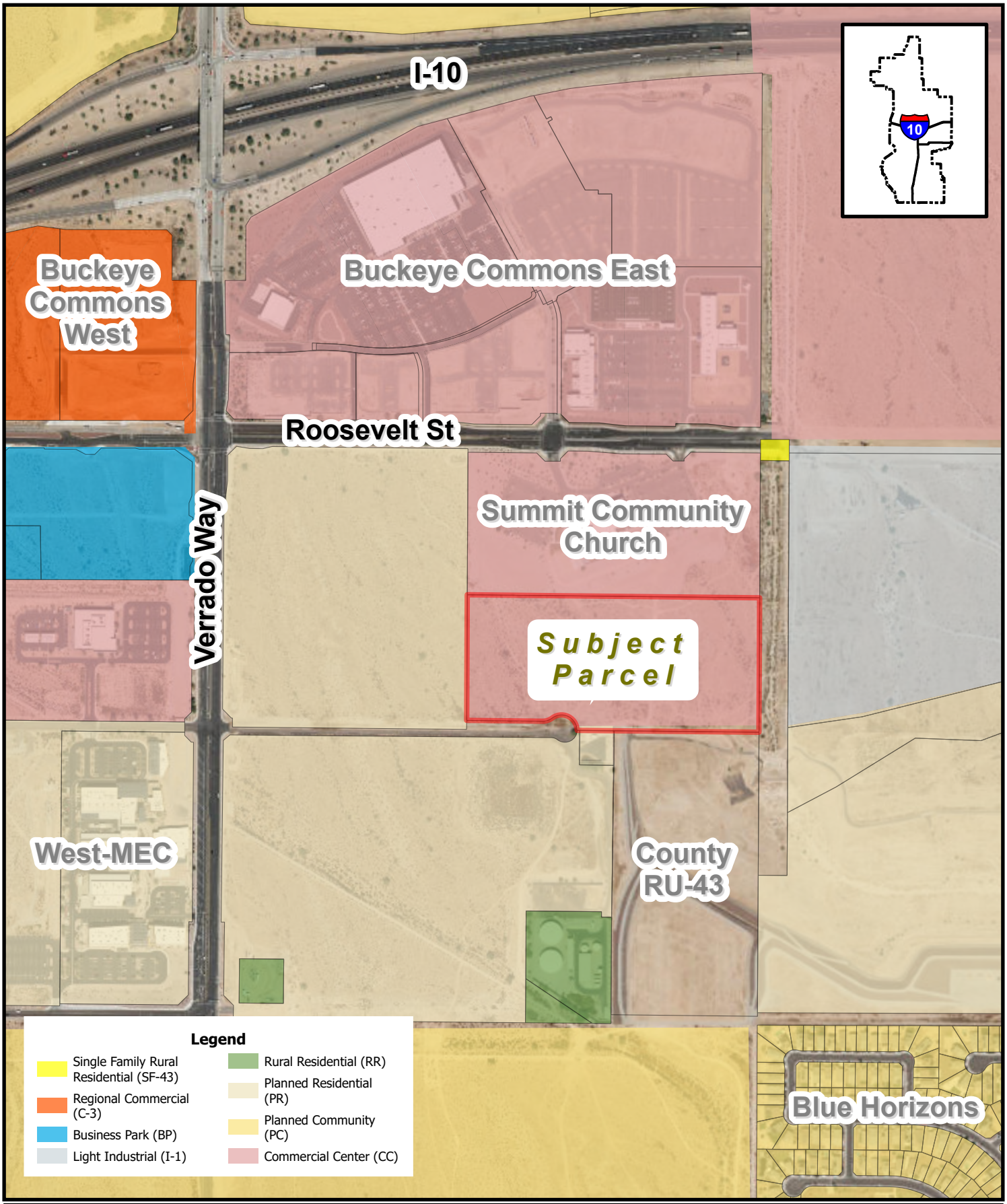

ZONING MAP

PLZZ-24-0009

West Fillmore Highstreet Multi-Family Rezone

Council District #5

BUCKEYE, AZ

N W E S

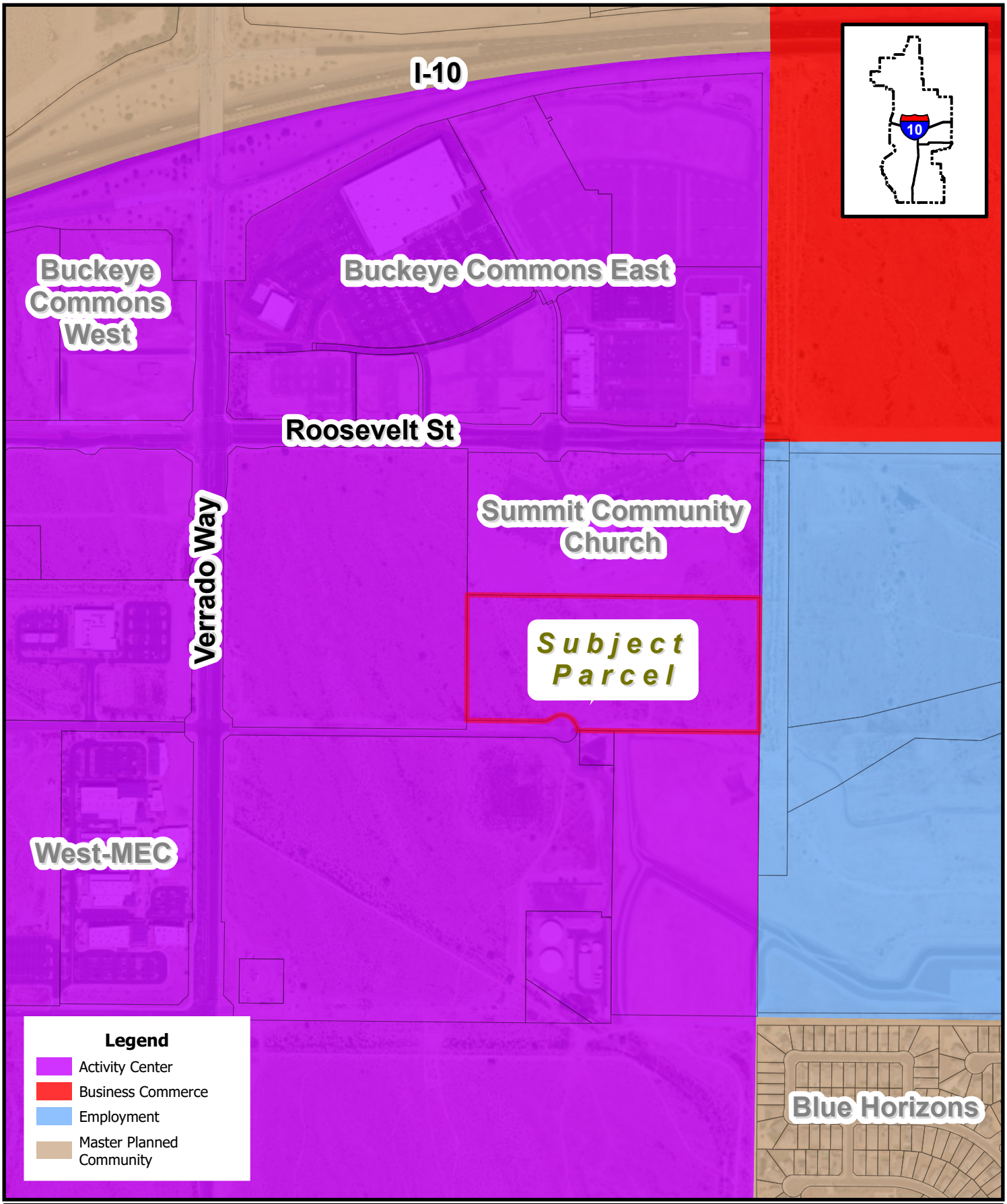

GENERAL PLAN LAND USE MAP

PLZZ-24-0009

West Fillmore Highstreet Multi-Family Rezone

Council District #5

BUCKEYE, AZ

N W E S

2R PLZZ-24-0009 RECEIVED SEPT 06 2024 AL

West Fillmore Highstreet

Project Narrative

Dated: July 12, 2024
Revised: September 6, 2024

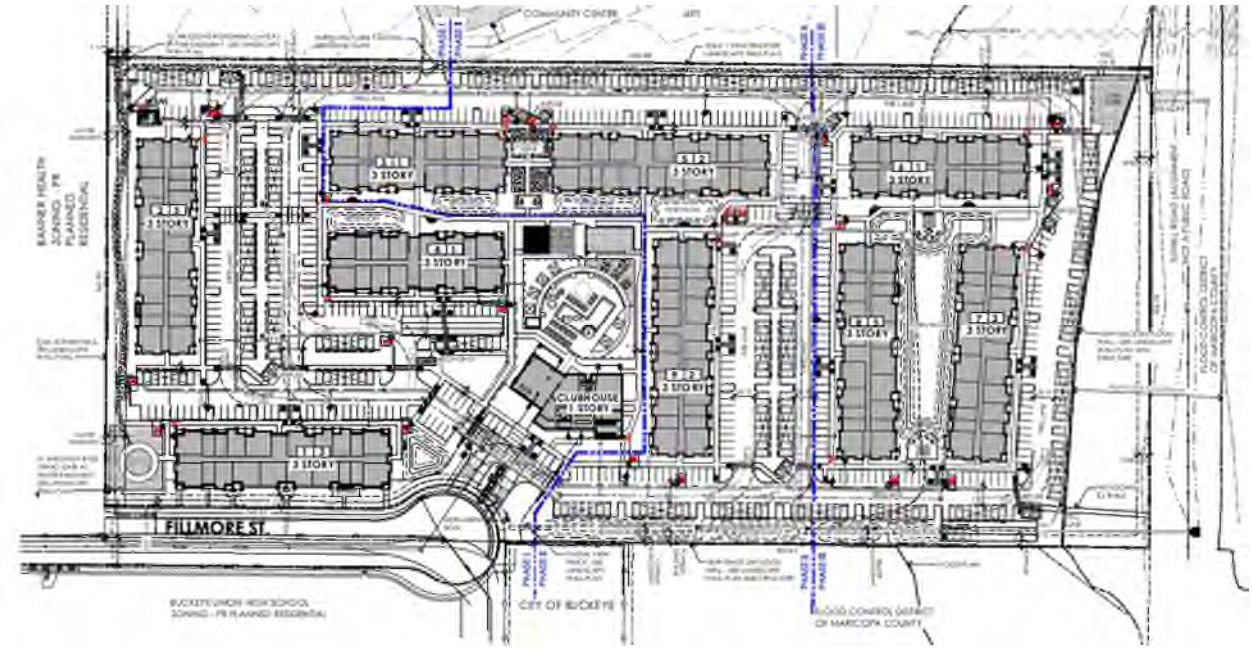

PROJECT TEAM

DEVELOPER	Highstreet Ventures Inc.
DEVELOPER LEAD	Kaidence Advisors
ARCHITECT	Todd & Associates
CIVIL ENGINEER	Hilgart Wilson
ALTA SURVEYOR	Superior Surveying Services
GEOTECHNICAL ENGINEER	VANN Engineering
ENVIRONMENTAL ENGINEER	ECS Southwest

DESCRIPTION OF REQUEST

Highstreet is requesting support and approval to rezone the subject property from the current Commercial Center (CC), an obsolete zoning district, to Multi-Family 2 (MF-2) and for Site Plan approval from the Planning & Zoning Commission. The future MF-2 zoning is intended by the City of Buckeye to accommodate the development of multi-family units at urban densities. This zoning district is intended to be used along major transportation corridors and in or near business centers but is not intended to be used I the immediate proximity of single family residential development.

Specific Application Requests:

1. Rezoning from Commercial Center (CC) to Multi-Family 2 (MF-2)
2. Site Plan Approval by Planning Commission

PROPOSED PROJECT & LAND INFORMATION

West Fillmore Highstreet is a proposed 510-unit multi-family community located East of Verrado Way and North of Fillmore Street (APN: 502-35-836). The subject parcel is 17.89 acres and is currently undeveloped and vacant land. The subject parcel is outlined in yellow below.

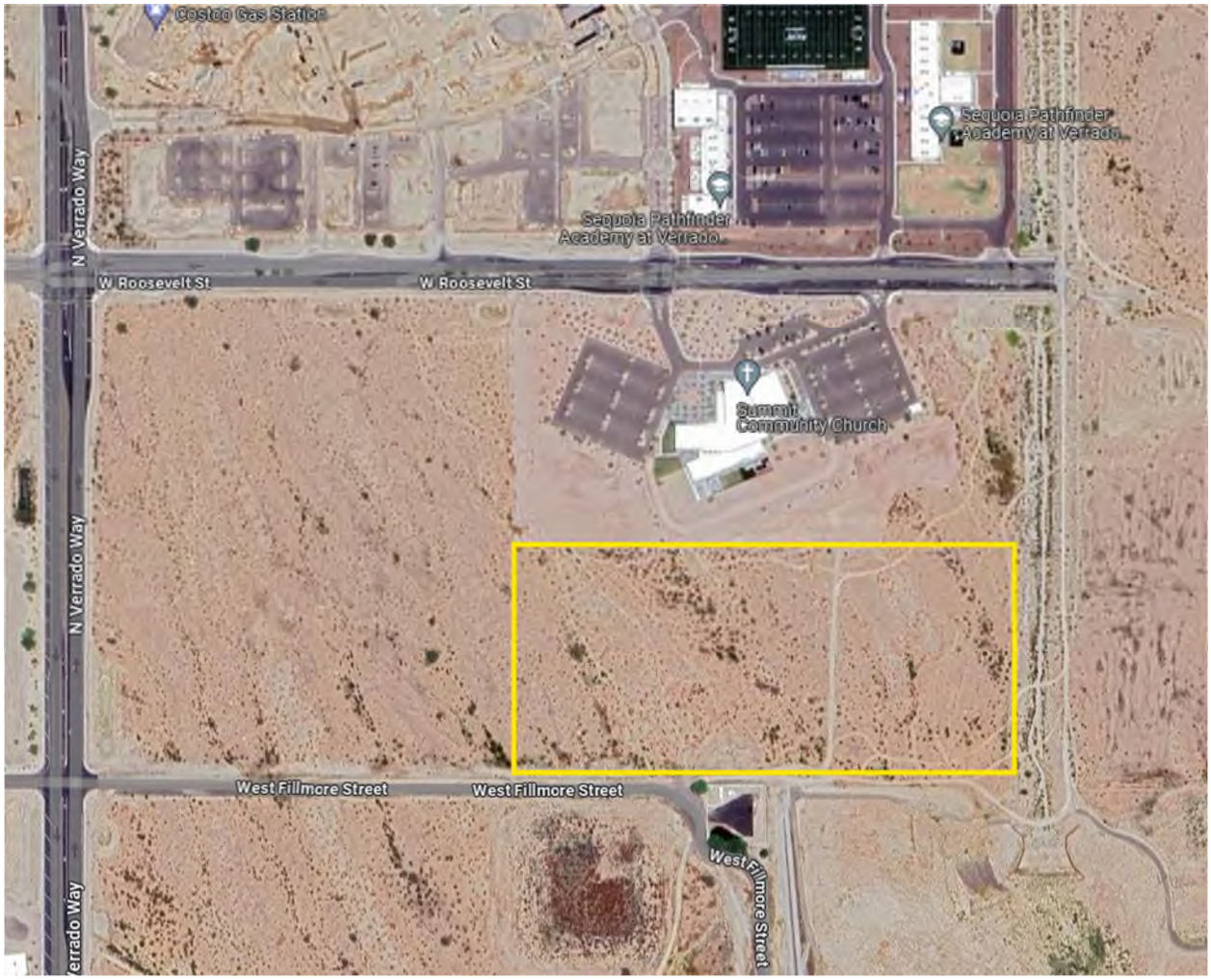

The project is located within the Buckeye Gateway Activity Center and the future specific plan area called “The Landing”. The current zoning is Commercial Center (“CC”), which is an obsolete zoning district.

Adjacent zoning includes:

Subject Property: CC
North (Summit Church): CC
East (Flood Zone): I-1
South (Vacant Land): PR & RU-43 (County)
West (Vacant Land): PR

Please refer to the vicinity map below with the proposed development and how it relates to surrounding properties and their associated zoning.



PROPOSED PROJECT DESIGN INFORMATION

The proposed multi-family community will include nine garden style residential buildings all three stories in height and one amenity clubhouse building. The proposed density is 28.5 dwelling units per acre (including the undevelopable flood zone land). The unit mix is proposed to be 28.2% studio, 29.4% one bedroom and 42.4% two bedrooms. Our target market will be all of the employees working in the current and emerging commercial retail and health care district to the north and west of our proposed community.

NET ZERO DESIGN FOCUS: The project will be designed and constructed with a focus on minimizing energy consumption through better technology, airtightness, a highly efficient building envelope, additional insulation and no burning of carbon for heating so the entire community has a carbon free footprint. Previous Highstreet communities use 75% less energy than the building code minimum. This community will also incorporate extensive solar and electric vehicle charging stations, far exceeding any building code minimums.

BUCKEYE DESIGN STANDARDS: The proposed project will meet or exceed the City of Buckeye parking, open space, landscape, shading, lighting, green energy, height and density requirements.

Site Acreage	+/- 17.89 Acres
Lot Coverage Provided	22.5%
Landscaping Provided	30%
Open Space Provided	40.2%
Density Provided	28.5 DU's / Acre
Parking Provided	723 Stalls

VEHICULAR ACCESS: The community will be accessed by residents from Fillmore Street and a secondary emergency/fire access will be provided via an easement across the Summit Church parcel to the North, connecting to Roosevelt Street. Residents will enter the community at a gated entry with remote entry, minimizing wait time and queuing length at the main entry. The entrance is designed to accommodate three queued cars with any additional overflow entering into the Fillmore dead end cul-de-sac, not impacting through traffic. Community visitors and/or interested future residents have the option to park in one of the visitor parking stalls at the clubhouse ahead of the gates.

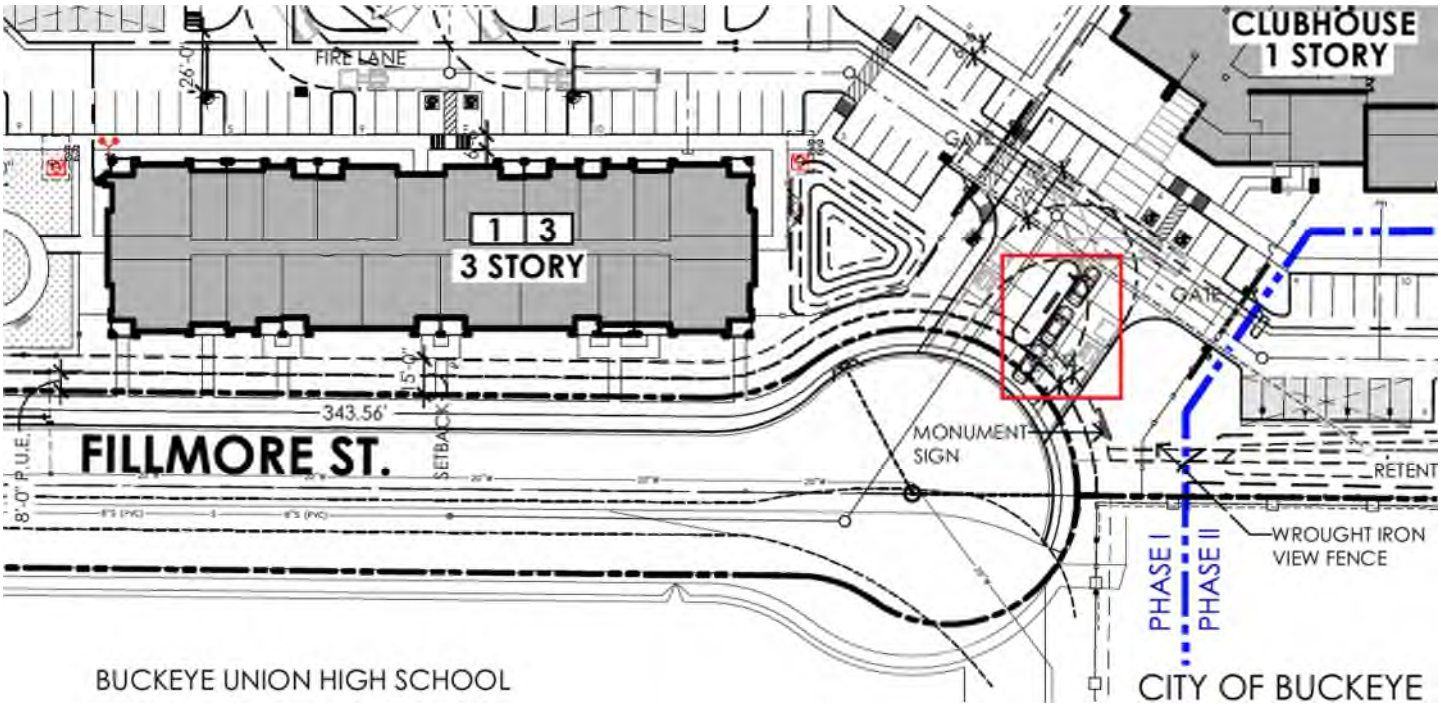

PEDESTRIAN PATHS: Additionally, the project will incorporate a pedestrian walking path along the western and northern edges of the property connecting two community park areas and also connecting via a gate to the future pedestrian path planned for the flood zone to the immediate east (off-site and to be constructed by others). The proposed pedestrian path is shown in green on the landscape plan below.

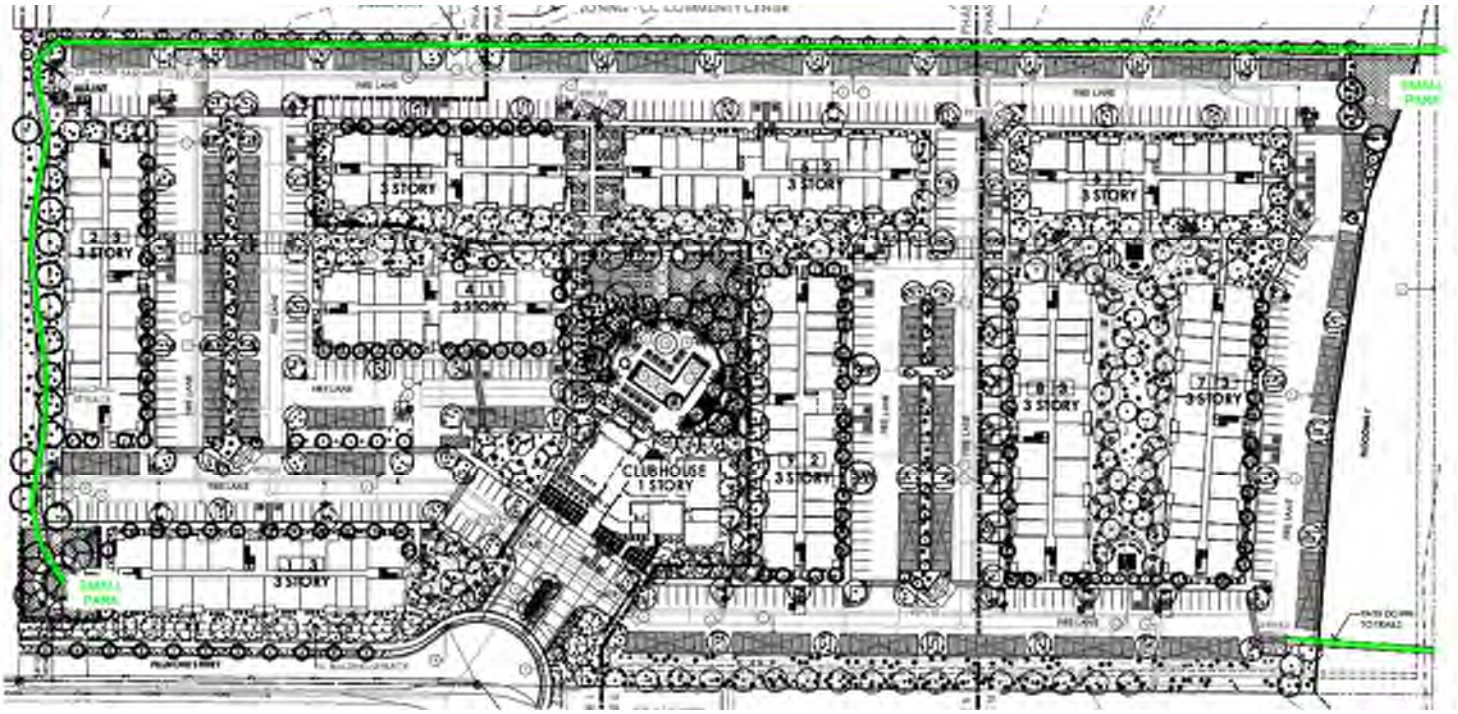

PUBLIC SERVICE IMPACT: This project's impact on fire, police and park will be handled via impact fee. A Certificate of Adequate School Facilities will be submitted to local schools per Section 8.15 of the City of Buckeye Development Code within 15 days of application.

REFUSE COLLECTION: Refuse collection will consist of a series of dumpster enclosure locations strategically placed around the site for the residents to conveniently access both trash and recycle disposal. Dumpster placements on the site are located in such a pattern as to facilitate a simple loop pattern for the trash and recycle collection trucks.

CONSTRUCTION PHASING: This project is intended to be built in two or three phases depending on the timing of the CLOMR approval needed to build in the adjacent flood zone. The three proposed phases are highlighted in the site plan below.

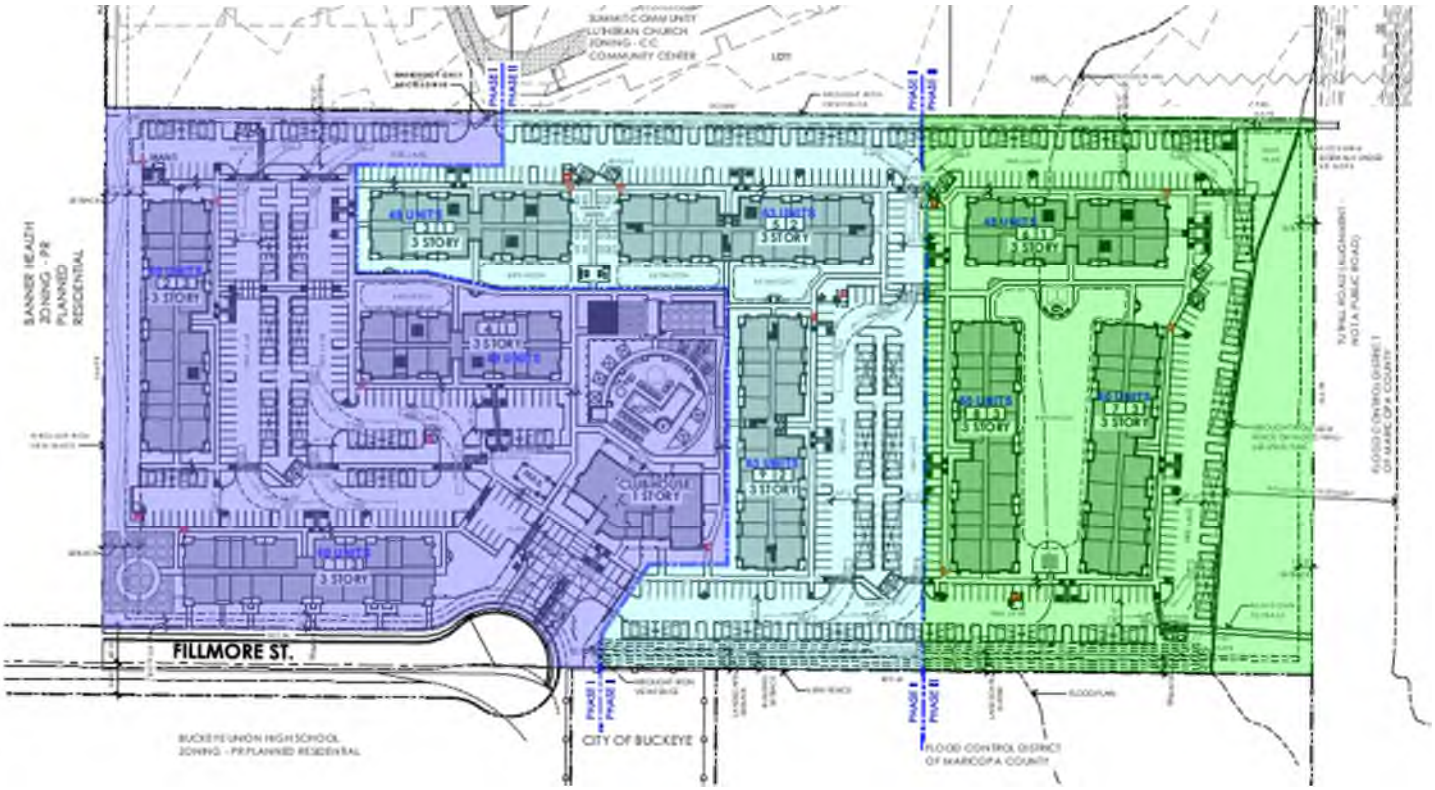

PROJECT ARCHITECTURE & LANDSCAPE DESIGN

The design of the project will be a distinct Southwest Contemporary style with material and color selections that harmonize with the rich, warm colors of the Arizona desert and mountains. The building elevation designs will utilize roof line articulation and color diversity that will create an interesting interplay against our azure blue sky and Arizona's famous sunsets. Like the elevations, the building footprints will utilize an articulation of wall surfaces, colors and materials plus covered patios to invite an exciting play of shades and shadows that move and change throughout day. Below is a perspective of the proposed building and clubhouse elevations.





The landscape design for this project embraces a Net Zero approach, aiming to balance the environmental impact by creating a self-sustaining system. Keys to this strategy are the thoughtful use of trees and vegetation to reduce energy consumption, stormwater management through rainwater harvesting, and enhancing the livability of the site by incorporating shade whenever possible.

Trees are strategically planted to shade buildings, reducing the heat load and lowering energy costs for cooling. In a desert environment, this shading is crucial not only for energy efficiency but also for creating comfortable outdoor spaces. By providing shade, trees make the site more livable, allowing residents and visitors to enjoy outdoor activities even during the hottest months.
Water conservation is a priority in our design, incorporating both passive and active rainwater harvesting strategies. Passive rainwater harvesting is achieved through the implementation of rain gardens, which capture and infiltrate runoff, reducing the demand on municipal stormwater sewers. Additionally, cisterns are used to harvest rainwater from the roof, which is then utilized in community gardens, ensuring a sustainable water source for irrigation.

The site's natural grade change of 7 feet has been leveraged to create unique and engaging multi-level amenities. This includes a sunken event lawn and stage area that serves as a gathering space for community events, as well as a bi-level pool area that provides varied experiences and opportunities for relaxation and recreation.

Our plant palette features either native or drought-tolerant species, ensuring that the landscape is sustainable and resilient in the desert environment. Thorny plants are strategically used to attract and support local wildlife, while non-thorny plants are placed in pedestrian and parking areas to ensure safety and accessibility. This careful selection and placement of plants enhance the ecological value of the site while maintaining functionality and aesthetics.

PRELIMINARY WATER AND SEWER DEMAND INFORMATION

As approved in the May 20, 2024 Letter of Intent from the City of Buckeye, it is agreed that we will use the City of Phoenix multi-family design flow factors for both water and wastewater demands. The revised formula for determining water demand shall be: (# of units) * 240 * 1.8/24/60 = total GPM for project. For this proposed project with 510 units, we will require 153 gpm for the residential units

and 6.8 for the clubhouse and open space. The full water and sewer demand exhibits are included as attachments.

WATER SERVICE: Highstreet will be purchasing 82 gpm from Summit Church and will be purchasing the remaining 78 +/- gpm from the City of Buckeye at the rate of $6,355.58/gpm.

WASTEWATER SERVICE: Highstreet will be acquiring approximatly 255.1 EDU's of treatment capacity in the Sundance WRF from Summit Church and will pay the City of Buckeye wastewater impact fee for the remaining EDU's required to complete the development.

Please see the included water and sewer demand letters for further detail on estimated demand calculations (prepared by Hilgart Wilson Engineering).

HIGHSTREET VENTURES INFORMATION (DEVELOPER)

Highstreet is a Kelowna, BC-based company that has completed over 5,000 multi-family homes since 2005. We design and build Carbon Free Homes™, with Quality Inside™ and double the industry standard warranty, with extensive use of on-site solar. Our construction team is known for building with the safest, cleanest, most organized, professional, efficient and happiest sites that are often handed over to our in house property management team. When we keep our communities, we have industry leading net promoter scores (over 70) from our community members (aka tenants) and believe in reliability, responsiveness and relationship building.

This winning formula has allowed us to grow over the years, with over 80 current Highstreeters who invest in Highstreet and are among the most engaged and talented team in real estate.

Highstreet Residential Community Design Highlights:

- BC Energy Step Code 4, Net-Zero Energy Ready
- Built Green Canada, Platinum Certified
- Robust and airtight envelope to meet energy targets
- Luxury-rated sound attenuation for wood-framed buildings
- Water-saving fixtures, reducing water use by 35% or more within all buildings
- Low-VOC paints and adhesives on all interior surfaces
- Energy Star appliances
- Triple pane windows
- Solar panels to supplement base building electrical demand
- EV Chargers
- High-efficiency Energy Recovery Ventilators in every dwelling unit
- Low-impact site design
- Only native and drought-tolerant plant species used in landscape design
- Comprehensive stormwater detention systems
- LED lighting

Highstreet Values, Vision, Mission & Strategy

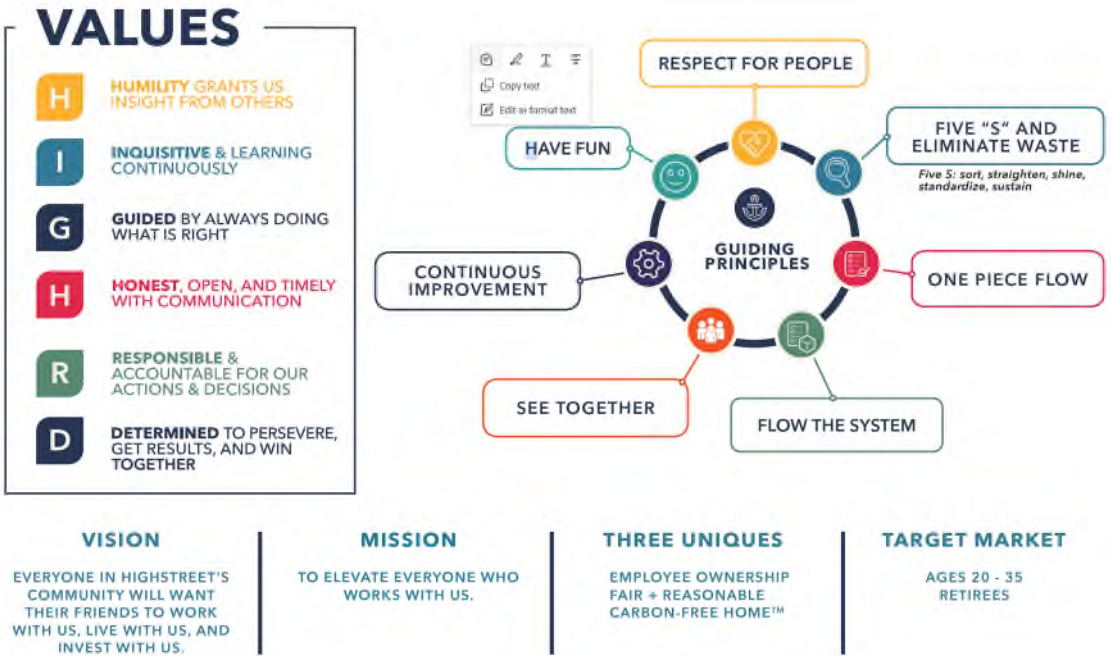

West Fillmore Highstreet

Citizen Participation Plan Report

November 1, 2024

PROJECT DESCRIPTION

On behalf of Highstreet Ventures, Kaidence Advisors ("the Applicant") has filed for a rezone from its current obsolete zoning of CC to MF-2 and a site plan approval ("Applications") for the approximate 17.89 acres generally located at the northeast corner of Verrado Way and West Fillmore, APN: 502-35-836. Approval of these requests will support the development of the subject property into a 510-unit garden style multi-family community project.

The proposed community will include nine garden style residential buildings all three stories in height and one amenity clubhouse building. The proposed density is 28.5 dwelling units per acre and will meet or exceed the City of Buckeye requirements for parking, open space, landscape, shading, lighting, green energy, height and density requirements.

The project will be designed and constructed with a focus on minimizing energy consumption through better technology, airtightness, a highly efficient building envelope, additional insulation and no burning of carbon for heating so the entire community has a carbon free footprint. Previous Highstreet communities use 75% less energy than the building code minimum. This community will also incorporate extensive solar and electric vehicle charging stations, far exceeding any building code minimums.

INITIAL PUBLIC NOTIFICATION & NEIGHBORHOOD MEETINGS

In order to notify interested parties that the applications were made, an initial notification letter was mailed via first class mail to adjacent property owners within 300-feet of the subject property. A list of notification letter recipients within 300-feet of the subject property is enclosed with this Citizen Participation Plan Report. Additional stakeholders requiring notification, such as interested parties who have submitted a request to the City to be notified of any rezoning, adjacent political jurisdictions and public agencies with jurisdiction over the subject property, have not been identified by the Applicant at this time.

The initial notification letter contained details regarding the application request, as well as information regarding the neighborhood meeting, which allowed interested parties to express any concerns, issues or problems that they may have with the applications in advance of the public hearings. A copy of the notification letter is enclosed with this Citizen Participation Plan Report.

A neighborhood meeting was held on August 28, 2024 at the Summit Community Church. There were representatives from the applicant and the City of Buckeye in attendance, but no neighbors were in attendance. No communication from adjacent property owners or interested parties were received regarding the proposed development.

PUBLIC HEARING NOTIFICATION

Upon the scheduling of any public hearing and no later than 15 calendar days prior to its occurrence, the Applicant shall arrange for proper notification of said hearing(s), as outlined in Section 8.2.6 and Table 8.2-1 of the Development Code. Specifically, the following notification efforts are planned:

1. Mailed notice (via first class mail) to adjacent property owners within 300-feet of the subject property,
2. Published notice within a widely circulated newspaper throughout the City (i.e. The Arizona Republic), and
3. Sign postings adjacent to the public rights-of-way.

A copy of the draft public hearing notification letter, format for publication and sign posting, including approximate locations of the sign postings, are enclosed with this Citizen Participation Report for City staff's review and approval.

Upon completion of the above-mentioned notification requirements, an Affidavit of Mailing, Proof of Publication and an Affidavit of Posting shall be submitted to the assigned Planner not less than 10 calendar days prior to the first public hearing. In addition, a Citizen Participation Report will be prepared and submitted to the assigned Planner prior to the first public hearing, which will summarize the results of the Applicant's citizen participation efforts.

OVERALL CITIZEN PARTICIPATION TIMELINE

In accordance with the City's Rezoning Process Guides & Applications, the applications will be processed concurrently (or staggered with rezone approval first) and will progress through a sequence of process milestones. The development team has established some tentative milestone dates to ensure compliance with the City's rezoning application processes, while properly managing each of the process milestones. The milestones and tentative process dates are as follows:

Formal First Submittal:	Friday, July 12, 2024 (COMPLETE)
City 1st Review Period Complete:	Monday, August 12, 2024 (COMPLETE)
Neighborhood Meeting:	Wednesday, August 28, 2024 (COMPLETE)
Applicant Rezone Resubmittal:	Friday, September 6, 2024
Applicant Site Plan Resubmittal:	Friday, September 13, 2024
City 2nd Review Period Complete:	Friday, October 4, 2024
Staff Approves Applications:	Friday, October 11, 2024
Public Notification:	15 Days Prior to Hearing
Development Services Staff Report:	TBD

P&Z Commission Public Hearing:	November 12,2024
City Council Hearing:	December 17, 2024

COMMUNICATION WITH ASSIGNED PLANNER

Throughout the citizen participation process, the Applicant will communicate directly, via e-mail or phone, with the assigned project Planner to keep them informed of the status of citizen participation efforts on an as-needed basis. As noted above, a Citizen Participation Report will be prepared and submitted to the assigned Planner prior to the first public hearing. The Citizen Participation Report will document the results of the outreach efforts and include the following items:

- Neighborhood meeting information, including the date and location of the meeting, date and contents of the notification mailing, list of notified property owners, copy of the sign-in sheet, meeting notes, etc.
- Public hearing notification information, including date and contents of the notification mailing, photographs of the sign postings and newspaper clipping of the legal advertisement, and;
- Summary of concerns, issues, and problems, as well as how they were addressed by the applicant.

DRAFT INITIAL NOTIFICATION DOCUMENTS

The following pages include:

1. Final neighborhood meeting notification letter sent to adjacent property owners, approved by staff.
2. List of property owners to be contract, including parcel numbers, owners' names and tax billing addresses

West Fillmore Highstreet
1st Submittal
PLZM-24-0040
PLZSP-24-0017

FINAL NEIGHBORHOOD MEETING NOTIFICATION LETTER

August 13, 2024

RE: CASE #PLZZ-24-0009– WEST FILLMORE HIGHSTREET

Dear Property Owner:

The purpose of this letter is to inform you that, on behalf of Highstreet Ventures, Kaidence Advisors has recently filed a request for Rezone (Case # PLZZ-24-009) with the City of Buckeye Development Services Department for the approximately 17.89-acre property generally located at the northeast corner of Verrado Way and Fillmore Street. This application is intended (to rezone from the current obsolete zoning of CC to MF-2 for a future garden style multi-family community.

As required by the City of Buckeye Development Code, this letter is being sent to you because property ownership listed in your name is located within the notice area. We would like to invite you to a neighborhood meeting to discuss these requests. The neighborhood meeting has been scheduled as follows:

Neighborhood Meeting:

Date:	Wednesday, August 28, 2024
Time:	6:00 p.m.
Location:	Summit Community Church 20555 W. Roosevelt Street Buckeye, AZ 85326 ROOM: The Lounge

You are welcome to participate in this meeting to learn more about the proposed rezoning and site plan approval requests. If you are unable to attend or would like to discuss this project in advance of the meeting, please feel free to contact me directly via e-mail to krounds@kaidencegrp.com or 480-269-6613. You may also contact Senior Planner, Mandy Woods, with the City of Buckeye Planning and Zoning Division at 623-640-6093 or via e-mail to swoods@buckeyeaz.gov.

Please be advised that meetings and hearings before the Planning & Zoning Commission and City Council are planned to review this case. Specific meeting and hearing dates have not yet been scheduled. You should receive a subsequent notice identifying the date and location of the meeting/hearings when they have been scheduled.

Sincerely,

Katie Rounds
Principal
Kaidence Advisors

FINAL NEIGHBORHOOD MEETING NOTIFICATION LETTER ATTACHMENTS

VICINITY MAP & SITE PLAN





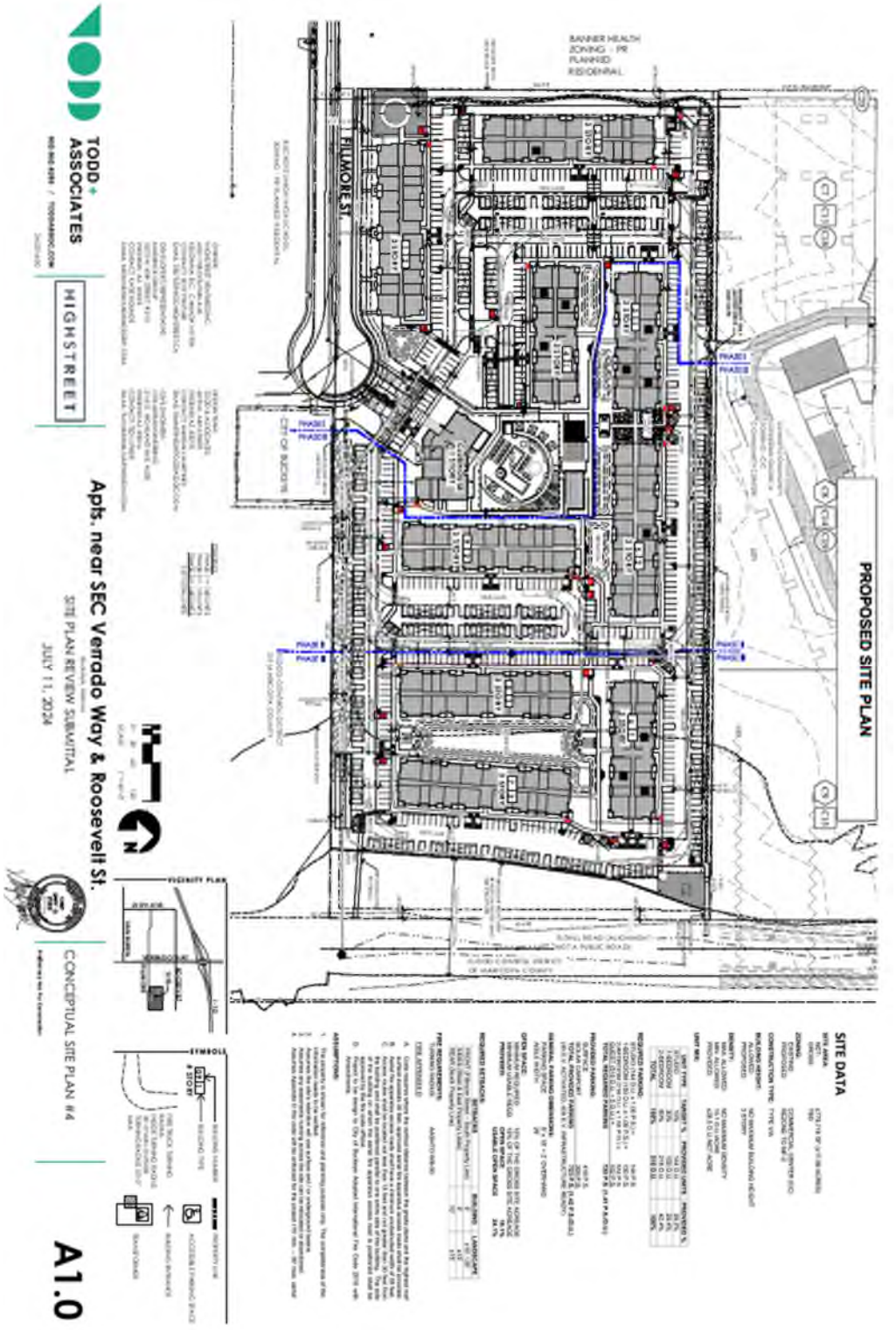
TODD + ASSOCIATES
HIGHSTREET
Apts. near SEC Verrado Way & Roosevelt St.
SITE PLAN REVIEW SUBMITTAL
JULY 11, 2024
CONCEPTUAL SITE PLAN #4
A1.0
PROPOSED SITE PLAN
SITE DATA
FILLMORE ST
CITY OF BUCKEYE
BANNER HEALTH
ZONING - PR
PLANNED
RESIDENTIAL
PHASE 1
PHASE 2
PHASE 3
PHASE 4
PHASE 5
VICINITY PLAN
SYMBOLS
ASSUMPTIONS

300' NOTIFICATION MAP & OWNERSHIP LIST

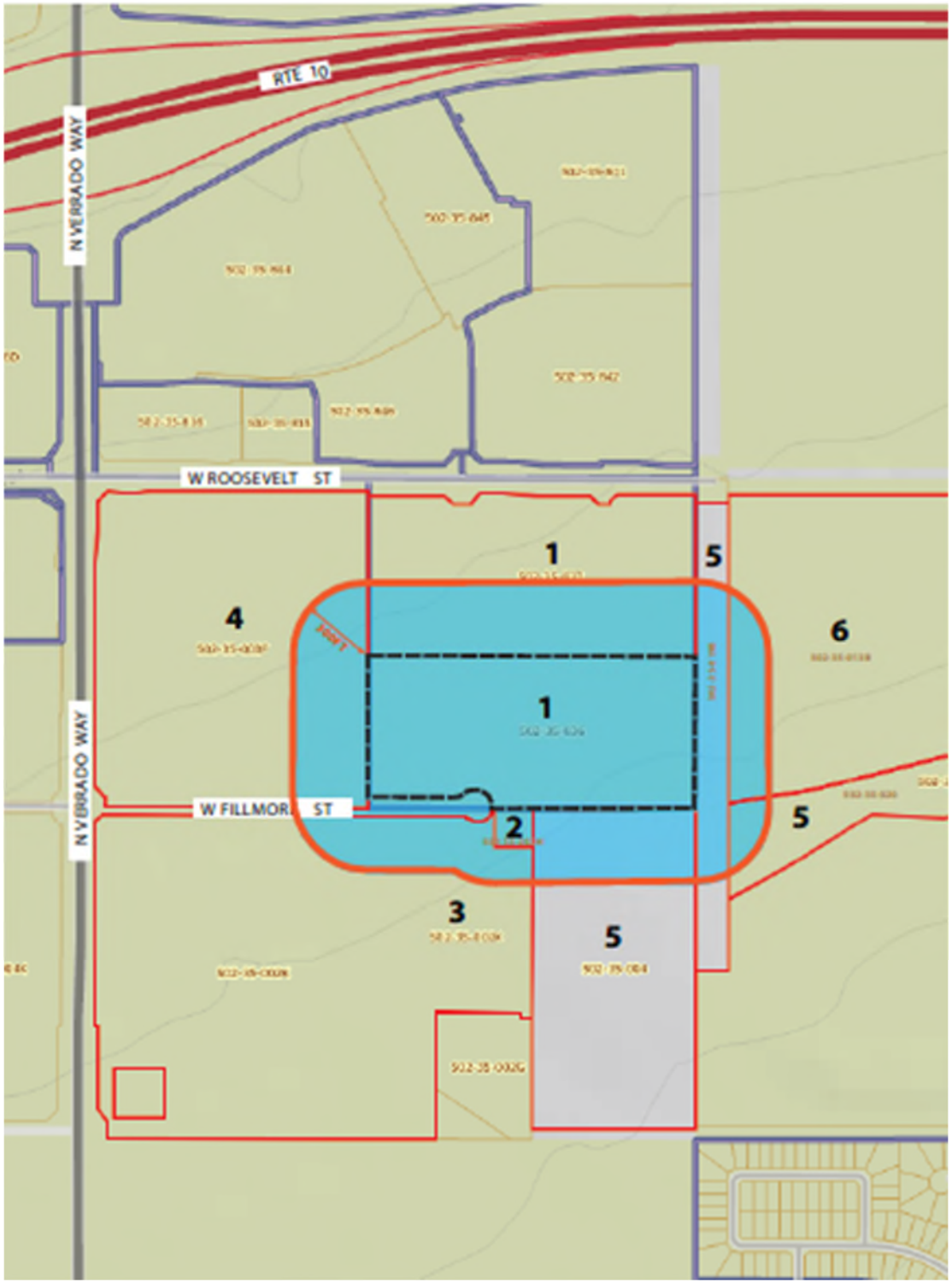

	QMS 24-168 **OWNERSHIP LIST** **JULY 08 2024** **PAGE 1**	
1) 502-35-(836, 837) SUMMIT COMMUNITY LUTHERAN CHURCH 14545 W INDIAN SCHOOL RD STE 900 GOODYEAR AZ 85395	2) 502-35-002H BUCKEYE CITY OF 530 E MONROE AVE BUCKEYE AZ 85326	3) 502-35-002K BUCKEYE UNION HIGH SCHOOL DIST 201 1000 E NARRAMORE AVE BUCKEYE AZ 85326
4) 502-35-003F BANNER HEALTH 2901 N CENTRAL AVE 160 PHOENIX AZ 85012	5) 502-35-(004, 019B, 020) FLOOD CONTROL DISTRICT OF MARICOPA COUNTY 2801 W DURANGO ST PHOENIX AZ 85009	6) 502-35-013B ROOSEVELT STREET CO LP 8095 OTHELLO AVE SAN DIEGO CA 92111
KATIE ROUNDS KAIDENCE GROUP 5070 N 40TH ST #210 PHOENIX AZ 85018	HIGHSTREET VENTURES INC 602-1708 DOLPHIN AVE KELOWNA BC V1Y 9S4	

West Fillmore Highstreet
1st Submittal
PLZM-24-0040
PLZSP-24-0017

FINAL PUBLIC HEARING NOTIFICATION LETTER

October 24, 2024

RE: CASE #PLZZ-24-0009– WEST FILLMORE HIGHSTREET

Dear Property Owner:

The purpose of this letter is to inform you that, on behalf of Highstreet Ventures, Kaidence Advisors has filed a request for Rezone (Case # PLZZ-24-0009) with the City of Buckeye Development Services Department for the approximately 17.89-acre property generally located at the northeast corner of Verrado Way and Fillmore Street. This application is intended to rezone from the current obsolete zoning of CC to MF-2.

As required by the City of Buckeye Development Code, this Notice is being sent to you because property ownership listed in your name is located within the notice area required. The City of Buckeye has scheduled meetings/hearings to review our cases as follows:

Planning and Zoning Commission:
Date: November 12, 2024
Time: 6:00 p.m.
Location: City Council Chambers,
530 E Monroe Avenue
Buckeye, Arizona 85326

City Council:
Date: December 17, 2024
Time: 6:00 p.m.
Location: City Council Chambers
530 E Monroe Avenue
Buckeye, Arizona 85326

You are welcome to attend any or all of these meetings/hearings to learn more about the proposed rezoning request. If you are unable to attend or would like to discuss this project in advance of these meetings, please feel free to contact me directly via e-mail to krounds@kaidencegrp.com. Please confirm the meeting details with the City of Buckeye Planning and Zoning Division before attending as they are subject to change. You may also contact Senior Planner, Mandy Woods, with the City of Buckeye Planning and Zoning Division at 623-640-6093 or via e-mail to swoods@buckeyeaz.gov.

Sincerely,

Katie Rounds
Principal
Kaidence Advisors

FINAL PUBLIC HEARING NOTIFICATION LETTER ATTACHMENTS





West Fillmore Highstreet
1st Submittal
PLZM-24-0040
PLZSP-24-0017

FINAL PUBLISHED NOTIFICATION LANGUAGE

The following was submitted to LocaliQ Arizona GANNETT for publication in the West Valley Republic and at azcentral.com:

PUBLISHED ON 10/23/2024

NOTICE IS HEREBY GIVEN that the City of Buckeye Planning and Zoning Commission will hold a public hearing on Monday, November 12, 2024 to be held at the City Council Chambers, located at 530 E Monroe Avenue at 6:00 p.m., for the purpose of hearing all persons for or against the following request:

Case No. PLZZ-24-0009: Request by Kaidence Advisors, on behalf of Highstreet Ventures, for the approval of a rezone from the current obsolete zoning of CC to MF for the proposed development located generally at the northeast corner of Verrado Way and Fillmore Street (APN: 502-35-836).

For additional information, you may also contact Senior Planner, Mandy Woods, with the City of Buckeye Planning and Zoning Division at 623-640-6093.

TO BE PUBLISHED ON 11/30/2024

NOTICE IS HEREBY GIVEN that the City of Buckeye City Council will hold a public hearing on Tuesday, December 17, 2024 to be held at the City Council Chambers, located at 530 E Monroe Avenue at 6:00 p.m., for the purpose of hearing all persons for or against the following request:

Case No. PLZZ-24-0009: Request by Kaidence Advisors, on behalf of Highstreet Ventures, for the approval of a rezone from the current obsolete zoning of CC to MF for the proposed development located generally at the northeast corner of Verrado Way and Fillmore Street (APN: 502-35-836).

For additional information, you may also contact Senior Planner, Mandy Woods, with the City of Buckeye Planning and Zoning Division at 623-640-6093.

LocaliQ
Arizona
GANNETT

Order Confirmation
Not an Invoice

Account Number:	1387286
Customer Name:	City Of Buckeye/Legal Advertising
Customer Address:	City Of Buckeye/Legal Advertising 530 E Monroe AVE Attn: Summer Stewart Buckeye AZ 85326-2806
Contact Name:	City Of Buckeye/Legal Advertising
Contact Phone:	
Contact Email:	
PO Number:	PLZZ-24-0009

Date:	10/18/2024
Order Number:	10689060
Prepayment Amount:	$ 0.00

Column Count:	1.0000
Line Count:	22.0000
Height in Inches:	0.0000

Print

Product	#Insertions	Start - End	Category
PNI West Valley Republic	1	10/23/2024 - 10/23/2024	Govt Public Notices
PNI azcentral.com	1	10/23/2024 - 10/23/2024	Govt Public Notices

As an incentive for customers, we provide a discount off the total order cost equal to the 3.99% service fee if you pay with Cash/Check/ACH. Pay by Cash/Check/ACH and save!

Total Cash Order Confirmation Amount Due	$7.70
Tax Amount	$0.00
Service Fee 3.99%	$0.31
Cash/Check/ACH Discount	-$0.31
Payment Amount by Cash/Check/ACH	$7.70
Payment Amount by Credit Card	$8.01

Order Confirmation Amount	**$7.70**

1/2

LocaliQ
Arizona
GANNETT

Order Confirmation
Not an Invoice

Account Number:	1493802
Customer Name:	Highstreet Ventures Inc
Customer Address:	Highstreet Ventures Inc 5070 N 40Th ST # 210 Phoenix AZ 85018-2135
Contact Name:	Katie Rounds
Contact Phone:	
Contact Email:	krounds@kaidenceadvisors.com
PO Number:	PLZZ-24-0009

Date:	10/28/2024
Order Number:	10712326
Prepayment Amount:	$ 0.00

Column Count:	1.0000
Line Count:	21.0000
Height in Inches:	0.0000

Print

Product	#Insertions	Start - End	Category
PNI West Valley Republic	1	11/30/2024 - 11/30/2024	Govt Public Notices
PNI azcentral.com	1	11/30/2024 - 11/30/2024	Govt Public Notices

As an incentive for customers, we provide a discount off the total order cost equal to the 3.99% service fee if you pay with Cash/Check/ACH. Pay by Cash/Check/ACH and save!

Total Cash Order Confirmation Amount Due	$71.57
Tax Amount	$0.00
Service Fee 3.99%	$2.86
Cash/Check/ACH Discount	-$2.86
Payment Amount by Cash/Check/ACH	$71.57
Payment Amount by Credit Card	$74.43

Order Confirmation Amount	**$71.57**

1/2

FINAL PUBLIC HEARING SIGN LANGUAGE

City of Buckeye

PUBLIC HEARING

Planning and Zoning Commission: [Date and Time]
City Council: [Date and Time]
LOCATION OF HEARINGS:
City Council Chambers
530 E Monroe Avenue
Buckeye, Arizona 85326

REQUEST: Rezoning

PROPOSAL: Rezone from the current obsolete zoning of CC to MF-2 for the proposed development located generally at the northeast corner of Verrado Way and Fillmore Street (APN: 502-35-836).

GENERAL LOCATION: Northeast corner of Verrado Way & Fillmore Street
SIZE: +/- 17.89 Acres
CASE #: PLZZ-24-0009

APPLICANT/CONTACT: Katie Rounds, Kaidence Advisors
PHONE: 602-330-5114

Development Services Department: 623-640-6093
Posting Date: 10/23/2024

FINAL PUBLIC HEARING SIGN LOCATIONS





AFFIDAVIT OF SIGN POSTING
City of Buckeye

Case No: PLZZ-24-0009
Project Name:
Applicant Name: Kaidence
Location: E of the NEC Verrado Way and W Fillmore St

In order to assist in providing adequate notice to interested parties and to meet Arizona State Statue, the **applicant** for public hearing in the City of Buckeye shall post signs as Prescribed by the "City of Buckeye Site Posting Requirements." **It shall be the responsibility of the applicant to erect and to maintain the sign on the subject property and to update the hearing information on the sign until the final disposition of the case. It shall also be the responsibility of the applicant to remove the sign within 10 days after final disposition of the case.**

I confirm that the site has been posted as detailed by the City of Buckeye Site Posting Requirements for the case above and the site was posted at least fifteen (15) prior to the public hearing.

Applicant's/Representative's signature: Meghan Liggett

SUBSCRIBED AND SWORN before me on 10/23/24

Notary Public: MaryBeth Conrad

MARYBETH CONRAD
Notary Public - Arizona
Maricopa County
Commission # 591461
My Comm. Expires Oct 25, 2024

My Commission Expires: 10-25-24

West Fillmore Highstreet Multi-Family Rezone

PLZZ-24-0009

City Council – December 17, 2024

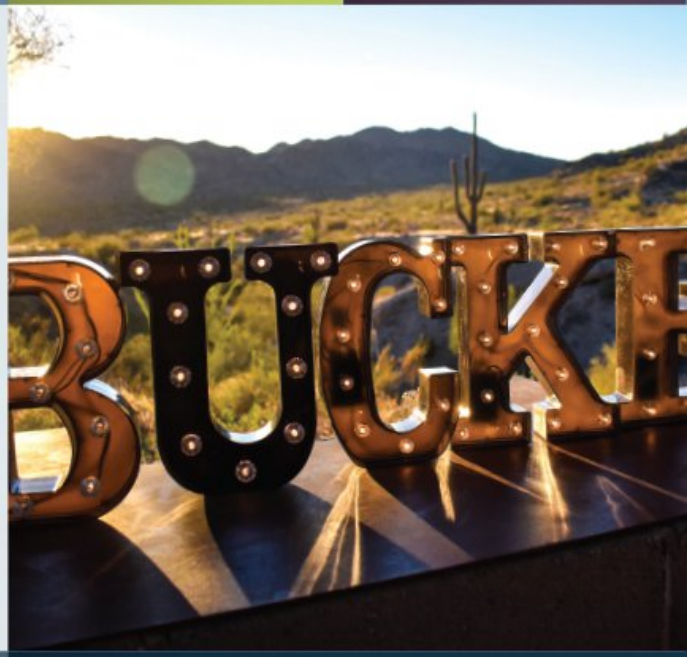

BUCKEYE, AZ

buckeyeaz.gov

Project Overview

- Applicant: Katie Rounds (Kaidence Group) on behalf of Highstreet Ventures, Inc. / Highstreet West Fillmore (2024) Apartments Ltd. (developer and new owner)
- Location: 1000’ east of the NEC of Verrado Way & Fillmore St
- Request: Rezone from Commercial Center (CC) to Multi-Family 2 (MF-2)
- Size: 17.89 acres

Site Context

- Subject Property: Vacant
- North: Summit Community Church
- South: Vacant
- East: Vacant
- West: Vacant (anticipated future mixed-use commercial and multi-family residential)



The Landing

- Land Use: Activity Center
- Specific Area Plan, “The Landing”
  - Employment, educational, and entertainment hub serving the greater West Valley region offering diverse living opportunities
- Proposed use and zoning is consistent with the vision of The Landing

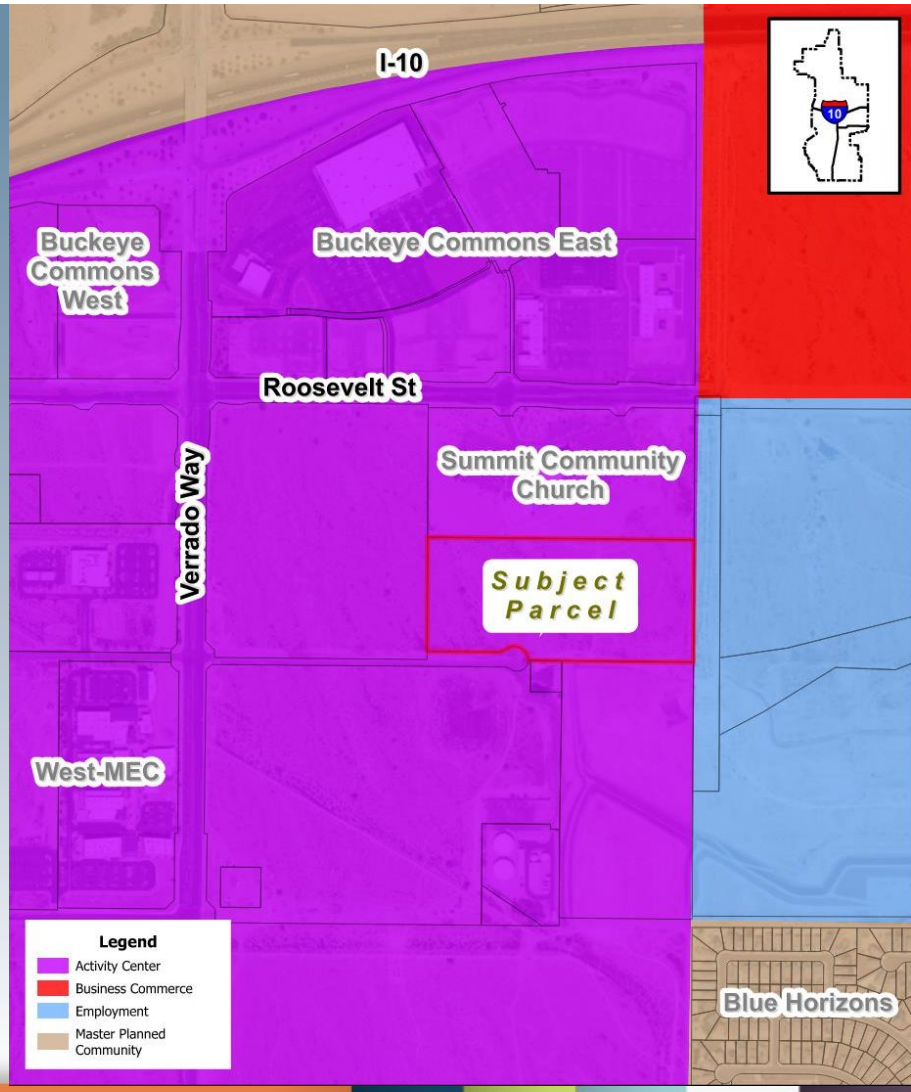

Zoning

- Existing Zoning: Commercial Center (CC)
- Proposed Zoning: Multi-Family 2 (MF-2)

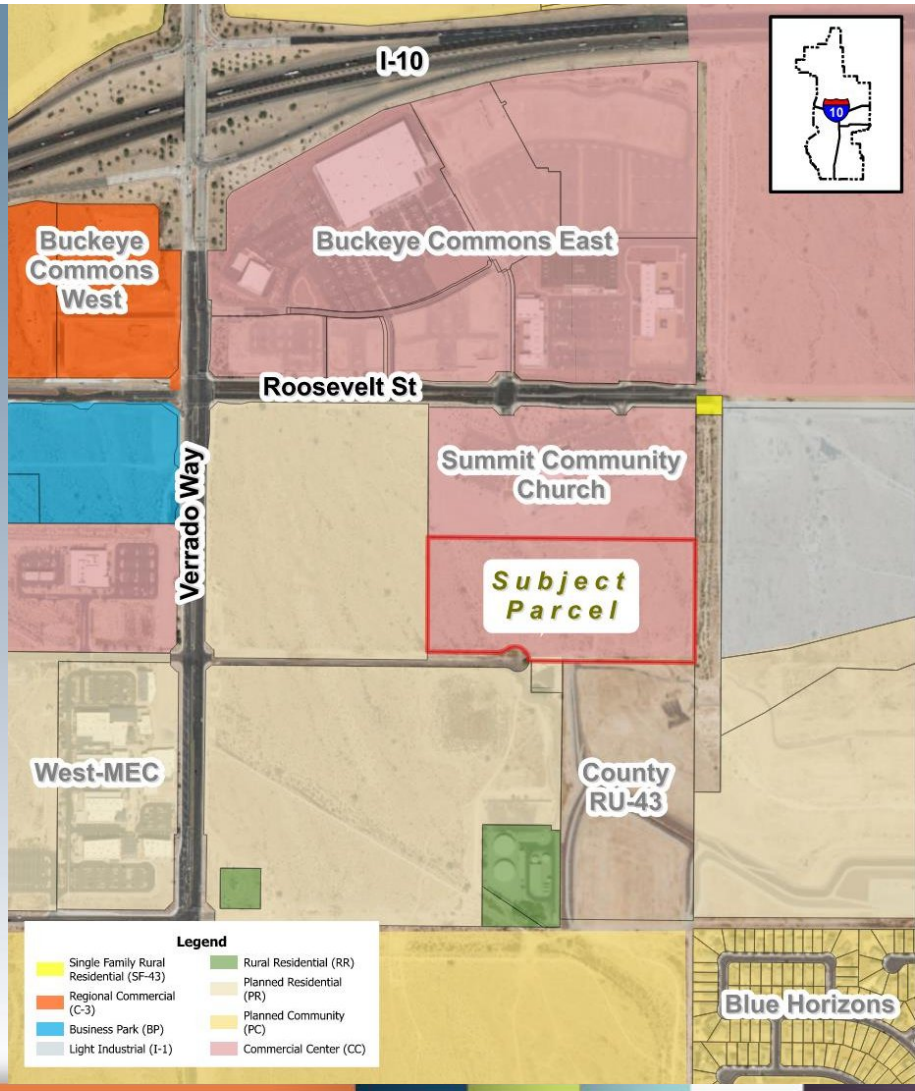

Public Participation

- Neighborhood meeting: August 28, 2024 at 6PM, held at Summit Community Church
- Legal Notice: November 30, 2024
- Site Posting: October 23, 2024
- Mailing Notice: October 24, 2024
- No public comments received to date

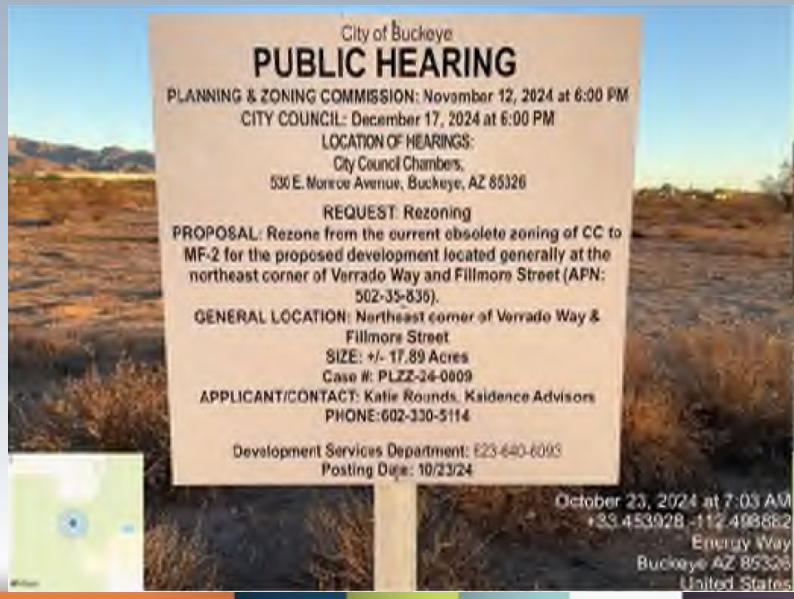

Future Development & Infrastructure

- Pending Site Plan review for a 510-unit multi-family residential community
  - Proposed density: 28.5 du/ac
- Developer to complete transportation, water, and sewer infrastructure improvements, as determined by Site Plan approval

School Impact

- Notice to Buckeye Union High School District (BUHSD) and Liberty Elementary School District (LESD) sent; donation agreements between developer and districts pending.

Recommendation

- Conduct a public hearing
- Adopt Ordinance No. 29-24, approving PLZZ-24-0009, subject to conditions a) through j), for the following reasons:
  - ✓Furthers goals of the Buckeye General Plan and contributes to a vibrant Buckeye Gateway Activity Center (aka The Landing) with residential density appropriate to an Activity Center
  - ✓Conforms to the Buckeye Development Code
  - ✓Consistent with Luke Graduated Density Concept (GDC) and Gateway Activity Center Area GDC Policy
  - ✓No outstanding issues from reviewing departments

WHEN RECORDED, RETURN TO:

City of Buckeye
ATTN: City Clerk, Lucinda J. Aja
530 East Monroe Avenue
Buckeye, Arizona 85326

ORDINANCE NO. 29-24

AN ORDINANCE OF THE MAYOR AND CITY COUNCIL OF THE CITY OF BUCKEYE, ARIZONA, AMENDING THE ZONING MAP OF THE CITY OF BUCKEYE FOR APPROXIMATELY 17.89 ACRES OF LAND LOCATED APPROXIMATELY 1000 FEET EAST OF THE NORTHEAST CORNER OF NORTH VERRADO WAY AND WEST FILLMORE STREET, FROM COMMERCIAL CENTER (CC) TO MULTI-FAMILY 2 (MF-2).

WHEREAS, by adoption of this Ordinance, the City Council desires to amend the Zoning Map of the City of Buckeye by changing the zoning of approximately 17.89 acres of land located approximately 1000 feet east of the northeast corner of north Verrado Way and west Fillmore Street, from Commercial Center (CC) to Multi-Family 2 (MF-2); and

WHEREAS, all required notices of the public hearings scheduled on this zoning request were provided pursuant to the Development Code of the City of Buckeye and State law; and

WHEREAS, the City of Buckeye Planning & Zoning Commission held a public hearing on November 12, 2024, and recommended approval of this zoning change subject to conditions; and

WHEREAS, in accordance with Article II, Sections 1 and 2 of the Constitution of Arizona, the Council has considered the individual property rights and personal liberties of the residents of the City before adopting this ordinance; and

WHEREAS, the recommended zoning changes are in conformity with the General Plan.

NOW THEREFORE BE IT ORDAINED, by the Mayor and City Council of the City of Buckeye, Arizona, as follows:

Section 1. The foregoing recitals are incorporated as if fully set forth herein.

Section 2. The Zoning Map of the City of Buckeye is hereby amended by changing approximately 17.89 acres of land, as legally described and depicted in **Exhibit A** attached hereto and incorporated herein by reference, (the "Property") from Commercial Center (CC) to Multi-Family 2 (MF-2).

Section 3. All present and future owners of the Property shall develop the Property in accordance with the requirements of the "West Fillmore Highstreet Project Narrative" revised September 6, 2024, a copy of which is on file in the office of the City Clerk, as provided in **Exhibit B** attached hereto; and in accordance with conditions (a) through (j), as set forth in **Exhibit C** attached hereto.

Section 4. The Mayor, the City Manager, the City Attorney, and City Clerk are hereby authorized and directed to take all steps and execute all documents necessary to carry out the purpose and intent of this Ordinance.

PASSED AND ADOPTED by the Mayor and City Council of the City of Buckeye, Arizona, this 17th day of December, 2024.

_____
Eric W. Orsborn, Mayor

ATTEST:

_____
Lucinda J. Aja, City Clerk

APPROVED AS TO FORM:

_____
K. Scott McCoy, City Attorney

EXHIBIT A

Legal Description and Depiction of the Land

(Consisting of 3 pages)

FILLMORE BUCKEYE MULTI-FAMILY
LOT 1
LEGAL DESCRIPTION

Lot 1 as defined by the Minor Land Division of Summit Community Church Phase 1 recorded in Book 1441, Page 8, Records of Maricopa County, Arizona, lying within the Southeast Quarter of Section 6, Township 1 North, Range 2 West of the Gila and Salt River Meridian, Maricopa County, Arizona, being more particularly described as follows:

COMMENCING at the Southwest corner of said Minor Land Division, marked by a found rebar with cap, RLS 48078 from which the centerline intersection of Verrado Way and West Fillmore Street, marked by a found 3" Town of Buckeye brass cap in hand hole, thereof bears North 89°25'31" West, 1166.33 feet;

THENCE North 00°20'39" East, 40.00 feet on the westerly boundary of said Minor Land Division to the Southwest corner of said Lot 1, being the **POINT OF BEGINNING;**

THENCE Continuing on said westerly boundary, North 00°20'39" East, 567.07 feet to the northwest corner of said Lot 1;

THENCE South 89°25'30" East, 1320.89 feet on the northerly boundary of said Lot 1 to the northeast corner thereof;

THENCE South 00°17'54" West, 607.07 feet on the easterly boundary of said Lot 1 to the Southeasterly corner thereof;

THENCE on the southerly boundary of said Lot 1 the following 4 courses:

THENCE North 89°25'31" West, 822.30 feet to a non-tangent curve, concave southwesterly, having a radius of 70.00 feet, the center of which bears South 89°57'47" West;

THENCE northwesterly on said curve, through a central angle of 127°09'54", an arc length of 155.36 feet to a reverse curve, concave northwesterly, having a radius of 70.00 feet;

THENCE southwesterly on said curve, through a central angle of 37°44'36", an arc length of 46.11 feet to a line parallel with and 40.00 feet north of the southerly boundary of said Minor Land Division;

THENCE along said parallel line, North 89°25'31" West, 343.53 feet to the **POINT OF BEGINNING**.

The above described parcel contains a computed area of 779,791 sq. ft. (17.9016 acres) more or less.

Subject to any easements, restrictions, rights-of-way of record or otherwise.

The description shown hereon is not to be used to violate any subdivision regulation of the state, county and/or municipality or any land division restrictions.

Prepared by: HILGARTWILSON, LLC
2141 E. Highland Avenue, Suite 250
Phoenix, AZ 85016
Project No. 2646
Date: July 2024



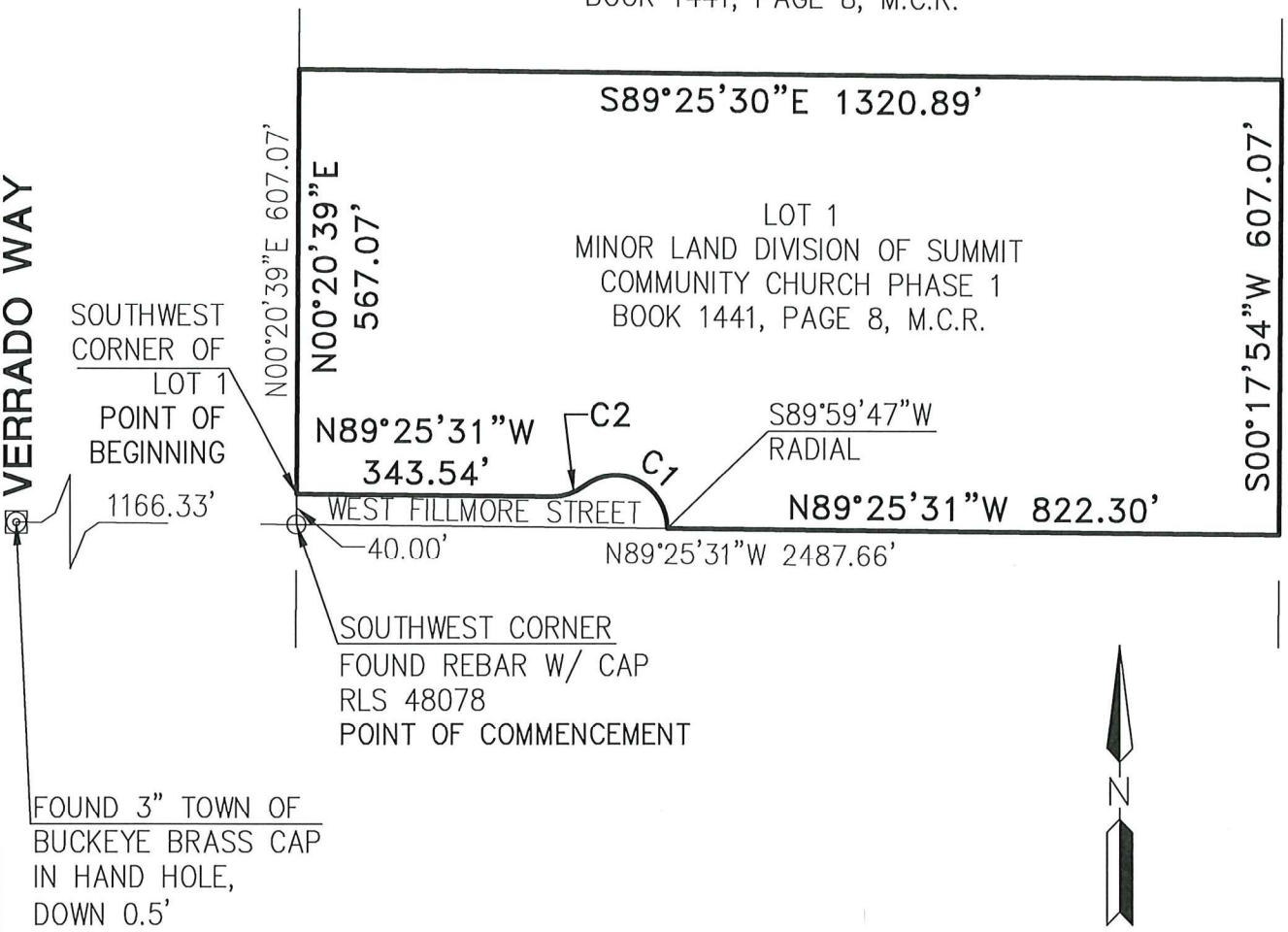

CURVE TABLE			
CURVE NO.	RADIUS	DELTA	LENGTH
C1	70.00'	127°09'54"	155.36'
C2	70.00'	37°44'36"	46.11'

REGISTERED LAND SURVEYOR
CERTIFICATE NO.
48078
PHIL
REIMER
Date Signed 2024.10.2
ARIZONA, U.S.A.
Expires 6/30/2026

PROJ.NO.:	2646
DATE:	JULY 2024
SCALE:	N.T.S.
DRAWN BY:	JK
CHECKED BY:	PR

FILLMORE BUCKEYE MULTI-FAMILY
LOT 1
BUCKEYE, ARIZONA

EXHIBIT

HILGARTWILSON
2141 E. HIGHLAND AVE., STE. 250
PHOENIX, AZ 85016
P: 602.490.0535 / F: 602.368.2436

©2024, HILGARTWILSON, LLC

U:\2600\2646\SURVEY\DOCS\LEGAL\2646-LOT 1-EXHIBIT.dwg 7/10/2024 2:22 PM

EXHIBIT B

West Fillmore Highstreet Project Narrative

(On file with the City of Buckeye City Clerk's Office)

EXHIBIT C

Conditions of Approval

Planning Division Conditions – Standard/General

a) The property owner/s and their successor waive any and all claims for diminution in value of the property with regard to any action taken by City of Buckeye as result of this approval.

Fire Department Conditions – Standard/General

b) The Buckeye Fire Chief and City Engineer shall determine the number, location, and types of all fire hydrants.

c) Prior to delivery of any combustible materials to the site, a fire protection system approved by the Buckeye Fire Marshal shall be completely operational.

d) All buildings shall be equipped with a fire protection system as required by City of Buckeye Ordinance 03-22.

e) Where two fire apparatus access roads are required, they shall be placed a distance apart equal to not less than one half of the length of the maximum overall diagonal dimension of the lot or area to be served, measured in a straight line between accesses.

Public Works Conditions – Standard/General

f) All landscaped areas within the public rights of way shall be designed and sealed by a landscape architect licensed by the Arizona Board of Technical Registration. The City Public Works Department shall review all irrigation plans for material selection only; therefore, the landscape architect shall coordinate with the Public Works Department early in the design to ensure the most efficient means of landscape irrigation that will reduce both long term maintenance costs and keep watering to the absolute minimum required for healthy growth of landscaping along the roadways of the City of Buckeye.

g) No new natural turf shall be installed in a public right-of-way or median. Areas with up to 10,000 square feet of turf within a public right-of-way at gateways, entrances to major communities, or special landscaping designs approved by the city's development services department are exempt from the restrictions of this stipulation.

h) Plant material within the right-of-way shall not obstruct any regulatory signage or sight distance triangle as defined in the Engineering Development Standards.

i) The following trees are prohibited from any landscaping plans in accordance with Chapter 9 of City Code (Section 9-10): Male Mulberry Tree (Morus Alba), Olive Tree (Olea Europea). Additionally, North Indian Rosewood Trees (Dalbergia Sissoo) shall not be planted within the rights of way (and are suggested not being planted within the property) due to their destructive and invasive root structure.

j) Storm Drainage: The City of Buckeye is permitted as a Phase 2 MS4 and is now subject to more stringent standards for stormwater discharge. All stormwater plans must now meet the requirements of the City of Buckeye's MS4 permit as issued by ADEQ (Permit Number AZG2016-002).