AMENDED
BURBANK CITY COUNCIL
JOINT MEETING WITH THE PARKING AUTHORITY
AND THE POLICE COMMISSION
TUESDAY, OCTOBER 14, 2025
4:00 p.m. – Closed Session
4:30 p.m. – Study Session
6:00 p.m. – Open Session
Council Chamber
275 E. Olive Avenue, Second Floor
***Updated due to removal of Closed Session Item #2**

NOTICE TO THE PUBLIC

NOTICE IS HEREBY GIVEN that a Joint City Council Meeting will be held in the Council Chamber – 275 East Olive Avenue, Second Floor, on Tuesday, October 14, 2025, at 4:00 p.m., to discuss matters on the attached agenda.

Members of the public have the option to participate in the meeting via in-person and/or telephonically for Closed Session, General Public Comment, Public Hearings, and Study Sessions. They may also submit their written comments regarding City business using the eComment feature on the City website, or by emailing the City Council directly at citycouncil@burbankca.gov.

Auxiliary aids and services are available for individuals with speech, vision, or hearing impairments (48-hour notice is required). For more information, please contact the ADA Coordinator at (818) 238-5051.

Interpretation Requests:
If you would like to participate in Public Comments and require an interpreter, please telephone the City Clerk's Office at (818) 238-5851 at least 48 hours in advance of the meeting.

Si desea participar en los comentarios públicos y necesita un intérprete, por favor llame a la Oficina de la Secretaria Municipal al (818) 238-5851 al menos 48 horas antes de la reunión.

Եթե ցանկանում եք մասնակցել հանրային մեկնաբանություններին և թարգմանիչ եք պահանջում, խնդրում ենք զանգահարել քաղաքապետարանի գրասենյակ՝ (818) 238-5851 հեռախոսահամարով հանդիպումից 48 ժամ առաջ:

How to View the Meeting:
Local Cable: Spectrum Channel 6 or AT&T Uverse Channel 99.
YouTube Live Streaming Channel: Click here.
City Website Live Streaming: Click here.

Public Comment Options:

1. To speak during Closed Session Public Comment, General Public Comment, Public Hearing Public Comment, and Study Session Public Comment periods during the meeting, members of the public may speak in-person in the Council Chamber or call (818) 238-3335. Speaker time limits will be determined by the Presiding Officer, depending on how many public comment cards are received and how many callers are in the queue at the commencement of each public comment period (as shown below). Additional public comment cards and calls will not be accepted once the public comment period commences.
    - 1 – 20 Total Speakers – 3 minutes each
    - 21 – 39 Total Speakers – 2 minutes each
    - 40+ Total Speakers – 1 minute each

2. The Reports to Council Public Comment periods are only accepted in person – public comment cards must be submitted before the public comment period begins for each report to Council. Speaker time limits will be determined by the Presiding Officer depending on how many public comment cards have been received at the commencement of each public comment period (as shown below). Additional public comment cards will not be accepted once the public comment period commences.
    - 1 – 20 Total Speakers – 3 minutes each
    - 21 – 39 Total Speakers – 2 minutes each
    - 40+ Total Speakers – 1 minute each

3. eComment will remain open until 3:00 p.m. the day of the meeting.

4. Email the City Council directly citycouncil@burbankca.gov
   Emails received on or before 3:00 p.m. on City Council Meeting Day will be distributed to the City Council in advance of the meeting. Any correspondence received after this time will be distributed the following business day.

5. The Presiding Officer has the discretion to reduce speaking time for each speaker in order to ensure that City business can be completed at a reasonable hour.

Public Disclosure:
Please be advised that any communication submitted to the City of Burbank, its officials, staff or City consultants, may be considered a public record under the Brown Act and California Public Records Act. This means that any information contained in the communication, including personal information, may be subject to public disclosure. The City reserves the right to disclose such information in accordance with the law.

This agenda contains a summary of each item of business which the City Council, Parking Authority and Police Commission may discuss or act on at this meeting. The agenda packet consisting of the staff reports and all other documentation relating to each item on this agenda will be posted on the City's website at www.burbankca.gov. Any writings or documents provided to the City Council regarding any item on this agenda subsequent to distribution of the agenda packet will be posted on the City's website at www.burbankca.gov. If you have a question about any matter on the agenda, please call the Office of the City Clerk at (818) 238-5851. The Council Chamber is disabled accessible. Auxiliary aids and services are available for individuals with speech, vision, or hearing impairments (48-hour notice is required). Please contact the ADA Coordinator at (818) 238-5051 with questions or concerns.

A. **Public Comment**: (On Closed Session items only) To Comment, please telephone into the meeting at (818) 238-3335, or to speak in person a **PINK** Public Comment Card must be completed and presented to the City Clerk prior to the comment period.

B. **Closed Session in City Hall First Floor Conference Room:**
   1. Conference with Legal Counsel - Existing Litigation
      a. Pursuant to Govt. Code §54956.9(d)(1)
      b. Name of Case: Anush Kemdjian v. City of Burbank
      c. Case No.: 25NNCV00700
      d. Brief description and nature of case: Trip and fall

   ~~2. Conference with Real Property Negotiator~~
      a. ~~Pursuant to Govt. Code §54956.8~~
      b. ~~Property: Burbank Town Center - Burbank Center Stage Home of The Colony Theatre - 555 North Third Street, Burbank, CA 91502~~
      c. ~~Parties Whom Agency or City is Negotiating with: Onni Burbank Town Center LLC, 1031 S.~~

~~Broadway, Suite 400, Los Angeles, CA - Peter Park; The Colony Theatre Company, 555 North Third Street, Burbank, CA - Heather Provost~~

d. ~~City Negotiator: Marisa Garcia, Parks and Recreation Director~~

e. ~~Terms Under Negotiation: Terms for 1. Sublease and Master Lease Modification and 2. Operating Agreement~~

C. **Study Session: 4:30 p.m. – 6:00 p.m. – Council Chamber:**

1. Review of Report from the Office of Independent Review Group Monitoring the Burbank Police Department – Police Department (with Police Commission)

   Recommendation:
   Note and file Office of Independent Review Group's Report.

   Study Session Public Comment: To speak in person, a **GREEN** Public Comment Card must be completed and presented to the City Clerk prior to the comment period.

   Council Action:

   Attachments:
   SR - OIR Report 2024
   Att1 - OIR Report
   Att2 - Memo

D. **Call to Order: 6:00 p.m.**

E. **Moment of Reflection:**

F. **Flag Salute:**

G. **Roll Call:**

H. **Announcements:** (The Mayor will make announcements on various topics in addition to any listed)

I. **Council Presentations/Recognitions:** (The Mayor will make presentations to various groups/persons)

1. Presentation of a Proclamation Declaring October 1–31, 2025, as "Domestic Violence Awareness Month" in the City of Burbank – City Council

2. Presentation of a Proclamation Declaring October 19–25, 2025, as "United Against Hate Week" in the City of Burbank – City Council

3. Presentation of Certificates of Recognition to the Participating High Schools of the City of Burbank's 2025 Clerks' Cup – City Council

J. **City Manager Report:** (Updates on Notable Events, if any)

K. **Presentations:**

1. Presentation of a Legislative Update from Assembly Member Nick Schultz – City Manager's Office

2. Presentation of an Update on the City's Preparation for the 2028 Summer Olympics – Parks and Recreation Department

L. **Reporting on Closed Session:** (The City Attorney will report the Closed Session items and report

out actions taken)

M. **Joint General Public Comment:** (On any matter concerning City business and/or any agenda items.) To Comment, please telephone into the meeting at (818) 238-3335 or to speak in person, a **YELLOW** Public Comment Card must be completed and presented to the City Clerk prior to the comment period.)

N. **Council, City Manager, and/or City Attorney Comment:** (Responses to General Public Comment, if any, shall be brief and in accordance with the Ralph M. Brown Act)

O. **Consent Calendar**: (Items on the Consent Calendar are generally routine matters and should be adopted by one motion without an oral report)

1. City Council Minutes – City Clerk's Office

   Recommendation:
   Approve the City Council Minutes of the Joint Meeting of September 30, 2025, and the Dark Meeting of October 7, 2025.

   Attachments:
   City Council Minutes
   Dark Meeting Minutes

2. Parking Authority Minutes – City Clerk's Office

   Recommendation:
   Approve the Parking Authority Minutes of the Joint Meeting of September 9, 2025.

   Attachments:
   Parking Authority Minutes

3. Adoption of a Resolution Amending Fiscal Year 2025-26 Citywide Fee Schedule for the Valet Parking Meter Fee – Community Development Department (with Parking Authority)

   Recommendation:
   Adopt A RESOLUTION OF THE COUNCIL OF THE CITY OF BURBANK AMENDING ARTICLE I, SECTION 14 OF THE FISCAL YEAR 2025-26 CITYWIDE FEE SCHEDULE FOR THE VALET PARKING METER FEE.

   Attachments:
   SR - Valet Parking Meter Fee
   Att1 - Resolution
   Att2 - SR from August 26, 2025

4. Adoption of Resolutions Ratifying and Approving Grant Applications for the Magnolia Power Project with the California Energy Commission for the Bulk Grid Asset Enhancements for the Grid Reliability Program, and Authorizing the BWP General Manager, as the City Manager's Designee, to Negotiate and Execute All Related Agreements and Forms – Burbank Water and Power

   Recommendation:
   1. Adopt A RESOLUTION OF THE COUNCIL OF THE CITY OF BURBANK RATIFYING AND APPROVING GRANT APPLICATIONS FOR THE BULK GRID ASSET ENHANCEMENTS FOR GRID RELIABILITY PROGRAM (ADVANCED GAS PATH RESILIENCY UPGRADE) FOR MAGNOLIA POWER PLANT AT BURBANK WATER AND POWER (BWP), AND AUTHORIZING AND DIRECTING THE BWP GENERAL MANAGER, AS THE CITY MANAGER'S DESIGNEE, TO NEGOTIATE, EXECUTE, AND IMPLEMENT ALL REQUIRED AND RELATED AGREEMENTS AND FORMS WITH THE CALIFORNIA ENERGY COMMISSION, THE SOUTHERN CALIFORNIA PUBLIC POWER AUTHORITY, AND OTHER SUBCONTRACTORS AND VENDORS, SUCH AUTHORITY SUBJECT TO APPROVAL BY THE SOUTHERN CALIFORNIA PUBLIC POWER AUTHORITY OF SUCH PROJECT; and
   2. Adopt A RESOLUTION OF THE COUNCIL OF THE CITY OF BURBANK RATIFYING AND APPROVING GRANT APPLICATIONS FOR THE BULK GRID ASSET ENHANCEMENTS FOR GRID RELIABILITY PROGRAM (ADVANCED COMPRESSOR RESILIENCY UPGRADE) FOR MAGNOLIA POWER PLANT AT BURBANK WATER AND POWER (BWP), AND AUTHORIZING AND DIRECTING THE BWP GENERAL MANAGER, AS THE CITY MANAGER'S DESIGNEE, TO NEGOTIATE, EXECUTE, AND IMPLEMENT ALL REQUIRED AND RELATED AGREEMENTS AND FORMS WITH THE CALIFORNIA ENERGY COMMISSION, THE SOUTHERN CALIFORNIA PUBLIC POWER AUTHORITY, AND OTHER SUBCONTRACTORS AND VENDORS, SUCH AUTHORITY SUBJECT TO APPROVAL BY THE SOUTHERN CALIFORNIA PUBLIC POWER AUTHORITY OF SUCH PROJECT.

   Attachments:
   SR - Grant Applications
   Att1 - Resolution - Gas Path Resiliency
   Att2 - Resolution - Compressor Resiliency
   Att3 - Terms and Conditions
   Att4 - Resolution 2024-001

5. Adoption of a Resolution Authorizing Acceptance of Funds from the State Citizen's Option for Public Safety Program in the Amount of $323,374.11 and Amending the Fiscal Year 2024-25 Budget by Appropriating Funds – Police Department

   Recommendation:
   Adopt A RESOLUTION OF THE COUNCIL OF THE CITY OF BURBANK AUTHORIZING THE CITY MANAGER OR HIS DESIGNEE TO ACCEPT $323,374.11 FROM THE STATE CITIZEN'S OPTION FOR PUBLIC SAFETY (COPS) PROGRAM AND AMENDING THE FISCAL YEAR 2024-25 BUDGET BY APPROPRIATING THE FUNDS.

   Attachments:
   SR - COPS Program
   Att1 - Resolution

6. Adoption of a Resolution Authorizing the City Manager to Approve Workforce Innovation and Opportunity Act Program Agreements with the Verdugo Consortium and the City of Glendale – Library Services Department

Recommendation:
Adopt A RESOLUTION OF THE COUNCIL OF THE CITY OF BURBANK AUTHORIZING THE CITY MANAGER TO APPROVE WORKFORCE INNOVATION AND OPPORTUNITY ACT PROGRAM AGREEMENTS WITH THE VERDUGO CONSORTIUM AND THE CITY OF GLENDALE.

Attachments:
SR - WIOA Program
Att1 - Resolution
Att2 - Agreement

7. Authorize the General Manager of Burbank Water and Power to Enter into an Electrical Services Agreement with SJ4 BURBANK, LLC – Burbank Water and Power

Recommendation:
Approve and authorize the General Manager of Burbank Water and Power to:

1. Execute an Electrical Services Agreement with SJ4 BURBANK, LLC, subject to review and approval by the City Attorney's Office, with reasonable changes in form and substance satisfactory to the City Attorney's Office, if required;
2. Execute any other ancillary documents, including amendments, in form and substance satisfactory to the City Attorney's Office and up to an amount available within any City Council-approved Fiscal Year Budget; and
3. Accept all Aid-in-Construction (AIC) payments needed to provide electric service to the project under this Agreement or any other AIC letters or agreements related to the Project.

Attachments:
SR - Electrical Services Agreement
Att1 - Electrical Services Agreement

P. **Public Hearing:**

1. Acceptance of Public Comment on the Proposed Renewal of the Burbank Tourism Business Improvement District – Community Development Department

Recommendation:
Accept Public Comment on the Proposed Renewal of the Burbank Tourism Business Improvement District.

**** If Additional Documents/Correspondences are submitted for this item, they will be periodically posted to the City website for public viewing. ****

Public Hearing Public Comment: To comment, please telephone into the meeting at (818) 238-3335. To speak in person, a **SALMON** Public Comment Card must be completed and presented to the City Clerk prior to the comment period.

Council Action:

Attachments:
SR - Acceptance of Public Comment for the TBID Renewal
Att1 - SR for Resolution of Intention

Att2 - Signed Petitions
Att3 - Notice of Public Meeting and Public Hearing
Correspondences

Q. **Reports to Council:** (Items listed under this section will have an oral report provided)

1. Appointment to Fill One Vacancy on the Burbank Housing Corporation Board of Directors for a Full Two-Year Term – City Clerk's Office

   Recommendation:
   Appoint one member to the Burbank Housing Corporation Board of Directors to fill a full two-year term ending October 31, 2027.

   Public Comment: To speak in person, a **YELLOW** Public Comment Card must be completed and presented to the City Clerk prior to the comment period.

   Council Action:

   Attachments:
   SR - BHC Vacancy
   Att1 - Applications and Resumes
   Att2 - Redevelopment Agency Resolution R-1878
   Att3 - Housing Authority Resolution H-209

2. Introduction of an Ordinance to Adopt by Reference the 2025 California Building Standards Codes, California Wildland-Urban Interface, City of Burbank Local Amendments, and the 2024 International Property Maintenance Code, and any Amendments thereto, and Adoption of a Resolution Making Express Findings and Determinations that Modifications to the 2025 California Building Standards Code are Reasonably Necessary Due to Local Climatic, Geological, Topographical, or Environmental Conditions – Community Development Department

   Recommendation:
   1. Introduce AN ORDINANCE OF THE COUNCIL OF THE CITY OF BURBANK ADOPTING BY REFERENCE THE 2025 CALIFORNIA BUILDING STANDARDS CODE, CALIFORNIA WILDLAND-URBAN INTERFACE, CITY OF BURBANK LOCAL AMENDMENTS, AND THE 2024 INTERNATIONAL PROPERTY MAINTENANCE CODE, TOGETHER WITH CERTAIN AMENDMENTS, ADDITIONS AND DELETIONS THERETO, AND AMENDING PORTIONS OF TITLE 9 OF THE BURBANK MUNICIPAL CODE.
   2. Adopt A RESOLUTION OF THE COUNCIL OF THE CITY OF BURBANK MAKING EXPRESS FINDINGS AND DETERMINATIONS THAT MODIFICATIONS TO THE 2025 CALIFORNIA BUILDING STANDARDS CODE ARE REASONABLY NECESSARY BECAUSE OF LOCAL CLIMATIC, GEOLOGICAL, TOPOGRAPHICAL, OR ENVIRONMENTAL CONDITIONS.

   Public Comment: To speak in person, a **YELLOW** Public Comment Card must be completed and presented to the City Clerk prior to the comment period.

   Council Action:

   Attachments:
   SR - Building Code Standards
   Att1 - Ordinance
   Att2 - Resolution

Att3 - Resolution, Exhibit A
Att4 - Significant Changes

R. **Council Comments:** (Including reporting on Council committee assignments, attendance at conferences, regional meetings, and community events)

S. **Introduction of Additional Agenda Items:** (Council Members may request future agenda items)

T. **Adjournment**: To Tuesday, October 28, 2025 for a Regular Meeting in the Council Chamber – 275 East Olive Avenue, Second Floor.

STAFF REPORT

CITY MANAGER'S OFFICE

DATE: October 14, 2025

TO: Honorable Mayor, Members of the City Council and
Members of the Police Commission

FROM: Justin Hess, City Manager
Joseph H. McDougall, City Attorney
Rafael Quintero, Chief of Police

SUBJECT: Review of Report from the Office of Independent Review Group Monitoring the Burbank Police Department

---

RECOMMENDATION

Note and file Office of Independent Review Group's Report (Attachment 1).

BACKGROUND

The Office of Independent Review Group (OIR) has served under contract as the "Outside Independent Monitor" of the Burbank Police Department (Department) since 2012. The current agreement was executed in May 2021 following a Request for Proposal process and has a term of five years, expiring in May 2026. The agreement calls for OIR to annually review and report on certain pre-specified types of law enforcement incidents and/or internal affairs investigations, as well as perform other related audit reviews. The purpose of these oversight services is to assess the adequacy of the Department's investigation into an incident and the appropriateness of the findings and action taken by the Department in response to an investigation, and make recommendations as to procedures. OIR is to review and report on the following types of investigations conducted by the Department: all uses of deadly force and in-custody deaths, all bias based policing complaints, all administrative investigations in which the employee under investigation is the rank of sergeant or higher, and a random sample of administrative investigations, citizens' complaints, and use of force reviews. OIR also makes a formal assessment of all vehicle pursuits.

The contractual services also provide that OIR be available to attend Critical Incident Review Board (CIRB) meetings on major incidents, and that OIR receive and review updates on other Department internal review mechanisms, including but not limited to Department's quarterly discipline reports and its annual early intervention audit of high-volume officers in certain key categories. OIR also performs one audit project per year on a revolving list of subjects, such as hiring or promotional processes, performance evaluations, Department in-house training, review of management level emails, body worn and in-car camera program.

Pursuant to the Agreement, OIR presented its report in a joint meeting with the City Manager, City Attorney and Chief of Police. Thereafter, the report is to be presented in a joint public meeting of the City Council and Police Commission.

DISCUSSION

OIR began its formal monitoring of the Department shortly after the Department's adoption of the 2011 Strategic Plan. At that time, the monitoring was considered more remedial in nature. The adoption of the Strategic Plan and outside oversight was partly in response to allegations of excessive use of force and the appointment of new command staff to initiate reforms in the Department.

Since then, OIR's evaluation of the Department's various internal review systems have evolved in scope and complexity. One constant, however, has been OIR's acknowledgment of the Department's willingness to be responsive to new expectations and a commitment to generating its own initiatives in accountability and community outreach.

This report covers incidents that occurred in 2024. OIR evaluated a range of misconduct investigations, critical incidents, use of force incidents, vehicle pursuits, and conducted an evaluation of the Department's Field Training Program. While the report was generally positive, it did identify some individual shortcomings and more general opportunities for improvement among the many cases evaluated.

There are 16 separate recommendations in this report. Attachment 2 is a memo from the Chief of Police outlining the Department's response to the 16 recommendations.

ENVIRONMENTAL REVIEW

This report has no potential for resulting in either a direct physical change in the environment, or a reasonably foreseeable indirect physical change in the environment, and as such, is not a "project" subject to the requirements of the California Environmental Quality Act (CEQA) 14 Cal. Code Regs § 15378.

FISCAL IMPACT

There is no fiscal impact associated with this report.

CONCLUSION

As reflected in both reports, the Department remains committed to accountability, transparency, and ongoing professional development. The Department is actively implementing progressive policing best practices and upholds the highest standards of policing excellence.

ATTACHMENTS

Attachment 1 – Annual Report of the Independent Police Monitor: 2024 Review by OIR Group

Attachment 2 – Memorandum from Burbank Police Chief Rafael Quintero in Response to the OIR Group Recommendations

Burbank Police Department

ANNUAL REPORT OF THE INDEPENDENT POLICE MONITOR: 2024 Review

October 14, 2025

OIR GROUP

562-922-9337

6510 Spring Street #613 | Long Beach, CA
90815

OIRGroup.com

Table of Contents

Introduction 1
Review of Misconduct Investigations 5
Allegations of Biased Policing 8
Effective Engagement with Complainants 10
Improvements to Procedural Review 14
Hands-On / Physical Use of Force 18
Updates in Use of Police Canine 20
Jail Searches 22
Taser Safeguards 23
Review of Vehicle Pursuits 26
Formal Pursuits and the Balance Test 27
Tracking Mode and Assessment Period 28
Communication and Code-3 Driving 31
Recalibration of the “Pursuit Philosophy” 33
Special Project: BPD’s Field Training Program 36
Burbank’s FTO Program: An Overview 39
FTO Selection and Training 39
Trainee Onboarding and Progression 41
Program Structure and Phases 42
Daily Observation Reports 43
End-of-Phase Reports 50
Falling Out: Extending Phases or Separation 52
Wellness and Resilience for FTOs and Trainees 54
BPD Accomplishments 56
Conclusion 58
Recommendations 59

Introduction

This is the latest independent audit report regarding the activities of the Burbank Police Department (BPD). It was prepared by OIR Group, which has a longstanding relationship with the City and which has tracked the steady evolution of BPD's systems for internal review over the course of more than a decade.

As Independent Police Auditors, our role is straightforward: while we do not conduct our own investigations, our scope of work provides us with comprehensive access to a representative sample of completed cases handled internally by BPD. Our review focuses on three critical areas of law enforcement: allegations of officer misconduct, incidents in which physical force was used, and vehicle pursuits.

This model of oversight reinforces the Department's primary responsibility for conducting investigations and ensuring accountability. An agency's own ability to scrutinize itself with rigor, objectivity, and fairness is essential to its operational health and legitimacy. These high standards are difficult to impose externally, and harder to enforce. Accordingly, BPD's own commitment to these processes is of paramount importance.

Although we do not review every case, our annual audit process serves a significant purpose as a check on, and complement to, BPD's internal review. The case files that we do evaluate – and the otherwise confidential evidence that comprises them – offer an open window into BPD's approach to review and provide a transparency that continues to be rare in local law enforcement throughout California. Our annual public reporting amplifies that transparency and adds further accountability to BPD's systems.

Moreover, we are also able to add an outside perspective that allows us to identify potential limitations and to offer recommendations for adjustment and reform. The body of this Report reflects those contributions in what we hope will be a useful way.

As in the past, our scope of work as framed by the City incorporates a review of the completed investigations according to the following parameters:

- All bias-based policing complaints;
- All administrative investigations conducted by the Internal Affairs Bureau in which the subject employee holds the rank of sergeant or higher;
- 1/3 of all administrative investigations conducted by the Internal Affairs Bureau, as randomly selected by OIR Group;
- 1/3 of all citizens' complaints randomly selected by OIR Group (this may include review of both sworn and civilian personnel);
- 1/4 of all use of force reviews randomly selected by OIR Group;
- All vehicle pursuits.

Per the above criteria, we reviewed a total of 21 misconduct investigations. As in the past, we noted several strengths in the Department's process for handling these matters. Body-worn camera recordings continue to have a significant impact on the efficiency and conclusiveness of investigations, and the case memos are quite thorough and methodical in addressing allegations, gathering evidence, and reaching sound dispositions.

We saw examples of uniquely rigorous investigative efforts and again were struck by the Department's willingness to provide complainants with a detailed analysis of the investigation's evidence – well beyond the limited information required by state law for notification. These elements left a favorable impression. However, we discuss a few challenges as well, some of which may be attributable to new personnel in the Internal Affairs unit.

One related to "intake" interviews and a tendency to explain or debate with a member of the public, the complainant, rather than simply hear the person's narrative. And though we found the case outcomes to be reasonable and backed by evidence, there were instances in which officer demeanor detracted from the overall handling of a disputed incident and was not given the attention warranted. We consider complaint cases to be opportunities for improvement as well as "bottom line" accountability and encourage the Department to pursue holistic adjustments to officer performance even when policy violations are not necessarily implicated.

This year's group of force review packages included 22 distinct incidents that included a range of force options. In each case, the force applied was determined to be within policy. BPD's review process – one we have consistently endorsed and even shared with other jurisdictions as a model worth considering – continues to evolve and adjust. Several of these improvements stem directly from our prior recommendations, and we discuss them in detail in this year's report.

Our analysis of this year's use of force cases led to a new series of recommendations focused on enhancing an already strong framework; topics include de-escalation practices, supervisor interviews of subjects, and the evaluation of canine bite incidents. These suggestions are intended to build upon the existing strengths, rather than signal the need for major change. Past experience suggests that BPD recognizes the importance of refining and improving its strong model for review of physical force by its personnel.

Our annual audits of the Department's vehicle pursuits continue to provide valuable insight into the distinctive challenges posed by this enforcement technique. Since early 2016, BPD has wrestled to navigate the balance between public safety, risk management and effective crime prevention when it comes to this area of policing.

This year's audit reviews five incidents that were formally classified as pursuits and reviewed under the Department's established internal review process. In addition to these cases, we examined several new categories that the Department has introduced over the last several years to provide officers with greater latitude in the field. These ongoing adjustments reflect a commendable attempt to respond to realities in the field. At the same time, expanding the framework – while well-intentioned – occasionally led to ambiguity and uncertainty in case classification and response. We encourage the Department to further refine the relevant policies and training in this important risk area.

In recent years, we have also had the latitude to conduct an additional assessment on a "special topic" – some aspect of BPD operations that we can evaluate to share information with the public and to reinforce or enhance the Department's current path with our own recommendations. Over the past several reports, we reviewed the Department's body-worn camera program

when the technology was new to the agency in 2021. We assessed BPD's approach to calls for service involving a person experiencing a mental health crisis. And, in our report last year, we reviewed the Department's compliance with state requirements for gathering demographic data in the context of arrests and traffic stops. In each instance, we supplemented our favorable general impressions with suggestions for further improvement.

Oue experience was similar in this audit cycle. This year, we evaluated the Department's field training program – the process by which academy preparation is translated into field performance for new officers in the patrol setting. This is a crucial part of ensuring readiness, to the point where the state imposes requirements on all police agencies to ensure that certain standards are met. As we explain below, we found that BPD met or exceeded those baseline expectations, and that the training program is structured and managed with real thoughtfulness. While we offer some suggestions for further refinement, we were impressed with the glimpse we got into BPD's approach.

Among other things, 2024 was the final full year of Chief Mike Albanese's tenure as the leader of the Department. The Chief's long and distinguished career began well before the independent oversight of law enforcement was a familiar concept. But in fourteen years of engaging with him in Burbank, we always found him to be not only gracious and professional but genuinely interested in engaging with an outside perspective. We disagreed on a few of the finer points, but it was always a constructive discussion. And we know he was responsible for much of the infrastructure at BPD that we've commended in these audits and recommended to other agencies. We certainly wish him the best in his retirement and look forward to working with his successor.

Review of Misconduct Investigations

The Department's handling of allegations of misconduct has, over the years, evolved into a strength of its internal review processes. The case files we assess are notable for their thoroughness and completeness, and the individual investigation memos are consistently methodical, well-presented, and convincing in their analyses.

Based on our selection criteria, we looked at a total of 21 cases this year. Most were generated externally based on public complaints. Four of them resulted in a finding that involved personnel had in fact violated policy. We found the Department's decisions to be reasonable and grounded in careful gathering and assessment of available evidence.

One of the biggest improvements we have seen is in timeliness: BPD prioritizes the efficient completion of pending cases, and the examples we looked at were reflective of that emphasis. This was not always true. Early in our work, investigative timelines were longer, and some cases were not finalized within the one-year statute of limitations for discipline. The lag not only meant that accountability was precluded as a technical matter, but also that other operational benefits of a prompt resolution – including appropriate corrective action – were being detrimentally delayed. As a result of our focus on that issue, the Department committed to new protocols that included a quarterly "status report" (shared with our office) and helped ensure that open cases were accounted for and on track for timely completion.

That step and increased managerial scrutiny certainly helped, but the adoption of body-worn cameras in 2021 has streamlined the investigative process considerably. Many of the complaints that we reviewed were resolved

conclusively based on the recorded evidence alone.[1] This meant that, in many cases, interviews with witness or subject officers were not essential to determining the events in question, and it was routine for investigations and their accompanying memos to be completed within several weeks.[2]

Though Burbank was later than other agencies in adopting the cameras, its misconduct investigations are more advanced than many in utilizing and presenting recorded evidence. Key moments are summarized in the written case narrative – with time stamps for reference to the videos themselves, and still shots from the recordings are often included as illustrations. In one case involving claims of impropriety in the service of a search warrant, the investigator made meticulous use of body-worn camera recordings to track relevant activities of involved officers at different stages of the process, thereby creating a thorough record of what occurred.

We observed that, even in cases where body-worn camera footage appeared to offer clear and potentially conclusive evidence, investigators still conducted thorough investigations, reflecting a commitment to due diligence and procedural integrity. In one case, an arrestee was struck and allegedly injured by a closing elevator door as he was being escorted by officers in his apartment building; he alleged this was part of the excessive force he had been subjected to. Along with viewing the body-worn camera evidence, the investigator went to the building, found the elevator, and effectively re-created the incident by allowing the door to close on his own shoulder. He was unhurt and noted instead that the door had recoiled on contact.

---

[1] Another significant effect of the recordings is a substantial reduction in the number of "not sustained" outcomes to individual allegations. That specific finding is issued when the evidence is inconclusive, with the result being no discipline but also a somewhat unsatisfying uncertainty. It was much more common in the days when the conflicting testimony of participants was the only available basis for decision-making.

[2] We still consider interviews of subject officers to be an important part of the process in many cases. There are times, for example, when BWC recordings are not totally dispositive for some reason. And the officer should be (and is) routinely interviewed when the recordings are indicative of misconduct; doing so is consistent with the officer's right to put his or her own "best foot forward" in describing or explaining their actions when facing potential discipline. We found the Department's decision-making in this regard to be appropriate.

As in previous years, we were encouraged by the resourcefulness demonstrated by investigators. In one case, a complaint was submitted via email by a woman who objected to an arrest that had occurred six years earlier, prior to the implementation of body-worn cameras. Although the complaint narrative itself was difficult to follow and direct contact with the complainant proved unsuccessful, investigators made a diligent and well-documented effort to reach her and investigate the incident. The investigator reviewed available records and photographs from the time of the incident; these showed that the injuries the woman sustained, resulting from the application of leg restraints, were minimal, and that she had not reported any pain at the time. Based on the evidence, the complaint was deemed unfounded.

This case exemplifies the Department's commitment to conducting meaningful reviews, even in the absence of contemporary video evidence or direct complainant participation. It also reflects the value of maintaining detailed records and the professionalism of investigators in pursuing clarity and accountability.

Of the four cases that resulted in findings of misconduct, two were from the jail.[3] One related to an incident in which an arrested person was found with a flashlight and a knife *after* an overnight stay in a cell. In re-tracing that person's time in custody, it was determined that a (civilian) jailer had failed to complete a "cell cleanliness log" – a procedural violation that may or may not have explained the contraband but nonetheless warranted intervention.

The larger questions about the items' presence remained unanswered. However, the Department responded with procedural changes (including new BWC recording requirements for certain jail activities) that will ideally assist in closing whatever loopholes led to this issue.

In another case, a newly released woman left the facility before staff had recovered an expensive monitoring device she had been provided with

[3] The third related to a discourtesy issue in the field, in which a traffic stop had deteriorated into mutual verbal antagonism. The fourth involved a civilian staff member who left an unattended firearm at her workstation during a shift.

because of self-reported health concerns. Both a witness and the subject jailer acknowledged the mistake – but cited the new pressures to quickly release eligible arrestees after a man died in custody.

The two cases are obviously a tiny fraction of the year's overall performance history. But they are also a reminder of the risks inherent in operating a jail facility within the police station. We discuss these cases and other jail-related concerns in our Use of Force section, below.

Allegations of Biased Policing

Given the significance and sensitivity of biased policing allegations, particularly due to their potential to undermine public trust and raise concerns about profiling and discrimination, our original agreement with the City established that any such case would be *automatically* included in our audit sample. These matters warrant close attention because of their profound implications for the legitimacy of the justice system and the community's confidence in fair and impartial policing.

Accordingly, Burbank provides any case involving bias for our review – even when the allegation of bias is only a peripheral part of the overall dissatisfaction that a complainant is sharing. This year, however, only two investigations met this criterion – down from five in last year's Report and the smallest number in recent memory.

Neither of the allegations was substantiated. This outcome is not unexpected; across the country, these types of allegations are inherently difficult to prove because it depends on the subjective intent of the officers involved, an element that is rarely acknowledged, even if present. But BPD has worked in the past to move beyond simple denials and instead evaluate the full context

of each case in search of objective evidence.[4] While this approach was less prominent in 2024's two investigations than in past years, the incidents themselves were relatively straightforward.

In one of this year's cases, an officer asserted that race did not factor in the decision-making process, citing the limited visibility at the time of the stop: the complainant was wearing a hoodie and a mask when stopped, and the encounter occurred in low-light conditions. Our review of the body-worn camera recording supported this assertion, and we concurred with the ultimate finding that the allegation was unfounded.[5]

The other case turned on the complainant's perception that the officer's use of the word "entitled" was somehow racially coded. But the complainant was unable to make a convincing connection between that term (which he believed was in part related to his expensive car) and a protected class of any kind. And again, while the body-worn camera showed a fractious encounter between the officer and the complainant, it did not appear to involve race or ethnicity.

Pursuing these issues conscientiously should remain a priority for the Department. Although the small number of complaints, and the specific circumstances of these two incidents, lent themselves to a relatively direct approach here, we have encouraged in the past to consider statistical analysis, officer history, and other objective criteria to strengthen its assessment of bias claims where warranted. We hope BPD will maintain a commitment to the thorough, resourceful consideration of allegations involving this critical concern.

---

[4] For example, in a past case where a young black pedestrian with a backpack was stopped for questioning in the early morning hours, he was unpersuaded by officers' explanation that there had been a number of reported thefts in the area. But the investigator pulled together documentation that showed support for the claim.

[5] The Department also reported this case to the Commission on Peace Officer Standards and Training (POST) per California Senate Bill 2 (SB2), which requires that allegations of serious misconduct, including racial bias, be reported for further investigation and review.

Effective Engagement with Complainants

We reviewed several cases that highlighted the importance of tone, communication, and the broader experience of individuals interacting with law enforcement. While the factual determinations in these cases were generally sound, the investigative process at times missed opportunities to fully acknowledge or engage with the complainants' perspectives.

We reviewed one case in which the complainant, who had been stopped with his girlfriend for expired registration and was ultimately arrested for possession of contraband after a search of the vehicle, alleged several procedural flaws and instances of discourtesy. This investigation gave us pause for different reasons.

First was the interview of the complainant by the investigator. This lasted for more than half an hour and was marked by the investigator's patience and willingness to revisit key points to ensure clarity. But we also noted numerous instances in which the investigator, who had reviewed the body-worn camera recordings of the incident in advance, offered explanations or counterpoints to the complainant's assertions. While the information provided was accurate and, in some instances, persuasive to the complainant, the overall effect at times shifted from informative to adversarial. As the conversation progressed, the dynamic appeared to lose some of its constructive tone.

We recognize that there is a delicate balance to maintain: clarifications about basic points of law or obvious misunderstandings have their place and can potentially defuse a complaint for the mutual benefit of both sides. But, as we have noted in the past, detailed explanations too easily come across as defensive or dismissive, or as an indication that the complainant's concerns have been pre-determined as lacking legitimacy. For that reason, we reiterate our recommendation that intake interviews focus primarily on developing a complete understanding of the complainant's allegations and perspectives, while reserving analysis or explanatory commentary by the investigator for a later stage in the process.

Recommendation 1

BPD should reinforce the principle that intake interviews with complainants are primarily intended to acquire a full understanding of their allegations and concerns – and not as a forum for rebuttal or defense of officer actions.

We also thought there was legitimacy to several of the specific issues articulated by the complainant. The complainant understandably took offense to the question, "Who do you roll with?" which presumed a gang affiliation that was not substantiated. His girlfriend seemingly being mistaken for a prostitute was also a provocation that added to his feelings of being pre-judged and treated contemptuously.

The final determination that no policy violations had occurred was reasonable based on the available evidence. However, we also found aspects of the complainant's perspective to be understandable, and these were seemingly disregarded by the determinedly narrow focus of the investigation.

For example, the analysis focused on the fact that the officer had not *directly* called the woman a prostitute, and that certain aspects of her behavior raised legitimate suspicion. While these points were factually accurate, they did not fully address the broader concerns raised by the complainant.

Interestingly, the complainant also took the time to express disapproval of the lead officer's treatment of his *trainee* and cited specific examples of impatience or disrespect. There was support for these contentions in the recordings of the encounter. While certainly not egregious, the training officer's curt and exasperated approach seemed hard to reconcile with effective mentoring.[6] We noted that this element of the complaint was not mentioned in the otherwise detailed close-out letter that the complainant ultimately received.

[6] Nor did it align with our general impressions of the Department's field training program, which we discuss in detail below.

A similar dynamic occurred in a different case, in which a man complained about the officer's disrespectful treatment in the context of issuing him a citation for speeding. Though he continued to take exception to the ticket itself, his primary objection was to the officer's alleged rudeness and his numerous assumptions about the man's usual driving behavior.

In our view, the body-worn camera recording made the complainant's perspective quite understandable: the officer's tone was dismissive and scolding at best ("You don't care about anybody else that lives in this City?") and at times even had a bullying quality ("You're gonna get a ticket for your speed and an unsafe turn...Unless you'd rather me impound your car for thirty days...or take you to jail for reckless driving.") But the investigator's analysis seemed to miss that point in favor of a technical defense of the officer's different comments. In our view, the discourtesy allegation could plausibly have been sustained; at the very least, we would have hoped that the Department would question the effectiveness of the officer's approach and its impression on the complainant – and provide a non-disciplinary intervention accordingly.

At its best, the complaint investigation process does a few things. It should certainly pursue the facts so that proper determinations can be made as to policy violations, and that occurred here. But it should also, where possible, leave the complainant with a real sense of being heard and understood – even if that means acknowledging low-level shortcomings that may not technically be matters of policy. And it should also be a forum for evaluating officer performance in holistic ways – including communication styles and effective treatment of the public. These latter goals were not necessarily achieved in these cases.[7]

Recommendation 2

BPD should address employees' suboptimal performance issues that emerge in the context of complaint cases, even when the identified issues don't rise to the level of formal policy violations.

[7] In fairness to BPD, we also note that it (rightly) sustained a discourtesy allegation that arose in the context of a dispute over a traffic citation in another case.

Review of Force Cases

The Department reported a total of 74 separate force incidents in 2024, a slight increase from comparable statistics in 2023, but commensurate with previous years' counts. Of this overall total, a majority were limited to use of "empty hand" force options, such as the "takedown" of a resistant subject or use of control holds for purposes of moving, handcuffing, or otherwise controlling subjects. Seven of the cases involved multiple force options being utilized in the encounter; each was separately evaluated by the Department for compliance with policy and other expectations.

We sampled 22 of these incidents and reviewed the totality of the case file, including all body-worn and in-car camera footage. Ten involved uses of physical force such as control holds, takedowns, or team takedowns – usually a lower level of force that typically constitutes a majority of the agency's annual deployments. Four involved the use of strikes. The others covered a range of force options, including Taser deployments, use of the police canine, and use of a chemical agent, oleoresin capsicum (OC), delivered by the Pepperball launcher and via a canister.[8] There were no uses of kinetic energy projectiles or uses of deadly force.[9] One case resulted in injuries to the officer. Five cases resulted in injuries to the subject (including three canine bites). Two cases involved a complaint of pain by subjects that were medically cleared without injury.

[8] OC is a less-lethal force option to incapacitate individuals through intense eye irritation, coughing, and difficulty breathing.

[9] "Kinetic energy projectiles" are less-lethal weapons used by police that are designed to hit a person with enough force to stop them but not cause serious bodily injury. "Deadly force" refers to any use of force by law enforcement that is likely to cause death or serious physical injury. This includes actions such as discharging a firearm, applying a carotid neck hold, or striking the head, neck, or throat with a hard object.

While a number of tactical issues were identified and debriefed, none of the uses of force in our sample were found to be out of policy.[10]

Improvements to Procedural Review

Developed and refined over the course of several years, BPD's current internal force review process has become a "gold standard": it is thorough, rigorous and revolves around a commitment to assess each encounter in a holistic way. It treats each force incident as an occasion for accountability but also as an opportunity to improve future performance. Communication, tactics, equipment, supervision, and post-incident protocols are all subject to evaluation – and often lead to constructive issue-spotting.

BPD's internal process, which consists of several layers of command review culminating in a Critical Incident Review Board (CIRB), was modeled in part after the Los Angeles Police Department's robust internal review model, developed during the LAPD's time under a Federal Consent Decree. In Burbank, it was refined over the years by the two former Chiefs with recommendations from our team. We recommend other agencies adopt BPD's process based on our positive experience. In fact, in late 2024, we went so far as to invite personnel from two of OIR Group's other client agencies to a meeting with Burbank supervisors and command staff to learn about the particulars of the approach.

We continue to be impressed with the Department's willingness to further refine and improve the process and noted several new procedural strengths in the last year. For example, the initial sergeant-level assessments – the first phase of review after any use of force – demonstrated improved thoroughness by routinely incorporating surveillance footage, witness canvasses, and

[10] In 2024, the Department sent one force incident to Internal Affairs for further investigation, but the Department's review of this case was not completed by the date of publication for this report. Additionally, the Department had one accidental discharge of a firearm, but that case was also not complete by the date of publication.

interviews of the individuals upon force was used. In cases where arrestee or witness interviews were not conducted, reviewers consistently documented the reasons why no interview was conducted (we discuss this further, below). The introduction of standardized sections into the second phase, the Watch Commander memorandum, has enhanced the evaluation by identifying key accountability elements from the outset. Specifically, the memo now regularly assesses de-escalation and the actions of on-scene supervisors, two important components that were sometimes not explicitly reviewed in past years.

The concept of "de-escalation" applies to any steps that officers take to reduce the likelihood that physical force will be necessary. These could range from effective verbal communication that defuses tension to tactical principles like distance and cover that can slow down the need to react to sudden movements. While law enforcement has recognized and trained these concepts for generations, increased public scrutiny and recent legislative requirements have brought new prominence to them – and raised expectations that officers will prioritize efforts to avoid force where possible.

We appreciate the new and more overt emphasis that BPD has introduced into its review process. It frames expectations for supervisors and, by extension, reinforces the notion at the patrol level that de-escalation should be a standard component of strategy in the field.

We found the attendant analysis in the cases we looked at to be quite worthwhile. In one, for example, the watch commander review noted that an officer's failure to acknowledge and respond to the subject's question about the reason for the police contact was likely to have exacerbated that person's resistance to cooperation. On the other hand, officers in another case were appropriately commended for their efforts at communicating with a subject barricaded inside a vehicle: in an effort to convince him that there was indeed a warrant for his arrest, they played relevant radio traffic and showed him a screenshot of a database that featured the information.

We did question the analysis in one of the cases we looked at, in which the "de-escalation" was described as the officer's decision to seize the subject in a preemptive bear hug and take him to the ground – in recognition of the fact that the subject's combativeness was likely to result in more significant fight.

We don't dispute the legitimacy of the force here, and we recognize that de-escalation is not always possible or applicable to the circumstances of a given encounter. But the characterization of any force as a form of de-escalation is one that we hope the Department will reconsider, to avoid blurring lines in the assessment of an incident's different elements.

Recommendation 3

BPD should refine its agency-wide understanding of "de-escalation" techniques to maintain emphasis on tactics and strategies that lessen the likelihood of physical force being necessary.

We also take this opportunity to affirm BPD for adding a specific line item regarding supervisorial performance to its template. In ways that are obviously dependent on the circumstances of a given incident, supervision can be a significant influence on the tactics and decision-making that precede the use of force (and in some cases supervisors actually direct the use of force) and is therefore worthy of individualized attention.[11] The template contributes to that. And we also encourage the executive-level assessment of the initial post-incident reviews, including evidence-gathering at the scene and efforts to secure a statement from the arrestee.

To some extent, body-worn camera recordings have lessened the impact of the arrestee's narrative version of events; there are situations in which the video evidence essentially "speaks for itself." But the interviews can nonetheless be important in establishing the arrestee's state of mind and perception of officer actions.[12]

With that in mind, we encourage the Department to stay focused on ensuring that the supervisory interview process is objective, appropriately robust, and well-documented. We noted a couple of issues in this regard. For one, the

[11] One of the dynamics we noted in the past, for example, was a prevalence of supervisors becoming directly physically involved in the encounter – sometimes at the expense of effective management.

[12] And, of course, there are plenty of instances in which camera angles, dislodging of the body worn cameras during the encounter (or failure to timely activate, as we had on occasion in these cases) can leave gaps in the video record.

case "packages" we received did not routinely include recordings of arrestee or witness interviews (or attempted interviews), which was the practice in the past. (We asked for – and received – a sampling to follow up on a subset of cases.) These interviews should still continue to be evaluated as part of the Critical Incident Review Board (CIRB) assessment (which we discuss immediately below). The Department should also continue to reinforce and train the principles of effective interviewing; some of the subsets that we reviewed had a perfunctory quality that did not lead to optimal results.[13]

Recommendation 4

BPD should encourage supervisors to prioritize the objective acquisition of detailed statements of individuals upon whom force was used and other witnesses where possible.

Recommendation 5

BPD should continue to include recorded interviews with arrestees and civilian witnesses as part of its routine CIRB process.

The culmination of the BPD process remains the CIRB, which brings together high-ranking members of the agency and subject-matter experts for a roundtable discussion of each case. These sessions occur within two months of incidents, allowing for timely feedback and correction when necessary. And each case file that we assessed contained an email documenting the date, participants, and topic(s) covered when corrective action was necessary, ensuring uniformity in accountability documentation.

The Department's commitment to ongoing improvement was further evidenced by regular roll call briefings and incident-specific debriefs based on insights

[13] In one case, the supervisor said "Hi," to the arrestee, who responded with a profanity and said, "Don't talk to me." The supervisor barely broke stride before saying, "Okay," and leaving in the opposite direction without any attempt to explain his purpose or gain the arrestee's cooperation. In another, the supervisor woke the arrestee from what was apparently a deep sleep in his cell and got predictably groggy answers to a handful of questions. This was in contrast to a third interview, in which a supervisor accommodated a series of digressions and non sequiturs by the individual and eventually evoked an informative, detailed description overall.

taken from the individual encounters in the field. We also noted debriefs in cases involving specialized units even when no procedural issues were identified: for example, every use of the police canine was carefully debriefed by the entire unit for lessons learned.

Our review identified only one issue that was not documented in the review process: in one case involving a foot pursuit, officers failed to broadcast essential information during the pursuit and had to be prompted by dispatch after extended communication gaps. In that case, the CIRB did note other tactical concerns and directed that the team debrief the entire incident.

Hands-On / Physical Use of Force

Defensive tactics and hands-on control techniques are among the most frequently deployed strategies in the patrol environment: in 2024, nearly 70% of the uses of force involved some form of hands-on control technique or "body weapon," such as control holds, takedowns, or strikes. These tactics are frequently used during arrests and field encounters, where officers are tasked with managing uncooperative or combative individuals without escalating to higher levels of force. Proper execution of these techniques helps mitigate injuries to both officers and subjects. Moreover, skilled use of defensive tactics supports legally defensible outcomes, especially under the scrutiny of body-worn camera review and administrative investigations.

As we have reported in the past, however, some incidents in our sample revealed what we perceived to be hesitation and inconsistency in application of hands-on control techniques. Officers appeared reluctant to execute control holds and takedowns decisively; some relied on momentum and body weight rather than trained defensive tactics methods such as leg sweeps.[14] This resulted in suboptimal outcomes, including falls into hazardous areas like roadways, and, in two cases in our sample, escalation to close-contact Taser deployment (which we discuss in more detail later). The Department's review

[14] Conversely, in one case we observed officers successfully use a leg sweep to bring a subject to the ground.

commented on these applications, and, in one case, directed an entire shift to debrief on tactical positioning and officer safety.

The shift debrief is a positive step forward, but these outcomes underscore the need for continued direction to defensive tactics (re)training to reinforce confidence in assertive and controlled physical engagement. Frequent, hands-on instruction ensures officers retain muscle memory and apply control holds, takedowns, and ground control effectively in dynamic situations.

We also acknowledge that, while comprehensive defensive tactics training equips officers with essential tools for safely managing confrontations, it is not a fail-safe in every encounter. Human behavior is unpredictable, and situational variables can render even the most practiced techniques insufficient. We observed this in one case where officers attempted to apprehend a felony subject, but quickly lost control when the subject, who later admitted to being a trained street fighter, punched the officers in the head and slammed one of them to the ground. While officers ultimately gained control and were able to handcuff the subject, one sustained significant injury.
In its review of that case, the Department noted that the first officer should have attempted de-escalation prior to going hands-on, and that he should have waited for additional backup. But, again, it did not direct the officers to any defensive tactics training to regain confidence and skills after this fight.

Despite the need and desire for more defensive tactics training, many law enforcement agencies – including Burbank -- face acute time and budgetary constraints that limit their ability to deliver training beyond the State-mandated training blocks. To address these challenges, the Department might consider adopting a “micro training” approach, such as peer-led, defensive-tactics “refresher” sessions at briefings, and scenario-based tabletop exercises that emphasize tactical decision-making. We encourage the Department to explore these options to provide officers with the training they need to be effective in the field in spite of the practical obstacles.

Recommendation 6

BPD should explore “micro training” in defensive tactics to provide more regular review of hand-on / empty hands techniques.

Updates in Use of Police Canine

The Department reported nine canine deployments, and we reviewed three. One of these cases involved a canine deployment in response to a forced entry with intent of burglarizing a commercial building. Officers located a subject hiding in the rear of a large commercial property. After issuing commands to surrender with no response, the canine officer issued warnings that the canine would be deployed. Shortly after, the canine was deployed and located the subject; the canine bit the subject and, when the subject surrendered, the canine officer immediately called the canine off the bite. The subject was arrested with no further incident.

In their after-action debrief of this call, the Department learned that there was confusion over deployment standards in the canine policy (Policy 428): the policy authorizes canine use in situations involving “violent or serious offenses,” but it was not clear if this category included forced entry burglary. In response, it issued a Department Directive clarifying that forced entry burglary falls within the classification of “serious offenses,” allowing for canine deployment when the suspect has forced entry into a building with intent to burglarize, is believed to be hiding within a structure, and may present a danger to officers or the public.

We reviewed a second case where a canine was deployed to apprehend one of several fleeing subjects wanted for felony (armed) burglary. Officers tracked one subject into a backyard hedge; after several commands and warnings went unheeded, the canine officer deployed the canine. The subject came out from the hedges and was handcuffed, and the canine released the bite.

The deployment was successful, and the dog performed in keeping with the handler's commands – two variables that are standard questions within the evaluation process. However, review of the video footage showed that the canine held the bite for seconds beyond the subject’s initial surrender, and

until he was securely taken into custody. This was potentially concerning, insofar as minimizing the nature and extent of bite events is a priority.

But the related police report rationalized the decision to leave the canine on the bite based on the nature of the crime, officer safety and known outstanding armed suspects. The rationalization was carefully considered by several levels of the chain of command, who ultimately found the length of the bite to be reasonable.

With evolving case law regarding the length and timing of canine bites, and recent legislative focus on the risk/reward calculus of canine deployment,[15] reviewing proportionality and disengagement expectations in this careful way remains essential to mitigate liability and ensure adherence to new and emerging legal standards.[16] Ultimately, we, too, concurred with the reasonableness of the bite's duration.

We wish the analysis in our other bite case, involving the apprehension of a female subject at an in-progress residential burglary, had been as thoughtful. We did not question the legitimacy of the initial deployment; the woman was not responsive to multiple warnings, and had resorted to arming herself with a golf club. But as officers quickly followed the dog into the residence and seized the woman while the dog remained engaged on a bite, they were able to outnumber her, drag her into an open space, and get her in a prone position facing down. But the dog remained on the bite for several more seconds until she was actually in handcuffs.

While acknowledging that she arguably continued to “resist”[17] during these moments, our impression was that the dog had ceased to become necessary at a certain point when the woman was surrounded and being physically

---

[15] In recent years, bills have been repeatedly introduced in the California legislature to prohibit the use of police canines to effectuate arrests.

[16] See, for example, Rosenbaum v. City of San Jose (2024): in that case, the court ruled that officers may face liability for excessive force when they allow a police dog to keep biting a suspect who has clearly surrendered and is under control. It reaffirmed that this conduct violates the Fourth Amendment.

[17] A subject who is being bitten by a police canine will most likely struggle in response to the ongoing pain which an officer might interpret as resisting arrest.

overpowered. But the subsequent documentation did not reflect any questioning of the efficacy and duration of the bite, or any thought that minimizing contact with the dog seemed like a goal worth attending to. A "can vs. should" analysis here at least seemed worthy of consideration.

Recommendation 7

BPD should continue to ensure that current training of its police service dogs is reflective of evolving legal standards and should ensure that a rigorous review of bite incidents continues to be part of its CIRB process.

Jail Searches

Several cases in our samples underscored the necessity of thorough and well-documented jail searches, particularly when intake processes are modified or bypassed due to combative behavior or physical restraints.
In one case in our force sample from early 2024, officers attempted a search of a combative subject at intake. Even after using control holds to subdue the subject, the search was compromised due to the subject's resistance, prompting a supervisor to direct staff to "search the best you can."[18]

We then reviewed a case that occurred in mid-2024 also involving the jail search protocol. In that Internal Affairs case, a subject who had bypassed the standard booking process because leg restraints had been placed on him was later moved to a dorm cell. He was later found to possess a knife and flashlight over 24 hours after booking, despite prior searches and visible inspection of pockets.

In its review of that case, the Department held personnel individually accountable and also directed a comprehensive analysis of jail search protocols. The Department identified vulnerabilities in search protocols, gaps in technology deployment (e.g., underutilized metal detectors), and challenges

[18] This directive, while unusual, seemed like a reasonable attempt to balance priorities in dealing with a highly resistant subject.

in ensuring contraband is reliably detected and documented. The Department instituted an automated system for jail checks (versus previously used paper logs) and issued directives regarding the use of metal detectors.

Together, these cases supported the Department's renewed emphasis on training for high-risk bookings, use of all available search technologies, and routine verification of cell and subject checks, especially when intake procedures deviate from standard practice. We will continue to review this topic.

Taser Safeguards

In prior reports, we have documented concerns related to specific aspects of surrounding Taser deployments. Examples included incidents where the device was used in drive-stun mode for pain compliance rather than achieving neuromuscular incapacitation (NMI), which is the use for which the weapon was designed.[19] We also focused on deployments involving fleeing subjects, which we considered to be potentially in conflict with Department policy.

In response, we recommend that the Department more carefully evaluate Taser deployments to ensure consistency with both policy and manufacturer guidelines. Since that time, we have observed meaningful improvement in deployment decision-making, as well as more deliberate post-incident evaluation.

---

[19] Drive-stun mode is when the Taser device is placed directly onto the subject's body and deployed without the Taser probes being ejected. This mode is not advised by either the manufacturer or by research studies because it does not result in neuromuscular incapacitation (NMI). See PERF & COPS, 2011 Electronic Control Weapon Guidelines (March 2011), pages 14, 19. Interestingly, the manufacturer's latest Taser model -- the Taser T10 -- no longer has the drive stun mode capability.

For BPD officers, policy restricts the use of drive-stun to specialized circumstances; we recommended that the Department revisit these use cases and consider prohibiting the use of drive-stun all together. See BPD's policy 309.5.1.

The three Taser cases we reviewed this year showed a more careful consideration of the necessity of the deployment, as well as the tactics leading to deployment. While the deployments themselves were found to be "in policy," the Department identified areas of improvement and appropriately debriefed the incidents.

For example, in one case, officers used the Taser to control a domestic violence subject who actively struggled as officers attempted to handcuff him. When the initial deployment did not achieve NMI due to insufficient probe spread, the officer transitioned to close-contact mode, applying the device to the subject's leg to close the electrical loop.[20] This allowed officers to control the subject. The Department's review considered the close distance and discussed officer safety, and a team debrief was conducted for all involved. In another case, an officer deployed the Taser to control a trespassing subject who actively fought officers and reached for his waistband. As with the case above, the proximity of the deployment failed to achieve NMI, and the officer transitioned to close-contact mode. Here again, the Department debriefed the incident with an eye toward officer safety and the tactical considerations of the close quarters.

However, our review of that case also identified one area where additional analysis was warranted: we noted a missed opportunity to assess the duration of the Taser deployment. When reviewing the Taser Deployment Log, the digital record automatically captured for each deployment, we saw that the device had rejected a trigger pull "due to agency hard shutdown setting." This indicates that the officer had likely attempted to initiate another cycle, but that the device rejected it due to the hard shutdown protocol: a safety feature that

[20] Taser devices rely on probe spread to complete an electrical circuit across a subject's body and achieve neuromuscular incapacitation. When probes strike too closely together (typically less than 12 inches apart), the circuit may not span enough muscle mass to interrupt voluntary movement. In such cases, officers may transition to close contact mode to close the electrical loop manually. This use is allowed per Department policy.

automatically stops the electrical cycle after five seconds, regardless of whether the trigger is still being pulled.[21]

This component of the incident seems noteworthy for two reasons. The first is the functional significance of the device's hard shutdown setting: it is a built-in safeguard that supports controlled decision-making and subject safety. By interrupting continuous activation, the setting reduces the potential for excessive or prolonged exposure, affording officers the opportunity to reassess and apply only what is reasonable under the circumstances. We continue to be impressed with the Department's commitment to technological innovations that support effective officer performance.

Secondly, we note that the existence of the safeguard should not be a complete substitute for officer awareness and proper tactics. Ultimately, it remains the responsibility of each officer to self-regulate deployment and articulate clear justification for any subsequent activation. In addition, supervisory debriefs and incident reviews should consistently examine whether continued Taser use was warranted and aligned with standards of proportionality and necessity.

We recommend that the Department routinely review the Deployment Logs as part of their review process. Logs that reflect anomalies, such as trigger rejections, short probe spreads, or multiple activations should prompt supervisory commentary on justification, tactical reasoning, and any necessary retraining, or in the appropriate cases, accountability.

Recommendation 8

BPD should routinely review Taser Deployment Logs and direct supervisors to address anomalies (such as trigger rejections or multiple activations) through documented explanation or other needed intervention.

[21] This safeguard is designed to prevent prolonged exposure to electrical current and align device operation with the Department's policy.

Review of Vehicle Pursuits

Police vehicle pursuits remain a critical issue in public safety discussions, particularly regarding law enforcement accountability and risk management. Across the country, agencies continue to evaluate the balance between rigorous enforcement and the inherent dangers of high-speed chases. Oversight efforts, both internal and external, have increasingly sought ways to mitigate risks to officers, suspects and uninvolved civilian pedestrians and motorists.

One very specific way that the issue can be addressed is through policy, and specifically through the setting of thresholds for when pursuits are authorized and when they should be terminated. Many jurisdictions, including San Diego and Oakland, have taken a restrictive approach by limiting pursuits to incidents involving serious crimes. The other end of the spectrum would be a standard adopted by some agencies that allows officers to pursue for any "failure to yield" to an attempted traffic stop, regardless of the initial basis for the enforcement action.

Since 2013, and after identifying what it believed to be excessive engagement in high-risk vehicle pursuits, the Department has consciously used a restrictive threshold to limit pursuit incidents. This has been reflected fairly consistently in the agency's low annual totals. However, as we have discussed in prior Reports, specific refinements to policy and internal discussions about the pros and cons of different approaches have continued in an effort to provide greater clarity and accommodate the importance of officer discretion in real-time decision-making.

Our review this year offered us a window into the status of these ongoing efforts.

In this section, we discuss both formal pursuits and events that were classified as Tracking Mode or Assessment Period – perhaps inaccurately. Our findings suggest that the Department would benefit from a recalibration of its pursuit philosophy overall. A clearly articulated framework, grounded in operational realities and aligned across policy, training, and supervision, can help restore

clarity, reinforce accountability, and ensure that vehicle engagements are conducted safely, lawfully, and in accordance with the expectations of leadership, the City, and the public.

Formal Pursuits and the Balance Test

The Department reported five formal vehicle pursuits in 2024, two of which stemmed from the same incident involving multiple fleeing suspects. This is a modest number, and one that is both consistent with recent totals and reflective of the agency's stringent requirements for authorization.

As in the past, the Department evaluated these events thoroughly. Each incident received significant internal scrutiny and review, resulting in thorough debriefing and re-training for individuals, units, and across the Department. Two were found to have been out of policy and addressed accordingly with corrective action and re-training.

To assess these incidents, the Department applied its “Balance Test,” a structured method for evaluating the risk-to-benefit ratio of pursuit engagement. While past applications of the test have yielded inconsistent outcomes, this year’s analyses appeared to apply the framework more consistently and effectively.

For example, in one pursuit case, the initial call for service was for a residential burglary. While that call did not initially appear to meet the pursuit criteria, the Board noted that the call indicated the four subjects who fled might be armed, raising the level of risk to the public. The Board noted that the officers broadcast early and effectively, giving the Watch Commander the necessary information to first authorize, and then monitor, the pursuit. The officers called for assistance of their Air Unit and officers from a neighboring agency. While the officers’ speeds were high in a residential zone, traffic was light and the officer drove with due regard for public safety. These factors were all weighed against each other – an application of the Balance Test -- and the Department found this pursuit to be “in policy.”

Conversely, the Department used the Balance Test to find two of the pursuits to be out of policy when the risks outweighed the rewards. In these cases, they determined that the officers' actions, which included unsafe driving behaviors, failure to activate emergency equipment, and limited communication, outweighed the benefits of apprehending the subjects. . In one of these, the Board noted that, even though the pursuit met the initial criteria to pursue – a felony – officers drove at unsafe speeds and without due regard for the safety of the public. Then, technical issues delayed the communication between the Air Unit and ground units in pursuit, resulting in the ground units continuing a high-speed, high-risk pursuit when they should have transitioned into Tracking Mode. These risks did not meet the Balance Test criteria, and the Department found the pursuit to be out of policy.

Tracking Mode and Assessment Period

In our 2022 review, we recommended caution regarding the implementation of two new operational designations -- Tracking Mode and Assessment Period -- intended to provide lower-risk alternatives to formal vehicle pursuits.

These alternatives defined in Policy 314: Vehicle Pursuits. "Tracking Mode" is when an incident meets the criteria for a pursuit, but conditions have become unsafe to continue. In these cases, the officer can request the support of an Air Unit. The officer can still follow the suspect vehicle, either "Code-3" (with lights and sirens) or without. However, the officer must do so "at reduced speed" and "out of the suspect line of sight."

The policy also allowed for an "assessment period," where officers are allowed time to assess the violator/suspect actions (i.e., is the violator looking back at the officer, is there a safe place for the violator/suspect to pull over). But, as the policy notes, "An assessment period is not intended to be a pretext for officers to initiate a pursuit without alerting supervision."

While these categories were designed to offer field flexibility and reduce risk, prior reports noted that their introduction could lead to pursuit-like actions occurring outside the Department's formal pursuit framework. Specifically, we

raised concerns that officers might engage in high-risk driving behaviors without meeting the policy criteria for initiating a pursuit – and without engaging the supervision and other safeguards that are built into formal pursuit requirements.

By 2023, our reviews found that both officers and supervisors occasionally misunderstood the operational boundaries of these designations. In some cases, the distinction between Tracking Mode, Assessment, and formal pursuits appeared blurred, potentially undermining the Department's restrictive pursuit threshold.

In response, the Department refined its policy language, provided targeted training, and implemented a Tracking Mode / Assessment Period Driving Log (Recommendation 16, 2022). The Log was intended to document these specific events, support supervisory awareness, and provide data to evaluate the use and effectiveness of these alternatives. In 2024, the Log recorded 43 such incidents: 34 resulted in disengagement, four in apprehension, and five had other outcomes.[22] The events in this Log, however, were not regularly reviewed unless they involved an incident that required supervisory evaluation per Department protocol, such as use of force.

As part of this year's review, we randomly selected eight cases from the Log for closer evaluation. The goal was to assess adherence to policy and identify any patterns in operational practice. In these cases, we observed driving behaviors that resembled those typically associated with formal pursuits, such as extended length / duration, intermittent use of lights and sirens, and violations of the vehicle code such as speeding. In short, they were pursuits in practice, if not in name.

[22] According to the Department, the three outcome categories are defined as follow:

- Let go – the officers canceled following the vehicle based on their assessment or when the level of offense did not warrant the necessary resources, such as the Air Unit, and/or when other investigative options were available.
- Apprehended – most often as a result of Tracking Mode, where the helicopter followed and directed patrol units to the vehicle when it parked.
- Other – handed off to another agency, or vehicle was tracked and located/recovered, but was not occupied (or nobody was apprehended).

To its credit, the Department reclassified one case in real time after a supervisor determined that the driving behavior met the criteria for a formal pursuit. Officers had believed they were in Tracking Mode while pursuing a suspected stolen vehicle but engaged in high-speed driving inconsistent with policy. Once officers began to broadcast their actions, a supervisor cancelled the pursuit, the incident was reclassified, and the Department conducted a full debrief and formal review, ultimately finding the pursuit to be out of policy. This response reflects best practice: real-time correction, supervisory intervention, and post-incident accountability (and reinforces how important communication is to effective outcomes).

But the Department acknowledged that this was not the case with the other events logged as Tracking Mode, which showed comparable patterns. In most, the initiating offense did not meet the Department's criteria for a formal pursuit and officers did not declare a pursuit or initiate consistent Code-3 (lights and sirens). Instead, they broadcast that they were in Tracking Mode while continuing to follow the subject vehicle at close range, often violating the vehicle code and only intermittently using emergency equipment. The Department acknowledged that this was not consistent with the intended use of Tracking Mode, and presented increased risks while officers waited for an Air Unit to go overhead.

Generally, we did not see officers reduce speed or maintain distance from the subject vehicle once the Air Unit was overhead, as was intended by Tracking Mode. We did, however, observe effective containment and apprehension when officers were directed to the termination of an event by the Air Unit.

Assessment Period cases presented different but equally challenging issues. These incidents involved lower-level offenses that did not meet pursuit criteria, yet officers engaged in higher-risk driving behaviors for extended periods, such as running red lights, freeway transitions, and sporadic use of emergency equipment. The Department acknowledged that Assessment, as implemented, allowed officers too much discretion in the field. It is now considering eliminating the designation entirely, a plan that we support.

Recommendation 9

BPD should consider eliminating the concept of Assessment Period from Policy 314.

In both cases, officers' actions are often not regularly evaluated or corrected (this was even the case when an Assessment Period led to a formal pursuit, as we noted above). To strengthen oversight, the Department plans to assign the Audits and Inspections Unit to conduct regular reviews of the Log to identify incidents that may warrant reclassification or further evaluation.

As these cases exemplified, the distinction between formal pursuits and "pursuit-like" activities is not strictly academic. It is foundational to risk management, policy compliance, and safety.

Communication and Code-3 Driving

Overall, we noted areas for potential improvement in pursuits or pursuit-like activity, such as communication and Code-3 driving, and recommend continued training to address these concerns.

Communication and broadcasting are essential components of pursuit operations; they serve not only to coordinate field units, but also to facilitate supervisory oversight, enabling real-time evaluation of pursuit justification and policy compliance. Communication from the initiating officer regarding location, suspect behavior, traffic conditions, and other critical factors, allows responding units and supervisors to make informed tactical decisions.
In some cases within this period, officers did not provide sufficient radio updates, hampering supervisory control. For example, in one case, the primary officer failed to broadcast that he was in an active pursuit, limiting his supervisor's ability to cancel the pursuit when it became clear that the pursuit did not meet the criteria for authorization.

Similarly, our case reviews identified three instances where officers inconsistently used emergency equipment while in pursuit (referred to as

driving “Code-3”), as well as cases of officers passing on the right[23] or failing to clear intersections safely. These failures were appropriately identified by the Department in the two cases classified as formal pursuits, and officers were retrained. In a third, however, the officer ran a red light before initiating a formal pursuit and going Code-3, presenting a risk as he drove through the intersection, and this behavior was not addressed.[24]

Effective communication and Code-3 driving remain central to safe and accountable pursuits. Officers should be trained and encouraged to clearly broadcast their intent and driving behavior, particularly when transitioning from observation to engagement. Supervisors rely on timely and accurate information to assess risk, authorize or terminate pursuits, and ensure compliance with Department policy.

Strengthening training in these key areas will improve outcomes. But we also recognize that more frequent “real world” training, such as the Emergency Vehicle Operation Course (EVOC) Training, can be cost and time prohibitive.[25] As such, we recommend frequent and repeated classroom-based vehicle pursuit training during daily briefings; these trainings should include scenario-based table top exercises that replicate the decision-making needed during pursuits, such as testing “go/no-go” decisions against policy and radio communication simulations to reinforce driving skills and communication and coordination with supervisors, dispatch and the Air Unit.

The Department conducted this type of exercise when it debriefed the out of policy pursuit detailed above with involved personnel: it used video footage of

[23] Officers are instructed to pass on the left when responding with lights and sirens, as civilian drivers are legally required to yield by pulling to the right side of the roadway.

[24] In that case, the officer ran a red light without lights and sirens while he was still in “Assessment Period,” before escalating the event to a formal pursuit. This “pre-pursuit” driving was not evaluated by the Department. We discussed this and other challenges with Assessment in detail above.

[25] EVOC is a specialized training program designed to teach first responders how to operate emergency vehicles safely and effectively under both routine and high-stress conditions. It is usually conducted, in part, on a training course behind the wheel of a patrol vehicle.

the incident alongside a detailed slide presentation to discuss missteps and areas of improvement. This debrief was commendable and should be used as a template for future similar Department-wide training.

Recommendation 10

BPD should conduct frequent and repeated scenario-based vehicle pursuit training during daily briefings as practicable to reinforce best practices.

Recalibration of the "Pursuit Philosophy"

Confusion at the officer level and inconsistent application of the policy continue to be features of the Department's performance in this area. Factors that we identified in past reports remain an issue. Officers, particularly those newer to the field, often lack practical exposure to pursuit dynamics and appear uncertain about when and how to formally declare a pursuit. Simultaneously, the introduction of alternative classifications such as "Tracking Mode" and "Assessment Period," while intended to enhance operational discretion, has introduced ambiguity that complicates decision-making in the field.

On their face, these descriptions show the complexities involved in trying to "navigate the gray," and find the right balance between risk management and effective enforcement, or between officer discretion and bright line limits. And our recent discussions with BPD leadership have also given us insight into what may be the prevailing mindset at the patrol level: a perception that Department management dislikes pursuits and that avoiding them – or the formal acknowledgment of them – is therefore a priority. This view may have been shaped by past administrative outcomes related to pursuits, limited positive reinforcement for well-managed pursuits, and a more prominent cultural emphasis on risk avoidance.

As a result, BPD has inadvertently created conditions in which officers may hesitate to engage or may misclassify events in a way that sidelines the structured oversight and safeguards that should be applicable. Certainly, caution is appropriate given the risks associated with pursuits. We respect the thoughtfulness with which BPD established a high threshold while continuing to remain open to the benefits of – or needs for – ongoing refinement. But in some ways, the Department is back to square one: an officer population that is inexperienced, wary, uncertain, and incentivized to characterize their driving activity in ways that may not match the substantive reality of it.

It is important to recognize that vehicle pursuits, when conducted within policy and under supervisory oversight, remain a necessary tool in certain limited enforcement contexts. Avoiding the formal declaration of a pursuit does not eliminate risk; if anything, it is likely enhanced by limiting safeguards such as Code-3 notification, supervisory monitoring, and structured debriefing.
The Department has acknowledged this challenge and is already in the process of revising its pursuit policy yet again. We recommend that the Department use this opportunity to evaluate its overall "Pursuit Philosophy" first, before making policy revisions. In its 2019 Vehicle Pursuit guidelines, the International Association of Chiefs of Police (IACP) stated:

> *The first step an agency should take […] is to clearly outline the overall pursuit philosophy that will be adopted. This overarching philosophy should outline when officers are authorized to pursue and should take into account a variety of factors, to include relevant jurisdictional law; the environment in which the agency operates, such as an urban or rural locale; and community expectations. This philosophy will largely dictate the procedures and tactics to be used during a pursuit.*

As pursuit policy continues to evolve, there is a clear need to define and communicate the Department's pursuit philosophy. Doing so will help the Department develop its new policy, clarify when and why pursuits are appropriate, and align training and supervisory expectations with those goals.

Doing so may help reduce ambiguity, reinforce operational consistency, and support a culture of informed decision-making and accountability.[26]

Recommendation 11

Before drafting an updated pursuit policy, BPD should clearly define its "pursuit philosophy," and use this exercise to develop policy, training, and supervisory expectations that align with this philosophy.

[26] In developing this policy, it would be helpful for BPD to solicit input from City leadership and the City's Police Commission as representatives of the Burbank community.

Special Project: BPD's Field Training Program

As this year's "special project," we chose to evaluate Burbank's Field Training Program to determine if it operates within the framework of California's standards and best practices nationwide. A field training program is a structured, on-the-job learning experience where new officers are mentored by experienced personnel to develop practical skills, apply departmental procedures, and demonstrate readiness for independent duty.

While this is an aspect of policing that is understandably overlooked by the average member of the public, it is a critical element of effective operations. The program that helps new officers make the transition from the classrooms of the academy to the "real world" of patrol is a hugely influential factor in preparedness and strong performance. Accordingly, a rigorous approach to field training goes beyond checking boxes and instead contributes in substantive ways to officer development. Strengths are reinforced, weaknesses are identified and addressed, and – on rare occasions – new officers who are unable to meet expectations are separated from the agency.

In California, having a structured field training program is not just optional – it is required by law for agencies that employ peace officers. The implementation of these programs can vary by agency but must adhere to the Commission on Peace Officer Standards and Training (POST) minimum standards. Key POST mandates include:

- A minimum of 10 weeks of field training
- Use of a POST-approved Field Training Program Guide covering specific topic areas and competency requirements (e.g., officer safety, use of force, report writing, community relations, etc.).
- Daily observation reports or training journal entries that document trainee performance each shift, reviewed with the trainee
- Weekly summary or supervisory reviews of trainee progress by the program supervisor

- Qualified FTOs: trainers must be experienced (minimum of one year in patrol), complete a certified FTO course, and not have disqualifying misconduct (explicitly, California law bars officers with certain sustained bias or force complaints from being FTOs)
- FTO Coordinator: a designated supervisor (sergeant or above) to oversee the program and review documentation
- End-of-program verification: an attestation by the FTO and department head that the trainee has demonstrated all required competencies before being released from training
- Feedback mechanisms: POST also now requires that trainees evaluate their FTOs and the program at the end of training, and that FTOs receive annual performance reviews of their training duties, to ensure accountability and quality of training.

A sound field training program meets the structural requirements imposed by POST and delineated above. But it also (and obviously) depends on the quality and commitment of the officers who provide the training. They assist in familiarizing trainees with the many practical skills (radio communication, geography, searches, command presence, officer safety) the job entails. And, ideally, they also provide a worthy example in how to engage with the public respectfully and exercise discretion judiciously.

Our review found that BPD's program has several exemplary features. To begin with, it is beyond compliance with the state requirements listed above. As we detail in this section of our report, BPD's six month program exceeds the 10-week minimum, and BPD uses the POST-sanctioned Daily Observation Report (DOR) format with numeric ratings. BPD also has a dedicated FTO program coordinator and completes all required sign-offs and documentation before a trainee is cleared for solo work. Trainees in BPD fill out end-of-phase critiques providing feedback on each FTO, which aligns with POST's mandate for trainee evaluations of FTOs. (While the relative power imbalance here is a likely impediment to candor, some level of accountability for the training officers themselves makes sense to us as an important feature.) And, the department updates its FTO Policy Manual on a five-year cycle (most recently

in 2024) to incorporate new state standards and contemporary policing practices.[27]

In short, our review found that BPD meets or exceeds all core POST program standards.

Further, our review found that while Burbank's program reflects many of the traditional practices of field training, often referred to as the "San Jose Model", it also incorporates aspects of the newer "Reno Model," which focuses on problem-solving and critical thinking over metrics.[28] While BPD's program is fundamentally a San Jose model variant (phased, rated DORs, etc.) with a longer timeframe, the program has incorporated several aspects of the Reno Model as well; for example, the evaluation form includes both numeric scores and narrative feedback, combining structure with reflection. Together, this creates a well-rounded program for trainees.

To evaluate BPD's approach, we met with FTO program leadership and reviewed source materials to compare how BPD's program aligns with these model best practices.

[27] The 2024 update, for example, added content on procedural justice, updated policies on handling persons with mental illness, and included new written exams on penal codes to ensure recruits have retained academy legal knowledge.

[28] The San Jose model, so named because it was developed in San Jose, California, in the 1970s, is characterized by daily numeric evaluations across numerous performance categories. It is by far the most widely used model nationwide and is even integrated into accreditation standards like CALEA. Around 2000, the "Reno Model" was developed with support from prominent national policing organizations and is meant to address some of the perceived limitations with the San Jose approach. It uses adult learning principles and problem-based learning instead of daily numeric ratings, and it emphasizes coaching and reflection. Trainees complete problem-solving exercises for each phase and the model incorporates community-oriented policing skills and critical thinking scenarios.

Burbank's FTO Program: An Overview

The FTO program is managed by patrol and training leadership. A lieutenant serves as the FTO Program Coordinator and oversees the training progress, with a sergeant handling day-to-day supervision. This leadership convenes monthly FTO meetings where all FTOs discuss each trainee's progress, share teaching strategies, and address any issues or complaints that have arisen. These meetings also cover advanced training topics for FTOs – for example, recent sessions have included investigative techniques and crime scene management refreshers to ensure FTOs are equipped to teach those skills. BPD also benefits from having former FTOs in supervisory roles on various shifts, which helps reinforce training standards: field supervisors who were ex-FTOs understand the training objectives and can mentor new officers consistent with the program's expectations.

FTO Selection and Training

Best practice emphasizes that FTOs should be among the department's best – not just good street cops, but good *teachers* and role models. Agencies should look for FTO candidates with strong leadership, patience and teaching ability, and a passion for mentorship. Furthermore, recent research underscores how critical FTO selection is: a study funded in part by the National Policing Institute found that the long-term behavior of new officers (like frequency of use-of-force incidents or citizen complaints) was statistically linked to who their FTO was, meaning that a less professional FTO can imprint bad habits that last years.[29]

BPD reported a rigorous selection process for Field Training Officers to ensure only high-performing, capable officers train new recruits. An officer who

[29] Getty, Ryan & Worrall, John & Morris, Robert. (2014). How Far From the Tree Does the Apple Fall? Field Training Officers, Their Trainees, and Allegations of Misconduct. Crime & Delinquency. 62. See also the National Policing Institute's FTO page at https://www.policinginstitute.org/onpolicing/police-field-training-programs/

volunteers to become an FTO must typically have at least 2 years of law enforcement experience (with a minimum of 1 year served at BPD). Candidates submit a memorandum of interest and undergo an oral interview panel assessment. The average experience level for BPD's FTOs is in fact 3–5 years on the force, meaning trainers have a solid foundation of patrol experience before taking on trainees. BPD also reviews the candidate's performance record and disciplinary history as part of selection, aligning with best practices that FTOs should model excellent conduct (e.g., no significant use-of-force issues or complaints).

Once selected, new FTOs must complete a 40-hour POST-certified Field Training Officer course, which covers adult teaching techniques, ethics, evaluation methods, and legal/liability issues in training. They are then officially certified as FTOs.

As noted above, California POST regulations mandate periodic updates; BPD adheres to this by requiring FTOs to attend update training at least every two years to stay current on training methods and policy changes; this exceeds the state requirement of 24 hours every 3 years, demonstrating Burbank's commitment to keeping FTOs sharp. In 2024, BPD updated its FTO curriculum to reflect evolving law enforcement standards: new material was added on community policing, mental health crises, and de-escalation tactics. FTOs were briefed on improved ways to evaluate performance, including clearer standardized criteria for scoring trainee behavior and knowledge (the FTO manual now has expanded explanations of how to grade performance in each category).

Additionally, BPD employs a tiered FTO role structure tied to experience and incentive: some FTOs are designated full-time trainers (with a pay premium and dedicated training duties), others serve as auxiliary FTOs who train as needed in addition to regular assignments, and a few are "FTO trainees" themselves (experienced officers in a probationary period as new FTOs). This tiered approach, including a small pay differential, motivates officers to become FTOs and recognizes the added responsibility. BPD's approach aligns with practices in other agencies that offer stipends or career credit for serving as an FTO.

Trainee Onboarding and Progression

New BPD officers ("trainees") enter the FTO program immediately after graduating from a police academy. BPD hires recruits and sends them to academies, such as the Los Angeles Sheriff's Academy or Rio Hondo Police Academy, for training.[30] After graduation, these recruits undergo approximately two weeks of post-academy classroom orientation at BPD covering Burbank-specific policies, municipal codes, report writing standards, and key procedures (for example, Burbank's specific approach to search and seizure, high-risk car stops).

Trainees also spend another two to three weeks in practical skills refreshers, including defensive tactics and physical fitness with a Defensive Tactics sergeant. By the time a trainee begins patrol with their first FTO, they have been grounded in Burbank's expectations and had an opportunity to rehearse critical skills, which helps bridge the gap between academy training and real policing in the city.

This initial orientation itself is the type of "adult-learning" reflective of the Reno Model, acknowledging that recruits benefit from classroom and hands-on refreshers before field immersion.

To strengthen this onboarding phase even more, the Department might also incorporate a structured community engagement or service component. Integrating this element into the preliminary phase would provide trainees with meaningful exposure to the communities that they will serve. And, this addition would align with the principles of the Reno Model, which emphasizes community-oriented policing and relationship-building as core competencies for new officers. Moreover, this component would provide new hires unfamiliar with Burbank's neighborhoods an opportunity to meet residents rather than encountering them for the first time in a criminal enforcement context.

[30] Officers who previously served in other departments but transfer to BPD, commonly referred to as "laterals," follow a similar field training program, but tailored to their level of experience and skill. Some can move through the FTO program at a more accelerated rate, while others benefit from the full FTO program like new-hires.

The engagement component could include activities such as participating in neighborhood meetings or community events or partnering with local organizations for service-based initiatives. For example, in Columbus, Ohio, trainees engage in a "field immersion" project, where recruits partner with local community organizations for hands-on service projects and ride-alongs *outside* of traditional police duties, such as working at a food bank, helping a neighborhood clean-up, or shadowing a social services outreach program. And, in New Jersey, the Camden County Police Department made community engagement a core part of its training program: it incorporates community outreach, attendance at local events, and youth engagement initiatives for officers in training. Trainees spend portions of their field training attending block parties, visiting schools, or working with mentorship programs, under the guidance of their FTOs, to learn effective ways to interact with residents.

We recommend that the Department consider adding this feature to its program and evaluating its impact through trainee feedback and supervisor observations.

Recommendation 12

BPD should add a structured community engagement or service component to its training program and evaluate its impact through trainee feedback and supervisor observations.

Program Structure and Phases

Once the initial orientation is complete, trainees enter a structured, six-month on-the-job training program divided into three phases. Each phase lasts approximately two months, and trainees rotate to a new FTO for each phase. This rotation exposes the trainee to different coaching styles and scenarios, ensuring a well-rounded experience.

During Phase 1, the trainees ride with their first FTO and is introduced to daily patrol procedures. Early in this phase, the FTO often takes the lead on calls for service while the trainee observes; as days progress, the trainee increasingly handles radio communications, suspect contacts, report writing, and other tasks under close supervision. Regular quizzes and knowledge checks are administered in this phase (FTOs give tests on penal codes, common radio codes, and likely scenarios) to reinforce academy learning. By the end of Phase 1 (~8 weeks), the trainee should be able to perform basic patrol duties with moderate FTO assistance.

In Phase 2, the trainee is expected to take a more proactive role. They work with a different FTO to gain exposure to a new coaching style and potentially a different patrol area or shift. The trainee now handles most calls with the FTO evaluating and only stepping in when necessary for safety or critical corrections. By the end of Phase 2, a trainee should be approaching a level of competency where they can handle routine calls with minimal guidance.

Phase 3 is the final evaluation phase. With yet another FTO mentor, the trainee is treated nearly as a peer officer: they are expected to self-initiate activity (traffic stops, community contacts), manage scenes, and complete detailed reports without the FTO dictating actions. The last weeks of Phase 3 are referred to as the “ghost phase,” wherein the FTO wears plainclothes and acts as an observer. The trainee answers calls alone (though the FTO is present in the car or nearby for safety), and the public typically doesn’t realize that training is technically ongoing during these interactions. This setup tests whether the trainee can function as a solo officer, and builds the trainee’s confidence.

Daily Observation Reports

Throughout all phases, daily performance is rigorously documented and reviewed. After each shift, the FTO fills out a Daily Observation Report (DOR) in BPD’s electronic FTO tracking system (LEFTA). The DOR captures the trainee’s activities and rates their performance across standardized categories (such as officer safety, radio communication, suspect handling, decision-making, report writing, etc.).

Trainees must review and sign their DOR each day in the system and are given the opportunity to add their own comments or rebuttals to any points – this acknowledgment is an important feedback loop, as it ensures the trainee is aware of deficiencies and can learn from them.

To illustrate the daily tasks and performance of FTOs and trainees, we requested real examples drawn from Daily Observation Reports (DORs) used in BPD's FTO program. BPD provided the DOR, as well as body-worn camera footage of the incident being evaluated. These vignettes demonstrate the range of scenarios new officers face – from routine tasks done well to critical mistakes – and show how FTOs document feedback and track performance over time.

- Missed Call and Situational Awareness: *An example of a "less than satisfactory" day early in Phase 1.*

  Early in field training, programs should focus on developing situational awareness, communication skills, and problem-solving under supervision. Trainees must learn to monitor radio traffic, broadcast their actions clearly, and retain critical information.

  On one shift early in Phase 1, an FTO noted multiple oversights by his trainee. The DOR for that day captured a clear pattern: the trainee's situational awareness, communication, and information retention needed improvement.

  We reviewed one specific incident from that day: a traffic stop for a missing front plate. In the DOR, the FTO wrote that the trainee was not aware of the location and did not properly broadcast their stop (this occurred prior to the start of the body-worn camera clip). On the video clip, we observed the FTO coach the trainee on properly identifying the driver, who did not have a valid driver's license, was not coming back in the system, and stated that he did not have any identification documents. The FTO told the trainee that he had to affirmatively identify the driver, provided several ideas on how to do so, and instructed the trainee to "figure it out." After establishing rapport through conversation, the driver told the trainee that he did, in fact, have an ID, and officers were able to confirm his identity. Officers allowed

the passenger -- who had a valid driver's license -- to drive the vehicle. This marked the end of the traffic stop.

This example showed proactive coaching and illustrated the FTO's role as a safety net and teacher – the FTO offered space for the trainee to problem solve in real time, while standing by to offer ideas. And, overall, the DOR for that day showed how a daily report memorializes mistakes in detail, allowing the department to track if such issues persist or improve with coaching.

- Focus on Officer Safety: *An example of room for improvement in recognizing officer safety concerns in Phase 2.*

  Field training programs must prioritize officer safety as a foundational competency. FTOs play a critical role in reinforcing situational awareness and correcting unsafe practices in real time. We reviewed an example of this real-time coaching: fifteen days into Phase 2, a BPD trainee demonstrated both a need for improvement and a willingness to learn during a call involving a subject reportedly engaged in lewd conduct.

  According to the DOR and body-worn camera footage, the trainee approached the subject and requested identification without first assessing the safety of the scene. The subject was surrounded by unidentified objects, wore baggy clothing, and had items tucked into his socks, all within arm's reach. The trainee conducted a cursory pat-down without placing the subject in a position of disadvantage.

  Recognizing the safety concerns, the FTO intervened and advised the trainee to reposition the subject and perform a more thorough search. The trainee complied, adjusting his approach.

  The FTO noted that the trainee needed to improve his overall attention to officer safety, including maintaining tactical advantage and conducting comprehensive searches. However, the report also highlighted the trainee's strong interest in protocol, his thoughtful questions, and his positive attitude toward learning. The trainee's openness to feedback and desire to grow were seen as promising indicators of future success.

- Problem-Solving in Non-Critical Conditions: *An example of accuracy and decision-making in non-critical conditions in Phase 3.*

  Field training programs should emphasize decision-making and procedural accuracy in routine, non-critical calls. Trainees must demonstrate initiative, attention to detail, and familiarity with documentation. We reviewed one clear example of this: ten days into Phase 3, a trainee demonstrated strong problem-solving and decision-making skills during two routine calls, as documented in the DOR and supported by body-worn camera footage.

  In the first incident, the trainee observed an unoccupied vehicle that appeared to have been involved in a traffic collision. Using the Mobile Data Terminal, the trainee identified the vehicle as stolen, contacted the registered owner by phone, and completed a CHP-180 form to document the recovery. Although the body-worn camera did not capture the full resolution of the call, the FTO noted that the trainee closed out the incident appropriately and independently.

  Later that shift, the trainee responded to a petty theft call at a retail store. He reviewed surveillance footage, captured screenshots of the suspect, collected detailed information from the reporting party, and provided a report number to the store's loss prevention team. When prompted by the FTO, the trainee obtained an itemized receipt to complete the documentation. The body-worn camera clip ended shortly thereafter, but the FTO's report noted that the trainee and FTO canvassed the area and located a suspect matching the description.

  The FTO commended the trainee's attention to process and detail, noting that his methodical approach made both calls easy to manage and effective. The FTO also advised that improving speed and efficiency would further enhance the trainee's patrol readiness. This highlighted the trainee's ability to apply investigative tools, follow procedure, and respond thoughtfully to routine calls. It also reflects the FTO's role in reinforcing best practices and coaching the trainee toward greater efficiency.

- Compassion and command presence: *An example of the varied responses needed when responding to different calls for service late in Phase 3.*

Field training programs should prepare trainees to adapt their demeanor and tactics based on the nature of the call. Late in Phase 3, a trainee demonstrated this adaptability across two distinct calls for service, as documented in DORs from days 12 and 16.

On day 12, the trainee responded to a sexual battery call. The FTO commended the trainee's tactful and thorough approach. Body-worn camera footage showed the trainee engaging the survivor with compassion and professionalism, advising her that he might ask personal questions and offering breaks if needed. He asked detailed, respectful questions and apologized when asking more probative questions, maintaining confidence while navigating a sensitive interview. This interaction reflected the trainee's ability to apply trauma-informed practices and build trust with a vulnerable community member. [31]

Four days later, on day 16, the trainee responded to a suspicious vehicle call. Here, he displayed a markedly different approach: assertive and tactically safe. The body-worn camera showed the trainee approaching the driver with command presence, coordinating with his FTO who approached the passenger side. When the FTO observed drug paraphernalia in the driver's hand, he alerted the trainee, who then ordered the driver out of the vehicle. When the driver refused, the trainee opened the door and calmly escorted him out. The driver became agitated, and the trainee de-escalated by speaking in the driver's native language and modulating his tone, raising his voice briefly to gain control, then lowering it once compliance was achieved.

During the consent search of the vehicle, the trainee located a large number of keys and the FTO found bolt cutters. The trainee consulted the FTO, who advised that these items were suspicious. The trainee then determined that Miranda advisement was appropriate and proceeded with

[31] If anything, at times the trainee's careful approach seemed *better* suited to the needs of the woman being interviewed than that of his training officer. We noted a couple of instances in which the FTO interjected (presumably in an effort to help advance the process), and in a way that seemed relatively jarring to the woman. It made the trainee's sensitive handling of the encounter all the more impressive.

questioning, which the driver refused. Later, the FTO guided the trainee through the impound process, which the trainee completed successfully.

These two clips illustrated the trainee's ability to shift between compassion and authority, depending on the call. It also highlighted the strong rapport between the trainee and FTO, marked by open communication, real-time guidance, and collaborative problem-solving. The trainee's confidence in asking questions and the FTO's responsive mentorship exemplify the kind of dynamic that supports growth.

This DOR also noted that FTOs and trainees practiced "role playing" Field Sobriety Tests on each other, and that the FTOs provided feedback for administering the tests as well as proper report-writing for these incidents. Here, we see implementation of the Reno Model, which emphasizes scenario-based role play as a training tactic. The FTO also noted that he quizzed the trainee on the five most commonly used Burbank Municipal Codes and the practical application of these codes while on patrol.

- Balancing Independence with Fundamentals: *An example of demonstrating initiative while reinforcing core skills.*

  As trainees approach the end of field training, they should demonstrate initiative, sound judgment, and the ability to operate independently – all while maintaining the core skills they acquired during Phases 1 and 2, such as thorough and accurate report-writing. On Day 25 of Phase 3, the FTO documented commendable performances by his trainee, which showed strong investigative instincts and initiative.

  But the shift also highlighted areas for improvement in documentation. During the shift the trainee made several reporting errors that required correction: the FTO emphasized the importance of reporting accuracy, especially as the trainee neared the end of Phase 3.

  We reviewed body-worn camera footage for one of these: the trainee completing the booking process. While the trainee was methodical and precise in the process, according to the DOR, the trainee submitted a form with inaccurate information, which was caught by the Watch Commander and corrected by the FTO. This example illustrated the balance between

growing independence and the continued need for attention to detail. The FTO's feedback and coaching ensured that the trainee remained focused on core skills while becoming more independent.

- Managing Stress and Maintaining Protocol: *An example of keeping a calm demeanor and focusing on proper procedures, especially when responding to high-stress calls for service.*

  Field training programs should prepare trainees to manage stress effectively while maintaining procedures. Trainees must demonstrate calm decision-making, safe driving practices during emergency responses, and adherence to investigative protocols. We observed these in a DOR that occurred toward the end of Phase 3: a trainee demonstrated composure across multiple high-stress calls.

  During a Code-3 response to an injury traffic collision, the trainee maintained control while driving with lights and sirens, choosing the most direct route and avoiding overdriving. Upon arrival, he calmly contacted each of the victims and conducted a methodical investigation. The FTO noted that the trainee completed all necessary documentation independently and that he used the incident as an opportunity to review the mission and responsibilities of the Traffic Bureau.

  Later in the same shift, the trainee responded to two additional high-stress calls, including one involving a person experiencing a mental health crisis and self-harming. In each case, the FTO reported that the trainee demonstrated sound judgment, emotional steadiness, and appropriate tactical response (we did not review the body-worn camera footage for these calls).

  The FTO commended the trainee's ability to remain focused and professional under pressure, which reflects BPD's emphasis on preparing trainees to navigate emotionally charged situations with clarity, confidence, and procedural accuracy.

These example cases collectively show how the FTO program documents a trajectory from mistakes to mastery. Early on, DORs might read like detailed lists of errors (missed radio calls, poor geographic awareness, etc.), but as

training progresses, the tone shifts to documenting solid, acceptable police work and occasional commendations for excellent performance.

Because each DOR is preserved in the LEFTA system, BPD's training coordinators and command staff can track each trainee's development. For example, if an officer had recurring issues with situational awareness in multiple DORs, the program leaders would flag that and perhaps adjust training. Conversely, improvements would be evident if later DORs no longer mention those problems.

Ultimately, this review underscored that field training is a daily educational process. Every patrol shift becomes a classroom. The FTOs not only supervise but also document the learning that occurs to gauge how well new officers are being prepared for solo service.

End-of-Phase Reports

At the end of each phase, a more formal End-of-Phase Report is prepared. This report summarizes the trainee's performance over that phase, documents any remedial training completed, and recommends whether the trainee should advance to the next phase. The End-of-Phase report is reviewed and signed by the FTO Supervisor, the FTO Program Lieutenant, and the Patrol Division Captain. This chain-of-command review enforces oversight: it ensures multiple levels of leadership agree the trainee has met the required competencies to progress.

If a trainee is not ready to advance, the program can "re-phase" them – meaning they repeat the phase with a new or extended training plan. BPD policy allows one re-phase opportunity for a trainee to improve in deficient areas. In some cases, targeted remedial training will be assigned during the re-phase; for instance, if a trainee struggled with conducting searches properly, they might be sent for a day of intensive remedial training on search techniques (e.g. practicing searches on arrestees at the jail under supervision).

We looked at several recent examples of End of Phase reports that were provided by BPD at our request. The reports follow a template that guides the

FTO toward capturing both the most and least acceptable aspects of trainee performance during the phase. One "Phase 1" report listed multiple examples in each category, with specific supporting details. ("In the last two weeks, he only used his map once...and was arriving to locations in a timely manner." And, less favorably, "...there were at least three instances when he allowed the detainee to dictate the interaction...and in one instance allowed a detainee to enter a vehicle."). The mixture of genuine praise and fair criticism reflected the thoughtfulness of the preparer's evaluation, and a true understanding of the trainee's strengths and weaknesses.[32]

While other sample reports were less detailed, each was convincingly individualized. While many of the same issues came up in multiple reports (geography, handling of radio traffic, report writing, officer safety), it was interesting to note that the trainees often differed from each other as to whether a given topic fell into the positive or negative side of the ledger.

As the phases progressed, the end of phase reports often became more concise – an evolution that seemed commensurate with the expected development of the officers as they advanced through the program and gained experience. Importantly, the reports also listed out the interventions that were used to address noted shortcomings. And a part of the template is for listing and description of any "remedial training" necessary.

Those who do succeed in all three phases are released from the FTO program and continue to work independently for the remainder of their 12-month probation. During that post-FTO probationary period, training staff continues to monitor the new officers' progress informally – field supervisors keep an eye on their reports and tactics, and any slip in performance can be addressed with additional coaching. By the one-year mark, the officer's overall performance is assessed again before they are considered fully past probation.[33]

---

[32] Where relevant, the reports also tended to put individual issues into a larger context of typical challenges for new officers, and part of a normal arc that trainees travel along. This experienced perspective helps FTO's draw useful distinctions between real concerns and "rookie mistakes."

[33] In this first year of service while on probation, new hires may be released for any performance related concerns.

One suggestion for further strengthening the evaluation program would be the addition of formal problem-solving exercises or written self-assessments from trainees at the end of phase period. For example, BPD could ask trainees in Phase 3 to write a brief reflection on a significant incident they handled. This would address the critique that traditional programs may not promote enough reflective learning. BPD might also consider assigning each trainee a community project or mini-study (like analyzing a specific crime problem in their area) during training to foster broader thinking.

Recommendation 13

BPD should consider incorporating formal problem-solving exercises or written self-assessments from trainees to promote reflective learning and assign trainees a community-based project to foster broader thinking.

Falling Out: Extending Phases or Separation

Nationwide, agencies report that roughly 10% of trainees “fall out” (do not advance) by the end of a given phase and require re-phasing or remediation. If after remediation a trainee still cannot meet performance standards, or if serious issues arise, the trainee may be separated from the department. BPD has historically seen an overall attrition rate of about 24% in the field training program. Much of this attrition is due to trainees self-selecting out of the career (resigning when it becomes clear the job or the scrutiny of training isn’t for them) rather than outright terminations, according to program data.

On the remedial side, BPD does well: they have a structured plan for remediation (additional training, re-phasing) which is a best practice to salvage those who have potential but need more time. Not all departments formally allow re-phasing; BPD’s willingness to extend training for those showing progress aligns with a modern view that sometimes a rigid time limit is not right for every individual.

BPD provided two examples of trainees who, unfortunately, did not meet the Department's standards and were separated from the program. This is surely disappointing to the involved officer, as well as to the agency that has invested time, money and attention and that depends so heavily on staffing to accomplish its responsibilities. At the same time, it reflects well on the program in one important sense: maintaining standards of competent performance in the field is seemingly recognized as so important that it overrides the incentives to look past a marginal employee's limitations.

We had the opportunity to assess the "close-out" packages which explained in detail the unsuccessful arc of the trainee's time in the program, and the basis for the determination that further remediation would likely not be sufficient to overcome identified challenges. We found them to be impressive in their thoughtfulness, thoroughness, and specificity; it seemed clear that the trainees had been given every opportunity to succeed, and that the decision to end their tenure with the agency was made correctly.[34]

The first trainee had been in the program for five months. Not only had the officer not progressed in fixing the various shortcomings in his performance, but he had also seemingly regressed in some areas. Training officers found his engagement level to be curiously low and were puzzled by his seeming reluctance to talk through performance challenges. Efforts at remediation were documented (and often added up to several hours on a given topic).

The other trainee was in the program for three months; this trainee was found to continuously underperform in every critical aspect of policing in the field, even after extensive, documented, extra training outside of the formal program by two FTOs. For example, even after twenty extra hours of report-writing training, the trainee made no progress in this skill, taking hours to complete a basic report with repeated errors that required correction. Beyond this, however, the FTOs suspected that the trainee may have integrity issues, and his high scores on paper tests did not align with his knowledge in the field. And FTOs noted challenges with his professionalism when engaging with members of the public.

[34] The officers are given the opportunity to voluntary resign from the agency, which is presumably helpful for future employment prospects (though other law enforcement agencies would nonetheless be on notice of concerns).

These two cases, while unfortunate, underscore a critical strength of the program: a clear commitment to maintaining professional standards, even when doing so is difficult. In a profession where public trust and operational effectiveness hinge on the quality of individual officers, the ability to recognize and act on persistent deficiencies is essential.

Wellness and Resilience for FTOs and Trainees

One emerging best practice area is ensuring the wellbeing of both trainees and their FTOs. Field training is stressful for both parties: trainees are under intense scrutiny, and FTOs have the weight of constant evaluation and dual responsibility of patrol and teaching.

The IACP has promoted resilience strategies for FTOs, encouraging departments to help FTOs avoid burnout and cynicism by providing support resources, training in stress management, and reasonable rotations (not overusing the same FTO continuously).[35] Some agencies cap how many back-to-back training cycles an FTO can do before a break to prevent fatigue. BPD does consider FTO workload – with 12 FTOs for about 10 trainees at a time, they can spread out assignments.

For trainees, best practices include taking mental health into account: for example, if a trainee has a particularly traumatic call (a gruesome scene or a child death), a good program will ensure a debrief with a peer support or counselor if needed, not just an evaluation on the daily observation reports. Currently, BPD does not have a formal mechanism for trainees to meet together for debriefing or peer support, outside of their daily one-on-one feedback from FTOs. Program leadership identified this as a gap – while FTOs meet monthly to discuss trainees, the trainees do not have similar

[35] See strategies at https://www.theiacp.org/sites/default/files/2024-05/Resilience_Strategies_FTOs.pdf

regular meet-ups to collectively discuss their experiences or stressors. Establishing a periodic trainee debrief or mentoring session could help new officers process the challenges of field training (a recommendation the department is now considering). This kind of support can bolster resilience and mental health for trainees who are under significant pressure to perform during their probation.

Recommendation 14

BPD should develop a structured program for trainees to meet regularly to debrief and for peer support.

On the positive side, BPD's culture of involving multiple FTOs means no single mentor has undue influence or burden the entire time, which can mitigate overattachment or bias. Going forward, as a best practice, BPD might implement a short "check-in" meeting with each trainee class by a psychologist or peer support team, separate from evaluation, to discuss stress and coping. Additionally, ensuring FTOs themselves have support (perhaps periodic meetings among FTOs not just to discuss trainees tactically, but also to vent frustrations or share support strategies for themselves) can improve the program.

Recommendation 15

BPD should implement a short "check-in" meeting with each trainee class by a psychologist or peer support team, separate from evaluation, to discuss stress and coping.

Recommendation 16

BPD should develop periodic wellness sessions for FTOs to vent frustrations or share support strategies for themselves.

BPD Accomplishments

Each year, our office asks the Department to provide highlights from the prior calendar year so that we can inform and educate the public and the City Council. While these are not subjects of our routine review process, we nonetheless include this summary annually because it offers useful context about operational initiatives and performance indicators that matter to the community.

According to the Department, emergency response remained a core emphasis, with an average emergency response time of two minutes and thirty-eight seconds. The Department offered this metric as a current performance indicator of its commitment to rapid response when emergencies arise. The Department also reports that it launched a Community Service Officer (CSO) program, assigning trained non-sworn personnel to tasks such as basic report-taking, traffic control and parking enforcement, and community outreach. The stated rationale is to preserve sworn capacity for priority calls and investigative work while maintaining service levels for lower-risk assignments.

Internally, the agency introduced a new wellness program intended to support both sworn and professional staff. The initiative emphasizes physical fitness, nutrition, and broader well-being, with the expressed aim of sustaining a resilient workforce and strengthening decision-making and service delivery.

The Department further expanded the Mental Health Evaluation Team (MHET) by adding a clinician-officer pairing on Fridays and Saturdays, raising the team's days of service from four to six per week to better align coverage with periods of higher call volume and community need. As context, our office has previously conducted an audit of BPD's response to mental-health-related calls, including the operations of MHET, and found performance in this area to

be strong. The added coverage builds on a positive foundation and demonstrates the Department's continued commitment to timely, specialized responses for individuals in crisis.

The Department reported achieving a new four-year accreditation through the Commission on Accreditation for Law Enforcement Agencies (CALEA). This accreditation is earned by meeting externally developed standards of excellence in policy, procedures, operations, and service, and reflects an ongoing commitment to professionalism, accountability, and continuous improvement.

Finally, the Department highlighted continued investment in technology, including expansion of Automated License Plate Recognition (ALPR) tools and integration with the FUSUS real-time crime center platform to enhance situational awareness and investigative capacity in the field.

We appreciate the Department's willingness to share these developments.

Conclusion

Our 2025 review of the Department affirms the Department's continued commitment to accountability, transparency, and professional development. The Department has made meaningful strides in refining its internal review systems, particularly in the areas of misconduct investigations and use of force oversight. These efforts reflect a culture of responsiveness and a continued willingness to evolve in alignment with best practices.

Looking ahead, BPD should continue to refine its pursuit policies to ensure clarity and consistency across operations. This includes articulating a more defined "pursuit philosophy" and reinforcing it through targeted training and supervisory guidance. Enhancing scenario-based training, especially in defensive tactics, vehicle pursuits, and de-escalation, will further equip officers to respond effectively in dynamic situations.

We also encourage the Department to integrate structured community engagement into its field training program. By embedding relationship-building into the early stages of officer development, BPD can foster trust and mutual understanding with the public it serves. In parallel, wellness initiatives for both trainees and their FTOs should be expanded to promote resilience and mental health throughout the organization.

We also want to acknowledge and express our appreciation for the time and effort BPD staff dedicated to supporting this review process. Their timely responses and provision of thorough data were instrumental in enabling our work. As the Department transitions to new command leadership, we look forward to continuing our collaborative relationship and supporting BPD's ongoing efforts.

Recommendations

1: BPD should reinforce the principle that intake interviews with complainants are primarily intended to acquire a full understanding of their allegations and concerns – and not as a forum for rebuttal or defense of officer actions.

2: BPD should address employees' suboptimal performance issues that emerge in the context of complaint cases, even when the identified issues don't rise to the level of formal policy violations.

3: BPD should refine its agency-wide understanding of "de-escalation" techniques to maintain emphasis on tactics and strategies that lessen the likelihood of physical force being necessary.

4: BPD should encourage supervisors to prioritize the objective acquisition of detailed statements of individuals upon whom force was used and other witnesses where possible.

5: BPD should continue to include recorded interviews with arrestees and civilian witnesses as part of its routine CIRB process.

6: BPD should explore "micro training" in defensive tactics to provide more regular review of hand-on / empty hands techniques.

7: BPD should continue to ensure that current training of its police service dogs is reflective of evolving legal standards and should ensure that a rigorous review of bite incidents continues to be part of its CIRB process.

8: BPD should routinely review Taser Deployment Logs and direct supervisors to address anomalies (such as trigger rejections or multiple activations) through documented explanation or other needed intervention.

9: BPD should consider eliminating the concept of Assessment Period from Policy 314.

10: BPD should conduct frequent and repeated scenario-based vehicle pursuit training during daily briefings as practicable to reinforce best practices.

11: Before drafting an updated pursuit policy, BPD should clearly define its "pursuit philosophy," and use this exercise to develop policy, training, and supervisory expectations that align with this philosophy.

12: BPD should add a structured community engagement or service component to its training program and evaluate its impact through trainee feedback and supervisor observations.

13: BPD should consider incorporating formal problem-solving exercises or written self-assessments from trainees to promote reflective learning and assign trainees a community-based project to foster broader thinking.

14: BPD should develop a structured program for trainees to meet regularly to debrief and for peer support.

15: BPD should implement a short "check-in" meeting with each trainee class by a psychologist or peer support team, separate from evaluation, to discuss stress and coping.

16: BPD should develop periodic wellness sessions for FTOs to vent frustrations or share support strategies for themselves.

MEMORANDUM

POLICE DEPARTMENT

DATE: October 14, 2025

TO: Justin Hess, City Manager

FROM: Rafael Quintero, Chief of Police
BY: Adam Cornils, Deputy Chief
Viviana Garzon, Police Administrator

SUBJECT: Response to the Office of Independent Review Group Recommendations in the 2024 Annual Report of the Independent Police Monitor

BACKGROUND

Pursuant to the Independent Police Monitor agreement with the City of Burbank, the Office of Independent Review (OIR) Group conducted its annual review and analysis of Burbank Police Department (Department). The review covered areas such as critical incidents, use of force incidents, vehicle pursuits, and the Department's Field Training Program. The Department values OIR's thorough evaluation as an important tool for continuous improvement and for ensuring the delivery of high-quality public safety services to the Burbank community.

DISCUSSION

The 2024 annual report provided 16 recommendations. Below is the Department's response to each of the OIR Group's recommendations:

Recommendation 1:

BPD should reinforce the principle that intake interviews with complainants are primarily intended to acquire a full understanding of their allegations and concerns – and not as a forum for rebuttal or defense of officer actions. *Page 11*

The Department generally agrees with this recommendation and will incorporate it into upcoming supervisor training sessions. The Department also recognizes the value to be had in dialogue between supervisors and complainants, where clarifying

misunderstandings or asking probing questions may be necessary, while stopping short of defensive rebuttals or arguments.

Recommendation 2:
BPD should address suboptimal performance that emerge in the context of complaint cases, even when the identified issues don't rise to the level of formal policy violations. *Page 12*

The Department agrees with this recommendation. In 2025, the Department has been addressing suboptimal performance uncovered during administrative investigations, which do not amount to formal policy violations, via directed counseling / training conversations, which are then documented in a comment card and side memo associated to the investigations.

Recommendation 3:
BPD should refine its agency-wide understanding of "de-escalation" techniques to maintain emphasis on tactics and strategies that lessen the likelihood of physical force being necessary. *Page 16*

The Department will incorporate this recommendation into upcoming supervisor training sessions.

Recommendation 4:
BPD should encourage supervisors to prioritize the objective acquisition of detailed statements of individuals upon force was used and other witnesses where possible. *Page 17*

The Department agrees with this recommendation and will incorporate it into upcoming supervisor training sessions.

Recommendation 5:
BPD should continue to include recorded interviews with arrestees and civilian witnesses as part of its routine CIRB process. *Page 17*

The Department agrees with this recommendation. The Department is currently revamping its process for the investigation of critical incidents, with a focus on optimizing the use of available technology and software platforms. This will eliminate steps and allow supervisors to directly link and attach recordings to the investigative file, instead of the more cumbersome practice of downloading and copying recordings to media devices such as compact discs and USB drives, which creates opportunities for files to be overlooked.

Recommendation 6:
BPD should explore "micro training" in defensive tactics to provide more regular review of this most commonly used force option. *Page 19*

The Department agrees with this recommendation and will explore having the Training Bureau develop a curriculum of Defensive Tactics training sessions, suitable for regular presentation in briefings and Roll Call trainings.

Recommendation 7:
BPD should ensure that current training of its police service dogs is reflective of evolving legal standards and societal expectations and should ensure that a rigorous review of bite incidents continues to be part of its CIRB process. *Page 22*

The Department has a robust training regimen for its police service dogs, handlers, and supervision, which includes ongoing legal updates. The Department recognizes the potential concerns, as well as the tremendous value, in the effective deployment of police service dogs, and will continue to ensure a rigorous review of their deployments.

Recommendation 8:
BPD should routinely review Taser Deployment Logs as part of their protocols. Logs that reflect anomalies, such as trigger rejections, or multiple activations should prompt supervisory commentary on justification, tactical reasoning, and any necessary intervention. *Page 25*

The Department is now including the Training Coordinator in the review process, prior to the overall CIRB meeting, and will ensure the deployment logs are reviewed and issues as mentioned are reconciled in the process.

Recommendation 9:
BPD should consider eliminating the concept of Assessment Period from its policy. *Page 31*

The Department agrees with this recommendation and eliminated the "Assessment Period" concept from its pursuit policy during an update published in August, 2025.

Recommendation 10:
BPD should conduct frequent and repeated scenario-based vehicle pursuit training during daily briefings as practicable to reinforce best practices. *Page 33*

The Department agrees with this recommendation and will examine opportunities to incorporate tabletop exercises, video reviews, and other scenario-based training vignettes into its Roll Call training schedule.

Recommendation 11:
Before drafting an updated pursuit policy, BPD should clearly define its "pursuit philosophy," and use this exercise to develop policy, training, and supervisory expectations that align with this philosophy. *Page 35*

The Department will discuss and define its "pursuit philosophy" during upcoming meetings of the Management Team and Executive Staff as it seeks to refine its pursuit policy to meet public safety expectations in the coming year.

Recommendation 12:
BPD should add a structured community engagement or service component to its training program and evaluate its impact through trainee feedback and supervisor observations. *Page 42*

The Department emphasizes trainees' participation in community engagement activities. Training units are regularly incorporated and expected to participate in events such as "Coffee with a Cop," National Night Out, and other community events. The Department will ensure the Field Training Program is documenting the trainees' participation, observations, and feedback in their evaluations and reports.

Recommendation 13:
BPD should consider incorporating formal problem-solving exercises or written self-assessments from trainees to promote reflective learning and assign trainees a community-based project to foster broader thinking. *Page 52*

The Department will explore incorporating problem-solving and self-assessment exercises in Field Training. Based on the structured nature of the Field Training Program and the need to expose the trainee to a variety of investigative and field procedures, the Department expects the community-based project suggestion to be better suited to incorporation during the time when an officer has graduated from Field Training and is working independently on probation, under the guidance of a field supervisor.

Recommendation 14:
BPD should develop a structured program for trainees to meet regularly to debrief and for peer support. *Page 55*

The Department is currently working to enhance its overall peer support program and will explore incorporating a structured program for trainees as part of this.

Recommendation 15:
BPD should implement a short "check-in" meeting with each trainee class by a psychologist or peer support team, separate from evaluation, to discuss stress and coping. *Page 55*

The Department will explore including this in the training time that trainees undergo in between their graduation from the Academy and immersion in the Field Training Program.

Recommendation 16:
BPD should develop periodic wellness sessions for FTOs to vent frustrations or share support strategies for themselves. *Page 55*

The Department will explore incorporating this suggestion periodically during its scheduled monthly FTO meetings.

CONCLUSION
The OIR Group's annual review provides significant value to the Burbank community by ensuing accountability, transparency, and continuous improvement within the Department. By evaluating critical areas of operations, the review enhances public safety, promotes equity, and reinforces the trust between the Department and the community.

ATTACHMENT:
None

CITY OF BURBANK
CITY COUNCIL MINUTES
JOINT MEETING WITH THE HOUSING AUTHORITY
TUESDAY, SEPTEMBER 30, 2025

Call to Order:
A Closed Session Meeting of the City Council of the City of Burbank was held in the Council Chamber, 275 East Olive Avenue, on the above date. The meeting was called to order at 4:03 p.m. by Mayor Perez.

Present: Council Member(s) Anthony, Mullins, Rizzotti, Vice Mayor Takahashi, and Mayor Perez
Absent: None
Also Present: City Manager Hess, Chief Assistant City Attorney Vander Borght, and City Clerk Clark

Closed Session Public Comment:
There being no response to the Mayor's invitation for Public Comment on Closed Session matters, the City Council recessed at this time to the City Hall First Floor Conference Room to hold a Closed Session on the following:

1. Conference with Legal Counsel - Existing Litigation
   a. Pursuant to Govt. Code §54956.9(d)(1)
   b. Name of Case: Iuliia Skrypka v. Andrew Ohanian, et al.
   c. Case No.: 25NNCV02215
   d. Brief description and nature of case: Personal Injury - Auto accident

2. Conference with Real Property Negotiator
   a. Pursuant to Govt. Code §54956.8
   b. Property: 2244 N. Buena Vista St., Burbank, CA 91504
   c. Parties Whom Agency or City is Negotiating with: Home Again LA (HALA)
   d. City Negotiator: Simone McFarland, Assistant Community Development Director – Business & Economic Development
   e. Terms Under Negotiation: Insurance requirements and monthly rent

3. Conference with Real Property Negotiator
   a. Pursuant to Govt. Code §54956.8
   b. Property: Burbank Town Center - Burbank Center Stage Home of The Colony Theatre - 555 North Third Street, Burbank, CA 91502
   c. Parties Whom Agency or City is Negotiating with: Onni Burbank Town Center LLC, 1031 S. Broadway, Suite 400, Los Angeles, CA - Peter Park; The Colony Theatre Company, 555 North Third Street, Burbank, CA - Heather Provost
   d. City Negotiator: Marisa Garcia, Parks and Recreation Director
   e. Terms Under Negotiation: Terms for the Sublease and Master Lease Modification

The meeting reconvened at 6:09 p.m. with all Council Members present.

Call to Order:
A Joint Meeting of the City Council and the Housing Authority of the City of Burbank was held in the Council Chamber, 275 East Olive Avenue, on the above date. The meeting was called to order at 6:09 p.m. by Mayor Perez.

Moment of Reflection:
Mayor Perez held a Moment of Reflection to begin the meeting with positive and collective support for our beloved community.

Flag Salute:
The Pledge of Allegiance was led by Mayor Perez.

Roll Call:
Present: Council Member(s) Anthony, Mullins, Rizzotti, Vice Mayor Takahashi, and Mayor Perez
Absent: None
Also Present: City Manager Hess, Chief Assistant City Attorney Vander Borght, and City Clerk Clark

Announcements:
Mayor Perez displayed a PowerPoint presentation announcing the following: (1) Burbank Housing Corporation Board of Directors Vacancy; (2) Clean Air Day; (3) Burbank Animal Shelter Adoption Event; (4) Sustainable Burbank Commission Vacancy; (5) Art in Public Places Committee Vacancy; and (6) Infrastructure Oversight Board Vacancy.

Council Presentations/Recognitions:

1. Presentation of a Certificate of Recognition to the Burbank Boys U10 All-Stars for Earning the Title of the AYSO National Champions
   Mayor Perez presented a Certificate of Recognition to the Burbank Boys U10 All-Stars for earning the title of the AYSO National Champions. Mrs. Julie Gurian accepted the certificate on behalf of Coach Gurian and the team.

2. Presentation of a Proclamation Declaring October 5-11, 2025, as “Fire Prevention Week” in the City of Burbank
   Mayor Perez presented a Proclamation declaring October 5-11, 2025, as “Fire Prevention Week” in the City of Burbank and introduced Danny Alvarez, Burbank Fire Chief, and Jim Moye, Fire Marshal, who made remarks.

City Manager Report:
City Manager Hess introduced Damian Skinner, Interim Public Works Director, who made remarks; Taj Graham, Plan Check Engineer, who provided an update on the ProjectDox program; and Kimberley Clark, City Clerk, who announced the Passport Acceptance Facility's 10th anniversary celebration.

Reporting on Closed Session:

Chief Assistant City Attorney Vander Borght reported that the City Council met in Closed Session regarding the agendized Closed Session items and City Council took no reportable action.

Joint General Public Comment:
Appearing to comment were: Ron Bax, Monica Moye, Mark Scroggs, Eric Hawk, Andrés Garcia, Susan O'Carroll, Elizabeth Bax, Diana Pulver, Daniel, Jo Pimienta, Jackie Waltman, Harry Timuryan, and David Donahue.

Calling in to comment were: Earle LeMasters, Anonymous, Graham Matthews, and Laura Ioanou.

Council, City Manager, and/or City Attorney Comment:
Council Members and Staff responded to Public Comment.

Consent Calendar:
It was moved by Council Member Anthony, seconded by Council Member Mullins, and carried 5-0 by roll call vote to approve the Consent Calendar. The motion carried 5-0 with the following roll call vote: AYES: Anthony, Mullins, Rizzotti, Takahashi, and Perez. NOES: None.

1. City Council Minutes

   Approve the City Council Minutes of the Joint Meeting of September 9, 2025, and the Dark Meetings of September 16 and September 23, 2025.

2. Housing Authority Minutes

   Approve the Housing Authority Minutes of the Joint Meeting of September 9, 2025.

3. Adoption of a Resolution Approving the Fiscal Year 2025-2026 Homeless Incentive Program Interagency Agreement between the Los Angeles County Development Authority and the Housing Authority of the City of Burbank (BHA), Awarding the BHA $99,888 for Fiscal Year 2025-26; and Authorize the City Manager or His Designee to Execute the Agreement and Any Future Amendments (with Housing Authority)

   RESOLUTION NO. H-25-274
   Adopt A RESOLUTION OF THE HOUSING AUTHORITY OF THE CITY OF BURBANK APPROVING THE FISCAL YEAR 2025-26 HOMELESS INCENTIVE PROGRAM (HIP) INTERAGENCY AGREEMENT BETWEEN THE LOS ANGELES COUNTY DEVELOPMENT AUTHORITY (LACDA) AND THE HOUSING AUTHORITY OF THE CITY OF BURBANK (BHA), AWARDING THE BHA $99,888 FOR FISCAL YEAR 2025-26; AND AUTHORIZE THE CITY MANAGER OR HIS DESIGNEE TO EXECUTE THE AGREEMENT AND ANY FUTURE AMENDMENTS.

4. Adoption of a Resolution Authorizing the City Manager to Execute a Design-Build Contract with Musco Sports Lighting, LLC. and Delegating Authority to the Parks and Recreation Director to Approve Plans and Specifications for Equipment to Upgrade the Existing 1500-Watt Metal-Halide Lighting at Robert E. Gross Park Ballfields to Light-Emitting Diode Technology

   RESOLUTION NO. 25-29,644
   Adopt A RESOLUTION OF THE COUNCIL OF THE CITY OF BURBANK AUTHORIZING THE CITY MANAGER TO EXECUTE A DESIGN-BUILD CONTRACT WITH MUSCO SPORTS LIGHTING, LLC. AND DELEGATING AUTHORITY TO THE PARKS AND RECREATION DIRECTOR TO APPROVE PLANS AND SPECIFICATIONS FOR EQUIPMENT TO UPGRADE THE EXISTING 1500-WATT METAL-HALIDE LIGHTING AT ROBERT E. GROSS PARK BALLFIELDS TO LIGHT-EMITTING DIODE TECHNOLOGY.

5. Adoption of a Resolution Authorizing the Execution of a Grant Agreement with LA84 Foundation 26 Champions to Support the City of Burbank's Adaptive Soccer Program and to Promote Inclusive Soccer Opportunities in the Amount of $26,000, Authorizing the City Manager, or Designee to Execute the Agreement, and Amending the Adopted Fiscal Year 2025-2026 Budget by Appropriating Funds

   RESOLUTION NO. 25-29,645
   Adopt A RESOLUTION OF THE COUNCIL OF THE CITY OF BURBANK AUTHORIZING THE EXECUTION OF A GRANT AGREEMENT WITH THE LA84 FOUNDATION 26 CHAMPIONS TO SUPPORT THE CITY OF BURBANK'S ADAPTIVE SOCCER PROGRAM AND TO PROMOTE INCLUSIVE SOCCER OPPORTUNITIES, AUTHORIZING THE CITY MANAGER, OR DESIGNEE TO EXECUTE THE AGREEMENT, ACCEPTANCE OF GRANT FUNDS IN THE AMOUNT OF $26,000, AND AMEND THE ADOPTED FISCAL YEAR 2025-2026 BUDGET BY APPROPRIATING FUNDS.

6. Adoption of a Resolution Authorizing the Execution of a Grant Agreement with the National Recreation and Park Association in the Amount of $2,500 to Support Youth Sports Coach Training, Authorizing the City Manager, or Designee to Execute the Agreement, Acceptance of Grant Funds, and Amending the Adopted Fiscal Year 2025-2026 Adopted Budget

   RESOLUTION NO. 25-29,646
   Adopt A RESOLUTION OF THE COUNCIL OF THE CITY OF BURBANK AUTHORIZING THE EXECUTION OF A GRANT AGREEMENT WITH NATIONAL RECREATION AND PARK ASSOCIATION IN THE AMOUNT OF $2,500 AND IN-KIND TRAINING FROM POSITIVE COACHING ALLIANCE TO SUPPORT YOUTH SPORTS COACH TRAINING, AUTHORIZING THE CITY MANAGER, OR DESIGNEE TO EXECUTE THE AGREEMENT, ACCEPTANCE OF GRANT FUNDS, AND AMEND THE ADOPTED FISCAL YEAR 2025-2026 BUDGET BY APPROPRIATING FUNDS.

7. Adoption of a Resolution Acknowledging Receipt of the Fiscal Year 2024-25 Fire Inspection Performance Report

   RESOLUTION NO. 25-29,647
   Adopt A RESOLUTION OF THE COUNCIL OF THE CITY OF BURBANK ACKNOWLEDGING RECEIPT OF THE FISCAL YEAR 2024-25 FIRE INSPECTION PERFORMANCE REPORT REGARDING REQUIRED ANNUAL INSPECTIONS IN OCCUPANCIES PURSUANT TO SECTIONS 13146.2, 13146.3, AND 13146.4 OF THE CALIFORNIA HEALTH AND SAFETY CODE.

8. Adoption of Resolutions Approving the Establishment of the Salary and Conflict of Interest Code Designation for the Classifications of Network Engineer, Lead Network Engineer, and Principal Network Engineer; Adoption of a Resolution Approving the Revision of the Title and Specification for the Classifications of Park, Recreation, and Community Services Director, Assistant Park, Recreation, and Community Services Director, and Secretary to the City Manager; and Adoption of a Resolution Approving the Citywide Salary Schedule

   RESOLUTION NO. 25-29,648
   Adopt A RESOLUTION OF THE COUNCIL OF THE CITY OF BURBANK APPROVING THE ESTABLISHMENT OF THE SALARY AND CONFLICT OF INTEREST CODE DESIGNATION FOR THE CLASSIFICATION OF NETWORK ENGINEER.

   RESOLUTION NO. 25-29,649
   Adopt A RESOLUTION OF THE COUNCIL OF THE CITY OF BURBANK APPROVING THE ESTABLISHMENT OF THE SALARY AND CONFLICT OF INTEREST CODE DESIGNATION FOR THE CLASSIFICATION OF LEAD NETWORK ENGINEER.

   RESOLUTION NO. 25-29,650
   Adopt A RESOLUTION OF THE COUNCIL OF THE CITY OF BURBANK APPROVING THE ESTABLISHMENT OF THE SALARY AND CONFLICT OF INTEREST CODE DESIGNATION FOR THE CLASSIFICATION OF PRINCIPAL NETWORK ENGINEER.

   RESOLUTION NO. 25-29,651
   Adopt A RESOLUTION OF THE COUNCIL OF THE CITY OF BURBANK APPROVING THE REVISION OF THE TITLE AND SPECIFICATION FOR THE CLASSIFICATION OF PARK, RECREATION, AND COMMUNITY SERVICES DIRECTOR TO PARKS AND RECREATION DIRECTOR.

   RESOLUTION NO. 25-29,652
   Adopt A RESOLUTION OF THE COUNCIL OF THE CITY OF BURBANK APPROVING THE REVISION OF THE TITLE AND SPECIFICATION FOR THE CLASSIFICATION OF ASSISTANT PARK, RECREATION, AND COMMUNITY SERVICES DIRECTOR TO ASSISTANT PARKS AND RECREATION DIRECTOR.

RESOLUTION NO. 25-29,653
Adopt A RESOLUTION OF THE COUNCIL OF THE CITY OF BURBANK APPROVING THE REVISION OF THE TITLE AND SPECIFICATION FOR THE CLASSIFICATION OF SECRETARY TO THE CITY MANAGER TO SENIOR EXECUTIVE ASSISTANT TO THE CITY MANAGER.

RESOLUTION NO. 25-29,654
Adopt A RESOLUTION OF THE COUNCIL OF THE CITY OF BURBANK APPROVING THE CITYWIDE SALARY SCHEDULE.

9. Authorize the General Manager of Burbank Water and Power to Enter into an Electrical Services Agreement with the Burbank-Glendale-Pasadena Airport Authority

   Approve and authorize the General Manager of Burbank Water and Power to:

   1. Execute an Electrical Services Agreement with the Burbank-Glendale-Pasadena Airport Authority, subject to review and approval by the City Attorney's Office;
   2. Execute any other ancillary documents, including amendments, in form and substance satisfactory to the City Attorney's Office and up to an amount available within the City Council-approved Fiscal Year 2025-26 Budget; and
   3. Accept all Aid-in-Construction payments needed to provide electric service to the Hollywood Burbank Airport.

10. Authorize the Approval of a License Agreement with the Burbank-Glendale-Pasadena Airport Authority for Access to the Hollywood Burbank Airport for the Installation, Operation, and Maintenance of an 8-inch Potable Water Service

    Authorize the General Manager of Burbank Water and Power (BWP), or designee, to execute a License Agreement with the Burbank-Glendale-Pasadena Airport Authority that grants BWP access to the Hollywood Burbank Airport for the installation, operation, and maintenance of an 8-inch potable water service connection, and find the item exempt from the California Environmental Quality Act (CEQA).

11. Adoption of Burbank Water and Power's Cross-Connection Control Plan

    Adopt Burbank Water and Power's Cross-Connection Control Plan, and find the item exempt from the California Environmental Quality Act (CEQA).

Reports to Council:

1. Appointment to Fill a Vacancy on the Burbank Water and Power Board for an Unexpired Term

   Kimberley Clark, City Clark, presented the report and responded to City Council inquiries.

Public Comment:
Appearing to comment were: Ari Altman, Michael Graves, and Robert Nielson.

Council Action:
It was unanimously approved by Council consensus to appoint Ari Altman to the Burbank Water and Power Board to fill an unexpired term ending July 31, 2028.

2. Consideration of Board, Commission, and Committee Member Absences for Reporting Period 2024-2025

   Kimberley Clark, City Clark, presented the report and responded to City Council inquiries.

   Public Comment:
   Appearing to comment were: Linda Bessin, Maria Coronado, Philippe Eskandar, and David Donahue.

   Council Action:
   It was unanimously approved by Council consensus to excuse the absences of the following Board, Commission and Committee Members:

   - Philippe Eskandar (Burbank Water and Power Board)
   - Earle LeMasters (Burbank Water and Power Board)
   - Iveta Ovsepyan (Civil Service Board)
   - Arthur Solis (Heritage Commission)
   - Maria Coronado (Infrastructure Oversight Board)
   - Myeisha Peguero Gamiño (Park, Recreation and Community Services Board)
   - Limor Zimskind (Sustainable Burbank Commission)

Council Comments:
Council Members reported out on Council committee assignments and attendance at conferences, regional meetings, and community events.

Introduction of Additional Agenda Items:
Council Members did not request any additional agenda items.

Adjournment:
There being no further business to come before the City Council, the meeting was adjourned at 8:30 p.m. to Tuesday, October 14, 2025 for a Joint Meeting in the Council Chamber – 275 East Olive Avenue, Second Floor.

Kimberley Clark City Clerk	Nikki Perez Mayor

APPROVED DATE:

CITY COUNCIL REGULAR MEETING MINUTES
DARK MEETING
TUESDAY, OCTOBER 7, 2025

A Regular Meeting of the Council of the City of Burbank was not held on the above date.

Kimberley Clark City Clerk	Nikki Perez Mayor

APPROVED DATE:

PARKING AUTHORITY MINUTES
A JOINT MEETING WITH THE CITY COUNCIL
TUESDAY, SEPTEMBER 9, 2025

CALL TO ORDER:
A Joint Meeting of the Parking Authority and the City Council of the City of Burbank was held in the Council Chamber, 275 East Olive Avenue, on the above date. The meeting was called to order at 6:05 p.m. by Chair Perez.

MOMENT OF REFLECTION:
Chair Perez held a Moment of Reflection to begin the meeting with positive and collective support for our beloved community.

FLAG SALUTE:
The Pledge of Allegiance was led by Chair Perez.

ROLL CALL:
Present: Members Anthony, Mullins, and Rizzotti, Vice Chair Takahashi, and Chair Perez.
Absent: None.
Also Present: Executive Director Hess, City Attorney McDougall, and Secretary Clark.

Closed Session, Announcements, Council Presentations/Recognitions, City Manager Report, Reporting on Closed Session, Public Hearing, Council Comments, and Introduction of Additional Agenda Items were City Council items only and can be found in the City Council Meeting Minutes.

JOINT GENERAL PUBLIC COMMENT:
Appearing to comment were: David Donahue, Angela Towne, Ron Bax, Mark Scroggs, Mike Derian, Jamie Keyser, Stephanie Cyphers, Jim Lane, Diana Pulver, Mary O'Hare, Jackie Waltman, Steve Starleaf, Paul Darrigo, Elizabeth Bax, and Edward Parker (Bridging Community Resources).

Calling in to comment were: Allison Thomas, Gevik Sherverdian, Dimple Chirumamilla, Jo Pimienta, Liliana Martirosyan, Michelle Papazyan, and Hovik Keshishian.

COUNCIL, CITY MANAGER AND/OR CITY ATTORNEY COMMENT:
Members and Staff responded to Public Comment.

CONSENT CALENDAR:
It was moved by Member Mullins, seconded by Vice Chair Takahashi, to approve the Consent Calendar. For Item Nos. 1-6 and 8, the motion carried 5-0 with the following roll call vote: AYES: Anthony, Mullins, Rizzotti, Takahashi, and Perez. NOES: None. For Item No. 7, the motion carried 4-0-1 with the following roll call vote: AYES: Mullins, Rizzotti, Takahashi, and Perez. NOES: None. ABSTAIN: Anthony.

Consent Calendar Item Nos. 1-3 and 5-8 were City Council items only and can be found in the City Council minutes.

4. Parking Authority Minutes
   Approve the Parking Authority Minutes of the Joint Meeting of August 26, 2025.

REPORTS TO COUNCIL:

Reports to Council Item No. 3 was a City Council item only and can be found in the City Council minutes.

1. Approval of the 2025 City of Burbank Investment Policy (with All Agencies)

   Krystle Ang Palmer, City Treasurer, presented the PowerPoint presentation and responded to Parking Authority inquiries.

   Chair Perez left the dais at 8:05 p.m.

   Joint Public Comment:
   Appearing to comment was: None.

   Council Action:
   It was moved by Member Rizzotti, seconded by Member Anthony, to approve the 2025 Investment Policy as proposed. The motion carried 4-0 with the following roll call vote: AYES: Anthony, Mullins, Rizzotti, Takahashi. NOES: None. ABSENT: Perez.

2. Review of City Treasurer's Investment Portfolio Report for June 30, 2025 (with All Agencies)

   Krystle Ang Palmer, City Treasurer, presented the PowerPoint presentation and responded to Parking Authority inquiries.

   Member Anthony left the dais at 8:25 p.m.

   Joint Public Comment:
   Appearing to comment was: None.

   Council Action:
   It was approved by Authority Consensus to note and file.

   Chair Perez returned to the dais at 8:30 p.m.

   Member Anthony returned to the dais at 8:37 p.m.

ADJOURNMENT:

There being no further business to come before the Parking Authority, the meeting was adjourned at 9:07 p.m. to Tuesday, September 30, 2025, for a Joint Meeting in the Council Chamber – 275 East Olive Avenue, Second Floor.

Kimberley Clark Secretary	Nikki Perez Chair

APPROVED DATE:

STAFF REPORT

COMMUNITY DEVELOPMENT

DATE: October 14, 2025

TO: Justin Hess, City Manager

FROM: Patrick Prescott, Community Development Director
VIA: David Kriske, Assistant Community Development Director, Transportation
BY: Angelica Gonzales, Parking Analyst
Karen Pan, Transportation Services Manager

SUBJECT: Adoption of a Resolution Amending Fiscal Year 2025-26 Citywide Fee Schedule for the Valet Parking Meter Fee

RECOMMENDATION

Adopt A RESOLUTION OF THE COUNCIL OF THE CITY OF BURBANK AMENDING ARTICLE I, SECTION 14 OF THE FISCAL YEAR 2025-26 CITYWIDE FEE SCHEDULE FOR THE VALET PARKING METER FEE (Attachment 1).

BACKGROUND

At the August 26, 2025 City Council (Council) meeting, Council received a report on valet parking meter fees for paid parking meter zones (Attachment 2). These fees were established when Council approved a new parking meter zone for Downtown Burbank in November 2024. The valet parking meter fee applies to valet operators who wish to use any on-street curb spaces within a parking meter zone since the spaces would otherwise be available to the general public for pay. The valet operator is charged the hourly meter parking rate for each space it uses, for the duration of their valet operations. The adopted valet parking meter fee is currently the same as the public meter parking space fee of $2.00 per hour.

When Council approved the new parking meter zone, they directed staff to delay implementation of the valet parking meter fee and propose other options for crediting or discounting the fee. The parking meter zone was implemented in March 2025 and is operating today. On August 26, 2025, Council reviewed options for discounting the Valet

Parking Meter Fee and directed staff to modify the fee to 50% of the public parking meter fee per space and hour. In addition, Council directed staff to delay imposition of the fee on valet operators who began operating prior to March 7, 2025 (the date when parking meter fees were implemented in Downtown Burbank) for one year until March 6, 2026.

DISCUSSION

In November 2024, Council established a new parking meter zone for Downtown Burbank where drivers pay to park at street parking spaces. Approval included amending the FY 2024-25 Citywide Fee Schedule that would apply to valet operators who wish to use any on-street curb spaces within the parking meter zone. Based on Council's direction in August 2025, this staff report is to amend the Valet Parking Meter fee in the current FY 2025-26 Citywide Fee Schedule.

The proposed language in the FY 2025-26 Citywide Fee Schedule Article 1, § 14.D.5 states that the valet parking meter fee (referenced as "Valet Parking Spaces in Parking Meter Zones") will equal 50% of the top hourly parking rate charged in the parking meter zone. The fee would apply hourly for each metered curb street parking space for the duration of valet operation during parking meter hours. It is not uncommon for a parking meter zone to have different hourly parking rates based on street location. For example, on San Fernando Boulevard it costs $3.00 per hour to park while on Palm Avenue it costs $2.00 per hour, in the same parking meter zone. In this instance, the valet operator would be paying $1.50 per hour (50% of $3.00 per hour) for each parking space and the fee would only apply during the established valet hours. Those spaces would be reserved for the valet operator's exclusive use for the valet operator hours by using signage.

Additionally, the proposed language includes a footnote explaining that any businesses with a permanent valet parking operation that began prior to March 7, 2025, will receive a one-year grace period waiving the fee until March 6, 2026. Beginning March 7, 2026, all valet parking operators will be charged the fee. The one-year grace period and discounted rate are intended to support businesses and provide them with adequate time to adapt to the transition.

ENVIRONMENTAL REVIEW

This staff report has no potential for resulting in a direct or reasonably foreseeable indirect physical change to the environment and as such, falls outside the definition of a "project" under the California Environmental Quality Act (CEQA) and is therefore not subject to CEQA pursuant to CEQA Guidelines § 15378. Staff recommendation would simply implement a modified fee previously approved in November 2024, and implementing the modified fee does not affect the overall management of the existing use of parking and roadway network infrastructure.

FISCAL IMPACT

Modifying the valet parking meter fee will have a fiscal impact to the Parking Authority Fund 310. The revenue from the parking meter zone fees in Downtown Burbank are intended to be reinvested back into Downtown Burbank to be used to offset the operations, maintenance, active transportation amenities, and management of Downtown Burbank's public parking lots and structures.

There is currently one valet parking operator in Downtown Burbank, and their current four-space valet zone will cost $13,104 per year in lost parking revenue to Parking Authority Fund 310. Additional businesses that wish to operate valet parking in Downtown Burbank and occupy curb street parking spaces would continue to reduce revenue to the Parking Authority Fund 310. If the cost to manage the Downtown Burbank parking management operations exceeds revenues, other funding sources like the General Fund would need to subsidize the difference.

CONCLUSION

Staff recommends Council adopt the Resolution amending Article I, § 14 of the FY 2025-26 Citywide Fee Schedule to modify the valet parking meter fee and provide a one-year grace period to existing valet operators in the parking meter zone. These changes would support businesses in Downtown Burbank and provide a discounted rate for their valet parking programs.

ATTACHMENTS

Attachment 1 – Proposed Fee Resolution
Attachment 2 – August 26, 2025, City Council Staff Report

RESOLUTION NO. _____

A RESOLUTION OF THE COUNCIL OF THE CITY OF BURBANK AMENDING ARTICLE I, SECTION 14 OF THE FISCAL YEAR 2025-26 CITYWIDE FEE SCHEDULE FOR THE VALET PARKING METER FEE

THE COUNCIL OF THE CITY OF BURBANK RESOLVES:

1. Article I (MISCELLANEOUS), Section 14 (PARKING FEES), Subsection D (VALET OPERATOR) of the Fiscal Year 2025-26 Adopted Citywide Fee Schedule is amended as shown on Exhibit "A" attached hereto.

PASSED and ADOPTED this ____ day of October, 2025.

_____
Nikki Perez
Mayor

Approved as to Form:
Office of the City Attorney

Attest:

_____
Kimberley Clark, City Clerk

By: _____
Lisa Kurihara
Senior Assistant City Attorney

ATTACHMENT 1-1

STATE OF CALIFORNIA)
COUNTY OF LOS ANGELES) ss.
CITY OF BURBANK)

I, Kimberley Clark, City Clerk of the City of Burbank, do hereby certify that the foregoing Resolution was duly and regularly passed and adopted by a majority vote of the Council of the City of Burbank at its regular meeting held on the ____ day of _____ 2025, by the following vote:

AYES:

NOES:

ABSENT:

_____
Kimberley Clark, City Clerk

ATTACHMENT 1-2

EXHIBIT "A"

The following text shall be added to or deleted from Article I, Section 14 of the 2025-2026 Burbank Fee Schedule. **Underlined text** indicates addition, and ~~**strikethrough text**~~ indicates deletion.

SECTION 14. PARKING FEES

(Added on 5/14/19, Resolution 19-29,088)
(Moved from Article 2, Section 8 on 5/4/21, Resolution 21-29,233)
(Last Update 6/3/25, Resolution 25-29,616)

Description	Amount	Unit/Time
D. Valet Operator		
(1) New Application	$346.00	Each
(2) Renewal Application	$270.00	Each Per Year
(3) Temporary Application (less than 7 days)	$346.00	Each
(4) Valet Operator Appeal	$270.00	Each
(5) Valet Parking Spaces in Parking Meter Zones*	50% of the top hourly rate charged in the Parking Meter Zone. See Section (F)	Per Space Per Hour for Duration of Valet Operation During Parking Meter Hours
(6) Valet Zone Sign Installation Fee	See Section (E)	Each

* Any business with a permanent valet parking operation that began prior to March 7, 2025 (the date of implementation of the City's paid parking program), will receive a one-year grace period waiving the fee until March 6, 2026). Beginning on March 7, 2026, this fee will be charged to all valet parking operators.

STAFF REPORT

COMMUNITY DEVELOPMENT

DATE: August 26, 2025

TO: Justin Hess, City Manager

FROM: Patrick Prescott, Community Development Director
VIA: David Kriske, Asst. Community Development Director, Transportation
BY: Angelica Gonzales, Parking Analyst
Karen Pan, Transportation Services Manager

SUBJECT: Discussion of the Valet Parking Meter Fees for Paid Parking Meter Zones

---

RECOMMENDATION

Staff recommends that City Council direct staff to implement the Valet Parking Meter Fee as approved in November 2024.

BACKGROUND

On November 26, 2024, the City Council (Council) adopted an Ordinance to establish a new parking meter zone for Downtown Burbank (Ordinance) where drivers pay to park at street parking spaces along San Fernando Boulevard between Magnolia Boulevard and Angeleno Avenue, as well as the side streets on either side of San Fernando between First Street and Third Street. The hourly parking fee is set to ensure that drivers always have at least one or two parking spaces available on each block at any time, making it easier for visitors to find a parking spot. Council also approved a new fee to park at curb spaces in the parking meter zone, which can be adjusted by staff, within broad limits, a few times a year to ensure that drivers always have one or two spaces available to park. The current parking fee is $2.00 per hour and is required between 8:00 AM and midnight each day.

The City offers a valet parking permit program that allows private valet operators to reserve on-street parking spaces to collect and deliver cars from patrons of adjacent businesses. The permit requires valet operators to identify the spaces to be used, provide a valet operation map, locate appropriate off-street parking to store customer cars, and provide appropriate insurance to cover unexpected events. The City charges a one-time

permit fee to process the application and allows the valet operator to use the public curb spaces for free. Permanent valets are charged a nominal annual fee.

Approval of the Ordinance included a Valet Parking Meter fee that would apply to valet operators who wish to use any on-street curb spaces within the parking meter zone. This is because in a parking meter zone, valet operators are using public spaces that the general public pay to use through the parking meter fee. The Valet Parking Meter fee is the same as the public fee of $2.00 per hour. The valet operator is charged the hourly parking rate for each space it uses, for the duration of their valet operations. For instance, if the public is paying $2.00 per hour to park their vehicle and a valet operator establishes a two-space valet zone for six hours per evening, it would pay $24 per day to use the paid spaces. These spaces are reserved for the valet operator's exclusive use for the valet operator hours using signage.

During the November 19, 2024, City Council meeting introducing the Ordinance, the restaurant owner at 269 E Palm Avenue submitted a public comment expressing that valet operators in the Downtown parking meter zone should not be required to pay for parking fees. This business owner has operated a four-space valet zone, operating seven hours per day Tuesday through Thursday and 14 hours per day Friday through Sunday since October 2024. In response to the public comment, Council approved the parking meter zone and the valet parking meter fee but directed staff to come up with options for crediting or discounting the fee.

In March 2025, staff implemented the parking meter zone for Downtown Burbank, but it delayed charging the Valet Parking Meter fee to the entire parking meter zone while responding to Council's request. This staff report provides information and options for addressing valet operators' use of on-street paid parking spaces in Downtown Burbank. Staff has informed the current valet operator about the upcoming discussion and Council meeting date.

DISCUSSION

There are currently two permanent valet operations in the City, with one located in the Downtown Burbank parking meter zone (at 269 E Palm Avenue) and the other located at 3500 W Olive Avenue, which is not in a parking meter zone. To address the issue of accommodating valet operators in a parking meter zone where the City charges a fee to the public to use parking spaces, staff has identified three options for Council consideration:

> Option A – Implement Valet Parking Meter Fee as Approved in November 2024
> Option A would implement the fee as approved by Council when the parking meter zone was established. Valet operators would continue to be allowed to exclusively utilize curb parking spaces for valet collection and delivery to customers but would pay a fee equal to the hourly rate charged to the public, multiplied by the number of spaces used for the valet zone and the number of hours the zone is in operation.

Example 1 shown below shows how much the quarterly fee would be for a business that would like to use two parking spaces in the evenings for a valet zone:

Example 1. Valet Parking Meter Fee Calculation

Curbside Valet Spaces Requested:	2
Hourly paid parking charge:	$2.00
Valet Hours of Operation per day:	6 (6PM-12AM Thurs. thru Sun.)
Number of Days per Quarter in Operation:	52
Quarterly Valet Curb Spaces Fee	$1,248

Staff found that nearby cities charge similar fees. Table 1 shows the fees Glendale, Los Angeles, and Pasadena charge businesses seeking to provide valet services in a parking meter zone. None of these neighboring cities offer a credit or discount to businesses, although Glendale caps the rate at $3.00 per hour, and Los Angeles charges the average of the actual hourly revenue collected at parking spaces in the applicable zone.

Table 1. Neighboring Cities' Parking Fees and Credits

City	Parking Meter Cover Fee	Credit Offered
Burbank	100% per hour per parking space	None.
Glendale	100% per hour per parking space.	None. Hourly fee is capped at $3.00 per hour.
Los Angeles	Hourly charge per parking space, where hourly charge is the average hourly fee collected by parking spaces in the specific neighborhood or district. Example: • Neighbor A: $5 per hour per parking space • Neighbor B: $3 per hour per parking space • Valet Operator's Fee: $4 per hour per parking space	None
Pasadena	100% per hour per parking space	None.

Staff recommends Option A, which is to implement and manage the paid parking operations based on the existing policies and fees that were adopted by Council in November 2024, and not to offer the spaces for free (via fee removal or fee credit). The purpose of establishing the parking meter zone for Downtown Burbank is for the Parking Authority to manage parking through price, so that customers

and visitors to Downtown always have a convenient parking space available, along with ensuring parking turnover and reducing traffic congestion. Parking fees collected are important to offset the costs to manage the paid parking infrastructure as well as reinvest back into Downtown's parking assets. Reducing or waiving the valet parking fee is contrary to this goal, as it allows some users to receive City resources for free while others must pay and reduces resources available to maintain overall parking assets in Downtown. The clear goals and revenue transparency approved by Council helps build trust and support for the City's parking management operations Downtown and potentially in other neighborhoods.

Option B – Reduce the Valet Parking Meter Fee

Option B would reduce the valet parking meter fee by 50% and allow valet operators using spaces in parking meter zones to use those curb spaces at a reduced price compared to members of the public. When applied to Example 1, the valet operators would pay $1.00 per hour instead of $2.00 per hour for each parking space. Option B creates a discount for businesses but results in lost revenue for the parking meter zone that could otherwise be used for parking management operations and active transportation amenities and improvements in Downtown Burbank. For these reasons, Option B is not recommended.

Option C – Remove Valet Parking Meter Fee and Implement Valet Space Cap

Option C would remove the valet parking meter fee from the City's fee resolution and would allow valet operators using spaces in parking meter zones to use those curb spaces for free. To minimize impacts to the remaining paid parking spaces in Downtown, staff recommends this option include a cap so that no more than 5% of the paid parking spaces may be used for valets, on a first-come-first serve basis. For Downtown, this cap would be seven spaces. Additionally, staff recommends no valet operations be allowed on San Fernando Boulevard in Downtown. Option C would remove all financial impacts to existing and future valet operators in Downtown, but would result in more significant loss of revenue (compared to Option B) meant to support parking management operations and active transportation amenities. Further, a valet space cap is proposed under Option C because giving away too many parking spaces to valet operators would result in fewer spaces available to the public, thereby potentially raising the price paid by members of the public to park at the remaining spaces (above what they would otherwise pay). This is based on Council's policy to set curb space fees to ensure that a few spaces are always available. For these reasons, Option C is not recommended.

Since the implementation of the parking management program in March 2025, the City has received one public comment about valet parking in Downtown Burbank. The person wrote that the City should not have valet services in Downtown Burbank.

ENVIRONMENTAL REVIEW

This staff report has no potential for resulting in a direct or reasonably foreseeable indirect physical change to the environment and as such, falls outside the definition of a "project" under the California Environmental Quality Act (CEQA) and is therefore not subject to CEQA pursuant to CEQA Guidelines § 15378. The staff recommendation would simply implement the fee previously approved in November 2024, and implementing the other options does not affect the overall management of the existing use of parking and roadway network infrastructure.

FISCAL IMPACT

All parking fees are deposited into the Parking Authority Fund 310 to pay for parking management services provided by the Parking Authority. The revenue from the parking meter zone fees in Downtown Burbank are reinvested back into Downtown Burbank to be used to offset the operations, maintenance, active transportation amenities, and management of Downtown Burbank's public parking lots and structures.

Implementing Option A would have no fiscal impact. Implementing Options B or C will reduce the revenue received by the Parking Authority Fund, depending on the number and hours of public parking spaces reserved for valet operators. The current four-space valet zone operating in Downtown Burbank is costing up to $26,208 per year in lost parking revenue. With only about 145 spaces in the Downtown parking meter zone, further reducing revenue from a small parking meter zone is concerning as it may impact the ability for these fees to cover the cost to manage the zone. If the cost to manage the Downtown Burbank parking management operations exceeds revenues, other funding sources like the General Fund would need to subsidize the difference. Further, additional zones could create additional fiscal impact. The parking spaces on Palm Avenue have been shown to be heavily used since the parking management program has been implemented, suggesting that the lost revenue from the existing valet zone is likely similar to this maximum amount.

CONCLUSION

The recent establishment of the parking meter zone in Downtown Burbank is an essential tool to enhance convenience of parking for residents and visitors by making one to two parking spaces available per block at all times. Staff recommends Council implement Option A to continue to apply existing parking fees consistently to the public and businesses who wish to occupy street parking spaces in Downtown Burbank. This is consistent with Council's Parking Management Principles of dedicating all parking fees towards supporting parking and transportation services and infrastructure in Downtown Burbank.

ATTACHMENT

None.

STAFF REPORT

WATER AND POWER

DATE: October 14, 2025

TO: Justin Hess, City Manager

FROM: Mandip Kaur Samra, General Manager, Burbank Water and Power
VIA: Erik Olsen, Acting Assistant General Manager, Power Supply
BY: Frank Messineo, Power Production Manager

SUBJECT: Adoption of Resolutions Ratifying and Approving Grant Applications for the Magnolia Power Project with the California Energy Commission for the Bulk Grid Asset Enhancements for the Grid Reliability Program, and Authorizing the BWP General Manager, as the City Manager's Designee, to Negotiate and Execute All Related Agreements and Forms

---

RECOMMENDATION

1. Adopt A RESOLUTION OF THE COUNCIL OF THE CITY OF BURBANK RATIFYING AND APPROVING GRANT APPLICATIONS FOR THE BULK GRID ASSET ENHANCEMENTS FOR GRID RELIABILITY PROGRAM (ADVANCED GAS PATH RESILIENCY UPGRADE) FOR MAGNOLIA POWER PLANT AT BURBANK WATER AND POWER (BWP), AND AUTHORIZING AND DIRECTING THE BWP GENERAL MANAGER, AS THE CITY MANAGER'S DESIGNEE, TO NEGOTIATE, EXECUTE, AND IMPLEMENT ALL REQUIRED AND RELATED AGREEMENTS AND FORMS WITH THE CALIFORNIA ENERGY COMMISSION, THE SOUTHERN CALIFORNIA PUBLIC POWER AUTHORITY, AND OTHER SUBCONTRACTORS AND VENDORS, SUCH AUTHORITY SUBJECT TO APPROVAL BY THE SOUTHERN CALIFORNIA PUBLIC POWER AUTHORITY OF SUCH PROJECT (Attachment 1); and

2. Adopt A RESOLUTION OF THE COUNCIL OF THE CITY OF BURBANK RATIFYING AND APPROVING GRANT APPLICATIONS FOR THE BULK GRID ASSET ENHANCEMENTS FOR GRID RELIABILITY PROGRAM (ADVANCED COMPRESSOR RESILIENCY UPGRADE) FOR MAGNOLIA POWER PLANT AT BURBANK WATER AND POWER (BWP), AND AUTHORIZING AND DIRECTING THE BWP GENERAL MANAGER, AS THE CITY MANAGER'S DESIGNEE, TO

NEGOTIATE, EXECUTE, AND IMPLEMENT ALL REQUIRED AND RELATED AGREEMENTS AND FORMS WITH THE CALIFORNIA ENERGY COMMISSION, THE SOUTHERN CALIFORNIA PUBLIC POWER AUTHORITY, AND OTHER SUBCONTRACTORS AND VENDORS, SUCH AUTHORITY SUBJECT TO APPROVAL BY THE SOUTHERN CALIFORNIA PUBLIC POWER AUTHORITY OF SUCH PROJECT (Attachment 2).

BACKGROUND

Magnolia Power Project (MPP) is a Southern California Public Power Authority (SCPPA) project that went into commercial operation in 2005. SCPPA is a Joint Powers Authority, created in 1980, for the purpose of providing joint planning, financing, construction, and operation of transmission and generation projects. Comprised of eleven municipal utilities and one irrigation district, SCPPA's members serve more than 5 million Californians (2 million customers) across a service area of 9,000 square miles. SCPPA members supply 16% of California's power. SCPPA participants included in the MPP are Anaheim, Burbank, Cerritos, Colton, Glendale, and Pasadena. In addition to being a project participant, Burbank is also the operating agent responsible for operating and maintaining MPP for SCPPA.

After several summers with statewide energy shortages and governmental requests to evaluate opportunities to make generation capacity improvements, Magnolia Power Project (MPP) participants, which includes representatives from the six cities participating in the project, requested that BWP, as the MPP operating agent, evaluate the potential to improve the generation capacity of MPP. In July 2022, the MPP Operating Committee (a group of project participants who monitor and address operational matters) authorized an uprate study with General Electric (GE) to further evaluate this.

In early 2024, the California Energy Commission (CEC) released a new Grant Funding Opportunity (GFO) through the Distributed Electricity Backup Assets (DEBA) Program, entitled "Bulk Grid Asset Enhancements for Grid Reliability" (GFO-23-401) (Attachment 3). This GFO makes available $150 million to support the purchase and installation of efficiency upgrades and capacity additions to existing bulk grid power generators in California. Projects receiving funding through this solicitation are intended to support grid reliability during extreme events. The due date for GFO-23-401 applications was February 20, 2024 and BWP submitted two grant applications for consideration.

On April 22, 2024, BWP received notice from the CEC that the Notice of Proposed Award for GFO-23-401 includes an award of $12,755,466 for the MPP: Advanced Gas Path Resiliency Upgrade grant application and $23,293,654 for the MPP: Advanced Compressor Resiliency Upgrade grant application. A California Environmental Quality Act (CEQA) assessment is required, and the CEC is the lead agency in this case. Upon completion of the CEQA assessment, grant agreements with the CEC can be entered.

On May 16, 2024, the MPP Coordinating Committee (a group of authorized representatives from each participant city designated to make decisions for the project), approved a Resolution (Attachment 1) expressing the committee's interest in pursuing the development of the MPP: Advanced Gas Path Resiliency Upgrade project and the MPP: Advanced Compressor Resiliency Upgrade project (MPP Projects), subject to receipt of a DEBA grant award and environmental clearance for the proposed projects including under CEQA (Attachment 4). Combined, the MPP Projects would result in approximately $45.3 million as SCPPA's responsibility to pay. The MPP Coordinating Committee discussed a proposal to fund SCPPA's cost of such proposed projects by utilizing MPP reserves beginning in Fiscal Year (FY) 2025-26. Should the grants be awarded, the soonest implementation could occur in the first quarter of 2027. This is because these projects require manufactured components and the current expected schedule to manufacture these items is over 12 months. There is also approximately a 90-day period required to install these items once they arrive onsite in 2027.

DISCUSSION

GFO-23-401 and the proposed MPP Projects provide beneficial opportunities for MPP participants as they would provide needed in-basin generation capacity to help with electric demand peaks and emergencies at the lowest available cost. These proposed upgrades combined are approximately $81.3 million for a generation capacity increase of approximately 48 megawatts. In this case, the CEC would cover approximately $36 million of the cost and SCPPA would cover the remainder ($45.3 million). These upgrades also provide a maintenance cost avoidance of approximately $14.7 million. With taxes and consideration of the maintenance cost avoidance, the upgrades would be cost less than $665 per kilowatt of generation capacity, which is not currently available anywhere else.

Considering that MPP has a very competitive fuel efficiency rate and the best available emissions control technology, it is an optimal facility to implement such upgrades.

The CEC grant agreements contain certain standard terms, including, but not limited to, cost compliance provisions, prevailing wages, contracting and procurement provisions, retention, recordkeeping, auditing and indemnification. In addition, the CEC may terminate for breach of the CEC grant agreements and may terminate at its convenience (in which case, SCPPA would be responsible for all remaining amounts). Under the CEC grant agreements, BWP, as operating agent, would be responsible for administering to GE contract on SCPPA's behalf. In addition, Burbank and SCPPA would need to separately execute "flow down" agreements whereby certain provisions of the CEC grant agreements would need to be extended between Burbank and SCPPA.

GFO-23-401 requires that the upgrades be operational by July 1, 2027. The primary cost of the upgrade projects would come from an amendment and an extra work agreement between GE and SCPPA. Due to the long lead time items, SCPPA must issue a notice to proceed to GE by December 19, 2025. In addition, SCPPA must provide payment deposits to GE by December 29, 2025. Lastly, CEC grant agreements must be executed by BWP prior to any SCPPA payments to GE. As a result, there is a tight schedule to complete the CEQA. If environmentally cleared, there would be limited time for BWP to execute grant agreements and for SCPPA to provide GE a notice to proceed.

SCPPA will be seeking approval of the MPP Projects, with the applicable flow-down agreements, on October 16, 2025. The approvals granted under the resolutions for Council's consideration will be subject to SCPPA's approval of such projects and the applicable flow-down agreements.

ENVIROMENTAL REVIEW

To implement the proposed upgrade projects, SCPPA submitted to the CEC a Petition to Amend (PTA) the license and conditions of certification for the MPP. As part of the CEC's review of the PTA, CEC staff is preparing a staff assessment to evaluate the environmental impacts and consistency with laws, ordinances, regulations and standards. This post-certification evaluation prepared pursuant to § 1769 of Title 20 of the California Code of Regulations is part of the CEC's certified regulatory program and, if adopted, can also serve as a lead agency environmental analysis for purposes of the California Environmental Quality Act (CEQA). Therefore, the CEC will be able to use the same environmental analysis to support its CEQA determination for awarding the DEBA funds for the proposed upgrade projects. CEC must complete the § 1769 assessment before the CEC can approve and execute the CEC grant agreements.

The proposed upgrade projects would be limited to the installation of internal components and the air quality/public health operational impacts associated with a slight increased air emissions, but no ground disturbance or excavation is expected and no other physical changes are planned, and as a result, it is expected that the impacts associated with the PTA would be less than significant.

The proposed upgrade projects do not alter the nameplate capacity of MPP, an existing facility, and involves minor physical alteration of the existing physical structure and facilities of MPP, involving negligible or no expansion of use of an existing facility of a publicly owned utility used to provide electric power, and is therefore categorically exempt under § 15301 of the California Code of Regulations, Title 14, Division 6, Chapter 3.

The proposed upgrade projects involve the replacement or reconstruction of facilities within the existing physical structure and facilities of MPP, involving replacement or

reconstruction of components of existing utility systems and/or facilities involving no expansion of nameplate capacity, and is therefore categorically exempt under § 15302 of the California Code of Regulations, Title 14, Division 6, Chapter 3.

FISCAL IMPACT

As the operating agent, the City of Burbank would be reimbursed for its costs associated with implementing the CEC grant agreements. Additionally, SCPPA would need to fund a minimum of 55% of the costs of the Advanced Gas Path Resiliency Upgrade and the MPP Advanced Compressor Resiliency. If there is a default or termination of the CEC grant agreements, SCPPA would be responsible for 100% of the costs. As a participant, Burbank would be responsible for its pro rata portion of SCPPA's obligations for each project. Burbank's obligation share is approximately $9.5 million with grants and approximately $20.7 million under an unexpected loss of grants scenario.

CONCLUSION

Adopting the resolutions ratifying and approving grant applications with the CEC for bulk grid asset enhancements under the grid reliability program, and authorizing the BWP General Manager, as the City Manager's designee, to negotiate and execute all related agreements and forms, is in the best interest of the MPP participants. If environmentally cleared, this will allow BWP to complete upgrades and be operational by July 1, 2027, as required by the CEC grants. Implementing the upgrades will increase MPP capacity and significantly improve electric system reliability for Burbank and the entire State of California during the peak seasons and emergencies. By taking the recommended action, the City Council would avoid potential energy shortages and customer outages within Burbank as well as reduce risks for the state. In addition, reduce exposure to extremely high peak season energy purchase costs in cases where energy is needed and available for purchase.

ATTACHMENTS

Attachment 1 – Resolution (Advanced Gas Path Resiliency Upgrade)
Attachment 2 – Resolution (Advanced Compressor Resiliency Upgrade)
Attachment 3 – CEC Standard Terms and Conditions
Attachment 4 – Resolution No. 2024-001

ATTACHMENT 1

RESOLUTION NO. _____

A RESOLUTION OF THE COUNCIL OF THE CITY OF BURBANK RATIFYING AND APPROVING GRANT APPLICATIONS FOR THE BULK GRID ASSET ENHANCEMENTS FOR GRID RELIABILITY PROGRAM (ADVANCED GAS PATH RESILIENCY UPGRADE) FOR MAGNOLIA POWER PLANT AT BURBANK WATER AND POWER (BWP), AND AUTHORIZING AND DIRECTING THE BWP GENERAL MANAGER, AS THE CITY MANAGER'S DESIGNEE, TO NEGOTIATE, EXECUTE, AND IMPLEMENT ALL REQUIRED AND RELATED AGREEMENTS AND FORMS WITH THE CALIFORNIA ENERGY COMMISSION, THE SOUTHERN CALIFORNIA PUBLIC POWER AUTHORITY, AND OTHER SUBCONTRACTORS AND VENDORS, SUCH AUTHORITY SUBJECT TO APPROVAL BY THE SOUTHERN CALIFORNIA PUBLIC POWER AUTHORITY OF SUCH PROJECT

THE COUNCIL OF THE CITY OF BURBANK FINDS:

A. The Magnolia Power Project (MPP) is a two-stage combustion turbine generator and heat steam recovery generator facility that is owned by the Southern California Public Power Authority (SCPPA, or Owner) and operated by Burbank Water and Power (BWP, or Operator), as operating agent for SCPPA on behalf of its participants: Anaheim, Burbank, Cerritos, Colton, Glendale and Pasadena.

B. The California Energy Commission (CEC) has made $150 million available to support the purchase and installation of efficiency upgrades and capacity additions to existing bulk grid power generators under the Distributed Electricity Backup Assets (DEBA) Program, entitled "Bulk Grid Asset Enhancements for Grid Reliability" (GFO-23-401).

C. The City of Burbank (City) and BWP submitted two applications to the CEC's GFO-23-401 for two grant funding opportunities under the Distributed Electricity Backup Assets program (DEBA) for proposed upgrades to the MPP, including an application for deployment of: a new advanced gas path resiliency upgrade onto MPP's existing gas turbine system (Advanced Gas Path Resiliency Upgrade, or Proposed Project).

D. On April 22, 2024, BWP received notice from the CEC staff that the Notice of Proposed Award for GFO-23-401 includes proposed funding for $12,755,466 for the Advanced Gas Path Resiliency Upgrade grant application.

E. To implement the Proposed Project, SCPPA submitted to the CEC a Petition to Amend (PTA) the license and conditions of certification for the MPP. As part

of the CEC's review of the PTA, CEC staff is preparing a staff assessment to evaluate the environmental impacts and consistency with laws, ordinances, regulations and standards. This post-certification evaluation prepared pursuant to Section 1769 of Title 20 of the California Code of Regulations is part of the CEC's certified regulatory program and, if adopted, can also serve as a lead agency environmental analysis for purposes of the California Environmental Quality Act (CEQA). Therefore, the CEC will be able to use the same environmental analysis to support its CEQA determination for the awarding the DEBA funds for the Proposed Project. Likewise, BWP and SCPPA may elect to rely on the forthcoming assessment to support any respective determinations under CEQA as Responsible Agencies. For the CEC, staff must complete the Section 1769 assessment before the CEC can approve and execute the grant.

F. In order to implement the Proposed Project, SCPPA must obtain approval of amended conditions of compliance from the South Coast Air Quality Management District (SCAQMD) and the amended conditions of certification from the CEC.

G. BWP, as operating agent for MPP, is expecting to receive formal authorization and approval from SCPPA as the Owner of MPP, to implement the Proposed Project subject to the amended conditions of compliance from SCAQMD, the amended conditions of certification from the CEC, and all terms and conditions required by the CEC for the DEBA funding ("SCPPA Approval"), which is anticipated to occur on October 16, 2025.

H. As a condition of the funding award with the CEC, the BWP will enter into a subaward flow-down agreement ("Flow-Down Agreement") with SCPPA in order to flow down terms specified in the funding award to carry out certain tasks in the scope of work and SCPPA will be the entity making payments under the PSSA and EWA (each, as defined below).

I. BWP, as operating agent for MPP, has represented SCPPA in connection with a Parts and Special Services Agreement (PSSA) with General Electric Vernova, LLC, as successor the General Electric International, Inc. (GE) and SCPPA, that was signed on September 29, 2005; BWP has recently negotiated an Amendment Four to the PSSA and a related Extra Work Agreement (EWA) that includes an option to implement capacity upgrades including the Proposed Project supported by the DEBA funding.

J. It is in the best interest of the City, on behalf of BWP, to ratify and approve the Advanced Gas Path Resiliency Upgrade grant application, to accept the grant award, and to authorize and direct the BWP General Manager as the City Manager's designee, to execute, negotiate, and implement all required and related agreements and forms with the CEC, SCPPA, and other subcontractors and vendors, and to implement and carry out the Proposed Project subject to the amended conditions of compliance from SCAQMD, the amended conditions of certification from the CEC, and all terms and conditions required by the CEC for the DEBA funding.

K. The Proposed Project would be limited to the installation of internal components and the air quality/public health operational impacts associated with a slight increased air emissions, but no ground disturbance or excavation is expected and no other physical changes are planned, and as a result, it is expected that the impacts associated with the PTA would be less than significant.

L. The Proposed Project does not alter the nameplate capacity of MPP, an existing facility, and involves minor physical alteration of the existing physical structure and facilities of MPP, involving negligible or no expansion of use of an existing facility of a publicly owned utility used to provide electric power, and is therefore categorically exempt under Section 15301 of the California Code of Regulations, Title 14, Division 6, Chapter 3.

M. The Proposed Project involves the replacement or reconstruction of facilities within the existing physical structure and facilities of MPP, involving replacement or reconstruction of components of existing utility systems and/or facilities involving no expansion of nameplate capacity, and is therefore categorically exempt under Section 15302 of the California Code of Regulations, Title 14, Division 6, Chapter 3.

THE COUNCIL OF THE CITY OF BURBANK RESOLVES:

1. The City ratifies, approves and accepts the grant applications and the associated Notice of Proposed Award for GFO-23-401 that includes $12,755,466 for Advanced Gas Path Resiliency Upgrade grant application for MPP by BWP, as operating agent of MPP on behalf of SCPPA.

2. That the General Manager of BWP, as designee of the City of Burbank City Manager, is hereby authorized and directed to execute, negotiate, and implement all required and related agreements and forms with the CEC, SCPPA, and other subcontractors and vendors, and to implement the Proposed Project subject to the amended conditions of compliance from SCAQMD, the amended conditions of certification from the CEC, and all terms and conditions required by the CEC for the DEBA funding, including the SCPPA Flow-Down Agreement, subject to review and approval of the City Attorney's Office.

3. The General Manager of BWP, as designee of the City of Burbank City Manager, is hereby authorized and directed to submit any required documents, invoices, and reports required to obtain grant funding and any other documents, invoices and reports required under any agreements with the CEC.

4. The authority granted in this Resolution is subject to obtaining the SCPPA Approval.

5. The City finds that the Proposed Project has less than significant effects, and involves existing facilities and reconstruction and replacement of components within such existing facilities, and therefore is categorically exempt under Sections 15301 and 15302 of the California Code of Regulations, Title 14, Division 6, Chapter 3.

PASSED and ADOPTED this ____ day of _____, 2025.

_____
Nikki Perez
Mayor

Approved as to Form:
Office of the City Attorney

Attest:

_____
Kimberley Clark, City Clerk

By: _____
Christopher Chwang
Senior Assistant City Attorney

STATE OF CALIFORNIA)
COUNTY OF LOS ANGELES) ss.
CITY OF BURBANK)

I, Kimberley Clark, City Clerk of the City of Burbank, do hereby certify that the foregoing Resolution was duly and regularly passed and adopted by the Council of the City of Burbank at its regular meeting held on the ____day of _____, by the following vote:

AYES:

NOES:

ABSENT:

_____
Kimberley Clark, City Clerk

ATTACHMENT 2

RESOLUTION NO. _____

A RESOLUTION OF THE COUNCIL OF THE CITY OF BURBANK RATIFYING AND APPROVING GRANT APPLICATIONS FOR THE BULK GRID ASSET ENHANCEMENTS FOR GRID RELIABILITY PROGRAM (ADVANCED COMPRESSOR RESILIENCY UPGRADE) FOR MAGNOLIA POWER PLANT AT BURBANK WATER AND POWER (BWP), AND AUTHORIZING AND DIRECTING THE BWP GENERAL MANAGER, AS THE CITY MANAGER'S DESIGNEE, TO NEGOTIATE, EXECUTE, AND IMPLEMENT ALL REQUIRED AND RELATED AGREEMENTS AND FORMS WITH THE CALIFORNIA ENERGY COMMISSION, THE SOUTHERN CALIFORNIA PUBLIC POWER AUTHORITY, AND OTHER SUBCONTRACTORS AND VENDORS, SUCH AUTHORITY SUBJECT TO APPROVAL BY THE SOUTHERN CALIFORNIA PUBLIC POWER AUTHORITY OF SUCH PROJECT

THE COUNCIL OF THE CITY OF BURBANK FINDS:

A. The Magnolia Power Project (MPP) is a two-stage combustion turbine generator and heat steam recovery generator facility that is owned by the Southern California Public Power Authority (SCPPA, or Owner) and operated by Burbank Water and Power (BWP, or Operator), as operating agent for SCPPA on behalf of its participants: Anaheim, Burbank, Cerritos, Colton, Glendale and Pasadena.

B. The California Energy Commission (CEC) has made $150 million available to support the purchase and installation of efficiency upgrades and capacity additions to existing bulk grid power generators under the Distributed Electricity Backup Assets (DEBA) Program, entitled "Bulk Grid Asset Enhancements for Grid Reliability" (GFO-23-401).

C. The City of Burbank (City) and BWP submitted two applications to the CEC's GFO-23-401 for two grant funding opportunities under the Distributed Electricity Backup Assets program (DEBA) for proposed upgrades to the MPP, including an application for deployment of: a new advanced compressor onto MPP's existing gas turbine system (Advanced Compressor Resiliency Upgrade, or Proposed Project).

D. On April 22, 2024, BWP received notice from the CEC staff that the Notice of Proposed Award for GFO-23-401 includes proposed funding for $23,293,654 for the Advanced Compressor Resiliency Upgrade grant application.

E. To implement the Proposed Project, SCPPA submitted to the CEC a Petition to Amend (PTA) the license and conditions of certification for the MPP. As part

of the CEC's review of the PTA, CEC staff is preparing a staff assessment to evaluate the environmental impacts and consistency with laws, ordinances, regulations and standards. This post-certification evaluation prepared pursuant to Section 1769 of Title 20 of the California Code of Regulations is part of the CEC's certified regulatory program and, if adopted, can also serve as a lead agency environmental analysis for purposes of the California Environmental Quality Act (CEQA). Therefore, the CEC will be able to use the same environmental analysis to support its CEQA determination for the awarding the DEBA funds for the Proposed Project. Likewise, BWP and SCPPA may elect to rely on the forthcoming assessment to support any respective determinations under CEQA as Responsible Agencies. For the CEC, staff must complete the Section 1769 assessment before the CEC can approve and execute the grant.

F. In order to implement the Proposed Project, SCPPA must obtain approval of amended conditions of compliance from the South Coast Air Quality Management District (SCAQMD) and the amended conditions of certification from the CEC.

G. BWP, as operating agent for MPP, is expecting to receive authorization and approval from SCPPA as the Owner of MPP, to implement the Proposed Project subject to the amended conditions of compliance from SCAQMD, the amended conditions of certification from the CEC, and all terms and conditions required by the CEC for the DEBA funding ("SCPPA Approval"), which is anticipated to occur on October 16, 2025.

H. As a condition of the funding award with the CEC, the BWP will enter into a subaward flow-down agreement ("Flow-Down Agreement") with SCPPA in order to flow down terms specified in the funding award to carry out certain tasks in the scope of work and SCPPA will be the entity making payments under the PSSA and EWA (each, as defined below).

I. BWP, as operating agent for MPP, has represented SCPPA in connection with a Parts and Special Services Agreement (PSSA) with General Electric Vernova, LLC, as successor the General Electric International, Inc. (GE) and SCPPA, that was signed on September 29, 2005; BWP has recently negotiated an Amendment Four to the PSSA and a related Extra Work Agreement (EWA) that includes an option to implement capacity upgrades including the Proposed Project supported by the DEBA funding.

J. It is in the best interest of the City, on behalf of BWP, to ratify and approve the Advanced Compressor Resiliency Upgrade grant application, to accept the grant award, and to authorize and direct the BWP General Manager as the City Manager's designee, to execute, negotiate, and implement all required and related agreements and forms with the CEC, SCPPA, and other subcontractors and vendors, and to implement and carry out the Proposed Project subject to the amended conditions of compliance from SCAQMD, the amended conditions of certification from the CEC, and all terms and conditions required by the CEC for the DEBA funding

K. The Proposed Project would be limited to the installation of internal components and the air quality/public health operational impacts associated with a slight

increased air emissions, but no ground disturbance or excavation is expected and no other physical changes are planned, and as a result, it is expected that the impacts associated with the PTA would be less than significant.

L. The Proposed Project does not alter the nameplate capacity of MPP, an existing facility, and involves minor physical alteration of the existing physical structure and facilities of MPP, involving negligible or no expansion of use of an existing facility of a publicly owned utility used to provide electric power, and is therefore categorically exempt under Section 15301 of the California Code of Regulations, Title 14, Division 6, Chapter 3.

M. The Proposed Project involves the replacement or reconstruction of facilities within the existing physical structure and facilities of MPP, involving replacement or reconstruction of components of existing utility systems and/or facilities involving no expansion of nameplate capacity, and is therefore categorically exempt under Section 15302 of the California Code of Regulations, Title 14, Division 6, Chapter 3.

THE COUNCIL OF THE CITY OF BURBANK RESOLVES:

1. The City ratifies, approves and accepts the grant applications and the associated Notice of Proposed Award for GFO-23-401 that includes $23,293,654 for Advanced Compressor Resiliency Upgrade grant application for MPP by BWP, as operating agent of MPP on behalf of SCPPA.

2. That the General Manager of BWP, as designee of the City of Burbank City Manager, is hereby authorized and directed to execute, negotiate, and implement all required and related agreements and forms with the CEC, SCPPA, and other subcontractors and vendors, and to implement the Proposed Project subject to the amended conditions of compliance from SCAQMD, the amended conditions of certification from the CEC, and all terms and conditions required by the CEC for the DEBA funding, including the SCPPA Flow-Down Agreement, subject to review and approval of the City Attorney's Office.

3. The General Manager of BWP, as designee of the City of Burbank City Manager, is hereby authorized and directed to submit any required documents, invoices, and reports required to obtain grant funding and any other documents, invoices and reports required under any agreements with the CEC.

4. The authority granted in this Resolution is subject to obtaining the SCPPA Approval.

5. The City finds that the Proposed Project has less than significant effects, and involves existing facilities and reconstruction and replacement of components within such existing facilities, and therefore is categorically exempt under Sections 15301 and 15302 of the California Code of Regulations, Title 14, Division 6, Chapter 3.

PASSED and ADOPTED this ____ day of _____, 2025.

_____
Nikki Perez
Mayor

Approved as to Form:
Office of the City Attorney

Attest:

_____
Kimberley Clark, City Clerk

By: _____
Christopher Chwang
Senior Assistant City Attorney

STATE OF CALIFORNIA)
COUNTY OF LOS ANGELES) ss.
CITY OF BURBANK)

I, Kimberley Clark, City Clerk of the City of Burbank, do hereby certify that the foregoing Resolution was duly and regularly passed and adopted by the Council of the City of Burbank at its regular meeting held on the ____day of _____, by the following vote:

AYES:

NOES:

ABSENT:

_____
Kimberley Clark, City Clerk

EXHIBIT C

CEC STANDARD GRANT TERMS AND CONDITIONS

TABLE OF CONTENTS:

SECTION		PAGE NO.
1.	GRANT AGREEMENT	2
2.	DOCUMENTS INCORPORATED BY REFERENCE	2
3.	STANDARD OF PERFORMANCE	3
4.	DUE DILIGENCE	3
5.	PRODUCTS	3
6.	AMENDMENTS	5
7.	CONTRACTING AND PROCUREMENT PROCEDURES	8
8.	PAYMENT OF FUNDS	14
9.	TRAVEL AND PER DIEM	22
10.	PREVAILING WAGE	23
11.	RECORDKEEPING, COST ACCOUNTING, AND AUDITING	26
12.	WORKERS' COMPENSATION INSURANCE	28
13.	PERMITS AND CLEARANCES	28
14.	EQUIPMENT	28
15.	STOP WORK	28
16.	TERMINATION	29
17.	INDEMNIFICATION	30
18.	CONFIDENTIAL RECIPIENT INFORMATION	30
19.	PRE-EXISTING AND INDEPENDENTLY FUNDED INTELLECTUAL PROPERTY	31
20.	INTELLECTUAL PROPERTY	33
21.	ROYALTY PAYMENTS TO THE COMMISSION	36
23.	CERTIFICATIONS AND COMPLIANCE GENERAL PROVISIONS	39
24.	CALIFORNIA TAXPAYER ACCESS TO PUBLICLY FUNDED RESEARCH ACT	41
25.	RUSSIAN SANCTIONS	44
26.	COMMISSION REMEDIES FOR RECIPIENT'S NON-COMPLIANCE	46
27.	RECEIPT OF CONFIDENTIAL CEC OR THIRD-PARTY INFORMATION	
28.	DEFINITIONS	46

ATTACHMENT 1: CONFIDENTIAL PRODUCTS AND PROJECT-RELEVANT PRE-EXISTING AND INDEPENDENTLY FUNDED INTELLECTUAL PROPERTY

EXHIBIT C

TERMS AND CONDITIONS

1. GRANT AGREEMENT

This grant agreement (Agreement) between the California Energy Commission (Energy Commission, Commission, or CEC) and the grant Recipient includes: (1) the Agreement signature page **(form CEC-146)**; (2) the scope of work **(Exhibit A)**; (3) the budget **(Exhibit B)**; (4) these terms and conditions **(Exhibit C)**; (5) any special terms and conditions that address the unique circumstances of the funded project **(Exhibit D)**; (6) a contacts list **(Exhibit E)**; (7) all attachments; and (8) all documents incorporated by reference.

All reimbursable work and expenditure of funds (CEC-reimbursed and/or match share) must occur within the Agreement term specified on the CEC-146 form, except for Agreements funded by the Clean Transportation Program or Zero-emission Vehicle Infrastructure which have statutory authorization for early expenditure of Match Funds. The CEC cannot authorize any payments until all parties sign this Agreement.

2. DOCUMENTS INCORPORATED BY REFERENCE

The documents below are incorporated by reference into this Agreement. These terms and conditions (this Exhibit C and if included, Exhibit D) will govern in the event of a conflict with the documents below, with the exception of the documents in subsections (e) and (f) below. Where this Agreement or California laws and regulations are silent or do not apply, the CEC will use the federal cost principles and acquisition regulations listed below as guidance in determining whether reimbursement of claimed costs is allowable. Documents incorporated by reference include:

Solicitation Documents (if award is made through a competitive solicitation)

a. The funding solicitation for the project supported by this Agreement
b. The Recipient's proposal submitted in response to the solicitation

Federal Cost Principles *(applicable to state and local governments, Indian tribes, institutions of higher education, and nonprofit organizations)*

c. 2 Code of Federal Regulations (CFR) Part 200, Subpart E (Sections 200.400 et seq.)

Federal Acquisition Regulations *(applicable to commercial organizations)*

d. 48 CFR, Ch.1, Subchapter E, Part 31, Subpart 31.2: Contracts with Commercial Organizations (supplemented by 48 CFR, Ch. 9, Subchapter E, Part 931, Subpart 931.2 for Department of Energy grants)

Nondiscrimination

e. 2 California Code of Regulations, Section 11099 et seq.: Contractor Nondiscrimination and Compliance

General Laws

f. Any federal, state, or local laws or regulations applicable to the project that are not expressly listed in this Agreement

3. STANDARD OF PERFORMANCE

In performing work under the Agreement, the Recipient, its Subrecipients, and any lower tiered level of Sub-Subrecipients, and Vendors, and their employees are responsible for exercising the degree of skill and care required by customarily accepted good professional practices and procedures for the type of work performed.

4. DUE DILIGENCE

The Recipient must take timely actions that, taken collectively, move this project to completion. The Commission Agreement Manager (CAM) will periodically evaluate the project schedule for completion of Scope of Work tasks. If the CAM determines that: (1) the Recipient is not diligently completing the tasks in the Scope of Work; or (2) the time remaining in this Agreement is insufficient to complete all project tasks by the Agreement end date, the CAM may recommend that this Agreement be terminated, and the Commission may terminate this Agreement without prejudice to any of its other rights and remedies.

5. PRODUCTS

a. **"Products"** are any tangible item specified for delivery to the CEC in the Scope of Work, such as reports and summaries.

If the CAM determines that a product is substandard given its description and intended use as described in this Agreement, the CAM, without prejudice to any of the CEC's other rights and remedies, may refuse to authorize payment for the product and any subsequent products that rely on or are based upon the product under this Agreement.

b. Confidential Products

Please see Section 18 (Confidential Recipient Information) for instructions regarding confidential recipient information in products.

c. Rights in Products

The CEC owns all products identified in the Scope of Work, with the exception of products that fall within the definition of “intellectual property.” As between the CEC and the Recipient, the Recipient owns all intellectual property developed under this Agreement (please see the “Intellectual Property” section).

d. Failure to Submit Products

A Recipient’s failure to submit a product required in the Scope of Work may be considered material noncompliance with the Agreement terms. Without prejudice to any other rights and remedies, noncompliance may result in CEC actions such as the withholding of future payments or awards, or the suspension or termination of the Agreement.

e. Final Report and Payment

The Recipient may only submit a request for the final payment (including any retention) after the final report is completed, submitted to the CAM, and CEC management has verified satisfactory completion of work.

f. Legal Statements on Products

1) All documents that result from work funded by this Agreement and are released to the public must include the following statement to ensure no Commission endorsement of documents:

LEGAL NOTICE

This document was prepared as a result of work sponsored by the California Energy Commission. It does not necessarily represent the views of the Energy Commission, its employees, or the State of California. Neither the Commission, the State of California, nor the Commission’s employees, contractors, or subcontractors makes any warranty, express or implied, or assumes any legal liability for the information in this document; nor does any party represent that the use of this information will not infringe upon privately owned rights. This document has not been approved or disapproved by the Commission, nor has the Commission passed upon the accuracy of the information in this document.

2) The Recipient will apply copyright notices to all documents prepared for this Agreement that are released to the public (including reports, articles submitted for publication, and all reprints) using the following form or any other form that may be reasonably specified by the CEC.

"©[Year of first publication of product] [the Copyright Holder's name]. All Rights Reserved."

6. AMENDMENTS

a. Procedure for Requesting Changes

The Recipient must submit a written request to the CAM for any change to the Agreement. The request must include:

- A brief summary of the proposed change;
- A brief summary of the reason(s) for the change; and
- The revised section(s) of the Agreement, with changes made in underline/ strikethrough format.

b. Approval of Changes

Unless otherwise allowed in this Agreement, no amendment or variation of this Agreement shall be valid unless made in writing and signed by both of the parties except for the CEC's unilateral termination rights in Section 16 and Section 25 of these terms. No oral understanding or agreement is binding on any of the parties. Changes to the Agreement must be approved at a CEC business meeting or by the Executive Director (or his/her designee).

Upon Recipient's request, the CAM or Commission Agreement Officer will provide the Recipient with a document titled "Changes to Grants – Level of Approval and Notification Chart" commonly referred to as the "Changes Chart." This document explains the level of CEC approval required for a proposed change.

c. Personnel Changes

Except when replacing "key personnel," the Recipient, Subrecipients, and any lower-tiered level of Sub-Subrecipient, and Vendors can make changes to their respective personnel without written approval. Although changes to "key personnel" do require written approval, that approval can be requested and granted through an email communication or other form of written communication.

Recipients may be reimbursed for actual expenses incurred by new "key personnel" during the term of the Agreement, even if written approval comes after an individual begins work on the project. However, if the replacement is not approved, then the CEC will not reimburse for any expenses charged for the individual. Accordingly, Recipients are strongly encouraged to obtain advance written approval for "key personnel" or risk not being reimbursed for their work.

Recipient must keep the CAM informed of personnel changes through monthly calls and quarterly progress reports. In addition to any other rights and remedies available to the CEC, the CEC retains its authority to issue a Stop Work Order if it becomes clear that the personnel, key or otherwise, of the Recipient, a Subrecipient, any lower-tiered level of Sub-Subrecipient, or Vendor are unable to fulfill their responsibilities under the Agreement. In addition to all other rights and remedies, the CEC shall not pay (or may require Recipient to repay if the CEC has already paid) for personnel who are unnecessary to complete the scope of work or otherwise perform under the Agreement.

d. Budget Reallocations

No CEC approval is needed for a Recipient, Subrecipient, or any lower-tiered level of Sub-Subrecipient to move funds **within** each of the following Budget Categories listed in Exhibit B: Direct Labor, Fringe Benefits, Travel, Equipment, Materials and Miscellaneous, Subrecipients and Vendors, and Indirect Costs. However, please note per parts e. and h., directly below in this Section 6, any new Materials and Miscellaneous, Equipment, Subrecipient, Sub-Subrecipient or any lower-tiered level of Sub-Subrecipient or Vendor not listed in the Exhibit B does need approval prior to reimbursement. If the Recipient wants to move funds between Budget Categories or submits an invoice that if paid would exceed a Budget Category, the Recipient has at least the following choices:

1) Request an amendment from the CEC. The CEC shall not pay the invoice if and until an amendment is executed. In its sole discretion, the CEC might pay the portion of the invoice that does not involve the amount that goes beyond the Budget Category.

2) Retract the invoice and resubmit a corrected one that keeps within Budget Categories. The Recipient can treat the amount paid beyond the Budget Category as match funds if the expenditure meets all of the applicable Agreement requirements for match funds.

Neither this nor any other flexibility in these terms for approval without executing an amendment allows the Recipient, Subrecipient, Sub-Subrecipient, any lower-tiered level of Sub-Subrecipient, or Vendor to exceed the overall Agreement amount.

e. New Items Under Materials and Miscellaneous, and Equipment

Without having to execute an amendment to this Agreement, the CAM must approve in writing of any new materials and miscellaneous expenses of $5,000 or more or new equipment the Recipient, Subrecipient, any lower-tiered level of Sub-Subrecipient, or Vendor plans to purchase and be reimbursed under this Agreement that is not already listed in Exhibit B, Budget. To accomplish this, the Recipient can submit either prior to

invoicing or with its invoice a completed form titled "NEW EQUIPMENT/M&M FORM" which includes a description of the item and a brief explanation of the need for the item. The CAM will approve items that he or she determines to be necessary to the Agreement and do not exceed budgeted amounts for each Budget Category unless Recipient follows the process in this Section 6, part d. directly above.

Any restrictions in the solicitation or elsewhere in the Agreement still apply to the specific items under Materials and Miscellaneous, and Equipment that can be purchased using CEC Funds or Match Share Funds. The restrictions still apply even though a CAM does not have to approve new materials and miscellaneous expenses under $5,000.

f. Assignment of New Personnel to a New or Existing Job Classification

The Recipient, Subrecipient, and any lower-tiered level of Sub-Subrecipient can assign new personnel to a new or existing job classification without CEC approval. However, the Recipient shall keep the CAM informed of all personnel changes and provide any information requested by the CAM during monthly calls and/or quarterly progress reports.

g. Promotion of Existing Personnel to a New or Existing Job Classification

The Recipient, Subrecipient, and any lower-tiered level of Sub-Subrecipient can promote existing personnel to a new or existing job classification without CEC approval. However, the Recipient shall keep the CAM informed of all personnel changes and provide any information requested by the CAM during monthly calls and/or quarterly progress reports. However, as stated in section 8.c. below, the CEC will not pay more than the total amount in each Budget Category, including Direct Labor, without an amendment.

h. Replacing Subrecipients or Vendors

Under these Terms, all changes of Subrecipients and Vendors require advance written approval by at least the CAM. A higher level of approval may be required based on CEC policy. Required approvals are included in the "Changes to Grants – Level of Approval and Notification Chart" commonly referred to as the "Changes Chart."

Recipients may be reimbursed for actual expenses incurred by a new Vendor during the term of this Agreement, even if CEC written approval comes after the entity has completed work on the project. However, if the new Vendor is not approved by the CEC, the CEC will not reimburse for any expenses charged for the entity. Accordingly, Recipients are strongly encouraged to obtain **advance** written approval for new Vendors or risk not being reimbursed for their work.

However, any work completed by an entity that may replace an existing Subrecipient WILL NOT BE REIMBURSED for any work completed prior to advance written approval. If a Subrecipient expends funds prior to approval, they can only be claimed as Match Funds.

7. CONTRACTING AND PROCUREMENT PROCEDURES

This section provides general requirements for Subawards entered into between the Recipient and Subrecipients and Vendors for the performance of this Agreement.

a. Recipient's Obligations to Subrecipients and Vendors

1) The Recipient is responsible for handling all contractual and administrative issues arising out of or related to any Subawards it enters into for the performance of this Agreement.

2) Except for the "CEC as Third-Party Beneficiary" term (see section 22.m), nothing contained in this Agreement or otherwise creates any contractual relation between the CEC and any Subrecipients and Vendors, and no Subaward may relieve the Recipient of its responsibilities under this Agreement. The Recipient agrees to be as fully responsible to the CEC for the acts and omissions of its Subrecipients and Vendors or persons directly or indirectly employed by any of them as it is for the acts and omissions of persons directly employed by the Recipient.

   The Recipient's obligation to pay its Subrecipients and Vendors is an independent obligation from the CEC's obligation to make payments to the Recipient. As a result, the CEC has no obligation to pay or enforce the payment of any funds to any Subrecipient or Vendor.

3) The Recipient is responsible for establishing and maintaining Subawards with and reimbursing each Subrecipient and Vendor for work performed in accordance with the terms of this Agreement.

4) A Subrecipient is defined as a person or entity that receives grant funds directly from the Recipient and is entrusted by the Recipient to make decisions about how to conduct some of the Agreement's activities. A Subrecipient's role involves discretion over grant activities and is not merely just selling goods or services.

   Characteristics that support the classification of the entity as a Subrecipient include when the entity:

   - Has its performance measured in relation to whether objectives of a CEC program were met;

- Has responsibility for programmatic decision-making;
- Is responsible for adherence to applicable CEC program requirements specified in the CEC award agreement;
- In accordance with its agreement, uses the CEC funds to carry out a program for a public purpose specified in authorizing statute, as opposed to providing goods or services for the benefit of the Recipient or Subrecipient; or,
- Provides match share funding contributions to this Agreement.

A Sub-Subrecipient has the same meaning as a Subrecipient except that it receives grant funds from a Subrecipient. There can also be further levels below of Sub-Subrecipients.

5) A Vendor is defined as a person or entity that sells goods or services to the Recipient, Subrecipient, or any lower-tiered level of Sub-Subrecipient, in exchange for some of the grant funds, and does not make decisions about how to perform the Agreement's activities. The Vendor's role is ministerial and does not involve discretion over Agreement activities. A Vendor is an entity selected through a competitive process or is otherwise providing a product or service at a fair and reasonable price. Characteristics indicative of a procurement relationship between the Recipient, Subrecipient, and any lower-tiered level of Sub-Subrecipient and a Vendor are when the Vendor:

- Provides the goods and services within normal business operations;
- Provides similar goods or services to many different purchasers;
- Normally operates in a competitive environment;
- Provides goods or services that are ancillary to the operation of the CEC program; and
- May not be subject to compliance with all of the requirements of the CEC program as a result of the agreement, though similar requirements may apply for other reasons.

b. Subrecipient Flow-Down Terms

Subrecipients funded in whole or in part by this Agreement must include language conforming to the terms below, unless the Subawards are entered into by the University of California (UC) or the U.S. Department of Energy (DOE) national laboratories. UC may use the terms and conditions negotiated by the CEC with UC for its Subawards. DOE national laboratories may use the terms and conditions negotiated with DOE (please contact the Commission Grants Officer for these terms). Recipients do not have to flow down the terms on this list that in their respective sections only state "[RESERVED]."

- Standard of Performance (Section 3)
- Legal Statements on Products (included in Section 5, “Products”). This term does not have to be included if the Subrecipient will not generate any Products.
- Profit (Section 7.g.)
- Travel and Per Diem (Section 9). This term does not have to be included if the Subrecipient will not be reimbursed for travel with CEC funds.
- Prevailing Wage (Section 10)
- Recordkeeping, Cost Accounting, and Auditing (Section 11)
- Equipment (Section 14). This term does not have to be included if the Subrecipient will not be reimbursed for equipment with CEC funds.
- Termination, Executive Order N-6-22 – Russia Sanctions (Section 16.d)
- Indemnification (Section 17)
- Confidential Recipient Information (Section 18). This term does not have to be included if the Subrecipient will not have access to or generate confidential information. Confidential Recipient Information as defined in Section 18.
  Pre-Existing and Independently Funded Intellectual Property (Section 19)
- Intellectual Property (Section 20)
- Royalty Payments to the Commission (Section 21)
- Access to Sites and Records (included in Section 22, “General Provisions”)
- CEC as Third-Party Beneficiary (included in Section 22, “General Provisions”)
- Nondiscrimination (included in Section 23, “Certifications and Compliance”)
- California Taxpayer Access to Publicly Funded Research Act (Section 24)
- Receipt of Confidential Information and Personal Information (Section 26)

- Survival of the following sections:
  - Equipment (Section 14)
  - Recordkeeping, Cost Accounting, and Auditing (Section 11)
  - Pre-Existing and Independently Funded Intellectual Property
  - (Section 19)
  - Intellectual Property (Section 20)
  - Royalty Payments to the Commission (Section 21)
  - Access to Sites and Records (included in Section 22, “General Provisions”)
  - CEC as Third Party Beneficiary (included in Section 22, “General Provisions”)
  - California Taxpayer Access to Publicly Funded Research Act (Section 24)
  - Receipt of Confidential Information and Personal Information (Section 26)

Subrecipients funded in whole or in part by this Agreement must also include the following:

- A clear and accurate description of the material, products, or services to be procured.
- A detailed budget and timeline.
- Provisions that allow for administrative, contractual, or legal remedies in instances where subcontractors breach contract terms, in addition to sanctions and penalties as may be appropriate.
- Provisions for termination by the Recipient, including termination procedures and the basis for settlement.
- A statement that further assignments will not be made to any third or
- subsequent tier subcontractor without additional advance written consent of the Commission.

c. Vendor Flow-Down Terms

The flow-down requirements either come from the CEC or the law. Recipient does not have to include any of the CEC-created Subrecipient flow-down terms in its Subawards with Vendors unless it is necessary for the Recipient to meet its obligations to the CEC under this Agreement. But the Recipient is still required to make sure Vendors comply with all applicable laws. For example, the Recipient still must ensure any Vendor complies with applicable Public Work Requirements, including the payment of prevailing wage, and also with the Nondiscrimination clause. These are requirements under the law.

The Recipient does not have to include in its Subawards with Vendors, CEC-created terms, such as Equipment, Travel and Per Diem, Retention of Records, and Audits, if the Recipient does not need them to fulfill its obligations to the CEC. An example of when the Recipient might need to include a CEC-created term in a Vendor Subaward is if intellectual property and royalty payments are involved. The Recipient must ensure the CEC has the intellectual property rights required under this Agreement and receives royalty payments due. If, for example, a Vendor creates intellectual property that the Recipient provides to the CEC as part of this Agreement, the Recipient shall ensure its Vendor Subaward secures the appropriate rights. Another example is the receipt of confidential information of personal information. If a vendor will have access to confidential information of personal information provided by the Energy Commission or a third-party for the performance of this Agreement, the Recipient must ensure its agreement with the vendor includes the Energy Commission's special terms and conditions for the receipt of confidential information and personal information before the vendor has access to any such information.

d. Audits

All Subawards entered into for the performance of this Agreement are subject to examination and audit by the CEC and/or Bureau of State Audits for a period of three (3) years after payment of the Recipient's final invoice under this Agreement.

e. Copies of Subawards

The Recipient must provide a copy of its Subawards upon request by the CEC.

f. Conflicting Subcontract Terms

Prior to the execution of this Agreement, the Recipient will notify the CAM of any known or reasonably foreseeable conflicts between this Agreement and any of its Subawards (e.g., conflicting intellectual property or payment terms). If the Recipient discovers any such conflicts after the execution of this Agreement, it will notify the CAM of the conflict within fifteen (15) days of discovery. The CEC may, without prejudice to its other rights and remedies, terminate this Agreement if any conflict impairs or diminishes its value.

g. Profit

1) Recipient shall ensure that only Subrecipients, Sub-Subrecipients, and Vendors meeting the definition of an "Unrelated Company" include in their budgets, invoice for, and receive a profit.

2) For purposes of this Agreement, an Unrelated Company is defined as a for-profit business, appropriately licensed and in good standing, that does NOT meet any of the following criteria:

a) Directly or indirectly, partially or fully owns or controls Recipient. This includes, but is not limited to, owning 5% or more of Recipient's stock.

b) Is directly or indirectly, partially or fully owned or controlled by Recipient. This includes, but is not limited to, having 5% or more of stock owned by Recipient.

c) Has one or more common employees, including, but not limited to, owners, officers, directors, or managers, with Recipient.

d) Shares a Parent Company with Recipient. For purposes of this Agreement, Parent Company is defined as an entity that directly or indirectly, partially or fully owns or controls both the Recipient and the Subrecipient or Sub-Subrecipient or shares the same

employees with them. This includes, but is not limited to, owning 5% or more of stock in both the Recipient and Subrecipient or Sub-Subrecipient.

e) Does not, for any other reason, have an arm's-length relationship (e.g., a relationship involving independent, competing interests) with the Recipient. This could be due to any reason, including but not limited to, both entities being part of the same business group or could stem from family or personal ties between officials of the two entities.

3) Recipient shall further ensure the profit to each Unrelated Company that is a Subrecipient or a Sub-Subrecipient does not exceed 10% of only the CEC funds the Unrelated Company will receive. None of the following count towards the 10% profit maximum:

a) The Profit Amount Itself. For example, assume Recipient and its Subrecipient SubX agree to a total, all inclusive, budget amount of $200,000 in CEC funds. SubX cannot claim $20,000 of this as profit. If $180,000 is the base for expenses on which profit is calculated, 10% is only $18,000 and not $20,000.

b) Non-CEC Funds in any Form. Only CEC funds a recipient will receive can count towards profit. For example, assume Recipient's Subrecipient SubX has a budget showing it receiving $100,000 in CEC funds (not including the profit amount) and $50,000 in federal funds with the federal funds counting as match under the CEC's grant. The maximum SubX can be paid with CEC funds for profit is 10% of $100,000 CEC funds, or $10,000 (assuming the $100,000 CEC base does not include any of the other expenses that cannot be included in calculating profit). The $50,000 in federal funds does not count towards the profit calculation because it is not CEC funds.

c) Equipment. Continuing the example from b), assume SubX's $100,000 CEC budget shows $10,000 earmarked for equipment. The maximum SubX can be paid with CEC funds for profit is 10% of $90,000, or $9,000 (assuming the $90,000 base does not include any of the other expenses that cannot be included in calculating profit).

d) Amounts Paid to Sub-Subrecipients and Vendors. Continuing the example from b) and c), assume SubX's $100,000 CEC budget also shows $20,000 earmarked to pay Sub-SubY. SubX cannot include in its profit calculation the $20,000 to Sub-SubY. The maximum SubX can be paid with CEC funds for profit is 10% of $70,000 ($100,000 in CEC funds minus $10,000

in equipment from c) above and minus $20,000 to Sub-SubY) or $7,000.

Vendor Unrelated Companies do not have a 10% profit maximum and also do not have to adhere to the same restrictions in a) through d) directly above. However, as stated in the requirements for Vendors in Section 7.a.5) in this Exhibit C, Recipient must be able to demonstrate that the Vendor was selected through a competitive process or is otherwise providing a product or service at a fair and reasonable price.

4) Profit can only be paid by the CEC as the amounts on which it is based are invoiced and paid. Profit will NOT be advanced. Continuing the example from 2.d) above, assume SubX submits an invoice for $5,000 (of its $70,000) in costs on which profit is based, and the Recipient includes SubX's invoice as part of its invoice to the CEC. The Recipient can include in the invoice, and the CEC will pay, assuming other Agreement requirements are met, $500 in profit on this particular invoice. Please realize that Retention (see Section 8.n. in these Terms) may reduce the CEC's overall payment on the invoice.

5) Budget changes may affect an Unrelated Company's profit. For example, funds moved from a Subrecipient's direct labor, a category counting towards the profit calculation, to a Sub-Subrecipient, a category that does not count towards the profit calculation, would reduce the allowable profit.

h. Penalties for Noncompliance

Without limiting the CEC's other rights and remedies, failure to comply with the above requirements may result in the termination of this Agreement and repayment of any profit amounts in violation of these terms.

8. PAYMENT OF FUNDS

a. Definitions

For purposes of this Section 8, the following terms have the following meaning:

- "Advance Payment" means the CEC pays Recipient prior to the Recipient Incurring or Paying the expense.
- "Incurred Cost" means an expense for which the Recipient has become liable (legally obligated) to pay. Here are examples of incurred costs:
  - The Recipient's staff has completed work during the month but has not been paid by the Recipient. These labor and associated costs (e.g., fringe benefits) are considered Incurred Costs.

- The Recipient has purchased a piece of equipment **and** received an invoice, bill, or receipt. The Recipient has not yet paid the invoice. The invoice shows the amount to be paid and confirmation of the sale. This is an Incurred Cost.
  Incurred Costs for equipment DO NOT include purchase orders unless accompanied by an invoice, bill, or receipt that shows the payment amount due to the seller for the equipment.

- "Paid Cost" means an expense for which the Recipient has already made payment.

b. Advance Payments

Recipients can receive Advance Payments only for Subrecipients or any lower-tiered level of Sub-Subrecipient with the U.S. Department of Energy laboratories. Otherwise, Advance Payments are NOT allowed under this Agreement. The CEC in its sole discretion, and not the Recipient, decides if the CEC will make an Advance Payment.

c. Reimbursable Cost Requirements

In addition to any other requirements in this Agreement, the CEC is only obligated to reimburse the Recipient for Incurred and Paid Costs that are (1) incurred during the Agreement Term; (2) invoiced within the required timeframes of this Agreement; (3) made in accordance with the Agreement's Budget; and (4) actual and allowable expenses under this Agreement.

The only exception to the CEC paying actual expenses is rounding to the nearest cent. The Recipient, Subrecipient, and any lower-tiered level of Sub-Subrecipient shall round invoiced amounts to the nearest cent ($0.01) using standard rounding, which is rounding down from $0.000 through $0.004, and rounding up for $0.005 through $0.009. Rounding cannot be used to exceed the amount in any Budget Category or exceed the total Agreement amount.

In Exhibit B, the Budget, the rates for Direct Labor and Fringe Benefits are treated as estimates and not capped rates. The Recipient, Subrecipient, and any lower-tiered level of Sub-Subrecipient can invoice at higher rates as long as it is only invoicing for actual expenditures it has made. However, the CEC will not pay more than the total amount in each Budget Category without an amendment, or for more than the total Agreement amount.

Please note that rates listed in Exhibit B, the Budget, are NOT "negotiated rates" that can be charged – documentation must be made available upon request to show that the rates charged reflect actual costs incurred.

This Exhibit C's terms allow the Recipient, Subrecipient, and any lower-tiered level of Sub-Subrecipient to receive reimbursement for actual Indirect Costs. A Recipient, Subrecipient, and any lower-tiered level of Sub-Subrecipient may choose among three options described below. However, the option selected cannot increase the Indirect Cost amount included in the application upon

which the application was scored. Once the Recipient, Subrecipient, and any lower-tiered level of Sub-Subrecipient has received payment for Indirect Costs for one of the options, it cannot switch. It is locked into that option.

Option 1: De Minimis

The Recipient, Subrecipient, and any lower-tiered level of Sub-Subrecipient can elect to invoice and receive a de minimis amount at the set rate of 10% of the Modified Total Direct Costs (MTDC) for Indirect Costs. This cannot be combined with any other Indirect Rate option.

MTDC is defined for purposes of this Agreement as all direct salaries and wages, applicable fringe benefits, materials and supplies, services, travel, and up to the first $25,000 of each subaward (regardless of the period of performance of the subawards under the award). MTDC excludes equipment, capital expenditures, rental costs, tuition remission, scholarships and fellowships, and the portion of ach subaward in excess of $25,000. This is the same definition used in federal grants. Keeping this the same as the federal definition should make it easy for entities that have both federal and CEC grants and elect this option.

Entities choosing this de minimis option for Indirect Costs will not have to provide backup documentation for the de minimis amount and will not be audited on it.

Option 2: Defense Contract Audit Agency (DCAA) or other Federally Approved Indirect Rate

A Recipient, Subrecipient, and any lower-tiered level of Sub-Subrecipient that has a federally approved indirect rate from DCAA or another Federal agency may use the approved indirect rate for this Agreement. A copy of the Federal agency's letter must be provided, and the letter, or the letter together with other supporting documentation, must allow the CEC to verify that the rates charged to the CEC are the federally-approved rates.

This rate will typically shift annually, and this shift is generally acceptable. This is the only Indirect Cost option that is not strictly subject to the maximum rate cap that typically applies to Indirect Costs. If the federal rate decreases from year to year, that will be a cost savings under this budget category. If the federal rate increases from year to year, this will require a budget reallocation. If the CEC, in its sole discretion, determines that a budget reallocation to accommodate an increased Indirect Rate would risk the ultimate success of this Agreement, or is otherwise not in its best interest, the CEC reserves, in addition to all of its other rights and remedies, the right to either propose a smaller increase that would not risk the ultimate success of the project, or refuse to increase the Indirect Rate. For any increase the CEC will not reimburse from CEC Funds, the entity can choose to charge the increase as Match Funds.

If this Option 2 is chosen, the entity will not be audited on this budget category.

Option 3: Indirect Costs based on Cost Allocation Plan

A Recipient, Subrecipient, and any lower-tiered level of Sub-Subrecipient may choose to budget for Indirect Costs based on the entity's cost allocation plan. The amount of Indirect Costs included in Exhibit B cannot be increased through a budget reallocation. If this option is selected, Indirect Costs are subject to audit, and the entity is required to provide backup documentation upon request proving the actual amount of their Indirect Costs.

d. Recipient's 14-Day Payment Requirement for Incurred Costs

The Recipient, Subrecipients, and all lower-tiered Subrecipients shall pay ALL Incurred Costs within 14 calendar days of receiving payment under this Agreement for the Incurred Costs. For example, if the Recipient invoices and then receives payment from the CEC on September 15 for an Incurred Cost of $10,000, the Recipient shall pay the entire $10,000 by September 29. This requirement is needed to prevent entities from creating long lead times for Incurred Costs (e.g., invoicing and receiving payment from the CEC but not paying for the Incurred Costs for weeks or months).

The Recipient shall only invoice the CEC, Subrecipients shall only invoice the Recipient (and so on for any lower-tiered level of Sub-Subrecipients), for Incurred Costs it will pay within 14 calendar days of receiving payment of CEC funds. For example, assume the Recipient has an Incurred Cost for a piece of equipment that costs $300,000 and will pay in three installments of $100,000 each over three months. The Recipient shall only invoice the Commission for $100,000 each month. The Recipient shall not invoice for the entire $300,000 and retain the balance over the three months.

For any Incurred Costs for which the Recipient, Subrecipient, and any lower-tiered level of Sub-Subrecipient has received CEC funds and does not pay within 14 calendar days, the entity shall on the very next business day after the 14 calendar days submit repayment of the unpaid amount back to the CEC. Repaid funds will be placed back into the Agreement and will be available to reimburse allowable costs in accordance with this Agreement. When making a repayment under this provision, the Recipient shall specify "Repayment of Unspent Funds under Agreement [Insert this Agreement #]." Recipient shall remit the repayment to:

California Energy Commission
Accounting Office
715 P Street, MS-2
Sacramento, CA 95814

This repayment requirement of the Recipient is in addition to any other rights the CEC can enforce relative to this Agreement. Recipient agrees and

acknowledges that time is of the essence in paying Incurred Costs and submitting repayments and the CEC can treat the Recipient's breach of either requirement as a material breach. Recipient can contact the CAM for any questions about the logistics of making repayments.

e. Payment Requests

The Recipient may request payment from the CEC at any time during the term of this Agreement but no more frequently than monthly. The final payment request, including retention, MUST be received by the CEC no later than the Agreement end date.

Recipient agrees and acknowledges that time is of the essence in submitting the final payment request. The CEC has a limited period of time, set by law, in which it can reimburse funds under this Agreement. Without prejudice to the CEC's other rights, the Recipient risks not receiving any funds, and relieves the CEC of any duty and liability whatsoever to pay, for any payment requests received after the end of the Agreement.

No reimbursement for food or beverages shall be made other than allowable per diem charges.

All Recipient expenditures, reimbursable and match, must occur within the approved term of this Agreement.

f. Invoice Approval and Disputes:

Each request for payment is subject to the CAM's approval. Payments will be made to the Recipient for undisputed invoices. An undisputed invoice is an invoice submitted by the Recipient for work performed, for which project expenditures meet all Agreement conditions, and for which additional evidence is not required to determine its validity.

The invoice will be disputed if the invoice is inaccurate or if it does not comply with the terms of this Agreement. If the invoice is disputed, the Recipient will be notified in writing.

g. Recipient's headquarters:

For purposes of payment, the Recipient's headquarters is the location of the Recipient's office where the majority of its employees assigned responsibilities for this Agreement are permanently assigned.

h. Multiple Non-Energy Commission Funding Sources:

No payment will be made for costs identified in Recipient, Subrecipient, and any lower-tiered level of Sub-Subrecipient invoices that have been or will be

reimbursed by another source, including but not limited to an agreement with another government entity.

"Government Entity" means: (1) a state governmental agency; (2) a state college or university; (3) a local government entity or agency, including those created as a Joint Powers Authority; (4) an auxiliary organization of the California State University or a California community college; (5) the federal government; (6) a foundation organized to support the Board of Governors of the California Community Colleges; and (7) an auxiliary organization of the Student Aid Commission established under California Education Code Section 69522.

i. Reduced funding:

If the CEC does not receive sufficient funds under the Budget Act to fully fund the work identified in Exhibit A (Scope of Work), the following will occur:

1) If the Energy Commission has received a reduced amount of funds for the work, it may: (1) offer an Agreement amendment to the Recipient to reflect the reduced amount; or (2) cancel this Agreement (with no liability occurring to the State).

2) If the Energy Commission has received no funds for the work identified in Exhibit A: (1) this Agreement will be of no force and effect; (2) the State will have no obligation to pay any funds to the Recipient; and (3) the Recipient will have no obligation to perform any work under this Agreement.

j. Allowability of Costs

1) Allowable Costs

The costs for which the Recipient will be reimbursed under this Agreement include all actual costs, direct and indirect, incurred in the performance of the work identified in the Scope of Work. Costs must be incurred within the Agreement term. Factors to be considered in determining whether an individual item of cost is allowable include: (i) reasonableness of the item, including necessity of the item for the work; (ii) applicable federal cost principles or acquisition regulations incorporated by reference in Section 2 of this Agreement; and (iii) the terms and conditions and any other requirements of this Agreement.

2) Unallowable Costs

Recipient shall not invoice or obtain from the CEC any profit for itself under this Agreement. This Agreement is a grant for the Recipient's project. This is not a services contract to the state. The Recipient is already receiving the benefit of the grant funds. The CEC shall not pay profit to the Recipient on top of the benefit it is receiving from the grant

funds in this Agreement. Some Subrecipients and Sub-Subrecipients may be able to receive up to 10% profit (please refer to section 7.g. in these terms).

Below are examples of other unallowable costs. Details concerning the allowability of costs are available from the CEC's Accounting Office.

a) Contingency costs;
b) Imputed costs (e.g., cost of money);
c) Fines and penalties;
d) Losses;
e) Excess profit taxes; and
f) Unapproved, increased rates and fees for this Agreement.

3) Except as provided for in this Agreement or applicable California law or regulations, the Recipient will use the federal cost principles and/or acquisition regulations incorporated by reference in Section 2 of this Agreement when determining allowable and unallowable costs. In the event of a conflict, this Agreement takes precedence over the federal cost principles and/or acquisition regulations.

k. Payment Request Format

The Recipient, and any Subrecipients or lower-tiered level of Sub-Subrecipient with a total budget of $100,000 or more, shall use the Invoice Template and any further modifications to it, provided by the CAM. The CAM can change the Invoice Template without amending this Agreement.

Please submit invoices electronically per the instructions included in the document entitled "Procedures for Submitting and Reviewing Grant Invoices Electronically" available at https://www.energy.ca.gov/media/4469.

Recipient shall provide documentation showing the Recipient's payment of Incurred Costs as soon as possible and not later than three working days from a request from CEC personnel.

l. Certification

The Recipient, and any Subrecipients or lower-tiered level of Sub-Subrecipient with a total budget of $100,000 or more shall include and sign the certification provided by the CAM in the Invoice Template. The CAM can change this certification without amending this Agreement.

m. Retention

The CEC shall retain 10 percent of any payment request or 10 percent of the total CEC award at the end of the Agreement. The CEC has the sole discretion to decide which of these methods of retention will be used in this Agreement. The Recipient must submit a completed payment request

requesting release of the retention within the required timeframe (see part e. “Payment Requests” above in this term). The Commission Agreement Manager will review the project file and, when satisfied that the terms of the funding Agreement have been fulfilled, will authorize release of the retention.

Retention may be released upon completion of tasks that are considered separate and distinct (i.e., the task is a stand-alone piece of work and could be completed without the other tasks). Tasks for administration or management of the Agreement and/or subcontractors are not considered separate and distinct tasks. The tasks for which retention may be released prior to the end of the Agreement must be identified in Exhibit B (budget) or elsewhere in this Agreement.

When the CEC withholds 10% retention from each invoice, the Recipient can choose to flow down the retention requirement to its Subrecipients subject to the following restrictions and any other requirements in this Agreement:

- The Recipient shall not flow down retention requirements to U.S. Department of Energy national laboratory Subrecipients.
- The retention flowed down to Subrecipients can only be up to a total of 10% of the amount of CEC funds the Subrecipient is to receive. The Recipient is responsible for carrying the retention for its funded portion of the entire Agreement and cannot pass its share of retention to Subrecipients or Vendors.
- Here are three examples:

i. A Subrecipient submits an invoice for $100,000 to the Recipient, and the Recipient in turn submits it to the CEC. The CEC will only pay $90,000 of the invoice and the Recipient can elect to pay only $90,000 to the Subrecipient.

ii. The Subrecipient is the U.S. Department of Energy national laboratory and it submits an advance request for $100,000 to the Recipient, including any other documents required in the CEC’s U.S. Department of Energy Terms and Conditions. The Recipient in turn submits the advance requests to the CEC for payment. The CEC will pay the full amount of the advance requests to the Recipient and the Recipient must pay the full amount to the U.S. Department of Energy.

iii. The Recipient’s submits an invoice for its own staff in the amount of $20,000. The CEC will only pay $18,000 to the Recipient, and the Recipient cannot withhold the $2,000 difference from Subrecipients or Vendor reimbursements.

These requirements apply to all levels of Subrecipients (e.g., any lower-tiered level of Sub-Subrecipients).

9. TRAVEL AND PER DIEM

a. Travel not listed in Exhibit B, the Budget, can be added without an amendment via CAM approval. CAM approval can come in one of two forms: written authorization from the CAM prior to the trip being taken, or through the invoice review. Outside of a budget reallocation, additional travel requests are submitted using the CEC's Travel Form. Any travel taken that is not listed in Exhibit B, the Budget, or not pre-approved by the CAM in writing, is at the financial risk of the Recipient, Subrecipient, and any lower-tiered level of Sub-Subrecipient taking the trip. Please note that the Recipient, Subrecipient, and any lower-tiered level of Sub-Subrecipient cannot invoice and be paid for more than the total amount in the Travel Budget Category without an amendment, or for more than the total Agreement amount.

b. No reimbursement for food or beverages will be made other than for allowable per diem charges.

c. The Recipient will be reimbursed for authorized travel and per diem up to, but not to exceed, the rates allowed nonrepresented state employees. Current allowable travel reimbursement rates can be obtained from the Commission's web site at http://www.energy.ca.gov/contracts/TRAVEL_PER_DIEM.PDF. Because the rates can change over time, Recipient, Subrecipient, and any lower-tiered level of Sub-Subrecipient will be allowed to be reimbursed for the rates in the Grant Manual when the trip expenses become an Incurred Cost. The CEC shall notify the Recipient in writing by way of the Active Agreements listserve if the travel rates in the Grant Manual change. Please sign up for the Active Agreements listserve to stay informed of all updates.

d. Lodging

   The Recipient, Subrecipient, and any lower-tiered level of Sub-Subrecipient can invoice at standard room rates. The CEC will not reimburse for luxury accommodations.

e. Airfare

   The Recipient, Subrecipient, and any lower-tiered level of Sub-Subrecipient can invoice at coach rates on commercial flights. The CEC will not pay for upgrades on flights.

f. Rental Car

   The Recipient, Subrecipient, and any lower-tiered level of Sub-Subrecipient can invoice for vehicles appropriate for the purpose of the travel. The CEC will not reimburse expenses for luxury vehicles.

g. Bus/Train

The Recipient, Subrecipient, and any lower-tiered level of Sub-Subrecipient can invoice for standard coach rates. The CEC will not reimburse for upgrades.

h. Per Diem

Per diem is allowable for actual costs incurred up to the total daily maximum for the following combined expenses:

- Meals
- Incidentals (i.e., tips for hotel staff and taxi/ride share drivers)
- Parking
- Tolls
- Taxi/ride share

The CEC will not reimburse any expenses under this Agreement for alcoholic beverages. In addition, the daily per diem is for the individual expenses of those traveling and working on the Agreement only. It cannot be used to pay expenses of others (e.g., it cannot be used to buy a meal for someone else).

10. PREVAILING WAGE

a. Requirement

Projects funded by the Energy Commission often involve construction, alteration, demolition, installation, repair, or maintenance work over $1,000. Such projects might be considered “public works” under the California Labor Code (See California Labor Code Section 1720 et seq. and Title 8 California Code of Regulations, Section 16000 et seq.). Public works projects require the payment of prevailing wages. Prevailing wage rates can be significantly higher than non-prevailing wage rates.

b. Determination of Project’s Status

Only the California Department of Industrial Relations (DIR) and courts of competent jurisdiction may issue legally binding determinations that a particular project is or is not a public work. If the Recipient is unsure whether the project funded by the Agreement is a “public work” as defined in the California Labor Code, it may wish to seek a timely determination from DIR or an appropriate court. As such processes can be time consuming, it may not be possible to obtain a timely determination before the date for performance of the Agreement.
By accepting this grant, the Recipient is fully responsible for complying with all California public works requirements, including but not limited to payment of prevailing wage. As a material term of this grant, the Recipient must either:

1) Timely obtain a legally binding determination from DIR or a court of competent jurisdiction before work begins on the project that the proposed project is not a public work; or

2) Assume that the project is a public work and ensure that:

- Prevailing wages are paid unless and until DIR or a court of competent jurisdiction determines that the project is not a public work;
- The project budget for labor reflects these prevailing wage requirements; and
- The project complies with all other requirements of prevailing wage law, including but not limited to keeping accurate payroll records and complying with all working hour requirements and apprenticeship obligations.

California Prevailing Wage law provides for substantial damages and financial penalties for failure to pay prevailing wages when such payment is required.

c. Subrecipient and Vendor Flow-down Requirements

The Recipient will ensure that its Subrecipients, any lower-tiered level of Sub-Subrecipients, and Vendors also comply with the public works/prevailing wage requirements above. As applicable, the Recipient will ensure that all agreements with its Subrecipients and Vendors to perform work related to this Project contain the above terms regarding payment of prevailing wages on public works projects, and also as applicable that Subrecipients and Vendors also contain these terms. The Recipient is responsible for any failure of its Subrecipients, any lower-tiered level of Sub-Subrecipients, and Vendors to comply with California prevailing wage and public works laws.

d. Indemnification and Breach

Any failure of the Recipient or its Subrecipients, any lower-tiered level of Sub-Subrecipients, and Vendors to comply with the above requirements will constitute breach of this Agreement which excuses the CEC's performance of this Agreement at the CEC's option, and will be at the Recipient's sole risk. In such a case, the CEC will refuse payment to the Recipient of any amount under this award and the CEC will be released, at its option, from any further performance of this Agreement or any portion thereof. The Recipient will indemnify the CEC and hold it harmless for any and all financial consequences arising out of or resulting from the failure of the Recipient and/or any of its subcontractors to pay prevailing wages or to otherwise comply with the requirements of prevailing wage law.

e. Budget

The Recipient's budget on public works projects must indicate which job classifications are subject to prevailing wage. For detailed information about prevailing wage and the process to determine if the proposed project is a public work, the Recipient may wish to contact DIR or a qualified labor attorney for guidance.

f. Covered Trades

For public works projects, the Recipient may contact DIR for a list of covered trades and the applicable prevailing wage.

g. Questions

If the Recipient has any questions about this contractual requirement or the wage, record keeping, apprenticeship, or other significant requirements of California prevailing wage law, the Recipient should consult DIR and/or a qualified labor attorney before entering into this Agreement.

h. Certification

The Recipient will certify to the CEC on each payment request form either that: (a) prevailing wages were paid to eligible workers who provided labor for work covered by the payment request and the Recipient and all contractors and subcontractors otherwise complied with all California prevailing wage laws; or (b) the project is not a public work requiring the payment of prevailing wages. In the latter case, the Recipient will provide competent proof of a DIR or court determination that the project is not a public work requiring the payment of prevailing wages.

Prior to the release of any retained funds under this Agreement, the Recipient will submit to the CEC the above-described certificate signed by the Recipient and all Subrecipients, any lower-tiered level of Sub-Subrecipients, and Vendors performing public works activities on the project. Absent this certificate, the Recipient will have no right to any funds under this Agreement, and CEC will be relieved of any obligation to pay any funds.

11. RECORDKEEPING, COST ACCOUNTING, AND AUDITING

a. Cost Accounting

The Recipient will keep separate, complete, and correct accounting of the costs involved in completing the project and any match-funded portion of the project. The CEC or its agent will have the right to examine the Recipient's books of accounts at all reasonable times, to the extent necessary to verify the accuracy of the Recipient's reports.

b. Accounting Procedures

The Recipient's costs will be determined on the basis of its accounting system procedures and practices employed as of the effective date of this Agreement, provided that the Recipient uses generally accepted accounting principles and cost reimbursement practices. The Recipient's cost accounting practices used in accumulating and reporting costs during the performance of this Agreement will be consistent with the practices used in estimating costs for any proposal to which this Agreement relates; provided that such practices are consistent with the other terms of this Agreement and that such costs may be accumulated and reported in greater detail during performance of this Agreement.

The Recipient's accounting system will distinguish between direct and indirect costs. All costs incurred for the same purpose, in like circumstances, are either direct costs only or indirect costs only with respect to costs incurred under this Agreement.

c. Audit Rights

The Recipient will maintain books, records, documents, and other evidence, based on the procedures set forth above, sufficient to reflect properly all costs claimed to have been incurred in the performance of this Agreement. The CEC, another state agency, and/or a public accounting firm designated by the CEC may audit the Recipient's accounting records at all reasonable times, with prior notice by the CEC.

It is the intent of the parties that the audits will ordinarily be performed not more frequently than once every twelve (12) months during the performance of the work and once at any time within three (3) years after payment by the CEC of the Recipient's final invoice. However, performance of any such interim audits by the CEC does not preclude further audit.

The Recipient will allow the auditor(s) to access such records during normal business hours, and will allow interviews of any employees who might reasonably have information related to such records. The Recipient will include a similar right of the state to audit records and interview staff in any subcontract related to the performance of this Agreement.

d. Refund to the Energy Commission

If the CEC determines that any invoiced and paid amounts exceed the actual allowable incurred costs, the Recipient will repay the amounts to the CEC within thirty (30) days of request or as otherwise agreed by the CEC and the Recipient. If the CEC does not receive such repayments, it will be entitled to take actions such as withholding further payments to the Recipient and seeking repayment from the Recipient.

e. Audit Cost

The Recipient will bear its cost of participating in any audit (e.g., mailing or travel expenses). The CEC will bear the cost of conducting the audit unless the audit reveals an error detrimental to the CEC that exceeds more than ten percent (10%) or $5,000 (whichever is greater) of the amount audited. The Recipient will pay the refund as specified in subsection (d), and will reimburse the CEC for reasonable costs and expenses incurred by the CEC in conducting the audit.

f. Match or Cost Share

If the budget includes a match share requirement, the Recipient's commitment of resources, as described in this Agreement, is a required expenditure for receipt of CEC funds. The funds will be released only if the required match percentages are expended concurrently or in advance of the CEC funds. The Commission Agreement Manager, in writing and with supervisor approval, can authorize a Recipient to spend CEC funds in advance of Match Funds pursuant to a Match Fund Spending Plan. The Plan must estimate how Match funds and CEC funds will be spent over each quarter and briefly explain why it is not practical to spend Match Funds concurrent with CEC funds. While this term allows flexibility, the Recipient agrees to spend the agreed match as soon as practical during the Agreement in order to resume proportionality between CEC funds and Match funds spent. The Recipient must maintain accounting records detailing the expenditure of the match (actual cash and in-kind, non-cash services), and report on match share expenditures on its request for payment.

12. WORKERS' COMPENSATION INSURANCE

a. The Recipient warrants that it carries Worker's Compensation Insurance for all of its employees who will be engaged in the performance of this Agreement and agrees to furnish to the CAM satisfactory evidence of this insurance upon the CAM's request.

b. If the Recipient is self-insured for worker's compensation, it warrants that the self-insurance is permissible under the laws of the State of California and agrees to furnish to the CAM satisfactory evidence of the insurance upon the CAM's request.

13. PERMITS AND CLEARANCES

The Recipient is responsible for ensuring that all necessary permits and environmental documents are prepared and that clearances are obtained from the appropriate agencies.

14. EQUIPMENT

As between the Recipient and CEC, title to equipment acquired by the Recipient with grant funds will vest in the Recipient. The Recipient may use the equipment in the project or program for which it was acquired as long as needed, regardless of whether the project or program continues to be supported by grant funds. However, the Recipient may not sell, lease, encumber the property (i.e., place a legal burden on the property such as a lien), or even transfer possession of it during the Agreement term without the CAM's prior written approval.

The Recipient may refer to the applicable federal regulations incorporated by reference in this Agreement for guidance regarding additional equipment requirements.

15. STOP WORK

CEC staff may, at any time by written notice to the Recipient, require the Recipient to stop all or any part of the work tasks in this Agreement. Stop work orders may be issued for reasons such as a project exceeding budget, noncompliance with the standard of performance, out of scope work, project delays, and misrepresentations.

a. Compliance. Upon receipt of a stop work order, the Recipient must immediately take all necessary steps to comply with the order and to stop the incurrence of costs allocable to the CEC.

b. Canceling a Stop Work Order. The Recipient may resume the work only upon receipt of written instructions from CEC staff.

16. TERMINATION

a. Purpose

Because the CEC is a state entity and provides funding on behalf of all California ratepayers, it must be able to terminate the Agreement upon the default of the Recipient and to proceed with the work required under the Agreement in any manner it deems proper. The Recipient agrees that upon any of the events triggering the termination of the Agreement by the CEC, the CEC has the right to terminate the Agreement, and it would constitute bad faith of the Recipient to interfere with the immediate termination of the Agreement by the CEC.

b. With Cause

The CEC may, for cause, terminate this Agreement upon giving five (5) calendar days advance written notice to the Recipient. In this event, the Recipient will use all reasonable efforts to mitigate its expenses and obligations. The Recipient will relinquish possession of equipment purchased for this Agreement with CEC funds to the CEC, or the Recipient may purchase the equipment as provided by the terms of this Agreement or otherwise by the CEC, with approval of the CEC.
The term "for cause" includes but is not limited to the following:

- Partial or complete loss of match funds;
- Reorganization to a business entity unsatisfactory to the Energy Commission;
- Retention or hiring of Subrecipients or Vendors, or replacement or addition of personnel, that fail to perform to the standards and requirements of this Agreement;
- The Recipient's inability to pay its debts as they become due and/or the Recipient's default of an obligation that impacts its ability to perform under this Agreement; or
- Significant change in state or CEC policy such that the work or product being funded would not be supported by the Commission.

c. Without Cause

The CEC may terminate this Agreement without cause upon giving thirty (30) days advance written notice to the Recipient. In this event, the Recipient will use all reasonable efforts to mitigate its expenses and obligations.

d. Executive Order N-6-22 – Russia Sanctions

On On March 4, 2022, Governor Gavin Newsom issued Executive Order N-6-22 (the EO) regarding Economic Sanctions against Russia and Russian entities and individuals. "Economic Sanctions" refers to sanctions imposed by the U.S. government in response to Russia's actions in

Ukraine, as well as any sanctions imposed under state law. The EO directs state agencies to terminate contracts with, and to refrain from entering any new contracts with, individuals or entities that are determined to be a target of Economic Sanctions. Accordingly, should the State determine Recipient is a target of Economic Sanctions or is conducting prohibited transactions with sanctioned individuals or entities, that shall be grounds for termination of this agreement. The State shall provide Recipient advance written notice of such termination, allowing Recipient at least 30 calendar days to provide a written response. Termination shall be at the sole discretion of the State.

17. INDEMNIFICATION

To the extent allowed under California law, the Recipient will indemnify, defend, and hold harmless the state (including the CEC) and state officers, agents, and employees from any and all claims and losses in connection with the performance of this Agreement.

18. CONFIDENTIAL RECIPIENT INFORMATION

a. Identification of Confidential Recipient Information

1) For the purposes of this Section, “Confidential Recipient Information” refers to information belonging to the Recipient that the Recipient has satisfactorily identified as confidential and the Energy Commission has agreed to designate as confidential under Title 20 California Code of Regulations Section 2505.

2) Prior to the effective date of this Agreement, the Recipient will identify all products (or information contained within products) it considers Confidential Recipient Information, and provide the legal basis for confidentiality, in Attachment 1 to this Exhibit. If the CEC agrees the information is confidential, it will not disclose it except as provided in subsection (b).

3) During the Agreement, if the Recipient obtains or develops additional products (or information contained within products) not originally identified as Confidential Recipient Information in Attachment 1 to this Exhibit, the Recipient will follow the procedures for a request for designation of confidential information as specified in Title 20 California Code of Regulations (CCR) Section 2505.

   The CEC’s Executive Director will make the confidentiality determination. Such subsequent determinations may be added to the list of confidential deliverables in the Attachment 1 to this Exhibit. The CEC will not disclose information subject to an application for confidential designation except as provided in subsection (b).

4) When submitting products containing Confidential Recipient Information, the Recipient will mark each page of any document containing Confidential Recipient Information as “confidential” and present it in a sealed package to the Contracts, Grants, and Loans Office.

   The CAM may require the Recipient to submit a non-confidential version of the product, if it is feasible to separate the Confidential Recipient Information from the non-confidential information. The Recipient is not required to submit such products in a sealed package.

b. Disclosure of Confidential Recipient Information

The CEC will only disclose Confidential Recipient Information under the circumstances specified in Title 20 CCR Sections 2506, 2507, and 2508. All Confidential Recipient Information that is legally disclosed by the Recipient or any other entity will become a public record and will no longer be subject to the CEC's confidentiality designation.

c. Waiver of Consequential Damages

In no event will the CEC, or the state of California be liable for any special, incidental, or consequential damages based on breach of warranty, breach of contract, negligence, strict tort, or any other legal theory for the disclosure of the Confidential Recipient Information, even if the CEC has been advised of the possibility of such damages.

Damages that the CEC, t and the state of California will not be responsible for include but are not limited to: lost profit; lost savings or revenue; lost goodwill; lost use of the product or any associated equipment; cost of capital; cost of any substitute equipment, facilities, or services; downtime; the claims of third parties including customers; and injury to property.

d. Limitations on the Disclosure of Products

During the Agreement, the Recipient, Subrecipients, any lower-tiered level of Sub-Subrecipients, and Vendors must receive written approval from the CAM prior to disclosing the contents of any draft product to a third party. However, if the CEC makes a public statement about the content of any product provided by the Recipient and the Recipient believes the statement is incorrect, the Recipient may state publicly what it believes is correct.

19. PRE-EXISTING AND INDEPENDENTLY FUNDED INTELLECTUAL PROPERTY

[RESERVED]

20. INTELLECTUAL PROPERTY

a. Ownership

1) The Recipient owns all intellectual property, subject to the licenses described in subsection b.

"Intellectual property" means: (a) inventions, technologies, designs, drawings, data, software, formulas, compositions, processes, techniques, works of authorship, trademarks, service marks, and logos that are created, conceived, discovered, made,

developed, altered, or reduced to practice with Agreement or match funds during or after the Agreement term; (b) any associated proprietary rights to these items, such as patent and copyright; and (c) any upgrades or revisions to these items.

"Works of authorship" does not include written products created for Agreement reporting and management purposes, such as reports, summaries, lists, letters, agendas, schedules, and invoices.

2) The CEC owns all products identified in the Scope of Work, with the exception of products that fall within the definition of "intellectual property."

"Product" means any tangible item specified for delivery to the CEC in the Scope of Work.

3) Nothing in this Agreement gives the Contractor any rights to "Confidential Information" and "Personal Information" as defined in Section 26, other than using Confidential Information and Personal Information for the limited purpose of performing Contractor's work under this Agreement in accordance with Section 26.

b. Intellectual Property Licenses

1) The Recipient has a non-exclusive, non-transferable, irrevocable, worldwide, perpetual license to use, publish, translate, modify, and reproduce written products created for Agreement reporting and management purposes, such as reports and summaries.

2) If any intellectual property that is subject to the licenses above has been designated as confidential as specified in Section 18, all license holders will only disclose the intellectual property under the circumstances specified in Title 20 CCR Sections 2506, 2507, and 2508.

All license holders will ensure that their officers, employees, and subcontractors who have access to the intellectual property are informed of and abide by the disclosure limitations in Section 18.

c. Energy Commission's Rights to Inventions

"Invention" means intellectual property that is patentable.

1) March-In Rights

At the CEC's request, the Recipient will forfeit and assign to the CEC all rights to any invention (with the exception of U.S. Department of Energy reserved rights) if the Recipient or assignee has not taken, or is not expected to take within a reasonable time, effective steps to achieve practical application of the invention. The CEC will have the unfettered right to use and/or dispose of the rights in whatever manner it deems most suitable to help transfer the invention into the marketplace, including but not limited to seeking patent protection or licensing the invention.

2) Notice of Patent

If any patent is issued for an invention, the Recipient will send the CAM written notice of the issuance within three (3) months of the issuance date. The notice must include the patent title, issuance number, and a general description of the invention.

3) Legal Notice

The Recipient and all persons and/or entities obtaining an ownership interest in patentable intellectual property must include the following statement within the specification of any United States patent application, and any subsequently issued patent for the invention:

"This invention was made with State of California support under California Energy Commission grant number [insert CEC agreement #]. The Energy Commission has certain rights to this invention."

d. Access to and Preservation of Intellectual Property

1) Access to Intellectual Property

Upon the CAM's request, the Recipient will provide the CAM and any individuals designated by the CEC, with access to the Recipient's intellectual property in order to exercise the license and march-in rights described above.

2) Preservation of Intellectual Property

The Recipient will preserve intellectual property at its own expense for at least three (3) years after payment by the CEC of the Recipient's final invoice.

e. Intellectual Property Indemnity

The Recipient may not, in supplying work under this Agreement, knowingly infringe or misappropriate any intellectual property right of a third party, and will take reasonable actions to avoid infringement.

The Recipient will defend and indemnify the CEC from and against any claim, lawsuit, or other proceeding, loss, cost, liability, or expense (including court costs and reasonable fees of attorneys and other professionals) to the extent arising out of: (i) any third party claim that a product infringes any patent, copyright, trade secret, or other intellectual property right of any third party; or (ii) any third party claim arising out of the negligent or other tortious acts or omissions by the Recipient or its employees, subcontractors, or agents in connection with or related to the products or the Recipient's performance under this Agreement.

21. ROYALTY PAYMENTS TO THE COMMISSION

[Reserved]

22. GENERAL PROVISIONS

a. Governing Law

This Agreement is governed by the laws of the State of California as to interpretation and performance.

b. Independent Capacity

In the performance of this Agreement, the Recipient and its agents, Subrecipients, any lower-tiered level of Sub-Subrecipients, and Vendors, and their respective employees will act in an independent capacity and not as officers, employees, or agents of the CEC or the State of California.

c. Assignment

This Agreement is not assignable or transferable by the Recipient either in whole or in part without the consent of the CEC in the form of an amendment.

d. Timeliness

Time is of the essence in this Agreement.

e. Severability

If any provision of this Agreement is unenforceable or held to be unenforceable, all other provisions of this Agreement will remain in full force and effect.

f. Waiver

No waiver of any breach of this Agreement constitutes waiver of any other breach. All rights and remedies in this Agreement will be taken and construed as cumulative, meaning in addition to every other right or remedy provided in the Agreement or by law.

g. Assurances

The CEC reserves the right to seek further written assurances from the Recipient and its team that the work under this Agreement will be performed in accordance with the terms of the Agreement.

h. Change in Business

1) The Recipient will promptly notify the Energy Commission of the occurrence of any of the following:

   a) A change of address.
   b) A change in business name or ownership.
   c) The existence of any litigation or other legal proceeding affecting the project or Agreement.
   d) The occurrence of any casualty or other loss to project personnel, equipment, or third parties.
   e) Receipt of notice of any claim or potential claim against the Recipient, Subrecipients, any lower-tiered level of Sub-Subrecipients, and Vendors for patent, copyright, trademark, service mark, and/or trade secret infringement that could affect the CEC's rights.

2) The Recipient must provide the CAM with written notice of a planned change or reorganization of the type of business entity under which it does business. A change of business entity or name change requires an amendment assigning or novating the Agreement to the changed entity. If the CEC does not seek to amend this Agreement or enter into a new agreement with the changed or new entity for any reason (including that the CEC is not satisfied that the new entity can perform in the same manner as the Recipient), it may terminate this Agreement as provided in the "Termination" section.

i. Access to Sites and Records

CEC staff and representatives will have reasonable access to all project sites and to all records related to this Agreement.

j. Prior Dealings, Custom, or Trade Usage

These terms and conditions may not be modified or supplemented by prior dealings, custom, or trade usage.

k. Survival of Terms

Certain provisions will survive the completion or termination date of this Agreement for any reason. The provisions include but are not limited to:

- Legal Statements on Products (included in Section 5, “Products”)
- Payment of Funds (Section 8)
- Recordkeeping, Cost Accounting, and Auditing (Section 11)
- Equipment (Section 14)
- Termination (Section 16)
- Indemnification (Section 17)
- Pre-Existing and Independently Funded Intellectual Property (Section 19)
- Intellectual Property (Section 20)
  Royalty Payments to the Commission (Section 21)
- California Taxpayer Access to Publicly Funded Research Act (Section 24)
- Receipt of Confidential Information and Personal Information (Section 26)
- Change in Business (see this section)
- Access to Sites and Records (see this section)
- Venue (see this section)
- CEC as Third-Party Beneficiary (see this section)

l. Venue

Any court action to enforce any part of this Agreement shall be venued in Sacramento County.

m. CEC as Third-Party Beneficiary

The Recipient shall ensure that in all of its agreements with Subrecipients and in all Subrecipient agreements with Sub-Subrecipients (and so forth through every lower-tiered level of Sub-Subrecipients) that the CEC is specifically named as a third-party beneficiary to the agreement. In addition, the term shall state the entity agrees that if the CEC brings a court action, the entity agrees to venue in Sacramento County.

23. CERTIFICATIONS AND COMPLIANCE

a. Federal, State, and Local Laws

The Recipient is responsible for obtaining all required permits and shall comply with all applicable federal, state, and local laws, codes, rules, and regulations for all work performed under the Agreement.

b. Nondiscrimination Statement of Compliance

During the performance of this Agreement, the Recipient, Subrecipients, any lower-tiered level of Sub-Subrecipients, and Vendors shall not unlawfully discriminate, harass, or allow harassment against any employee or applicant for employment because of sex, sexual orientation, race, color, ancestry, religious creed, national origin, physical disability (including HIV and AIDS), mental disability, medical condition, age, marital status, or denial of family care leave. The Recipient, Subrecipients, any lower-tiered level of Sub-Subrecipients, and Vendors will ensure that the evaluation and treatment of their employees and applicants for employment are free from such discrimination and harassment.
The Recipient, Subrecipients, any lower-tiered level of Sub-Subrecipients, and Vendors shall comply with the provisions of the Fair Employment and Housing Act (Government Code Sections 12990 et seq.) and the applicable regulations promulgated thereunder (California Code of Regulations, Title 2, Section 11000 et seq.). The applicable regulations of the Fair Employment and Housing Commission implementing Government Code Section 12990 (a-f), set forth in Chapter 5 of Division 4.1 of Title 2 of the California Code of Regulations, are incorporated into this Agreement by reference and made a part of it as if set forth in full. The Recipient Subrecipients, any lower-tiered level of Sub-Subrecipients, and Vendors shall give written notice of their obligations under this section to labor organizations with which they have a collective bargaining or other Agreement.

The Recipient will include the nondiscrimination and compliance provisions of this section in all agreements with Subrecipients, that perform work under this Agreement.

c. Drug-Free Workplace Certification

By signing this Agreement, the Recipient certifies under penalty of perjury under the laws of the State of California that it will comply with the requirements of the Drug-Free Workplace Act of 1990 (Government Code Section 8350 et seq.).

In addition to any other rights and remedies available to the CEC, failure to comply with these requirements may result in suspension of payments under the Agreement or termination of the Agreement or both, and the Recipient may be ineligible for any future state awards if the CEC determines that any of the following has occurred: (1) the Recipient has made false certification, or (2) violates the certification by failing to carry out the requirements of the Act.

d. National Labor Relations Board Certification (Not applicable to public entities)

The Recipient, by signing this Agreement, swears under penalty of perjury that no more than one final unappealable finding of contempt of court by a federal court has been issued against the Recipient within the immediately preceding two-year period because of the Recipient's failure to comply with an order of a federal court that orders the Recipient to comply with an order of the National Labor Relations Board.

e. Child Support Compliance Act (Applicable to California Employers)

For any agreement in excess of $100,000, the Recipient acknowledges that:

1) It recognizes the importance of child and family support obligations and shall fully comply with all applicable state and federal laws relating to child and family support enforcement, including but not limited to disclosure of information and compliance with earnings assignment orders, as provided in Chapter 8 (commencing with section 5200) of Part 5 of Division 9 of the Family Code; and

2) To the best of its knowledge is fully complying with the earnings assignment orders of all employees and is providing the names of all new employees to the New Hire Registry maintained by the California Employment Development Department.

f. Air or Water Pollution Violation

Under state laws, the Recipient shall not be:

1) In violation of any order or resolution not subject to review promulgated by the State Air Resources Board or an air pollution control district;

2) Subject to a cease-and-desist order not subject to review issued pursuant to Section 13301 of the Water Code for violation of waste discharge requirements or discharge prohibitions; or

3) Finally determined to be in violation of provisions of federal law relating to air or water pollution.

g. Americans With Disabilities Act

By signing this Agreement, the Recipient assures the State that it complies with the Americans with Disabilities Act (ADA) of 1990 (42 U.S.C. Section 12101, et seq.), which prohibits discrimination on the basis of disability, as well as applicable regulations and guidelines issued pursuant to the ADA.

24. CALIFORNIA TAXPAYER ACCESS TO PUBLICLY FUNDED RESEARCH ACT

a. As a condition to receiving funding under this Agreement, the Recipient agrees to fully comply with the California Taxpayer Access to Publicly Funded Research Act (California Government Code sections 13989 et seq., the "Act") and provisions of this section, which apply to publications describing knowledge, an invention, or technology funded within the scope of this Agreement.

b. For purposes of complying with the Act and this section of the Agreement, the following definitions shall apply.

1) "Peer-Reviewed Manuscript" means a manuscript after it has been peer reviewed and in the form in which it has been accepted for publication in a scientific journal.
2) "Research Grant" in the Act and "this Agreement" in this section mean this Agreement.

3) "State Agency" in the Act means the Energy Commission.

c. The Recipient shall provide for free public access to any Peer-Reviewed Manuscript developed within the scope of this Agreement.

d. The Recipient shall ensure that any publishing or copyright agreements concerning Peer-Reviewed Manuscripts:

1) Fully comply with California Government Code section 13989.6;

2) Do not conflict with the Energy Commission's rights under this Agreement;

3) Secure for the Energy Commission the rights provided under this Agreement, including the rights to Intellectual Property as specified in Section 20; and

4) Recognize the free public access to the Peer-Reviewed Manuscript.

e. The Recipient shall report to the CEC the final disposition of any Peer-Reviewed Manuscript, including but not limited to if it was published; when it was published; where it was published; and, when the 12-month time period expires, where the Peer-Reviewed Manuscript will be available for open access.

f. Not later than 12 months after the official date of publication, or sooner if specified in the Schedule of Products, the Recipient shall make available to the CEC an electronic version of any Peer-Reviewed Manuscript that is developed within the scope of this Agreement.

g. The Recipient shall make publicly accessible an electronic version of any Peer-Reviewed Manuscript that is developed within the scope of this Agreement, not later than 12 months after the official date of publication, on a repository approved in writing by the CEC, including but not limited to the University of California's eScholarship Repository at the California Digital Library; the California State University's ScholarWorks at the Systemwide Digital Library; or PubMed Central. The Recipient shall notify the CEC when the Peer-Reviewed Manuscript is available on an CEC-approved repository.

h. If the Recipient is unable to ensure that its Peer-Reviewed Manuscript is accessible on an CEC-approved, publicly accessible repository, the Recipient may comply by providing the manuscript to the CEC not later than 12 months after the official date of publication.

i. For any publications other than a Peer-Reviewed Manuscript, (herein referred to as "Other Publications") including scientific meeting abstracts, developed within the scope of this Agreement, the Recipient shall:

1) Provide an electronic version of the Other Publications to the CEC not later than 12 months after the official date of publication.
2) Ensure that any publishing or copyright agreements concerning Other Publications:

a. Do not conflict with the CEC's rights under this Agreement.

b. Secure for the CEC the rights provided under this Agreement, including the rights to Intellectual Property as specified in Section 20.

j. The Act states that "Grantees are authorized to use grant money for publication costs, including fees charged by a publisher for color and page charges, or fees for digital distribution." Recipient agrees that for purposes of this Agreement, the Recipient is only authorized to use funds under this Agreement, including Matching funds, for these purposes **if the expenses are included in the Agreement's Budget and meet the other Agreement requirements for payment, including that the CEC will only reimburse the Recipient for expenditures incurred during the Agreement term. If these expenses are not included in the Budget, both parties must agree and amend the Budget to include such expenditures before Recipient is authorized to use Agreement funds, either reimbursable expenses or match, for these purposes.**

k. Should a conflict exist between the terms in this Section 24 and other terms of this Agreement, the terms in this section prevail.

25. COMMISSION REMEDIES FOR RECIPIENT'S NON-COMPLIANCE

Without limiting any of its other rights and remedies, the CEC may, for Recipient's noncompliance of any Agreement requirement, withhold future payments, demand and be entitled to repayment of past reimbursements, or suspend or terminate this Agreement. The tasks in the Scope of Work are non-severable, and completion of all of them is material to this Agreement. Thus, the Commission, without limiting its other rights and remedies, is entitled to repayment of all funds paid to Recipient if the Recipient does not timely complete all tasks in the Scope of Work.

If over the course of performing under this Agreement, the CEC and the Recipient agree that a change is warranted to the Scope of Work, the parties can amend this Agreement.

26. RECEIPT OF CONFIDENTIAL INFORMATION AND PERSONAL INFORMATION

a. For the purposes of this Section, "confidential information" refers to information the CEC has designated as confidential pursuant to Title 20 CCR Section 2505 et seq., information the CEC has otherwise deemed or stated to be confidential, and other information exempt from public disclosure under the provisions of the California Public Records Act or other applicable state or federal laws.

b. For the purposes of this Section, "personal information" refers to information that meets the definition of "personal information" in California Civil Code section 1798.3(a) or one of the data elements set forth in California Civil Code section 1798.29(g)(1) or (g)(2). **Personal information is a type of confidential information and is therefore subject to all requirements for confidential information provided in this Agreement and applicable law. However, there are additional requirements specific to personal information.**

c. For the purposes of this Section, "special terms for confidential information" refers to the CEC's special terms and conditions for the receipt of confidential information and personal information. The CEC's special terms for confidential information include, but are not limited to, having in place an Information Security Program Plan and obtaining nondisclosure agreements from all individuals who will be provided access to confidential information or personal information.

d. If the Recipient will receive confidential information or personal information from the CEC or a third-party for the performance of this Agreement, the Recipient must first agree to and comply with the CEC's special terms for confidential information.

e. If any other individual or entity participating in any way with this Agreement, including but not limited to subcontractors, subawardees, vendors, and other project partners, will receive confidential information or personal information from the CEC or a third-party for the performance of this Agreement, that individual or entity must first agree to and comply with the CEC's special

terms for confidential information. The Recipient must flow-down the CEC's special terms for confidential information into each subcontract, subaward, vendor agreement, or other project partner agreement that will be provided access to confidential information or personal information before the individual or entity has access to any such information. Recipient must also require all individuals and entities to flow-down this Section to any lower tier subcontractors, subawardees, vendors, project partners, and other individual or entity participating in any way with this Agreement that will be provided access to Confidential Information or Personal Information before the individual or entity has access to any such information.

f. If this Agreement does not include the CEC's special terms for confidential information and CEC determines the Recipient or any other individual or entity participating in any way with this Agreement will receive confidential information or personal information from the CEC or a third-party for the performance of this Agreement, the CEC reserves the option to amend this Agreement to add its special terms for confidential information.

a. Except as provided in Title 20 CCR Sections 2506, 2507, and 2508, and the CEC's special terms for confidential information, Recipient or any other individual or entity participating in any way with this Agreement may not disclose any information provided to it by the CEC or a third party for the performance of this Agreement if the information has been designated as confidential or is the subject of a pending application for confidential designation.

27. DEFINITIONS

- ***Agreement*** means this grant agreement executed between the CEC and the Recipient.
- ***Agreement Term*** means the length of this Agreement, as specified on the Agreement signature page (form CEC-146).
- ***Budget Categories*** means the following categories in Exhibit B, Budget: Direct Labor, Fringe Benefits, Travel, Equipment, Materials and Miscellaneous, Subrecipients and Vendors, and Indirect Costs and Profit. Budget Category means one of these Budget Categories.
- ***CAM*** means Commission Agreement Manager.
- ***CEC*** means California Energy Commission.
- ***Data*** means any recorded information that relates to the project funded by the Agreement, whether created or collected before or after the Agreement's effective date.

- ***Effective Date*** means the date on which this Agreement is signed by the last party required to sign, provided that signature occurs after the Agreement has been approved by the CEC at a business meeting or by the Executive Director or his/her designee.

- ***Equipment*** means products, objects, machinery, apparatus, implements, or tools that are purchased or constructed with Energy Commission funds for the project, and that have a useful life of at least one year and an acquisition unit cost of at least $5,000. "Equipment" includes products, objects, machinery, apparatus, implements, or tools that are composed by over thirty percent (30%) of materials purchased for the project. For purposes of determining depreciated value of equipment used in the Agreement, the project will terminate at the end of the normal useful life of the equipment purchased and/or developed with CEC funds. The CEC may determine the normal useful life of the equipment.

- ***Incurred Costs*** means an expense for which the Recipient has become liable (legally obligated) to pay.

- ***Intellectual Property*** means: (a) inventions, technologies, designs, drawings, data, software, formulas, compositions, processes, techniques, works of authorship, trademarks, service marks, and logos that are created, conceived, discovered, made, developed, altered, or reduced to practice with Agreement or match funds during or after the Agreement term; (b) any associated proprietary rights to these items, such as patent and copyright; and (c) any upgrades or revisions to these items.

  "Works of authorship" does not include written products created for Agreement reporting and management purposes, such as reports, summaries, lists, letters, agendas, schedules, and invoices.

- ***Invention*** means intellectual property that is patentable.

- ***Match Funds*** means cash or in-kind (i.e., non-cash) contributions provided by the Recipient, Subrecipients, any lower-tiered level of Sub-Subrecipients, Vendors, or a third party for a project funded by the CEC. If this Agreement resulted from a solicitation, refer to the solicitation's discussion of match funding for guidelines specific to the project.

- ***Materials*** means the substances used to construct, or as part of, a finished object, commodity, device, article, or product and that does not meet the definition of Equipment.

- ***MTDC (Modified Total Direct Costs)*** means all direct salaries and wages, applicable fringe benefits, materials and supplies, services, travel, and up to the first $25,000 of which subaward (regardless of the period of performance of the subawards under the award). MTDC excludes equipment, capital expenditures, rental costs, tuition remission, scholarships and fellowships, and the portion of each subaward in excess of $25,000.

- ***Ownership*** means exclusive possession of all rights to property, including the right to use and transfer property.

- ***Paid Costs*** means an expense for which the Recipient has already made payment.

- ***Product*** means any tangible item specified for delivery to the CEC in the Scope of Work.

- ***Project*** means the entire effort undertaken and planned by the Recipient and consisting of the work funded by the CEC. The project may coincide with or extend beyond the Agreement term.

- ***Recipient*** means the entity that executed this Agreement with the CEC.

- ***State*** means the state of California and all California state agencies within it, including but not limited to commissions, boards, offices, and departments.

- ***Subaward*** for the Recipient means all agreements it has with Subrecipients and Vendors. For a Subrecipient, a Subaward means all agreements it has with Sub-Subrecipients and Vendors. For any lower-tiered level of Sub-Subrecipient, a Subaward means all agreements it has with its own Sub-Subrecipients and Vendors.

- ***Subrecipient (formerly Subcontractor)*** means a person or entity that receives grant funds directly from the Recipient and is entrusted by the Recipient to make decisions about how to conduct some of this Agreement's activities. A Subrecipients role involves discretion over grant activities and is not merely just selling goods or services.

- ***Sub-Subrecipient*** has the same meaning as a Subrecipient except that it receives grant funds from a Subrecipient or any lower tier level of a Sub-Subrecipient.

- ***Unrelated Company*** has the meaning set forth in section 7.g. of this Exhibit C.

- ***Vendor*** means a person or entity that sells goods or services to the Recipient, Subrecipient, or any lower-tiered level of Sub-Subrecipient, in exchange for some of the grant funds, and does not make decisions about how to perform the grant's activities. The Vendor's role is ministerial and does not involve discretion over this Agreement's activities.

DocuSign Envelope ID: 55DF5B4F-6586-4461-AF1C-42C9F41CDF73

RESOLUTION NO. 2024-001

RESOLUTION OF THE COORDINATING COMMITTEE OF THE MAGNOLIA POWER PROJECT EXPRESSING INTEREST IN PURSUING THE DEVELOPMENT OF A PROPOSED ADVANCED GAS PATH RESILIENCY UPGRADE PROJECT AND A PROPOSED ADVANCED COMPRESSOR RESILIENCY UPGRADE PROJECT FOR THE MAGNOLIA POWER PROJECT, SUBJECT TO RECEIPT OF GRANT FUNDING

WHEREAS, the Southern California Public Power Authority ("SCPPA" or "the Authority") owns interests in various generation and transmission projects, the output or services of which has been sold to Members of the Authority ("Members"); and

WHEREAS, the Magnolia Power Project ("Project") is a combined-cycle natural gas generating facility located in Burbank, California, planned, developed and constructed by the Authority for the Cities of Anaheim, Burbank, Cerritos, Colton, Glendale and Pasadena (the "Project Participants"), all Members of the Authority; and

WHEREAS, the SCPPA Board of Directors and Project Participants have executed certain Power Sales Agreements that, among other things, established a Project Coordinating Committee (the "Coordinating Committee"); and

WHEREAS, SCPPA and the City of Burbank ("Operating Agent") are parties to that certain Construction Management and Operating Agreement, which appointed the City of Burbank to serve as the Operating Agent for the Project; and

WHEREAS, Operating Agent has applied for a California Energy Commission ("CEC") grant that would provide funding for Distributed Electricity Backup Assets (the "Grant"); and

WHEREAS, the proceeds of the Grant would be used for an Advanced Gas Path Upgrade and an Advanced Compressor Upgrade designed to provide additional power output while increasing the efficiency of the Project's combined cycle system (the "Proposed Scope of Work"); and

WHEREAS, the Operating Agent has received preliminary notice of approval for the Grant, which Grant is subject to final CEC approval and completion of environmental review under the California Environmental Quality Act ("CEQA"); and

WHEREAS, the Coordinating Committee desires to express its interest in the Proposed Scope of Work provided that the Operating Agent shall first receive the Grant and provided further, that environmental approvals for the Project shall have been obtained; and

DocuSign Envelope ID: 55DF5B4F-6586-4461-AF1C-42C9F41CDF73

WHEREAS, commencement of the Proposed Scope of Work shall be subject to formal approval of the Proposed Scope of Work by the applicable governing bodies of the Authority.

NOW, THEREFORE, BE IT RESOLVED by the Coordinating Committee of the Magnolia Power Project as follows:

1. The Coordinating Committee hereby expresses its interest pursuing the Proposed Scope of Work provided that the Operating Agent obtains the Grant and provided further, that all environmental clearances for the Proposed Scope of Work, including under the California Environmental Quality Act, are obtained. Commencement of the Proposed Scope of Work shall be subject to formal approval by the applicable governing bodies of the Authority.

2. This Resolution shall become effective immediately.

THE FOREGOING RESOLUTION is approved and adopted by the Authority this 16th day of May 2024.

DocuSigned by:
Mandip Samra
EB624BA938214F1...

CHAIRPERSON
MANDIP SAMRA
MAGNOLIA COORDINATING
COMMITTEE

STAFF REPORT

POLICE DEPARTMENT

DATE: October 14, 2025

TO: Justin Hess, City Manager

FROM: Rafael Quintero, Chief of Police
BY: Viviana Garzon, Police Administrator

SUBJECT: Adoption of a Resolution Authorizing Acceptance of Funds from the State Citizen's Option for Public Safety Program in the Amount of $323,374.11 and Amending the Fiscal Year 2024-25 Budget by Appropriating Funds

RECOMMENDATION

Adopt A RESOLUTION OF THE COUNCIL OF THE CITY OF BURBANK AUTHORIZING THE CITY MANAGER OR HIS DESIGNEE TO ACCEPT $323,374.11 FROM THE STATE CITIZEN'S OPTION FOR PUBLIC SAFETY (COPS) PROGRAM AND AMENDING THE FISCAL YEAR 2024-25 BUDGET BY APPROPRIATING THE FUNDS. (Attachment 1).

BACKGROUND

In 1996, the California State Legislature enacted Assembly Bill 3229 as part of the state budget package. This bill established the Citizen's Option for Public Safety (COPS) program, which allocates funding to local law enforcement agencies based on population size, to support public safety efforts. For Fiscal Year (FY) 2024-25, the City received $323,374.11 in COPS funds. These funds are designated for frontline police services, including personnel, equipment, and crime prevention/anti-gang programs, and cannot be used to replace the City's existing law enforcement funding. This funding continues to support positions within the Community Resource Officer (CRO) program under the Burbank Police Department's (Department) Community Outreach and Personnel Services Bureau.

DISCUSSION

CROs play a vital role in the Department's outreach and engagement efforts. They

organize various community events, including the annual Community Academy, a program designed to give residents an opportunity to learn about the Department's divisions, operations, and the broader criminal justice system. Over the course of nine weeks, participants are introduced to the Department's community policing philosophy, internal policies, and the ethical and legal principles guiding police services within the community. Additionally, CROs participate in speaking engagements at community organizations, assist with public service announcements alongside the City's Public Information Officer or through the Department's website, and enhance the Department's social media presence.

CROs further support community events such as National Night Out, Coffee with a Cop, Take a Scoop Out of Crime, and the Shop with a Cop holiday event. They also help manage the Department's volunteer program, as well as the Burbank Police Explorer and Police Cadet programs.

ENVIRONMENTAL REVIEW

Approval of the COPS program allocation has no potential to result in either a direct physical change in the environment, or a reasonably foreseeable indirect physical change in the environment, and as such, is not a "project" subject to the requirements of the California Environmental Quality Act (CEQA) 14 Cal. Code Regs § 15378.

FISCAL IMPACT

Adoption of the proposed resolution allows the City to appropriate funds awarded to it by the State. These funds cover approximately 72% of the costs for the Community Resource Officer positions. COPS funds are appropriated after the close of each FY to ensure all expenses and revenues are accounted for prior to finalizing the appropriation. Staff recommends that Council approve an amendment to the FY 2024-25 Adopted Budget to accept funds from the COPS program and appropriate $323,374.11 from revenue account 121.PD000.48010.1039 (General City Grants, PD General, Other Intergovernmental Revenues, State AB3229 COPS) to expenditure account 121.PD91A.60004.0000.000000 (General City Grants, Grants - COPS, State Grant - Salaries).

CONCLUSION

These funds have been awarded to the City from the State of California to support law enforcement services. By supporting the CRO program, the COPS program ensures the continued growth of community-centered policing, reinforcing the relationship between the Department and the Burbank community.

ATTACHMENT

Attachment 1 – Resolution

RESOLUTION NO. _____

A RESOLUTION OF THE COUNCIL OF THE CITY OF BURBANK AUTHORIZING THE CITY MANAGER OR HIS DESIGNEE TO ACCEPT $323,374.11 FROM THE STATE CITIZEN'S OPTION FOR PUBLIC SAFETY (COPS) PROGRAM AND AMENDING THE FISCAL YEAR 2024-25 BUDGET BY APPROPRIATING THE FUNDS

THE COUNCIL OF THE CITY OF BURBANK FINDS:

A. The State Citizen's Option for Public Safety (COPS) program provides funding to local law enforcement agencies, based on population size, for the purpose of ensuring public safety.

B. The Burbank Police Department has received funding through the State Citizen's Option for Public Safety (COPS) program in the amount of $323,374.11 for fiscal year 2024-25.

C. Program funds assist in funding the Police Department's Community Resource Officer positions. Community Resource Officers provide front-line police services to the community through the facilitation of a variety of community events, outreach programs, and services.

D. COPS funds are appropriated after the close of each FY to ensure all expenses and revenues are accounted for prior to finalizing the appropriation.

THE COUNCIL OF THE CITY OF BURBANK RESOLVES:

1. The above findings are true and correct, and incorporated herein as if restated in their entirety.

2. The City Manager, or his designee, is hereby authorized to accept $323,374.11 in funds from the State Citizen's Option for Public Safety (COPS) program.

3. The City's Fiscal Year 2024-25 Annual Budget is amended to appropriate $323,374.11 in State Citizen's Option for Public Safety (COPS) funds from revenue account 121.PD000.48010.1039.000000.00000 (General City Grants, PD General, Other Intergovernmental Revenues, State AB3229 COPS) to expenditure account 121.PD91A.60004.0000.000000 (General City Grants, Grants – COPS, State Grant – Salaries).

4. The Financial Services Director, or designee, is authorized to make such revisions, changes in summaries, fund amounts, totals, and other portions of the budget document as necessary to reflect and implement the appropriations specified in this resolution.

5. The City Manager, or his designee, is authorized to execute all necessary documents, or amendments to effectuate the receipt of the COPS grant funding.

PASSED and ADOPTED this ____ day of October, 2025.

_____
Nikki Perez
Mayor

Approved as to Form:
Office of the City Attorney

Attest:

_____
Kimberley Clark, City Clerk

By: _____
Ray Johal
Senior Assistant City Attorney

STATE OF CALIFORNIA)
COUNTY OF LOS ANGELES) ss.
CITY OF BURBANK)

I, Kimberley Clark, City Clerk of the City of Burbank, do hereby certify that the foregoing Resolution was duly and regularly passed and adopted by a vote of the Council of the City of Burbank at its regular meeting held on the ___ day of October 2025, by the following vote:

AYES:

NOES:

ABSENT:

_____
Kimberley Clark, City Clerk

STAFF REPORT

LIBRARY SERVICES

DATE: October 14, 2025

TO: Justin Hess, City Manager

FROM: Eric Lashley, Library Services Director
BY: Cindy Yee Akuin, Senior Administrative Analyst

SUBJECT: Adoption of a Resolution Authorizing the City Manager to Approve Workforce Innovation and Opportunity Act Program Agreements with the Verdugo Consortium and the City of Glendale

---

RECOMMENDATION

Adopt A RESOLUTION OF THE COUNCIL OF THE CITY OF BURBANK AUTHORIZING THE CITY MANAGER TO APPROVE WORKFORCE INNOVATION AND OPPORTUNITY ACT PROGRAM AGREEMENTS WITH THE VERDUGO CONSORTIUM AND THE CITY OF GLENDALE

BACKGROUND

The Verdugo Consortium is a joint powers authority (VCJPA) created in 1999 to implement economic, labor market, and business community programs within a certain Workforce Investment Area. VCJPA consists of three members – the cities of Burbank (City), Glendale, and La Cañada Flintridge. VCJPA administers funding for certain programs, including those funded by the Workforce Innovation and Opportunity Act (WIOA Program) and by the State of California. The Verdugo Workforce Development Board (VWDB) is the planning body for the Consortium. Its purpose is to provide employment training programs within the three cities and to allocate and award WIOA Program funds towards its goals. As an administrative entity for the Verdugo Consortium, the Glendale City Council, on behalf of the City of Glendale, approves all contracts and funding award recommendations by the VWDB and acts as VCJPA's program administrator for such funds.

The Job Connect program is operated at the Burbank Public Library as an affiliate site to the Verdugo Jobs Center (VJC). Since 2021, Job Connect has been providing general

WIOA employment services to the public, including job preparation training, job exploration, workplace readiness skills training, and on-the-job training. The City generally receives annual WIOA Program funding of $130,000 to $145,500 for the Job Connect program.

DISCUSSION

The City has received an agreement from Glendale titled Workforce Innovation and Opportunity Act Title I For Adult, Dislocated Worker & Rapid Response Services, Program Year 2025-26 (Agreement). The Agreement establishes the City as a Contractor and outline's the City's obligations to remain in compliance with the agreement and receive $145,000 in funding under the WIOA Program for Fiscal Year (FY) 2025-26. The City's obligations under the Agreement include items such as program outcomes, reporting requirements, and annual fiscal monitoring.

Staff recommends establishing clear authority to streamline the process for approving these types of VCJPA funding agreements, which are generally annual, reoccurring, and benefit the City. While there has been no established authority for whom can execute the Agreement specifically addressed through the municipal code, ordinance, or resolution, Staff find that this Council resolution will serve as a clear record in determining the appropriate level of signing authority for such Agreements. Staff recommends that the City Manager or designee administratively approve and execute the current and all future agreements with VCJPA (or with Glendale as VCJPA's program administrator) provided: (1) the agreement is approved by the City Attorney's Office; and (2) the agreement is either fully funded by VCJPA or requires no further additional approval of funding from the City. A copy of the Fiscal Year 2025-26 Agreement, which has been reviewed by the City Attorney's Office, is attached.

ENVIRONMENTAL REVIEW

This activity involves governmental funding and fiscal activities that have no potential for resulting in either a direct physical change in the environment, nor a reasonably foreseeable indirect physical change in the environment. As such, approval of this resolution is not a "project" subject to the requirements of the California Environmental Quality Act (CEQA) 14 Cal. Code Regs § 15378.

FISCAL IMPACT

There is no fiscal impact for delegating authority to the City Manager or designee to approve and execute agreements with VJCPA and the City of Glendale. The Revenue funds are included in the annual budget process and has been approved and appropriated in the FY 2025-26 Adopted Budget.

CONCLUSION

Staff recommends delegating authority by resolution to the City Manager or designee to

administratively approve the agreements for programs funded by the VCJPA (as administered by Glendale), subject to certain limitations to establish clear authority and to streamline the annual contractual process.

ATTACHMENTS

Attachment 1 – Resolution
Attachment 2 – Agreement

ATTACHMENT 1

RESOLUTION NO. _____

A RESOLUTION OF THE COUNCIL OF THE CITY OF BURBANK AUTHORIZING THE CITY MANAGER TO APPROVE WORKFORCE INNOVATION AND OPPORTUNITY ACT PROGRAM AGREEMENTS WITH THE VERDUGO CONSORTIUM AND THE CITY OF GLENDALE

THE COUNCIL OF THE CITY OF BURBANK FINDS AS FOLLOWS:

A. The Verdugo Consortium is a joint powers authority (VCJPA) created in 1999 to implement economic, labor market, and business community programs within a certain Workforce Investment Area.

B. VCJPA consists of three members – the cities of Burbank (City), Glendale, and La Canada Flintridge. (See Resolution No. 25,663.)

C. VCJPA administers funding for certain programs, including those funded by the Workforce Innovation and Opportunity Act and by the State of California. (WIOA Program.) Glendale acts as VCJPA's program administrator for such funds.

D. The City has received an agreement from Glendale titled Workforce Innovation and Opportunity Act Title I For Adult, Dislocated Worker & Rapid Response Services, Program Year 2025-26 (Agreement). The Agreement establishes the City's obligations before the City can receive funds for adult, dislocated worker, and rapid response services under the WIOA Program, for the fiscal year 2025-2026.

E. Because these types of VCJPA funding agreements are generally annual, reoccurring, and benefit the City, the City desires to streamline the approval process and permit the City to administratively approve the agreements for programs funded by the VCJPA (as administered by Glendale), subject to certain limitations.

THE COUNCIL OF THE CITY OF BURBANK RESOLVES AS FOLLOWS:

1. Approval of Agreement. The Agreement is approved and the City Manager or designee is authorized to execute the Agreement.

2. Authorization to Approve Future VCJPA Agreements. The City Manager or their designee is authorized to approve and execute all future agreements with VCJPA (or with Glendale as VCJPA's program administrator) without further City Council approval, provided: (1) the agreement is approved by the City Attorney's Office; and (2) the agreement is either fully funded by VCJPA or requires no further additional approval of funding from the City.

ATTACHMENT 1

PASSED and ADOPTED this ____day of _____, 2025.

_____
Nikki Perez
Mayor

Attest:

Approved as to Form:
Office of the City Attorney

_____
Kimberley Clark, City Clerk

By: _____
Kane Thuyen
Senior Assistant City Attorney

STATE OF CALIFORNIA)
COUNTY OF LOS ANGELES) ss.
CITY OF BURBANK)

I, Kimberley Clark, City Clerk of the City of Burbank, do hereby certify that the foregoing Resolution was duly and regularly passed and adopted by the Council of the City of Burbank at its regular meeting held on the ____ day of _____ 2025, by the following vote:

AYES:

NOES:

ABSENT:

_____
Kimberley Clark, City Clerk

ATTACHMENT 2

Contract Between
The City of Glendale/Verdugo Consortium
and
The City of Burbank
Funded and Governed by the
Workforce Innovation and Opportunity Act, Title I
For Adult, Dislocated Worker & Rapid Response Services
Program Year 2025-26

Signature Sheet

CITY
Community Services and Parks Department
Verdugo Workforce Development Administration
1255 S. Central Ave.
Glendale, CA. 91204
(818) 548-2053

Agent: Roubik Golanian

Contractor
City of Burbank
275 E. Olive Ave.
Burbank, CA 91510
(818) 238-5030

Agent: Justin Hess

Statement of Purpose: The attached Agreement titled "Workforce Innovation and Opportunity Act Title I For Adult, Dislocated Worker & Rapid Response Services, Program Year 2025-26," by and between the CITY OF GLENDALE, a municipal corporation, operating in its capacity as the contract and program administrator for the Verdugo Consortium (SAM HF16K5BFKGY5), a Joint Powers Authority of which it is a part ("**CITY**"), and the CITY OF BURBANK, (SAM N9Q5C7NS3JS5), a municipal corporation "**CONTRACTOR"**), is for the purpose of providing employment training and services in accordance with the Workforce Innovation and Opportunity Act of 2014, Public Law 113-128 ("**WIOA**"), and all Federal, State and local laws, regulations and policies promulgated thereby.

Primary Understanding: It is expressly understood by the parties to the Agreement that CITY has received from the Employment Development Department of the State of California ("**STATE**") the award of a WIOA Title I grant to fund services provided under the Agreement. The Assistance Listing Number ("ALN") for this funding is 17.258 for WIOA Adult, 17.278 for WIOA Dislocated Worker ("**DW**"), and 17.278 for WIOA Rapid Response. Until such funds are made available to CITY by STATE, CITY and the CONTRACTOR agree that CITY is not obligated to allocate any funds to CONTRACTOR, and CONTRACTOR is not obligated to perform any services promised under the Agreement. In the event that WIOA funds are not granted to CITY for the aforesaid purpose, CITY is not obligated to pay CONTRACTOR for any past or future performance(s) rendered. The terms and conditions set forth in the Agreement, along with all Attachments thereto—including this Signature Sheet—are fully incorporated therein by reference.

Contract Period: The Agreement is effective as of July 1, 2025, and will terminate on June 30, 2026.

City Financial Obligations: The Agreement establishes CITY's obligation for each WIOA program as follows:

Funding Source	Amount	Assistance Listing Number (ALN)
WIOA Adult	$ 48,500	17.258
WIOA Dislocated Worker	$ 48,500	17.278
WIOA Rapid Response	$ 48,500	17.278
Total	**$145,500**	

Approved for the City of Glendale By:

Roubik Golanian City Manager
Name Title

Signature Date

Approved for the City of Burbank By:

Justin Hess City Manager
Name Title

Signature Date

CITY OF GLENDALE: APPROVED AS TO FORM
NAME: _____ TITLE: _____ SIGNATURE: _____ DATE: _____

CITY OF BURBANK: APPROVED AS TO FORM
NAME: _____ TITLE: _____ SIGNATURE: _____ DATE: _____

Agreement Between
The City of Glendale/Verdugo Consortium
and
The City of Burbank

Funded and Governed by
The Workforce Innovation and Opportunity Act, Title I
For Adult, Dislocated Worker & Rapid Response Services
Program Year 2025-26

This Agreement (this "**Agreement**"), effective _____("**Effective Date**"), is between the CITY OF GLENDALE, a municipal corporation operating in its capacity as the contract and program administrator of the Verdugo Consortium, a Joint Powers Authority of which it is a part ("**CITY**"), and the CITY OF BURBANK, a municipal corporation ("**CONTRACTOR**"). CITY and CONTRACTOR are sometimes collectively referred to in this Agreement as the "PARTIES" or individually as a "PARTY." Services under this Agreement are provided pursuant to Title I of the Workforce Innovation and Opportunity Act of 2014, Public Law 113-128 ("**WIOA**").

RECITALS

A. CITY has entered into a Joint Powers Agreement with the cities of Burbank and La Cañada Flintridge to form the Verdugo Consortium (the "**Consortium**"). The purpose of the Consortium is to consolidate economic, labor market, and business community resources and function as a local Workforce Development Area under WIOA to develop the local workforce and economy, through providing employment and training programs.

B. CITY is the administrator of all Consortium activities on behalf of the Consortium under the policy direction of the Verdugo Workforce Development Board ("**VWDB**"). The City Manager of Glendale possesses the authority to execute all contracts necessary to carry out the purpose of this Agreement.

C. CITY has entered into a subgrant agreement with the State Employment Development Department (hereafter referred to as the "**STATE**") for the purpose of providing employment and training services to eligible adult participants within the Verdugo Workforce Development Area.

D. CITY desires to engage CONTRACTOR subject to the terms of this Agreement.

E. CONTRACTOR is qualified and capable of rendering the services under this Agreement in compliance with standards required by STATE and CITY.

AGREEMENT

NOW THEREFORE, in consideration of the mutual promises contained in this Agreement and these recitals, the sufficiency of which the PARTIES acknowledge, CITY and CONTRACTOR agree as follows:

ARTICLE I
TERM

1.1 This Agreement's Term is twelve (12) months beginning on the Effective Date and ending on June 30, 2026 (the "**Term**"), or until it has been terminated by

either PARTY, as specified in Article III of the *Verdugo Workforce Development Administration Assurances, Certifications, and Agreements*, attached as **Attachment A** and incorporated into this Agreement by this reference.

ARTICLE II
COST REIMBURSEMENT

2.1 Payments made by CITY to CONTRACTOR under this Agreement shall be in the form of cost reimbursement payments. CONTRACTOR shall identify and allocate the work it performs under this Agreement among pre-defined cost categories agreed upon by CITY and CONTRACTOR. CITY shall only make cost reimbursement payments for work performed under this Agreement that has been properly allocated among the agreed upon cost categories.

ARTICLE III
DEFINITIONS

3.1 "**Basic Career Services**"[1] includes the following, which must be made available to all individuals seeking services served in the VWDB One-Stop delivery system:

A. Determinations of whether the individual is eligible to receive assistance from the adult, dislocated worker, or youth programs;

B. Outreach, intake, and orientation to information and other services available through the VWDB One-Stop delivery system;

C. Initial assessment of skill levels including literacy, numeracy, and English language proficiency, as well as aptitudes, abilities (including skills gaps), and supportive service needs;

D. Labor exchange services, including—

1. Job search and placement assistance, and, when needed by an individual, career counseling, including: (a) Provision of information on in-demand industry sectors and occupations (as defined in WIOA § 3(23)); and, (b) Provision of information on nontraditional employment (as defined in WIOA § 3(37); and information from career profiles and investment inventories;

E. Provision of referrals to and coordination of activities with other programs and services, including those within the One-Stop delivery system and, when appropriate, other VWDB programs;

F. Provision of workforce and labor market employment statistics information, including the provision of accurate information relating to local, regional, and national labor market areas, including:

1. Job vacancy listings in labor market areas;

2. Information on job skills necessary to obtain the vacant jobs listed; and

[1] *See* TEGL 19-16 and TEGL 16-16

3. Information relating to local occupations in demand and the earnings, skill requirements, and opportunities for advancement for those jobs;

G. Provision of performance information and program cost information on eligible providers of training services by program and type of providers and workforce services by program and type of providers;

H. Provision of information about how the local area is performing on local performance accountability measures, as well as any additional performance information relating to the area's One-Stop delivery system;

I. Provision of information relating to the availability of supportive services or assistance, and appropriate referrals to those services and assistance, including: child care; child support; medical or child health assistance available through the State's Medicaid program and Children's Health Insurance Program; benefits under the Supplemental Nutrition Assistance Program; assistance through the earned income tax credit; housing counseling and assistance services sponsored through the U.S. Department of Housing and Urban Development; and assistance under a State program for Temporary Assistance for Needy Families; and other supportive services and transportation provided through that program;

J. Assistance in establishing eligibility for programs of financial aid assistance for training and education programs not provided under WIOA; and

K. Provision of information and assistance regarding filing claims under Unemployment Insurance ("**UI**") programs, including meaningful assistance to individuals seeking assistance in filing a claim;

1. "**Meaningful assistance**" means providing assistance as follows:

(a) On-site using staff who are properly trained in UI claims, filing, and/or the acceptance of information necessary to file a claim, or

(b) By phone or via other technology, as long as the assistance is provided by trained and available staff and within a reasonable time. If an individual is referred to a telephone for UI claims assistance, it must be a phone line dedicated to serving one-stop customers in a timely manner. Individuals must not simply be referred to a general information/dial-in line with the state UI agency contact center where the individual is placed into a phone queue along with all other claimants in the State. If the assistance is provided remotely using technology, it must be a technology that enables trained staff to provide the assistance. Examples of technology that enables remote assistance include live Web chat applications, video conference applications, or other similar technology; and

(c) The costs associated in providing meaningful assistance may be paid for by the State's UI program, the WIOA Adult or Dislocated

Worker programs, the Wagner-Peyser Employment Service, or some combination thereof these funding sources.

3.2 "**Rapid Response Services**" encompasses the strategies and activities necessary to plan for and respond as quickly as possible following an announcement of a closure or layoff or natural or other disaster which results in mass job loss. Rapid Response activities are described at 20 CFR 682 Subpart C of the WIOA regulations (covering 20 CFR 682.300 through 682.370) and are further discussed in TEGL 19-16. Rapid Response delivers services to enable dislocated workers to transition to new employment as quickly as possible. It includes services to employers and employees who are experiencing a permanent plant closure, and/or mass layoffs that result in mass job dislocation of employees. Services can include assisting with reemployment, making on-site visits to employers and employee representatives, and providing information and access to available employment and training activities.

3.3 "**Adult**" and "**Dislocated Worker**" is an individual who must:

A. Be 18 years of age or older;

B. Be a citizen or noncitizen authorized to work in the US; and

C. Meet Military Selective Service registration requirements (males only).

D. As required under WIOA Section 134(c)(3)(E) [Priority of Service - WIOA Adult participants], with respect to individualized career and training services funded with WIOA adult funds, priority of service must be given to recipients of public assistance, other low-income individuals, individuals who are basic skills deficient, and other individuals in accordance with the VWDB's Priority of Service Policy. Priority does not apply to the dislocated worker population. Veterans and eligible spouses continue to receive priority of service among all eligible individuals; however, they must meet the WIOA adult program eligibility criteria and meet the criteria under WIOA Section 134(c)(3)(E).

3.4 "**Dislocated Worker**" means an individual who meets one of the following five criteria (A-E). The individual:

A. 1. Has been terminated or laid off, or has received a notice of termination or layoff, from employment; ***and***

2. (a) Is eligible for or has exhausted unemployment compensation; ***or***

(b) Has been employed for a duration sufficient to demonstrate attachment to the workforce, but is not eligible for unemployment compensation due to insufficient earnings or having performed services for an employer that were not covered under a State unemployment compensation law; ***and***

3. Is unlikely to return to a previous industry or occupation;

B. 1. Has been terminated or laid off, or has received notification of termination or layoff, from employment as a result of a permanent closure of, or any substantial layoff at, a plant, facility, or enterprise;

2. Is employed at a facility at which the employer has made the general announcement that such facility will close within 180 days; ***or***

3. For purposes of eligibility to receive services other than training services described in WIOA Section 134(c)(3), career services described in WIOA Section 134(c)(2)(A)(xii), or supportive services, is employed at a facility at which the employer has made a general announcement that such facility will close;

C. Was self-employed (including employment as a farmer, a rancher, or a fisherman) but is unemployed as a result of general economic conditions in the community in which the individual resides or because of natural disasters;

D. Is a displaced homemaker (as defined in paragraph (16) of section 3102 of title 29, United States Code); ***or***

E. 1. Is the spouse of a member of the Armed Forces on active duty (as defined in section 101(d)(1) of title 10, United States Code), and who has experienced a loss of employment as a direct result of relocation to accommodate a permanent change in duty station of such member; ***or***

2. Is the spouse of a member of the Armed Forces on active duty and who meets the criteria described in paragraph (16)(B) of section 3102 of title 29, United States Code.

3.5 "**CalJOBS**" refers to the CalJOBS[SM] system, California's online resource to help job seekers and employers navigate the state's workforce services. The enhanced system allows users to easily search for jobs, build résumés, access career resources, find qualified candidates for employment, and gather information on education and training programs.

3.6 "**Case Notes**" refers to the services provided to a client that must be documented in CalJOBS via Case Activities. Services must always be supported by a case note that clearly and completely describes the event/activity being documented so that it may be understood by anyone reviewing the note. Case notes should be concise, clear, spelled properly, and grammatically correct.

ARTICLE IV
STATEMENT OF WORK AND SERVICES TO BE PROVIDED

4.1 General Responsibilities and Obligations of CONTRACTOR
CONTRACTOR shall provide the following services:

A. Basic Career Services

CONTRACTOR shall provide individuals with Basic Career Services to 100 VWDB customers at VWDB One-Stop delivery sites, including the Burbank Job Connect ("**Job Connect**") Annex of the Verdugo Jobs Center ("**VJC**"). These services include but are not limited to:

1. Outreach
2. Providing Labor Market Information
3. Providing Job Listings
4. Providing Training Information

5. Assisting with completing job applications, applying for jobs, and reviewing resumes
6. Referrals to VJC that results in enrollments in either Job Search or Training
7. Providing referrals to Partner Services

B. Services and Equipment

CONTRACTOR must provide use of the following services and equipment for job seeking purposes at the Job Connect facility:

1. Computers with access to the internet;
2. Computers for typing tutorials;
3. Telephones and fax machines [including a TDD system];
4. At least one photocopier;
5. A resource library; and
6. Job postings.

C. Referrals.

CONTRACTOR must refer customer to other AJCC partner agencies for requested services.

CONTRACTOR must refer at a minimum 60 customers to the VJC that will result in a meaningful activity, such as Job Placement Services or Training. The referrals must be qualified for WIOA Priority of Service, which is those who are English Language Learners or individuals receiving public assistance.

D. Register Clients in CalJOBS

CONTRACTOR must enroll customers being referred to the VJC in CalJOBS identified in Section 4.1 A and C.

CONTRACTOR must check in each customer through the virtual check in system, VOS, in CalJOBS before meeting and registering the customer.

E. VJC Program Coordination

CONTRACTOR shall coordinate the following activities with the VJC:

1. Attend required VJC Memorandum of Understanding (MOU) Partner meetings as organized by the VWDB's One Stop Operator.
2. Market itself and the VJC as members of the America's Job Centers of California system on all marketing literature distributed in the community by name, phone and address.
3. Coordinate activities related to workforce related workshops and/or business services activities with VJC.

4. Provide and/or coordinate with the VJC listings of new job openings, job fairs, and other activities that lead to possible jobs for clients monthly.

5. Coordinate recruitments, job fairs, or other employment events being held at Job Connect with VJC.

6. Alert the VJC of any new businesses identified by Job Connect in Burbank monthly.

7. Alert the VJC of any businesses identified that are laying off in Burbank promptly.

8. Refer clients and businesses to the VJC for additional services through an agreed upon referral process.

F. Business Services

CONTRACTOR shall provide business services to at least 12 employers at the Job Connect by doing business outreach to Burbank businesses as follows:

1. Job postings and/or recruitments for businesses.

2. Outreach to new businesses for hiring needs.

3. Enter a minimum of 12 Business Outreach efforts in CalJOBS/Customer Relationship Module (CRM) module as Marketing Lead/Business Engagement.

G. Rapid Response Services

CONTRACTOR shall provide Rapid Response Services to employers as follows:

1. CONTRACTOR shall identify a minimum of 12 businesses for layoff aversion and/or Rapid Response Services.

2. CONTRACTOR shall attend 75% of all Rapid Response Services meetings with affected Burbank employers scheduled by the VJC's Rapid Response Unit.

3. CONTRACTOR shall provide information and referrals to employees affected by layoffs through meetings referred to in subsection 4.1 above, and to walk-in customers of the Job Connect facility.

4. CONTRACTOR shall track and refer to VJC persons who visit the Job Connect facility in response to any Rapid Response Services outreach effort through CalJOBS and/or new referral process.

5. CONTRACTOR shall assist CITY in contacting businesses identified by VJC for Rapid Response Services.

4.2 Program Personnel

CONTRACTOR shall provide the services promised under this Agreement and employ all personnel charged to the program *Budget*, attached as **Attachment B** to this Agreement and incorporated into it by this reference.

4.3 Affiliate AJCC Certification

A. CONTRACTOR shall comply with the Affiliate AJCC Certification process in accordance with all requirements contained in the Workforce Services Directive (WSD) 20-08: AJCC Comprehensive and Affiliate/Specialized Certification Directive, a copy of which is attached hereto as **Attachment H** and incorporated herein by this reference.

4.4 Program Outcomes

A. CONTRACTOR shall provide program services promised under this Agreement to an average of 100 customers each year. These customers shall be registered in CalJOBS, per subsection 4.1.A and D.

B. CONTRACTOR shall refer 60 priority of service customers for Job Placement or Job Training to VJC.

C. CONTRACTOR shall provide a list of all coordination efforts provided per section 4.1 E.

D. CONTRACTOR shall attend 75% of all Rapid Response meetings.

E. CONTRACTOR shall provide names and contact information of customers they've identified/served for Rapid Response services.

C. CONTRACTOR shall identify at a minimum, 12 businesses for lay off aversion and/or Rapid Response Services.

D. CONTRACTOR shall register at a minimum, 12 new businesses in CalJOBS/CRM system who are hiring or a new business.

E. Documentation of individual performance shall be recorded and retained on file at CONTRACTOR'S offices and in CalJOBS, if applicable.

4.5 Reporting Requirements

A. CONTRACTOR must maintain standardized records and supporting documentation for all participants. CONTRACTOR must also maintain all records pertinent to this Agreement, including but not limited to financial, statistical, and property records.

B. CONTRACTOR must submit program reporting quarterly, as specified in Section 6.4(A). CITY reserves the right to change, alter, or amend any reporting requirements that may become necessary under this Agreement.

4.7 Continuity of Services During Emergency and Disaster Events

CONTRACTOR shall continue services during emergency and disaster events in accordance with the VWDB's *Workforce Services Continuity Policy* (**Attachment G**).

4.8 Inability to Perform Contract Services Due to Emergency and Disaster Events

A. In the event that performing the services specified in this contract, which includes meeting the program outcomes specified in Section 4.4, is not possible or practical as a result of emergency and disaster events, CONTRACTOR shall submit a written report to the CITY no later than one (1) month after said emergency or disaster event specifying program outcomes achieved to date and challenges in performing contract services, a corrective plan of action, and/or a request to CITY. The corrective plan of action shall detail how CONTRACTOR will achieve program outcomes by the end of the contract term.

The request to CITY may be inclusive of but not limited to extension of contract term, and modification of program outcomes.

B. CITY will review the report and notify CONTRACTOR of its decision to approve or deny request(s) within 10 days of receipt. Not all requests may be granted.

ARTICLE V
AUDIT AND MONITORING BY CITY

5.1 CONTRACTOR shall permit CITY or any authorized representatives of CITY, at all reasonable times, access to and the right to examine all records, books, papers or documents related to CONTRACTOR's performance under this Agreement including, but not limited to, expenses for consultants, agents or assistants, direct or indirect charges for work performed and detailed documentation for all such work performed or to be performed under this Agreement.

5.2 CITY will conduct at least one program monitoring during the course of the program. At that time, CONTRACTOR shall provide CITY's monitor with a copy of CONTRACTOR's own *Policy and Procedure Regarding Incident Reporting, including Fraud and Abuse*, as outlined in **Attachment C**, *Verdugo Workforce Development Administration Policy and Procedure Regarding Incident Reporting, Including Incidents of Fraud, Abuse and Waste*, which is attached to this Agreement and incorporated into it by this reference. To audit services and equipment, CITY's monitor will utilize **Attachment D**, *Integrated Service Delivery Monitoring Tool Burbank*, which is attached to this Agreement and incorporated into it by this reference.

ARTICLE VI
PAYMENT AND DELIVERY

6.1 Method of Payment

Payment to the CONTRACTOR for services rendered under this agreement shall be made on a cost reimbursement basis, according to the *Budget* (Exhibit B).

6.2 Maximum Amount Payable

A. The total of all payments to the CONTRACTOR under this Agreement shall not exceed $145,500, which is broken down by category as follows:

Funding Source	Award Amount
WIOA Title I Adult	$48,500
WIOA Title I Dislocated Worker	$48,500
WIOA Title I Rapid Response	$48,500
Total	$145,500

B. Any expenses CONTRACTOR incurs that exceeds the above limits are the sole responsibility of the CONTRACTOR. In no event shall CITY be responsible or liable to reimburse CONTRACTOR for expenses incurred in excess of the above limits. This binding limit on total award amounts may

only be increased by execution of a written, signed, bilateral Agreement modification, as described in the *Verdugo Workforce Development Administration Assurances, Certifications, and Agreements*.

6.3 Allowable Expenditures

Reimbursements shall be within the limits of the *Budget*. No reimbursement shall be made that exceeds the allowable expense in each category or line item. All allowable expenditures must be made by June 30, 2026. Any expenditure made after June 30, 2026, will not be reimbursed. All activities for which reimbursement is requested must be allowable under the terms of this Agreement and must comply with federal, State, and local requirements, policies and procedures.

6.4 Invoices and Payment

Failure to comply with any record keeping or reporting requirements may be grounds for the CITY to withhold payment against submitted invoices until such compliance is demonstrated. All requests for payment must be supported by sufficient documentation to justify that the expense is allowable for payment. Reimbursement requests must be accurate and complete and must be in the form required by the CITY. The amount eligible for reimbursement shall be paid upon delivery of an invoice supported with proper documentation of all actual program costs.

A. Quarterly Invoice

CONTRACTOR shall submit original invoices not more frequently than once per quarter. Original invoices shall be submitted with the *Quarterly Reporting Tool* included as **Attachment F**, and the supplemental documentation specified therein.

B. Final Invoice

By June 30, 2026, CONTRACTOR shall submit to the CITY an original, itemized, complete and accurate final invoice including all required supporting documentation for allowable expenditures within the contract period. Failure to comply with any record keeping or reporting requirements may be grounds for the CITY to withhold payment against the final invoice until such compliance is demonstrated.

C. In the event CONTRACTOR does not submit a final invoice by June 30, 2026, CITY reserves the right to unilaterally close-out this Agreement and, in its sole discretion, may (but is not required to) use the invoice then on file at the CITY for determination of CONTRACTOR's final allowable expenditures. CITY will not reimburse the CONTRACTOR for expenditures reported after June 30, 2026.

D. CONTRACTOR must submit invoices no more than quarterly intervals, only after completion of one or more of the tasks or phases following Quarter of Grant Activities Deadline Chart below, which outlines the start and end dates of each quarter, along with each quarter's invoice submission due date. If the due date falls on a Saturday, Sunday or a holiday, the invoice is due the next day that City is open for business, per schedule below:

Quarter of Grant Activities	Due Date
Q1: July 1, 2025-September 30, 2025	October 15, 2025
Q2: October 1, 2025-December 31, 2025	January 15, 2026
Q3: January 1, 2026- March 31, 2026	April 15, 2026
Q4: April 1, 2026-June 30, 2026	July 15, 2026

E. CONTRACTOR shall submit Invoices through the CITY'S online Vendor Invoice Submittal Portal: https://www.glendaleca.gov/government/departments/finance/accounting/invoice-submittal

ARTICLE VII
COMPLIANCE

7.1 CONTRACTOR shall provide the specific services listed in this Agreement to eligible participants in accordance with the Act, and all applicable federal, state, and local laws, regulations, and policies pertaining to the Act. CONTRACTOR shall comply with all applicable policies, procedures, and program requirements of the Verdugo Consortium Workforce Development Administration.

7.2 CONTRACTOR shall provide all services in accord with all of the terms of this Agreement, including terms within the *Signature Sheet* and the following Attachments: **Attachment A** (*Assurances, Certifications and Agreements*); **Attachment B** (*Budget*); **Attachment C** (*Policy and Procedures Regarding Incident Reporting, Including Incidents of Fraud, Abuse and Waste*); **Attachment D** (*Integrated Service Delivery Monitoring Tool Burbank*); **Attachment E** (*Insurance Requirements*), **Attachment F** (*Quarterly Reporting Tool*); **Attachment G** (*Workforce Services Continuity Policy*); and **Attachment H** (*Workforce Services Directive (WSD) 20-08: AJCC Comprehensive and Affiliate/Specialized Certification Directive*); all of which are attached to this Agreement and fully incorporated into it by this reference.

7.3 CONTRACTOR shall ensure that all CONTRACTOR staff members operating the program under this Agreement shall be familiar and comply with the *Policy and Procedures Regarding Incident Reporting, Including Incidents of Fraud, Abuse and Waste*.

ARTICLE VIII
GENERAL PROVISIONS

8.1 Entire Agreement

A. This Agreement and any Attachments to it represent the entire and integrated agreement between the PARTIES with respect to the subject matter of this Agreement and supersede all previous agreements pertaining to such subject matter. This Agreement supersedes all prior and contemporaneous communications, negotiations, understandings, promises and agreements, either oral or written.

B. Neither CONTRACTOR nor CITY has made any promises or representations, other than those contained in this Agreement and each PARTY represents and acknowledges that it has not relied on any representation or warranty other than those explicitly set forth in this Agreement.

8.2 Amendment

The PARTIES may modify this Agreement, or any part of it, by a written amendment with CITY's and CONTRACTOR's signature. Requests for amendments and extensions to existing CONTRACT must be submitted in writing by December 31, 2025 to the contract manager. The following items must be included, but not limited to, in the amendment/extension request:

1. Reason for request for amendment/extension;
2. Action plan on how the additional time or amendment will allow the CONTRACTOR to meet contract goals;
3. New budget allocations if amendment contains increase or decrease in funding;

8.3 Interpretation

This Agreement is the product of negotiation and compromise by both PARTIES. Every provision in this Agreement must be interpreted as though the PARTIES equally participated in its drafting. Therefore, despite the provisions in California Civil Code Section 1654, if this Agreement's language is uncertain, the Agreement must not be construed against the PARTY causing the uncertainty to exist. In interpreting this Agreement and resolving any ambiguities, this Agreement will take precedence over any cover page or Attachments. If a conflict occurs between a provision in this Agreement and a provision in an Attachment, the provisions contained in the Agreement prevail.

8.4 Headings

All headings or captions in this Agreement are for convenience and reference only. They are not intended to define or limit the scope of any term, condition, or provision.

8.5 Governing Law and Jurisdiction

A. California's laws govern this Agreement's construction and interpretation. Unless this Agreement provides otherwise, any reference to laws, ordinances, rules, or regulations include their later amendments, modifications, and successor legislation.

B. If CONTRACTOR or CITY brings a lawsuit to enforce or interpret one or more provisions of the Agreement, jurisdiction is in the Superior Court of

the County of Los Angeles, California, or where otherwise appropriate, in the United States District Court, Central District of California. CONTRACTOR and CITY acknowledge that the Agreement was negotiated, entered into, and executed in the City of Glendale, California.

8.6 Waiver of Breach

If either PARTY fails to require the other to perform any term in this Agreement or in an Attachment, that failure does not prevent the PARTY from later enforcing that term, or any other term. If either PARTY waives the other's breach of a term, that waiver is not treated as waiving a later breach of the term. A waiver of a term is valid only if it is in writing and signed by the PARTY waiving it. The duties and obligations of this Agreement and an Attachment:

A. Are cumulative (rather than alternative) and are in addition to (rather than a limitation on) any option, right, power, remedy, or privilege; and

B. Are not exhausted by a PARTY's exercise of any one of them.

8.7 Attorney's Fees

If CITY or CONTRACTOR brings an action at law or in equity to enforce or interpret one or more provisions of this Agreement, the "prevailing party" is entitled to "reasonable attorney's fees" in addition to any other relief to which the prevailing party may be entitled. A "prevailing party" has the same meaning as that term is defined in California Code of Civil Procedure Section 1032(a)(4).

8.8 Further Assurances

Upon CITY's request at any time, CONTRACTOR shall promptly:

A. Take further necessary action; and

B. Sign, acknowledge, and deliver all additional documents as may be reasonable, necessary, or appropriate to carry out this Agreement's intent, purpose, and terms.

8.9 Assignment

A. This Agreement does not give any rights or benefits to anyone, other than to CITY and CONTRACTOR. All duties, obligations, and responsibilities under this Agreement are for the sole and exclusive benefit of CITY and CONTRACTOR, and are not for the benefit of another person, entity, or organization. Without CITY's prior written authorization, CONTRACTOR shall not do any one or more of the following:

1. Assign or transfer a right or interest, whether in whole, in part, temporarily, or otherwise, in this Agreement; or

2. Delegate a duty or obligation owed, whether in whole, in part, temporarily, or otherwise, under this Agreement.

B. Any actual or attempted assignment of rights or delegation of duties by CONTRACTOR, without CITY's prior written authorization, is wholly void and totally ineffective for all purposes; and does not postpone, delay, alter, extinguish, or terminate CONTRACTOR's duties, obligations, or responsibilities under this Agreement.

C. If CITY consents to an assignment of rights, or a delegation of duties, or both, CONTRACTOR's assignee or legal representative shall agree in writing to personally assume, perform, and to be bound unconditionally by the covenants, obligations, terms, and conditions in this Agreement.

8.10 Time is of the Essence

A. Except when this Agreement states otherwise, time is of the essence in this Agreement. CONTRACTOR acknowledges that this Agreement's time limits and deadlines are reasonable for CONTRACTOR's performing the Services under this Agreement.

B. Unless this Agreement specifies otherwise, any reference to "day" or "days" means calendar and not business days. If the last day for giving notice or performing an act under this Agreement falls on a weekend, a legal holiday listed in either Glendale Municipal Code Section 3.08.010 or California's Government Code, or a day when City Hall is closed, the period is extended to and including the next day that CITY is open for business. A reference to the time of day refers to local time for Glendale, California.

8.11 Notices

A. The PARTIES shall submit in writing all notices and correspondence that this Agreement requires or permits, and shall use the following delivery method:

1. Personal delivery;
2. U.S. mail, first class postage prepaid;
3. "Certified" U.S. mail, postage prepaid, return receipt requested;
4. Facsimile; or
5. Email.

B. All written notices or correspondence done in the manner described in Subsection (A) above with the street address or place, facsimile number, or email address listed in Subsection (C) below will be presumed "given" to a PARTY on whichever date occurs earliest:

1. The date of personal delivery;
2. The third (3rd) business day following deposit in the U.S. mail, when sent by "first class" mail;
3. The date on which the PARTY or its agent either signed the return receipt or refused to accept delivery, as noted on the return receipt or other U.S. Postal Service form, when sent by "certified" mail; or
4. The date of transmission, when sent by facsimile or email.

C. CITY and CONTRACTOR designate the following contact person, street address or place, telephone or facsimile number, or email address for giving notice.

CITY: City of Glendale

Workforce Development Administration
1255 South Central Avenue
Glendale, CA 91204
Attn: Judith Velasco
Telephone: (818) 548-2053
Fax: (818) 409-0463
Email: Jvelasco@Glendaleca.gov

CONTRACTOR: City of Burbank
Burbank Central Library Job Connect
110 N. Glenoaks Blvd.
Burbank, CA 91502
Attn: Eric Lashley
Telephone: (818) 238-5551
Email: ELashley@BurbankCA.gov

D. At any time, by providing written notice to the other PARTY, CITY or CONTRACTOR may change the contact information listed in Subsection (C) above.

8.12 Survival

This Section, or any term of this Agreement or an Attachment, that contemplates performance or observance after this Agreement's expiration or termination survives expiration or termination, and continues in full force and effect for the period so contemplated, including provisions relating to intellectual property ownership, the grant of a license, warranties and guarantees, warranty and guarantee disclaimers, payment terms, confidentiality, insurance, indemnification, and remedies.

8.13 Severability

The invalidity, in whole or in part, of any term of this Agreement or an Attachment will not affect this Agreement's or the Attachment's remaining terms.

8.14 Counterparts

This Agreement may be executed in counterparts, each of which is an original, but all of which constitutes one and the same document. The PARTIES shall sign a sufficient number of counterparts, so that each PARTY will receive a fully executed original of this Agreement.

8.15 Representations – Authority

The PARTIES represent that:

A. They have read this Agreement, fully understand its contents, and have received a copy of it;

B. They have the full power to enter into and perform this Agreement and to make the grant of rights contained in this Agreement;

C. Through their duly authorized representative, they are authorized to sign this Agreement, and they are bound by its term; and

D. They have executed this Agreement on the date opposite their signature.

[This space intentionally blank; signatures follow on next page]

Executed at Glendale, California.

CITY OF GLENDALE:

By _____ Date: _____
Roubik Golanian
City Manager

CONTRACTOR:

By _____ Date: _____
Justin Hess
City Manager

CITY OF GLENDALE: APPROVED AS TO FORM
NAME: _____
TITLE: _____
SIGNATURE: _____
DATE: _____

CITY OF BURBANK: APPROVED AS TO FORM
NAME: _____
TITLE: _____
SIGNATURE: _____
DATE: _____

ATTACHMENT "A"

VERDUGO WORKFORCE DEVELOPMENT ADMINISTRATION
ASSURANCES, CERTIFICATIONS AND AGREEMENTS
WORKFORCE INNOVATION AND OPPORTUNITY ACT (WIOA)

The following applies to all programs and/or projects funded under the Workforce Innovation and Opportunity Act of 2014 ("**WIOA**") conducted by CITY OF BURBANK, a municipal corporation ("**CONTRACTOR**"), on behalf of the CITY OF GLENDALE, a municipal corporation, operating in its capacity as the contract and program administrator of the Verdugo Consortium, a Joint Powers Authority of which it is a part ("**CITY**"), and under the policy direction of the Verdugo Workforce Development Board ("**VWDB**").

I. COMPLIANCE

In performance of the Agreement, CONTRACTOR shall fully comply with:

A. The provisions of the WIOA and all federal and state regulations, legislation, directives, policies, procedures, and amendments issued pursuant thereto;

B. The Office of Management and Budget ("**OMB**") Uniform Administrative Requirements, Allowable Costs, Cost Principles, and Audit Requirements for Federal Awards, Final Rule at 2 Code of Federal Regulations ("**CFR**"), Chapter I and Chapter II, Part 200, *et seq.*, specifically including but not limited to Appendix II to Part 200 (hereafter referred to as the "**Uniform Guidance 2 CFR Part 200**");

C. The Department of Labor's (the "**DOL**") exceptions at 2 CFR Chapter II, Part 2900, *et seq.* (here after referred to as the "**DOL Exceptions 2 CFR Part 2900**"); and,

D. The provisions of Public Law 107-288, Jobs for Veterans Act, as the law applies to DOL job training programs.

II. CERTIFICATIONS / ASSURANCES

Except as otherwise expressly indicated in the Agreement, the following certifications apply to all CONTRACTORS.

A. Corporate Registration: CONTRACTOR, if it is a corporation, certifies it is registered and has a status of currently active with the Secretary of State of the State of California.

B. American with Disabilities Act: CONTRACTOR assures that it will comply with the Americans with Disabilities Act of 1990 (the "**ADA**"), which prohibits discrimination on the basis of disability, as well as all applicable regulations and guidelines issued pursuant to the ADA. (42 U.S.C.12101 *et seq.*)

C. Authority to Bind Contractor: CONTRACTOR certifies that the person who has signed the Agreement is authorized to execute the following on behalf of CONTRACTOR:

additional agreements, modifications, invoices, or other documents as may be required by CITY and/or VWDB.

D. Sectarian Activities: CONTRACTOR certifies that the Agreement does not provide for the advancement or aid to any religious sect, church or creed, or sectarian purpose, and does not help to support or sustain any school, college, university, hospital, or other institution controlled by any religious creed, church, or sectarian denomination whatsoever.

E. National Labor Relations Board: CONTRACTOR (if not a public entity), by signing the Agreement, does certify and swear under penalty of perjury, that no more than one final unappealable finding of contempt of court by a Federal court has been issued against CONTRACTOR within the immediately preceding two-year period because of CONTRACTOR's failure to comply with an order of a Federal court, which orders CONTRACTOR to comply with an order of the National Labor Relations Board. (*See* Pub. Cont. Code § 10296).

F. Prior Findings: CONTRACTOR, by signing the Agreement, does certify and swear under penalty of perjury, that it has not failed to satisfy any major condition in a current or previous agreement with the DOL or the State of California and has not failed to satisfy conditions relating to the resolution of a final finding and determination, including repayment of debts.

G. Drug-Free Workplace Certification: By signing the Agreement, CONTRACTOR certifies under penalty of perjury under the laws of the State of California that CONTRACTOR will comply with the requirements of the California Drug-Free Workplace Act of 1990 and the Federal Drug-Free Workplace Act of 1988, 41 U.S.C. 8103 *et seq*., and 2 CFR part 182, and will provide a drug-free workplace by taking the following actions:

1. Publish a statement notifying employees that unlawful manufacture, distribution, dispensation, possession, or use of a controlled substance is prohibited in your workplace and specifying actions to be taken against employees for violations of this prohibition.

2. Establish a Drug-Free Awareness Program to inform employees about:

   (a) The dangers of drug abuse in the workplace;
   (b) CONTRACTOR's policy of maintaining a drug-free workplace;
   (c) Any available drug counseling, rehabilitation and employee assistance programs; and
   (d) The penalties that CONTRACTOR may impose upon employees for drug abuse violations occurring in the workplace.

3. Every CONTRACTOR employee who works under the Agreement will:

   (a) Receive a copy of CONTRACTOR's drug-free policy statement;
   (b) Agree to abide by the terms of CONTRACTOR's statement as a condition of employment on the Agreement; and

(c) Be required to notify the CONTRACTOR in writing if the employee is convicted for a violation of a criminal drug statute in the workplace and be required to do so no more than five calendar days after the conviction.

H. Child Support Compliance Act: By signing the Agreement, CONTRACTOR certifies under penalty of perjury under the laws of the State of California that, in accordance with the Child Support Compliance Act, CONTRACTOR recognizes and acknowledges the importance of child and family support obligations and shall fully comply with the applicable State and Federal laws relating to child and family support enforcement, including, but not limited to, disclosure of information and compliance with earnings assignment orders, as provided in Chapter 8 (commencing with Section 5200) of Part 5 of Division 9 of the Family Code; and that to the best of its knowledge CONTRACTOR is fully complying with the earnings assignment orders of all CONTRACTOR's employees and is providing the names of all new CONTRACTOR's employees to the New Employee Registry maintained by the State of California Employment Development Department (the "**EDD**").

I. Debarment and Suspension Certification: By signing the Agreement, CONTRACTOR certifies under penalty of perjury under the laws of the State of California that CONTRACTOR will comply with regulations implementing Executive Order 12549, Debarment and Suspension, Uniform Guidance 2 CFR Part 200, Appendix II, and that CONTRACTOR, to the best of its knowledge and belief, certifies that it and its principals:

1. Are not presently debarred, suspended, proposed for debarment, and declared ineligible or voluntarily excluded from covered transactions by any Federal department or agency.

2. Have not, within a three-year period preceding the Agreement, been convicted of or had a civil judgment rendered against it for commission of fraud or a criminal offense in connection with obtaining, attempting to obtain, or performing a public (Federal, State or local) transaction or contract. Nor shall CONTRACTOR have, within a three-year period preceding the Agreement, been convicted of or had a civil judgment rendered against it for violation of Federal or State antitrust statutes or commission of embezzlement, theft, forgery, bribery, falsification, or destruction of records, making false statements, or receiving stolen property.

3. Are not presently indicted for, or otherwise criminally or civilly charged by a government entity (Federal, State, or local), with commission of any of the offenses enumerated in Section 2 of this Debarment and Suspension Certification.

4. Have not, within a three-year period preceding the Agreement, had one or more public transactions (Federal, State, or local) terminated for cause or default. Where CONTRACTOR is unable to certify to any of the statements in this Debarment and Suspension Certification, it shall attach an explanation to the Agreement explaining in detail why it cannot so certify.

J. Mandatory Disclosures: All WIOA and Wagner-Peyser recipients of Federal awards must disclose, as required at 2 CFR 200.113, in a timely manner, in writing to the Federal awarding agency or CITY and/or VWDB, all violations of Federal criminal law involving fraud, bribery, or gratuity violations potentially affecting the Federal award. Failure to make required disclosures can result in any of the remedies described in 2 CFR 200.338 (Remedies for noncompliance), including suspension or debarment.

K. Lobbying Certification: By signing the Agreement, CONTRACTOR assures and certifies to comply with the lobbying restrictions which are codified in the DOL regulations at Uniform Guidance 2 CFR Part 200 and DOL Exceptions 2 CFR 2900, as follows:

1. No Federal appropriated funds have been paid, by or on behalf of CONTRACTOR, to any person for influencing or attempting to influence an officer or employee of any agency, a Member of Congress, an officer or employee of Congress, or an employee of a Member of Congress, in connection with this Federal contract, grant loan, or cooperative agreement, and the extension, continuation, renewal, amendment, or modification of any Federal contract, grant, loan, or cooperative agreement.

2. If any funds other than Federal appropriated funds have been paid or will be paid to any person for influencing or attempting to influence an officer or employee of any agency, a Member of Congress, and officer or employee of Congress, or an employee of a Member of Congress, in connection with the Agreement, the undersigned shall complete and submit Standard Form-LLL, "Disclosure Form to Report Lobbying", in accordance with its instructions.

3. CONTRACTOR shall require that the language of the lobbying restrictions be included in the award documents for agreement transactions over $100,000 (per OMB) at all tiers (including agreements, contracts, and subcontracts, under grants, loan, or cooperative agreements), and that all subrecipients shall certify and disclose accordingly.

4. This Lobbying Certification is a material representation of fact. CITY has placed great reliance upon CONTRACTOR's assurance and certification of this Lobbying Certification. Submission of this Lobbying Certification is a prerequisite for making or entering into the Agreement. (*See* Title 31 U.S.C. Section 1352.) Any person who fails to file the required certification shall be subject to a civil penalty of not less than $10,000 and not more than $100,000 for each failure.

L. Non-discrimination / Equal Employment Opportunity:

1. CONTRACTOR assures that is conduct under the Agreement will be in accordance with Title VI of the Civil Rights Act of 1964, and the Rules and Regulations promulgated hereunder and the provisions of WIOA Section 188. Furthermore, CONTRACTOR assures that it will comply fully with the non-discrimination and equal opportunity provisions of the following laws:

(a) Section 188 of the WIOA, which prohibits discrimination against all individuals in the United States on the basis of race, color,

religion, sex, national origin, age, disability, political affiliation or belief, and against beneficiaries on the basis of either citizenship/status as a lawfully admitted immigrant authorized to work in the United States or participation in any WIOA financially assisted program or activity;

(b) Title VI of the Civil Rights Act of 1964, as amended, which prohibits discrimination on the basis of race, color, and national origin;

(c) Section 504 of the Rehabilitation Act of 1973, as amended, which prohibits discrimination against qualified individuals with disabilities;

(d) The Age Discrimination Act of 1975, as amended, which prohibits discrimination on the basis of age;

(e) Title IX of the Education Amendments of 1972, as amended, which prohibits discrimination on the basis of sex in educational programs~~.~~; and

(f) California's Unruh Civil Rights Act, Civil Code Section 51, as amended, and California's Fair Employment and Housing Act (FEHA), Government Code Section 12940, as amended, which prohibit discrimination on the basis of race, religious creed, color, national origin, ancestry, physical disability, mental disability, medical condition, genetic information, marital status, sex, gender, gender identity, gender expression, age, sexual orientation, or military and veteran status.

2. CONTRACTOR assures that it will comply with Uniform Guidance 2 CFR Part 200, DOL Exceptions 2 CFR Part 2900, and all other regulations implementing the laws listed above. This assurance applies to CONTRACTOR's operation of the WIOA financially assisted program or activity, and to all agreements that CONTRACTOR makes to carry out the WIOA financially assisted program or activity. CONTRACTOR understands that the United States has the right to seek judicial enforcement of this assurance.

3. CONTRACTOR assures that it will include the non-discrimination and compliance provisions of this clause in all subcontracts to perform work under the Agreement.

4. CONTRACTOR certifies that it will take affirmative action to ensure that no individual will be excluded from participation in, denied the benefits of, subjected to discrimination under, or denied employment in the administration or in connection with any services or activities authorized under the WIOA in violation of any applicable nondiscrimination law, including laws prohibiting discrimination on the basis of age, race, sex, color, religion, national origin, disability, political affiliation or belief. All complaints alleging discrimination must be filed and processed according to the procedures in the applicable DOL nondiscrimination regulations.

5. CONTRACTOR certifies that is will follow all WIOA procedures relating to complaints alleging violations of the WIOA and related regulations. Participants will be notified in writing, upon enrollment into employment or training, of the WIOA complaint procedures including notification of their right to file a complaint and instructions on how to do so. Complaint procedures include: (i) the right to file a complaint; (ii) the opportunity to resolve complaints informally; (iii) written notice of hearings; and (iv) a final decision within sixty (60) days of the date of filing.

6. CONTRACTOR certifies that it will comply with Executive Order 11246, "Equal Employment Opportunity" (30 FR 12319, 12935, 3 CFR Part, 1964-1965 Comp., p. 339), as amended by Executive Order 11375, "Amending Executive Order 11246 Relating to Equal Employment Opportunity," and implementing regulations at 41 CFR part 60, "Office of Federal Contract Compliance Programs, Equal Employment Opportunity, DOL."

7. CONTRACTOR shall ensure equal employment opportunity based on objective personnel policies and practices for recruitment, selection, promotion, classification, compensation, performance evaluation, and employee management relations.

M. Salary and Bonus Limitations: In compliance with Public Law 109-234, none of the funds appropriated in Public Law 109-149 or prior Acts under the heading "Employment and Training" that are available for expenditure on or after June 15, 2006, including funds expended pursuant to the Agreement, shall be used by a recipient or subrecipient of such funds to pay the salary and bonuses of an individual, either as direct costs or indirect costs, at a rate in excess of Executive Level II, except as provided for under section 101 of Public Law 109-149. This limitation shall not apply to contractors providing goods and services as defined in Uniform Guidance 2 CFR Part 200 and the DOL Exceptions 2 CFR Part 2900. Where States are recipients of such funds, States may establish a lower limit for salaries and bonuses of those receiving salaries and bonuses from subrecipients of such funds, taking into account factors including the relative cost-of-living in the States, the compensation levels for programs involved including DOL Employment and Training Administration programs. (See Training and Employment Guidance Letter #05-06 for further clarification at http://wdr.doleta.gov/directives/corr_doc.cfm?DOCN=2262.) The incurrence of costs and receiving reimbursement for these costs under the Agreement certifies that CONTRACTOR has read the above special condition and is in compliance.

N. Federal Funding Accountability and Transparency Act (FFATA): As required by the Federal Funding Accountability and Transparency Act ("**FFATA**"), recipients of Federal awards are required to report sub-award and executive compensation information. By signing the Agreement, CONTRACTOR assures and certifies to comply with the provisions of FFATA, which includes requirements referenced in Uniform Guidance 2 CFR Part 200 and DOL Exceptions 2 CFR Part 2900.

O. Clean Air Act; Water Pollution Control Act: Pursuant to Appendix II to 2 CFR Part 200, if the Agreement is a contract or subgrant in an amount in excess of $150,000, CONTRACTOR agrees to comply with all applicable standards, orders or regulations issued

pursuant to the Clean Air Act (42 U.S.C. 7401-7671q) and the Federal Water Pollution Control Act as amended (33 U.S.C. 1251-1387). CONTRACTOR agrees to report any violations of the Clean Air Act and the Federal Water Pollution Control Act to the Federal awarding agency and the Regional Office of the Environmental Protection Agency.

P. Energy Efficiency: Pursuant to Appendix II to 2 CFR Part 200, CONTRACTOR agrees to comply with all mandatory standards and policies relating to energy efficiency which are contained in the state energy conservation plan issued in compliance with the Energy Policy and Conservation Act (42 U.S.C. 6201).

Q. Solid Waste Disposal Act: CONTRACTOR must comply with Section 6002 of the Solid Waste Act and 40 CFR Part 247 for items in excess of $10,000.

R. Davis-Bacon Act: CONTRACTOR must comply with the Davis-Bacon Act (40 U.S.C. 3141-3144 and U.S.C. 3141-3148) for prime construction contracts in excess of $2,000.

S. Contract Work Hours and Safety Standards Act: CONTRACTOR must comply with the Contract Work Hours and Safety Standards Act (40 U.S.C. 3701-3708) for contracts in excess of $100,000 that involve employment of mechanics or laborers.

III. TERMINATION

A. The performance of work under this Agreement may be terminated by CITY in whole or in part under any one of the following circumstances:

1. Termination for Cause.

If, through any cause, CONTRACTOR has either failed to provide any of the services specified in the Agreement, or failed to fulfill in a timely and proper manner its contractual obligations, or failed to make sufficient progress toward specified outcomes, or violates any of the provisions, conditions, or terms of the Agreement, CITY may notify CONTRACTOR in writing of its failure to perform. CONTRACTOR shall have ten (10) working days to respond to such notice with a corrective action plan that is agreeable to CITY in CITY's reasonable discretion. If CONTRACTOR fails to respond within said ten (10)-day period, or responds with a plan that is unacceptable in CITY's reasonable discretion, CITY may serve a termination notice on CONTRACTOR which shall become effective thirty (30) days after CITY's service thereof. In the event of such termination, CITY shall only be liable to CONTRACTOR for payment for services rendered by CONTRACTOR prior to the effective date of termination, provided that such services were performed in accordance with the provisions of the Agreement.

2. Termination for Convenience.

If either CITY or CONTRACTOR determines that such termination is in its best interest, termination of work hereunder shall be effected by the terminating PARTY's delivery of a written advance thirty (30) calendar-day Notice of Termination to the other PARTY, specifying the extent to which performance of work under the Agreement is terminated and the date upon which such termination becomes effective.

CONTRACTOR shall be entitled to receive just and equitable compensation for any Agreement services satisfactorily performed through the date of the termination. In no instance shall a termination for convenience be effective in less than thirty (30) days after receipt of written notice thereof.

3. Termination Due to Funding Cut.

CITY may unilaterally terminate this Agreement at any time its grants are suspended, reduced, or terminated before or during the Agreement Term. CITY shall make every reasonable effort to reimburse all program service-related costs incurred by CONTRACTOR. However, if this is not possible, CITY shall determine, in its reasonable discretion, the most equitable reduction of incurred costs for CONTRACTOR. In any event, the amount of reduction in funding of each Agreement as determined by CITY is not subject to appeal by CONTRACTOR.

Upon receipt of written notification of a funding reduction for the Agreement, CONTRACTOR shall follow any and all procedures for curtailing operations included in the Notice of Termination. CONTRACTOR shall take whatever reasonable steps it deems necessary to ensure that incurred costs do not exceed funding available under the Agreement. CITY and CONTRACTOR shall jointly formulate a plan as to the steps to be taken to terminate the Agreement, including termination of services to participants and the proper Exiting of participants from applicable program(s).

B. CONTRACTOR shall have the right to appeal a termination determination made by CITY under Article III, Section A, subsections 1 and 2 hereof; however, if CONTRACTOR fails to submit an appeal within thirty (30) calendar days from the date of the Notice of Termination, CONTRACTOR shall have no right to appeal a termination.

C. In any case of termination under this Article III where CITY has made a determination of the amount due CONTRACTOR, CITY shall pay to CONTRACTOR the following:

1. If no right to appeal is provided for hereunder or if no timely appeal has been taken, the amount so determined by CITY.

2. If the right to appeal is provided for hereunder and timely appeal has been taken, the amount finally determined on such appeal.

D. In arriving at the amount due CONTRACTOR under this Article III, there shall be deducted:

1. All unliquidated advances or other payments on account theretofore made to CONTRACTOR, applicable to the terminated portion of the Agreement;

2. Any amounts for claims which CITY may have against CONTRACTOR in connection with the Agreement.

E. In the event that any provision of the Agreement is unenforceable or held to be unenforceable, then the PARTIES agree that all other provisions of the Agreement have force and effect and shall not be affected hereby.

IV. INDEMNIFICATION

A. CONTRACTOR shall indemnify, defend and hold harmless, to the maximum extent permitted by law, CITY and its officers, agents, employees and representatives, from and against and all liability, suits, actions, proceedings, judgments, claims, losses, liens, damages, injuries (whether in contract or in tort, including personal injury, accidental death or property damage, and regardless of whether the allegations are false, fraudulent or groundless), costs and expenses (including attorney's fees, litigation, arbitration, mediation, appeal expenses) which in whole or in part arise out of or are connected with, or which are alleged to have arisen out of or to have been connected with, CONTRACTOR's performance of this Agreement (including performance by its agents, employees, subcontractors or by anyone CONTRACTOR directly or indirectly employed).

B. CONTRACTOR's obligation to indemnify, defend and hold harmless shall remain in effect and shall be binding upon CONTRACTOR whether such injury or damage shall accrue, or may be discovered, before or after termination of the Agreement.

C. CONTRACTOR's failure to comply with this section's provisions shall constitute a material breach upon which CITY may result in suspension of payment or may immediately terminate or suspend this Agreement. Furthermore, CONTRACTOR may be ineligible for award of future state agreements/contracts if the department determined that any of the following has occurred:

1. False information on the certifications, or

2. Violation of the terms of the certifications by failing to carry out the requirements as noted above.

D. CONTRACTOR shall immediately notify CITY in writing of any injury to persons or damage to property related to this Agreement and of any actions or suits filed on any claims made against CITY or CONTRACTOR or any other parties involved in the implementation and administration of the WIOA program.

V. INSURANCE

A. When CONTRACTOR signs and delivers this Agreement to CITY, and during this Agreement's Term, CONTRACTOR shall furnish CITY with insurance forms that fully meet the requirements of— and contain provisions entirely consistent with— all of the "Insurance Requirements," which are attached as "Attachment E" (E-1 to E-6) to this Agreement and are incorporated into it by this reference.

B. This Agreement's insurance provisions:

1. Are separate and independent from the indemnification and defense

provisions in Article IV of the Agreement; and

2. Do not limit, in any way, the applicability, scope, or obligations of the indemnification and defense provisions in Article IV of the Agreement.

VI. SUBCONTRACTING

A. None of the work or services covered by this Agreement shall be subcontracted unless such work or services are specified by a written subcontract, and approved by the CITY.

B. CONTRACTOR shall maintain and adhere to an appropriate system, consistent with federal, state and local law, for the award and monitoring of subcontracts which contain acceptable standards for ensuring accountability.

C. CONTRACTOR shall ensure that it does not subcontract with any entity whose officers have been convicted of fraud or misappropriation of funds within the last two years.

VII. STANDARDS OF CONDUCT

CONTRACTOR hereby assures that it shall comply with the standards of conduct hereinafter set out, shall maintaining the integrity of the Agreement, and shall avoid any conflict of interest in performing under the Agreement.

A. General Assurance: Every reasonable course of action will be taken by CONTRACTOR in order to maintain the integrity of the expenditure of public funds and to avoid favoritism and questionable or improper conduct. The Agreement will be administered in an impartial manner, free from efforts to gain personal, financial or political gain.

B. Conflicts of Interest:

1. CONTRACTOR assures that none of its agents or employees who exercise any functions or responsibilities in connection with CITY or the WIOA funded programs shall have any personal, financial, or political gain, direct or indirect, in this Contract.

2. CONTRACTOR shall, in accordance with 200.318 CFR (c)(1), maintain written standards of conduct covering conflicts of interest and governing the performance of its employees engaged in the selection, award and administration of any subcontracts. No employee, officer, or agent must participate in the selection, award, or administration of a subcontract supported by a Federal award if he or she has a real or apparent conflict of interest. Such a conflict of interest would arise when the employee, officer, or agent, any member of his or her immediate family, his or her partner, or an organization which employs or is about to employ any of the PARTIES indicated herein, has a financial or other interest in or a tangible personal benefit from a firm considered for a contract. The officers, employees, and agents of the CONTRACTOR must neither solicit nor accept gratuities, favors, or anything of monetary value from subcontractors or parties to subcontracts. However, CONTRACTOR may set standards for situations in which the

financial interest is not substantial or the gift is an unsolicited item of nominal value. The standards of conduct must provide for disciplinary actions to be applied for violations of such standards by officers, employees, or agents of the CONTRACTOR.

3. CONTRACTOR must disclose in writing, via e-mail, fax, or letter, any potential conflict of interest to CITY within 48 hours of identifying the potential conflict.

C. Buy-American: CONTRACTOR agrees that, as stated in Section 502 of WIOA, all funds authorized in WIOA and Wagner-Peyser must be expended in compliance with the Buy American Act (41 U.S.C. §§ 8301–8305).

D. Nepotism: CONTRACTOR certifies that it shall not hire nor permit the hiring of any person in a position funded under the Agreement if a member of the person's immediate family is employed in an administrative capacity. For the purpose of the Agreement, the term "immediate family" means spouse (common law or otherwise), child, mother, father, brother, sister, brother/sister-in-law, son/daughter-in-law, mother/father-in- law, aunt, uncle, niece, nephew, step-parent, step-child, or such other relationship which would give rise to a substantial appearance of impropriety if the person were to be hired by CONTRACTOR. The term "administrative capacity" means persons who have overall administrative responsibility for a program, including but not limited to, selection, hiring, or supervisory responsibilities.

E. Procurement: CONTRACTOR certifies that it will comply with all applicable local, State, and Federal procurement laws and regulations, including the standards indicated in Uniform Guidance 2 CFR Part 200.318 – General Procurement Standards.

VIII. FUNDING

A. CONTRACTOR assures CITY that it understands that the Agreement may have been written before ascertaining the availability of congressional and legislative appropriation of funds. CONTRACTOR enters the Agreement in advance of confirmation of the availability of funds in order to avoid program and fiscal delays which would occur if the Agreement was executed after that determination was made.

B. CONTRACTOR assures CITY that it understands that the Agreement is only valid and enforceable if: (i) sufficient funds are made available by the State Budget Act of the appropriate State fiscal years covered by the Agreement for the purposes of this program; and, (ii) sufficient funds are made available to the State by the United States Government for the fiscal years covered by the Agreement. Furthermore, CONTRACTOR understands that the Agreement is subject to any additional restrictions, limitations, or conditions enacted by the Congress and Legislature or any statute enacted by the Congress and Legislature which may affect the provisions, terms, or funding of the Agreement in any manner.

C. CITY retains the right to suspend financial assistance, in whole or in part, to protect the integrity of the funds or to ensure proper operation of the program, provided CONTRACTOR is given prompt notice and the opportunity for an informal review of CITY's decision. CONTRACTOR's failure to comply with the provisions of the Agreement and all Attachments thereto, or with the WIOA or regulations, when such failure involves fraud or misappropriation of funds, may result in immediate withholding of funds.

IX. FISCAL ACCOUNTABILITY

A. CONTRACTOR shall establish and maintain a sound financial management system, based upon Generally Accepted Accounting Principles. An integral part of the required financial management system is a system of internal accounting controls that will provide reasonable assurance that WIOA assets are safeguarded against loss from unauthorized use or disposition, and that accounting transactions affecting WIOA fund accountability are properly charged and recorded by administrative and program cost categories to permit the preparation of accurate and supportable financial reports.

B. CONTRACTOR certifies that it will comply with controls, record keeping, and fund accounting procedure requirements of WIOA, Federal, and State laws, regulations, and directives to ensure the proper accounting for program funds paid to CONTRACTOR by CITY through a cost reimbursement process.

C. The Agreement provides for the reimbursement of allowable costs that are identified and approved in the Agreement Budget, and incurred in the operation of the programs specified in the scope of services. Back-up documentation is required by CONTRACTOR to justify reimbursement payments made under the Agreement.

D. No cost shall be allowed under the Agreement which is not specifically identified in CONTRACTOR's approved Budget. CONTRACTOR shall not transfer funds between cost categories or adjust designated "total budget" line items without prior written approval by authorized VWDB staff. Invoices for reimbursement submitted by CONTRACTOR that include designated total line item expenditures above the total budget for that designated line item will not be paid until the cost overrun is reconciled. All limitations on expenditures specified in Federal and State fiscal requirements shall apply to the Agreement.

E. CONTRACTOR shall not charge nor receive compensation under the Agreement for any services or expenses unless said services or expenses are directly and exclusively related to the purpose of the Agreement.

F. In accordance with the requirements at 2 CFR 200.400(g), CONTRACTOR may not earn or keep any profit resulting from WOIA funds paid under the Agreement, or other federal financial assistance.

G. CONTRACTOR shall make available to CITY, upon request, a complete and detailed record or cost allocation of any expenses that are, in whole or in part, supported with program funds. This detailed account shall include percentages and total contributions from both WIOA and non-WIOA sources.

X. AMENDMENTS

The Agreement may be unilaterally modified by CITY, under the following circumstances:

A. There is a decrease in Federal or State funding levels.

B. Funds awarded to CONTRACTOR have not been expended in accordance with the budget included in the approved CONTRACTOR'S plan. This will occur if, after consultation with CONTRACTOR, CITY has determined, in a manner consistent with State and Federal law, regulations and policies, that funds will not be spent in a timely manner.

C. There is a change in State and Federal law or regulation requiring a change in the provisions of the Agreement.

XI. RECORDS MAINTENANCE & RETENTION

A. CONTRACTOR shall retain all records pertinent to the Agreement for a period of three (3) years from the date of final payment of the Agreement. If, at the end of three (3) years, there is litigation or an audit involving those records, CONTRACTOR will retain the records until the resolution of such litigation or audit. (*See* Uniform Guidance, Subpart D, Part 200.333-200.337.)

B. CITY, State of California, and/or the U.S. DOL, or their designee (*see* Uniform Guidance, Subpart F, Part 200.500-200.521) shall have access to and right to examine, monitor and audit all records, documents, conditions and activities related to programs funded by the Agreement. For purposes of this section, "access to" means that CONTRACTOR shall at all times maintain within the State of California a complete set of records and documents related to programs funded by the Agreement. CONTRACTOR shall comply with this requirement regardless of whether it ceases to operate or maintain a presence within the State of California before the expiration of the agreement.

C. Portable Document Format (PDF), electronic, machine readable information or paper documentation is allowed for the purpose of records maintenance and retention, as long as there are appropriate and reasonable internal controls in place to safeguard against any inappropriate alteration of records. (*See* Uniform Guidance 2 CFR 200.335 – Methods for Collection, Transmission and Storage of Information.)

XII. AUDITS

A. CONTRACTOR shall maintain and make available to auditors, at all levels, accounting and program records including supporting source documentation and cooperate with all auditors. CONTRACTOR must follow the audit requirements of Uniform Guidance 2 CFR, Part 200 and DOL Exceptions 2 CFR Part 2900.

XIII. DISALLOWED COSTS

A. CONTRACTOR will be liable for and will repay CITY any amounts expended under the Agreement found not to be in compliance with the WIOA, including, but not limited to, disallowed costs. Such repayment will be from funds (Non-Federal) other than those received under the WIOA. Payment of any disallowed costs must be made within 30 days of notification of the disallowed costs, unless otherwise specified by CITY.

B. If CONTRACTOR fails to refund any disallowed cost within 30 days, CITY may, at its sole discretion, terminate any and all agreements with CONTRACTOR effective immediately thereon.

XIV. PROPERTY

A. All property, whether finished or unfinished documents, data, studies and reports prepared or purchased by CONTRACTOR under the Agreement, will be disposed of in accordance with the direction of the CITY. In addition, any tools and/or equipment furnished to CONTRACTOR by CITY and/or purchased by CONTRACTOR with funds pursuant to the Agreement, will be limited to the use within the activities outlined in the Agreement and will remain the property of CITY and/or the DOL. Upon termination of the Agreement, CONTRACTOR will immediately return such tools and/or equipment to CITY or dispose of them as prescribed by CITY.

B. All non-expendable property acquired with program funds provided, in whole or in part, under the Agreement shall become property of CITY at the time of acquisition and shall be returned to CITY upon termination of the Agreement and completion of the program or at such time as CITY makes a request for such property. Non-expendable property is defined as property which will not be consumed or lose its identity during the Agreement Term, has a unit value in excess of $1,000 at the time of purchase, and is expected to have a useful life of one year or more.

C. CONTRACTOR shall obtain advance written approval of CITY for purchase of any non-expendable equipment having a unit purchase price of $1,000 or more, and use expectancy in excess of one year.

D. Property records for non-expendable property shall be accurately maintained by CONTRACTOR and shall reflect the following:

1. A description of the property;

2. Acquisition date and costs;

3. Supplier; and

4. Percentage of the cost of the property purchased with funds from the Agreement.

E. CONTRACTOR shall ensure that adequate safeguards are provided to prevent loss, damage, or theft of the property. In the case of all suspected thefts, and if there is any possibility of a criminal cause of the loss or damage, CONTRACTOR shall report the loss, damage, or theft to the police, and CONTRACTOR shall provide a copy of the law enforcement report to CITY and VWDB.

XV. INTELLECTUAL PROPERTY PROVISIONS

A. Federal Funding: In any agreement funded, in whole or in part, by the Federal government, CITY may acquire and maintain the Intellectual Property rights, title, and ownership, which result directly or indirectly from the agreement, except as provided in 37 CFR Par 401.14. However, pursuant to Uniform Guidance 2 CFR Part 200 and DOL Exceptions 2 CFR Part 2900, the Federal government shall have a royalty-free, non-exclusive, irrevocable, paid-up license throughout the world to use, duplicate, or dispose of such Intellectual Property throughout the world in any manner for governmental purposes and to have and permit others to do so.

B. Ownership:

1. Except where CITY has agreed in a signed writing to accept a license, CITY shall be and remain, without additional compensation, the sole owner of any and all rights, title and interest in all Intellectual Property, from the moment of creation, whether or not jointly conceived, that are made, conceived, derived from, or reduced to practice by CONTRACTOR or CITY and which result directly or indirectly from the Agreement.

2. For the purpose of the Agreement, "**Intellectual Property**" means recognized protectable rights and interest such as: patents, (whether or not issued) copy rights, trademarks, service marks, applications for any of the foregoing, inventions, trade secrets, trade dress, logos, insignia, color combinations, slogans, moral rights, right of publicity, author's rights, contract and licensing rights, works, mask works, industrial design rights, rights of priority, know how, design flows, methodologies, devices, business processes, developments, innovations, good will, any data or information maintained, collected or stored in the ordinary course of business by CITY, and all other legal rights protecting intangible proprietary information as may exist now and/or hereafter come into existence, and all renewals and extensions, regardless of whether those rights arise under the laws of the United States, or any other State, country or jurisdiction. For the purpose of the definition of Intellectual Property, "**works**" means all literary works, writings and printed matter including the medium by which they are recorded or reproduced, photographs, art work, pictorial and graphic representations and works of a similar nature, film, motion pictures, digital images, animation cells, and other audiovisual works including positives and negatives thereof, sound recordings, tapes, educational materials, interactive videos, computer software and any other materials or products created, produced, conceptualized and fixed in a tangible medium of expression. It includes preliminary and final products and any materials and information developed for the purpose of producing those final products. "Works" does not include articles submitted to peer review or reference journals or independent research projects.

3. In the performance of the Agreement, CONTRACTOR may exercise and utilize certain of its Intellectual Property in existence prior to the effective date of the Agreement. In addition, under the Agreement, CONTRACTOR may access and utilize certain of CITY's Intellectual Property in existence prior to the effective date of the Agreement. Except as otherwise set forth herein, CONTRACTOR shall not use any of CITY's Intellectual Property now existing or hereafter existing for any purposes without the prior written permission of the CITY. Except as otherwise set forth herein, neither

CONTRACTOR nor CITY shall give any ownership interest in or rights to its Intellectual Property to the other PARTY. If, during the term of the Agreement, CONTRACTOR accesses any third-party Intellectual Property that is licensed to CITY, CONTRACTOR agrees to abide by all license and confidentiality restrictions applicable to CITY in the third-party's license agreement.

4. CONTRACTOR agrees to cooperate with CITY in establishing or maintaining the CITY's exclusive rights in the Intellectual Property, and in assuring CITY's sole rights against third parties with respect to the Intellectual Property. If CONTRACTOR enters into any agreements or subcontracts with other parties in order to perform the Agreement, CONTRACTOR shall require the terms of the agreement(s) to include all Intellectual Property provisions contained herein. Such terms must include, but are not limited to, the subcontractor assigning and agreeing to assign to CONTRACTOR all rights, title and interest in Intellectual Property made, conceived, derived from, or reduced to practice by the subcontractor, CONTRACTOR, or CITY, and which result directly or indirectly from the Agreement or any subcontract.

5. The requirement for the CONTRACTOR to include all Intellectual Property Provisions contained herein in all agreements and subcontracts it enters into with other parties does not apply to agreements or subcontracts that are for customized and on-the-job training as authorized under 20 CFR 663.700-730.

6. CONTRACTOR further agrees to assist and cooperate with CITY in all reasonable respects, and execute all documents and, subject to reasonable availability, give testimony and take all further acts reasonably necessary to acquire, transfer, maintain, and enforce the CITY's Intellectual Property rights and interests.

C. Retained Rights / License Rights:

1. Except for Intellectual Property made, conceived, derived from, or reduced to practice by CONTRACTOR or CITY and which result directly or indirectly from the Agreement, CONTRACTOR shall retain title to all of its Intellectual Property to the extent such Intellectual Property is in existence prior to the effective date of the Agreement. CONTRACTOR hereby grants to CITY, without additional compensation, a permanent, non-exclusive, royalty-free, paid-up, worldwide, irrevocable, perpetual, non-terminable license to use, reproduce, manufacture, sell, offer to sell, import, export, modify, publicly and privately display/perform, distribute, and dispose of CONTRACTOR's Intellectual Property with the right to sublicense through multiple layers, for any purpose whatsoever, to the extent it is incorporated in the Intellectual Property resulting from the Agreement, unless CONTRACTOR assigns all rights, title and interest in the Intellectual Property as set forth herein.

2. Nothing in this provision shall restrict, limit, or otherwise prevent CONTRACTOR from using any ideas, concepts, know-how, methodology or techniques related to its performance under the Agreement, provided that CONTRACTOR user does not infringe the patent, copyright, trademark rights, license or other Intellectual Property rights of CITY or third-party, or result in a breach or default of any Intellectual Property

provisions contained herein or result in a breach of any provisions of law relating to confidentiality.

D. Copyright:

1. CONTRACTOR agrees that for purposes of copyright law, all works of authorship made by or on behalf of CONTRACTOR in connection with CONTRACTOR's performance of the Agreement shall be deemed "works made for hire". CONTRACTOR further agrees that the work of each person utilized by CONTRACTOR in connection with the performance of the Agreement will be a "work made for hire"; whether that person is an employee of CONTRACTOR or that person has entered into an agreement with CONTRACTOR to perform the work. CONTRACTOR shall enter into a written agreement with any such person that: (i) all work performed for CONTRACTOR shall be deemed a "work made for hire" under the Copyright Act and (ii) that person shall assign all rights, title, and interest to the CITY to any work product made, conceived, derived from or reduced to practice by CONTRACTOR or CITY and which result directly or indirectly from the Agreement. (*See* to Uniform Guidance 2 CFR Part 200 and DOL Exceptions 2 CFR Part 2900.)

2. All materials, including, but not limited to, computer software, visual works or text, reproduced or distributed pursuant to the Agreement that include Intellectual Property made, conceived, derived from, or reduced to practice by CONTRACTOR or CITY and which result directly or indirectly from the Agreement may not be reproduced or disseminated without prior written permission from the CITY.

E. Patent Rights: With respect to inventions (*see* Uniform Guidance 2 CFR Part 200 and DOL Exceptions 2 CFR Part 2900), made by CONTRACTOR in the performance of the Agreement, which did not result from research and development specifically included in CONTRACTOR's agreement scope of services, CONTRACTOR hereby grants to CITY a license for devices or material incorporating, or made through the use of such inventions. If such inventions result from research and development work specifically included within CONTRACTOR's agreement scope of services, then CONTRACTOR agrees to assign to CITY, without additional compensation, all its rights, title and interest in and to such inventions and to assist the CITY in securing United States and foreign patents with respect thereto.

F. Third-Party Intellectual Property: Except as provided herein, CONTRACTOR agrees that its performance of the Agreement shall not be dependent upon or include any Intellectual Property of CONTRACTOR or third-party without first: (i) obtaining CITY's prior written approval; and (ii) granting to or obtaining for CITY, without additional compensation, a license for any of CONTRACTOR or third-party's Intellectual Property in existence prior to the effective date of the Agreement. If such a license upon these terms is unattainable, and the CITY determines that the Intellectual Property should be included in or is required for CONTRACTOR's performance of the Agreement, CONTRACTOR shall obtain a license under terms acceptable to the CITY.

G. Warranties:

1. CONTRACTOR represents and warrants that:

(a) It has secured and will secure all rights and licenses necessary for its performance of the Agreement.

(b) Neither CONTRACTOR's performance of the Agreement, nor any use, reproduction, manufacture, sale, offer to sell, import, export, modification, public and private display/performance, distribution, and disposition of the Intellectual Property made, conceived, derived from, or reduced to practice by CONTRACTOR or CITY and which result directly or indirectly from the Agreement will infringe upon or violate any Intellectual Property right, non-disclosure obligation, or other proprietary right or interest of any third-party or entity now existing under the laws of, or hereafter existing or issued by, any State, the United States, or any foreign country. There are currently no actual or threatened claims by any such third-party based on an alleged violation of any such right by CONTRACTOR.

(c) Neither CONTRACTOR's performance nor any part of its performance will violate the right of privacy of, or constitute a libel or slander against any person or entity.

(d) It has secured and will secure all rights and licensees necessary for Intellectual Property including, but not limited to, consents, waivers, or releases from all authors off music or performances used, and talent (radio, television and motion picture talent), owners of any interest in and to real estate, sites locations, property or props that may be used or shown.

(e) It has not granted and shall not grant to any person or entity any right that would or might derogate, encumber, or interfere with any of the rights granted to CITY in the Agreement.

(f) It has appropriate systems and controls in place to ensure that State and Federal funds will not be used in the performance of the Agreement for the acquisition, operation or maintenance of computer software in violation of copyright laws.

(g) It has no knowledge of any outstanding claims, licenses or other charges, liens, or encumbrances of any kind or nature whatsoever that could affect in any way CONTRACTOR's performance of the Agreement.

2. CITY makes no warranty that the intellectual property resulting from the agreement does not infringe upon any patent, trademark, copyright or the like now existing or subsequently issued.

H. Intellectual Property Indemnity:

1. CONTRACTOR shall indemnify, defend and hold harmless CITY and VWDB, and each of their licensees, assignees, officers, directors, employees, agents, representatives, successors, and users of its products, ("Indemnitees") from and against

all claims, actions, damages, losses, liabilities (or actions or proceedings with respect to any thereof), whether or not rightful, arising from any and all actions or claims by any third-party or expenses related thereto (including, but not limited to, all legal expenses, court costs, and attorneys' fees incurred in investigating, preparing, serving as a witness in, or defending against, any such claim action, or proceeding, commenced or threatened) to which any of the Indemnitees may be subject, whether or not CONTRACTOR is a party to any pending or threatened litigations, which arise out of or are related to (i) the incorrectness or breach of any of the representations, warranties, covenants or agreements of CONTRACTOR pertaining to Intellectual Property; or (ii) any Intellectual Property infringement, or any other type of actual or alleged infringement claim, arising out of CITY's use, reproduction, manufacture, sale, offer to sell, distribution, import, export, modification, public and private performance/display, license, and disposition of the Intellectual Property made, conceived, derived from, or reduced to practice by CONTRACTOR or CITY and which result directly or indirectly from the Agreement. This indemnity obligation shall apply irrespective of whether the infringement claim is based on a patent, trademark or copyright registration that was issued after the effective date of the Agreement. CITY reserves the right to participate in and/or control, at CONTRACTOR's expense, any such infringement action brought against CITY.

2. Should any Intellectual Property licensed by CONTRACTOR to CITY under the Agreement become the subject of an Intellectual Property infringement claim, CONTRACTOR will exercise its authority reasonably and in good faith to preserve CITY's right to use the licensed Intellectual Property in accordance with the Agreement at no expense to CITY. CITY shall have the right to monitor and appear through its own counsel (at CONTRACTOR's expense) in any such claim or action. In the defense or settlement of the claim, CONTRACTOR may obtain the right for CITY to continue using the licensed Intellectual Property or, replace or modify the licensed Intellectual Property so that the replaced or modified Intellectual Property becomes non-infringing provided that such replacement or modification is functionally equivalent to the original licensed Intellectual Property. If such remedies are not reasonably available, CITY may be entitled to a refund of all monies paid under the Agreement, without restriction or limitation of any other rights and remedies available at law or in equity.

3. CONTRACTOR agrees that damages alone would be inadequate to compensate CITY for breach of any term of these Intellectual Property provisions by CONTRACTOR. CONTRACTOR acknowledges CITY would suffer irreparable harm in the event of such breach and agrees CITY shall be entitled to obtain equitable relief, including without limitation an injunction, from a court of competent jurisdiction, without restriction or limitation of any other rights and remedies available at law or in equity.

XVI. CONFIDENTIALITY REQUIREMENTS

CITY and CONTRACTOR will exchange various kinds of information pursuant to the Agreement. That information will include data, applications, program files, and databases. These data and information are confidential when they define an individual or an employing unit. Confidential information requires special precautions to protect it from unauthorized use, access,

disclosure, modification, and destruction. The sources of information may include, but are not limited to, the CITY, State of California EDD, California Department of Social Services, California Department of Education, California Department of Corrections and Rehabilitation, County Welfare Department(s), County Office of Child Support, Office of the District Attorney, California Department of Mental Health, California Office of Community Colleges and Department of Alcohol and Drug Programs.

CITY and CONTRACTOR agree that:

A. Each PARTY must recognize and safeguard personally identifiable information ("**PII**") and information designated as sensitive in accordance with Uniform Guidance 2 CFR 200.303 – Safeguarding Personally Identifiable Information. CONTRACTOR must take reasonable measures to safeguard protected PII, as well as any information that the CITY designates as sensitive. Both CONTRACTOR and CITY must meet the requirements in Training and Employment Guidance letter (TEGL) 39-11, Guidance on the Handling and Protection of Personally Identifiable Information, located at http://wdr.doleta.gov/directives/corr_doc.cfm?DOCN=7872.

B. Each PARTY shall keep all information that is exchanged between them in the strictest confidence and make sure information available to their respective employees is only on a "need-to-know" basis.

C. Each PARTY shall provide security sufficient to ensure protection of confidential information from improper use and disclosures, including sufficient administrative, physical, and technical safeguards to protect this information from reasonable unanticipated threats to the security or confidentiality of the information.

D. CONTRACTOR agrees that information obtained under the Agreement will not be reproduced, published, sold or released in original or in any other form for any purpose other than those specifically identified in the Agreement.

1. Aggregate Summaries: All reports and/or publications developed by CONTRACTOR based on data obtained under the Agreement shall contain confidential data in aggregated or statistical summary form only. "Aggregated" refers to a data output that does not allow identification of an individual or employer unit.

2. Publication: Prior to publication, CONTRACTOR shall carefully analyze aggregated data outputs to ensure the identity of individuals and/or employer units cannot be inferred pursuant to Unemployment Insurance Code Section 1094(c). Personal identifiers must be removed. Geographic identifiers should be specified only in large areas and as needed, and variables should be recorded in order to protect confidentiality.

3. Minimum Data Cell Size: The minimum data cell size or derivation thereof shall be three participants for any data table released to outside parties or to the public.

E. Each PARTY agrees that no disaggregate data, identifying individuals or employers, shall be released to outside parties or the public.

F. CONTRACTOR shall notify CITY of any actual or attempted information security incidents, within 24 hours of initial detection, by telephone to the VWDB. Information security incidents include, but are not limited to, any event (intentional or unintentional), that causes the loss, damage, or destruction, or unauthorized access, use, modification, or disclosure of information assets. CONTRACTOR shall cooperate with the CITY in any investigation of security incidents. The system or device affected by an information security incident and containing confidential data obtained in the administration of this program shall be immediately removed from operation upon confidential data exposure or a known security breach. It shall remain removed from operation until correction and mitigation measures are applied. If CONTRACTOR learns of a breach in the security of the system which contains confidential data obtained under the Agreement, then CONTRACTOR must provide notification to individuals pursuant to Civil Code Section 1798.82.

G. CONTRACTOR shall provide for the management and control of physical access to information assets (including personal computer systems, computer terminals, mobile computing devices, and various electronic storage media) used in performance of the Agreement. This shall include, but is not limited to, security measures to physically protect data, systems, and workstations from unauthorized access and malicious activity; the prevention, detection, and suppression of fires; and the prevention, detection, and minimization of water damage.

H. At no time will confidential data obtained pursuant to the Agreement be placed on a mobile computing device or on any form of removable electronic storage media of any kind unless the data are fully encrypted.

I. Each PARTY shall provide its employees with access to confidential information with written instructions fully disclosing and explaining the penalties for unauthorized use or disclosure of confidential information found in Section 1798.55 of the Civil Code, Section 502 of the Penal Code, Section 2111 of the Unemployment Insurance Code, Section 10850 of the Welfare and Institutions Code and other applicable local, State and Federal laws.

J. Each PARTY shall (where it is appropriate) store and process information in electronic format, in such a way that unauthorized persons cannot reasonably retrieve the information by means of a computer.

K. Each PARTY shall promptly return to the other PARTY confidential information when its use ends, or destroy the confidential information utilizing an approved method of destroying confidential information: shredding, burning, or certified or witnessed destruction. Magnetic media are to be degaussed or returned to the other PARTY.

L. If the CITY or CONTRACTOR enters into an agreement with a third-party to provide WIOA services, the CITY and CONTRACTOR agree to include these data and security and confidentiality requirements in the agreement with that third-party. In no event, shall said information be disclosed to any individual outside of that third-party's authorized staff, subcontractor(s), service providers, or employees.

M. CONTRACTOR may, in its program operations, allow an individual to register for resume-distribution services at the same time the individual enrolls in CalJOBS.

CONTRACTOR shall ensure that it and all subcontractors comply with the Intellectual Property requirements of the Agreement, the confidentiality requirements of the Agreement and any other terms of the Agreement that may be applicable. In addition, the following requirements must be adhered to by CONTRACTOR and its subcontractors:

1. All client information submitted over the Internet to CONTRACTOR and/or subcontractor(s) databases must be protected, at a minimum, by 128-bit Secure Socket Layer (SSL) encryption. Client's social security numbers must be stored in a separate database within CONTRACTOR and/or subcontractor(s) network of servers, and protected by a firewall and a secondary database server firewall or AES data encryption. If a CONTRACTOR and/or subcontractor(s) obtain confidential information, the agreement between CONTRACTOR and its subcontractor(s) must specifically state the purpose for the data collection and the term of records retention must be stated, and directly related, to the purpose and use of the information. In accordance with Uniform Guidance 2 CFR Part 200 and DOL Exceptions 2 CFR Part 2900, social security numbers and other client specific information shall not be retained for more than three years after a client completes services. CONTRACTOR and/or subcontractor(s) should extend this period, only if any litigation, claim, negotiation, audit, or other action involving the records has been started before the end of the three-year retention period. In this case, the records should be maintained until completion of the action and resolution of all issues arising from it, or until the close of the three-year retention period, whichever is later.

2. Client information (personal information that identifies a client such as name and social security number) and/or demographic information of a client (such as wage history, address, and previous employment) shall not be used as a basis for commercial solicitation during the time the client or agency is using CONTRACTOR and/or subcontractor(s) services. Client information and/or demographic information shall not be used for any purposes other than those specific program purposes set forth in CONTRACTOR and subcontractor(s) agreement scope of services.

N. Each PARTY shall designate an employee who shall be responsible for overall security and confidentiality of its data and information systems and each PARTY shall notify the other of any changes in that designation.

Attachment B
CITY OF GLENDALE - VERDUGO WORKFORCE DEVELOPMENT BOARD
BUDGET EXHIBIT

CONTRACTOR	**City of Burbank**
CONTRACT DATES	**July 1, 2025 to June 30, 2026**
PROJECT NAME	**Job Connect**

Line Item	Total
Salaries/Benefits	$ 145,500
Staff Travel/Meeting/Conferences	$ -
Operating Expenses	$ -
Training	$ -
Supportive Services	$ -
Stipend/Incentives	$ -
Contracts	$ -
Other	$ -
TOTAL BUDGET NOT TO EXCEED	**$ 145,500**

BUDGET DETAILS

Staff Salaries and Benefits Detail

Position Title	% Charged to this project	Actual Annual Salary	Actual Annual Benefits	Total Annual Salary	Actual Salary Amount Requested
Administrative Analyst II	60.0%	$ 99,812	$ 26,956	$ 126,768	$ 76,061
Administrative Analyst I	15.5%	$ 82,158	$ 24,559	$ 106,717	$ 16,571
Librarian	45.1%	$ 89,268	$ 27,890	$ 117,158	$ 52,867
				$ -	$ -
Program Staff Total		$ 271,237	$ 79,405	$ 350,642	$ 145,500

Staff Salaries and Benefits TOTAL	**$ 145,500**

Staff Travel/Meeting/Conferences

Line Item	Cost per	# of items	Total
N/A			
Trave/Meeting/Conferences TOTAL			$ -

N/A

Operating Expenses Detail

Line Item (Example: Supplies, Printing, etc.)	Cost/Amount
N/A	
Operating Expenses TOTAL	**$ -**

Training Expenses Detail		
ITA/Classroom Training		
# of Participants	Cost Per ITA	Total
N/A	$ -	$ -
ITA Expenses TOTAL		

OJT/On the Job Training		
# of Participants	Cost Per OJT	Total
N/A	$ -	$ -
OJT Expenses TOTAL		

TJ/TRANSITIONAL JOBS WAGES/BENEFITS ADULT					
# of Participants	Hourly Wage	Benefits (%)	Total Benefits per Hour	Number of Hours	Total
N/A					
TJ Wage TOTAL					$ -

WEX/ WAGES/BENEFITS YOUTH					
# of Youth	Hourly Wage	Benefits (%)	Total Benefits per Hour	Number of Hours	Total
N/A					
WEX Wage TOTAL					**$ -**

Training Expenditure TOTAL	**$ -**

Supportive Services			
Item	Number	Cost per Item	Total
N/A			
Supportive Services TOTAL			**$ -**

Stipends/Incentives			
Line Item	# of items	Cost Per items	Total
N/A			
Stipends/Incentive TOTAL			**$ -**

Contracts	
Contractor Name	Amount
N/A	
Contracts TOTAL	**$ -**

Other	
Line Item	Total
N/A	
Other TOTAL	$ -

CONTRACT TOTAL BUDGET - NOT TO EXCEED	$ 145,500

Internal Use Only	
Project Data	
PROJECT NO:	
CONTRACT NO:	
ALLOCATION COST:	
PROJECT NO:	
CONTRACT NO:	
ALLOCATION COST:	
PROJECT NO:	
CONTRACT NO:	
ALLOCATION COST:	
TOTAL:	

\

ATTACHMENT C

Verdugo Workforce Development Administration
Policy and Procedure Regarding
Incident Reporting, Including Incidents of Fraud, Abuse and Waste

I. Purpose

The purpose of this Policy and Procedure is to provide all Verdugo Workforce Innovation and Opportunity Act (WIOA) staff and contractors with the requirements under WIOA to report to the appropriate agencies any and all incidents, including, but not limited to criminal fraud, criminal abuse or other criminal activity and noncriminal complaints, such as waste of funds.

Verdugo WIOA staff includes staff of Verdugo Workforce Development Administration (VWDA), the Verdugo Jobs Center (VJC) and the Burbank Annex of the VJC (BA).

II. Governing Law

20 CFR 683.620 and Training and Employment Guidance Letter (TEGL) 2-12

III. Definitions and Glossary of Terms Related to Reportable Issues

The federal definitions that follow are provided for use as a guide in the identification of fraud, abuse, and other criminal activity. Since the definitions cannot address every possible activity, questions as to whether an activity is reportable under this policy should be referred to VWDA for clarification and guidance.

Complaint: For this Policy only, means criminal complaints and noncriminal complaints accepted by the Department of Labor (DOL) as incidents, such as gross waste of funds, mismanagement and dangers to the public health and safety.

Fraud is any deceitful act or omission, or willful device used with the intent to obtain some unjust advantage for one party, or to cause an inconvenience or loss to another party. Types of fraud include embezzlement, forgery, theft, solicitation and receipt of bribes (kickbacks), and falsification of records and claims regarding trainees (e.g., knowingly enrolling ineligible participants). Criminal fraud is a type of larceny and is punishable under both federal and California law as a felony. Civil fraud is subject to tort actions under civil laws.

Misapplication of Funds is defined as any use of funds, assets, or property not authorized or provided for in the grant or contract, This category includes, but is not limited to , nepotism, political patronage, use of participants for political activity, intentional services to ineligible enrollees, conflict of interest, failure to report income derived from federal funds, violation of contract provisions, maintenance of effort violations, and the use of the Workforce Innovation and Opportunity Act (WIOA) funds for other than WIOA purposes.

Gross Mismanagement is defined as actions, or situations arising out of management ineptitude or oversight, which severely hamper accomplishment of program goals. These include situations, which lead to a major violation of contract provisions and/or which lead to waste of government

resources and put into serious jeopardy future support for a particular project. This category includes, but not limited to, unauditable records, unsupported costs, highly inaccurate fiscal and/or program reports, payroll discrepancies, payroll deductions not paid to the Internal Revenue Service or the State of California, and the lack of internal procedures.

Employee/Participant Misconduct should be considered as actions occurring during or outside work hours that reflect negatively on the program or its purpose, and may include, but are not limited to, conflict of interest involving outside employment, business and professional activities, and the receipt or giving of gifts, fees, entertainment, and favors; misuse of federal property; misuse of official information; and other activities that might adversely affect the confidence of the public regarding the integrity of government.

Standard of Conduct Violations are violations of terms and conditions stipulated in the subgrant agreement. The relevant stipulations in the subgrant agreement are General Assurances, Employment of Former State Employees, Conducting Business Involving Relatives, Conducting Business Involving Close Personal Friends and Associates, Avoidance of Conflict of Economic Interest, and Maintenance of Effort.

IV. Procedures

All Verdugo WIOA staff and subcontractors are required to promptly report to the following three agencies simultaneously all allegations of WIOA-related fraud, abuse, gross waste of funds, dangers to public health and safety, and other criminal activity. Within one workday of detection or discovery of information alleging fraud, abuse, or other criminal activity involving WIOA funds, a written incident report shall be prepared by the detecting entity. Reports should be made using the form on page five (5) of this Policy.

The agencies that must be notified are:

1. Verdugo Workforce Development Administration
   1255 S. Central Ave.
   Glendale, CA 91204
   Attention: Judith Velasco
   (818) 937-8031

2. Compliance Resolution Unit
   Compliance Review Division, MIC 22M
   Employment Development Department
   P.O. Box 826880
   Sacramento, CA 94280-0001

3. Office of Inspector General
   United States Department of Labor

   By mail to:
   200 Constitution Avenue, N.W., Room S-5506
   Washington, DC 20210

   Or at their website: http://www.oig.dol.gov/hotlineform.htm
   Or by phone: 202-693-6999 or 1-800-347-3756
   Or by fax: 202-693-7020
   Or by email: hotline@oig.dol.gov

Allegations considered to be of an emergency nature may be reported by telephone to the Employment Development Department's Compliance Resolution Unit Supervisor at (916) 653-3270 and by calling the Office of Inspector General/Department of Labor (OIG/DOL) Hotline at (800) 347-3756.

Anyone, whether Verdugo WIOA staff or contractors, who detect the presence or appearance of fraud, abuse, or other criminal activity must obtain sufficient information to provide a clear, concise report of each incident. Reports must include a statement of all facts, known at the time, as well as any known or estimated loss of WIOA funds resulting from the incident.

It is important that an initial report is made to the Office of Inspector General (OIG) and Compliance Review Division (CRD) within one working day of the detection of the incident. The submission of an incident report should not be delayed even if all facts are not readily available. Any facts subsequently developed by the reporting entity are to be forwarded in a supplemental incident report.

Whenever the entity reporting the allegation of an incident believes that immediate action to prevent further financial loss or other damage is necessary, or recovery of funds or property may be impeded if immediate action is not taken, the reporting entity has the responsibility to take any action it deems appropriate, including contacting the local law enforcement agency. Any immediate action taken or planned by the reporting entity must be reported to CRD when the incident report is submitted.

The reporting procedures do not supersede the responsibility of contractors or the VWDA to safeguard WIOA funds by taking prompt and appropriate corrective action when any evidence of a violation of WIOA or its implementing regulations is found.

V. Notification and Responsibilities of Contractors

This policy shall be included as an attachment to all VWDA contracts, as a means of notifying contractors of their responsibilities to be alert for instances of fraud, abuse, and criminal activity committed by staff, contractors, or program participants, and as a means of notifying contractors of the appropriate reporting mechanisms.

ATTACHMENT C

All Verdugo WIOA contractors are responsible for the following:

1. To be alert for instances of fraud, abuse and criminal activity committed by staff members, subcontractors or program participants.
2. To establish appropriate internal program and fiscal management procedures to prevent and detect fraud, abuse, waste, or other criminal activity, and to document in writing and implement these procedures.
3. To establish, document in writing and implement procedures to immediately notify the VWDA of any suspected or proven fraud, abuse, or other criminal activity involving WIOA-funded activities.

During the program monitoring for all contracts with VWDA, all WIOA contractors will be asked to provide a copy of their incident reporting policy, which incorporates items 2 and 3 above, to the program monitor.

VI. Responsibilities of Verdugo WIOA Staff and VWDA

Any incidents reported to the VWDA by any Verdugo WIOA staff member shall be forwarded to Judith Velasco, who is designated as the person responsible for notifying CRD and OIG.

References:

- Public Law 113-128, Workforce Innovation and Opportunity Act (WIOA) of 2014, Section 185(b) https://www.gpo.gov/fdsys/pkg/PLAW-113publ128/pdf/PLAW-113publ128.pdf
- 20 CFR 683.430 and 683.620 https://www.gpo.gov/fdsys/pkg/FR-2016-08-19/pdf/2016-15975.pdf
- Training and Employment Guidance Letter (TEGL) 2-12 https://wdr.doleta.gov/directives/corr_doc.cfm?DOCN=9222
- Workforce Innovation and Opportunity Act Policy 5412: Reporting Incidents Involving Workforce Innovation and Opportunity Act (WIOA) Funding http://www.wa.gov/esd/1stop/policies/wioa_title1.htm

ATTACHMENT C

Incident Report (IR) form, Office of Inspector General, OIG 1-156
http://wdr.doleta.gov/directives/attach/TEGL/TEGL_2_12_att_c.pdf

Incident Report

1. Type of report (check one) ☐ Initial ☐ Supplemental ☐ Final ☐ Other *[specify]*	2. Type of incident (check one) ☐ Conduct violation ☐ Criminal violation ☐ Program violation
3. Allegation against (check one) ☐ Contractor ☐ Program Participant ☐ Other *[(specify), give name and position of employee(s), list telephone number, Social Security Account number, if applicable, and other identifying data.]*	
4. Location of incident *[give complete name(s) and addresses of organizations(s) involved]*	
5. Date and time of incident/discovery *[date, time]*	
6. Source of complaint (check one) ☐ Audit ☐ Contractor ☐ Program Participant ☐ Public ☐ Investigative Law Enforcement Agency *[(specify)]* ☐ Other *[(specify), give name and telephone number so additional information can be obtained.]*	
7. Contacts with law enforcement agencies *[specify name(s) and agency contacted and results]*	
8. Persons who can provide additional information *[(include custodian of records) name, position or job title, employment, local address (street, city and state) or organization, if employed and telephone number]*	
9. Details of incident *[describe the incident]*	

Attachment D

Verdugo Workforce Development Board
Workforce Development Administration

Integrated Service Delivery Monitoring Tool – Burbank Affiliate Site
subject to change based on funding and program requirements

Name of Site: _____ PY: _____

Staff Providing Information: _____

Title: _____

Signature: _____

Date: _____

Basic Career Services

1. Describe your process of providing basic career services to customers.

2. Please provide information how you refer Priority of Service clients to the Verdugo Jobs Center and tracking system that is being utilized for these referrals.

3. Please provide any flyers for workshops or any other workforce related events that were held.

Business and Employer Services

1. Please describe and provide examples of how your center has outreached to and built relationships with local employers during 2025-26.

2. Please describe and provide examples of the services your center has rendered to local employers during 2025-26.

3. Please list any business service events, such as job fairs and onsite recruitments, that your center has hosted during 2025-26. Please provide documentation, if any.

Rapid Response and Layoff Aversion

1. Please list any Rapid Response and Lay Off Aversion activated that you identified or attended during 2025-26.

Performance Data

Number of individuals provided with Basic Career Services/Self Services	_____	Number of businesses assisted with outreach efforts	_____
Number of individuals referred to the Verdugo Jobs Center	_____	Number of businesses that were provided Rapid Response Services	_____

The following section is to be completed by the VWDB Program Monitor during the site visit.

Resources Available to Enrolled Customers

Item	Number	Comments
Computers		
Printers		
Phones		
Fax machine		
TTY phones		
Computer for people with disabilities		
Customer survey		

Assurance of Nondiscrimination and Equal Opportunity
(WIOA 188, 29 CFR Part 38)

Item	Posted?		Comments
Equal Opportunity is the Law	Yes ☐	No ☐	
What To Do If You Believe You Have Experienced Discrimination	Yes ☐	No ☐	
Minimum wage requirement	Yes ☐	No ☐	

Site Visit - Completed by Verdugo WDB Program Monitor	
Date:	**Time:**
Verdugo Workforce Development Monitor - Print Name	
Verdugo Workforce Development Monitor – Signature	

"PROFESSIONAL LIABILITY" INSURANCE

1.1 Without limiting CONTRACTOR's liability and at its sole expense, CONTRACTOR shall obtain, pay for, and maintain a Professional Liability insurance policy.

1.2 The Professional Liability policy must:

(A) Include "**errors and omissions**" coverage or "**malpractice**" coverage;

(B) Afford "**practice specific**" or "**project specific**" coverage;

(C) Provide limits of liability in an amount not less than:

(1) ONE MILLION DOLLARS ($1,000,000) per claim; and

(2) TWO MILLION DOLLARS ($2,000,000) in the aggregate;

(D) Cover a claim or claims arising out of the performance of professional services by:

(1) CONTRACTOR;

(2) CONTRACTOR's Subcontractor(s);

(3) Anyone whom CONTRACTOR or its Subcontractor(s) directly or indirectly employs or uses; or

(4) Anyone whose acts CONTRACTOR or its Subcontractor(s) may be liable; and

(E) Provide coverage for:

(1) The duration of this Agreement; and

(2) At least three (3) years after the Project's completion:

(a) CONTRACTOR shall obtain, pay for, and maintain an endorsement that adds an "extended reporting period" ("ERP") or a "discovery" feature— to allow CITY to report a claim— for a period of not less than three (3) years following the initial policy's expiration, or following CITY's recordation of its "notice of completion" for the Project, whichever date is later. The endorsement for the ERP or discovery feature must provide identical policy limits, and meet the conditions, described in subparagraphs 1.2 (A) through (D) above; or

(b) CONTRACTOR shall obtain, pay for, and maintain successive renewal or replacement policies (with "prior acts" coverage), for a period of three (3) years following the initial policy's expiration, or following CITY's recordation of its "notice of completion" for the Project, whichever date is later. Each policy must have a "retroactive date" that coincides with, or is earlier than, this Agreement's Effective Date. Additionally, each policy must provide identical policy limits, and meet the conditions, described in subparagraphs 1.2 (A) through (D) above.

1.3 All ERP or discovery endorsements, renewal policies, and replacement coverage policies are subject to CITY's review and approval, in its sole discretion.

1.4 CONTRACTOR shall pay the full amount of all deductibles and any self-insured retention per claim for coverage under the Professional Liability insurance policy.

"WORKERS' COMPENSATION" INSURANCE

1.1 At its own expense, CONTRACTOR shall obtain, pay for, and maintain— and shall require each of its Subcontractors to obtain and maintain— for the duration of this Agreement:

(A) Complete Workers' Compensation insurance, meeting or exceeding the coverages and amounts that California law requires; and

(B) Employer's Liability insurance in an amount not less than:

(1) ONE MILLION DOLLARS ($1,000,000) per accident for bodily injury or disease;

(2) ONE MILLION DOLLARS ($1,000,000) per employee for bodily injury or disease; and

(3) ONE MILLION DOLLARS ($1,000,000) policy limit.

1.2 CONTRACTOR shall provide CITY with a "***certificate of insurance***" and a subrogation endorsement, "***Waiver of Our Right to Recover From Others***"— on forms satisfactory to the City Attorney or City's Risk Manager, and signed by the insurance carrier or its authorized representative— which fully meet the requirements of, and contain provisions entirely consistent with, this Agreement's workers' compensation insurance requirements.

1.3 CITY shall not be liable to CONTRACTOR's personnel, or anyone CONTRACTOR directly or indirectly employs or uses, for a claim at law or in equity arising out of CONTRACTOR's failure to comply with this Agreement's workers' compensation insurance requirements.

"COMMERCIAL GENERAL LIABILITY" OR "BUSINESSOWNERS LIABILITY" INSURANCE

1.1 At its own expense, CONTRACTOR shall obtain, pay for, and maintain— and shall require each of its Subcontractors to obtain and maintain— a "Commercial General Liability" or a "Businessowners Liability" insurance policy on an ***occurrence*** basis to fully protect CONTRACTOR and CITY from claims and suits for bodily injury, personal and advertising injury, property damage, and medical payments. The policy must add the City of Glendale and its officers, agents, employees, and representatives (collectively, "CITY AND ITS REPRESENTATIVES") as ***additional insureds***.

1.2 Coverage afforded to CITY AND ITS REPRESENTATIVES must be at least as broad as that afforded to CONTRACTOR. If CONTRACTOR has higher limits than the limits specified in these insurance requirements, or has additional broader coverage, or has both, the insurer shall make available the higher limits and broader coverage to CITY AND ITS REPRESENTATIVES. The insurance must be written for the limits of liability specified below:

(A) ONE MILLION DOLLARS ($1,000,000) per occurrence, or the full per occurrence limits of the policy— whichever limit is greater— for bodily injury (including accidental death) to any one person;

(B) ONE MILLION DOLLARS ($1,000,000) per occurrence, or the full per occurrence limits of the policy— whichever limit is greater— for personal and advertising injury to any one person;

(C) ONE MILLION DOLLARS ($1,000,000) per occurrence, or the full per occurrence limits of the policy— whichever limit is greater— for property damage; and

(D) TWO MILLION DOLLARS ($2,000,000) general aggregate limit, or the full aggregate limits of the policy— whichever limit is greater.

1.3 The liability insurance must include all major divisions of coverage and must cover:

(A) Premises Operations (including Explosion, Collapse, and Underground ["X,C,U"] coverages as applicable);

(B) Independent Contractors' Protective Liability;

(C) Products and Completed Operations (maintain same limits as above until five (5) years after: recordation of the Notice of Completion or final close-out of the Agreement);

(D) Personal and Advertising Injury (with Employer's Liability Exclusion deleted);

(E) Contractual Liability; and

(F) Broad Form Property Damage.

1.4 CONTRACTOR shall provide CITY with a "***certificate of insurance***" and an "***additional insured endorsement***"— on forms satisfactory to the City Attorney or City's Risk Manager, and signed by the insurance carrier or its authorized representative— which fully meet the requirements of, and contain provisions entirely consistent with, all of the Insurance Requirements.

1.5 The "certificate of insurance" and an "additional insured endorsement" must state:

"The City of Glendale, and its officers, agents, employees, and representatives are included as additional insureds under the policy(s). This insurance is primary to all other insurance of the City. The City's insurance, or self-insurance, or both, will apply in excess of— and will not contribute with— this insurance. This insurance applies separately to each insured or additional insured who is seeking coverage, or against whom a claim is made or a suit is brought. The issuing company

shall mail thirty (30) days advance notice to the City for any policy cancellation, termination, non-renewal, or reduction in coverage."

"BUSINESS AUTOMOBILE" LIABILITY INSURANCE

1.1 At its own expense, CONTRACTOR shall obtain, pay for, and maintain— and shall require each of its Subcontractors to obtain and maintain— a "Business Automobile" insurance policy on an ***occurrence*** basis to fully protect CONTRACTOR and CITY from claims and suits for bodily injury, property damage, and medical payments. The policy must add the City of Glendale and its officers, agents, employees, and representatives as ***additional insureds***.

1.2 The insurance must not be written for less than the limits of liability specified below or required by law, whichever coverage amount is greater:

(A) ONE MILLION DOLLARS ($1,000,000) per occurrence for bodily injury (including accidental death) to any one person; and

(B) ONE MILLION DOLLARS ($1,000,000) per occurrence for property damage; or

(C) ONE MILLION DOLLARS ($1,000,000) combined single limit ("CSL").

1.3 The liability insurance must include all major divisions of coverage and must cover all vehicles, whether rented, leased, hired, scheduled, owned or non-owned.

1.4 CONTRACTOR shall provide CITY with a "***certificate of insurance***" and an "***additional insured endorsement***"— on forms satisfactory to the City Attorney or City's Risk Manager, and signed by the insurance carrier or its authorized representative— which fully meet the requirements of, and contain provisions entirely consistent with, all of the Insurance Requirements.

1.5 The "certificate of insurance" and an "additional insured endorsement" must state:

"The City of Glendale, and its officers, agents, employees, and representatives are included as additional insureds under the policy(s). This insurance is primary to all other insurance of the City. The City's insurance, or self-insurance, or both, will apply in excess of— and will not contribute with— this insurance. This insurance applies separately to each insured or additional insured who is seeking coverage, or against whom a claim is made or a suit is brought. The issuing company shall mail thirty (30) days advance notice to the City for any policy cancellation, termination, non-renewal, or reduction in coverage."

GENERAL REQUIREMENTS

1.1 At all times, the insurance company issuing the policy must meet all three of these requirements:

(A) It must be "admitted" insurer by the State of California Department of Insurance or must be listed on the California Department of Insurance's "List of Approved Surplus Line Insurers" ("LASLI");

(B) It must be domiciled within, and organized under the laws of, a State of the United States; and

(C) It must carry a minimum A.M. Best Company Financial Strength Rating of "A:VII," or better.

1.2 If the Agreement requires any of the foregoing insurance coverages to remain in force after the Final Payment, and if they are reasonably available, CONTRACTOR shall submit to CITY— with the final Application for Payment— all certificates and additional insured endorsements evidencing the coverages' continuation.

1.3 A deductible or self-insured retention is subject to CITY's review and approval, in its sole discretion. The insurance company or its authorized representative must state either on the insurance certificate or in a separate correspondence:

(A) The amount of the deductible, or self-insured retention, or both;

(B) Whether a limit of insurance has been lowered by any pending or paid claim; and

(C) The current limit amount, as lowered by the pending or paid claim.

1.4 Despite any conflicting or contrary provision in CONTRACTOR's insurance policy:

(A) If CONTRACTOR's insurance company adds CITY, and its officers, agents, employees, and representatives (collectively, "its representatives") as additional insureds, then for all acts, errors, or omissions of CITY, or its representatives, or both, that insurer shall:

(1) Pay those sums that CITY, or its representatives, or both, become legally obligated to pay as damages; and

(2) Defend— and pay the costs of defending— CITY, or its representatives, or both;

(B) CONTRACTOR's insurance is primary;

(C) Other insurance (whether primary, excess, contingent or self-insurance, or any other basis) available to CITY, or its representatives, or both, is excess over CONTRACTOR's insurance;

(D) CITY's insurance, or self-insurance, or both, will not contribute with CONTRACTOR's insurance policy;

(E) CONTRACTOR and CONTRACTOR's insurance company waive— and shall not exercise— any right of recovery or subrogation that CONTRACTOR or the insurer may have against CITY, or its representatives, or both;

(F) CONTRACTOR's insurance policy applies separately to each insured or additional insured who is seeking coverage, or against whom a claim is made or suit is brought, except that the naming of multiple insureds will not increase an insurance company's limits of liability;

(G) CONTRACTOR's insurance policy applies to a claim or suit brought by an additional insured against a Named Insured or other insured, arising out of bodily injury, personal injury, advertising injury, or property damage; and

(H) CITY is not liable for a premium payment or another expense under CONTRACTOR's policy.

1.5 At any time during the duration of this Agreement, CITY may do any one or more of the following:

(A) Review this Agreement's insurance coverage requirements; or

(B) Require that CONTRACTOR:

(1) Obtain, pay for, and maintain more or less insurance depending on CITY's assessment of any one or more of the following factors:

(a) CITY's risk of liability or exposure arising out of, or in any way connected with, the services of CONTRACTOR under this Agreement;

(b) The nature or number of accidents, claims, or lawsuits arising out of, or in any way connected with, the services of CONTRACTOR under this Agreement; or

(c) The availability, or affordability, or both, of increased liability insurance coverage;

(2) Reduce or eliminate a deductible or self-insured retention as it applies to CITY; or

(3) Obtain, pay for, and maintain a bond (as a replacement for an insurance coverage) from a California corporate surety, guaranteeing payment to CITY for liability, or costs, or both, that CITY incurs during CITY's investigation, administration, or defense of a claim or a suit arising out of this Agreement.

1.6 CONTRACTOR shall maintain the insurance policy without interruption, from the Project's commencement date to the Final Payment date, or until a date that CITY specifies for any coverage that CONTRACTOR must maintain after the Final Payment.

1.7 CONTRACTOR's insurance company or self-insurance administrator shall mail CITY written notice at least thirty (30) days in advance of the policy's or the self-insurance program's cancellation, termination, non-renewal, or reduction in coverage.

1.8 CONTRACTOR shall not allow any insurance to expire, cancel, terminate, lapse, or non-renew. Twenty-one (21) days before its insurance policy's expiration, cancellation, termination, or non-renewal, CONTRACTOR shall deliver to CITY evidence of the required coverage as proof that CONTRACTOR's insurance policy has been renewed or replaced with another insurance policy which, during the duration of this Agreement, meets all of this Agreement's insurance requirements.

1.9 At any time, upon CITY's request, CONTRACTOR shall furnish satisfactory proof of each type of insurance coverage required— including a certified copy of the insurance policy or policies; certificates, endorsements, renewals, or replacements; and documents comprising CONTRACTOR's self-insurance program— all in a form and content acceptable to the City Attorney or City's Risk Manager.

1.10 If CONTRACTOR hires, employs, or uses a Subcontractor to perform work, services, operations, or activities on CONTRACTOR's behalf, CONTRACTOR shall ensure that the Subcontractor:

(A) Meets, and fully complies with, this Agreement's insurance requirements;

(B) Delivers to CITY— for its review, or approval, or both— all insurance policies, certificates, and endorsements that this Agreement requires; and

(C) Furnishes CITY, at any time upon its request, with a complete copy of the Subcontractor's insurance policy or policies for CITY's review, or approval, or both.

1.11 CONTRACTOR's failure to comply with an insurance provision in this Agreement constitutes a breach upon which CITY may immediately terminate or suspend CONTRACTOR's performance of this Agreement, or invoke another remedy that this Agreement or the law allows. At its discretion, CITY may obtain or renew the insurance, and CITY may pay all or part of the premiums. Upon demand, CONTRACTOR shall repay CITY for all sums or monies that CITY paid to obtain, renew, or reinstate the insurance, or CITY may offset the cost of the premium against any sums or monies that CITY may owe CONTRACTOR.

ATTACHMENT E-6

CONTRACTOR'S SUBMITTAL OF CERTIFICATES AND ENDORSEMENTS

1.1 CONTRACTOR shall have its insurance carrier(s) or self-insurance administrator(s) complete and execute the following insurance documents, unless an exception below applies. When CONTRACTOR signs and delivers the Agreement to CITY, CONTRACTOR also shall deliver:

(A) A "certificate of insurance" for each required liability insurance coverage;

(B) An additional insured endorsement for Commercial General Liability coverage or Businessowners Liability coverage and Automobile Liability coverage, unless this Agreement does not require CONTRACTOR to obtain and maintain Commercial General Liability coverage, Businessowners Liability coverage, or Automobile Liability coverage;

(C) A "certificate of insurance" for Workers' Compensation insurance; or

If CONTRACTOR is self-insured for workers' compensation, a copy of the "Certificate of Consent to Self-insure" from the State of California; or

If CONTRACTOR is lawfully exempt from workers' compensation laws, an "Affirmation of Exemption from Labor Code §3700" form;

(D) A subrogation endorsement, "*Waiver of Our Right to Recover From Others*," for Workers' Compensation coverage; and

(E) A complete copy of CONTRACTOR's Professional Liability insurance policy, including all forms and endorsements attached to it.

1.2 CITY will neither sign this Agreement nor issue a "Notice to Proceed" until the City Attorney or City's Risk Manager has reviewed and approved the insurance documents. CITY's decision as to the acceptability of all insurance documents is final. Unless CONTRACTOR obtains CITY's written approval, CITY will not permit or allow a substitution of an insurance policy, or a change in a certificate's or an endorsement's form and content, or both.

INSURANCE OBLIGATION IS SEPARATE FROM INDEMNITY OBLIGATION

2.1 This Agreement's insurance provisions:

(A) Are separate and independent from the indemnification and defense provisions in Article IV of the Agreement; and

(B) Do not limit, in any way, the applicability, scope, or obligations of the indemnification and defense provisions in Article IV of the Agreement.

VERDUGO QUARTERLY REPORTING TOOL – Burbank Affiliate Site

Subgrantee Name/Project Name	
Contract #	
Report Quarter (Q1=July-Sept; Q2=Oct – Dec; Q3=Jan-March; Q4=April-June)	
Contact Name	
Contact email/phone	

The following data is for the Reporting Quarter AND Cumulative

Deliverable	Goal	Quarter Total	Cumulative Total	Remaining	completion % (Cumulative total/Goal)
Basic Career Services	100				
Registered in CalJOBS	100				
Referrals of Clients to VJC- POS	60				
New Business Referrals/Hiring in CalJOBS	12				
Rapid Response Business Identification/Referral in CalJOBS	12				
Rapid Response Meeting Attendance	9				
Referral of RR Clients	open				

List Data on New Businesses Served Below

Business Name	Date of Contact	Business Contact	Service Provided

Office Use Only:	

List Data on Rapid Response Services Provided Below

Business Name	Date of Contact	Business Contact	Date of Layoff	Date Referred to VJC

Office Use Only:	

List Data on Rapid Response Meetings Attended Below

Business Name	Date of Meeting	Meeting Location	Attending Staff	Overview/Notes

Office Use Only:	

List All Coordinated efforts with VJC such as Job Fairs, Job Recruitments, Workshops, Outreach, etc.

Event	Event/Posting Date	Date informed VJC	Activities/Overview of event

Office Use Only:	

EXPENDITURES

Line Item	Budget	Quarter Invoice Amount	Cumulative Expenditure	Budget Balance	% Invoiced
WIOA Adult	$48,500				
WIOA DW	$48,500				
WIOA Rapid Response	$48,500				
TOTAL	$145,500				

Narrative

1. Describe in detail activities conducted by staff for clients and businesses this quarter:

2. Are you on track to meet all goals?
    a. If not, please explain what challenges you face and provide an action plan that will help you meet your goals:
        i. Which goals were not met?
        ii. What is the reason or challenge for not meeting the goal?
        iii. Action plan to mitigate unmet goal:

3. Are there any wins you'd like to share?

OFFICE USE ONLY:

OBSERVATION	RESPONSE	RESOLUTION	STATUS

Workforce Services Continuity Policy

I. Policy

It is the policy of the Verdugo Workforce Development Board (VWDB) to continue providing workforce services during a state of emergency or disaster declared by City, County, State or Federal agencies and/or government. Local, state or national events such as disasters and emergencies, may affect the operations of the Verdugo Jobs Center (VJC), including all co-located partners, subcontractors and subrecipients. The VWDB will remain flexible to accommodate the needs of the community during these events including the use of remote or work-at-home participant activities as allowable by governing regulations and directives and in alignment with this policy. As an essential service, immediate business resumption and continuity of its essential workforce services is the priority of the VWDB in order to address the needs of the Verdugo communities.

II. Scope

This policy specifically addresses the services provided under the Workforce Innovation and Opportunity Act Title I (WIOA I), programs provided under funding from the Los Angeles County, the California Adult Education Program (CAEP), and any other funding source as allowed by governing regulations. This policy may also guide services provided under other grants received by the VWDB.

III. Workforce Services Continuity

Operational changes as a result of these events may include but are not limited to physical closure of offices or resource and meeting rooms, reduction in hours of operation, reduced staffing available on site, and delivery of virtual services. Events might be related to weather, utilities, security, pandemic, fire, natural disaster or local or national emergency or other unforeseen event that impacts daily operations. Given the limitations and technical capabilities that may be present during a disaster, emergency, or other event, processes may be adjusted to continue to deliver workforce services for all grant funded programs, including but not limited to WIOA, Los Angeles County and CAEP, and meet the needs of the affected individuals, families, and businesses.

A. Intake for Individuals

Outreach strategies to individuals will continue through electronic means via phone, text, email blasts, website, and include social media such as Facebook and Twitter. Multiple methods will be used, including outreach through VJC and community partners, postings, and news media/press releases, as needed to ensure easy access to information. As an Equal

Opportunity service provider, the VWDB and VJC will use outreach methods to address the diverse needs of individuals and families, including those individuals with disabilities.

The Intake process will remain flexible in order to meet the needs of the affected individuals who require services. Assuming the facility has been closed due to a disaster or emergency, calls, emails or other contacts made to the VJC for WIOA I services will be routed to the Case Manager on rotation set by the VJC Manager. Case Managers will follow up with individuals within 24 hours; however, same day response is the goal. Individual, face-to-face meetings may be set (if possible and safe to do so) in order to meet individual needs, including disabilities. Staff may also use electronic methods to communicate directly with the individual. Should assigned staff remain in the office during the closure or reduction, individuals will be routed to assigned staff.

B. Career Services

Under the Workforce Innovation and Opportunity Act, basic career services are defined as eligibility determinations, labor market information, initial assessment of skill levels, and job search and placement assistance. Individualized career services include comprehensive and specialized assessments, diagnostic testing, in-depth interviewing and evaluation, individual or group counseling, career planning, and workforce preparation activities.

During the Intake process, the Case Manager will identify immediate needs of the individual in order to provide appropriate information, resources, and determine the services needed such as Career Services and/or Training Services. If the individual wants or needs Career Services, the Case Manager will also determine if Self-Service or Staff Assisted services are needed or desired.

1. <u>Self-Service:</u>

Some individuals prefer to access services for themselves without staff assistance. Self-service activities, such as general information provided about services at the VJC, training providers, and labor market research. Those who select Self-Service, receive an overview and instruction from the Case Manager to facilitate the access to this service. Case Managers provide this instruction via telephone and email messaging and other approved electronic methods. Self-service activities available include:

a. Online community resources,

b. Online labor market information, and

c. CalJOBS for online video workshops, career assessments, resume preparation tool, training and job listings.

2. <u>Staff-Assisted Services:</u>

Staff assisted career services such as initial assessment, comprehensive career assessments, case management, resume assistance, individual job placement assistance, and follow up services, may be provided via telephone, email messaging, or video connectivity (such as FaceTime, Skype, WebEx or any City of Glendale approved application) to enrolled participants (*Please refer to Paragraph III.F, Enrollment & Eligibility*).

a. Hiring events which include job candidate recruitments for employers and Work Readiness workshops such as Interviewing Techniques, may be conducted via a virtual or online platform given the available technical capacity.

b. Multiple methods for delivering Staff-Assisted Services will be used to accommodate the technological limitations of participants as well as those with diverse needs. Whenever possible and safe to do so, face-to-face appointments may be provided to address individual needs, including reasonable accommodations needed for people with disabilities. Face to face appointments will adhere to any guidelines imposed by the City, County, State or Federal rules and requirements.

C. Training Services

Assuming that the disaster or emergency situation has resulted in closure of facilities and/or a "Shelter in Place" Order, enrolled participants that are in the midst of their training activity may continue as follows:

1. <u>Occupational Skills Training:</u>

Participants may continue training activities remotely if the training provider provides online or distance training capability. The participant and training provider are required to provide:

a. List of skill sets or competencies from the training curriculum that will be provided remotely, and

b. Timesheets and progress report on a regular basis, as established by the Case Manager, or

c. If the training provider does not offer online or virtual training capability, the training will be paused and may resume when the training provider resumes operations. Individuals will also be allowed to explore other training options depending on the vendor's ability to provide service.

d. Students should contact their Case Manager if they do not have the technology, connectivity or need assistive technology to participate in a virtual classroom. Case Managers can explore other options including providing supportive services to assist in accessing the technology.

2. <u>Work Experience:</u>

Participants that are enrolled in Work Experience (WEX) may continue working if the employer has established all safety precautions including implementing Federal, State, County and local guidelines (i.e. social distancing) to address the emergency situation, such as a pandemic. Participants whose Work Experience is affected by business closure or reduction of on-site staffing can also continue working if the employer provides remote or work-at-home capability. Remote Work Experience must be preapproved by VJC management and the employer is required to provide to the Case Manager the following:

a. Description of the remote connection and access capability that trainee will use (may be provided by the employer), and

b. List of tasks to be worked on remotely, and

c. A letter explaining how the participant will be supervised while working remotely, and

d. Progress report signed by employer, and

e. Employer's telecommuting policy.

3. <u>On-the-Job Training:</u>

Participants that are enrolled in On-the-Job Training (OJT) may continue working if the employer has established all safety precautions including implementing Federal, State, County and local guidelines (i.e. social distancing) to address emergency situation, such as a pandemic. Participants whose OJT is affected by business closure or reduction of on-site staffing can also continue working if the employer provides remote or work-at-home capability. Remote On-the-Job Training must be preapproved by VJC management and the employer is required to provide to the Case Manager the following:

a. Description of the remote connection and access capability that trainee will use (this may be provided by the employer), and

b. List of tasks to be worked on remotely, and

c. A letter from the employer explaining how the participant will be supervised while working remotely, and

d. Progress report signed by employer, and

e. Employer's telecommuting policy.

4. <u>Youth Work Experience</u>:

Youth participants that are enrolled in WEX may continue working if the employer has established all safety precautions including implementing Federal, State, County and local guidelines (i.e. social distancing) to address emergency situation such as a pandemic. Participants whose Work Experience is affected by business closure or reduction of on-site staffing can also continue working if the employer provides remote or work-at-home capability. Remote Work Experience must be preapproved by VJC management, and for any youth under the age of 18 a school issued work permit will also be required. The youth provider will be required to provide to the VJC with the following documents before a youth can start the work experience:

a. Description of the remote connection and access capability (this may be provided by the employer or youth provider), and

b. List of tasks to be worked on remotely, and

c. A letter from the employer explaining how the participant will be supervised while working remotely, and

d. Progress report signed by employer, and

e. Employer's telecommuting policy, and

f. Work Permit for youth under the age of 18.

5. <u>Continuity of Work-Based Learning</u>

If a WIOA participant was actively being served or in subsidized employment, OJT, WEX, or paid internship, which was cancelled during an emergency event or pandemic such as COVID-19, any WIOA formula or competitive grant can be used to continue paying wages or stipends for the established term if the program participant's time commitment, stipend structure, and/or other academic or work terms were established prior to the national emergency declaration (USDOLETA FAQ).

6. <u>New Participants/Enrollments:</u>

New participants may be enrolled in training or work-based learning with individual assessment of needs, barriers and the availability of the training providers and/or employers that meet the precaution requirements. For those training providers and employers that must close their facilities, new participants may be enrolled if the remote access requirements are met (*Please see requirements noted in Paragraphs III.C.1, 2, 3, 4*).

D. Supportive Services

1. <u>Allowable Supportive Services:</u>

Supportive services may be provided to eligible participants enrolled in participant-level (staff assisted) Career Services and/or Training activities. The need for supportive services is determined by the Case Manager based on the assessment of barriers and other challenges that must be addressed to enable an individual to participate in activities authorized under WIOA Title I, CAEP or other grants. The amount of supportive services, the purpose, and backup documentation needed (i.e. receipt) is determined by the Case Manager based on needs assessment and available funding, and documented in case narrative and/or Individual Employment Plan (IEP) or Individual Service Strategy (ISS) as required by the funding source.

In alignment with WIOA and the Code of Federal Regulations (CFR) which state: *Local Areas **may** establish limits on the provision of supportive services or provide the one-stop center with the authority to establish such limits including a maximum amount of funding and maximum length of time for supportive services to be available to participant (Title 20 CFR Section 680.920), the VWDB is not establishing a cap for supportive services. The maximum allowed is determined by the requirements of the grant providing the funds for supportive service, and as approved by the VJC Manager. All requests for supportive services are submitted to the VJC Manager for approval.*

Supportive services may be funded under WIOA I, CAEP or other grant/funding source, as funding allows or as stipulated by specific grant requirements, and when participants are unable to obtain through other programs or partners, unless otherwise permissible in grant requirements. Supportive services may include but are not limited to:

a. Linkages to community services;
b. Assistance with transportation;
c. Assistance with childcare and dependent care;
d. Assistance with housing;
e. Needs-related payments, as described at §§ 680.930, 680.940, 680.950, 680.960, and 680.970;
f. Assistance with educational testing;
g. Reasonable accommodations for individuals with disabilities;
h. Legal aid services;
i. Referrals to health care;
j. Assistance with uniforms or other appropriate work attire and work-related tools, including such items as eyeglasses and protective eye gear;
k. Assistance with books, fees, school supplies, and other necessary items for students enrolled in postsecondary education classes; and

l. Payments and fees for employment and training-related applications, tests, and certifications.

During disaster and emergency events, eligibility for Supportive Services will remain flexible as allowable under WIOA I, or other governing directive, and in alignment with the VWDB's Workforce Services Continuity Policy. To meet the demands of the emergency event, Supportive Services may include items needed for daily living needs including utilities, healthcare expenses, as well as expenses for technology and supplies needed for working at home, unless otherwise prohibited by grant requirements or directives.

2. <u>Issuing Supportive Services:</u>

Whenever possible, supportive services are issued in the form of a product (i.e. books, supplies) or service (i.e. childcare) and not in the form of cash payments to individuals. All requests for supportive services must be submitted using the Client Request for Supportive Services Form and submitted to the VJC Manager with attached documentation. In some cases, participant may purchase the item and be reimbursed with submission of appropriate documentation (receipt).

a. Documentation may include the bill or invoice for services such as the gas or electric bill. The case file should document the date of service, the vendor (i.e. utility company), justification and the amount to be disbursed.

b. Once the payment has been made, documentation should include a receipt for the payment made. Receipts should be original whenever possible; however, may be scanned or photographed with a cell phone and submitted during emergency events. Receipts should detail the item purchased, vendor name, the date, and the amount (WSIN 19-43).

c. While copies of receipt and self-attestations are allowable during emergency events, in order to expedite services, original receipts will still be required after in-person services resume (EDD FAQ June 26, 2020).

d. If a bill is submitted for payment but the bill has a different name, Case Manager will verify that the address matches that of the participant.

e. Supportive services cannot be charged to a specific grant prior to the start date of the grant.

f. Supportive services cannot be issued prior to the date of enrollment of the participant.

g. Interest payments for mortgages, car loans or related fees cannot be paid with WIOA funds. In addition, late payment penalties and related fees cannot be paid with WIOA funds (2 CFR 200.441 and Section 200.449).

h. Once a participant receives the supportive service, participant will sign and submit the Client Receipt of Supportive Services Form.

Supportive services may be provided to multiple participants within the same household if the specific need has been determined and is fully documented in the Client Request Form and does not duplicate funding for the same service. For example, two parents cannot receive childcare for the same children and the same time period. However, two parents living together may receive transportation assistance if they attend different training programs or attend on different days/times, making it impossible to carpool.

i. Payments made for months prior to grant start date can be paid so long as the payment is issued on or after the grant start date, unless otherwise prohibited by grant requirements or directives. However, late payment penalties and related fees (e.g., service restoration) cannot be paid with WIOA funds per Title 2 Regulations CFR Section 200.441.

E. Stipends and Incentives

A participant may receive a stipend or incentive that enables him/her to participate in participant level career services or training activities. These stipends and incentives may be provided under supportive services (CalJOBS code 183) and may be available to any adult or dislocated worker participant in Title I career services (not including follow-up services) or training activities.

This definition does not include Needs-Related Payments (code 326) and must be provided in conjunction with a career service or training activity. Service dates for the supportive service must be within the dates of the career service or training activity (CalJOBS Activity Codes Dictionary, Revised January 2020).

1. <u>Stipends:</u>

a. Stipends may be issued to a participant to encourage the participation in specific activities including classroom instruction or work experience.

b. Stipends may be paid based on hours of attendance or hours completed in work experience.

c. Participants must submit signed attendance sheet or timesheet documenting the hours completed.

d. Specific activity required documentation and stipend amount must be documented in IEP or ISS.

e. Stipend amounts will be based on available funding or as stipulated in grant or contract requirements.

f. Employer of record will adhere to Internal Revenue Service (IRS) guidelines when compensating youth with a stipend for work experience, including minimum wage requirements. The IRS defines wages in 26 CFR § 3121(a) as all remuneration for employment unless specifically excepted under section 3121(a). An employee and employer relationship is the primary factor in determining whether to pay wages.

g. In cases where work experience is not associated with an employer/employee relationship, such as in a classroom setting or virtual learning environment, a stipend may apply.

2. <u>Incentives:</u>

a. Incentive payments to participants are permitted for recognition and achievement directly tied to education, training and work experiences.

b. Incentive payments must be tied to the goals of the specific program the participant will be enrolled in.

c. The specific incentive including the dollar amount and the timeframe or number of hours will be documented in the ISS.

d. Amounts shall be determined for each program or activity and will be based on available funding or as stipulated in grant or contractual requirements.

e. Incentive payments will be paid in accordance with the requirements contained in 2 CFR part 200.

f. Incentives may be applied for virtual education, training and work experience with appropriate documentation as stipulated in VWDB's Workforce Services Continuity Policy, Section III.C.4.

3. <u>Issuance of Stipends and Incentives During Emergency Events:</u>

During disaster and emergency events, eligibility and amounts for Stipends and Incentives will remain flexible as allowable under WIOA I, grant or sub-grantee agreement, or other governing directive, and in alignment with the VWDB's Workforce Services Continuity Policy.

4. <u>Continuation of Stipends During Emergency Events:</u>

If the program participant's time commitment, stipend structure, and/or other academic or work terms were established prior to the national emergency declaration, the VJC

should continue to pay the participant for the remainder of the established term (USDOLETA FAQ).

F. Needs Related Payments

Funds allocated to a local area for adults and dislocated workers may be used to provide needs-related payments to adults and dislocated workers, respectively, who are unemployed and do not qualify for (or have ceased to qualify for) unemployment compensation for the purpose of enabling such individuals to participate in programs of training services.

1. <u>Dislocated Worker Eligibility for Needs Related Payments:</u>

A dislocated worker who has ceased to qualify for unemployment compensation may be eligible to receive needs-related payments under this paragraph only if such worker was enrolled in the training service:

a. By the end of the 13th week after the most recent layoff that resulted in a determination of the worker's eligibility for employment and training activities for dislocated workers; or

b. If later, by the end of the 8th week after the worker is informed that a short-term layoff will exceed 6 months.

2. <u>Level of Payments:</u>

The level of a needs-related payment made to a dislocated worker under this paragraph shall not exceed the greater of:

a. The applicable level of unemployment compensation; or

b. If such worker did not qualify for unemployment compensation, an amount equal to the poverty line, for an equivalent period, which amount shall be adjusted to reflect changes in total family income.

G. Business Services

Business services will continue during disaster and emergency events to ensure continuity of services. Service delivery may also be modified as needed based on the limitations that result from the events. Primary services to businesses include Rapid Response, Hiring Assistance, and Access to Resources Information.

1. <u>Rapid Response:</u>

During an emergency event, there may be an increase in business closures, employee layoffs or furloughs. All notifications of layoffs and closures are sent to the VWDB Executive Director who will disseminate to the VJC Manager, and the Economic Development Department for the city in which the organization is located.

a. The Rapid Response Coordinator or VJC Manager will contact the business or organization within 24 hours of receiving notification; however, the goal will remain as same day response.

b. Rapid Response Assistance to employers may be provided virtually via phone or online platform such as WebEx, Skype, etc. Information exchange will occur electronically via email or through the VJC website.

c. Rapid Response Assistance to employees will be coordinated through an employer representative such as Human Resources. Orientations may be conducted virtually to ensure social distancing while providing affected workers with information regarding career services, unemployment insurance benefits, supportive services, and services that assist in transitioning them to new or stop gap employment opportunities, as needed. Workers will be encouraged to set Intake appointments with Case Managers by calling the VJC.

d. Rapid Response services will be coordinated and provided in accordance with any regulatory changes or accommodations provided by governing agencies (i.e. Employment Development Department Directives) during emergencies, disasters or other events.

2. <u>Hiring Assistance:</u>

Employers that continue to hire during emergency events, will continue to receive assistance from VJC. Job matching will continue virtually via email, phone, text and online platforms.

a. Hiring events that bring multiple job candidates together for a single or multiple employers will also continue virtually using online platforms such as WebEx or Skype.

3. <u>Access to Resources and Information:</u>

The VJC will continuously update its website to ensure that businesses, organizations and workers are kept informed of resources available, services available and other pertinent information. Case Managers also keep their individual participants and employers informed via email, texts, and phone calls to ensure needed information is immediately available.

H. Enrollment and Eligibility

Case Managers will direct all customers seeking Staff-Assisted Services to complete the CalJOBS WIOA Application and provide supporting documentation (i.e. identify information) to facilitate eligibility determination. Individuals that are determined eligible may be enrolled in WIOA I programs.

3. <u>Supporting Documentation:</u>

VJC Supporting eligibility documents may be collected from the participant via email, text, fax or mail.

a. Confidential information such as Social Security Numbers will not be collected via email due to security issues, but can be collected via fax, mail or text.

b. Federal and state regulations require adequate documentation for determining eligibility and for issuing supportive services. In addition, U.S. Department of Labor (DOL) Employment and Training Administration (ETA) has provided guidance that self-attestation should not be used as a first resort. During emergency events, however, this requirement is relaxed and directives may specifically allow self-attestation for income (as required by a specific grant) and related eligibility determination. Self-attestation is used to expedite needed services during emergency events. Documentation should be requested and filed whenever possible and when it does not impede the provision of emergency services.

   i. For grants that require income eligibility, Unemployment Insurance (UI) benefits are counted as taxable income and should be counted as income. Any additional UI benefits awarded as a result of an emergency event, are also counted as income.

   ii. Stimulus checks or relief checks issued to participants as a result of an emergency event are not considered taxable income and should not be included for income eligibility determination.

   iii. During emergency events, self-attestations can be submitted electronically, hard mail, or verbally for documentation required to determine eligibility for services or supportive service. Written self-attestations that are submitted electronically, via email or hard mail, should fully document the eligibility issue (i.e. layoff) and include dates, names, name of company and position held, and other details to demonstrate the individual meets the eligibility requirement. The document should also include the reason why a self-attestation is needed as opposed to a more specific demonstration of eligibility.

      (a) A self-attestation can be submitted verbally with all of the required details documented in the case file. In addition, case notes must include the date and time of the verbal attestation, as well as the reason for the attainment of a verbal self-attestation.

   iv. While self-attestation is used during emergency events to expedite needed services to participants, every effort should be made to collect supporting documentation once the emergency event is over and in-person services resume.

4. Document Signatures:

The VWDB may temporarily waive the requirement for a wet or electronic signature on all enrollment forms for WIOA Title I and CAEP programs during an emergency event.

Signatures of enrollment documents may be obtained electronically from participants that have necessary technological capability.

a. For participants that do not have access to the internet or computer, printed applications may be mailed for signatures.

b. Participants may use fax, email or mail to return signed documents for enrollment processing.

c. If signatures of enrollment documents are not collectable, a self-attestation of the Applicant Certification Statement may be obtained from a participant via email or verbal.

   i. The self-attestation will verify the date of enrollment and will be documented in case notes.

   ii. This temporary allowance will remove barriers and offer individuals easier access to WIOA services and other grant funded programs.

   Once in-person services resume, the participant may be required to provide wet signatures at that time, if required by the grant or other directive.

   iii. Verbal self-attestation may be accepted to accommodate individuals without access to technology and those with barriers or challenges that require the accommodation (i.e. English Language Learner or disability). A verbal self-attestation for the Applicant Certification Statement must be documented in the case file with a full description of the participant's acknowledgement of the Statement, the date and time of the verbal attestation, as well as the reason for the attainment of a verbal self-attestation. Once operations resume and it is possible to do so, a wet signature will be collected when verbal self-attestation is used.

5. CAEP Eligibility Determination

CAEP only has one requirement for eligibility determination for adult education: student must be an adult, 18 years of age over. No verification of birth date is required.

6. WIOA I Eligibility Determination

The VWDB will maintain flexibility, in alignment with any governing directives that may be issued, in determining eligibility and requiring back-up documentations during disaster and emergency events, with the understanding that access to documents may be challenging for individuals. Whenever possible, the VJC will collect back-up documents and original signatures once the community recovers or emergency event has ended. As a last resort, self-attestation will be used unless prohibited by a specific directive or regulation linked to the funding sources used for enrollment.
In general, the individual must be eligible at the point of enrollment. If their circumstances change, the VJC is not required to re-determine eligibility, unless it is required by the grant or related directive.

Eligibility requirements for enrolling into WIOA I programs will be adjusted as follows:

a. Adults

i. Identity

(a) WIOA program eligible participants must establish their identity by providing a copy of a state issued photo identification card, US passport, permanent resident card, Certificate of Naturalization, or birth certificate.

ii. Authorization to Work

(a) Eligible participants must provide a Social Security Number (SSN) number for CalJOBS Registration and WIOA Title I Application and Participation. Actual copy of SSN document is not required during emergency events.

(b) Authorization to Work Document also requires one of the following:

(1) U.S. Passport or U.S. Passport Card
(2) Permanent Resident Card or Alien Registration Receipt Card (Form I-551)
(3) Foreign passport that contains a temporary I-551 stamp or temporary I-551 printed notation on a machine-readable immigrant visa
(4) Employment Authorization Document that contains a photograph (Form I-766)
(5) For a nonimmigrant alien authorized to work for a specific employer because of his or her status:
a) Foreign passport; and
b) Form I-94 or Form I-94A that has the following:
1) The same name as the passport; and
2) An endorsement of the alien's nonimmigrant status as long as that period of endorsement has not yet expired and the proposed employment is not in conflict with any restrictions or limitations identified on the form.

(6) Passport from the Federated States of Micronesia (FSM) or the Republic of the Marshall Islands (RMI) with Form I-94 or Form I-94A indicating nonimmigrant admission under the Compact of Free Association Between the United States and the FSM or RMI.

(c) Other options for Right to Work Authorization are listed in Attachment I.

(d) Authorization to work documentation is **not** required for Career Services, Self-Service and Staff Assisted Services that do not connect participants to employers.

(e) Authorization to work in the United States is only required for employment services.

(f) When Right to Work Authorizations are not accessible due to disaster or emergency, self-attestations may be used, unless specifically prohibited by a governing directive during emergency events. Self-attestations should provide the identification number whenever possible, and explanation as to why the document is not available. If possible, collection of documentation should occur once the emergency event has concluded.

iii. Selective Service

(a) For males, compliance with Selective Service registration is required (refer to VWDB Selective Service Policy).

(b) During emergency events, documentation/evidence presented for "knowing and willful" failure to register may include the individual's written explanation and supporting documentation (self-attestation) of his circumstances at the time of the required registration and the reason(s) for failure to register. Self-attestation may serve as sufficient evidence when other options of documentation or third-party corroboration are not available.

b. Dislocated Workers:

Dislocated Workers under disaster and emergency events may be eligible due to business or organizational closure, layoff, reduction of at least 10% of work hours or furlough from either subsidized or unsubsidized employment (unless otherwise prohibited by grant requirements or directives.

i. Eligible Dislocated Workers must meet the Adult eligibility requirements listed Section III.F.3.a., AND must provide proof of dislocation such as:

(a) Lay off letter, email or text OR

(b) Unemployment Insurance award letter or UI Online screen shot OR

(c) Media Article OR

(d) Self-attestation letter specifying the date of dislocation and name of business or organization, address, and phone number.

(e) The Unlikely to Return to Previous Occupation requirement for dislocated worker is waived.

c. Low Income Determination:
During an emergency event, determination of low-income status for grants that require low income determination for eligibility or to identify a barrier, the VWDB and VJC will use the definition stipulated in WSIN 19-39:

Individuals have not received wages above 400% of the federal poverty level (FPL) for the last six months of income. Household Annual Salary for 400% FPL is as follows:

- *Family of 1: $51,040*
- *Family of 2: $68,960*
- *Family of 3: $86,880*
- *Family of 4: $104,800*

d. Youth:
Eligible participants must meet Out of School Youth or In School Youth eligibility requirements as specified in the VWDB's WIOA I Program Eligibility Policy.

Employment Eligibility Verification
Department of Homeland Security
U.S. Citizenship and Immigration Services

LISTS OF ACCEPTABLE DOCUMENTS
All documents must be UNEXPIRED

Employees may present one selection from List A
or a combination of one selection from List B and one selection from List C.

LIST A Documents that Establish Both Identity and Employment Authorization	OR	LIST B Documents that Establish Identity	AND	LIST C Documents that Establish Employment Authorization
1. U.S. Passport or U.S. Passport Card		1. Driver's license or ID card issued by a State or outlying possession of the United States provided it contains a photograph or information such as name, date of birth, gender, height, eye color, and address		1. A Social Security Account Number card, unless the card includes one of the following restrictions: (1) NOT VALID FOR EMPLOYMENT (2) VALID FOR WORK ONLY WITH INS AUTHORIZATION (3) VALID FOR WORK ONLY WITH DHS AUTHORIZATION
2. Permanent Resident Card or Alien Registration Receipt Card (Form I-551)		2. ID card issued by federal, state or local government agencies or entities, provided it contains a photograph or information such as name, date of birth, gender, height, eye color, and address		2. Certification of report of birth issued by the Department of State (Forms DS-1350, FS-545, FS-240)
3. Foreign passport that contains a temporary I-551 stamp or temporary I-551 printed notation on a machine-readable immigrant visa		3. School ID card with a photograph		3. Original or certified copy of birth certificate issued by a State, county, municipal authority, or territory of the United States bearing an official seal
4. Employment Authorization Document that contains a photograph (Form I-766)		4. Voter's registration card		4. Native American tribal document
5. For a nonimmigrant alien authorized to work for a specific employer because of his or her status: a. Foreign passport; and b. Form I-94 or Form I-94A that has the following: (1) The same name as the passport; and (2) An endorsement of the alien's nonimmigrant status as long as that period of endorsement has not yet expired and the proposed employment is not in conflict with any restrictions or limitations identified on the form.		5. U.S. Military card or draft record		5. U.S. Citizen ID Card (Form I-197)
		6. Military dependent's ID card		6. Identification Card for Use of Resident Citizen in the United States (Form I-179)
		7. U.S. Coast Guard Merchant Mariner Card		7. Employment authorization document issued by the Department of Homeland Security
		8. Native American tribal document		
		9. Driver's license issued by a Canadian government authority		
		For persons under age 18 who are unable to present a document listed above:		
6. Passport from the Federated States of Micronesia (FSM) or the Republic of the Marshall Islands (RMI) with Form I-94 or Form I-94A indicating nonimmigrant admission under the Compact of Free Association Between the United States and the FSM or RMI		10. School record or report card		
		11. Clinic, doctor, or hospital record		
		12. Day-care or nursery school record		

Examples of many of these documents appear in the Handbook for Employers (M-274).

I. Special Assistance Grants

Eligibility requirement adjustments may be implemented to meet specific Special Assistance Grant requirements.

IV. Procurement

Both the federal and state guidance on procurements refer to the "public emergency provision" (WSD 17-08) which states "Public exigency or emergency resulting in an immediate procurement need waives the requirement for prior approval, however, approval should be sought afterwards to conform of the appropriate use of WIOA funds." In the same state guidance, this provision is one of the conditions that allow for Noncompetitive Proposals. However, depending on the item or service being procured, a Local Board may still need to request prior approval for purchases, in particular, technology or items that exceed $5,000 (WSD 16-16; WSD 17-08).

V. References

- Verdugo Workforce Development Board, WIOA Program Eligibility Policy, Issued October 12, 2018.
- Verdugo Workforce Development Board Selective Services Policy, Issued December 18, 2017.
- Verdugo Workforce Development Board, Local Workforce Development Plan Biennial Modification, 2019.
- State of California Employment Development Department, *WIOA Dislocated Worker Funds for Underserved COVID-19 Impacted Individuals*, Workforce Services Information Notice (WSIN) 19-39, Issued April 2, 2020; Expiration: May 2, 2022.
- State of California Employment Development Department, *Temporary Changes to WIOA Registration and Eligibility Documentation Due to COVID-19* WSIN 19-40, Issued April 7, 2020; Expiration: May 7, 2022.
- State of California Employment Development Department, *CalJOBS^{SM} Gidance Due to COVID-19*, WSIN 19-43, Issued April 20, 2020.
- State of California Employment Development Department, *Pathway to Services, Referral, and Enrollment*, Workforce Services Directive (WSD) 18-03, Issued August 29, 2018.
- State of California Employment Development Department, *WIOA Adult Program Priority of Service,* WSD 15-14, Issued January 22, 2016.
- State of California Employment Development Department, *Allowable Costs and Prior Written Approval,* WSD 16-16, Issued February 21, 2017.
- State of California Employment Development Department, *Procurement of Equipment and Related Services,* WSD 17-08, Issued March 14, 2018.
- State of California Employment Development Department, *WIOA FAQ,* Issued March 25, 2020.

- State of California Employment Development Department, *Workforce Innovation and Opportunity Act Underserved COVID-19 Impacted Individuals Grant-FAQ,* Issued June 26, 2020.
- State of California Employment Development Department, *CalJOBS^{SM} Activity Codes Dictionary,* WSD 19-06 Issued December 27, 2019 and revised January 2020.
- Executive Department State of California, Emergency Declaration, Executive Order N-33-20, Issued March 19, 2020.
- County of Los Angeles Department of Public Health Order of the Health Officer, *Safer at Home Order for Control of COVID-19: Temporary Prohibition of Events and Gatherings of 10 Persons or more, Closure of Non-Essential Business and Areas,* Issued March 19, 2020.
- *Workforce Innovation and Opportunity Act* (WIOA) (Public Law 113-128).
- *Americans with Disability Act Amendment Act of 2008* (ADA) (Public Law 110-325).
- US Department of Labor, Title 20 Code of Federal Regulations (CFR), *WIOA Department of Labor (DOL); Final Rule (WIOA DOL Final Rule*).
- Title 20 CFR 380.920, 930, 940, 950, 960, 970, *Are there limits on the amount or duration of funds for supportive services?*
- Title 2 CFR 200, 200.441, 200.449 *Uniform Administrative Requirements*.
- Title 2 CFR 3121, *Definition of Wages.*
- Title 29 CFR Part 38, *Implementation of the Nondiscrimination and Equal Opportunity Provisions of the WIOA*.
- US Department of Labor, *One-Stop Operations Guidance for the American Job Center Network*, Training and Employment Guidance Letter (TEGL) 16-16, Issued January 18, 2017.
- US Department of Labor, *Vision for the One-Stop Delivery System Under the WIOA*, TEGL 4-15, Issued August 13, 2015.
- State of California Employment Development Department, *WIOA Youth Requirements*, Workforce Services Directive (WSD) 17-07, Issued January 16, 2018.
- US Department of Labor, *Technical Assistance Resources for the Workforce Innovation and Opportunity Act (WIOA) Youth Program*, Training and Employment Notice (TEN) 22-19, Issued April 3, 2020.
- US Department of Labor, *Third Workforce Innovation and Opportunity Act (WIOA) Title I Youth Formula Program Guidance*, TEGL 21-16, Issued March 2, 2017.
- US Department of Labor, *Employment Training Administration Coronavirus (COVID-19) FAQs*, issued April 8, 2020.

- US Department of Labor, *Employment Training Administration Coronavirus (COVID-19) FAQs*, issued April 28, 2020.
- US Department of Labor, *National Dislocated Worker Grant Program Guidance, TEGL 12-19*, issued March 18, 2020.
- US Department of Labor, *WIOA Desk Reference: Supportive Services*, issued June 2017.
- State of California Employment Development Department, *Underserved COVID-19 Impacted Individuals Grant (1187) FAQs*, Issued April 30, 2020.
- State of California Employment Development Department, *Underserved COVID-19 Impacted Individuals Grant (1187) FAQs*, Issued April 30, 2020.

AJCC COMPREHENSIVE AND AFFILIATE/SPECIALIZED CERTIFICATION

EXECUTIVE SUMMARY

This policy provides the guidance and establishes the procedures regarding certification of comprehensive and affiliate/specialized America's Job Center of California[SM] (AJCC) locations. This policy applies to all Local Workforce Development Boards (Local Board), and is effective immediately.

This policy contains all state-imposed requirements.

This Directive finalizes Workforce Services Draft Directive *AJCC Comprehensive and Affiliate/Specialized Certification* (WSDD-218), issued for comment on December 7, 2020. The Workforce Development Community submitted three comments during the draft comment period. A summary of comments, including all changes, is provided as Attachment 4.

This policy supersedes Workforce Services Directive *Certification Process for Comprehensive AJCCs* (WSD16-20), dated June 9, 2017 and Workforce Services Directive Certification Process for Affiliate and Specialized AJCCs (WSD18-11), dated March 14, 2019.

REFERENCES

- *Workforce Innovation and Opportunity Act* (WIOA) (Public Law 113-128) Sections 121(g) and 188
- *Americans with Disability Act Amendments Act of 2008* (ADA) (Public Law 110-325)
- Title 20 *Code of Federal Regulations* (CFR) Sections 678.800 and 679.370(q)
- Title 29 CFR Part 38 *Implementation of the Nondiscrimination and Equal Opportunity Provisions of the WIOA*
- Title 34 CFR WIOA, Joint Rule for Unified and Combined State Plans, Performance Accountability, and the One-Stop System Joint Provisions (WIOA Joint Final Rule)
- Department of Labor (DOL) Training and Employment Guidance Letter (TEGL) 16-16, *One-Stop Operations Guidance for the American Job Center Network* (January 18, 2017)

The EDD is an equal opportunity employer/program. Auxiliary aids and services are available upon request to individuals with disabilities.

- DOL TEGL 4-15 (PDF), *Vision for the One-Stop Delivery System Under the WIOA* (August 13, 2015)
- *California's Unified Strategic Workforce Development Plan 2020-2023* (State Plan)
- WSD19-13, *Selection of AJCC Operators and Career Services Providers* (June 8, 2020)
- WSD18-12,*WIOA Memorandums of Understanding (*April 30, 2019)
- Workforce Services Information Notice WSIN12-43, *New One-Stop Branding – America's Job Center of California Network* (March 15, 2013)

BACKGROUND

The WIOA establishes a framework under which Local Boards are responsible for maintaining a network of high-quality, effective AJCCs. To assist in these efforts, the California Workforce Development Board (CWDB), in consultation with an AJCC Certification Workgroup comprised of state-level partners and Local Board representatives, developed objective criteria and procedures for Local Boards to use when certifying the AJCCs within their Local Workforce Development Areas (Local Area).

The WIOA Joint Final Rule outlines three key requirements for AJCC certification: 1) effectiveness of the AJCC, 2) physical and programmatic accessibility for individuals with disabilities, and 3) continuous improvement. California's certification process is centered on these key requirements and sets a statewide standard of service delivery that ensures all customers consistently receive a high-quality level of service.

To ensure that AJCCs deliver a better experience and continuously improve services for job seekers, workers, and employers, the CWDB in partnership with a workgroup from the Employment Development Department (EDD) developed a streamlined process with this Directive with easier objective criteria and procedures for AJCC certification. The initial certification process was designed with two separate Directives, one for comprehensive AJCCs outlined in WSD16-20 (PDF) and the other for affiliate/specialized AJCCs outlined in WSD18-11 (PDF).

Comprehensive AJCC and affiliate/specialized certifications are due by **November 1, 2021**.

POLICY AND PROCEDURES

In accordance with WIOA Section 121(g), Local Boards must select an evaluation panel(s) to perform an independent and objective evaluation of the AJCCs in their Local Areas once every three years using criteria and procedures established by the CWDB. The Local Board can choose to add additional certification criteria tailored to the needs of their Local Area, but they may not remove or replace any of the federal or state criteria.

Local Boards have maximum flexibility to conduct an AJCC Certification through an on-site, remote/virtual, or desk review evaluation due to COVID-19 and must meet the requirements of this Directive.

The certification process for comprehensive and affiliate/specialized AJCCs will be conducted during Program Year (PY) 2021-22 and take effect January 1, 2022.

Baseline Certification
The Baseline AJCC Certification is intended to ensure that every comprehensive, specialized and affiliate AJCC is in compliance with key WIOA statutory and regulatory requirements. It is important to note that certification is an individualized process; it will not be used to compare or rank one AJCC or Local Board against another AJCC or Local Board.

AJCC Comprehensive
The following requirements must be met in order for a comprehensive AJCC to receive Baseline AJCC Certification (Attachment 1):

1. Each Local Board and partner within the affiliate/specialized AJCC has a signed and implemented Memorandum of Understanding (MOU) with the Local Board meeting the requirements in WSD18-12 (PDF).
2. The AJCC has implemented the board-defined roles and responsibilities of the AJCC Operator and Title I Adult and Dislocated Worker Career Services Provider (i.e., an AJCC Operator and Career Services Provider is in place and functioning within the AJCC).
3. The AJCC complies with equal opportunity for individuals with disabilities in accordance with the ADA, WIOA Section 188, Title 29 CFR Part 38, and all other applicable federal and state guidance.
4. The AJCC meets all regulatory requirements to be considered a comprehensive AJCC as identified in the WIOA Joint Final Rule Section 678.305.

Affiliate/Specialized Baseline AJCC Certification
The following requirements must be met in order for an affiliate/specialized AJCC to receive Baseline AJCC Certification (Attachment 2):

1. Each Local Board and partner within the affiliate/specialized AJCC has a signed and implemented MOU with the Local Board meeting the requirements in WSD18-12 (PDF).
2. The affiliate/specialized AJCC complies with equal opportunity for individuals with disabilities in accordance with the ADA, WIOA Section 188, Title 29 CFR Part 38, and all other applicable federal and state guidance.

AJCC Certification Indicator Assessment
In order to highlight areas where AJCCs can continuously improve their service delivery, the AJCC Certification Workgroup identified seven AJCC Certification Indicators to measure continuous improvement for all AJCCs.

The AJCC Certification Indicators are as follows:

1. The AJCC ensures universal access, with an emphasis on individuals with barriers to employment.
2. The AJCC actively supports the One-Stop system through effective partnerships.
3. The AJCC provides integrated, customer-centered services.
4. The AJCC is an on-ramp for skill development and the attainment of industry-recognized credentials which meet the needs of targeted reginal sectors and pathway.
5. The AJCC actively engages industry and labor and supports regional sector strategies through an integrated business service strategy that focuses on quality jobs.
6. The AJCC has high-quality, well-informed, and cross-trained staff.
7. The AJCC achieves business results through data-driven continuous improvement.

The AJCC Certification Indicator Assessment provides a description of each Certification Indicator along with examples of criteria. The assessment requires a full rationale for each Certification Indicator provided.

The Local Board may establish additional criteria, or set higher standards for continuous improvement than those suggested by the state criteria above.

Local Boards must submit a completed AJCC Certification Indicator Assessment to their Regional Advisor by November 1, 2021.

Continuous Improvement Plan
Once the AJCC Certification Indicator Assessment is completed, the Local Board must use the recommendations and evaluations from the assessment to create a continuous improvement plan for the AJCC.

Since Local Boards oversee the AJCC system within the Local Workforce Development Area, the AJCC Continuous Improvement Plan should be developed locally in coordination with the Local Board, AJCC Operator, and in alignment with the agreed upon goals and objectives within the established Regional and Local Plans and MOUs to drive continuous improvement for the AJCC system. The continuous improvement plan does not need to be submitted with the Baseline Criteria Matrix and the AJCC Certification Indicator Assessment.

Since the goal is for Local Boards to work with each of their comprehensive and affiliate/specialized AJCCs to continually improve and progress within each AJCC Certification

Indicator, all Local Boards must attest to developing the Continuous Improvement Plan with target dates with the AJCC. The Continuous Improvement Plan must be completed by **December 31, 2021**.

Local Boards are encouraged to note the changes that have taken place in the form of virtual services due to COVID-19. Additionally, Local Boards may use the Continuous Improvement Plan to highlight key procedural changes that have occurred as a result of the pandemic and how those changes have been beneficial toward the AJCC's continuous improvement.

Local Board Certification Process

Local Boards may choose to use staff, the AJCC Operator (unless it's the Local Board), a subcommittee, or a neutral third-party to conduct the open, independent evaluation of each comprehensive and affiliate/specialized AJCC. Based on those evaluations, the individual(s) or entity that conducted the independent review can provide recommendations to the Local Board regarding certification status and continuous improvement strategies. It is the Local Board, however, that must officially decide and submit the Baseline Criteria Matrix and accompanying AJCC Certification Indicator Assessment for each of the comprehensive and specialized/affiliate AJCCs in the Local Area.

To avoid potential conflicts of interest, the entity that conducts the evaluations cannot be an AJCC program partner staff or the Title I Adult and Dislocated Worker Career Services Provider. If a Local Board contracts out with a provider to serve as both the AJCC Operator and the Title I Adult and Dislocated Worker Career Services provider, that entity is also not allowed to conduct the evaluation.

However, if a Local Board has been approved by the Governor to also act as the Title I Adult and Dislocated Worker Career Services Provider, Local Board staff may conduct the evaluation so long as there are clear and strong firewalls in place that separate the Local Board staff who work in the AJCCs from the Local Board staff who would be conducting the evaluations of those AJCCs. In this case, the CWDB may request additional information and documentation from the Local Board to verify that the firewalls are substantive enough to remove any potential conflicts or biases.

The Local Board must also retain adequate supporting documentation of their certification determination for each AJCC. This includes, but is not limited to, ADA compliance monitoring reports, MOUs, procedure manuals, questionnaires, surveys, interview notes from customers, partners, or staff, and performance information that was used during the certification process.

Certification documentation may be requested by the DOL, the CWDB, or the EDD in order to substantiate a certification decision.

Although not required, AJCC staff may want to conduct an initial self-assessment prior to the Local Board's evaluation. A self-assessment is a helpful tool that can assist the AJCC in

addressing potential compliance issues or areas of improvement prior to the Local Board's certification decision. As a self-assessment is not an independent and objective evaluation it cannot be used in lieu of the Local Board's (or official designee's) evaluation.

CWDB Certification Process
As required by the WIOA Joint Final Rule Section 678.800, when a Local Board is approved by the Governor to also serve as the AJCC Operator, the CWDB must certify the AJCC(s) where the Local Board is the AJCC's Operator. Prior to the CWDB's certification process, the Local Board must conduct an initial self-assessment for certification for all of its comprehensive and affiliate/specialized AJCCs using the Baseline Criteria Matrix and complete an AJCC Certification Indicator Assessment.

The Local Board must submit the Baseline Criteria Matrix, and the AJCC Certification Indicator Assessment by November 1, 2021. The CWDB will review certification packets for the certification status of each comprehensive and affiliate/specialized AJCC by December 17, 2021.

Submissions
Local Boards must electronically submit their Baseline Criteria Matrix and AJCC Certification Indicator Assessment via email to their Regional Advisor.

The Local Board Director must sign both the Baseline Criteria Matrix and AJCC Certification Indicator Assessment to attest to the Local Board's approval of each comprehensive and affiliate/specialized AJCC's certification level and agreement to develop a Continuous Improvement Plan with target dates with the AJCCs.

ACTION

Bring this Directive to the attention of all relevant parties.

INQUIRIES

If you have any questions, contact your assigned Regional Advisor.

/s/ JAIME L. GUTIERREZ, Chief
Central Office Workforce Services Division

Attachments:

1. Comprehensive AJCC Certification Baseline Criteria Matrix (DOCX)
2. Affiliate/Specialized AJCC Certification Baseline Criteria Matrix (DOCX)
3. AJCC Certification Indicator Assessment (DOCX)
4. Summary of Comments (DOCX)

STAFF REPORT

WATER AND POWER

DATE: October 14, 2025

TO: Justin Hess, City Manager

FROM: Mandip Kaur Samra, General Manager, Burbank Water and Power
VIA: Riad Sleiman, Chief Assistant General Manager Riad Sleiman
BY: Sven Knauth, Senior Electrical Engineer

SUBJECT: Authorize the General Manager of Burbank Water and Power to Enter into an Electrical Services Agreement with SJ4 BURBANK, LLC

RECOMMENDATION

Approve and authorize the General Manager of Burbank Water and Power (BWP) to:

1. Execute an Electrical Services Agreement (Agreement) with SJ4 BURBANK, LLC (Developer) (Attachment 1), subject to review and approval by the City Attorney's Office, with reasonable changes in form and substance satisfactory to the City Attorney's Office, if required;
2. Execute any other ancillary documents, including amendments, in form and substance satisfactory to the City Attorney's Office and up to an amount available within any City Council (Council) - approved Fiscal Year (FY) Budget; and
3. Accept all Aid-in-Construction (AIC) payments needed to provide electric service to the project under this Agreement or any other AIC letters or agreements related to the Project.

BACKGROUND

The Developer is constructing a mixed-use residential complex (the "Project") on the property located at 777 Front St., Burbank, California. The Developer presented preliminary plans to the City of Burbank (City) to develop the project with a new electrical demand below 5 MVA. Per Project 17-0001265 (Development Review, Tentative Tract Map No. 74896, Planned Development No. 17-1, and Development Agreement), condition of approval #211, the development is required to construct two underground 12kV feeders to the site as part of the requirement to serve ("Required Infrastructure"). A

portion of the Required Infrastructure construction involves a new underground railroad crossing, which is experiencing delays. These delays pose a risk to the timely energization of Phase 2 of the development pending resolution. An alternate solution was presented to allow for a temporary, limited capacity overhead connection to the development until permanent construction of the Required Infrastructure.

DISCUSSION

The proposed alternative provides a benefit to the Developer by allowing temporary, limited capacity overhead service to feed a portion of the development for energization while the Required Infrastructure is being constructed as required by the Development's conditions of approval and BWP Rules and Regulations. The Developer is fully responsible for all costs associated with the temporary solution. The proposed agreement provides assurance to BWP that the Required Infrastructure will be completed, while allowing the Developer to complete their project construction and make new residential units available.

The agreement between the City and the Developer details the process for the temporary energization, the Developer's obligation to install the Required Infrastructure, and the AIC payments due to the City.

ENVIRONMENTAL REVIEW

The existing project at 777 Front St. completed the California Environmental Quality Act (CEQA) review as part of the Project approval, and no significant change to the project is proposed as part of this agreement. Before the commencement of each "project," staff will determine if it has the potential to result in a direct or indirect physical change to the environment and if it is subject to the requirements of the CEQA.

FISCAL IMPACT

The Developer is fully responsible for all costs related to this Project. The total AIC cost for this project is estimated at $7,485,990.30, which includes onsite and offsite distribution, some offsite portions of the Required Infrastructure that the developer asked for BWP assistance in building, metering, offsite capacity charge, engineering, and related costs needed to serve the project. There are no additional costs incurred by the City. Funds for this work are available in the Council-approved BWP Budget for FY 2025-26 within the Electric Fund (496).

CONCLUSION

Entering into an agreement with the Developer will allow the Developer to continue making progress towards bringing new residential units to the market while issues in constructing the Required Infrastructure for permanent power are resolved. Additionally, the agreement provides assurance to BWP that the Required Infrastructure will be completed as a condition of the project and sets expectations for costs, division of

responsibility, and potential limitations of the temporary overhead feed.

ATTACHMENT

Attachment 1 – Electrical Services Agreement

RECORDING REQUESTED BY
AND WHEN RECORDED,
MAIL TO:

City Clerk
City of Burbank
P. O. Box 6459
Burbank, CA 91510

Space Above This Line for Recorder's Use

ELECTRICAL SERVICES AGREEMENT

This ELECTRICAL SERVICES AGREEMENT ("**Agreement**") is entered into on _____, 2025 (the "**Effective Date**"), by and between XXX, (together with any of its permitted successors and assigns, "**Developer**"), and THE CITY OF BURBANK, CALIFORNIA (the "**City**") ACTING THROUGH BURBANK WATER AND POWER ("**BWP**"). Developer and the City shall be each referred to herein as a "Party" and collectively as the "Parties".

A. Developer is constructing a mixed-use residential complex (the "**Project**") on the property located at 777 Front St., Burbank, County of Los Angeles, California which is more particularly described in **Exhibit A**, Legal Description, attached hereto and incorporated herein by this reference (the "**Property**"). All parcels owned by the Developer as identified on **Exhibit D**, attached hereto and incorporated herein by this reference, shall be referred to herein collectively as the "**Development".**

B. Developer presented preliminary plans to the City to develop the Project with new electrical demand below 5 MVA. Per Project 17-0001265 (Development Review, Tentative Tract Map No. 74896, Planned Development No. 17-1, and Development Agreement) condition of approval #211, the development is required to construct two (2) underground 12kV feeders to the site as part of the requirement to serve ("**Required Infrastructure**").

C. Per Project 17-0001265 condition of approval #221, all substructure work including transformer pads, switch pads, pull boxes, grounding systems, primary conduits and secondary conduits are the responsibility of the developer ("Substructure Work") and shall be done in accordance with BWP drawings and specifications. Substructure Work is a necessary component of the Required Infrastructure. Developer has investigated and requested, in its own discretion, that offsite Substructure Work be performed by the City and has acquired the City's assistance in its completion. Developer acknowledges their obligation to Project 17-0001265 condition of approval #221 and has paid Aid-in-Construction (AIC) deposits for the City to assist in completing such work.

D. Developer acknowledges that, in order for the City to provide Electric Service to the Project, pursuant to the BWP Rules and Regulations, Developer must pay for the total cost for the Required Infrastructure from a substation to the Service Points (defined below). As a preliminary step towards construction of the Required Infrastructure, Developer has agreed to pay the City a deposit (the "Deposit"). The Deposit paid is Six Million, One Hundred Ninety-Three Thousand, Five Hundred Seventy-Seven Dollars ($6,193,577), in the form of an Aid-in-

Construction. Developer acknowledges that additional AIC is outstanding and must be paid prior to the full energization of the 700 N Front St building (Phase 2).

E. A portion of the Required Infrastructure construction is experiencing delays which places Phase 2 of the Development at risk of not being energized until a resolution is finalized. An alternate solution was presented to allow for the temporary connection to the Development until permanent construction of the Required Infrastructure.

F. This alternative provides a benefit to the Developer by allowing temporary, limited capacity overhead service to feed a portion of the Development for energization while the Required Infrastructure is being constructed as required by the Development's conditions of approval and BWP Rules and Regulations.

G. Developer acknowledges that alternative solution costs are solely their responsibility, and such alternative solution has limitations and does not alleviate the Developer from the complete construction of the Required Infrastructure.

H. Developer desires that the City provide temporary metering energization for the purpose of testing facilities at each metered residential complex. The City shall use good faith effort to install the metering and provide a 60 calendar day window for the general testing of facilities and inspections ("Metering Grace Period"). After Temporary Certificate of Occupancy is issued or Metering Grace Period has elapsed, whichever is less, the City shall de-energize electric service at the meters until the earlier of the following: 1) The Required Infrastructure that will traverse under the railroad is completed and energizing the Service Point or 2) The Temporary Power to the Service Point is energized. Developer agrees to pay for the temporary metering energization and subsequent disconnection effort described, due within 30 days of Agreement execution.

I. In the event, the Required Infrastructure experiences a major delay or setback, Developer desires that the City provide, and the City shall use good faith efforts to provide, temporary electric power ("Temporary Power") by using an overhead 12.47kV distribution line (the "Temporary Distribution Line") to cross the railroad tracks, and installing related required conductor and equipment to connect to the Project at the service point at 777 Front St. Street ("Service Point") as soon as reasonably possible, with a target completion of 30 working days after required Developer's temporary substructure work completion and successful inspection by the City. Developer acknowledges that Temporary Power is being installed for Phase 2 and is not designed to carry the full load of the development. This may cause extended outages, extended restoration times, and limited electric capacity due to limited redundancy in the electric feed to the Development.

J. As a preliminary step towards construction of the Temporary Distribution Line and temporary metering energization for testing, Developer has agreed to pay the City an amount in addition to the Deposit in the amount of Sixty-Two Thousand, Five Hundred Dollars ($62,500) (the "Temporary Distribution Deposit"), due when Developer requests Temporary Power.

NOW, THEREFORE, in consideration of the mutual promises contained herein and for other good and valuable consideration, the receipt and sufficiency of which are hereby acknowledged, and intending to be legally bound hereby, the Parties covenant and agree as follows:

1. <u>Developer's Load; Service Points on Property</u>.

(a) Total Load. Any designs, plans and/or other development documentation included with each design submitted to the City by Developer (collectively, the "**Developer's Documentation**") must indicate that Developer's switchgear capacity for the Project (the "**Developer's Load**") is below 5 MVA. Per Project 17-0001265 condition of approval #211, the calculated load demand will be based on 65% of the panel capacity of 80% rated panels or 80% of the panel capacity for fully rated panels. If changes are made to the design that would cause the demand load to increase above 5 MVA, a separate substation agreement would be required prior to energization of service.

(i) Installation, Replacement, or Upgrade of Electric Metered Panels. In the event a metered electrical panel is to be installed, replaced, or upgraded on the Development after the City's electric permit for the Temporary Power has been finalized, the capacity of the replacement panel shall be subject to Project 17-0001265 condition of approval #211.

(b) Service Points. The Service Points for the conduit and wiring to serve the Property when constructed will be as indicated on **Exhibit B**.

2. Total Costs and Fees for the Distribution Facilities.

(a) Costs. The estimated costs are set forth below:

(i) *Total Required Infrastructure Costs.* The estimated total costs for the city constructed portion of the Required Infrastructure, including offsite Substructure Work constructed by BWP but not including onsite Substructure Work constructed by Developer, up to the Service Points shall include, but not be limited to, costs for the design, engineering, procurement, substructure construction (including conduit system, manholes, street resurfacing) cable installation, project management, testing and commissioning of the Required Infrastructure, together with any contracts or sub- contracts with third parties to provide or perform such work and materials (collectively, the "Total Required Infrastructure Costs"). Developer is responsible for the construction and the costs of all substructure, including conduit system, manholes, and street resurfacing required to serve the Development. The Parties hereby acknowledge and agree the Total Required Infrastructure Costs are estimated to be $7,305,901 as of the third quarter of 2024.

(ii) *Temporary Distribution Line Costs.* In the event the Required Infrastructure that traverses under the Railroad is further delayed and Developer requests to proceed with the Temporary Distribution Line installation, the estimated total costs for the commissioning of the Temporary Distribution Line up to the Service Points shall include, but not be limited to, costs for the design, engineering, procurement, pole installation, substructure inspection (including conduit system, manholes, street resurfacing), cable installation, project management, testing and commissioning of the Temporary Distribution Line, together with any contracts or sub- contracts with third parties to provide or perform such work and materials (collectively, the "Temporary Distribution Line Costs"). Developer is responsible for the construction and the costs of the substructure, including conduit system, manholes, and street resurfacing. The Parties hereby acknowledge and agree the Temporary Distribution Line Costs are estimated to be $62,500.00 as of the second quarter of 2025. The Developer shall pay the Temporary Distribution Line Costs prior to any Temporary Distribution Line work by the City.

(iii) *Temporary Metering Lock-Out Costs.* The estimated total costs for the commissioning of temporary electric meters shall include, but not be limited to, costs for the design, engineering, procurement, installation and removal of the temporary electric meters until

temporary or permanent power distribution has been established (collectively, the "Temporary Metering Lock-Out Costs"). Developer is responsible for obtaining necessary permitting, inspections and meter releases from the Building Division. All home run conduits to their respective units must be completed prior to BWP installing the temporary electric meters. The Parties hereby acknowledge and agree that the temporary electric meters will be installed with the disconnect in the closed-energized position for a period of 60 calendar days , after which all meter disconnects shall be switched to the open-disconnected position. The Parties also herby acknowledge and agree that customers may not sign up for service and energize the respective units until Temporary Distribution Line or Required Infrastructure has been installed and is energizing the Service Point. Temporary Metering Lock-Out Costs are estimated to be $35,250.00 as of the second quarter of 2025, this amount is in addition to the meter installation cost estimate included in previous Aid-in-Construction letters issued for the project.

(iv) The actual Total Required Infrastructure Costs and Temporary Distribution Line Costs shall be tracked by the City, and Developer shall be invoiced for any amount spent in excess of the estimated collected amounts (the "**Cost True-up**"), no later than ninety (90) days after completion of BWP's scope of work and no additional charges being incurred or outstanding . Developer shall be issued a refund for any amounts not spent of the Total Required Infrastructure Costs, Temporary Metering Lock-Out Costs, and Temporary Distribution Line Costs within ninety (90) days after the Final Completion Date in Section 5 below.

(b) Developer Fees.

(i) Developer agrees and acknowledges that it shall pay to the City the sum of the Total Required Facilities Costs and Temporary Distribution Line Costs in the form of aid-in-construction payments ("**AIC Payments**").

(ii) The City agrees that Developer will not be required to make AIC Payments in excess of the Total Required Infrastructure Costs, Temporary Metering Lock-Out Costs, Temporary Distribution Line Costs and Cost True-up in order for the City to complete the Required Facilities and Temporary Distribution Line; provided, that Developer shall still be required to pay any other customary fees necessary to develop and energize the Property, including permits and application fees.

3. AIC Payments.

(a) Delivery of AIC Payments. Developer agrees to irrevocably deposit the balance of the AIC Payments, including the Temporary Distribution Deposit, in immediately available funds denominated in United States currency, with the City, within the timeframe described in Section 5. Developer acknowledges and agrees that the AIC Payments shall have no right to any interest accrued by the AIC Payments and shall be held as cash without any investment.

(b) Exclusivity of Deposit and AIC Payments Funds; Non-Refundable. The City agrees to not commingle the Deposit nor AIC Payments with any other amounts held on behalf of Developer or any other party. The City acknowledges that the Deposit and AIC Payments are for the sole and exclusive purpose of paying for a portion of the costs as Aid-in-Construction (as defined in the BWP Rules and Regulations) necessary to providing Electric Service to the Property for the Developer's load.

4. Payment Milestones. The City will invoice Developer in accordance with the schedule set forth herein and Developer shall pay such invoices within thirty (30) days of receipt of such invoice.

The City shall invoice Developer thirty (30) days prior to each of the payment dates set forth in Section 4(a) below. Developer's obligations to make payments on the dates are as set forth below.

(a) (i) Estimated due dates. Payments shall be made on the below dates subject to the City using good faith diligent efforts to complete the work under this Agreement:

Milestone	**Amount**	**Estimated Due Date**
Temp Metering Lock-Out Costs	$35,200	Paid prior to Agreement Execution
Phase 2 AIC payment	$1,112,324 (est.)	Before phase 2 re-energization
Cost True-Up		90 Days after BWP's Scope of Work is complete
Temp Distribution Line Cost	$62,500	TBD

(a)(ii) Deposit. As of the execution of this Agreement, Developer has paid $6,311,166.31 in AIC deposits as follows:

Deposit	**Amount**
Engineering Deposit	$10,000
Temp power overhead	$1,714.31
Temp power overhead, 2nd service	$12,525
Temp power construction	$68,100
Transformer Order	$575,000
Lake St Work	$518,577
Lake to Front St Work	$1,846,000
Phase 1 partial payment	$3,244,000
Temporary Metering Lock-Out Costs	$35,250

5. Scheduled Completion Date. The City shall use commercially reasonable efforts to install electric meters and make distribution feeders from a substation available for energization of Temporary Distribution Line at the Service Point to the Property by 30 working days after agreement execution (the "**Temporary Completion Date**"), provided that Developer completes all required onsite and offsite substructure work necessary for the City's construction, provides the City the safe and clear access necessary to commence onsite work, completes all plans and designs

necessary for the construction of the offsite work, and that all substructure construction necessary for the Temporary Distribution Line is completed a minimum of 60 days prior to the Temporary Completion Date. The anticipated "**Final Completion Date**" is currently unknow since such date may be adjusted based on a number of factors that may impact the design, construction and implementation and is contingent on third party involvement, including railroad permitting, which is currently delaying the work.

6. Risk of Planned Railroad Crossing. Developer acknowledges and agrees that the planned railroad crossing, as designed by Developer and being an integral part of the Required Infrastructure, is still subject to review, approval, and permitting by several third party agencies including but not limited to the City, Los Angeles County Metropolitan Transportation Authority, Southern California Regional Rail Authority, and the Los Angeles County Flood Control District and that there are unknown risks to obtaining such approval. Should an issue be identified that makes construction of the planned railroad crossing, as designed or with reasonable modifications, not feasible or unable to be permitted, an alternate crossing design or route may be required. Developer agrees that, per Project 17-0001265 condition of approval #221, they are responsible for all costs for the Required Infrastructure including any potential alternate designs to complete the construction of the Required Infrastructure. Further Developer agrees to deposit with City additional AIC to cover the costs to resolve any identified major conflicts within 30 days of invoice by City.

7. Certificate of Occupancy contingent on Required Infrastructure. Developer acknowledges and agrees that the City will not issue a final Certificate of Occupancy until developer complies with all project conditions of approval, including completed construction of the Required Infrastructure. If the preferred Required Infrastructure design as currently planned is not feasible to construct developer acknowledges that an alternate design may be required and that costs for such design may be higher than the current estimate. Developer agrees to deposit with City AIC to cover the estimate plus 20% contingency of such an alternate design if required.

8. Does Not Constitute Project Approval. Developer acknowledges and agrees that the City's approval of this Agreement does not constitute, and will not provide any assurance of, the City's approval of the Project, any budget approvals relating thereto, the Developer's Documentation applications, the environmental review or any other item relating or arising out of the Project or any portion thereof. The City shall not be liable to the Developer under this Agreement for failure to approve any such items. This Agreement does not provide Developer any vested rights in Electric Service.

9. Representations and Warranties. Developer represents and warrants to the City that:

(a) Developer is duly organized, validly existing and in good standing under the laws of the jurisdiction of its formation and has full power to execute, deliver and perform this Agreement.

(b) The execution, delivery and performance of this Agreement have been and remain duly authorized by all necessary joint powers authority action and do not contravene the Developer's constitutional documents or any contractual restriction binding on the Developer or its assets.

(c) This Agreement constitutes the legal, valid and binding obligation of the Developer enforceable against Developer in accordance with its terms, subject, as to enforcement, to bankruptcy, insolvency, reorganization and other laws of general applicability relating to or affecting creditor's rights and to general equity principles.

(d) The execution and delivery by Developer of this Agreement does not, and the performance by Developer of its obligations hereunder (with or without the giving of notice or lapse of time or both) will not, directly or indirectly, (a) violate any applicable law or any provision of any security issued by Developer, (b) conflict with, result in a breach of the provisions of or constitute a default under any of the organizational documents of Developer, (c) violate any other agreement, instrument or undertaking to which Developer is a party or by which it or any of its property is bound or (d) require any license, consent or approval of any governmental authority.

10. Miscellaneous.

(a) Notices. All notices, advice and other communications under this Agreement shall be made in writing and given by overnight delivery, fee prepaid, via any reputable overnight courier service with national reputation and a reliable tracking system. Notices and advices are to be addressed to each party as provided below and shall be deemed to have been duly given when received or when delivery is refused (as the case may be) as indicated on the business records of such overnight courier service. Each party may establish a new address from time to time by written notice to the other given in accordance with this Section. Notice to outside counsel designated by a party entitled to receive notice is for convenience only and is not required for notice to a party to be effective in accordance with this Section.

Address for Developer:

XXX
Address Street name
City, State, Zip code
Attn:
Email

Address for the City:

City of Burbank
Burbank Water and Power
164 W. Magnolia Blvd.
Burbank, CA 91502-1720
Attn:_____
Email: _____

With a copy to:

City of Burbank
City Attorney's Office
275 East Olive Avenue
Burbank, CA 91502
Attn: BWP Counsel
Telephone: 818-238-5702
Fax No.: 818-238-5724

(b) Entire Agreement; Modification. This Agreement sets forth the entire agreement between the Parties with respect to the subject matter hereof and supersede all prior discussions, representations, communications and agreements (oral and written) by and among the Parties with respect thereto. Neither this Agreement nor any terms hereof shall be waived, modified, supplemented or terminated in any manner whatsoever, except by a written instrument

signed by all Parties and then only to the extent expressly set forth in such writing. If there is a conflict between this Agreement and BWP's Rules and Regulations regarding the rights and obligations set forth in this Agreement, this Agreement shall control.

(c) Binding Effect. The terms and provisions of this Agreement shall be binding upon and inure to the benefit of the parties hereto and their respective heirs, executors, legal representatives, successors, and assigns, whether by voluntary action of the parties or by operation of law.

(d) Duplicate Originals; Counterparts. This Agreement may be executed in any number of counterparts, including facsimile counterparts, with the same effect as if all signing parties had signed the same document. All counterparts shall be construed together and constitute the same instrument.

(e) Revision and Severability. If any provision of this Agreement is held by a court of competent jurisdiction to be unenforceable, then such provision will be modified to reflect the Parties' intention. All remaining provisions of this Agreement shall remain in full force and effect.

(f) Assignment; Subdivision. Developer shall not assign this Agreement without the prior written consent of the City, such consent not to be unreasonably withheld, delayed or conditioned. Notwithstanding the foregoing, this Agreement shall be binding on any successor owner of the Property. In the event Developer subdivides the Property in accordance with its rights under the Development Agreement, the Developer and City shall use commercially reasonable efforts to enter into such amendments or replacement agreements of this Agreement to ensure that the intended rights and obligations described hereunder shall be preserved.

(g) Ambiguity; Headings and Construction of Certain Terms. The Parties agree that this Agreement shall be construed and interpreted according to the ordinary meaning of the words used so as to accomplish fairly the purposes and intentions of the Parties. Words used in this Agreement may be used interchangeably in singular or plural form, and any pronoun shall be deemed to cover all genders. Section headings are for convenience only and shall not be used in interpretation of this Agreement. "**Herein**," "**hereof**" and "**hereunder**" and other words of similar import refer to this Agreement as a whole and not to any particular section, paragraph or other subdivision; and "**Section**" refers to the entire section and not to any particular subsection, paragraph or other subdivision.

(h) No Dedication. Any undertaking by one Party to the other Party under any provisions of this Agreement shall not constitute the dedication of the City of Burbank's electric system or any portion thereof to the public or to Developer (including its successors, assigns, licensees, customers, invitees, licensees, tenants, lessees, subtenants, concessionaires, officers, employees or agents).

(i) Limitation of Liability. In no event and under no circumstances shall one Party be liable to the other Party for any principal, interest, loss of anticipated revenues, earnings,

profits, increased expense of operation or construction, loss by reason of shutdown or non-operation due to late completion or otherwise for any other economic, consequential, indirect or special damages. The City makes no representations or warranties to Developer.

(j) Force Majeure. Delay in the performance or non-performance in whole or in part by the City is not a breach of its duty or obligations under this Agreement if such performance has been made impracticable by a Force Majeure. The term "**Force Majeure**" includes, but is not limited to, war, flood, lightning, drought, earthquake, fire, volcanic eruption, landslide, hurricane, cyclone, typhoon, tornado, explosion, civil disturbance, an act of God or the public enemy, terrorist act, military action, epidemic, famine, plague, action of the court or public authority (including imposition of tariffs), strike or go-slow or similar labor difficulty.

(k) Limitation on Remedies; Limitation on Liability. In the event that the City cannot make the energization of the distribution feeders available at the Service Points on or prior to the Temporary Completion Date, Developer acknowledges that its sole remedy for such failure is for specific performance by the City to provide sufficient electrical capacity for the Developer's Load from any other substation. In no event and under no circumstances shall the City be liable to Developer for any principal, interest, loss of anticipated revenues, earnings, profits, increased expense of operation or construction, loss by reason of shutdown or non-operation due to late completion or otherwise for any other economic, consequential, indirect or special damages.

(l) No Third-Party Beneficiaries. This Agreement does not and is not intended to confer any rights or remedies upon any person other than the Parties.

(m) Governing Law; Jurisdiction. To the extent permitted by applicable law, this Agreement shall be governed by the laws of the State of California (without giving effect to its conflicts of law rules).

[Signature Page and Acknowledgements Follow]

IN WITNESS WHEREOF, the parties hereto have executed this Agreement as of the date first above written.

DEVELOPER:

XXX,

By: _____

Name:_____

Title:_____

Authorized Signatory

CITY:

CITY OF BURBANK

By:_____

Name:_____

Title: _____

A notary public or other officer completing this certificate verifies only the identity of the individual who signed the document to which this certificate is attached, and not the truthfulness, accuracy, or validity of that document.

STATE OF _____)
) ss.
COUNTY OF _____)

On _____ before me, _____, Notary Public, personally appeared _____, who proved to me on the basis of satisfactory evidence to be the person(s) whose name(s) is/are subscribed to the within instrument and acknowledged to me that he/she/they executed the same in his/her/their authorized capacity(ies), and that by his/her/their signature(s) on the instrument the person(s), or the entity upon behalf of which the person(s) acted, executed the instrument.

I certify under PENALTY OF PERJURY under the laws of the State of California that the foregoing paragraph is true and correct.

WITNESS my hand and official seal.

_____

Notary Public (Seal)

Exhibit A

LEGAL DESCRIPTION

THE LAND REFERRED TO HEREINBELOW IS SITUATED IN THE CITY OF BURBANK, COUNTY OF LOS ANGELES, STATE OF CALIFORNIA, AND IS DESCRIBED AS FOLLOWS:

PARCEL DESCRIPTION:

APN:

Address:

Exhibit B

Service Points

(GIS map showing Service Points.)

Exhibit C

GIS Map of Development (in red)

STAFF REPORT

COMMUNITY DEVELOPMENT

DATE: October 14, 2025

TO: Justin Hess, City Manager

FROM: Patrick Prescott, Community Development Director
VIA: Simone McFarland, Assistant Community Development Director
BY: Mary Hamzoian, Economic Development Manager

SUBJECT: Acceptance of Public Comment on the Proposed Renewal of the Burbank Tourism Business Improvement District

---

RECOMMENDATION

Accept Public Comment on the Proposed Renewal of the Burbank Tourism Business Improvement District (TBID).

BACKGROUND

In 2011, City Council (Council) established Burbank's TBID to market and promote Burbank and its hotels as a desirable national and international destination. The TBID has successfully operated for more than 14 years and is currently requesting to renew the district for a new 10-year term. On September 9, 2025, City Council (Council) adopted a Resolution of Intention (Resolution) to Renew the TBID. The September 9th Staff Report is included as Attachment 1. The Resolution set a time, date and place for two additional meetings, a public hearing to hear testimony on renewing the TBID for October 14, 2025, and a final public hearing for the Resolution of Formation for November 18, 2025.

DISCUSSION

The purpose of this public hearing is to provide an opportunity for members of the community to submit public comment on the proposed renewal of the TBID. The only action required by Council at this time is to accept any public comment submitted.

TBID Renewal Process

For the TBID renewal process to begin, a majority of Burbank hotels representing more

than 50% of the total districts assessment must have signed a petition in favor of the renewal. A total of 14 hotels, representing 91.33% of the total district assessments have signed a petition in favor of renewing the TBID (Attachment 2). Burbank's lodging business[1] owners have elected to pursue renewal of the TBID to continue a stable revenue source devoted to marketing Burbank as a tourist, meetings, and events destination. This overwhelming support from the hotels provides Council the opportunity to continue the district renewal process, thereafter, leading up to the renewal of a new ten-year term beginning July 1, 2026. If renewed, the TBID would generate approximately $2,275,000[2] on an annual basis for promotion of travel and tourism, specific to Burbank (amount based on 1.75% of rental room revenue generated during Fiscal Year 2026-27). This is approximately $875,000 more than is currently collected and will allow for increased marketing and destination development projects that enhance the visitor experience.

Council adopted the Resolution of Intention to Renew the TBID on September 9th. On September 12th, a written notice was sent to all hotel owners notifying them of the approval of the Resolution of Intention and providing them with the opportunity to protest the renewal of the TBID (Attachment 3).

Next Steps in the Renewal Process

- A Public Hearing is scheduled for October 14, 2025 for the Council to accept public comment regarding the proposed renewal of the TBID. There is no action required by Council at the October 14, 2025 meeting other than to accept any public comment submitted.
- At the October 14th meeting, if written opposition is received from hotels which represent more than 50% or more of the proposed assessments, and the written opposition is not withdrawn, the renewal process will end and no further action to renew the TBID can be taken for a period of one (1) year from the date of the final public hearing (November 18, 2025).
- A second Public Hearing is scheduled for November 18, 2025.
- If no opposition is received, or opposition representing less than 50% of the proposed assessment is received up until the close of the final hearing on November 18, 2025, Council may consider the renewal of the TBID on November 18, 2025.

ENVIRONMENTAL REVIEW

This report has no potential for resulting in a direct or reasonably foreseeable indirect physical change to the environment and falls outside the definition of a "project" under the California Environmental Quality Act (CEQA) and is therefore not subject to CEQA review

[1] Hotels are also commonly referred to as lodging businesses.
[2] Current assessment is 1% and generates approximately $1,400,000 annually.

pursuant to § 15378 of Title 14 of the California Code of Regulations (CEQA Guidelines).

FISCAL IMPACT

There is no fiscal impact associated with this report.

CONCLUSION

The TBID has a successful track record of enhancing Burbank's presence as a business and leisure tourist destination. Since 2011, the TBID has maintained the same 1% assessment rate, utilizing approximately $1.4 million annually to promote Burbank as a top tourist destination through marketing and destination development. With the renewal of a new 10-year term, the assessment rate increase will support marketing and destination development initiatives like monument signage and wayfinding to enhance the visitor experience in Burbank. By moving forward with the renewal of the TBID, Council is reinforcing its commitment to enhance and grow the tourism sector in Burbank.

ATTACHMENTS

Attachment 1 – Staff Report for Resolution of Intention from September 9, 2025
Attachment 2 – Signed Petitions
Attachment 3 – Notice of Public Meeting and Public Hearing

STAFF REPORT

COMMUNITY DEVELOPMENT

DATE: September 9, 2025

TO: Justin Hess, City Manager

FROM: Patrick Prescott, Community Development Director
VIA: Simone McFarland, Assistant Community Development Director
BY: Mary Hamzoian, Economic Development Manager

SUBJECT: Adoption of a Resolution of Intention to Renew the Burbank Tourism Business Improvement District and Set a Public Meeting and Hearing

RECOMMENDATION

Adopt A RESOLUTION OF THE COUNCIL OF THE CITY OF BURBANK DECLARING ITS INTENTION TO RENEW THE BURBANK TOURISM BUSINESS IMPROVEMENT DISTRICT (TBID) AND FIXING THE TIME AND PLACE OF A PUBLIC MEETING AND A PUBLIC HEARING FOR THE TBID RENEWAL AND THE LEVY OF ASSESSMENTS ON LODGING BUSINESSES.

BACKGROUND

In 2011, City Council (Council) established Burbank's TBID to market and promote Burbank and its hotels as a desirable national and international destination. The TBID has successfully operated for more than 14 years and is currently requesting to renew the district for a new 10-year term. TBIDs are a self-imposed, special benefit assessment district, made up of lodging establishments. This approach has been successful in California and Burbank. Hoteliers support TBIDs because of the economic value that it provides to their businesses.

Burbank's TBID is comprised of hotels that have more than 25 rooms. The goal of the TBID is to attract overnight visitors and increase hotel room occupancy rates, average daily rates, and local sales tax revenues. The funding to promote the hotels is collected through a one percent (1%) assessment that is charged to the overnight visitor. In Burbank, the 1% assessment rate generates approximately $1.4 million annually. The assessment rate has not been increased since 2011.

Burbank's TBID is governed by a Board of Directors known as the Burbank Hospitality Association (BHA), a non-profit corporation. The BHA, also known as Visit Burbank, is an example of a successful public/private partnership with the City. The Economic Development Team, supported through funding received from the TBID, manages the programs and projects of the TBID by developing strategies and initiatives to enhance tourism attraction and visitor spending in Burbank.

During each renewed term of the TBID, the City and the BHA enter into an Agreement for Services to Administer the TBID. The Agreement outlines the responsibilities of both parties including staffing services. The current Agreement is effective through June 30, 2026. An amended Agreement will be brought back to Council for consideration pending the renewal of the TBID.

With the ongoing success of the TBID for more than 14 years, the hotel owners are in support of renewing the TBID for another 10- year term.

The TBID is currently in its second 10-year term renewal[1] and, is requesting to increase the assessment rate from 1% to 1.75%. The new proposed assessment of 1.75% will generate approximately $2,275,000 annually. Unlike the City's Transient Occupancy Tax (TOT) which goes directly to the General Fund, the assessment revenue collected through the TBID remains with the TBID. This provides a stable funding mechanism that supports the growth of this industry, including attracting more overnight visitors, conferences, and events to Burbank, resulting in increased hotel room occupancy, sales tax, Transient Parking Tax (TPT), and TOT revenue to the City's General Fund.

<u>TBID's Accomplishments</u>

The TBID has several notable accomplishments since its inception in 2011. A few select accomplishments include:

1. Establishing a brand identity and marketing strategy for Burbank as a destination, launching visitburbank.com, digital advertising, hotel booking engine, and social media campaigns with an audience reach of over 50 million annually;
2. Investing more than $600,000 annually on digital and social media marketing to promote Burbank to a drive-time market of 300 miles and airport feeder markets;
3. Creating the Universal Studios Hotel Program, where 12 Burbank hotels are included on the Universal Studios Hotel website, generating approximately $1.4 million in hotel room revenue annually;
4. Developing the Superhero Statue Program in partnership with DC Comics, boosting Burbank's brand as Media Capital of the World. To date, the TBID has unveiled three Superhero statues: Batman, Wonder Woman, and Green Lantern, and one more statue is in the works for the current fiscal year;

[1] The TBID was established by Council in 2011 and then renewed in 2016 for a ten-year term that expires June 20, 2026.

5. Attraction and retention of major conferences including MUSEXPO Creative Summit, CTN Animation Expo, Afro Animation Summit, California Society of Association Executives, Arts, Media, Entertainment Institute, generating more than $300,000 in hotel room revenue annually;
6. Launch of Visit Burbank's Bicycle Program, providing 50 Visit Burbank branded bicycles to eight participating hotels as an added amenity for their hotel guests;
7. Launch of the online Visit Burbank's Gift Shop; and
8. Attraction of the globally recognized traveling art exhibit, Elephant Parade Burbank 2024.

DISCUSSION

2026-2036 TBID Renewal

As of the writing of this report, staff has received signed petitions (Attachment 2) from 14 hotels, representing 91.33% of the total district assessments in favor of renewal. Lodging business owners decided to pursue renewal of the TBID to continue a revenue source devoted to marketing Burbank as a tourist, meetings, and events destination. This overwhelming support provides Council the opportunity to initiate the district renewal process, thereafter, leading up to the renewal of a new ten-year term on July 1, 2026. As stated above, if renewed, the TBID would generate approximately $2,275,000 on an annual basis for promotion of travel and tourism specific to Burbank (amount based on 1.75% of TOT generated during Fiscal Year 2026-27). This is approximately $875,000 more than is currently collected and will allow for increased marketing and destination development projects that enhance the visitor experience.

Management District Plan

The Management District Plan (MDP) (Attachment 3) is the governing document which provides the framework for the TBID's operations and ensures that the funds are used exclusively based on the services noted in the MDP. Key components of the MDP are the following:

- Boundaries – All lodging businesses existing or new with 25 or more rooms located within the boundaries of the City of Burbank;
- Budget – Approximately $2,275,000 annually;
- Assessment – The initial annual assessment rate is 1.75% of gross short-term room rental revenue; and
- Term – 10-year life beginning July 1, 2026 through June 30, 2036.

Services

The TBID focuses on two major areas to increase overnight stays in Burbank: Sales and Marketing and Destination Development. Sales and Marketing will continue to promote Burbank as a tourist, meetings, and events destination through a domestic, national and international marketing campaign. Destination Development will continue to enhance the

visitor experience through art exhibits, superhero statues, monument signage, and gateway enhancements.

Annual Budget

The MDP proposes a budget of approximately $2,275,000 annually. The following is a breakdown of services provided, and the percentage of funds allocated for each service.

SERVICES PROVIDED	PERCENTAGE	TOTAL
Sales and Marketing	55%	$1,251,250
Administration and Operations	20%	$455,000
Destination Development	20%	$455,000
Contingency/Reserve	5%	$113,750
TOTAL TBID ANNUAL BUDGET	**100%**	**$2,275,000**

Assessment Rate

The TBID's current assessment rate is 1% and generates approximately $1.4 million annually. With the proposed renewal, the annual assessment rate will increase to 1.75%[2] generating approximately $2,275,000 million. During the new 10-year term, the BHA will also have ability to vote to increase the assessment rate annually to a maximum rate of three percent (3%), or decrease the assessment rate, up to a minimum of one half of one percent (0.5%). This type of flexibility is typical in MDP's and has been a prevalent part of the TBID's existing MDP since 2011.

Term

The renewed TBID will have a 10-year term, beginning July 1, 2026, and ending June 30, 2036. The 1.75% assessment will be implemented beginning July 1, 2026.

Collection of Funds

The City will continue to be responsible for collecting the assessment on a monthly basis (including any delinquencies, interest, and overdue charges) from each assessed business. The City shall forward the assessments to the BHA, which will have the responsibility of managing the funds and ensuring the services stated in the MDP are accomplished.

Next Steps in the TBID Renewal Process

The adoption of the Resolution of Intention to Renew the TBID is the first step in the renewal process for the TBID. Should the Council elect to adopt the Resolution of Intention to Renew, the next steps will follow:

[2] Assessments will not be collected on stays of more than 30 consecutive days, stays by any Federal or State officer or employee while on official business; and stays by any officer or employee of a foreign government who is exempt by reason of express provision of Federal law or international treaty.

- A written notice will be sent to all hotel owners notifying them of the approval of the Resolution of Intention and providing them with the opportunity to protest the TBID's renewal (Attachment 4).
- A public hearing will be set for October 14, 2025 to provide public comment regarding the TBID's renewal.
- A final public hearing will be set to receive public comment and consider the formation of the TBID on November 18, 2025.

ENVIRONMENTAL REVIEW

This report has no potential for resulting in a direct or reasonably foreseeable indirect physical change to the environment and falls outside the definition of a "project" under the California Environmental Quality Act (CEQA) and is therefore not subject to CEQA review pursuant to § 15378 of Title 14 of the California Code of Regulations (CEQA Guidelines).

FISCAL IMPACT

There is no direct fiscal impact to the City's General Fund by adopting the Resolution of Intention to renew the TBID. The TBID contributes approximately $234,600 annually towards Economic Development staff salaries. With the renewal, the proposed amount will be approximately $386,750 annually. The TBID has worked as a mechanism to increase TOT, Transient Parking Tax, and sales tax revenue for the City since 2011, which continues to help support businesses, programs, and services in the City.

CONCLUSION

The TBID has a successful track record of enhancing Burbank's presence as a business and leisure tourist destination. Since 2011, the TBID has maintained the same 1% assessment rate, utilizing approximately $1.4 million annually to promote Burbank as a top tourist destination through marketing and destination development. With the renewal of a new 10-year term, the assessment rate increase will support marketing and destination development initiatives like monument signage and wayfinding to enhance the visitor experience in Burbank. By approving the Resolution of Intention to Renew the TBID, Council is reinforcing its commitment to enhance and grow the tourism sector in Burbank. The City, hotels, the Hollywood Burbank Airport, Warner Bros. Studio Tour Hollywood, and Universal Studios Hollywood will continue to work together to grow Burbank's tourism identity into the future. By promoting the City's hotels and amenities, such as Hollywood Burbank Airport and the DeBell Golf Course and popular tourist attractions such as the Warner Bros. Studio Tour Hollywood, the TBID is strengthening Burbank's tourism sector, which contributes significantly to the overall economic vitality of the City.

ATTACHMENTS

Attachment 1 – Resolution of Intention
Attachment 2 – Signed Petitions
Attachment 3 – Management District Plan 2026-2036
Attachment 4 – Notice of Public Meeting and Public Hearing

PETITION TO THE CITY OF BURBANK
TO RENEW THE BURBANK TOURISM BUSINESS IMPROVEMENT DISTRICT

We petition you to initiate proceedings to renew the Burbank Tourism Business Improvement District (BTBID) in accordance with the Property and Business Improvement District Law of 1994, Streets and Highways Code section 36600 et seq., for the purpose of providing services as described in the summary of the Management District Plan attached hereto as Exhibit A.

Business Establishment & Address	Business Owner
Marriott Burbank Airport Hotel 2500 N Hollywood Way, Burbank, CA 91505	AWH Burbank Hotel LLC

The undersigned is the business owner or the authorized representative of the business owner and is the person legally authorized and entitled to sign this petition.

David Altshuler	Authorized Signatory
Owner /Owner Representative Name (printed)	Title
	9.2.25
Owner/Owner Representative Signature	Date

A complete copy of the Management District Plan will be furnished upon request. Requests for a complete copy of the Management District Plan should be made to:

Odette Zakarian
Burbank Hospitality Association
PO BOX 349
Burbank, CA 91503
818-238-5179

PETITION TO THE CITY OF BURBANK
TO RENEW THE BURBANK TOURISM BUSINESS IMPROVEMENT DISTRICT

We petition you to initiate proceedings to renew the Burbank Tourism Business Improvement District (BTBID) in accordance with the Property and Business Improvement District Law of 1994, Streets and Highways Code section 36600 et seq., for the purpose of providing services as described in the summary of the Management District Plan attached hereto as Exhibit A.

Business Establishment & Address	Business Owner
Hilton Garden Inn	OTO Development
401 S. San Fernando Blvd.	
Burbank, CA 91502	

The undersigned is the business owner or the authorized representative of the business owner and is the person legally authorized and entitled to sign this petition.

Michael Hernandez
Owner /Owner Representative Name (printed)

General Manager
Title

Owner/Owner Representative Signature

8/25/25
Date

A complete copy of the Management District Plan will be furnished upon request. Requests for a complete copy of the Management District Plan should be made to:

Odette Zakarian
Burbank Hospitality Association
PO BOX 349
Burbank, CA 91503
818-238-5179

PETITION TO THE CITY OF BURBANK
TO RENEW THE BURBANK TOURISM BUSINESS IMPROVEMENT DISTRICT

We petition you to initiate proceedings to renew the Burbank Tourism Business Improvement District (BTBID) in accordance with the Property and Business Improvement District Law of 1994, Streets and Highways Code section 36600 et seq., for the purpose of providing services as described in the summary of the Management District Plan attached hereto as Exhibit A.

Business Establishment & Address	Business Owner
1112 N. Hollywood Way Burbank, CA 91505	Vaghashia Family LP
2255 N. Buena Vista St Burbank, CA 91504	Vaghashia Family LP

The undersigned is the business owner or the authorized representative of the business owner and is the person legally authorized and entitled to sign this petition.

Sundeep G. Vaghashia — Owner's Rep

Owner /Owner Representative Name (printed) — Title

September 1, 2025

Owner/Owner Representative Signature — Date

A complete copy of the Management District Plan will be furnished upon request. Requests for a complete copy of the Management District Plan should be made to:

Odette Zakarian
Burbank Hospitality Association
PO BOX 349
Burbank, CA 91503
818-238-5179

PETITION TO THE CITY OF BURBANK
TO RENEW THE BURBANK TOURISM BUSINESS IMPROVEMENT DISTRICT

We petition you to initiate proceedings to renew the Burbank Tourism Business Improvement District (BTBID) in accordance with the Property and Business Improvement District Law of 1994, Streets and Highways Code section 36600 et seq., for the purpose of providing services as described in the summary of the Management District Plan attached hereto as Exhibit A.

Business Establishment & Address	Business Owner
Cambria Hotel Burbank Airport	Choice Hotels
3501 N. San Fernando Blvd	
Burbank, CA 91505	

The undersigned is the business owner or the authorized representative of the business owner and is the person legally authorized and entitled to sign this petition.

Kristin Perry — Director of Sales

Owner /Owner Representative Name (printed) — Title

Kristin Perry — 8.29.25

Owner/Owner Representative Signature — Date

A complete copy of the Management District Plan will be furnished upon request. Requests for a complete copy of the Management District Plan should be made to:

Odette Zakarian
Burbank Hospitality Association
PO BOX 349
Burbank, CA 91503
818-238-5179

ATTACHMENT 2 - 5

PETITION TO THE CITY OF BURBANK
TO RENEW THE BURBANK TOURISM BUSINESS IMPROVEMENT DISTRICT

We petition you to initiate proceedings to renew the Burbank Tourism Business Improvement District (BTBID) in accordance with the Property and Business Improvement District Law of 1994, Streets and Highways Code section 36600 et seq., for the purpose of providing services as described in the summary of the Management District Plan attached hereto as Exhibit A.

Business Establishment & Address	Business Owner
924 W. Olive Ave	Ashok Patel
Burbank CA. 91506	
Portofino Inn	

The undersigned is the business owner or the authorized representative of the business owner and is the person legally authorized and entitled to sign this petition.

Owner /Owner Representative Name (printed) — Title: Onsite Manager

ALFREDO Limones

Owner/Owner Representative Signature — Date

A complete copy of the Management District Plan will be furnished upon request. Requests for a complete copy of the Management District Plan should be made to:

Odette Zakarian
Burbank Hospitality Association
PO BOX 349
Burbank, CA 91503
818-238-5179

PETITION TO THE CITY OF BURBANK
TO RENEW THE BURBANK TOURISM BUSINESS IMPROVEMENT DISTRICT

We petition you to initiate proceedings to renew the Burbank Tourism Business Improvement District (BTBID) in accordance with the Property and Business Improvement District Law of 1994, Streets and Highways Code section 36600 et seq., for the purpose of providing services as described in the summary of the Management District Plan attached hereto as Exhibit A.

Business Establishment & Address	Business Owner
3901 W. RIVERSIDE DR. BURBANK, CA 91505	TANGERINE PROPERTY HOLDINGS INC.

The undersigned is the business owner or the authorized representative of the business owner and is the person legally authorized and entitled to sign this petition.

KAMAL DHANJI — MANAGER

~~Owner~~ /Owner Representative Name (printed) — Title

8/29/25

~~Owner~~/Owner Representative Signature — Date

A complete copy of the Management District Plan will be furnished upon request. Requests for a complete copy of the Management District Plan should be made to:

Odette Zakarian
Burbank Hospitality Association
PO BOX 349
Burbank, CA 91503
818-238-5179

PETITION TO THE CITY OF BURBANK
TO RENEW THE BURBANK TOURISM BUSINESS IMPROVEMENT DISTRICT

We petition you to initiate proceedings to renew the Burbank Tourism Business Improvement District (BTBID) in accordance with the Property and Business Improvement District Law of 1994, Streets and Highways Code section 36600 et seq., for the purpose of providing services as described in the summary of the Management District Plan attached hereto as Exhibit A.

Business Establishment & Address	Business Owner
Courtyard by Marriott 2100 Empire Ave Burbank, CA 91504	Apple REIT

The undersigned is the business owner or the authorized representative of the business owner and is the person legally authorized and entitled to sign this petition.

Lara Gadsby — Director of Sales
Owner /Owner Representative Name (printed) — Title

Lara Gadsby — 8/22/25
Owner/Owner Representative Signature — Date

A complete copy of the Management District Plan will be furnished upon request. Requests for a complete copy of the Management District Plan should be made to:

Odette Zakarian
Burbank Hospitality Association
PO BOX 349
Burbank, CA 91503
818-238-5179

PETITION TO THE CITY OF BURBANK
TO RENEW THE BURBANK TOURISM BUSINESS IMPROVEMENT DISTRICT

We petition you to initiate proceedings to renew the Burbank Tourism Business Improvement District (BTBID) in accordance with the Property and Business Improvement District Law of 1994, Streets and Highways Code section 36600 et seq., for the purpose of providing services as described in the summary of the Management District Plan attached hereto as Exhibit A.

Business Establishment & Address	Business Owner
Residence Inn Burbank 1321 Thea Way Burbank Ca 91502	Apple REIT 1321 Thea Way Burbank Ca 91502

The undersigned is the business owner or the authorized representative of the business owner and is the person legally authorized and entitled to sign this petition.

Shannon Labbe — General Manager

Owner /Owner Representative Name (printed) — Title

Owner/Owner Representative Signature — 8.26.25 Date

A complete copy of the Management District Plan will be furnished upon request. Requests for a complete copy of the Management District Plan should be made to:

Odette Zakarian
Burbank Hospitality Association
PO BOX 349
Burbank, CA 91503
818-238-5179

PETITION TO THE CITY OF BURBANK
TO RENEW THE BURBANK TOURISM BUSINESS IMPROVEMENT DISTRICT

We petition you to initiate proceedings to renew the Burbank Tourism Business Improvement District (BTBID) in accordance with the Property and Business Improvement District Law of 1994, Streets and Highways Code section 36600 et seq., for the purpose of providing services as described in the summary of the Management District Plan attached hereto as Exhibit A.

Business Establishment & Address	**Business Owner**
Springhill Suites LA Downtown Burbank	Apple Reit Hospitality
549 S. San Fernanda Blvd	549 S. San Fernanda Blvd
Burbank, CA 91502	Burbank, CA 91502

The undersigned is the business owner or the authorized representative of the business owner and is the person legally authorized and entitled to sign this petition.

Fatima Achhal — General Manager

Owner /Owner Representative Name (printed) — Title

Owner/Owner Representative Signature — 8/26/25 Date

A complete copy of the Management District Plan will be furnished upon request. Requests for a complete copy of the Management District Plan should be made to:

Odette Zakarian
Burbank Hospitality Association
PO BOX 349
Burbank, CA 91503
818-238-5179

PETITION TO THE CITY OF BURBANK
TO RENEW THE BURBANK TOURISM BUSINESS IMPROVEMENT DISTRICT

We petition you to initiate proceedings to renew the Burbank Tourism Business Improvement District (BTBID) in accordance with the Property and Business Improvement District Law of 1994, Streets and Highways Code section 36600 et seq., for the purpose of providing services as described in the summary of the Management District Plan attached hereto as Exhibit A.

Business Establishment & Address	**Business Owner**
Hotel Burbank	Oh So Original, Inc.
150 E. Angeleno Ave, Burbank, CA 91502	

The undersigned is the business owner or the authorized representative of the business owner and is the person legally authorized and entitled to sign this petition.

Vladimir Rodriguez	Director of Operations
Owner /Owner Representative Name (printed)	Title
Vladimir Rodriguez	8/23/25
Owner/Owner Representative Signature	Date

A complete copy of the Management District Plan will be furnished upon request. Requests for a complete copy of the Management District Plan should be made to:

Odette Zakarian
Burbank Hospitality Association
PO BOX 349
Burbank, CA 91503
818-238-5179

PETITION TO THE CITY OF BURBANK
TO RENEW THE BURBANK TOURISM BUSINESS IMPROVEMENT DISTRICT

We petition you to initiate proceedings to renew the Burbank Tourism Business Improvement District (BTBID) in accordance with the Property and Business Improvement District Law of 1994, Streets and Highways Code section 36600 et seq., for the purpose of providing services as described in the summary of the Management District Plan attached hereto as Exhibit A.

Business Establishment & Address	**Business Owner**
Hotel Amarano Burbank	NRE Burbank Hotel Owner

The undersigned is the business owner or the authorized representative of the business owner and is the person legally authorized and entitled to sign this petition.

David Lurie	General Manager
Owner /Owner Representative Name (printed)	Title
David Lurie	8/23/25
Owner/Owner Representative Signature	Date

A complete copy of the Management District Plan will be furnished upon request. Requests for a complete copy of the Management District Plan should be made to:

Odette Zakarian
Burbank Hospitality Association
PO BOX 349
Burbank, CA 91503
818-238-5179

PETITION TO THE CITY OF BURBANK
TO RENEW THE BURBANK TOURISM BUSINESS IMPROVEMENT DISTRICT

We petition you to initiate proceedings to renew the Burbank Tourism Business Improvement District (BTBID) in accordance with the Property and Business Improvement District Law of 1994, Streets and Highways Code section 36600 et seq., for the purpose of providing services as described in the summary of the Management District Plan attached hereto as Exhibit A.

Business Establishment & Address	Business Owner
Coast Burbank Hotel 2011 W Olive Ave Burbank, CA 91506	Coast Hotel Burbank LLC
Safari Inn 1911 West Olive Avenue Burbank, CA 91506	Safari Inn LLC

The undersigned is the business owner or the authorized representative of the business owner and is the person legally authorized and entitled to sign this petition.

Tony Garibian — General Manager

Owner /Owner Representative Name (printed) — Title

08/22/2025

Owner/Owner Representative Signature — Date

A complete copy of the Management District Plan will be furnished upon request. Requests for a complete copy of the Management District Plan should be made to:

Odette Zakarian
Burbank Hospitality Association
PO BOX 349
Burbank, CA 91503
818-238-5179

NOTICE OF PUBLIC MEETING AND PUBLIC HEARING CONCERNING THE RENEWAL OF THE BURBANK TOURISM BUSINESS IMPROVEMENT DISTRICT (BTBID) AND LEVY OF AN ASSESSMENT ON LODGING BUSINESSES WITHIN THE BTBID

NOTICE IS HEREBY GIVEN that on September 9, 2025, the City Council (Council) of the City of Burbank (City) adopted a Resolution of Intention to renew the BTBID and to levy an assessment on lodging businesses within the BTBID as set forth in the Resolution of Intention.

NOTICE IS HEREBY FURTHER GIVEN that at 6:00 PM on October 14, 2025, at the Council Chambers located at 275 East Olive Avenue, Second Floor, Burbank, CA 91502, a public meeting shall be held pursuant to Government Code section 54954.6 to allow public testimony regarding the renewal of the BTBID and the levy of assessments therein as set forth in the Resolution of Intention and pursuant to Government Code section 54954.6.

NOTICE IS HEREBY FURTHER GIVEN that at 6:00 PM on November 18, 2025, at Council Chambers located at 275 East Olive Avenue, Second Floor, Burbank, CA 91502, has been set as the time and place for a public hearing at which time the Council proposes to renew the BTBID and to levy the proposed assessment as set forth in the Resolution of Intention.

Location: The renewed BTBID includes all lodging businesses with 25 rooms or more, existing and in the future, available for public occupancy located within the boundaries of the City.

Services: The BTBID is designed to provide specific benefits directly to payors by increasing awareness and demand for room night sales. Sales & Marketing, Destination Development, and other improvements and activities will increase demand for overnight tourism and market payors as tourist, meeting and event destinations, thereby increasing demand for room night sales.

Budget: The total BTBID annual assessment budget for the initial year of its ten (10) year operation is anticipated to be approximately $2,275,000. A similar assessment budget is expected to apply to subsequent years, but this assessment budget is expected to fluctuate as room sales do, as businesses open and close, and if the assessment rate is increased.

Cost: The current annual assessment rate is one percent (1%) of gross short-term room rental revenue. During the current ten (10) year term, the assessment rate may be increased by the Burbank Hospitality Association's (BHA's) Board to a maximum of three percent (3%) of gross short-term room rental revenue.

The renewed annual assessment rate is one and three quarters percent (1.75%) of gross short-term sleeping room rental revenue. During the BTBID term, the assessment rate may be increased by the BHA to a maximum rate of three percent (3%) of gross short-term sleeping room rental revenue for assessed lodging businesses. If the assessment rate is increased, it may subsequently be decreased but shall not be decreased below a minimum of one half of one percent (0.5%) of gross short-term room rental revenue. Based on the benefit received, assessments will not be collected on: stays of more than thirty (30) consecutive days; stays by any person as to whom, or any occupancy as to

which, it is beyond the power of the City; stays by any Federal or State officer or employee while on official business only and when payment for such occupancy is made directly to the operator by duly authorized voucher payment from a governmental accounting office; and stays by any officer or employee of a foreign government who is exempt by reason of express provision of Federal law or international treaty.

Collection: The City will be responsible for collecting the assessment on a monthly basis (including any delinquencies, interest, and overdue charges) from each assessed lodging business located in the boundaries of the BTBID. The City shall take all reasonable efforts to collect the assessments from each assessed lodging business.

Duration: The renewed BTBID will have a ten (10) year life, beginning July 1, 2026, or as soon as possible thereafter, and ending ten (10) years from its start date. After ten (10) years, the BTBID may be renewed pursuant to the Property and Business Improvement District Law of 1994, Streets and Highways Code section 36600 et seq. if assessed lodging business owners support continuing the BTBID programs.

Management: The BHA shall continue to serve as the BTBID's Owners' Association. The Owners' Association is charged with managing funds and implementing programs and must provide annual reports to the City Council.

Protest: Any owner of a lodging business with 25 rooms or more, within the renewed BTBID that will be subject to the assessment may protest the renewal of the BTBID. If written protests are received from the owners of lodging businesses in the renewed BTBID who represent fifty percent (50%) or more of the estimated annual assessments to be levied, the BTBID shall not be renewed, and the assessment shall not be imposed.

You may mail a written protest to:

Office of the City Clerk
City of Burbank
275 East Olive Avenue, 1st Floor
Burbank, CA 91502

You may also appear at the public meeting or hearing and submit a written protest at that time.

Information: Should you desire additional information about this proposed BTBID renewal or assessment contact:

Odette Zakarian
Burbank Hospitality Association
PO BOX 349
Burbank, CA 91503
818-238-5179

Correspondences

Please Note: If Additional Documents/Correspondences are submitted for this item, they will be periodically posted to the City website for public viewing.

STAFF REPORT

CITY CLERK'S OFFICE

DATE: October 14, 2025

TO: Honorable Mayor and Members of the City Council

FROM: Kimberley Clark, City Clerk
BY: Maria Sanchez, Administrative Analyst I

SUBJECT: Appointment to Fill One Vacancy on the Burbank Housing Corporation Board of Directors for a Full Two-Year Term

RECOMMENDATION

Appoint one member to the Burbank Housing Corporation Board of Directors to fill a full two-year term ending October 31, 2027.

BACKGROUND

All Board, Commission, and Committee (BCC) Members shall be appointed by a three-fifths (3/5) vote of all Council Members and serve without compensation from the City. No person shall serve on more than one BCC at the same time. Vacancies on a BCC occurring during the term of office shall be filled within 90 days from the date the vacancy occurs. Any person appointed to fill a vacancy shall hold office for the remainder of the unexpired term and must complete the term before applying to serve on another board, commission, or committee. In addition, all applicants must reside within the jurisdictional boundaries of the City of Burbank (per Burbank Municipal Code (BMC) §§ 2-1-404, 2-1-405, 2-1-406, and 2-1-407).

Once a vacancy is established, the City Clerk advertises the vacancy for 30 days, accepts applications, and provides the applications received to Council for consideration. Applicants have the option of applying for up to two BCCs, indicating their first and second choice.

The voting process established allows for each Council Member to vote as many times as there are vacancies on the BCC being considered; the applicants receiving a majority

of the votes in the first round are either appointed or move into the second round, if necessary. The process continues for as many rounds as are necessary to attain the correct number of applicants to fill the vacancy(ies).

Burbank Housing Corporation Board of Directors

The Burbank Housing Corporation (BHC) was established in 1997 to improve and preserve the affordable housing inventory in the City of Burbank and to provide community assistance and services within the Focus Neighborhoods in the City. BHC is a non-profit organization with a Board of Directors (Board) comprised of nine members. In accordance with its By-laws and Articles of Incorporation, the directors are appointed by different segments representative of the Burbank community: the Chamber of Commerce, Wesley Senior Housing, the City of Burbank, and BHC residents. Three board members are at-large members nominated and appointed by the BHC Board. The City nominates two board members. Members of the Board receive no compensation.

DISCUSSION

On September 2, 2025, the City Clerk's Office began advertising and accepting applications for the vacancy on the BHC Board of Directors for a two-year term. This vacancy is a scheduled vacancy for Board Member Ruth Martinez-Baenen, who serves as one of the two representatives from the City of Burbank and whose term is set to expire on October 31, 2025.

To obtain qualified candidates, a Notice of Vacancy was advertised through the following:

- City website
- City Council meeting announcements
- All social media platforms managed by the City Clerk's Office
- Press releases sent to the *Burbank Leader* and *MyBurbank.com*
- Notices posted on the City Hall Bulletin Board
- Community groups and organizations
- Constant Contact email notification

The deadline to submit applications to the City Clerk's Office was Wednesday, October 1, 2025, at 5:00 p.m. The City Clerk's Office received a total of five applications for the Board: Joseph Arnone, Katherine Laster, Leona Rollins, Danny Alas, and Samuel Kuiumdjian. The applications are listed in the order received.

ENVIRONMENTAL REVIEW

This activity has no potential for resulting in either a direct physical change in the environment, or a reasonably foreseeable indirect physical change in the environment and, as such, is not a "project" subject to the requirements of the California Environmental Quality Act (CEQA) 14 Cal. Code Regs § 15378.

FISCAL IMPACT

There is no fiscal impact associated with this item.

CONCLUSION

The City and the community both realize substantial benefits from civic involvement. Appointments to the boards, commissions, and committees help encourage public participation in the governmental process and ensure Burbank residents have a voice.

ATTACHMENTS

Attachment 1 – Applications and Resumes
Attachment 2 – Redevelopment Agency Resolution R-1878
Attachment 3 – Housing Authority Resolution H-209

Applications and Resumes

Application Form

Profile

Joseph
First Name

Middle Initial

Arnone
Last Name

[redacted]
Email Address

[redacted] St
Home Address

Suite or Apt

Burbank
City

CA
State

91506
Postal Code

[redacted]
Primary Phone

[redacted]
Alternate Phone

Arnone's Income Tax Service
Employer

Owner
Job Title

Tax Preparer / Landlord / Inactive Contractor
Occupation

Which Boards would you like to apply for?

Burbank Housing Corporation Board of Directors: Submitted

Length of time as a Burbank Resident:

62 Years

Burbank Registered Voter?

(•) Yes ( ) No

Interests & Experiences

Please tell us about yourself and why you want to serve.

Why are you interested in serving on a board, commission or committee?

As a property owner, business owner and resident of Burbank, along with construction experience, I feel that I have a skill set that would be useful on this board.

Education

Graduate of Burbank High School 1981. California Contractor's School 1987. Tax preparer's school 2004.

Additional Pertinent Courses or Training

Other Pertinent Skills, Experience or Interests

Upload a Resume

Community Involvement

Specify current or prior service on a City Board, Commission or Committee:

I have no prior board experience.

List Community activities in which you are involved:

Community Emergency Response Team Instructor. Burbank Fire Corps Member including, past steering committee member, past operations coordinator, past duty officer. Current Net Controler for Burbank's Disaster Network radio system (D-Net).

If you are related to any City of Burbank employee(s), please state their name(s), relationship(s), and department(s). If you are not related to a City of Burbank employee, please put N/A.

N/A

Conflict of Interest

Conflict of Interest:

Rules of law and ethics prohibit members from participating in and voting on matters in which they may have a direct or indirect conflict of interest including a financial interest. Are you aware of any potential conflicts of interest which may develop from your occupation or financial holdings in relation to your responsibilities as a member of the Board, Commission or Committee to which you seek appointment?

○ Yes ◉ No

If you answer yes, explain in detail any potential conflicts in the same manner as required by the Fair Political Practices Commission's Statement of Economic Interests (Form 700). (If you should have any questions about this matter or need further information as it relates to your situation, please advise the City Clerk prior to submitting your application.)

AB 1234 Training

The Board, Commission or Committee (collectively Board) you are seeking appointment to provides City reimbursement for attending trainings or conferences. Therefore, under State Law all members of the Board must receive at least two hours of ethic's training, as prescribed by the Fair Political Practices Commission, within one year of appointment and once every two years thereafter.

First Choice

FIRST choice for Board/Commission/Committee appointment:

Burbank Housing Corp. Board of Directors

Describe any qualifications, experience, and education, as well as any technical or professional background you may have relative to the duties of this position.

Life long Burbank Resident, Residential landlord and Retired C-36 Contractor

What are your goals in serving on this Board/Commission/Committee?

To be of service to the city.

Second Choice

SECOND choice for Board/Commission/Committee appointment:

Describe any qualifications, experience, and education, as well as any technical or professional background you may have relative to the duties of this position

What are your goals in serving on this Board/Commission/Committee?

Supplemental Questions

Acknowledgement

Acknowledgment No. 1 - General

ALL INFORMATION SUBMITTED IS A PUBLIC RECORD AND WILL BE POSTED ON THE CITY'S WEBSITE. All City Board, Commission, and Committee members serve without compensation from the City. No person shall serve at the same time on more than one Board, Commission or Committee. All applicants must be electors of, and actually reside in the City of Burbank, with the exception of the Burbank Cultural Arts Commission and the Sustainable Burbank Commission. (Per BMC Section 2-1-405, 2-1-406, 2-1-407)

☑ I Agree

Application Form

Profile

Katherine
First Name

M.
Middle Initial

Laster
Last Name

[redacted]
Email Address

[redacted] Rd. [redacted]
Home Address

Suite or Apt

Burbank
City

CA
State

91501
Postal Code

[redacted]
Primary Phone

[redacted]
Alternate Phone

Self
Employer

Owner, operator
Job Title

Chiropractor, Retired
Occupation

Which Boards would you like to apply for?

Burbank Housing Corporation Board of Directors: Submitted

Length of time as a Burbank Resident:

50 years

Burbank Registered Voter?

(•) Yes ( ) No

Interests & Experiences

Please tell us about yourself and why you want to serve.

Why are you interested in serving on a board, commission or committee?

I now have the time, & it has always been an interest of mine & never explored.

Education

Graduated, Dover High School, Dover, Delaware Cleveland Chiropractic College Graduated Class of 1969 Attended all classes for continual education until retirement 2023.

Additional Pertinent Courses or Training

Speech classes, local schools Painting, art classes

Other Pertinent Skills, Experience or Interests

Avid listener to local musicians loaded w/talent

Upload a Resume

Community Involvement

Specify current or prior service on a City Board, Commission or Committee:

None.

List Community activities in which you are involved:

Jocelyn Center Volunteer

If you are related to any City of Burbank employee(s), please state their name(s), relationship(s), and department(s). If you are not related to a City of Burbank employee, please put N/A.

N/A

Conflict of Interest

Conflict of Interest:

Rules of law and ethics prohibit members from participating in and voting on matters in which they may have a direct or indirect conflict of interest including a financial interest. Are you aware of any potential conflicts of interest which may develop from your occupation or financial holdings in relation to your responsibilities as a member of the Board, Commission or Committee to which you seek appointment?

○ Yes ◉ No

If you answer yes, explain in detail any potential conflicts in the same manner as required by the Fair Political Practices Commission's Statement of Economic Interests (Form 700). (If you should have any questions about this matter or need further information as it relates to your situation, please advise the City Clerk prior to submitting your application.)

AB 1234 Training

The Board, Commission or Committee (collectively Board) you are seeking appointment to provides City reimbursement for attending trainings or conferences. Therefore, under State Law all members of the Board must receive at least two hours of ethic's training, as prescribed by the Fair Political Practices Commission, within one year of appointment and once every two years thereafter.

First Choice

FIRST choice for Board/Commission/Committee appointment:

HOUSING BOARD

Describe any qualifications, experience, and education, as well as any technical or professional background you may have relative to the duties of this position.

Having worked in hospitals doing physical therapy during my college years, and later in my private practice here in Burbank, I have learned to appreciate our differences and enjoy working with varieties of people.

What are your goals in serving on this Board/Commission/Committee?

To be of service to our local community needs, to be a positive part of our city of Burbank!

Second Choice

SECOND choice for Board/Commission/Committee appointment:

Whatever is needed, or that I can be of positive service.

Describe any qualifications, experience, and education, as well as any technical or professional background you may have relative to the duties of this position

Listed above.

What are your goals in serving on this Board/Commission/Committee?

To be a helpful and positive influence.

Supplemental Questions

Acknowledgement

Acknowledgment No. 1 - General

ALL INFORMATION SUBMITTED IS A PUBLIC RECORD AND WILL BE POSTED ON THE CITY'S WEBSITE. All City Board, Commission, and Committee members serve without compensation from the City. No person shall serve at the same time on more than one Board, Commission or Committee. All applicants must be electors of, and actually reside in the City of Burbank, with the exception of the Burbank Cultural Arts Commission and the Sustainable Burbank Commission. (Per BMC Section 2-1-405, 2-1-406, 2-1-407)

☑ I Agree

Application Form

Profile

Leona
First Name

A
Middle Initial

Rollins
Last Name

[redacted]
Email Address

[redacted] St.
Home Address

Suite or Apt

Burbank
City

CA
State

91506
Postal Code

[redacted]
Primary Phone

Alternate Phone

City of Ventura
Employer

Housing Services
Job Title

Public Sector Management - Housing and Community Development
Occupation

Which Boards would you like to apply for?

Burbank Housing Corporation Board of Directors: Submitted

Length of time as a Burbank Resident:

4 Years and 4 Months

Burbank Registered Voter?

(•) Yes ( ) No

Interests & Experiences

Please tell us about yourself and why you want to serve.

Why are you interested in serving on a board, commission or committee?

I am passionate about advancing affordable housing solutions, inclusive economic development and smart growth initiatives. By having the opportunity to serve on the Burbank Housing Corporation Board of Directors, it would allow me to contribute my expertise in housing policy and program management to strengthen Burbank's affordable housing inventory, preserve neighborhood character and enhance overall community well-being.

Education

Master of Public Administration (In Progress) - California State University, Dominguez Hills - Estimated Completion: December 2027 Bachelor of Arts in Sociology - California State University, Dominguez Hills

Additional Pertinent Courses or Training

I have more than 15 years of progressive leadership in housing policy municipal planning, community development and civil rights enforcement. I currently serve as the Housing Services Manager for the City of Ventura where I lead the interdepartmental housing and homelessness strategies, administer the Community Development Block Grant (CDBG) and HOME Investment Partnership (HOME) programs and oversee multimillion dollar local, state and federal funding streams. I have spearheaded redevelopment projects including the acquisition and conversion of motels in permanent supportive housing leveraging public and private grant funding. I have extensive experience in nonprofit program leadership including managing a $100 million Emergency Renters Assistance Program in Los Angeles during the pandemic. Also, I have expertise in civil rights compliance and fair housing enforcement.

Other Pertinent Skills, Experience or Interests

I have experience in budgeting tools, interagency collaboration, local, state and federal grant administration and policy development.

Upload a Resume

Community Involvement

Specify current or prior service on a City Board, Commission or Committee:

Not Applicable

List Community activities in which you are involved:

I have extensive engagement with community organizations, housing authorities and nonprofit service providers across Los Angeles and Ventura Counties. I have delivered public workshops, council presentations and educational programs on anti-discrimination policies and fair housing rights. I have successfully built strong partnerships with regional stakeholders to align resources and services to ensure that we continue to increase our affordable housing stock while preserving our community charm.

If you are related to any City of Burbank employee(s), please state their name(s), relationship(s), and department(s). If you are not related to a City of Burbank employee, please put N/A.

Not Applicable

Conflict of Interest

Conflict of Interest:

Rules of law and ethics prohibit members from participating in and voting on matters in which they may have a direct or indirect conflict of interest including a financial interest. Are you aware of any potential conflicts of interest which may develop from your occupation or financial holdings in relation to your responsibilities as a member of the Board, Commission or Committee to which you seek appointment?

○ Yes ◉ No

If you answer yes, explain in detail any potential conflicts in the same manner as required by the Fair Political Practices Commission's Statement of Economic Interests (Form 700). (If you should have any questions about this matter or need further information as it relates to your situation, please advise the City Clerk prior to submitting your application.)

Not Applicable

AB 1234 Training

The Board, Commission or Committee (collectively Board) you are seeking appointment to provides City reimbursement for attending trainings or conferences. Therefore, under State Law all members of the Board must receive at least two hours of ethic's training, as prescribed by the Fair Political Practices Commission, within one year of appointment and once every two years thereafter.

First Choice

FIRST choice for Board/Commission/Committee appointment:

Burbank Housing Corporation Board of Directors

Describe any qualifications, experience, and education, as well as any technical or professional background you may have relative to the duties of this position.

With over 15 years of progressive leadership in housing policy, municipal planning, community development and civil rights enforcement, I bring extensive experience in designing and implementing strategic housing initiatives that reduce homelessness, expand affordable housing and strengthen community partnerships. As Housing Services Manager for the City of Ventura, I oversee multimillion dollar local, state and federal funding programs, advise City Council on housing and land policy and lead interdepartmental strategies that have successfully reduced homelessness by more than 70% in the past three years. My career also includes directing nonprofit fair housing enforcement programs, managing large-scare emergency rental assistance efforts and advancing civil rights compliance under state and federal law. I hold a Bachelor of Arts in Sociology from California State University, Dominguez Hills and I am currently pursuing a Master of Public Administration at the same institution, expected to be completed in December 2027.

What are your goals in serving on this Board/Commission/Committee?

My goal is to apply my leadership experience to support the Burbank Housing Corporation's mission in improving and preserving affordable housing. I plan to accomplish this goal by the following: (1) advancing equitable housing initiatives that address local needs; (2) strengthening collaboration and partnerships between the City, nonprofits, residents and other stakeholders; (3) contributing to data-driven policies that reduce homelessness and expand access to safe and affordable housing; and (4) ensuring decisions align with Burbank's long-term vision for sustainable and inclusive community development.

Second Choice

SECOND choice for Board/Commission/Committee appointment:

Describe any qualifications, experience, and education, as well as any technical or professional background you may have relative to the duties of this position

What are your goals in serving on this Board/Commission/Committee?

Supplemental Questions

Acknowledgement

Acknowledgment No. 1 - General

ALL INFORMATION SUBMITTED IS A PUBLIC RECORD AND WILL BE POSTED ON THE CITY'S WEBSITE. All City Board, Commission, and Committee members serve without compensation from the City. No person shall serve at the same time on more than one Board, Commission or Committee. All applicants must be electors of, and actually reside in the City of Burbank, with the exception of the Burbank Cultural Arts Commission and the Sustainable Burbank Commission. (Per BMC Section 2-1-405, 2-1-406, 2-1-407)

☑ I Agree

Leona A Rollins

LEONA A. ROLLINS

Greater Los Angeles | [redacted] | [redacted]

EXECUTIVE SUMMARY

A dynamic and equity-driven public sector leader with 15 years of progressive experience in housing policy, municipal planning, community development, and civil rights enforcement. With proven ability to develop and implement strategic initiatives, manage complex federal and state programs and lead multidisciplinary teams. A leader who has been recognized for building effective partnerships with elected officials, community organizations, and regional stakeholders. A leader who is passionate about smart growth, inclusive economic development, sustainability, preserving community character and the core values aligning with the vision of the community.

CORE COMPETENCIES

- Affordable Housing and Homelessness Policy
- Community Engagement and Public Speaking
- Data-Informed Decision Making
- Economic Development and Neighborhood Revitalization
- Federal and State Grant Administration
- Interagency and Interdepartmental Coordination
- Policy Design and Regulatory Compliance
- Staff Development and Executive Leadership
- Strategic and Long-Term Planning
- Urban Planning and Smart Growth

PROFESSIONAL EXPERIENCE

City of Ventura – Ventura | Housing Services Manager | Jul. 2022 – Present

- Lead the implementation of the City's multi-year Housing Element and drive interdepartmental strategies that prioritizes affordable housing, homelessness services, and community development.
- Administer and oversee federal funding programs including Community Development Block Grant (CDBG) and HOME Investment Partnership (HOME) programs, ensuring community alignment and compliance.
- Serve as lead advisor and subject matter expert to City Council and City leadership on housing policy, homelessness trends, and land use planning initiatives.
- Lead a citywide strategy that reduced homelessness in the City by 32% over three years by expanding emergency and interim shelter capacity, increasing

homelessness prevention funding, and prioritizing investments in affordable and permanent supportive housing.
- Collaborated with regional agencies, service providers, and developers to align funding, land use, and wrap-around services under a unified housing-first approach.
- Successfully leveraged state and federal resources to increase local capacity and accelerate housing placements for individuals and families experiencing homelessness.
- Spearheaded the acquisition and redevelopment of a 142-room motel into 134 units of permanent supportive housing through Project Homekey, leveraging HOME-American Rescue Plan (HOME-ARP) and Permanent Local Housing Allocation (PLHA) funds.
- Conduct ongoing outreach and coordination with County departments, housing authorities, nonprofits, and resident groups to build consensus and solve complex development challenges.

Housing Rights Center – Los Angeles | Program Director | Feb. 2021 – Jul. 2022
- Directed state fair housing enforcement initiatives under contract with the California Civil Rights Department, implementing statewide testing programs to ensure civil rights compliance.
- Delivered data-driven reporting and strategic recommendations to local governments and regional agencies.

Housing Rights Center – Los Angeles | Program Manager | May 2020 – Jan. 2021
- Oversaw a $100 million Emergency Renters Assistance Program (ERAP) in partnership with the City of Los Angeles, providing rental support to more than 50,000 individuals and families during the COVID-19 pandemic.
- Built systems for equitable distribution of funds and ensured rapid, accountable implementation across partners.

Housing Rights Center – Los Angeles | Director of Investigations | Oct. 2019 – Jul. 2022
- Supervised staff handling 3000+ housing discrimination complaints annually under the American Disability Act (ADA), Fair Housing Act (FHA), California Fair Employment and Housing Act (FEHA) and other local civil rights laws.
- Introduced reforms that increased case resolution efficiency and strengthened legal enforcement outcomes.

Housing Rights Center – Los Angeles | Director of Counseling | May 2015 – Sept. 2019
- Managed counseling and outreach services across 30 cities in Los Angeles and Ventura Counties.
- Conducted educational workshops and presentations for City departments, elected bodies, and housing providers on rights, responsibilities, and anti-discrimination policies.

Housing Rights Center – Los Angeles | Case Analyst | Aug. 2010 – May 2015

- Investigated housing discrimination complaints and facilitated mediation or litigation support in coordination with legal partners and local agencies.

EDUCATION

California State University, Dominguez Hills | Bachelor of Arts in Sociology
Concentration: Ethnic and Racial Disparities and Social Injustices

TECHNICAL AND SYSTEM PROFICIENCIES

- Adobe Acrobat
- Budgeting Tools
- Case Management System
- Data Reporting Platforms
- Microsoft Office Suite

Application Form

Profile

Danny
First Name

J
Middle Initial

Alas
Last Name

[redacted]
Email Address

[redacted] Ave
Home Address

[redacted]
Suite or Apt

Burbank
City

CA
State

91501
Postal Code

[redacted]
Primary Phone

Alternate Phone

ColdSpace Technologies
Employer

Founder/Director of Technology
Job Title

Business Owner/Systems Engineer
Occupation

Which Boards would you like to apply for?

Burbank Housing Corporation Board of Directors: Submitted

Length of time as a Burbank Resident:

1 Year

Burbank Registered Voter?

(•) Yes ( ) No

Interests & Experiences

Please tell us about yourself and why you want to serve.

Why are you interested in serving on a board, commission or committee?

I am passionate about strengthening communities through responsible housing initiatives and ensuring that every family has access to safe, stable, and affordable housing. With my background in technology, property management support, and community-focused service, I have seen first-hand how reliable housing forms the foundation for opportunity, stability, and growth. Serving on the board is an opportunity to give back to the City of Burbank, contribute my skills in problem-solving and organizational leadership, and support efforts to preserve and improve affordable housing. I believe in the mission of the Burbank Housing Corporation and want to help ensure that our city remains inclusive, supportive, and forward-looking for residents of all income levels.

Education

I completed coursework in Business and Information Technology at Los Angeles Valley College and earned my high school diploma from Verdugo Hills High School. My professional development has included extensive training in Microsoft 365 and Azure administration, along with hands-on certifications in cybersecurity and data protection using platforms such as SentinelOne, CrowdStrike, and ESET. In my career, I served as IT Director overseeing both property management operations and the construction of mid-rise multifamily apartment buildings, many of which included dedicated units for low-income housing. I remain committed to ongoing professional growth in leadership, housing technology, and community engagement to ensure my skills continue to benefit the community.

Additional Pertinent Courses or Training

Other Pertinent Skills, Experience or Interests

In addition to my background in IT and property management, I bring extensive experience in project leadership, vendor management, and community-focused technology planning. I have led teams through critical initiatives such as ransomware recovery, large-scale system migrations, and cybersecurity improvements, always with an emphasis on trust, transparency, and collaboration. My work in property management and construction has given me first-hand understanding of how affordable housing developments are designed, operated, and supported, and how technology can play a role in keeping them secure, efficient, and accessible. I also have a strong interest in community engagement and enjoy partnering with local organizations to strengthen neighborhoods and create opportunities for families.

Upload a Resume

Community Involvement

Specify current or prior service on a City Board, Commission or Committee:

I have not previously served on a City Board, Commission or Committee

List Community activities in which you are involved:

I am an avid member of the Burbank Chamber of Commerce

If you are related to any City of Burbank employee(s), please state their name(s), relationship(s), and department(s). If you are not related to a City of Burbank employee, please put N/A.

N/A

Conflict of Interest

Conflict of Interest:

Rules of law and ethics prohibit members from participating in and voting on matters in which they may have a direct or indirect conflict of interest including a financial interest. Are you aware of any potential conflicts of interest which may develop from your occupation or financial holdings in relation to your responsibilities as a member of the Board, Commission or Committee to which you seek appointment?

○ Yes ◉ No

If you answer yes, explain in detail any potential conflicts in the same manner as required by the Fair Political Practices Commission's Statement of Economic Interests (Form 700). (If you should have any questions about this matter or need further information as it relates to your situation, please advise the City Clerk prior to submitting your application.)

AB 1234 Training

The Board, Commission or Committee (collectively Board) you are seeking appointment to provides City reimbursement for attending trainings or conferences. Therefore, under State Law all members of the Board must receive at least two hours of ethic's training, as prescribed by the Fair Political Practices Commission, within one year of appointment and once every two years thereafter.

First Choice

FIRST choice for Board/Commission/Committee appointment:

Director

Describe any qualifications, experience, and education, as well as any technical or professional background you may have relative to the duties of this position.

I bring over a decade of experience in technology leadership, property management support, and construction project oversight. As an IT Director, I have overseen both property management operations and the development of mid-rise multifamily apartment buildings, many of which included dedicated affordable housing units. This experience has given me a practical understanding of the challenges and opportunities involved in building, maintaining, and supporting housing that serves low- and moderate-income families.

What are your goals in serving on this Board/Commission/Committee?

My primary goal in serving on this Board is to support the mission of preserving and expanding affordable housing opportunities for low- and moderate-income families in Burbank. I want to contribute my background in property management, construction, and technology to help ensure that our housing developments are sustainable, well-managed, and meet the needs of the community. I also aim to strengthen collaboration between residents, local organizations, and city resources so that affordable housing is not only available, but also serves as a foundation for stability, growth, and opportunity. By applying my leadership and technical expertise, I hope to bring fresh perspective and practical solutions to challenges in housing, while working with fellow board members to uphold transparency, accountability, and long-term success.

Second Choice

SECOND choice for Board/Commission/Committee appointment:

Describe any qualifications, experience, and education, as well as any technical or professional background you may have relative to the duties of this position

What are your goals in serving on this Board/Commission/Committee?

Supplemental Questions

Acknowledgement

Acknowledgment No. 1 - General

ALL INFORMATION SUBMITTED IS A PUBLIC RECORD AND WILL BE POSTED ON THE CITY'S WEBSITE. All City Board, Commission, and Committee members serve without compensation from the City. No person shall serve at the same time on more than one Board, Commission or Committee. All applicants must be electors of, and actually reside in the City of Burbank, with the exception of the Burbank Cultural Arts Commission and the Sustainable Burbank Commission. (Per BMC Section 2-1-405, 2-1-406, 2-1-407)

☑ I Agree

Danny Alas

Greater Los Angeles Area – [redacted]

PROFESIONAL EXPERIENCE

Lyon Living, Newport Beach, CA 2021 – Present

Director, IT (2023-2024)

- Managed a $2M IT Budget across a portfolio of 35 Multi-Family properties, 3 luxury hotels, 2 single family developments, and a 5000 acre country club.
- Managed a team of 3 technicians supporting 550 users.
- Rebuilt Cyber Security stature after recovering from a Ransomware attack.
- Build and maintained SOP, DR, IR, and BC plans.
- Implemented Cyber Security best practices while rebuilding the IT department after separating from an MSP.
- Cut operational budget by 150K, while increasing our network uptime to 99.98% (Operational hours are only 8AM-6PM)
- Planned, prioritized, and steered 20+ projects with complete transparency to stakeholders.

Network Engineer (2021-2023)

- Standardized network configurations and implemented vlan and subnet segmentation for increased security.
- Deployed managed public wifi for community spaces
- Replaced all aging switches and firewalls with new NGFW technology
- Charged with building, configuring, installing, managing, and monitoring networking and IP telephony infrastructure-related hardware and software

Turner Techtronics Inc., Burbank, CA 2018-2021

Executive Support/NOC Lead/Projects Lead (2018-2021)

- (Warner Bros Contract) Co-Managed IT support for Executive building and Global Marketing Building. Assisting C-Level and high ranking employees on-site with all levels of IT support.
- (20th Century FOX Contract) NOC Lead of the overnight shift. Managed a team of 8 NOC Agents. Oversaw uptime and first response of all network outages across the global FOX operations.
- (Disney Contract) NOC Lead/Project Deployment Lead, Converted old FOX Offices to be used as new Disney offices. Trained and performed knowledge transfer of all FOX networking locations to new Disney DTOC.

Geek Squad, Burbank, CA 2016-2019

Advanced Repair Agent (2016-2019)

- Performed triage and break/fix repairs in a customer service focused environment that prioritized efficiency.
- Lowered Ticket Completion time from 5+ Days to 2 Days.

Skills

- Cisco
- Microsoft
- LAN/WAN
- TCP/IP Networking
- Aruba
- SonicWall
- Active Directory
- Windows Server
- Ubiquiti
- Leadership
- VMWare vSphere
- FortiGate

Application Form

Profile

Samuel
First Name

Middle Initial

Kuiumdjian
Last Name

[redacted]
Email Address

[redacted] Ave
Home Address

[redacted]
Suite or Apt

Burbank
City

CA
State

91501
Postal Code

[redacted]
Primary Phone

Alternate Phone

BLDG Partners
Employer

Vice President of Acquisitions
Job Title

Affordable Housing Acquisitions
Occupation

Which Boards would you like to apply for?

Burbank Housing Corporation Board of Directors: Submitted

Length of time as a Burbank Resident:

31

Burbank Registered Voter?

(•) Yes ( ) No

Interests & Experiences

Please tell us about yourself and why you want to serve.

Why are you interested in serving on a board, commission or committee?

I was born and raised in Burbank and have seen firsthand, throughout my career, how important affordable housing is for keeping our community strong and diverse. I'd like to give back by using my real estate and housing background to support the Burbank Housing Corporation's mission and make a positive impact locally.

Education

Bachelors of Science in Policy, Planning, and Development from the University of Southern California Emphasis in Real Estate Development Minor in Real Estate Finance

Additional Pertinent Courses or Training

Real estate investment and financial modeling LIHTC and affordable housing compliance training Leadership and management workshops

Other Pertinent Skills, Experience or Interests

Experience acquiring and managing affordable housing properties Strong skills in financial analysis, budgeting, and long-term planning Knowledge of housing programs, financing, and regulations Passion for community development and creating opportunities through housing

Upload a Resume

Community Involvement

Specify current or prior service on a City Board, Commission or Committee:

No prior service on a City Board, Commission, or Committee.

List Community activities in which you are involved:

Lifelong Burbank resident with strong ties to the local community, including Providence High School and local churches.

If you are related to any City of Burbank employee(s), please state their name(s), relationship(s), and department(s). If you are not related to a City of Burbank employee, please put N/A.

N/A

Conflict of Interest

Conflict of Interest:

Rules of law and ethics prohibit members from participating in and voting on matters in which they may have a direct or indirect conflict of interest including a financial interest. Are you aware of any potential conflicts of interest which may develop from your occupation or financial holdings in relation to your responsibilities as a member of the Board, Commission or Committee to which you seek appointment?

○ Yes ◉ No

If you answer yes, explain in detail any potential conflicts in the same manner as required by the Fair Political Practices Commission's Statement of Economic Interests (Form 700). (If you should have any questions about this matter or need further information as it relates to your situation, please advise the City Clerk prior to submitting your application.)

AB 1234 Training

The Board, Commission or Committee (collectively Board) you are seeking appointment to provides City reimbursement for attending trainings or conferences. Therefore, under State Law all members of the Board must receive at least two hours of ethic's training, as prescribed by the Fair Political Practices Commission, within one year of appointment and once every two years thereafter.

First Choice

FIRST choice for Board/Commission/Committee appointment:

Board member - Burbank Housing Corporation

Describe any qualifications, experience, and education, as well as any technical or professional background you may have relative to the duties of this position.

I have a background in real estate and affordable housing, with recent experience in acquisitions, financing, and asset management of affordable housing properties. My skills include financial analysis, budgeting, and long-term planning. I hold a B.S. in Business Administration from The University of Southern California and have completed training in real estate investment and housing compliance. Born and raised in Burbank, I bring both local perspective and professional expertise to this role.

What are your goals in serving on this Board/Commission/Committee?

My goal is to support the Burbank Housing Corporation in preserving and expanding affordable housing so that longtime residents, working families, and future generations can continue to call Burbank home. I also want to contribute my real estate and financial experience to help guide responsible decision-making and ensure the long-term stability of the organization.

Second Choice

SECOND choice for Board/Commission/Committee appointment:

Describe any qualifications, experience, and education, as well as any technical or professional background you may have relative to the duties of this position

What are your goals in serving on this Board/Commission/Committee?

Supplemental Questions

Acknowledgement

Acknowledgment No. 1 - General

ALL INFORMATION SUBMITTED IS A PUBLIC RECORD AND WILL BE POSTED ON THE CITY'S WEBSITE. All City Board, Commission, and Committee members serve without compensation from the City. No person shall serve at the same time on more than one Board, Commission or Committee. All applicants must be electors of, and actually reside in the City of Burbank, with the exception of the Burbank Cultural Arts Commission and the Sustainable Burbank Commission. (Per BMC Section 2-1-405, 2-1-406, 2-1-407)

☑ I Agree

SAM KUIUMDJIAN

PROFESSIONAL SUMMARY

Acquisitions executive with over a decade of experience leading $1.3B+ in multifamily and affordable housing transactions across 10 states. Proven track record in sourcing, underwriting, and closing LIHTC, Section 8, and middle-income bond deals, with deep expertise in financial analysis, risk management, and portfolio growth. Experienced leader managing analyst teams, associates, and cross-functional executives to drive strategic acquisitions, refinancings, and dispositions.

PROFESSIONAL EXPERIENCE

BLDG Partners — Los Angeles, CA
Vice President of Acquisitions *Dec 2021 – Present*

- Expanded company portfolio from 1,851 to 4,957 units through $748M in affordable housing acquisitions across 7 states by originating and closing both off-market and marketed opportunities via strategic broker and lender relationships.
- Designed and implemented process improvements that reduced property transition timelines by 15%, including active post-closing involvement to ensure seamless handoff to asset management and successful execution of business plans.
- Directed due diligence, financial analysis, property condition assessments, and risk mitigation while managing analysts, associates, and 3rd-party executives to drive successful deal execution and portfolio growth.
- Oversaw lender reporting for challenged bridge and balance sheet debt, redirecting property performance to enable profitable refinance or exit solutions.
- Led analysis and completion of capital call requests for two assets, securing investor funding to support property stabilization.
- Managed property dispositions, loan refinances, and insurance procurement/renewal, consistently securing cost-effective outcomes.

M West Holdings — Los Angeles, CA
Acquisitions Associate *Aug 2015 – Dec 2021*

- Executed $578M in multifamily acquisitions, adding 1,800 units across California and Oregon from underwriting through closing.
- Partnered with the Head of Asset Management to oversee a 2.3M SF portfolio of 1,900+ units and 100+ commercial tenants across California, New York, Florida, and Texas, making strategic decisions to optimize performance and asset value.
- Spearheaded financing for 35 transactions, securing more than $750M in debt through agency, bridge, and CMBS lenders.
- Collaborated with asset management, property management, and finance teams to deliver detailed investor and lender reporting, including variance analysis, capital expenditure tracking, and annual portfolio performance reviews.

SAM KUIUMDJIAN

Compass Acquisition Partners — Los Angeles, CA
Analyst, Intern *Apr 2015 – Jul 2015*

- Analyzed a 2,500+ unit portfolio to identify income growth opportunities through review of income statements, budgets, rent rolls, and market performance.
- Underwrote multifamily acquisitions and contributed pricing recommendations, supporting successful closings.
- Participated in due diligence for a 145-unit acquisition, including property inspections and lease audits.

Rosano Partners — Los Angeles, CA
Research Analyst / Marketing Coordinator *Sep 2013 – Apr 2015*

- Built Excel underwriting templates that streamlined analysis for new listings across corporate offices.
- Led corporate rebranding by redesigning marketing materials to strengthen brand identity.
- Researched U.S. Census and CoStar data to deliver market insights for client presentations.

MJW Investments — Los Angeles, CA
Asset Management & Acquisitions Analyst, Intern *Jan 2013 – Aug 2013*

- Supported $50M in multifamily acquisitions through market research, underwriting, and broker relationships.
- Identified hundreds of potential university housing acquisitions to expand the firm's $350M student housing portfolio.

EDUCATION & AFFILIATIONS

University of Southern California, Los Angeles, CA 2015
B.S. in Policy, Planning, and Development — Real Estate Development
Minor: Real Estate Finance

USC Marshall Real Estate Finance Association 2014 – 2015

USC Trojan Real Estate Association 2012 – 2014

USC Armenian Student Association Executive Board 2012 – 2015

TECHNICAL SKILLS

Core Competencies: Financial Modeling & Analysis, Deal Structuring, Portfolio Strategy, Team Leadership

Tools: Excel (Advanced), Yardi, Adobe Creative Suite

Redevelopment Agency Resolution No. R-1878

REDEVELOPMENT AGENCY
OF THE
CITY OF BURBANK, CALIFORNIA

RA 40

RESOLUTION NO. R- 1878

A RESOLUTION OF THE REDEVELOPMENT AGENCY OF THE CITY OF BURBANK AUTHORIZING THE FORMATION OF THE NON-PROFIT PUBLIC BENEFIT CORPORATION, BURBANK HOUSING CORPORATION.

THE REDEVELOPMENT AGENCY OF THE CITY OF BURBANK FINDS:

A. The Redevelopment Agency of the City of Burbank ("Agency") is required to spend 20% of the tax increment generated from the project area to increase and improve the community's supply of affordable housing for persons of low and moderate income.

B. The Agency acquired and rehabilitated several apartment buildings on the 100 West Elmwood Avenue block ("Elmwood Project") and is permitted by Health & Safety Code Section 33402 to own or operate rental property acquired and rehabilitated in prospect of resale for a reasonable period necessary to effectuate such resale.

C. Due to the Agency's significant financial investment in the Elmwood Project, the Agency desires to assist in the establishment of the Burbank Housing Corporation ("Corporation"), a non-profit corporation that could ultimately assume all operational obligations of the Elmwood Project.

THE REDEVELOPMENT AGENCY OF THE CITY OF BURBANK RESOLVES that the Assistant Executive Director or his designee, is authorized to act on behalf of the Agency, and may take all steps necessary to

K-1878

form the non-profit corporation called The Burbank Housing Corporation, as it is described in the staff report dated August 5, 1997.

PASSED and ADOPTED this 5th day of August, 1997.

Chairperson of the Redevelopment Agency of the City of Burbank

Attest:

Judie Sarquiz, Secretary

STATE OF CALIFORNIA)
COUNTY OF LOS ANGELES) ss.
CITY OF BURBANK)

I, Judie Sarquiz, Secretary of the Redevelopment Agency of the City of Burbank, do hereby certify that the foregoing Resolution was duly and regularly passed and adopted by the Redevelopment Agency of the City of Burbank at its regular meeting held on the 5th day of August 1997, by the following vote:

AYES: Council Members Golonski, McConkey, Murphy, Wiggins and Kramer.

NOES: Council Members None.

ABSENT: Council Members None.

Judie Sarquiz, Secretary

Housing Authority
Resolution No. H-209

HOUSING AUTHORITY
OF THE CITY OF BURBANK

RESOLUTION H-209

A RESOLUTION OF THE HOUSING AUTHORITY OF THE CITY OF BURBANK AFFIRMING THE CITY'S DESIGNATION THAT THE HOUSING AUTHORITY RETAIN HOUSING ASSETS AND FUNCTIONS PREVIOUSLY PERFORMED BY THE REDEVELOPMENT AGENCY OF THE CITY OF BURBANK

THE HOUSING AUTHORITY OF THE CITY OF BURBANK FINDS:

A. The Redevelopment Agency of the City of Burbank ("Redevelopment Agency") in accordance with Sections 33334.2 and 33334.3 of the Health and Safety Code requires the Redevelopment Agency to use 20 percent of taxes allocated to the Redevelopment Agency pursuant to Section 33670 of the Health and Safety Code for the purpose of increasing, improving, and preserving the community's supply of low and moderate income housing ("Low and Moderate Income Housing Fund").

B The Redevelopment Agency has continuously utilized its Low and Moderate Income Housing Fund for the purpose of increasing, improving and preserving the community's supply of low- and moderate-income housing available at affordable cost.

C The California Supreme Court, in its recent decision in the case of *California Redevelopment Association v. Matosantos*, has ruled that all redevelopment agencies in California shall be subject to liquidation and dissolution pursuant to Assembly Bill ("AB") X1 26.

D Specifically, AB X1 26 dissolves all existing redevelopment agencies as of February 1, 2012, such that the Redevelopment Agency of the City of Burbank shall be deemed as a former redevelopment agency under Health and Safety Code Section 34173(a).

E. Pursuant to Section 34176 of the Health and Safety Code, the City Council adopted on January 31, 2012, Resolution No 28,484, which designated the Housing Authority of the City of Burbank ("Housing Authority") as the entity to retain, without limitation, all of the housing assets, rights, powers, duties, obligations, liabilities and functions previously performed by the Redevelopment Agency upon the dissolution of the Redevelopment Agency

F. The Housing Authority desires to retain, without limitation, all of the housing assets, rights, powers, duties, obligations, liabilities and functions previously performed by the Redevelopment Agency upon the dissolution of the Redevelopment Agency.

G The City and the Redevelopment Agency of the City of Burbank ("Redevelopment Agency") entered into an agreement entitled "Agreement between the City of Burbank and the Redevelopment Agency of the City of Burbank Establishing Certain City-Agency Relationships" ("Agreement") on September 29, 1970, which provided for, among other things, certain activities, services and facilities which the City agreed to render for, and make available to, the Redevelopment Agency, subject to reimbursement to the City by the Redevelopment Agency of certain costs and expenses incurred by the City for and on behalf of the Redevelopment Agency. The Housing Authority of the City of Burbank will by operation of law succeed the Redevelopment Agency of the City of Burbank on February 1, 2012, and will retain without limitation, all of the housing assets, rights, powers, duties, obligations, liabilities and functions and will continue to require the City to provide certain activities, services, and facilities and to recognize its continued contractual obligations.

THE HOUSING AUTHORITY OF THE CITY OF BURBANK RESOLVES:

1. The foregoing recitals are true and correct.

2. Pursuant to Health and Safety Code Section 34176, the Housing Authority of the City of Burbank elects to retain, without limitation, all of the housing assets, rights, powers, duties, obligations, liabilities and functions previously performed by the Redevelopment Agency of the City of Burbank upon the dissolution of the Redevelopment Agency and hereby accepts the transfer to the Housing Authority of all of the housing assets, rights, powers, duties, obligations, liabilities and functions associated with the housing activities of the Redevelopment Agency.

3. The Executive Director of the Housing Authority is hereby authorized to make all notifications of such election as deemed necessary and to execute all documents and take all actions necessary and convenient to carry out and implement the transfer to the Housing Authority of the City of Burbank of, without limitations, all of the housing assets, rights, powers, duties, obligations, liabilities and functions previously performed by the Redevelopment Agency upon the dissolution of the Redevelopment Agency and to administer the Housing Authority's obligations, responsibilities and duties to be performed there under.

4. The Housing Authority reserves the right to revoke this designation at any time.

PASSED AND ADOPTED this 31st day of January 2012.

Jess A. Talamantes
Chairman of the Housing Authority of the
City of Burbank

Attest:

Margarita Campos, CMC, Clerk

Approved as to Form
Office of the City Attorney

By: Mary F Riley
Senior Assistant City Attorney

STATE OF CALIFORNIA)
COUNTY OF LOS ANGELES) ss.
CITY OF BURBANK)

I, Margarita Campos, CMC, Clerk of the Housing Authority of the City of Burbank, do hereby certify that the foregoing Resolution was duly and regularly passed and adopted by a majority vote of the Housing Authority of the City of Burbank at its regular meeting held on the 31st day of January 2012, by the following vote:

AYES: **Commissioners Bric, Gabel-Luddy, Golonski, Gordon and Talamantes.**

NOES: **Commissioners None.**

ABSENT: **Commissioners None.**

Margarita Campos, CMC, Clerk

STAFF REPORT

COMMUNITY DEVELOPMENT

DATE: October 14, 2025

TO: Justin Hess, City Manager

FROM: Patrick Prescott, Community Development Director
Danny Alvarez, Fire Chief
VIA: Mario Osuna, Assistant Community Development Director
James Moye, Fire Battalion Chief
BY: Russell Freesland, Plan Check Manager

SUBJECT: Introduction of an Ordinance to Adopt by Reference the 2025 California Building Standards Codes, California Wildland-Urban Interface, City of Burbank Local Amendments, and the 2024 International Property Maintenance Code, and any Amendments thereto, and Adoption of a Resolution Making Express Findings and Determinations that Modifications to the 2025 California Building Standards Code are Reasonably Necessary Due to Local Climatic, Geological, Topographical, or Environmental Conditions

RECOMMENDATION

1. Introduce AN ORDINANCE OF THE COUNCIL OF THE CITY OF BURBANK ADOPTING BY REFERENCE THE 2025 CALIFORNIA BUILDING STANDARDS CODE, CALIFORNIA WILDLAND-URBAN INTERFACE, CITY OF BURBANK LOCAL AMENDMENTS, AND THE 2024 INTERNATIONAL PROPERTY MAINTENANCE CODE, TOGETHER WITH CERTAIN AMENDMENTS, ADDITIONS AND DELETIONS THERETO, AND AMENDING PORTIONS OF TITLE 9 OF THE BURBANK MUNICIPAL CODE (Attachment 1).

2. Adopt A RESOLUTION OF THE COUNCIL OF THE CITY OF BURBANK MAKING EXPRESS FINDINGS AND DETERMINATIONS THAT MODIFICATIONS TO THE 2025 CALIFORNIA BUILDING STANDARDS CODE ARE REASONABLY NECESSARY BECAUSE OF LOCAL CLIMATIC, GEOLOGICAL, TOPOGRAPHICAL, OR ENVIRONMENTAL CONDITIONS (Attachment 2).

BACKGROUND

Every three years the State of California publishes a revised California Building Standards Code (CBSC) in Title 24 of the California Code of Regulations pursuant to California Health and Safety Code § 17922. These revisions are intended to improve life safety standards developed during the previous three years. The Community Development Department's Building and Safety Division and the Fire Department reviewed the proposed CBSC revisions to determine if they should be adopted in whole, or amended, as applicable to the current local climatic, geological, topographical, or environmental conditions within Burbank.

The CBSC includes 12 parts. The main parts are the California Building Code (CBC) in Part 2 and the California Fire Code (CFC) in Part 9. Accompanying the Fire Code is a map that designates the Fire Hazard Severity Zones in the Local Responsibility Area of the City of Burbank, which was adopted by City Council on June 03, 2025.

The 2025 CBSC goes into effect statewide on January 1, 2026. Cities are required to adopt the CBSC by reference by that date and may adopt local amendments that are reasonably necessary because of local climatic, geological, topographical, or environmental conditions. All new plan check and building permit applications submitted after January 1, 2026, must comply with the new construction standards in the CBSC. In addition to the CBSC, the City adopts the 2024 International Property Maintenance Code (IPMC) as the foundation for its Code Compliance program. The IPMC contains minimum maintenance standards for basic equipment, light, ventilation, heating, sanitation, and fire safety. Lack of compliance with the IPMC is grounds for violation of the Burbank Municipal Code (BMC).

DISCUSSION

While State law mandates enforcement of Title 24, local jurisdictions are authorized to adopt more restrictive requirements, provided they make express findings and determinations demonstrating such changes are reasonably necessary due to local climatic, geological, topographical, or environmental conditions. The City's local amendments are referenced in Title 9 of the BMC. A matrix of the City's findings justifying the local amendments is included with the Resolution (Attachment 2).

For the 2025 code adoption cycle, the scope of local amendments will be more limited than in previous years due to recent amendments to Health and Safety Code § 17958 and 17958.5, enacted through AB 130, that limit local jurisdictions' ability to modify state building standards, particularly those applicable to residential construction. AB 130 imposes a temporary restriction period from October 1, 2025, to June 1, 2031, on local amendments. During this period, jurisdictions may only adopt or modify residential standards if certain narrow exceptions are met, such as continuation of pre-existing amendments, emergency safety measures related to wildfire safety/home-hardening

provisions, or administrative process improvements. These changes signal the State's intent to streamline residential development standards and reduce regulatory variation across jurisdictions, particularly in support of housing production goals. As such, the City's proposed local amendments for this code cycle have been carefully reviewed to ensure consistency with the new legal limitations and to preserve only those amendments that have been vetted in previous code adoption cycles.

Significant State-Level Updates

In response to the intensifying frequency and severity of wildfires across California, specifically in areas where development meets wildland vegetation, the State has taken further steps to strengthen fire safety regulations. A significant change in the 2025 CBSC is the addition of the California Wildland-Urban Interface (WUI) Code as Part 7. This addition reflects a stronger recognition of the growing wildfire threat and the need for comprehensive and enforceable strategies to mitigate risk in vulnerable areas. The inclusion of this code exemplifies the importance of proactive planning, site design, and construction practices that improve community resilience in the face of wildfire events.

As part of recent updates to the Fire Hazard Severity Zone (FHSZ) mapping conducted by Cal Fire, the City of Burbank's designated fire zones have been reclassified into three severity levels: Moderate, High, and Very High. This updated mapping reflects a refined understanding of wildfire risk based on topography, vegetation, weather patterns, and historical fire data. Importantly, under the 2025 code cycle, all Wildland-Urban Interface (WUI) Code requirements will apply uniformly across all three severity zones, not just the Very High zones as in prior years. This change effectively extends the area subject to WUI building standards in the hillside further south from Kenneth Road and in the Media District north of the 134 Freeway, significantly increasing the number of properties protected by enhanced fire safety regulations. These requirements include defensible space provisions, fire-resistant building materials, and site access standards designed to mitigate wildfire risks and improve community resilience. The expanded applicability of the WUI Code ensures a more comprehensive and proactive approach to fire protection in Burbank's vulnerable interface areas.

Additional changes from the Building Code are included in the Significant Changes (Attachment 4).

Proposed Local Amendments

As part of this adoption cycle, staff is proposing to re-adopt existing, previously vetted local amendments that are currently in effect and have been consistently upheld in prior code cycles. Furthermore, staff is proposing administrative updates of code section references and removing amendments that are no longer applicable. Lastly staff is proposing amendments to important requirements in the area of brush clearance in the Wildland-Urban Interface regions of Burbank. Burbank's existing amendments have

undergone thorough technical and legal review and remain relevant to the City's specific local conditions. Notably, the proposal includes the continued adoption of seismic safety provisions recommended by the Los Angeles Basin Chapter of the International Code Council (ICC). These amendments are designed to address the unique seismic risks present throughout the Southern California region and are widely recognized as best practices among jurisdictions within the Los Angeles Basin. Their continued implementation ensures that local building standards reflect the most current understanding of regional seismic vulnerabilities while maintaining consistency with standards already in place. Re-adopting these established provisions supports both public safety and regulatory continuity.

Burbank Fire Department is proposing a local amendment that prohibits the use of metal cutting blades that produce sparks for brush clearance operations within the Fire Hazard Severity Zones. The amendment mandates the use of non-ferrous, non-sparking blades to reduce the risk of wildfire ignition and establishes specific fire safety protocols during brush work. These include restrictions on operations during Red Flag conditions, requirements for immediate fire suppression tools to be available on-site, such as a fire-extinguisher or pressurized hose within 10 feet, emergency communication capability via a charged cell phone capable of dialing 911, and trained personnel presence. Violations are subject to escalating penalties, including fines. This proposed code amendment adopts these safety standards to enhance wildfire prevention measures locally.

ENVIRONMENTAL REVIEW

The code adoption is determined to be categorically exempt under § 15061(b)(3) of the California Environmental Quality Act (CEQA) Guidelines in that it can be seen with certainty that there is no possibility the proposed project would have a significant effect on the environment.

BOARD OF BUILDING AND FIRE CODE APPEALS

Staff introduced the 2025 code adoption to the Board of Building and Fire Code Appeals at the meeting on September 11, 2025. The Board of Building and Fire Code Appeals recommended adoption of the CBSC, California WUI, the 2024 International Property Maintenance Code, and the City’s local amendments to such codes.

FISCAL IMPACT

There is no fiscal impact associated with this report.

CONCLUSION

Based upon requirements of State law, staff recommends adoption of the proposed resolution and introduction of the ordinance. Should Council not take any action, the State code still goes into effect as published on January 01, 2026, but it would lack the City’s

local amendments and references in the Burbank Municipal Code that were previously in effect, which enhance local building, fire safety, and occupancy.

ATTACHMENTS

Attachment 1 – Ordinance
Attachment 2 – Resolution
Attachment 3 – Resolution, Exhibit A
Attachment 4 – Significant Changes

ORDINANCE NO. _____

AN ORDINANCE OF THE COUNCIL OF THE CITY OF BURBANK ADOPTING BY REFERENCE THE 2025 CALIFORNIA BUILDING STANDARDS CODE, CALIFORNIA WILDLAND-URBAN INTERFACE, CITY OF BURBANK LOCAL AMENDMENTS, AND THE 2024 INTERNATIONAL PROPERTY MAINTENANCE CODE, TOGETHER WITH CERTAIN AMENDMENTS, ADDITIONS AND DELETIONS THERETO, AND AMENDING PORTIONS OF TITLE 9 OF THE BURBANK MUNICIPAL CODE

City Attorney's Synopsis

This Ordinance amends portions of Title 9, Chapters 1 and 2, of the Burbank Municipal Code to adopt by reference the 2025 California Building Standards Code and other related codes, all of which are mentioned in the title. The Ordinance further sets forth local amendments to certain statewide building standards. Through the adoption of Resolution No. ____, the Council made express findings and determinations that certain amendments to those statewide standards are reasonably necessary due to local climatic, geological, topographical, or environmental conditions. Additional modifications provide for certain administrative amendments. This Ordinance has been found to be exempt under Section 15061(b)(3) of the California Environmental Quality Act Guidelines in that it can be seen with certainty that there is no possibility the proposed ordinance would have a significant effect on the environment.

THE COUNCIL OF THE CITY OF BURBANK FINDS AS FOLLOWS:

A. The California Building Standards Code is updated by the California Building Standards Commission approximately every three years based upon published model codes specified in the California Health and Safety Code.

B. The California Building Standards Commission published the 2025 California Building Standards Code on July 1, 2025, and it will go into effect January 1, 2026.

C. California Health and Safety Code sections 17922 and 17958 require local entities to adopt by reference the California Building Standards Code as set forth in Title 24 of the California Code of Regulations.

D. Pursuant to Health and Safety Code sections 17958 and 17958.5, cities and counties will automatically be subject to the California Building Standards Code unless they adopt amendments to it and make specific findings that such amendments are reasonably necessary because of climatic, geologic, topographical, or environmental conditions in their local areas.

E. The City has previously adopted by reference portions of prior editions of the California Building Standards Code and International Property Maintenance Code, with local amendments, additions, and deletions thereto. The City desires to reaffirm, as provided in Title 9 of the Burbank Municipal Code, that it has adopted by reference the most current versions of the California Building Standards Code and International Property Maintenance Code and is not subject to the provisions of the 2025 California Building Standards Code where such provisions are modified specifically to address local conditions in the City of Burbank.

THE COUNCIL OF THE CITY OF BURBANK DOES ORDAIN AS FOLLOWS:

Section 1. Incorporation of Findings. The City Council of the City of Burbank hereby finds that the above findings are true and correct and are hereby incorporated by reference.

Section 2. Amendment to B.M.C. Title 9, Chapter 1. Chapter 1 (Building) of Title 9 (Building Regulations) of the Burbank Municipal Code is hereby repealed, provided however that such repeal shall not affect or excuse any violations of said Chapter occurring prior to the effective date of this Ordinance. A new Chapter 1 of Title 9 of the Burbank Municipal Code is hereby added to read as follows:

"CHAPTER 1. BUILDING AND FIRE"

Article 1. BUILDING ADMINISTRATIVE STANDARDS

DIVISION 1. CITY OF BURBANK ADMINISTRATIVE STANDARDS

9-1-1-101: GENERAL
The provisions of this Article, including Division 1 (City of Burbank Administrative Code) and Division 2 (California Administrative Code), shall apply to all Articles within Chapter 1, Title 9 of the Burbank Municipal Code.

A. Title: This Chapter shall be known as the "City of Burbank Building Code." In this Chapter where the phrase "Building Code" or "CBC" appears, such phrase shall be construed to refer to the most recent edition of the California Building Standards Code, which includes the California Administrative Code, California Building Code, California Residential Code, California Electrical Code, California Mechanical Code, California Plumbing Code, California Energy Code, California Wildland-Urban Interface Code, California Historical Building Code, California Fire Code, California Existing Building Code, California Green Building Standards Code, and California Referenced Standards Code, as more fully described in and adopted in this Chapter.

B. Scope: This Article shall serve as the administrative, organizational and enforcement rules and regulations for the technical codes and other building, property, health and safety regulations within this title which regulates site preparation, construction, alteration, relocation, enlargement, replacement, repair, equipment, use and

occupancy, location, maintenance, grading, removal and demolition of buildings or structures or any appurtenances connected or attached to such buildings and structures. This article shall be referred to as the "City of Burbank Building Administrative Standards" or the "Building Administrative Code".

Except as changed or modified in this Chapter, the building standards which are published in the California Building Standards Code are applicable to all occupancies and uses within the City. Amendments to the building standards contained in the codes published by the model code organizations (ICC, IAPMO, and NFPA) by California state agencies, are applicable only to those occupancies or uses which the state agency making the amendment is authorized to regulate.

C. Intent: The purpose of this Chapter is to provide minimum standards to safeguard the public health, safety, and general welfare through structural strength, means of egress facilities, stability, sanitation, adequate light and ventilation, energy conservation, accessibility, sustainability, resiliency, and safety to life and property from fire and other hazards attributed to the built environment and to provide safety to firefighters and emergency responders during emergency operations.

Certain changes and modifications have been made during the City's adoption of the California Building Standards Code because of specific local conditions. The provisions of this Chapter are intended to confer a benefit on the community as a whole and are not intended to establish a duty-of-care toward any particular person.

This Chapter shall not be construed to hold the City of Burbank or any officer, employee or agent thereof responsible for any damage to persons or property by reason of any inspection authorized herein or by reason of the issuance or non-issuance of any permit authorized herein, and/or for any action or omission in connection with the application and/or enforcement of this Chapter. By adopting the provisions of this Chapter, the City does not intend to impose on itself, its employees or agents any mandatory duties-of-care toward persons and property within its jurisdiction so as to provide a basis of civil liability for damages.

This section is declaratory of existing law and is not to be construed as suggesting that such was not the purpose and intent of previous code adoptions.

D. Numbering. In order to provide consistency between this Chapter and the provisions of the California Building Standards Code, the section, subsection, and paragraph numbers or designations of the California Building Standards Code and its parts shall be retained in this Chapter to the extent applicable, and shall be preceded by a prefix referring to Title 9, Chapter 1, and the relevant Article number of the Burbank Municipal Code, followed by the Part number of the California Building Standards Code.

E. Inspection: Copies of codes adopted by reference throughout this Chapter are on file in the office of the Building and Safety Division and are available for public inspection.

9-1-1-102: DEFINITIONS.
For the purpose of this code, certain terms, phrases, words and their derivatives shall be construed as specified in this section.

Where terms are not defined, they shall have their ordinarily accepted meanings within the context with which they are used. Words used in the singular include the plural and the plural the singular. Words used in the masculine gender include the feminine and the feminine the masculine.

BUILDING OFFICIAL**:** The officer or other designated authority charged with the administration and enforcement of this code, or a duly authorized representative. “Building Official” shall be synonymous with the term “Assistant Community Development Director/Building Official” or “Building Director” of the City.

BUILDING SERVICE EQUIPMENT: Refers to plumbing, mechanical, electrical and elevator equipment, devices and installations including, but not limited to, piping, conduits, raceways, conductors, and fixtures which provide sanitation, lighting, heating, ventilation, cooling, refrigeration, firefighting and transportation facilities essential to the occupancy of the building or structure for its designated use. This term shall include "system service equipment".

FIRE OFFICIAL: The officer of other designated authority charged with the administration and enforcement of the Fire Code, or a regularly authorized deputy. Used herein, the term Fire Chief, or his or her designee, shall be construed to mean the fire official. Whenever the term or title "fire official" or other similar designation is used herein, it shall be construed to mean the fire official designated by the Council of the City of Burbank, as applicable in enforcing the administrative code as it pertains to the California Fire Code.

JURISDICTION: As used in this code, is the City of Burbank, California.

RESPONSIBLE PERSON: Includes all persons, whether as owners, lessees, occupants or others, who allow, cause, create, maintain, suffer, or permit a violation of the Burbank Municipal Code to exist or continue, by any act or the omission of any act or duty.

SUCCESSFUL INSPECTION: A required inspection (as set forth in Section 9-1-1-110 of this Chapter) in which work inspected was determined by the Building Official or designee thereof to meet all applicable minimum code requirements and the inspection was approved and documented as successful by the Building and Safety Division.

TECHNICAL CODES: Refer to those codes adopted by the City of Burbank containing the provisions for design, construction, alteration, addition, repair, removal, demolition, use, location, occupancy and maintenance of buildings and structures and building service equipment as herein defined.

VALUATION OR VALUE: As applied to improvements a building and its building service equipment, shall be the estimated cost to replace the building and its building service equipment in kind, based on current replacement costs. Valuation or value, as applied to building permit fees, shall mean the estimated fair market value of the cost of all construction work for which the permit is issued as determined by the Building Official. To determine the valuation, the Building Official may use the most current building valuation table published by the International Code Council, the mean of three (3) responsible bids from properly licensed contractors or any other commonly accepted method to estimate construction costs. Soft cost including design services shall not be incorporated unless a design-build project approach is used.

9-1-1-103: ORGANIZATION AND ENFORCEMENT

A. The Building and Safety Division is hereby established in the City of Burbank as the building, code enforcement, and licensing division under the administrative and operational control of the Building Official.

B. Building Official: Whenever the term or title "building administration manager", "code enforcement manager", "building inspection manager", "plan check manager", "responsible official", or other similar designation is used herein or in any of the technical codes, it shall be construed to mean the Building Official designated by the Community Development Director.

C. Fire Official: Whenever the term or title "Building Official" or other similar designation is used herein, it shall be construed to mean the Fire Official as applicable in enforcing the California Fire Code and local amendments thereto.

9-1-1-104: DUTIES AND POWERS OF THE BUILDING OFFICIAL

The building official shall have the following powers and duties, in addition to those powers and duties outlined in the CBC:

A. Emergency Powers:

1. Where the Building Official determines that an imminent life safety hazard exists in a building or with regard to a structure or premises, that requires immediate containment, correction or elimination, or other actions to protect public health and welfare, the Building Official or his/her designee may exercise any or all of the following powers in accordance with the provisions of the Burbank Municipal Code and applicable statues, codes and laws.

    a. Order the immediate vacation of all persons and prohibit the occupancy, reentry, or use of the premises until the hazard has been fully abated and all repairs and other corrective actions have been completed with all required permits and inspection approvals.
    b. Post the premises as unsafe, substandard or dangerous, and regulate or condition entries thereon by all persons until an order to vacate and/or an order to not enter is rescinded in writing.

c. Order or conduct the boarding, fencing or securing of the building, structure, or the premises.
d. Order or conduct the razing and grading of any portion of the building, structure, or site that involves the imminent life safety hazard to prevent further collapse in order to protect public health, safety and welfare.
e. Order or make emergency repairs or undertake other actions as necessary to eliminate, correct, or contain any imminent life safety hazard.
f. Cause any water, electrical, gas, mechanical, plumbing, or other system connections or installations that are, or could possibly be, affected by the hazard, or that could contribute to the hazard, to be disconnected or otherwise rendered inoperative.
g. Take any other action as appropriate under the circumstances.

2. The Building Official or his/her designee shall comply with the following provisions when exercising emergency powers:

   a. In determining the existence of an imminent life safety hazard, the Building Official or his/her designee shall conduct a personal inspection of the hazard and issue a brief written report identifying the nature, scope and condition of the hazard.
   b. The Building Official or his/her designee shall give notice, setting forth the imminent life safety hazard found, to the owner, occupant, other responsible person or authorized representative of the building, structure or site upon which the hazardous condition exists. If the Building Official or his designee determines that, under the circumstances, notice cannot first be given or it is impractical to do so because of the nature of the hazard, emergency powers may be exercised without prior notice.
   c. The nature and scope of emergency powers to contain, eliminate, or correct the imminent life safety hazard level, or to protect public health, safety and welfare shall be determined by the Building Official or his designee.

3. The Building Official or his/her designee may, notwithstanding the exercise of any emergency powers, alternatively or concurrently exercise any remedy to address violations of this title.

4. In any undertaking by the City to address or abate an emergency situation or imminent life safety hazard where the City expends funds in the undertaking of such abatement, the owner of a building, structure or property shall pay for the costs associated with the abatement.

5. Appeal from the Exercise of Emergency Powers: An owner or occupant of a premises that is subject to the Building Official’s actions under this section may appeal the Building Official's exercise of emergency powers or payment of abatement fees in accordance with the procedures set forth in Section 9-1-1-113 in the Burbank Municipal Code. A timely appeal shall not stay the effectiveness of an issued order to vacate and/or an order to not enter.

6. Violation: It shall be unlawful and a violation of this code for any person to fail to comply with an order to vacate and/or an order to not enter issued under this section.

9-1-1-105: PERMITS.
In addition to the provisions of Section 105 of Part 2 of the California Building Standards Code, the following provisions shall apply to work conducted pursuant to this Chapter.

A. Sandblasting: No person shall engage in any sandblasting on the inside or outside of any building or structure within the City without first making application, paying fees, and obtaining a permit from the Building Official. The sandblasting operation shall at all times be protected and separated from any adjoining property by canvas or other suitable barriers sufficient to prevent splashing or blowing of water or sand, or both. Failure to comply with any provision of this code shall be cause for the immediate revocation of any permit and the immediate stoppage of the sandblasting on any job.

1. Dry Sandblasting**.** Dry sandblasting is prohibited unless authorized by special permission of the Building Official endorsed upon the permit. Permission for dry sandblasting shall be granted only when it is not possible to employ wet sandblasting. When dry sandblasting is permitted, the Building Official may impose such conditions as he may deem necessary for the protection of the public and adjacent property.
2. Use of Canvas. Sandblasting operations shall at all times be separated from adjacent property by canvas or other suitable barrier to prevent the splashing or blowing of water or sand thereupon.
3. Stoppage of Work. The Building Official may order the immediate stoppage of sandblasting for failure to comply with any provision of this article. Disobedience of such order shall constitute a misdemeanor.
4. Pollution and Discharge Runoff. Sandblasting operations shall comply with the requirements of Title 9, Chapter 3, Article 4, Standard Urban Storm Water and Urban Runoff Management Programs, of this code.

B. Minor Repairs: Application or notice to the Building Official is not required for minor repairs, such as to structures, replacement of lamps or the connection of approved portable electrical equipment to approved permanently installed receptacles. Such repairs shall not include the cutting away of any wall, partition or portion thereof, the removal or cutting of any structural beam or load bearing support, or the removal, obstruction or change of any required means of egress, or rearrangement of parts of a structure affecting the egress requirements; nor shall minor repairs include addition to, alteration of, replacement or relocation of any standpipe, water supply, sewer, drainage, drain leader, gas, soil, waste, vent or similar piping, electric wiring or mechanical or other work affecting public health or general safety.

C. Demolition of Buildings and Structures: It shall be unlawful for any person to demolish any building or structure, or portion thereof, within the City without first obtaining a

permit from the Building Official. The amount of the fee for the permit shall be established by City fee resolution.

1. The permittee shall comply with the following requirements before a permit to perform demolition may be issued under this section:
   a. A construction fence shall be installed to screen the site from view on public property, if required by the Building Official. The composition, location and effectiveness of the proposed fence for screening purposes shall meet the approval of Building Official, which shall be confirmed in writing.
   b. Water service shall be maintained on the site for the duration of the demolition project and for any subsequent development or improvements on the subject property.
   c. When required by other provisions of this code, bonds and insurance shall be posted with the City.
   d. All utility companies shall be notified in writing by the owner of the property of the intention to demolish the building or structure.
   e. A permit shall be obtained to remove and fill any basement, pool, sump, or other depression in the surface of the lot or parcel of land.
   f. A permit shall be obtained to cap the sewer and any drains connecting to the building or structure. The sewer and drains shall be capped at the property line unless otherwise approved by the Building Official in writing. The sewer caps shall be inspected and approved by the Building Official.
   g. The building shall be inspected by qualified individuals for the presence of asbestos or other hazardous materials. If the building is found to contain asbestos or hazardous materials, the building owner or his representative shall submit a letter to the Building Official so stating. If the building is found to contain asbestos, then an asbestos abatement permit shall be obtained from the department upon submittal by the applicant of all necessary documentation as required by Rule 1403 of the South Coast Air Quality Management District. Demolition permits shall not be issued prior to submittal of an asbestos abatement completion certificate by qualified contractors and full abatement of other hazardous materials.
   h. The building shall be inspected for rats and rodent infestation and a report from qualified individuals that are acceptable to the Building Official shall be submitted attesting that the building is free of any rats or rodents prior to issuance of the demolition permit. If the building is found to be infested, then proper eradication measures by qualified individuals shall be implemented and a report attesting to the eradication of the rodent infestation shall be submitted prior to issuance of the demolition permit.
   i. A list of building addresses to be demolished with square footage and occupancy and use type.
   j. Confirmation of an approved haul route of vehicles associated with the demolition procedures.
   k. Any work related to the public right-of-way or streets shall first obtain approval from the Burbank Department of Public Works.
   l. Best Management Practice and Storm Water Pollution Prevention Plan measures shall be incorporated into the site during and following demolition.

m. A sign posted on site with contact information for the owner and project manager.
n. A schedule of the demolition with specific execution measures.
o. An onsite pre-construction meeting with City inspection staff and the demolition contractor.

2. Before a demolition permit shall receive final inspection approval and before the pertinent bonds are released, the following requirements shall be met:

   a. All concrete, weeds, debris, stones, or other loose material shall be removed from the lot or parcel of land.
   b. All basements, pools, tanks, sumps, or other subterranean structures shall be removed and backfilled and the lot properly graded.
   c. The fence, when required by the Building Official, is installed and inspected.

3. Completion of Demolition: The demolition activities authorized by a demolition permit issued for a project required by this section shall be commenced within one hundred eighty (180) days of permit issuance, and thereafter shall be diligently pursued to completion, otherwise the demolition permit shall be null and void, and of no further effect whatsoever.

4. Performance Bond: When a building is to be demolished, the permittee may be required to post a bond in compliance with the provisions of the Burbank Municipal Code as security for restoration of the site, or completion of the demolition. The amount of the bond shall be in an amount, as determined by the Building Official, which is sufficient to complete the demolition, or restore the site.

D. Responsible Person or Contractor of Record: When required by the Building Official, the contractor of record or a representative responsible person shall be present at the construction site at all times during the construction process. That person shall have the authority to address the concerns of neighboring property residents or occupants regarding the particular construction project. The names and telephone numbers of the contractor of record or the responsible person shall be conspicuously displayed at the construction site in a manner satisfactory to the Building Official.

E. Notice of Demolition/Construction: The property owner or the owner's representative shall post at the construction site a notice of intent to do grading, construction or demolition that is readily visible at least ten (10) days prior to issuance of permit whenever the Building Official determines that the grading, demolition, or construction work will have a significant impact on the surrounding properties.

F. Construction Parking and Hauling Restrictions: No hauling or construction related parking shall be permitted on a public street except as otherwise approved by the Building Official and City engineer, provided that the work described in an application for a permit, and the plans, specifications and other data filed therewith, conform to the requirements of this code, the technical codes and other pertinent laws and

ordinances, and that all applicable fees specified by the City's Fee Resolution have been paid. All hauling related to construction shall not be commenced without hauling permits from the City.

9-1-1-105.2: WORK EXEMPT FROM PERMIT:
Any exemption from a permit requirement as allowed by this code shall not be deemed to grant authorization for any work to be done in violation of the provisions of the building standards codes, zoning code, or any other laws or ordinances of this jurisdiction. Note: Exempt one-story, detached accessory buildings used as tool and storage sheds, playhouses and similar uses not exceeding 120 square feet shall not contain any heating, plumbing, or electrical installations or be used for the storage of any hazardous materials.

9-1-1-105.5.1: PERMIT EXPIRATION:

A. Expiration of Permit: A permit issued by the Building Official under the provisions of this code shall expire by limitation and become null and void unless work authorized by such permit is commenced within one hundred eighty (180) calendar days from the issuance date of such permit. However, a permit for residential occupancies shall expire 365 days from the date of application as stated in AB 2913 (Wood).

B. Expiration of Permit for Unlawful Structure: Notwithstanding any provision of this subsection or any other provision of this chapter, if a building permit was issued in order to bring an unpermitted structure or other unlawful, substandard, or hazardous condition into compliance with any applicable law, or ordinance, such permit shall expire by limitation and become null and void ninety (90) calendar days after the date on which the permit was issued. The Building Official may extend the validity of the permit for a period not exceeding ninety (90) calendar days beyond the initial ninety (90) day limit upon written request by the applicant filed with the Building Official prior to the expiration date of the original permit.

9-1-1-105.8: TO WHOM A PERMIT MAY BE ISSUED:

A. Issuance to State Licensees.
No permit shall be issued to any person doing any work regulated by the California Building Code except to a person holding a valid, unexpired and unrevoked State license to do such work.

B. Issuance to Owners.
Any permit required by this article may be issued to any person to do any construction or work regulated by the California Building Code in the event that such person is a bona fide owner of such property provided that the work is limited to:
1. A single-family dwelling of wood frame construction not more than two stories and basement in height.
2. Multiple dwellings containing no more than four dwelling units of wood frame construction not more than two stories in height. However, this shall not be construed as allowing an unlicensed person to construct multiple clusters of up to four dwelling units each to form apartment or condominium complexes where the total exceeds four units on any lawfully divided lot.

3. Garages or other structures appurtenant to buildings described under subdivision (1) of wood frame construction not more than two stories and basement in height.
4. Nonstructural or non-seismic alterations or additions.

9-1-1-105.9: APPEALS

Appeals of the Building Official's decision to suspend or revoke any permit issued under this Code may be appealed within 60 days of the date of mailing notice of such suspension or revocation as stated in Section 9-1-1-113 of this Chapter.

9-1-1-105.10: CONSTRUCTION HOURS:

The following construction hours shall apply to all construction, alteration, movement, enlargement, replacement, repair, equipment, maintenance, removal and demolition work regulated by this code:

Construction Hours:

Monday - Friday 7:00 a.m. to 7:00 p.m.
Saturday 8:00 a.m. to 5:00 p.m.
Sunday and City Holidays None

EXCEPTIONS:

1. Single-family residential owner-builder permits when work is performed solely by the owner and family members:
   Monday - Friday 7:00 a.m. to 7:00 p.m.
   Saturday 8:00 a.m. to 5:00 p.m.
   Sunday and City Holidays 8:00 a.m. to 5:00 p.m. for interior work only.
2. Where work must be performed in an emergency situation, as defined in Section 9-3-204 of the Burbank Municipal Code.
3. The Community Development Director may grant exceptions wherever there are practical difficulties involved in carrying out the provisions of this section or other specific onsite activity warrants unique consideration.
4. The Planning Board or City Council may grant exceptions pursuant to land use entitlements.

9-1-1-107: SUBMITTAL DOCUMENTS

A. Setback Certification Required:

A California State licensed surveyor is required to certify the location and setbacks of all new construction prior to the first foundation inspection. A copy of the certification shall be available to the Building and Safety Division inspector for the job file prior to the first inspection.

EXCEPTION: Wherever there are practical difficulties involved in carrying out the provisions of this section, the Building Official shall have the authority to grant modifications for individual cases.

B. Construction Means and Method Plan:

1. When required by the City of Burbank, a construction means and method plan shall be provided to the Building Official. The construction means and method plan required by this code shall provide the following information:
   a. A detailed description of the construction process, organized sequentially;
   b. An explanation of the impact that this construction will have on the adjacent properties, the immediate surrounding neighborhood and the community;
   c. A description of the construction mitigation measures that the owner will implement to minimize the impacts of noise, dust, vibrations, utility shutoffs, and other construction impacts on adjacent properties and the immediate surrounding neighborhood.

2. Compliance with Required Means and Method Plan:
   a. General: No person shall erect, construct, enlarge, alter, repair, move, improve, remove, sandblast or convert the use of any building, structure or building service equipment regulated by this code without complying with all conditions of any required construction means and methods plan.
   b. Owner's Responsibility: The property owner shall remain responsible for any violation of the construction means and method plan regardless of the responsibility of any other person for the violation or any contract or agreement the owner entered into with a third party concerning the owner's property or the construction that necessitated the preparation of the means and method plan.

9-1-1-107.3.1: APPROVAL OF CONSTRUCTION DOCUMENTS:
Section 107.3.1 of Chapter 1, Part 2, of the CBC is amended and restated as follows, and shall apply to all Articles in this Chapter:

> "**107.3.1 Approval of construction documents.** When the Building Official issues a permit the construction documents shall be approved, in writing or by stamp as "APPROVED". One set of construction documents so reviewed shall be retained by the Building Official. The other set shall be returned to the applicant, shall be kept at the site of work and shall be open to inspection by the Building Official or a duly authorized representative.
>
> Such approved plans and specifications shall not be changed, modified or altered without authorization from the Building Official, and all work regulated by this code shall be done in accordance with the plans marked "APPROVED"."

9-1-1-109: FEES.
In addition to the provisions of Section 109 of Part 2 of the California Building Standards Code, the following provisions shall apply to work conducted pursuant to this Chapter.

A. Fees associated with any action taken or required pursuant to this Chapter shall be assessed in accordance with the provisions of this section and as set forth in the Burbank Fee Resolution.

B. Exemption from fees. The City, any department or office thereof acting on behalf of the City, any municipal utility wholly owned by the City, and the Burbank Unified School District, shall be exempt from the payment of all fees required by the Building Code. However, this fee waiver does not exempt any party from obtaining a permit for such work nor exempt such party from conforming to the procedures established by the City nor from compliance with all applicable City ordinances or State laws regulating such work.

C. Fees for copies.

1. Fees for file copies. At the time of issuance of permit, the applicant shall pay a fee, as set forth in the Burbank Fee Resolution, to the Building Official for digital copies of the approved construction documents, or other format approved by the Building Official, to serve as the official file copy of the corrected plans.

2. Fees for reproduction of file copies. The reproduction fee for file copies of official plans retained on microfilm shall be as set forth in the Burbank Fee Resolution.

D. Relocated Buildings Fees and Bond.

The Building Official shall not issue a permit unless the provisions of the Burbank Municipal Code, insofar as applicable, have been complied with and until the permittee or an authorized agent shall have first deposited with the Building Official a cash bond in an amount equal to the estimated cost plus 10 percent of the work required to be done in order to comply with all of the conditions under which the permit is issued. Every such deposit made pursuant to this section shall be conditioned as follows:

1. Each and all of the terms and conditions of the permit shall be complied with to the satisfaction of the Building Official.
2. All of the work required to be done pursuant to the conditions of the permit shall be fully performed and completed within the time limit specified in the permit. If no time limit is specified, the work shall be completed within 90 days after the date of the issuance of the permit. The time limit herein specified in any permit issued under the provisions of this section may be extended for good and sufficient cause, either before or after said time period has expired, by written order of the Building Official.
3. If the permittee fails to fully perform and complete the work required to be done in order to comply with all of the conditions under which the permit is issued, or, if an extension or extensions have been granted by the Building Official, within the time specified in such extensions, the Building Official shall give written notice to the permittee of such default. Such notice of default shall state the work to be done, the estimated cost thereof, and the period of time deemed by the Building Official to be reasonably necessary for the completion of such work. If compliance is not had within the time specified, the Building Official shall proceed without delay and without further notice or proceeding whatever to cause the required work to be done and deduct from the cash bond deposited the cost of the work plus 10 percent which shall be retained by the City to cover administrative costs.

4. In lieu of completing the required work, the Building Official may demolish the building or structure and clear, clean, and restore the site and deduct from the cash bond deposited the cost of the work plus 10 percent thereof, which 10 percent shall be retained by the City to cover the administrative costs.
5. Every permittee accepting a permit hereunder shall agree to be bound by the above provisions without recourse to the City or any officer or Board of the City.
6. The term of each cash bond deposited pursuant to this section shall begin upon the date of deposit and shall end upon completion, to the satisfaction of the Building Official, of the performance of all the terms and conditions of this section. Upon such completion, the Building Official shall return the cash deposit to the depositor or the depositor's successors or assigns, except any portion thereof which may have been used or deducted as provided in this section.

9-1-1-109.4: INVESTIGATION FEES, WORK WITHOUT A PERMIT.

A. Investigation: Whenever work for which a permit is required by this code has been commenced without first obtaining a permit, a special investigation shall be made before a permit may be issued for such work.

B. Fee: Pursuant to Section 109.4 of Part 2 of the California Building Standards Code, an investigation fee, in addition to the permit fee, shall be collected whether or not a permit is then or subsequently issued. The investigation fee shall be equal to the amount of the permit fee required by this code. The payment of such investigation fee shall not exempt an applicant from compliance with all other provisions of either this code or the technical codes nor from the penalty prescribed by law.

9-1-1-109.6: REFUND POLICY:

A. Plan check fees. No portion of the plan check fee shall be refunded unless plan review has not been performed, in which case 80 percent of the plan check fee shall be refunded upon written application for refund submitted by the person who made original payment of such fee and with the written consent of the owner of the real property on which the work was proposed to be done. The Building Official shall determine, in such official's discretion, whether an applicant is qualified to receive a refund. After 180 days have elapsed from the date of the submittal for plan check, no plan check fees shall be refunded. In the event subsequent application for plan check is made by a person who has received a refund, the full amount of all required fees shall be paid as elsewhere provided in this chapter.

B. Permit fees. In the event any person shall have obtained a building permit and no portion of the work or construction covered by such permit shall have commenced, nor any inspection performed by any City employee, and notice of abandonment has been received from the owner of the real property on which such work would have been performed, the permittee, upon presentation to the Building Official of a written request for refund, shall be entitled to a refund in an amount equal to 80 percent of the building permit fee actually paid for such permit. The Building Official shall determine, in such official's discretion, whether an applicant is qualified to receive a

refund. After 180 days have elapsed from the date of the issuance of the permit, no permit fees shall be refunded. In the event subsequent application for a permit is made by a person who has received a refund, the full amount of all required fees shall be paid as elsewhere provided in this chapter.

EXCEPTION:

1. If a permit has been issued for a project located in an area outside the jurisdiction of the City, 100 percent of the permit and plan checking fee may be refunded.
2. If a duplicate permit has been erroneously issued, 100 percent of the duplicated permit and plan checking fee may be refunded.

9-1-1-110: INSPECTIONS.

In addition to the requirements contained in Section 110 of Part 2 of the California Building Standards Code, the following provisions shall apply to work completed pursuant to this Chapter.

A. Demolition, Excavation and Shoring Inspections: Reinforcing steel or structural framework of a part of a building or structure shall not be covered or concealed without first obtaining the approval of the Building Official. Protection of joints and penetrations in fire resistive assemblies shall not be concealed from view until inspected and approved.

The Building Official, upon notification, shall make the following inspections:

1. Demolition Inspection: To be made before demolition begins and after demolition is completed per approved plans but before construction, grading, or shoring is commenced.
2. Shoring and Excavation: To be made throughout and after shoring and excavations are complete and required before foundations are in place.
3. Basement and Subterranean Garage: To be made throughout and after the basement and subterranean footings and walls are in place.

B. Trades (Plumbing, Mechanical, Gas and Electrical Systems) Inspection: Rough inspection of plumbing, mechanical, gas and electrical systems shall be made prior to covering or concealment, before fixtures or appliances are set or installed, and prior to framing inspection.

C. Green Building Standards Inspection: To be made before work is concealed or made inaccessible based at the point in time when adequate stages of construction for the selected method of code compliance. Inspections shall be made to determine compliance with green building standards code and shall include, but not be limited to, inspections for site, parking, energy efficiency, water efficiency and conservation, material conservation and resource efficiency, and environmental quality.

D. Site Grading/Landscaping: To be made before work is concealed or made inaccessible. Underground irrigation system shall be inspected before landscaping is installed. Planting compliant with this code needs to be installed prior to final approval.

E. Equipment Inspections: Equipment for which a permit is required by this code shall be inspected by the Building Official. Equipment intended to be concealed by a permanent portion of the building shall not be concealed until inspected and approved. When the installation of equipment is complete, an additional and final inspection shall be made. Equipment regulated by this code shall not be connected to the water, fuel or power supply, or sewer system until authorized by the Building Official. The requirements of this section shall not be considered to prohibit the operation of equipment installed to replace existing equipment serving an occupied portion of the building in the event a request for inspection of such equipment has been filed with the Building Official not more than forty eight (48) hours after the replacement work is completed, and before any portion of such equipment is concealed by permanent portions of the building.

F. Additional Required Inspections and Tests:

1. A preconstruction meeting with the City and the project personnel will be required prior to beginning any new building or when required by the City.
2. For all new construction and when required by the City, a licensed surveyor must certify that the location of the footing forms is per the approved plans before foundations can be poured. The surveyor must provide a plot plan showing precise dimensions to the property lines and the elevation of the forms as compared with the reference elevation shown on the approved plans.
3. For all new construction and when required by the City, a licensed surveyor must certify that the height of the building is in accordance with the approved plans. The surveyor must show the precise height of the building as compared with the reference elevation shown on the approved plans.
4. An approved weatherproofing consultant must certify the installation of weatherproofing on all retaining walls which are adjacent to interior areas of the building. The consultant will not be required if the installer is certified in writing by the manufacturer.
5. For all new construction and when required by the City, an approved weatherproofing consultant must certify that the weatherproofing elements of the building have been installed in accordance with the approved plans, all relevant codes, and per manufacturer's specifications. At a minimum, an inspection and report will be required before plastering begins and before final approval is granted.
6. Prior to final approval, a certified air balancer must provide a written report showing the air volumes for all elements of a commercial garage exhaust system or a commercial kitchen hood system.
7. Prior to final approval, the City must witness a test of all fire smoke dampers.
8. Prior to rough framing inspection approval, and prior to final inspection approval, the City may verify conformity with applicable entitlements and zoning regulations.

G. Structural Observation: Structural observation shall be provided in Seismic Design Category D, E, or F as indicated in the California Building Code.

H. Inspection Record: Work requiring a permit shall not be commenced until the permit holder or the agent of the permit holder shall have posted in a conspicuous place at the construction site a permit and inspection record such as to allow the Building Official conveniently to make the required entries regarding inspection of the work. The permit shall be posted in a location such that it is visible from the street. The permit, construction documents, and plans shall remain readily available on site until final approval has been granted by the Building Official. The requirements for posting and location of posting may be waived or modified by the Building Official as deemed necessary for the particular type of work.

Duplicate inspection cards may be issued upon payment of applicable fees as established by City Council resolution.

I. Inspection Requests: It shall be the duty of the person doing the work authorized by a permit to notify the Building Official that such work is ready for inspection. Failure to do so constitutes a violation of this administrative code. The Building Official may require that every request for inspection be filed at least one business day before such inspection is desired. Such requests shall be made in a manner deemed acceptable by the Building Official. It shall be the duty of the person requesting any inspections required by this code to provide access to and means for inspection of the work.

Failure of a permit holder to schedule and undergo all required progress, final or other inspections is a violation of this administrative code.

J. Approval Required: Work shall not be done beyond the point indicated in each successive inspection without first obtaining the approval of the Building Official. The Building Official, upon notification, shall make the requested inspection and shall either indicate that that portion of the construction is satisfactory as completed (which is referred to as a "successful inspection") or shall notify the permit holder or an agent of the permit holder wherein the same fails to comply with this code. Any portion of work that does not comply with the code shall be corrected and such portion shall not be covered or concealed until authorized by the Building Official.

All work and installations that are authorized by a permit shall not become lawful until a permit holder has obtained a final inspection approval, which shall be in writing. There shall be a final inspection and approval of all buildings and structures when completed and ready for occupancy and use.

K. Reinspections: A reinspection fee may be assessed for each inspection or reinspection when such portion of work for which inspection is called is not complete or when corrections called for are not made. This section is not to be interpreted as requiring reinspection fees the first time a job is rejected for failure to comply with the requirements of this code but as controlling the practice of calling for inspections before the job is ready for such inspection or reinspection.

Reinspection fees may be assessed when the inspection record card is not posted or

otherwise available on the work site, the approved plans are not readily available to the inspector, for failure to provide access on the date for which inspection is requested, or for deviating from plans requiring the approval of the Building Official. To obtain a reinspection, the applicant shall file an application therefor in writing upon a form furnished for that purpose, and pay the reinspection fee in accordance with the Burbank Fee Resolution. In instances where reinspection fees have been assessed, additional inspection of the work will not be performed until the required fees have been paid.

9-1-1-111: CERTIFICATE OF OCCUPANCY.
In addition to the requirements contained in Section 111 of Part 2 of the California Building Standards Code, the following provisions shall apply to work completed pursuant to this Chapter.

A. In lieu of a Certificate of Occupancy, when the building shell, including all structural elements, is completed and all life safety systems are installed and functional, the Building Official may issue a certificate of completion to allow a limited use but not occupancy of the building prior to issuance of the Certificate of Occupancy. A certificate of completion is issued to signify completion of a building exclusive of interior build out by a tenant or an owner.

B. Change in Use: Changes in the character or use of a building shall not be made except as specified in the building code and the residential code.

C. Temporary Occupancy.

1. Temporary Certificate: If the Building Official finds that no substantial hazard will result from occupancy of any building or portion thereof before the same is completed, they may issue a Temporary Certificate of Occupancy for the use of a portion or portions of a building or structure prior to the completion of the entire building or structure; provided a cash deposit is made. The building official shall have the authority to authorize the temporary connection of the building or system service equipment to the utility source of energy for the purpose of testing building service equipment, or for use under a Temporary Certificate of Occupancy

2. Fees and Bond**:**
   a. A bond in the amount of two percent of the valuation of the building permit shall be provided by the applicant before issuance of a temporary certificate of occupancy. The bond shall assure the completion of the project. The bond shall be released to the applicant upon issuance of the certificate of occupancy in accordance with Section 111 of the California Building Code. If the Building Official determines that less than two percent of the work is necessary for completion, the Building Official may reduce the amount of the bond proportional to the incomplete work.

b. The City shall collect a fee for each temporary certificate of occupancy and temporary utilities release. Fees shall be assessed in accordance with the provisions of this section and as set forth in the Burbank Fee Resolution.

3. Application for Temporary Certificate of Occupancy**:**
After the Building Official inspects the building or structure and finds no violations of the provisions of this code or other laws that are enforced by the Building Division, the Building Official may issue a temporary certificate of occupancy.
The application shall contain the following:
a. The building permit number.
b. The address of the structure.
c. The name and address of the owner.
d. A description of that portion of the structure for which the temporary certificate is issued.
e. A statement that all work shall conform to the provisions of the Building, Electrical, Mechanical, Plumbing, and Fire Codes, as amended, and the applicable provisions of the Burbank Municipal Code.
f. A statement that all work shall be completed within the time limitations granted by the temporary certificate of occupancy.
g. The Building Official may require the applicant of a temporary certificate of occupancy to also apply for a temporary utilities release.

4. Time Limitation of Temporary Certificate of Occupancy**:**
Such temporary certificate of occupancy and temporary utilities release shall be valid for a period not to exceed 180 days. Additional temporary certificates of occupancy may be issued, if the application is approved by the Building Official. Upon expiration of a temporary certificate of occupancy, the building or structure shall require a certificate of occupancy in accordance with other provisions in this code. A violation of a condition shall constitute cause to revoke or suspend the temporary certificate

D. Temporary Connection: The building official shall have the authority to authorize the temporary connection of the building or system service equipment to the utility source of energy for the purpose of testing building service equipment, or for use under a Temporary Certificate of Occupancy, provided a cash performance deposit is made in accordance with subsection C, above.

Applications for temporary connection to the utility service shall be submitted with the payment of fees as established by Council resolution.

9-1-1-113: BOARD OF APPEALS:
In addition to the requirements in Section 113 of Part 2 of the California Building Standards Code, the following provisions shall apply.

A. BOARD MEMBER QUALIFICATIONS. Section 113.3 of Chapter 1, Part 2 of the California Building Standards Code is amended and restated as follows:

"**113.3 Qualifications.** The board of appeals shall be the same as the City of Burbank Board of Building and Fire Code Appeals. The establishment and composition of the board and qualifications of board members are specified in Section 2-1-414 of the Burbank Municipal Code."

B. NOTICE OF APPEAL.
Unless otherwise specified in this Code, prior to any appeal heard by the Board, a notice of appeal shall be filed with the Building Official stating the grounds for appeal set forth in the California Building Code Section 113.2. The Building Official shall fix a time and place for hearing such appeal within 60 days from the date notice of appeal was filed and shall give not less than five days' notice therefor to appellant and to each member of the Board. No notice of appeal shall be accepted unless the appellant first pays to the Building Official the fee as designated in the Burbank Fee Resolution for filing such appeal. The decision of the Board shall be final and conclusive. Within seven days of the Board's determination, exclusive of Saturdays, Sundays, and holidays, the Building Official shall give notice of the decision to the appellant.

9-1-1-114 VIOLATIONS
In addition to the provisions stated in Section 114 of Part 2 of the California Building Standards Code, the following provisions shall apply to violations of this Chapter.

A. General: The Building Official may record a notice with the Los Angeles County recorder's office that a property, building, structure, land, or any portion thereof, is in violation of any provision of this code, provided that the provisions of this section are complied with. The remedy provided herein is cumulative to any other enforcement actions permitted by the California Building Code or the Burbank Municipal Code.

B. Recordation: If: a) the Building Official determines that any property, building, structure, land, or any portion thereof is in violation of any provision of this code; and if b) the Building Official gives written notice of said violation(s) to the owner of the subject property (as identified on the last equalized assessment roll of the Los Angeles County assessor's office) as specified below; then the Building Official shall have the discretion to record with the Los Angeles County recorder's office a notice of violation(s) concerning the subject property.

C. Notice: The written notice given pursuant to this section shall indicate:

1. The nature of the violation(s); and
2. That if corrective or other required actions to abate the violation(s) are not started and/or completed in accordance with stated deadlines, as established by the Building Official in said notice, the Building Official may, at any time after a missed deadline, record a notice of violation with the Los Angeles County recorder's office against the subject property. The notice shall be posted on the property and shall be mailed to the owner of the property as indicated on the last equalized Los

Angeles County assessment roll. The mailed notice may be by registered, certified, or first-class mail.

A notice of violation(s) may be combined with other notices that the Building Official issues in the administration and/or enforcement of this Code.

D. Rescission: Any owner who desires to have a notice of violation rescinded must first fully abate all violations with all required permits and inspection approvals, as required by the code. Upon determining full compliance with the code has occurred, the Building Official shall, within twenty (20) days of such a determination, file a rescission of notice of violation for recording with the Los Angeles County recorder's office.

Following the recordation of a notice of violation the Building Official is not required to make any inspection or review of the premises to determine the continued existence of the noticed violation(s). It is the responsibility of the property owner, to obtain all permits and request inspections, undertake and complete all corrective or other required actions to abate the violation(s) so that a notice of violation may be rescinded.

E. Violation Penalties: Any person who violates a provision of this Building Code or fails to comply with any of the requirements thereof or who erects, constructs, alters, or repairs a building or structure in violation of the approved construction documents or directive by the Building Official, or of a permit or certificate issued under the provisions of this Building Code, shall be subject to penalties or other remedies set forth in this code.

F. Costs: Any person that violates any provision of this code shall be responsible for the costs of any and all code enforcement actions taken by the Building Official in response to such violations. These costs shall be based on the amounts specified by the Burbank Fee Schedule.

Any person violating the provisions of this Code shall reimburse the City for any and all costs, expenses and fees incurred by the City in responding to, investigating, assessing, monitoring, treating, cleaning, removing or remediating any violation of this code. Such costs, expenses and fees to be paid to the City shall include all administrative expenses and all legal expenses, including costs and attorney fees in obtaining compliance and in litigation, including all costs and attorney fees on any appeal.

9-1-1-116: UNSAFE BUILDINGS, STRUCTURES, EQUIPMENT, CONDITIONS

In addition to the provisions stated in Section 116 of Part 2 of the California Building Standards Code, the following provisions shall to unsafe buildings, structures, uses, and building appendages.

All buildings, structures, or building service equipment, or portions thereof, that are or hereafter become unsafe, insanitary, or deficient or which constitute a fire hazard, or are otherwise dangerous to human life, or which in relation to an existing use constitute a

hazard to safety or health, or public welfare, by reason of inadequate maintenance, dilapidation, obsolescence, fire hazard, disaster damage, or abandonment as specified in this code or any other applicable ordinance of the City, are, for the purpose of this code, unsafe buildings or structures. As used herein, "abandonment" exists when a building or structure is not lawfully occupied and contains conditions that violate the Burbank Municipal Code, and for which all required submittals and fees to repair, demolish or replace said building or structure have not been received by any division of the Community Development Department for a period of six (6) months.

Building service equipment regulated by the Code, which constitutes a fire, electrical or health hazard, or an unsanitary condition, or is otherwise dangerous to human life is, for the purpose of this section, unsafe. Use of buildings, structures or building service equipment constituting a hazard to safety, health or public welfare by reason of inadequate maintenance, dilapidation, obsolescence, fire hazard, disaster, damage or abandonment is, for the purpose of this section, an unsafe use.

Parapet walls, cornices, spires, towers, tanks, statuary and other appendages or structural members which are supported by, attached to, or a part of a building and which are in a deteriorated condition or otherwise unable to sustain the design loads which are specified in the Building Code are hereby designated as unsafe building appendages.

Unsafe building or structures shall be taken down and removed or made safe, as the Building Official deems necessary and as provided for in this Code. A vacant structure that is not secured against entry shall be deemed unsafe. No person shall own, use, occupy or maintain any unsafe building. All unsafe buildings are hereby declared to be public nuisances. In addition to instituting any appropriate action to prevent, restrain, correct, or abate a violation of this section, the Building Official may abate an unsafe condition by repair, rehabilitation, demolition or removal in accordance with the procedure specified in any articles of this chapter.

9-1-1-117: BUILDING SECURITY:
The following sections are added to Chapter 1, Part 2 of the CBC to read as follows:

“117. Building Security. Residential occupancies as referred to in Chapter 3 of the California Building Code shall comply with the security requirements in this section.”

A: GENERAL REQUIREMENTS:
Doors, windows or hatchways for dwelling units, room units or housekeeping units, openings between attached garages and dwelling units, and openings in enclosed attached garages, other than vehicular access, shall be provided with devices designed to provide security for the occupants and property within.

B: DOORS:
Doors providing access to a dwelling unit, rooming unit or housekeeping unit shall be equipped with a deadbolt lock designed to be readily openable from the side from which egress is to be made without the need for keys, special knowledge or effort and shall

have a lock throw of not less than 1 inch. Such deadbolt locks shall be installed according to the manufacturer's specifications and maintained in good working order. For the purpose of this section, a sliding bolt shall not be considered an acceptable deadbolt lock.

C: WINDOWS:

1. Operable windows located in whole or in part within 6 feet above ground level or a walking surface below that provide access to a dwelling unit, rooming unit or housekeeping unit shall be equipped with a window sash locking device.
2. Bars, grilles, grates or similar devices shall not be installed on any emergency or escape windows.

D: BASEMENT HATCHWAYS:
Basement hatchways that provide access to a dwelling unit, rooming unit or housekeeping unit shall be equipped with devices that secure the units from unauthorized entry."

DIVISION 2. CALIFORNIA ADMINISTRATIVE CODE

9-1-1-2: ADOPTION OF THE 2025 CALIFORNIA ADMINISTRATIVE CODE:
Part 1 of Title 24 of the California Code of Regulations also known as the "California Administrative Code," which is part of the California Building Standards Code, 2025 Edition, as adopted by the California Building Standards Commission, is hereby adopted by the City of Burbank and made a part of this Code without any local amendments thereto.

ARTICLE 2. CALIFORNIA BUILDING CODE

9-1-2: ADOPTION OF 2025 THE CALIFORNIA BUILDING CODE:
Part 2 of Title 24 of the California Code of Regulations, also known as the "California Building Code," which is part of the California Building Standards Code, 2025 Edition, together with Appendices C, G, I, J, and Q as adopted by the California Building Standards Commission is hereby adopted by the City of Burbank and made a part of this Code, with certain amendments, additions, and deletions as stated in this Article.

9-1-2-101.1: TITLE:
Section 101.1 of Chapter 1, Part 2 of the CBC is amended to read as follows:

> "**101.1 Title.** These regulations shall be known as the Building Code of the City of Burbank, hereinafter referred to as "this code."

9-1-2-705.3.1: BUILDINGS ON CONTIGUOUS LOTS:
The following section is added to Chapter 7, Part 2 of the CBC to read as follows:

"**705.3.1 Buildings on contiguous lots – lots under the same ownership or occupancy.** In all cases involving contiguous lots owned or occupied by the same person, such lots, or portions of lots, may be considered as one lot for the purpose of enforcing Sections 705 and 715 of the Building Code, provided the owner and the tenant or lessee, if any, executes and records an agreement with the City to the satisfaction of the Building Official on a form approved by the City Attorney, assuring compliance with such provisions in the event the common ownership or occupancy of the lots is terminated. The Building Official is hereby authorized to execute such agreements on behalf of the City. An easement for right-of-way purposes shall constitute ownership or occupancy under this section."

9-1-2-1206.4.1: ALTERNATE SOUND TRANSMISSION CONTROL ASSEMBLIES FOR NEW SINGLE-FAMILY DWELLINGS:

Section 1206.4 of Chapter 12, Part 2 of the California Building Code shall be amended to include the following subsections:

A. LDN CONTOUR 60-65.
   1. Roof assemblies shall be constructed with fiberglass batt insulation with a minimum R-value of 38.
   2. Wall assemblies shall be constructed with fiberglass batt insulation with a minimum R-value of 15.
   3. For exterior walls parallel to the noise source, or at some angle less than perpendicular to the noise source, all windows shall have a minimum STC rating of 40. All sliding glass doors and French doors shall have a minimum STC rating of 35. All windows shall be weather-stripped in accordance with the California Energy Efficiency Standards for Low-Rise Residential Buildings.

EXCEPTION: Stained glass panels.

4. All exterior doors shall be 1-3/4" solid-core, wood-slab doors, or 18-gage insulated steel-slab doors, with compression seals all around, including the threshold. All door glazing shall be 3/4" double-pane insulating units with double-strength 1/8" glass.

EXCEPTIONS:

a. Sliding glass and French doors. (See number 3 above)
b. Stained glass panels.

5. An acoustic acrylic mastic sealant (non-drying and non-hardening) shall be used to seal and caulk all penetrations in accordance with the California Energy Efficiency Standards for Low-Rise Residential Buildings.
6. A secondary weather-resistive barrier, or housewrap, shall be installed.

B. LDN CONTOURS 65-70 dB and 70-75 dB.

1. Structures in LDN contours 65-70 dB and 70-75 dB shall conform to the requirements for LDN contour 60-65 dB.
2. All windows shall have a minimum STC rating of 40. All sliding glass doors and French doors shall have a minimum STC rating of 35. All windows shall be weather-stripped in accordance with the Energy Efficiency Standards for Low-Rise Residential Buildings.

EXCEPTION: Stained glass panels.

All exterior walls parallel to the noise source, or at some angle less than perpendicular to the noise source, shall be constructed, on the interior surface, with resilient channels 24" o.c. attached at right angles to the wood studs, with one layer of gypsum wallboard applied parallel to the channels. End joints of the wallboard shall be back-blocked with resilient channels.

C. LDN CONTOUR 75-80 dB.

Dwellings located in a LDN contour of 75-80 dB or above shall meet the acoustical analysis requirements of Section 1206 of the California Building Code."

9-1-2-1403.3.3: WOOD SHAKES AND SHINGLES PROHIBITED:

The following section is added to Chapter 14, Part 2 of the CBC to read as follows:

"**1403.3.3 Shakes and shingles.** No wood shakes or wood shingles shall be installed as an exterior wall covering on any new or existing building or structure. No wood board, hardboard, or engineered wood siding, pressure-treated wood, intumescent paints, and other protective coatings shall be installed as an exterior wall covering on any new or existing building or structure in the Burbank Fire Hazard Severity Zones.

EXCEPTIONS: The following types of siding may be used:

1. Fiber-Cement siding with a Class A fire rating.

2. Vinyl siding with a Class A fire rating. Such vinyl siding shall be installed over one layer of Type X gypsum board with a minimum thickness of 1/2".
3. Alternate siding materials may be approved by the Building Official and Fire Chief in accordance with Section 104.11 of the California Building Code."

9-1-2-1403.3.4: EXISTING WOOD EXTERIOR REPAIRS:
The following section is added to Chapter 14, Part 2 of the CBC to read as follows:

"**1403.3.4 Existing wood exterior repairs.**
Burbank Municipal Code Section 9-1-2R-R703.6.1 shall not apply:

1. When an existing building or structure with a wood exterior wall covering is subject to wood shake or wood shingle installation, addition, repair, alteration or replacement of less than 25 percent of the existing building or structure's wood exterior wall covering area over the life of the building commencing on or after the effective date of this ordinance, as long as that existing building or structure with a wood exterior wall covering is located outside of the Burbank Fire Hazard Severity Zones. No wood exterior repairs or installations shall be allowed in the Burbank Fire Hazard Severity Zones.

2. When an existing building or structure with a wood exterior wall covering is subject to wood shake or wood shingle installation, addition, repair, alteration or replacement of 25 percent or more of the existing building or structure's wood exterior wall covering area over the life of the building commencing on or after the effective date of this ordinance, as long as that existing building or structure with a wood exterior wall covering is located outside of the Burbank Fire Hazard Severity Zones. In such circumstances, if the building or structure is located in a commercial or industrial zone, pressure-treated wood shakes or pressure-treated wood shingles with a Class B rating shall be used with a one-hour wall and in all other areas of the City, pressure-treated wood shakes or pressure- treated wood shingles with a Class C rating shall be used with a one-hour wall. For the purposes of this ordinance, 25 percent of the area of wood exterior wall covering shall be calculated from the area of the wood exterior wall covering existing on the effective date of this ordinance. No wood exterior repairs or installations shall be allowed in the Burbank Fire Hazard Severity Zones."

9-1-2-1404.2: WEATHER PROTECTION:
Section 1404.2 of Chapter 14, Part 2 of the CBC is amended to include the following subsection:

"Exception: No wood shakes or wood shingles shall be installed as an exterior wall covering on any new or existing building or structure in the Burbank Fire Hazard Severity Zones."

9-1-2-1405.1.1: COMBUSTIBLE WALL COVERINGS:

Section 1405.1.1 of Chapter 14, Part 2 of the CBC is amended to include the following subsection:

> "5. No wood shakes or wood shingles shall be installed as an exterior wall covering on any new or existing building or structure. No wood board, hardboard, or engineered wood siding, pressure-treated wood, intumescent paints, and other protective coatings shall be installed as an exterior wall covering on any new or existing building or structure in the Burbank Fire Hazard Severity Zones."

9-1-2-1501.1.1: WOOD ROOFS PROHIBITED:
The following section is added to Chapter 15, Part 2 of the CBC to read as follows:

> **"1501.1.1 Wood roofs prohibited.**
> 1. **All wood shake or shingle roofs located outside of the Burbank Fire Hazard Severity Zones.** Notwithstanding any other requirement of the Burbank Municipal Code and the California Building Code, no wood shake or shingle roofs shall be permitted to remain on any building or structure after August 14, 2014.
> 2. **All wood shake or shingle roofs located inside the Burbank Fire Hazard Severity Zones.** Notwithstanding any other requirement of the Burbank Municipal Code and the California Building Code, no wood shake or shingle roofs shall be permitted to remain on any building or structure after August 14, 2005."

9-1-2-1507.8: WOOD SHINGLES:
Section 1507.8 of Chapter 15, Part 2 of the CBC is amended and restated as follows:

> "**1507.8 Wood shingles.** No wood roof covering shall be installed on any new or existing building or structure."

9-1-2-1507.9: WOOD SHAKES:
Section 1507.9 of Chapter 15, Part 2 of the CBC is amended and restated as follows:

> "**1507.9 Wood shakes.** No wood roof covering shall be installed on any new or existing building or structure."

9-1-2-1512.3: ROOF RECOVER:
Subsection 3 of Section 1512.3 of Chapter 15, Part 2 of the CBC is not adopted.

Section 1512.3, Exception 2 of Chapter 15, Part 2 of the CBC is amended and restated as follows:

> "2. The existing roof covering is slate, clay, cement, asbestos-cement tile, wood shake or wood shingle."

9-1-2-1512.3.1: ROOF RECOVERING OVER WOOD SHINGLES OR SHAKES:
Section 1512.3.1 of Chapter 15, Part 2 of the CBC is amended and restated as follows:

"**1512.3.1 Roof recovering over wood shingles or shakes.** No roof covering shall be applied over existing wood shakes or wood shingles. When a roof has two or more layers of roof covering, any of which is wood shake or wood shingle, all layers shall be completely removed before applying a new roof covering. Existing roof recovering over wood shakes or wood shingles shall be removed and replaced no later than August 14, 2020."

9-1-2-1612.3: ESTABLISHMENT OF FLOOD HAZARD AREAS:
Section 1612.3 of Chapter 16, Part 2 of the CBC is amended as follows:

A. Insert: "City of Burbank" into "[Insert Name of Local Jurisdiction]" field in Section 1612.3 of the California Building Code.
B. Insert: "January 20, 1999" into "[Insert Date of Issuance]" field in Section 1612.3 of the California Building Code.

9-1-2-1613.8: AMENDMENTS TO ASCE 7:

The following section is added to Chapter 16, Part 2 of the CBC to read as follows:

"**1613.8 Amendments to ASCE 7.** The text of ASCE 7 shall be modified as indicated in Sections 1613.8 through 1613.8.1.

1613.8.1 Values for Vertical Combinations. ASCE 7, Section 12.2.3.1. The text of ASCE 7 Section 12.2.3.1 Exception 3 is modified as follows:

3. Detached one- and two-family dwellings up to two stories in height of light frame construction.

1613.8.2 Wood diaphragms. ASCE 7, Section 12.11.2.2.3. The text of ASCE 7 Section 12.11.2.2.3 is modified as follows:

12.11.2.2.3 Wood diaphragms. The anchorage of concrete or masonry structural walls to wood diaphragms shall be in accordance with AWC SDPWS 4.1.5.1 and this section. Continuous ties required by this section shall be in addition to the diaphragm sheathing. Anchorage shall not be accomplished by use of toenails or nails subject to withdrawal, nor shall wood ledgers or framing be used in cross-grain bending or cross-grain tension. The diaphragm sheathing shall not be considered effective for providing the ties or struts required by this section

For structures assigned to Seismic Design Category D, E or F, wood diaphragms supporting concrete or masonry walls shall comply with the following:

1. The spacing of continuous ties shall not exceed 40 feet. Added chords of diaphragms may be used to form subdiaphragms to transmit the anchorage forces to the main continuous crossties.
2. The maximum diaphragm shear used to determine the depth of the subdiaphragm shall not exceed 75% of the maximum diaphragm shear.

1613.8.3 Design Earthquake Displacement. ASCE 7, Section 12.8.6.3. The text of ASCE 7 Section 12.8.6.3, Equation 12.8-16 is modified as follows:

$$\delta_{DE} = C_d\delta_e + \delta_{di} \qquad (12.8\text{-}16)$$

9-1-2-1613.9: SEISMIC DESIGN PROVISIONS FOR HILLSIDE BUILDINGS:
The following section is added to Chapter 16, Part 2 of the CBC to read as follows:

"**1613.9 Seismic design provisions for hillside buildings.**

1613.9.1 Purpose. The purpose of this section is to establish minimum regulations for the design and construction of new buildings and additions to existing buildings when constructing such buildings on or into slopes steeper than one unit vertical in three units horizontal (33.3%). These regulations establish minimum standards for seismic force resistance to reduce the risk of injury or loss of life in the event of earthquakes.

1613.9.2 Scope. The provisions of this section shall apply to the design of the lateral-force-resisting system for hillside buildings at and below the base level diaphragm. The design of the lateral-force-resisting system above the base level diaphragm shall be in accordance with the provisions for seismic and wind design as required elsewhere in this division.

Exception: Non-habitable accessory buildings and decks not supporting or supported from the main building are exempt from these regulations.

1613.9.3 Definitions. For the purposes of this section certain terms are defined as follows:
BASE LEVEL DIAPHRAGM is the floor at, or closest to, the top of the highest level of the foundation.
DIAPHRAGM ANCHORS are assemblies that connect a diaphragm to the adjacent foundation at the uphill diaphragm edge.
DOWNHILL DIRECTION is the descending direction of the slope approximately perpendicular to the slope contours.
FOUNDATION is concrete or masonry which supports a building, including footings, stem walls, retaining walls, and grade beams.

FOUNDATION EXTENDING IN THE DOWNHILL DIRECTION is a foundation running downhill and approximately perpendicular to the uphill foundation.
HILLSIDE BUILDING is any building or portion thereof constructed on or into a slope steeper than one unit vertical in three units horizontal (33.3%). If only a portion of the building is supported on or into the slope, these regulations apply to the entire building.
PRIMARY ANCHORS are diaphragm anchors designed for and providing a direct connection as described in Sections 1613.9.5 and 1613.9.7.3 between the diaphragm and the uphill foundation.
SECONDARY ANCHORS are diaphragm anchors designed for and providing a redundant diaphragm to foundation connection, as described in Sections 1613.9.6 and 1613.9.7.4.
UPHILL DIAPHRAGM EDGE is the edge of the diaphragm adjacent and closest to the highest ground level at the perimeter of the diaphragm.
UPHILL FOUNDATION is the foundation parallel and closest to the uphill diaphragm edge.

1613.9.4 Analysis and Design.

1613.9.4.1 General. Every hillside building within the scope of this section shall be analyzed, designed, and constructed in accordance with the provisions of this division. When the code-prescribed wind design produces greater effects, the wind design shall govern, but detailing requirements and limitations prescribed in this and referenced sections shall be followed.

1613.9.4.2 Base level diaphragm-downhill direction. The following provisions shall apply to the seismic analysis and design of the connections for the base level diaphragm in the downhill direction.

1613.9.4.2.1 Base for lateral force design defined. For seismic forces acting in the downhill direction, the base of the building shall be the floor at or closest to the top of the highest level of the foundation.

1613.9.4.2.2 Base shear. In developing the base shear for seismic design, the response modification coefficient (R) shall not exceed 5 for bearing wall and building frame systems. The total base shear shall include the forces tributary to the base level diaphragm including forces from the base level diaphragm.

1613.9.5 Base shear resistance-primary anchors.

1613.9.5.1 General. The base shear in the downhill direction shall be resisted through primary anchors from diaphragm struts provided in the base level diaphragm to the foundation.

1613.9.5.2 Location of primary anchors. A primary anchor and diaphragm strut shall be provided in line with each foundation extending in the downhill direction. Primary anchors and diaphragm struts shall also be provided where interior vertical lateral-force-resisting elements occur above and in contact with the base level diaphragm. The spacing of primary anchors and diaphragm struts or collectors shall in no case exceed 30 feet (9144 mm).

1613.9.5.3 Design of primary anchors and diaphragm struts. Primary anchors and diaphragm struts shall be designed in accordance with the requirements of Section 1613.9.8.

1613.9.5.4 Limitations. The following lateral-force-resisting elements shall not be designed to resist seismic forces below the base level diaphragm in the downhill direction:

1. Wood structural panel wall sheathing,
2. Cement plaster and lath,
3. Gypsum wallboard, and
4. Tension only braced frames.

Braced frames designed in accordance with the requirements of Section 2202.2.1.2 may be used to transfer forces from the primary anchors and diaphragm struts to the foundation provided lateral forces do not induce flexural stresses in any member of the frame or in the diaphragm struts. Deflections of frames shall account for the variation in slope of diagonal members when the frame is not rectangular.

1613.9.6 Base Shear Resistance - Secondary Anchors.

1613.9.6.1 General. In addition to the primary anchors required by Section 1613.9.5, the base shear in the downhill direction shall be resisted through secondary anchors in the uphill foundation connected to diaphragm struts in the base level diaphragm.

> **Exception:** Secondary anchors are not required where foundations extending in the downhill direction spaced at not more than 30 feet (9144 mm) on center extend up to and are directly connected to the base level diaphragm for at least 70% of the diaphragm depth.

1613.9.6.2 Secondary Anchor Capacity and Spacing. Secondary anchors at the base level diaphragm shall be designed for a

minimum force equal to the base shear, including forces tributary to the base level diaphragm, but not less than 600 pounds per lineal foot (8.76 kN/m) based on Allowable Stress Design (ASD) levels. The secondary anchors shall be uniformly distributed along the uphill diaphragm edge and shall be spaced a maximum of 4 feet (1219 mm) on center.

1613.9.6.3 Design. Secondary anchors and diaphragm struts shall be designed in accordance with Section 1613.9.8.

1613.9.7 Diaphragms Below the Base Level - Downhill Direction. The following provisions shall apply to the lateral analysis and design of the connections for all diaphragms below the base level diaphragm in the downhill direction.

1613.9.7.1 Diaphragm Defined. Every floor level below the base level diaphragm shall be designed as a diaphragm.

1613.9.7.2 Design Force. Each diaphragm below the base level diaphragm shall be designed for all tributary loads at that level using a minimum seismic force factor not less than the base shear coefficient.

1613.9.7.3 Design Force Resistance - Primary Anchors. The design force described in Section 1613.9.7.2 shall be resisted through primary anchors from diaphragm struts provided in each diaphragm to the foundation. Primary anchors shall be provided and designed in accordance with the requirements and limitations of Section 1613.9.5.

1613.9.7.4 Design Force Resistance - Secondary Anchors.

1613.9.7.4.1 General. In addition to the primary anchors required in Section 1613.9.7.3, the design force in the downhill direction shall be resisted through secondary anchors in the uphill foundation connected to diaphragm struts in each diaphragm below the base level.

Exception: Secondary anchors are not required where foundations extending in the downhill direction, spaced at not more than 30 feet (9144 mm) on center, extend up to and are directly connected to each diaphragm below the base level for at least 70% of the diaphragm depth.

1613.9.7.4.2: Secondary Anchor Capacity. Secondary anchors at each diaphragm below the base level diaphragm shall be designed for a minimum force equal to the design force but not less than 300 pounds per lineal foot (4.38 kN/m) based on Allowable Stress Design (ASD) levels. The secondary anchors shall be uniformly distributed along the uphill diaphragm edge and shall be spaced a maximum of 4 feet (1219 mm) on center.

1613.9.7.4.3: Design. Secondary anchors and diaphragm struts shall be designed in accordance with Section 1613.9.8.

1613.9.8 Primary and Secondary Anchorage and Diaphragm Strut Design. Primary and secondary anchors and diaphragm struts shall be designed in accordance with the following provisions:

1. Fasteners. All bolted fasteners used to develop connections to wood members shall be provided with square plate washers at all bolt heads and nuts. Washers shall be minimum 0.229 inch by 3 inches by 3 inches (5.82 mm by 76 mm by 76 mm) in size. Nuts shall be tightened to finger tight plus one half (1/2) wrench turn prior to covering the framing.
2. Fastening. The diaphragm to foundation anchorage shall not be accomplished by the use of toenailing, nails subject to withdrawal, or wood in cross-grain bending or cross-grain tension.
3. Size of Wood Members. Wood diaphragm struts collectors, and other wood members connected to primary anchors shall not be less than 3 inch (76 mm) nominal width. The effects of eccentricity on wood members shall be evaluated as required per Item 9.
4. Design. Primary and secondary anchorage, including diaphragm struts, splices, and collectors shall be designed for 125% of the tributary force.
5. Allowable Stress Increase. The one-third allowable stress increase permitted under Section 1605.2 shall not be taken when the working (allowable) stress design method is used.
6. Steel Element of Structural Wall Anchorage System. The strength design forces for steel elements of the structural wall anchorage system, with the exception of anchor bolts and reinforcing steel, shall be increased by 1.4 times the forces otherwise required.
7. Primary Anchors. The load path for primary anchors and diaphragm struts shall be fully developed into the diaphragm and into the foundation. The foundation must be shown to be adequate to resist the concentrated loads from the primary anchors.
8. Secondary Anchors. The load path for secondary anchors and diaphragm struts shall be fully developed in the diaphragm but need not be developed beyond the connection to the foundation.
9. Symmetry. All lateral force foundation anchorage and diaphragm strut connections shall be symmetrical. Eccentric connections may be

permitted when demonstrated by calculation or tests that all components of force have been provided for in the structural analysis or tests.

10. Wood Ledgers. Wood ledgers shall not be used to resist cross-grain bending or cross-grain tension.

1613.9.9 Lateral-force-resisting elements normal to the downhill direction.

1613.9.9.1 General. In the direction normal to the downhill direction, lateral-force-resisting elements shall be designed in accordance with the requirements of this section.

1613.9.9.2 Base Shear. In developing the base shear for seismic design, the response modification coefficient (R) shall not exceed 5 for bearing wall and building frame systems.

1613.9.9.3 Vertical Distribution of Seismic Forces. For seismic forces acting normal to the downhill direction the distribution of seismic forces over the height of the building using Section 12.8.3 of ASCE 7 shall be determined using the height measured from the top of the lowest level of the building foundation.

1613.9.9.4 Drift Limitations. The story drift below the base level diaphragm shall not exceed 0.007 times the story height at strength design force level. The total drift from the base level diaphragm to the top of the foundation shall not exceed 3/4 inch (19 mm). Where the story height or the height from the base level diaphragm to the top of the foundation varies because of a stepped footing or story offset, the height shall be measured from the average height of the top of the foundation. The story drift shall not be reduced by the effect of horizontal diaphragm stiffness.

1613.9.9.5 Distribution of Lateral Forces.

1613.9.9.5.1 General. The design lateral force shall be distributed to lateral-force-resisting elements of varying heights in accordance with the stiffness of each individual element.

1613.9.9.5.2 Wood Structural Panel Sheathed Walls. The stiffness of a stepped wood structural panel shear wall may be determined by dividing the wall into adjacent rectangular elements, subject to the same top of wall deflection. Deflections of shear walls may be estimated by AWC SDPWS Section 4.3.4. Sheathing and fastening requirements for the stiffest section shall be used for the entire wall. Each section of wall shall be anchored for shear and uplift at each step. The

minimum horizontal length of a step shall be 8 feet (2438 mm) and the maximum vertical height of a step shall be 2 feet 8 inches (813 mm).

1613.9.9.5.3 Reinforced Concrete or Masonry Shear Walls. Reinforced concrete or masonry shear walls shall have forces distributed in proportion to the rigidity of each section of the wall.

1613.9.9.6 Limitations. The following lateral force-resisting-elements shall not be designed to resist lateral forces below the base level diaphragm in the direction normal to the downhill direction:

1. Cement plaster and lath,
2. Gypsum wallboard, and
3. Tension-only braced frames.

Braced frames designed in accordance with the requirements of Section 2202.2.1.2 of this Code may be designed as lateral-force-resisting elements in the direction normal to the downhill direction, provided lateral forces do not induce flexural stresses in any member of the frame. Deflections of frames shall account for the variation in slope of diagonal members when the frame is not rectangular.

1613.9.10 Specific Design Provisions.

1613.9.10.1 Footings and Grade Beams. All footings and grade beams shall comply with the following:

1. Grade beams shall extend at least 12 inches (305 mm) below the lowest adjacent grade and provide a minimum 24 inch (610 mm) distance horizontally from the bottom outside face of the grade beam to the face of the descending slope.
2. Continuous footings shall be reinforced with at least two No. 4 reinforcing bars at the top and two No. 4 reinforcing bars at the bottom.
3. All main footing and grade beam reinforcement steel shall be bent into the intersecting footing and fully developed around each corner and intersection.
4. All concrete stem walls shall extend from the foundation and reinforced as required for concrete or masonry walls.

1613.9.10.2 Protection against decay and termites. All wood to earth separation shall comply with the following:

1. Where a footing or grade beam extends across a descending slope, the stem wall, grade beam, or footing shall extend up

to a minimum 18 inches (457 mm) above the highest adjacent grade.

Exception: At paved garage and doorway entrances to the building, the stem wall need only extend to the finished concrete slab, provided the wood framing is protected with a moisture proof barrier.

2. Wood ledgers supporting a vertical load of more than 100 pounds per lineal foot (1.46 kN/m) based on Allowable Stress Design (ASD) levels and located within 48 inches (1219 mm) of adjacent grade are prohibited. Galvanized steel ledgers and anchor bolts, with or without wood nailers, or treated or decay resistant sill plates supported on a concrete or masonry seat, may be used.

1613.9.10.3 Sill Plates. All sill plates and anchorage shall comply with the following:

1. All wood framed walls, including nonbearing walls, when resting on a footing, foundation, or grade beam stem wall, shall be supported on wood sill plates bearing on a level surface.
2. Power-driven fasteners shall not be used to anchor sill plates except at interior nonbearing walls not designed as shear walls.

1613.9.10.4 Column Base Plate Anchorage. The base of isolated wood posts (not framed into a stud wall) supporting a vertical load of 4,000 pounds (17.8 kN) based on Allowable Stress Design (ASD) levels or more and the base plate for a steel column shall comply with the following:

1. When the post or column is supported on a pedestal extending above the top of a footing or grade beam, the pedestal shall be designed and reinforced as required for concrete or masonry columns. The pedestal shall be reinforced with a minimum of four No. 4 bars extending to the bottom of the footing or grade beam. The top of exterior pedestals shall be sloped for positive drainage.
2. The base plate anchor bolts or the embedded portion of the post base, and the vertical reinforcing bars for the pedestal, shall be confined with two No. 4 or three No. 3 ties within the top 5 inches (127 mm) of the concrete or masonry pedestal. The base plate anchor bolts shall be embedded a minimum of 20 bolt diameters into the concrete or masonry pedestal. The

base plate anchor bolts and post bases shall be galvanized and each anchor bolt shall have at least 2 galvanized nuts above the base plate.

1613.9.10.5 Steel beam to column supports. All steel beam to column supports shall be positively braced in each direction. Steel beams shall have stiffener plates installed on each side of the beam web at the column. The stiffener plates shall be welded to each beam flange and the beam web. Each brace connection or structural member shall consist of at least two 5/8 inch (15.9 mm) diameter machine bolts."

9-1-2-1613.10: SUSPENDED CEILINGS:
The following section is added to Chapter 16, Part 2 of the CBC to read as follows:

"**1613.10 Suspended ceilings.** Minimum design and installation standards for suspended ceilings shall be determined in accordance with the requirements of Section 2506.2.1 of this Code and this section.

1613.10.1 Scope. This part contains special requirements for suspended ceilings and lighting systems. Provisions of Section 13.5.6 of ASCE 7 shall apply except as modified herein.

1613.10.2 General. The suspended ceilings and lighting systems shall be limited to 6 feet (1828 mm) below the structural deck unless the lateral bracing is designed by a licensed engineer or architect.

1613.10.3 Sprinkler heads. All sprinkler heads (drops) except fire-resistance-rated floor/ceiling or roof/ceiling assemblies, shall be designed to allow for free movement of the sprinkler pipes with oversize rings, sleeves or adaptors through the ceiling tile. Sprinkler heads and other penetrations shall have a 2 inch (50mm) oversize ring, sleeve, or adapter through the ceiling tile to allow for free movement of at least 1 inch (25mm) in all horizontal directions. Alternatively, a swing joint that can accommodate 1 inch (25 mm) of ceiling movement in all horizontal directions is permitted to be provided at the top of the sprinkler head extension.
Sprinkler heads penetrating fire-resistance-rated floor/ceiling or roof/ceiling assemblies shall comply with Section 714 of this Code.

1613.10.4 Special Requirements for Means of Egress. Suspended ceiling assemblies located along means of egress serving an occupant load of 30 or more shall comply with the following provisions.

1613.10.4.1 General. Ceiling suspension systems shall be connected and braced with vertical hangers attached directly to the structural deck along the means of egress serving an occupant load

of 30 or more and at lobbies accessory to Group A Occupancies. Spacing of vertical hangers shall not exceed 2 feet (610 mm) on center along the entire length of the suspended ceiling assembly located along the means of egress or at the lobby.

1613.10.4.2 Assembly device. All lay-in panels shall be secured to the suspension ceiling assembly with two hold-down clips minimum for each tile within a 4-foot (1219 mm) radius of the exit lights and exit signs.

1613.10.4.3 Emergency systems. Independent supports and braces shall be provided for light fixtures required for exit illumination. Power supply for exit illumination shall comply with the requirements of Section 1008.3 of this Code.

1613.10.4.4 Supports for appendage. Separate support from the structural deck shall be provided for all appendages such as light fixtures, air diffusers, exit signs, and similar elements."

9-1-2-1704.6: STRUCTURAL OBSERVATIONS:
Section 1704.6 of Chapter 17, Part 2 of the CBC is amended and restated as follows:

"**1704.6 Structural observations.** Where required by the provisions of Section 1704.6.1 the owner or the owner's authorized agent shall employ a structural observer to perform structural observations. The structural observer shall visually observe representative locations of structural systems, details and load paths for general conformance to the approved construction documents. Structural observation does not include or waive the responsibility for the inspections in CBC Section 110 or the special inspections in CBC Section 1705 or other sections of this code. The structural observer shall be one of the following individuals:

1. The registered design professional responsible for the structural design, or
2. A registered design professional designated by the registered design professional responsible for the structural design.

Prior to the commencement of observations, the structural observer shall submit to the building official a written statement identifying the frequency and extent of structural observations.

The owner or owner's authorized agent shall coordinate and call a preconstruction meeting between the structural observer, contractors, affected subcontractors and special inspectors. The structural observer shall preside over the meeting. The purpose of the meeting shall be to identify the major structural elements and connections that affect the vertical and lateral load resisting systems of the structure and to review scheduling of the required observations. A record of the meeting shall be included in the report submitted to the building official.

Observed deficiencies shall be reported in writing to the owner or owner's authorized agent, special inspector, contractor and the building official. Upon the form prescribed by the building official, the structural observer shall submit to the building official a written statement at each significant construction stage stating that the site visits have been made and identifying any reported deficiencies which, to the best of the structural observer's knowledge, have not been resolved. A final report by the structural observer which states that all observed deficiencies have been resolved is required before acceptance of the work by the building official."

9-1-2-1704.6.1: STRUCTURAL OBSERVATIONS FOR STRUCTURES: Section 1704.6.1 of Chapter 17, Part 2 of the CBC is amended and restated as follows:

"**1704.6.1 Structural observations for structures.** Structural observations shall be provided for those structures where one or more of the following conditions exist:

1. The structure is classified as Risk Category III or IV.
2. The structure is a high-rise building.
3. A lateral design is required for the structure or portion thereof.

   Exception: One-story wood framed Group R-3 and Group U Occupancies less than 2,000 square feet in area, provided the adjacent grade is not steeper than 1 unit vertical in 10 units horizontal (10% sloped), assigned to Seismic Design Category D."

4. Such observation is required by the registered design professional responsible for the structural design.
5. Such observation is specifically required by the building official.

9-1-2-1705.3: CONCRETE CONSTRUCTION:
Section 1705.3 of Chapter 17, Part 2 of the CBC is amended and restated as follows:

"**1705.3 Concrete construction.** The special inspections and tests for concrete construction shall be performed in accordance with this section and Table 1705.3.

Exceptions: Special inspections and tests shall not be required for:

1. Isolated spread concrete footings of buildings three stories or less above grade plane that are fully supported on earth or rock where the structural design of the footing is based on a specified compressive strength, f'c, not more than 2,500 pounds per square inch (psi) (17.2 Mpa) regardless of the compressive strength specified in the construction documents or used in the footing construction.

2. Continuous concrete footings supporting walls of buildings three stories or less above grade plane that are fully supported on earth or rock where:
   2.1. The footings support walls of light-frame construction;
   2.2. The footings are designed in accordance with Table 1809.7; or
   2.3. The structural design of the footing is based on a specified compressive strength, f'c, not more than 2,500 pounds per square inch (psi) (17.2 Mpa), regardless of the compressive strength specified in the construction documents or used in the footing construction.
3. Nonstructural concrete slabs supported directly on the ground, including prestressed slabs on grade, where the effective prestress in the concrete is less than 150 psi (1.03 Mpa).
4. Concrete patios, driveways and sidewalks, on grade."

9-1-2-1705.13: SPECIAL INSPECTIONS FOR SEISMIC RESISTANCE:
Section 1705.13 of Chapter 17, Part 2 of the CBC is amended and restated as follows:

"**1705.13 Special inspections for seismic resistance.** Special inspections for seismic resistance shall be required as specified in Sections 1705.13.1 through 1705.13.9, unless exempted by the exceptions of Section 1704.2.

Exception: The special inspections specified in Sections 1705.13.1 through 1705.13.9 are not required for structures designed and constructed in accordance with one of the following:

1. The structure consists of light-frame construction; the design spectral response acceleration at short periods, S_{DS}, as determined in Section 1613.2.4, does not exceed 0.5; and the building height of the structure does not exceed 35 feet (10 668 mm).
2. The seismic force-resisting system of the structure consists of reinforced masonry or reinforced concrete; the design spectral response acceleration at short periods, S_{DS}, as determined in Section 1613.2.4, does not exceed 0.5; and the building height of the structure does not exceed 25 feet (7620 mm)
3. The structure is a detached one- or two-family dwelling not exceeding two stories above grade plane, is not assigned to Seismic Design Category D, E or F, and does not have any of the following horizontal or vertical irregularities in accordance with Section 12.3 of ASCE 7:

   3.1 Torsional or extreme torsional irregularity.
   3.2 Nonparallel systems irregularity.
   3.3 Stiffness-soft story or stiffness-extreme soft story irregularity.
   3.4 Discontinuity in lateral strength-weak story irregularity."

9-1-2-1807.1.4: PERMANENT WOOD FOUNDATION SYSTEMS:
Section 1807.1.4 of Chapter 18, Part 2 of the CBC is amended and restated as follows:

> "**1807.1.4 Permanent wood foundation systems.** Permanent wood foundation systems shall be designed and installed in accordance with AWC PWF. Lumber and plywood shall be treated in accordance with AWPA U1 (Commodity Specification A, Special Requirement 4.2) and shall be identified in accordance with Section 2303.1.9.1. Permanent wood foundation systems shall not be used for structures assigned to Seismic Design Category D, E or F."

9-1-2-1807.1.6: PRESCRIPTIVE DESIGN OF CONCRETE AND MASONRY FOUNDATION WALLS:
Section 1807.1.6 of Chapter 18, Part 2 of the CBC is amended and restated as follows:

> "**1807.1.6 Prescriptive design of concrete and masonry foundation walls.** Concrete and masonry foundation walls that are laterally supported at the top and bottom shall be permitted to be designed and constructed in accordance with this section. Prescriptive design of foundation walls shall not be used for structures assigned to Seismic Design Category D, E or F."

9-1-2-1807.2: RETAINING WALLS:
Section 1807.2 of Chapter 18, Part 2 of the CBC is amended and restated as follows:

> "**1807.2 Retaining walls.** Retaining walls shall be designed in accordance with Section 1807.2.1 through 1807.2.4. Retaining walls assigned to Seismic Design Category D, E or F shall not be partially or wholly constructed of wood."

9-1-2-1809.3: STEPPED FOOTINGS:
Section 1809.3 of Chapter 18, Part 2 of the CBC is amended and restated as follows:

> "**1809.3 Stepped footings.** The top surface of footings shall be level. The bottom surface of footings shall be permitted to have a slope not exceeding one unit vertical in 10 units horizontal (10 percent slope). Footings shall be stepped where it is necessary to change the elevation of the top surface of the footing or where the surface of the ground slopes more than one unit vertical in 10 units horizontal (10 percent slope).
>
> For structures assigned to Seismic Design Category D, E or F, the stepping requirement shall also apply to the top surface of continuous footings supporting walls. Footings shall be reinforced with four No. 4 deformed reinforcing bars. Two bars shall be placed at the top and bottom of the footings as shown in Figure 1809.3.

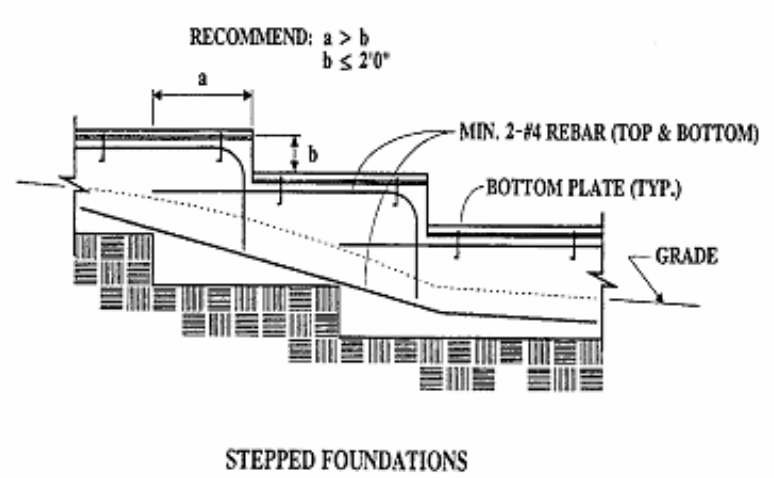

FIGURE 1809.3STEPPED FOOTING"

9-1-2-1809.7: PRESCRIPTIVE FOOTINGS FOR LIGHT-FRAME CONSTRUCTION:

Section 1809.7 and Table 1809.7 of Chapter 18, Part 2 of the CBC are amended and restated as follows:

"**1809.7 Prescriptive footings for light-frame construction.** Where a specific design is not provided, concrete or masonry-unit footings supporting walls of light-frame construction shall be permitted to be designed in accordance with Table 1809.7. Light-frame construction using prescriptive footings in Table 1809.7 shall not exceed one story above grade plane for structures assigned to Seismic Design Category D, E or F.

TABLE 1809.7
PRESCRIPTIVE FOOTINGS SUPPORTING WALLS OF LIGHT-FRAME CONSTRUCTION [a, b, d, e]

NUMBER OF FLOORS SUPPORTED BY THE FOOTING [f]	WIDTH OF FOOTING (inches)	THICKNESS OF FOOTING (inches)
1	12	6
2	15	6
3	18	8

For SI: 1 inch = 25.4 mm, 1 foot = 304.8 mm

a. Depth of footings shall be in accordance with Section 1809.4.
b. The ground under the floor shall be permitted to be excavated to the elevation of the top of the footing.
d. See Section 1905 for additional requirements for concrete footings of structures assigned to Seismic Design Category C, D, E or F.
e. For thickness of foundation walls, see Section 1807.1.6.
f. Footings shall be permitted to support a roof addition to the stipulated number of floors. Footings supporting roof only shall be as required for supporting one floor."

9-1-2-1809.12: TIMBER FOOTINGS:
Section 1809.12 of Chapter 18, Part 2 of the CBC is amended and restated as follows:

> "**1809.12 Timber footings.** Timber footings shall be permitted for buildings of Type V construction and as otherwise approved by the Building Official. Such footings shall be treated in accordance with AWPA U1 (Commodity Specification A, Use Category 4B). Treated timbers are not required where placed entirely below permanent water level, or where used as capping for wood piles that project above the water level over submerged or marsh lands. The compressive stresses perpendicular to grain in untreated timber footings supported on treated piles shall not exceed 70 percent of the allowable stresses for the species and grade of timber as specified in the ANSI/AWC NDS. Timber footings shall not be used in structures assigned to Seismic Design Category D, E or F."

9-1-2-1810.3.2.4: TIMBER:
Section 1810.3.2.4 of Chapter 18, Part 2 of the CBC is amended and restated as follows:

> "**1810.3.2.4 Timber.** Timber deep foundation elements shall be designed as piles or poles in accordance with ANSI/AWC NDS. Round timber elements shall conform to ASTM D25. Sawn timber elements shall conform to DOC PS-20. Timber deep foundation elements shall not be used in structures assigned to Seismic Design Category D, E or F."

9-1-2-1905.1: CONCRETE – SEISMIC REQUIREMENTS:
Section 1905.1 of Chapter 19, Part 2 of the CBC is amended and restated as follows:

> "**1905.1 General.** The text of ACI 318 shall be modified as indicated in the following subsections."

9-1-2-1905.6.2: ACI 318, SECTION 14.1.4:
Section 1905.6.2 of Chapter 19, Part 2 of the CBC is amended and restated as follows:

> "**1905.6.2 ACI 318, Section 14.1.4.** Delete ACI 318, Section 14.1.4 and replace with the following:
>
> > *14.1.4 – Plain concrete in structures assigned to Seismic Design Category C, D, E or F.*
> >
> > *14.1.4.1 – Structures assigned to Seismic Design Category C, D, E or F shall not have elements of structural plain concrete, except as follows:*
> >
> > *(a) Concrete used for fill with a minimum cement content of two (2) sacks of Portland cement or cementitious material per cubic yard.*
> > *(b) Isolated footings of plain concrete supporting pedestals or columns are permitted, provided the projection of the footing beyond the face of the supported member does not exceed the footing thickness.*

(c) Plain concrete footings supporting walls are permitted provided the footings have at least two continuous longitudinal reinforcing bars. Bars shall not be smaller than No. 4 and shall have a total area of not less than 0.002 times the gross cross-sectional area of the footing. A minimum of one bar shall be provided at the top and bottom of the footing. Continuity of reinforcement shall be provided at corners and intersections.

Exception:

1. Detached one- and two-family dwellings three stories or less in height and constructed with stud-bearing walls, are permitted to have plain concrete footings with at least two continuous longitudinal reinforcing bars not smaller than No. 4 are permitted to have a total area of less than 0.002 times the gross cross-sectional area of the footing."

9-1-2-1905.8: ACI 318, SECTION 18.7.5:
The following section is added to Chapter 19, Part 2 of the CBC:

"19059.8311 ACI 318, Section 18.7.5. Modify ACI 318, Section 18.7.5, by adding the following subsections to read as follows:

18.7.5.8 - Where the calculated point of contraflexure is not within the middle half of the member clear height, provide transverse reinforcement as specified in ACI 318 Sections 18.7.5.1, Items (a) through (c), over the full height of the member.
18.7.5.9 – At any section where the design strength, φP_n, of the column is less than the sum of the shears V_e computed in accordance with ACI 318 Sections 18.7.6.1 and 18.6.5.1 for all the beams framing into the column above the level under consideration, transverse reinforcement as specified in ACI 318 Sections 18.7.5.1 through 18.7.5.3 shall be provided. For beams framing into opposite sides of the column, the moment components are permitted to be assumed to be of opposite sign. For the determination of the design strength, φP_n, of the column, these moments are permitted to be assumed to result from the deformation of the frame in any one principal axis."

9-1-2-1905.9: ACI 318, SECTION 18.10.4:
The following section is added to Chapter 19, Part 2 of the CBC:

"19059.932 ACI 318, Section 18.10.4. Modify ACI 318, Section 18.10.4, by adding subsection 18.10.4.7 to read as follows:

18.10.4.7 – Walls and portions of walls with $P_u > 0.35P_o$ shall not be considered to contribute to the calculated shear strength of the structure for

resisting earthquake-induced forces. Such walls shall conform to the requirements of ACI 318 Section 18.14."

9-1-2-1905.10: ACI 318, SECTION 18.12.6:
The following section is added to Chapter 19, Part 2 of the CBC:

"**19059.1033 ACI 318, Section 18.12.6.** Modify ACI 318, Section 18.12.6, by adding subsection 18.12.6.2 to read as follows:

18.12.6.2 - Collector and boundary elements in topping slabs placed over precast floor and roof elements shall not be less than 3 inches (76 mm) or 6 d_b in thickness, where d_b is the diameter of the largest reinforcement in the topping slab."

9-1-2-2304.10.2: FASTENER REQUIREMENTS:
Section 2304.10.2 of Chapter 23, Part 2 of the CBC is amended and restated as follows:

"**2304.10.2 Fastener requirements.** Connections for wood members shall be designed in accordance with the appropriate methodology in Section 2302.1. The number and size of fasteners connecting wood members shall not be less than that set forth in Table 2304.10.2. Staple fasteners in Table 2304.10.2 shall not be used to resist or transfer seismic forces in structures assigned to Seismic Design Category D, E or F."

9-1-2-2304.10.3.1: QUALITY OF NAILS:
The following section is added to Chapter 23, Part 2 of the CBC:

"**2304.10.3.1 Quality of nails.** In Seismic Design Category D, E or F, mechanically driven nails used in wood structural panel shear walls shall meet the same dimensions as that required for hand-driven nails, including diameter, minimum length and minimum head diameter. Clipped head or box nails are not permitted in new construction. The allowable design value for clipped head nails in existing construction may be taken at no more than the nail-head-area ratio of that of the same size hand-driven nails."

9-1-2-2304.12.2.8: WOOD USED IN RETAINING WALLS AND CRIBS:
Section 2304.12.2.8 of Chapter 23, Part 2 of the CBC is amended and restated as follows:

"**2304.12.2.8 Wood used in retaining walls and cribs.** Wood installed in retaining or crib walls shall be preservative treated in accordance with AWPA U1 for soil and freshwater use. Wood shall not be used in retaining or crib walls for structures assigned to Seismic Design Category D, E or F."

9-1-2-2305.4: HOLD-DOWN CONNECTORS:
The following section is added to Chapter 23, Part 2 of the CBC:

"**2305.4 Hold-down connectors.** In Seismic Design Category D, E or F, hold-down connectors shall be designed to resist shear wall overturning moments using approved cyclic load values or 75 percent of the allowable seismic load values that do not consider cyclic loading of the product. Connector bolts into wood framing shall require steel plate washers on the post on the opposite side of the anchorage device. Plate size shall be a minimum of 0.229 inch by 3 inches by 3 inches (5.82 mm by 76 mm by 76 mm) in size. Hold-down connectors shall be tightened to finger tight plus one half (1/2) wrench turn just prior to covering the wall framing."

9-1-2-2306.2: WOOD-FRAME DIAPHRAGMS:
Section 2306.2 of Chapter 23, Part 2 of the CBC is amended and restated as follows:

"**2306.2 Wood-frame diaphragms.** Wood-frame diaphragms shall be designed and constructed in accordance with AWC SDPWS. Where panels are fastened to framing members with staples, requirements and limitations of AWC SDPWS shall be met and the allowable shear values set forth in Table 2306.2(1) or 2306.2(2) shall only be permitted for structures assigned to Seismic Design Category A, B, or C.

The allowable shear values in Tables 2306.2(1) and 2306.2(2) are permitted to be increased 40 percent for wind design.

Wood structural panel diaphragms used to resist seismic forces in structures assigned to Seismic Design Category D, E or F shall be applied directly to the framing members.

Exception: Wood structural panel diaphragms are permitted to be fastened over solid lumber planking or laminated decking, provided the panel joints and lumber planking or laminated decking joints do not coincide."

9-1-2-2306.3: WOOD-FRAME SHEAR WALLS:
Section 2306.3 of Chapter 23, Part 2 of the CBC is amended and restated as follows:

"**2306.3 Wood-frame shear walls.** Wood-frame shear walls shall be designed and constructed in accordance with AWC SDPWS. For structures assigned to Seismic Design Category D, E, or F, application of Tables 4.3A and 4.3B of AWC SDPWS shall include the following:

1. Wood structural panel thickness for shear walls shall not be less than 3/8 inch thick and studs shall not be spaced at more than 16 inches on center.
2. The maximum nominal unit shear capacities for 3/8 inch wood structural panels resisting seismic forces in structures assigned to Seismic Design Category D, E or F is 400 pounds per linear foot (plf).
3. Nails shall be placed not less than 1/2 inch in from the panel edges and not less than 3/8 inch from the edge of the connecting members for shear greater than 350 plf using ASD or 500 plf using LRFD. Nails shall be placed not less

than 3/8 inch from panel edges and not less than 1/4 inch from the edge of the connecting members for shears of 350 plf or less using ASD or 500 plf or less using LRFD.

4. Table 4.3B application is not allowed for structures assigned to Seismic Design Category D, E, or F.

For structures assigned to Seismic Design Category D, application of Table 4.3C of AWC SDPWS shall not be used below the top level in a multi-level building.

Where panels are fastened to framing members with staples, requirements and limitations of AWC SDPWS shall be met and the allowable shear values set forth in Table 2306.3(1), 2306.3(2) or 2306.3(3) shall only be permitted for structures assigned to Seismic Design Category A, B, or C.

The allowable shear values in Tables 2306.3(1) and 2306.3(2) are permitted to be increased 40 percent for wind design. Panels complying with ANSI/APA PRP-210 shall be permitted to use design values for Plywood Siding in the AWC SDPWS."

9-1-2-2307.2: LRFD DESIGN - WOOD-FRAME SHEAR WALLS:
The following section is added to Chapter 23, Part 2 of the CBC:

"**2307.2 Wood-frame shear walls.** Wood-frame shear walls shall be designed and constructed in accordance with Section 2306.3 as applicable."

9-1-2-2308.10: WALL BRACING:
Table 2308.10.1 of Chapter 23, Part 2 of the CBC is amended and restated as follows:

TABLE 2308.10.1[a]
WALL BRACING REQUIREMENTS

SEISMIC DESIGN CATEGORY	STORY CONDITION (SEE SECTION 2308.2)	MAXIMUM SPACING OF BRACED WALL LINES	BRACED PANEL LOCATION, SPACING (O.C.) AND MINIMUM PERCENTAGE (X)			MAXIMUM DISTANCE OF BRACED WALL PANELS FROM EACH END OF BRACED WALL LINE
			Bracing method[b]			
			LIB	DWB, WSP	SFB, PBS, PCP, HPS, GB[c,d]	
A and B	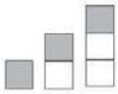	35′- 0″	Each end and ≤ 25′- 0″ o.c.	Each end and ≤ 25′- 0″ o.c.	Each end and ≤ 25′- 0″ o.c.	12′- 6″
		35′- 0″	Each end and ≤ 25′- 0″ o.c.	Each end and ≤ 25′- 0″ o.c.	Each end and ≤ 25′- 0″ o.c.	12′- 6″
		35′- 0″	NP	Each end and ≤ 25′- 0″ o.c.	Each end and ≤ 25′- 0″ o.c.	12′- 6″
C		35′- 0″	NP	Each end and ≤ 25′- 0″ o.c.	Each end and ≤ 25′- 0″ o.c.	12′- 6″
		35′- 0″	NP	Each end and ≤ 25′- 0″ o.c. (minimum 25% of wall length)[e]	Each end and ≤ 25′- 0″ o.c. (minimum 25% of wall length)[e]	12′- 6″
D and E[f, g, h]		25′- 0″	NP	$S_{DS} < 0.50$: Each end and ≤ 25′- 0″ o.c. (minimum 21% of wall length)[e]	$S_{DS} < 0.50$: Each end and ≤ 25′- 0″ o.c. (minimum 43% of wall length)[e]	8′- 0″
				$0.5 \le S_{DS} < 0.75$: Each end and ≤ 25′- 0″ o.c. (minimum 32% of wall length)[e]	$0.5 \le S_{DS} < 0.75$: Each end and ≤ 25′- 0″ o.c. (minimum 59% of wall length)[e]	
				$0.75 \le S_{DS} \le 1.00$: Each end and ≤ 25′- 0″ o.c. (minimum 37% of wall length)[e]	$0.75 \le S_{DS} \le 1.00$: Each end and ≤ 25′- 0″ o.c. (minimum 75% of wall length)	
				$S_{DS} > 1.00$: Each end and ≤ 25′- 0″ o.c. (minimum 48% of wall length)[e]	$S_{DS} > 1.00$: Each end and ≤ 25′- 0″ o.c. (minimum 100% of wall length)[e]	

For SI: 1 inch = 25.4 mm, 1 foot = 304.8 mm.

NP = Not Permitted.

a. This table specifies minimum requirements for braced wall panels along interior or exterior braced wall lines.

b. See Section 2308.10.3 for full description of bracing methods.

c. For Method GB, gypsum wallboard applied to framing supports that are spaced at 16 inches on center.

d. The required lengths shall be doubled for gypsum board applied to only one face of a braced wall panel.

e. Percentage shown represents the minimum amount of bracing required along the building length (or wall length if the structure has an irregular shape).

f. DWB, SFB, PBS, and HPS wall braces are not permitted in Seismic Design Categories D or E.

g. Minimum length of panel bracing of one face of the wall for WSP sheathing shall be at least 4'-0" long or both faces of the wall for GB or PCP sheathing shall be at least 8'-0" long; h/w ratio shall not exceed 2:1. Wall framing to which sheathing used for bracing is applied shall be nominal 2 inch wide [actual 1 1/2 inch (38 mm) or larger members and spaced a maximum of 16 inches on center. Braced wall panel construction types shall not be mixed within a braced wall line.

h. WSP sheathing shall be a minimum of 15/32" thick nailed with 8d common placed 3/8 inches from panel edges and spaced not more than 6 inches on center and 12 inches on center along intermediate framing members.

9-1-2-2308.10.5.1: ALTERNATE BRACED WALL (ABW):
Section 2308.10.5.1 and Figure 2308.10.5.1, of Chapter 23, Part 2 of the CBC are amended and restated as follows:

> **"2308.10.5.1 Alternate braced wall (ABW).** An ABW shall be constructed in accordance with this section and Figure 2308.10.5.1. In one-story buildings, each panel shall have a length of not less than 2 feet 8 inches (813 mm) and a height of not more than 10 feet (3048 mm). Each panel shall be sheathed on one face with 3/8-inch (3.2 mm) minimum-thickness wood structural panel sheathing nailed with 8d common or galvanized box nails in accordance with Table 2304.10.2 and blocked at wood structural panel edges. For structures assigned to Seismic Design Category D or E, each panel shall be sheathed on one face with 15/32-inch-minimum-thickness (11.9 mm) wood structural panel sheathing nailed with 8d common nails spaced 3 inches on panel edges, 3 inches at intermediate supports. Two anchor bolts installed in accordance with Section 2308.7.1 shall be provided in each panel. Anchor bolts shall be placed at each panel outside quarter points. Each panel end stud shall have a hold-down device fastened to the foundation, capable of providing an approved uplift capacity of not less than 1,800 pounds (8006 N). The hold-down device shall be installed in accordance with the manufacturer's recommendations. The ABW shall be supported directly on a foundation or on floor framing supported directly on a foundation that is continuous across the entire length of the braced wall line. This foundation shall be reinforced with not less than one No. 4 bar top and bottom. Where the continuous foundation is required to have a depth greater than 12 inches (305 mm), a minimum 12-inch by 12-inch (305 mm by 305 mm) continuous footing is permitted at door openings in the braced wall line. This continuous footing shall be reinforced with not less than one No. 4 bar top and bottom. This reinforcement shall be lapped 24 inches (610 mm) with the reinforcement required in the continuous foundation located directly under the braced wall line.
>
> Where the ABW is installed at the first story of two-story buildings, the wood structural panel sheathing shall be provided on both faces, three anchor bolts shall be placed at one-quarter points and tie-down device uplift capacity shall be not less than 3,000 pounds (13 344 N)."

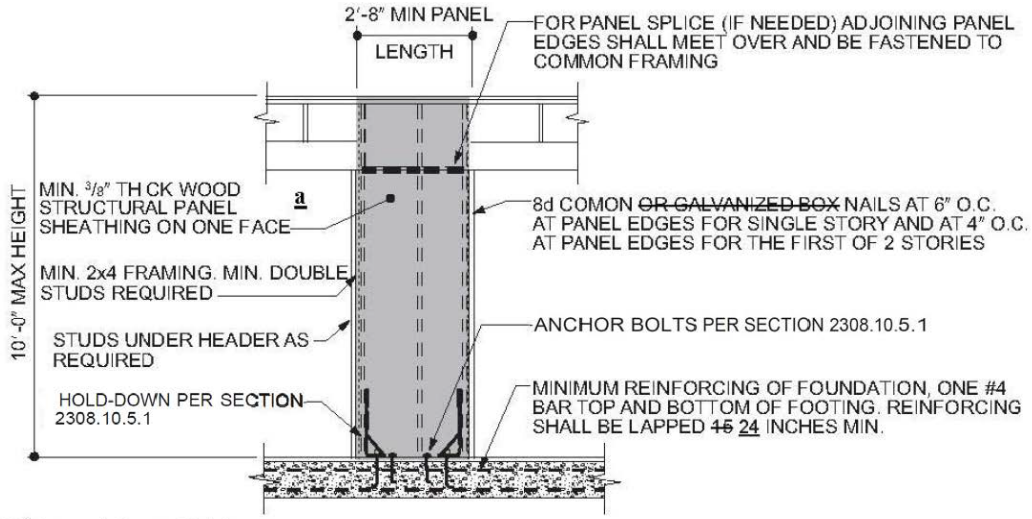

For SI: 1 inch = 25.4 mm, 1 foot = 304.8 mm.

a. For structures assigned to Seismic Design Category D or E, sheathed on one face with 15/32-inch-minimum-thickness (11.9 mm) wood structural panel sheathing.

FIGURE 2308.10.5.1
ALTERNATE BRACED WALL PANEL (ABW)

9-1-2-2308.10.5.2: PORTAL FRAME WITH HOLD-DOWNS (PFH):
Section 2308.10.5.2 and Figure 2308.10.5.2, of Chapter 23, Part 2 of the CBC are amended and restated as follows:

"**2308.10.5.2 Portal frame with hold-downs (PFH).** A PFH shall be constructed in accordance with this section and Figure 2308.10.5.2. The adjacent door or window opening shall have a full-length header.

In one-story buildings, each panel shall have a length of not less than 16 inches (406 mm) and a height of not more than 10 feet (3048 mm). Each panel shall be sheathed on one face with a single layer of 3/8-inch (9.5 mm) minimum-thickness wood structural panel sheathing nailed with 8d common or galvanized box nails in accordance with Figure 2308.10.5.2. For structures assigned to Seismic Design Category D or E, each panel shall be sheathed on one face with 15/32-inch-minimum-thickness (11.9 mm) wood structural panel sheathing nailed with 8d common nails spaced 3 inches on panel edges, 3 inches at intermediate supports and in accordance with Figure 2308.10.5.2. The wood structural panel sheathing shall extend up over the solid sawn or glued-laminated header and shall be nailed in accordance with Figure 2308.10.5.2. A built-up header consisting of at least two 2-inch by 12-inch (51 mm by 305 mm) boards, fastened in accordance with Item

24 of Table 2304.10.2 shall be permitted to be used. A spacer, if used, shall be placed on the side of the built-up beam opposite the wood structural panel sheathing. The header shall extend between the inside faces of the first full-length outer studs of each panel. The clear span of the header between the inner studs of each panel shall be not less than 6 feet (1829 mm) and not more than 18 feet (5486 mm) in length. A strap with an uplift capacity of not less than 1,000 pounds (4,400 N) shall fasten the header to the inner studs opposite the sheathing. One anchor bolt not less than 5/8 inch (15.9 mm) diameter and installed in accordance with Section 2308.7.1 shall be provided in the center of each sill plate. The studs at each end of the panel shall have a hold-down device fastened to the foundation with an uplift capacity of not less than 3,500 pounds (15 570 N).

Where a panel is located on one side of the opening, the header shall extend between the inside face of the first full-length stud of the panel and the bearing studs at the other end of the opening. A strap with an uplift capacity of not less than 1,000 pounds (4400 N) shall fasten the header to the bearing studs. The bearing studs shall also have a hold-down device fastened to the foundation with an uplift capacity of not less than 1,000 pounds (4400 N). The hold-down devices shall be an embedded strap type, installed in accordance with the manufacturer's recommendations. The PFH panels shall be supported directly on a foundation that is continuous across the entire length of the braced wall line. This foundation shall be reinforced with not less than one No. 4 bar top and bottom. Where the continuous foundation is required to have a depth greater than 12 inches (305 mm), a minimum 12-inch by 12-inch (305 mm by 305 mm) continuous footing is permitted at door openings in the braced wall line. This continuous footing shall be reinforced with not less than one No. 4 bar top and bottom. This reinforcement shall be lapped not less than 24 inches (610 mm) with the reinforcement required in the continuous foundation located directly under the braced wall line.

Where a PFH is installed at the first story of two-story buildings, each panel shall have a length of not less than 24 inches (610 mm)."

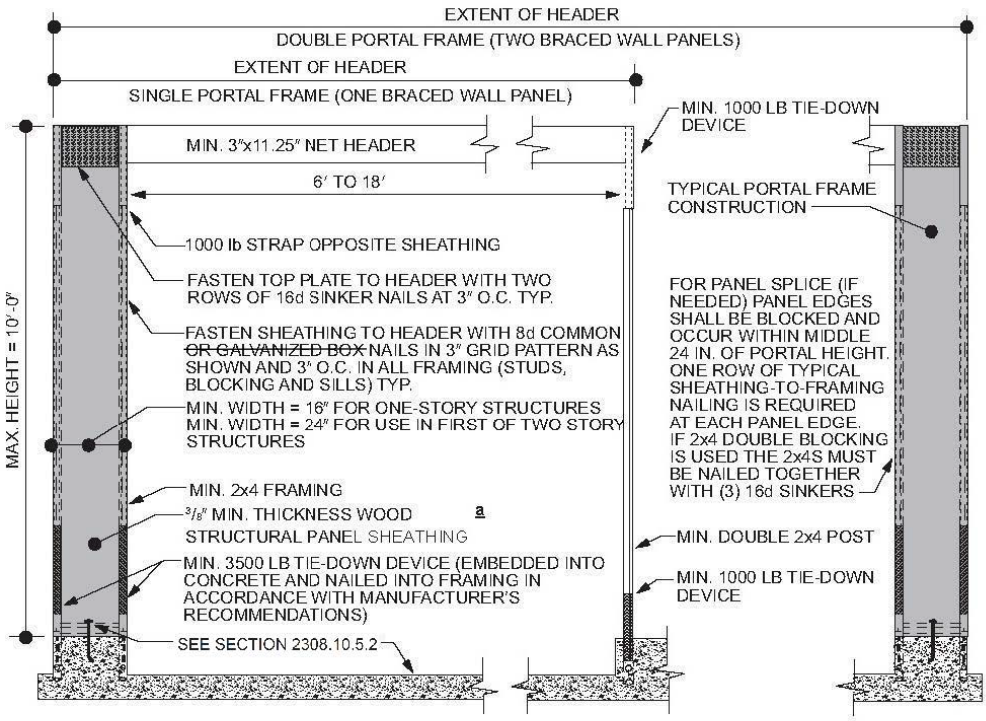

For SI: 1 inch = 25.4 mm, 1 foot = 304.8 mm, 1 pound = 4.448 N.

a. For structures assigned to Seismic Design Category D or E, sheathed on one face with 15/32-inch-minimum-thickness (11.9 mm) wood structural panel sheathing.

FIGURE 2308.10.5.2
PORTAL FRAME WITH HOLD-DOWNS (PFH)

9-1-2-2308.10.8.1: FOUNDATION REQUIREMENTS:
Section 2308.10.8.1 of Chapter 23, Part 2 of the CBC is amended and restated as follows:

"**2308.10.8.1 Foundation requirements.** Braced wall lines shall be supported by continuous foundations.

Exception: For structures with a maximum plan dimension not more than 50 feet (15240 mm), continuous foundations are required at exterior walls only for structures assigned to Seismic Design Category A, B, or C.

For structures in Seismic Design Categories D and E, exterior braced wall panels shall be in the same plane vertically with the foundation or the portion of the structure containing the offset shall be designed in accordance with accepted engineering practice and Section 2308.3"

9-1-2-2308.10.9: ATTACHMENT OF SHEATHING:
Section 2308.10.9 of Chapter 23, Part 2 of the CBC is amended and restated as follows:

"**2308.10.9 Attachment of sheathing.** Fastening of braced wall panel sheathing shall not be less than that prescribed in Tables 2308.10.1 or 2304.10.2. Wall

sheathing shall not be attached to framing members by adhesives. Staple fasteners in Table 2304.10.2 shall not be used to resist or transfer seismic forces in structures assigned to Seismic Design Category D, E or F.

All braced wall panels shall extend to the roof sheathing and shall be attached to parallel roof rafters or blocking above with framing clips (18 gauge minimum) spaced at maximum 24 inches (6096 mm) on center with four 8d nails per leg (total eight 8d nails per clip). Braced wall panels shall be laterally braced at each top corner and at maximum 24 inches (6096 mm) intervals along the top plate of discontinuous vertical framing."

9-1-2-3114.1: INTERMODAL SHIPPING CONTAINERS:
Section 3114.1 of Chapter 31, Part 2 of the CBC is amended to include the following subsection:

"Exceptions:

6. Single-unit stand-alone intermodal shipping containers used as temporary storage or construction trailer on active construction sites. construction support facilities for uses and activities not directly associated with the actual processes of construction, including but not limited to, offices, meeting rooms, plan rooms, other administrative or support."

9-1-2-3203: BUILDING ON PUBLIC EASEMENT PROHIBITED:
The following section is added to Chapter 32, Part 2 of the CBC:

"**SECTION 3203**
BUILDING ON PUBLIC EASEMENT PROHIBITED

3203.1 Prohibition. No person shall erect, construct, alter, repair, raise, build or move any permanent building, structure, paving, or portion thereof, upon any easement or right-of-way, reserved by the original grantor of a lot or parcel of land or conveyed, granted or dedicated to the City for drainage or public utility purposes, including the construction and maintenance of pipes, conduits, open ditches, poles, wires or other facilities for conveying gas, electricity, power, water, telephone and telegraph service or sewerage to and from property within the City, without the written consent of the City or owner of the easement or right-of-way, as the case may be. The records of the County Recorder of the County shall be prima facie, but not conclusive, proof of the existence of such easement or right-of-way."

9-1-2-3302.4: CONSTRUCTION FENCING:
The following section is added to Chapter 33, Part 2 of the CBC:

"**3302.4 Construction fencing.** In addition to the requirements of Section 3306 of the California Building Code, Protection of Pedestrians, every construction site shall be enclosed by a barrier to prevent unauthorized access.

The barrier shall extend the entire perimeter of the construction site. Openings shall be protected by gates that shall be kept closed and locked during non-operational hours.

EXCEPTION:
1. Construction fencing may be removed during operational hours to permit access for construction activity. The construction fencing shall be replaced during non-operational hours. Construction fencing is not required to extend beyond existing site fencing provided the fencing is located solely upon the private property upon which such work is being done."

9-1-2-3305.1: FACILITIES REQUIRED:
Section 3305.1 of Chapter 33, Part 2 of the CBC is amended and restated as follows:

"**3305.1 Facilities required.** Sanitary facilities shall be provided during construction, remodeling or demolition activities in accordance with the *California Plumbing Code*.

EXCEPTION:
In lieu of flush water closets, chemical toilets may be provided. Chemical toilets shall be located solely upon the private property upon which such work is being done. The toilets shall be located and maintained to prevent them from becoming a nuisance to the adjoining properties."

9-1-2-3305.2: GARBAGE CONTAINERS:
The following section is added to Chapter 33, Part 2 of the CBC:

"**3305.2 Garbage containers.** Garbage containers shall be provided during construction, remodeling or demolition activities. Garbage containers shall be located solely upon the private property upon which such work is being done. The containers shall be located and maintained to prevent them from becoming a nuisance to the adjoining properties.

EXCEPTION:
Garbage containers for which a valid encroachment permit has been issued by the Public Works Department.

9-1-2-C105: (APPENDIX C) COMMERCIAL STABLES:
The following section is added to Appendix C, Part 2 of the CBC:

"**SECTION C105**
COMMERCIAL STABLES

C105.1 Commercial stable defined. As used in this section, "commercial stable" shall mean all enclosed structures designed or used commercially to shelter

horses. Enclosure shall be by means of permanent walls beneath the roof of the structure and shall be solid except for necessary ventilation and access opening.

C105.2 Automatic fire-extinguishing systems required. All commercial stables shall be equipped with automatic fire-extinguishing systems which comply with Section 903 of the California Building Code.

C105.3 Living quarters; separation and fire-walls required. Living quarters in separate structures on the premises shall be separated from commercial stables by a 13 foot yard. Living quarters in commercial stables shall be separated from the stable area by a one-hour, unpierced occupancy separation wall.

C105.6 Exceptions.

1. Automatic fire-extinguishing systems are not required in stables of Type IA construction.
2. Existing commercial stables may install fire-resistive separations and automatic fire-extinguishing systems providing minimum coverage and approved by the Building and Fire Departments in accordance with the following minimum standards:
   (a) The automatic fire-extinguishing system shall be supplied through a separate meter by a two-inch line equipped with a water-flow-alarm system. Sprinkler heads shall be taken off the two-inch main line with a three-quarter inch line. One sprinkler head shall be installed in each stall; and in all other areas one sprinkler head shall be installed in each room division not exceeding one sprinkler head for each 100 square feet.
   (b) Fire-resistive separations shall be one-hour unpierced fire-resistive separations installed in existing commercial stables in excess of 200 feet in length with separation every 400 square feet or every 40 lineal feet, whichever provides the greater number of separations."

9-1-2-G101.6: (APPENDIX G) FLOOD-RESISTANT CONSTRUCTION- WARNING AND DISCLAIMER OF LIABILITY:
The following section is added to Appendix G, Part 2 of the CBC:

"**G101.6 Warning and disclaimer of liability.** The degree of flood protection required by this article is considered reasonable for regulatory purposes and is based on scientific and engineering considerations. Larger floods can and will occur on rare occasions. Flood heights may be increased by man-made or natural causes. This article does not imply that land outside the areas of special flood hazards or uses permitted within such areas will be free from flooding or flood damages. This article shall not create liability on the part of the City, any officer or employee thereof for any flood damages that result from reliance on this article, or any administrative decision lawfully made thereunder."

9-1-2-G103.2: (APPENDIX G) ESTABLISHMENT OF FLOOD HAZARD AREA:
Section G103.2 of Appendix G, Part 2 of the CBC is amended as follows:

Insert: “January 1, 2011” into the [Date] field in Section G103.2 of Appendix G of the California Building Code.

9-1-2-G104.11: (APPENDIX G) DUTIES AND RESPONSIBILITIES OF THE FLOODPLAIN ADMINISTRATOR:
The following sections are added to Appendix G, Part 2 of the CBC:

“G104.11 Duties and responsibilities of the floodplain administrator.

G104.11.1 Definition - Floodplain administrator. "FLOODPLAIN ADMINISTRATOR" means the Public Works Director or his designee.

G104.11.2 Duties - Floodplain administrator. The duties and responsibilities of the Floodplain Administrator shall include, but not be limited to:

A. PERMIT REVIEW.
1. Review all development permits to determine that the permit requirements of this article have been satisfied;
2. All other required state and federal permits have been obtained;
3. The site is reasonably safe from flooding;
4. Require until a regulatory floodway is designated, that no new construction, substantial improvements, or other development (including fill) shall be permitted within Zones A1-30 and AE on the FIRM, unless it is demonstrated that the cumulative effect of the proposed development, when combined with all other existing and anticipated development, will not increase the water surface elevation of the base flood more than one foot at any point within the City.

B. USE OF OTHER BASE FLOOD DATA.
When base flood elevation data has not been provided in accordance with Section 1612A of the California Building Code, the Floodplain Administrator shall determine the design flood elevations in accordance with Section G104.3, Appendix G, of the California Building Code. Any such information shall be submitted to the Council for adoption.

C. CHANGES IN WATERCOURSE.
Whenever a watercourse is to be altered or relocated:
1. Notify adjacent communities and the California Department of Water Resources prior to such alteration or relocation of a watercourse, and submit evidence of such notification to the Federal Insurance Administration;
2. Require that the flood carrying capacity of the altered or relocated portion of said watercourse is maintained.

D. PUBLIC INSPECTION.
Obtain and maintain for public inspection and make available as needed the flood hazard documentation required in Section 1612A.4 of the California Building Code.

E. INTERPRETATIONS.
Make interpretations where needed, as to the exact location of the boundaries of the areas of special flood hazards (for example, where there appears to be a conflict between a mapped boundary and actual field conditions). The person contesting the location of the boundary shall be given a reasonable opportunity to appeal the interpretation as provided in Section G106, Appendix G of the California Building Code.

F. ENFORCEMENT.
Take action to remedy violations of this article as specified in Section 114 of the California Building Code."

9-1-2-J104.5: (APPENDIX J) FEES, BONDS AND INSURANCE - EXCAVATION AND GRADING:
The following section is added to Appendix J, Part 2 of the CBC:

"**J104.5 Fees, bonds and insurance - excavation and grading.**

A. Fees shall be assessed in accordance with the provisions of this section and as set forth in the Burbank Fee Resolution.

B. The Building Official shall require bonds in such form and amounts as may be deemed necessary to ensure that the work, if not completed in accordance with the approved plans and specifications, will be corrected to eliminate hazardous conditions.

(i) BOND REQUIREMENTS.
Whenever an application for a grading permit is filed for the excavation or fill of 250 cubic yards or more in the Hillside Area, as defined in Diagram 10-1-606(A) of the Burbank Municipal Code, or for the excavation or fill of 500 cubic yards or more in other areas, and the nature of the work is such that if left incomplete it will create a hazard to human life or endanger adjoining property, or property at a higher or lower level, or to any street or street improvement or any other public property, the Building Official shall, before issuing the grading permit, require the applicant to guarantee faithful performance and payment of labor and material in an amount determined by the Building Official, which shall be not less than 100 percent of the total estimated cost of the work, including corrective work necessary to remove or eliminate geological hazards. An additional cash deposit may be required by the Building Official in the form of a cash bond sufficient to cover the cost of site cleanup and debris

removal. Where grading is required on property adjacent to the grading site to complete a project satisfactorily, the owner of the adjacent property need not provide additional security if the original guarantee is of sufficient amount to include such additional grading. Each bond and agreement shall remain in effect until the work authorized by the grading permit is completed and approved by the Building Official.

(ii) TYPE OF BOND.
A guarantee of faithful performance and payment of labor and material, when required under the provisions of this section, shall be provided by one of the following methods:

(a) A bond executed by the applicant, as principal, and a corporate surety authorized to do business in the State of California, as surety, and in a form furnished by the Building Official and approved by the City Attorney.
(b) A cash deposit with the City.
(c) An instrument or instruments of credit from one or more financial institutions subject to regulation by the State or Federal government pledging that the funds necessary to meet the performance are on deposit and guaranteed for payment, and an agreement that the funds designated by the instrument shall become trust funds for the purpose of securing faithful performance and payment of labor and material. The instrument of credit and the agreement shall first be approved by the City Attorney.

(iii) PROCEDURE ON DEFAULT.
(a) Whenever the Building Official shall find that a default has occurred in the performance of any term or condition of any grading permit, written notice of the fact of default shall be given to the principal and to the corporate surety, financial institution or the depositor, stating the work to be done, and the period of time deemed by the Building Official to be reasonably necessary for the completion of such work. Thirty days after the receipt of such notice the principal or the surety shall perform or cause the required work to be performed by commencing and diligently prosecuting the work to its completion; but if they or either or both of them should fail to commence such work within 30 days, or having so commenced the work fail, neglect or refuse to proceed diligently to complete the same within the time so specified in the notice, then the City may enter the premises and do the work, and the cost and expense of doing the work so specified shall be the obligation of the principal and the surety, and shall be a part of the terms of the performance bond in consideration of the issuance of the grading permit. The principal and surety of such bond, if any, shall upon completion of the work, be released

from their obligation, after deducting and paying the City the cost of such work plus 10 percent of the total cost of such required work.

(b) If a cash bond has been posted, notice of default as provided by the preceding paragraph shall be given to the depositor, and if the depositor fails to cause the required work to be resumed as set forth in the notice within 30 days after receipt thereof, the Building Official shall proceed without delay and without further notice or proceedings whatsoever to use the cash deposited, or any portion thereof, and cause the required work to be completed by such mode as the Building Official deems convenient. After deducting the cost of such work plus 10 percent of the total cost of such required work, the balance of such cash deposit, if any, shall, upon completion of the work, be returned to the depositor or the depositor's successor or assigns.

(c) If an instrument of credit is used to guarantee performance, notice of default shall be given, as provided in paragraph (i) hereof, to the principal and to the financial institution issuing the instrument of credit, and if the principal fails to cause the required work to be resumed as set forth in the notice within 30 days after the receipt thereof, the Building Official shall make a demand upon the financial institution for the payment of the estimated costs from the trust fund held by the financial institution pursuant to the agreement. Upon receipt of said sum, the Building Official shall proceed without delay and without further notice or proceedings whatsoever to use the sum, or any portion thereof, and cause the required work to be completed by such mode as the Building Official deems convenient. After deducting the cost of such work plus 10 percent of the total cost of such required work, the balance of such sum, if any, shall, upon the completion of the work, be returned to the financial institution, its successors or assigns; but if the financial institution fails or refuses to pay over said sum, then Building Official shall proceed as in paragraph (1) hereof and shall look to said institution for the costs and expenses of the work, and the contractual liability of such institution therefore shall be a term or condition of its agreement.

C. INSURANCE REQUIREMENTS.

(i) PUBLIC LIABILITY AND PROPERTY DAMAGE INSURANCE.
The contractor shall assume all responsibility for damages to property, including property of the City, or injuries to persons, including accidental death, which may be caused by the contractor's performance of work under any grading permit, whether such performance be by the contractor, his/her subcontractor or anyone directly or indirectly employed by the contractor

and whether such damage shall accrue or be discovered before or after completion or termination of his/her contract. The contractor shall take out and maintain during the life of the grading permit a comprehensive liability policy, including contractual liability, as shall adequately protect the contractor and the City from claims for such damages, naming the City as an additional insured under the policy in an amount sufficient in the estimation of the Building Official to protect the City.

(ii) CERTIFICATE OF INSURANCE.
The contractor shall furnish a certificate of insurance countersigned by an authorized agent of the insurance carrier on a form of the insurance carrier setting forth the general provisions of the insurance coverage. The City shall be named as an additional insured on a separate endorsement attached to the certificate. The separate endorsement shall contain a statement of the obligation on the part of the insurance carrier to notify the City of any material change, cancellation, or termination of the coverage at least 30 days in advance of the effective date of any such material change, cancellation, or termination. The required certificate of insurance and separate endorsement shall be furnished by the contractor prior to the issuance of the grading permit. No such certificate of insurance or separate endorsement shall qualify until it has been approved as to form by the City."

9-1-2-J105.3: (APPENDIX J) CONSTRUCTION SITE MAINTENANCE-EXCAVATION AND GRADING:
The following section is added to Appendix J, Part 2 of the CBC:

"**J105.3 Construction site maintenance-excavation and grading.** Construction site maintenance, including fugitive dust control, hauling, roadway maintenance, watering, sweeping, erosion control, spillage, material and debris control, soil treatment, and environmental monitoring shall be in accordance with Article 4, Chapter 3 of Title 9 of the Burbank Municipal Code."

9-1-2-J110.3: (APPENDIX J) MAINTENANCE OF PROTECTIVE DEVICES - EXCAVATION AND GRADING:
The following section is added to Appendix J, Part 2 of the CBC:

"**J110.3 Maintenance of protective devices - excavation and grading.** The owner of any property on which grading or an excavation or fill has been made pursuant to a grading permit granted hereunder, and any other person or agent in control of such property, shall maintain in good condition and repair all retaining walls, cribbing, drainage structures, and other protective devices, including planting, and irrigation systems, shown in the approved plans and specifications submitted with the application for a grading permit or subsequently required by the Building Official."

ARTICLE 2R. CALIFORNIA RESIDENTIAL CODE

9-1-2R: ADOPTION OF THE 2025 CALIFORNIA RESIDENTIAL CODE:
Part 2.5 of Title 24 of the California Code of Regulations, also known as the "California Residential Code," which is part of the California Building Standards Code, 2025 Edition, together with Appendices BB and BF, as adopted by the California Building Standards Commission is hereby adopted by the City of Burbank and made a part of this Code, with certain amendments, additions, and deletions as stated in this Article.

9-1-2R-R101.1: TITLE:
Section R101.1 of Chapter 1, Part 2.5 of the CBC is amended and restated as follows:

> "**R101.1 Title.** These provisions shall be known as the *Residential Code for One- and Two-family Dwellings* of the City of Burbank, and shall be cited as such and will be referred to herein as "this code.""

9-1-2R-R301.1.3.2: WOODFRAME STRUCTURES: Section R301.1.3.2 of Chapter 3, Part 2.5 of the CBC is amended and restated as follows:

> "**R301.1.3.2 Woodframe structures.** The Building Official shall require construction documents to be approved and stamped by a California licensed architect or engineer for all dwellings of woodframe construction more than two stories and basement in height located in Seismic Design Category A, B or C. Notwithstanding other sections of law, the law establishing these provisions is found in Business and Professions Code Sections 5537 and 6737.1.
>
> The building official shall require construction documents to be approved and stamped by a California licensed architect or engineer for all dwellings of wood frame construction more than one story in height or with a basement located in Seismic Design Category D_0, D_1, or D_2."

9-1-2R-R301.1.5: SEISMIC DESIGN PROVISIONS FOR BUILDINGS CONSTRUCTED ON OR INTO SLOPES STEEPER THAN ONE UNIT VERTICAL IN THREE UNITS HORIZONTAL (33.3 PERCENT SLOPE):
The following section is added to Chapter 3, Part 2.5 of the CBC:

> "**R301.1.5 Seismic design provisions for buildings constructed on or into slopes steeper than one unit vertical in three units horizontal (33.3 percent slope).** The design and construction of new buildings and additions to existing buildings when constructed on or into slopes steeper than one unit vertical in three units horizontal (33.3 percent slope) shall comply with Section 9-1-2-1613.9 of the Burbank Municipal Code."

9-1-2R-R301.2: CLIMATIC AND GEOGRAPHIC DESIGN CRITERIA:
Table R301.2(1) of Chapter 3, Part 2.5 of the CBC is amended and restated as follows:

"Buildings shall be constructed in accordance with the provisions of this code and amended by the provisions of this section. Additional local jurisdiction criteria is set forth in Table R301.2(1) below.

TABLE R301.2(1)
CLIMATIC AND GEOGRAPHIC DESIGN CRITERIA

GROUND SNOW LOAD	WIND DESIGN		SEISMIC DESIGN CATEGORY[f]	SUBJECT TO DAMAGE FROM		
	SPEED[d] (MPH)	TOPOGRAPHIC EFFECTS[k]		WEATHERING[a]	FROST LINE DEPTH[b]	TERMITE[c]
No	110	No	D_0, D_1, D_2 & E	Negligible	No	Yes

WINTER DESIGN TEMP[e]	ICE BARRIER UNDERLAYMENT REQUIRED[h]	FLOOD HAZARDS[g]	AIR FREEZING INDEX[i]	MEAN ANNUAL TEMP[j]
42.3	No	a. Date of regular entry: Jan. 23, 1981 b. Date of Flood Insurance Study: Mar. 26, 1981 c. Community Number: 065018 Panel Numbers: 1328, 1329, 1330, 1335, 1337, 1339, 1345 Date of FIRM: Sept. 26, 2008	0	63.9

(For Notes a-k, see 2025 California Residential Code, Table R301.2(1))"

9-1-2R-R301.2.2.6: IRREGULAR BUILDINGS:
Subsections (1), (3), and (5) of Section R301.2.2.6 of Chapter 3, Part 2.5 of the CBC are amended and restated as follows:

"1. **Shear wall or braced wall offsets out of plane**. Conditions where exterior shear wall lines or braced wall panels are not in one plane vertically from the foundation to the uppermost story in which they are required.

3. **Shear wall or braced wall offsets in plane**. Conditions where the end of a braced wall panel occurs over an opening in the wall below.

5. **Floor level offset**. Conditions where portions of a floor level are vertically offset."

9-1-2R-R301.2.2.11: ANCHORAGE OF MECHANICAL, ELECTRICAL, OR PLUMBING COMPONENTS AND EQUIPMENT:
The following section is added to Chapter 3, Part 2.5 of the CBC:

"**R301.2.2.11 Anchorage of mechanical, electrical, or plumbing components and equipment.** Mechanical, electrical, or plumbing components and equipment

shall be anchored to the structure. Anchorage of the components and equipment shall be designed to resist loads in accordance with the California Building Code and ASCE 7, except where the component is positively attached to the structure and flexible connections are provided between the component and associated ductwork, piping, and conduit; and either

1. The component weighs 400 lb (1,780 N) or less and has a center of mass located 4 ft (1.22 m) or less above the supporting structure; or

2. The component weighs 20 lb (89 N) or less or, in the case of a distributed system, 5 lb/ft (73 N/m) or less.

9-1-2R-R401.1: FOUNDATIONS:
Section R401.1 of Chapter 4, Part 2.5 of the CBC is amended and restated as follows:

"**R401.1 Application.** The provisions of this chapter shall control the design and construction of the foundation and foundation spaces for buildings. In addition to the provisions of this chapter, the design and construction of foundations in flood hazard areas as established by Table R301.2 shall meet the provisions of Section R306. Wood foundations shall be designed and installed in accordance with AWC PWF.

Exception: The provisions of this chapter shall be permitted to be used for wood foundations only in the following situations:

1. In buildings that have no more than two floors and a roof.

2. When interior basement and foundation walls are constructed at intervals not exceeding 50 feet (15 240 mm).

Wood foundations in Seismic Design Category D_0, D_1, or D_2 shall not be permitted.

Exception: In non-occupied, single-story, detached storage sheds and similar uses other than carport or garage, provided the gross floor area does not exceed 120 square feet, the building height does not exceed 10 feet in height above the grade plane at any point, and the maximum roof projection does not exceed 24 inches."

9-1-2R-R403.1.2: CONTINUOUS FOOTING IN SEISMIC DESIGN CATEGORIES D_0, D_1 AND D_2:
Section R403.1.2 of Chapter 4, Part 2.5 of the CBC is amended and restated as follows:

"**R403.1.2. Continuous footing in seismic design categories D_0, D_1 and D_2.** Exterior walls of buildings located in Seismic Design Categories D_0, D_1 and D_2 shall be supported by continuous solid or fully grouted masonry or concrete footings. All

required interior braced wall panels in buildings located in Seismic Design Categories D_0, D_1 and D_2 shall be supported on continuous foundations."

9-1-2R-R403.1.3.6: ISOLATED CONCRETE FOOTINGS:
Section R403.1.3.6 of Chapter 4, Part 2.5 of the CBC is amended and restated as follows:

"**R403.1.3.6. Isolated concrete footings.** In detached one- and two-family dwellings located in Seismic Design Category A, B, or C, that are three stories or less in height, and constructed with stud bearing walls, isolated plain concrete footings supporting columns or pedestals are permitted."

9-1-2R-R403.1.5: SLOPE:
Section R403.1.5 of Chapter 4, Part 2.5 of the CBC is amended and restated as follows:

"**R403.1.5. Slope.** The top surface of footings shall be level. The bottom surface of footings shall not have a slope exceeding 1 unit vertical in 10 units horizontal (10-percent slope). Footings shall be stepped where it is necessary to change the elevation of the top surface of the footings or where the slope of the bottom surface of the footings will exceed 1 unit vertical in 10 units horizontal (10-percent slope). For structures assigned to Seismic Design Categories D_0, D_1 or D_2, stepped

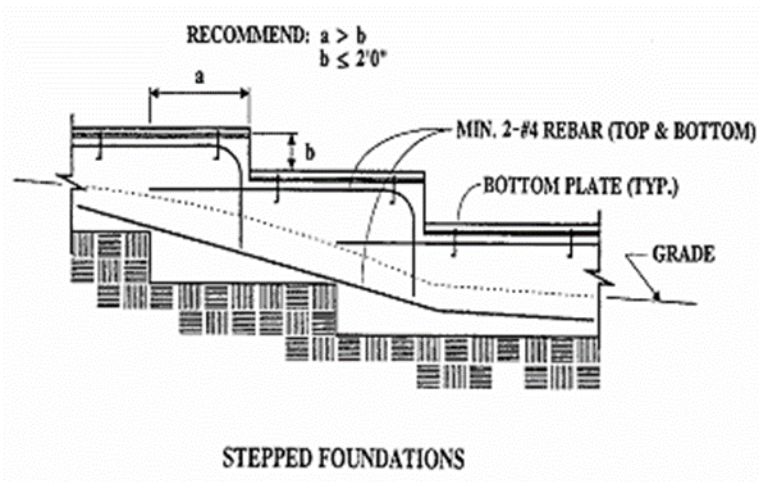

footings shall be reinforced with four No. 4 rebar. Two bars shall be placed at the top and bottom of the footings as shown in Figure R403.1.5.

FIGURE R403.1.5
STEPPED FOOTING"

9-1-2R-R404.2: WOOD FOUNDATION WALLS:
Section R404.2 of Chapter 4, Part 2.5 of the CBC is amended and restated as follows:

"**R404.2 Wood foundation walls.** Wood foundation walls shall be constructed in accordance with the provisions of Sections R404.2.1 through R404.2.6 and with

the details shown in Figures R403.1(2) and R403.1(3). Wood foundation walls shall not be used for structures located in Seismic Design Category D_0, D_1 or D_2."

9-1-2R-R501.1: FLOORS:
Section R501.1 of Chapter 5, Part 2.5 of the CBC is amended and restated as follows:

"**R501.1 Application.** The provisions of this chapter shall control the design and construction of the floors for buildings, including the floors of attic spaces used to house mechanical or plumbing fixtures and equipment. Mechanical or plumbing fixtures and equipment shall be attached or anchored to the structure in accordance with Section 9-1-2R-R301.2.2.11 of the Burbank Municipal Code."

9-1-2R-R503.2.4: OPENINGS IN HORIZONTAL DIAPHRAGMS:

The following section (including Figure R503.2.4) is added to Chapter 5, Part 2.5 of the CBC:

"**R503.2.4 Openings in Horizontal Diaphragms.** Openings in horizontal diaphragms with a dimension perpendicular to the joist that is greater than 4 feet (1.2 m) shall be constructed in accordance with Figure R503.2.4.

1. Blockings shall be provided beyond headers.
2. Metal ties not less than 0.058 inch [1.47 mm (16 galvanized gage)] by 1.5 inches (38 mm) wide with eight 16d common nails on each side of the header-joist intersection. The metal ties shall have a minimum yield of 33,000 psi (227 MPa).
3. Openings in diaphragms shall be further limited in accordance with Section R301.2.2.6.

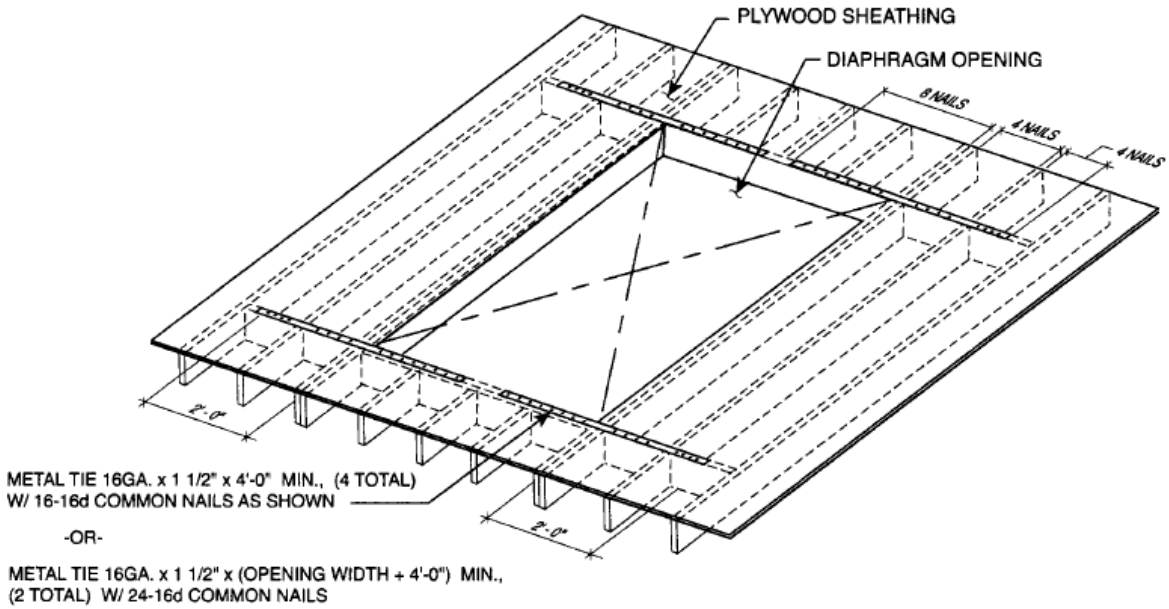

For SI: 1 inch = 25.4 mm, 1 foot = 304.8 mm.

FIGURE R503.2.4
OPENINGS IN HORIZONTAL DIAPHRAGMS"

9-1-2R-R602.3(1): FASTENING SCHEDULE:
The following line items and footnotes within Table R602.3(1) of Chapter 6, Part 2.5 of the CBC are amended and restated as follows:

"TABLE R602.3(1)—continued
FASTENING SCHEDULE

ITEM	DESCRIPTION OF BUILDING ELEMENTS	NUMBER AND TYPE OF FASTENER [a, b, c]	SPACING AND LOCATION	
20 [k]	1″ × 6″ sheathing to each bearing	3-8d box ($2^1/_2$″ × 0.113″); or 2-8d common ($2^1/_2$″ × 0.131″); or 2-10d box (3″ × 0.128″); or 2 staples, 1″ crown, 16 ga., $1^3/_4$″ long	Face nail	
21 [k]	1″ × 8″ and wider sheathing to each bearing	3-8d box ($2^1/_2$″ × 0.113″); or 3-8d common ($2^1/_2$″ × 0.131″); or 3-10d box (3″ × 0.128″); or 3 staples, 1″ crown, 16 ga., $1^3/_4$″ long	Face nail	
		Wider than 1″ × 8″ 4-8d box ($2^1/_2$″ × 0.113″); or 3-8d common ($2^1/_2$″ × 0.131″); or 3-10d box (3″ × 0.128″); or 4 staples, 1″ crown, 16 ga., $1^3/_4$″ long		
Floor				
24 [k]	1″ × 6″ subfloor or less to each joist	3-8d box ($2^1/_2$″ × 0.113″); or 2-8d common ($2^1/_2$″ × 0.131″); or 3-10d box (3″ × 0.128″); or 2 staples, 1″ crown, 16 ga., $1^3/_4$″ long	Face nail	
Other wall sheathing[g]				
34 [k]	$^1/_2$″ structural cellulosic fiberboard sheathing	$1^1/_2$″ x 0.120" galvanized roofing nail, $^7/_{16}$″ head diameter, or $1^1/_4$″ long 16 ga. staple with $^7/_{16}$″ or 1″ crown	3	6
35 [k]	$^{25}/_{32}$″ structural cellulosic fiberboard sheathing	$1^3/_4$″ x 0.120" galvanized roofing nail, $^7/_{16}$″ head diameter, or $1^1/_4$″	3	6

		long 16 ga. staple with $^{7}/_{16}$″ or 1″ crown		
36 k	$^{1}/_{2}$″ gypsum sheathing[d]	11/2” x 0.120” galvanized roofing nail, 7/16” head diameter, or 1¼” long, 16 ga.; staple galvanized, 11/2" long; 7 /16” or 1” crown or 11/4" screws, Type W or S	7	7
37 k	$^{5}/_{8}$″ gypsum sheathing[d]	13/4" x 0.120” galvanized roofing nail, 7/16” head diameter, or 16 ga. staple galvanized, 1 5/8" long; 7 /16” or 1” crown or 1 1/4" screws, Type W or S	7	7

For SI: 1 inch = 25.4 mm, 1 foot = 304.8 mm, 1 mile per hour = 0.447 m/s; 1 ksi = 6.895 MPa.

TABLE R602.3(1) — continued
FASTENING SCHEDULE

k. Use of staples in roof, floor, and braced wall panels shall be prohibited in Seismic Design Category D_0, D_1, or D_2.”

9-1-2R-R602.3.2: TOP PLATE:
The “Exception” to Section R602.3.2, the “Single Top-Plate Splice Connection Details” of Table R602.3.2, and footnote “a” to Table R602.3.2, of Chapter 6, Part 2.5 of the CBC are amended and restated as follows:

“**Exception:** In other than Seismic Design Category D_0, D_1 or D_2, a single top plate used as an alternative to a double top plate shall comply with the following:

1. The single top plate shall be tied at corners, intersecting walls, and at in-line splices in straight wall lines in accordance with Table R602.3.2.
2. The rafters or joists shall be centered over the studs with a tolerance of not more than 1 inch (25 mm).
3. Omission of the top plate is permitted over headers where the headers are adequately tied to adjacent wall sections in accordance with Table R602.3.2.

TABLE R602.3.2
SINGLE TOP-PLATE SPLICE CONNECTION DETAILS

CONDITION	TOP-PLATE SPLICE LOCATION			
	Corners and intersecting walls		Butt joints in straight walls	
	Splice plate size	Minimum nails each side of joint	Splice plate size	Minimum nails each side of joint
Structures in SDC A-C; ~~and in SDC D_0, D_1 and D_2 with braced wall line spacing less than 25 feet~~	3″ × 6″ × 0.036″ galvanized steel plate or equivalent	(6) 8d box ($2^{1}/_{2}$″ × 0.113″) nails	3′ × 12″ × 0.036″ galvanized steel plate or equivalent	(12) 8d box ($2^{1}/_{2}$″ × 0.113″) nails
~~Structures in SDC D_0, D_1 and D_2, with braced wall line spacing greater than or equal to 25 feet~~	~~3″ × 8″ by 0.036″ galvanized steel plate or equivalent~~	~~(9) 8d box ($2^{1}/_{2}$″ × 0.113″) nails~~	~~3′ × 16″ × 0.036″ galvanized steel plate or equivalent~~	~~(18) 8d box ($2^{1}/_{2}$″ × 0.113″) nails~~

For SI: 1 inch = 25.4 mm, 1 foot = 304.8 mm.

a. Staples shall have a minimum crown width of 7/16-inch on diameter except as noted. Use of staples in roof, floor, subfloor, and braced wall panels shall be prohibited in Seismic Design Category D_0, D_1, or D_2."

9-1-2R-R602.10.2.3: MINIMUM NUMBER OF BRACED WALL PANELS:
Section R602.10.2.3 of Chapter 6, Part 2.5 of the CBC is amended and restated as follows:

"**R602.10.2.3 Minimum number of braced wall panels.** Braced wall lines with a length of 16 feet (4877 mm) or less shall have not less than two braced wall panels of any length or one braced wall panel equal to 48 inches (1219 mm) or more. Braced wall lines greater than 16 feet (4877 mm) shall have not less than two braced wall panels. No braced wall panel shall be less than 48 inches in length in Seismic Design Category D_0, D_1, or D_2."

9-1-2R-R602.10.3: TABLE R602.10.3(3):
Table R602.10.3(3) of Chapter 6, Part 2.5 of the CBC is amended and restated as follows:
“

TABLE R602.10.3(3)
BRACING REQUIREMENTS BASED ON SEISMIC DESIGN CATEGORY

• WALL HEIGHT = 10 FEET • 10 PSF FLOOR DEAD LOAD • 15 PSF ROOF/CEILING DEAD LOAD • BRACED WALL LINE SPACING ≤ 25 FEET			MINIMUM TOTAL LENGTH (FEET) OF BRACED WALL PANELS REQUIRED ALONG EACH BRACED WALL LINE[a, j]				
Seismic Design Category[h]	Story Location	Braced Wall Line Length (feet)[c]	Method LIB[d]	Method GB[e]	Methods DWB, SFB, PBS, PCP, HPS, CS-SFB[g]	Methods WSP, ABW[f], PFH[f] and PFG[a, f]	Methods CS-WSP, CS-G, CS-PF
C (townhouses only)		10	2.5	2.5	2.5	1.6	1.4
		20	5.0	5.0	5.0	3.2	2.7
		30	7.5	7.5	7.5	4.8	4.1
		40	10.0	10.0	10.0	6.4	5.4
		50	12.5	12.5	12.5	8.0	6.8
	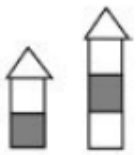	10	NP	4.5	4.5	3.0	2.6
		20	NP	9.0	9.0	6.0	5.1
		30	NP	13.5	13.5	9.0	7.7
		40	NP	18.0	18.0	12.0	10.2
		50	NP	22.5	22.5	15.0	12.8
		10	NP	6.0	6.0	4.5	3.8
		20	NP	12.0	12.0	9.0	7.7
		30	NP	18.0	18.0	13.5	11.5
		40	NP	24.0	24.0	18.0	15.3
		50	NP	30.0	30.0	22.5	19.1
D_0	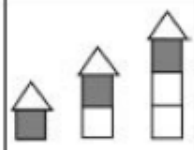	10	NP	~~2.8~~ 5.6	~~2.8~~ 5.6	1.8	1.6
		20	NP	~~5.5~~ 11.0	~~5.5~~ 11.0	3.6	3.1
		30	NP	~~8.3~~ 16.6	~~8.3~~ 16.6	5.4	4.6
		40	NP	~~11.0~~ 22.0	~~11.0~~ 22.0	7.2	6.1
		50	NP	~~13.8~~ 27.6	~~13.8~~ 27.6	9.0	7.7
	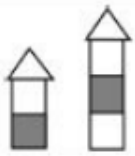	10	NP	~~5.3~~ NP	~~5.3~~ NP	3.8	3.2
		20	NP	~~10.5~~ NP	~~10.5~~ NP	7.5	6.4
		30	NP	~~15.8~~ NP	~~15.8~~ NP	11.3	9.6
		40	NP	~~21.0~~ NP	~~21.0~~ NP	15.0	12.8
		50	NP	~~26.3~~ NP	~~26.3~~ NP	18.8	16.0
		10	NP	~~7.3~~ NP	~~7.3~~ NP	5.3	4.5
		20	NP	~~14.5~~ NP	~~14.5~~ NP	10.5	9.0
		30	NP	~~21.8~~ NP	~~21.8~~ NP	15.8	13.4
		40	NP	~~29.0~~ NP	~~29.0~~ NP	21.0	17.9
		50	NP	~~36.3~~ NP	~~36.3~~ NP	26.3	22.3

(continued)

TABLE R602.10.3(3)—continued
BRACING REQUIREMENTS BASED ON SEISMIC DESIGN CATEGORY

• WALL HEIGHT = 10 FEET • 10 PSF FLOOR DEAD LOAD • 15 PSF ROOF/CEILING DEAD LOAD • BRACED WALL LINE SPACING ≤ 25 FEET			MINIMUM TOTAL LENGTH (FEET) OF BRACED WALL PANELS REQUIRED ALONG EACH BRACED WALL LINE[a, b]				
Seismic Design Category[b]	Story Location	Braced Wall Line Length (feet)[c]	Method LIB[d]	Method[d] GB	Methods DWB, SFB, PBS, PCP, HPS, CS-SFB[e]	Methods WSP, ABW[f], PFH[f] and PFG[e, f]	Methods CS-WSP, CS-G, CS-PF
D_1		10	NP	~~3.0~~ 6.0	~~3.0~~ 6.0	2.0	1.7
		20	NP	~~6.0~~ 12.0	~~6.0~~ 12.0	4.0	3.4
		30	NP	~~9.0~~ 18.0	~~9.0~~ 18.0	6.0	5.1
		40	NP	~~12.0~~ 24.0	~~12.0~~ 24.0	8.0	6.8
		50	NP	~~15.0~~ 30.0	~~15.0~~ 30.0	10.0	8.5
	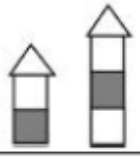	10	NP	~~6.0~~ NP	~~6.0~~ NP	4.5	3.8
		20	NP	~~12.0~~ NP	~~12.0~~ NP	9.0	7.7
		30	NP	~~18.0~~ NP	~~18.0~~ NP	13.5	11.5
		40	NP	~~24.0~~ NP	~~24.0~~ NP	18.0	15.3
		50	NP	~~30.0~~ NP	~~30.0~~ NP	22.5	19.1
		10	NP	~~8.5~~ NP	~~8.5~~ NP	6.0	5.1
		20	NP	~~17.0~~ NP	~~17.0~~ NP	12.0	10.2
		30	NP	~~25.5~~ NP	~~25.5~~ NP	18.0	15.3
		40	NP	~~34.0~~ NP	~~34.0~~ NP	24.0	20.4
		50	NP	~~42.5~~ NP	~~42.5~~ NP	30.0	25.5
D_2[b]		10	NP	~~4.0~~ 8.0	~~4.0~~ 8.0	2.5	2.1
		20	NP	~~8.0~~ 16.0	~~8.0~~ 16.0	5.0	4.3
		30	NP	~~12.0~~ 24.0	~~12.0~~ 24.0	7.5	6.4
		40	NP	~~16.0~~ 32.0	~~16.0~~ 32.0	10.0	8.5
		50	NP	~~20.0~~ 40.0	~~20.0~~ 40.0	12.5	10.6
		10	NP	~~7.5~~ NP	~~7.5~~ NP	5.5	4.7
		20	NP	~~15.0~~ NP	~~15.0~~ NP	11.0	9.4
		30	NP	~~22.5~~ NP	~~22.5~~ NP	16.5	14.0
		40	NP	~~30.0~~ NP	~~30.0~~ NP	22.0	18.7
		50	NP	~~37.5~~ NP	~~37.5~~ NP	27.5	23.4
	Three-story dwelling	10	NP	NP	NP	NP	NP
		20	NP	NP	NP	NP	NP
		30	NP	NP	NP	NP	NP
		40	NP	NP	NP	NP	NP
		50	NP	NP	NP	NP	NP
	Cripple wall below one- or two-story dwelling	10	NP	NP	NP	7.5	6.4
		20	NP	NP	NP	15.0	12.8
		30	NP	NP	NP	22.5	19.1
		40	NP	NP	NP	30.0	25.5
		50	NP	NP	NP	37.5	31.9

(continued)

a. Linear interpolation shall be permitted.

b. Interpolation of bracing length between the S_{ds} values associated with the seismic design categories shall be permitted when a site-specific S_{ds} value is determined in accordance with Section 1613.2 of the California Building Code.

c. Where the braced wall line length is greater than 50 feet, braced wall lines shall be permitted to be divided into shorter segments having lengths of 50 feet or less, and the amount of bracing within each segment shall be in accordance with this table.

d. Method LIB shall have gypsum board fastened to not less than one side with nails or screws

in accordance with Table R602.3(1) for exterior sheathing or Table R702.3.5 for interior gypsum board. Spacing of fasteners at panel edges shall not exceed 8 inches.

e. Methods PFG and CS-SFB do not apply in Seismic Design Categories D_0, D_1 and D_2.

f. Methods PFH, PFG and ABW are only permitted on a single story or a first of two stories.

g. Where more than one bracing method is used, mixing methods shall be in accordance with Section R602.10.4.1.

h. One- and two- family dwellings in Seismic Design Category D_2 exceeding two stories shall be designed in accordance with accepted engineering practice.

i. Methods GB and PCP braced wall panel h/w ratio shall not exceed 1:1 in SDC D_0, D_1 and D_2. Methods DWB, SFB, PBS, HPS, and CS-SFB are not permitted in D_0, D_1 and D_2.

9-1-2R-R602.10.4: BRACING METHODS:
Table R602.10.4 of Chapter 6, Part 2.5 of the CBC is amended and restated as follows:
“

TABLE R602.10.4
BRACING METHODS [f]

METHODS, MATERIAL		MINIMUM THICKNESS	FIGURE	CONNECTION CRITERIA[a]	
				Fasteners	Spacing
Intermittent Bracing Methods	**LIB** Let-in-bracing	1 × 4 wood or approved metal straps at 45° to 60° angles for maximum 16″ stud spacing		Wood: 2-8d common nails or 3-8d ($2^1/_2$″ long x 0.113″ dia.) nails	Wood: per stud and top and bottom plates
				Metal strap: per manufacturer	Metal: per manufacturer
	DWB Diagonal wood boards	$^3/_4$″ (1″ nominal) for maximum 24″ stud spacing		2-8d ($2^1/_2$″ long × 0.113″ dia.) nails or 2 - $1^3/_4$″ long staples	Per stud
	WSP Wood structural panel (See Section R604)	~~$^3/_8$″~~ 15/32″	8d common (2 1/2″x0.131) nails 3/8″ ~~edge distance to panel edge~~	~~Exterior sheathing per Table R602.3(3)~~	6″ edges 12″ field
			8d common (2 1/2″x0.131) nails 3/8″ edge distance to panel edge	~~Interior sheathing per Table R602.3(1) or R602.3(2)~~	~~Varies by fastener~~ 6″ edges 12″ field
	BV-WSP[e] Wood structural panels with stone or masonry veneer (See Section R602.10.6.5)	$^7/_{16}$″	See Figure R602.10.6.5	8d common ($2^1/_2$″ × 0.131) nails	4″ at panel edges 12″ at intermediate supports 4″ at braced wall panel end posts
	SFB Structural fiberboard sheathing	$^1/_2$″ or $^{25}/_{32}$″ for maximum 16″ stud spacing		$1^1/_2$″ long × 0.12″ dia. (for $^1/_2$″ thick sheathing) $1^3/_4$″ long × 0.12″ dia. (for $^{25}/_{32}$″ thick sheathing) galvanized roofing nails	3″ edges 6″ field
	GB Gypsum board	$^1/_2$″		Nails or screws per Table R602.3(1) for exterior locations	For all braced wall panel locations: 7″ edges (including top and bottom plates) 7″ field
				Nails or screws per Table R702.3.5 for interior locations	
	PBS Particleboard sheathing (See Section R605)	$^3/_8$″ or $^1/_2$″ for maximum 16″ stud spacing		For $^3/_8$″, 6d common (2″ long × 0.113″ dia.) nails For $^1/_2$″, 8d common ($2^1/_2$″ long × 0.131″ dia.) nails	3″ edges 6″ field
	PCP Portland cement plaster	See Section R703.7 for maximum 16″ stud spacing		$1^1/_2$″ long, 11 gage, $^7/_{16}$″ dia. head nails or $^7/_8$″ long, 16 gage staples [g]	6″ o.c. on all framing members
	HPS Hardboard panel siding	$^7/_{16}$″ for maximum 16″ stud spacing		0.092″ dia., 0.225″ dia. head nails with length to accommodate $1^1/_2$″ penetration into studs	4″ edges 8″ field
	ABW Alternate braced wall	$^3/_8$″		See Section R602.10.6.1	See Section R602.10.6.1

(continued)

TABLE R602.10.4—continued
BRACING METHODS [f]

METHODS, MATERIAL		MINIMUM THICKNESS	FIGURE	CONNECTION CRITERIA[a]	
				Fasteners	Spacing
Intermittent Bracing Methods	**PFH** Portal frame with hold-downs	$^{3}/_{8}$"		See Section R602.10.6.2	See Section R602.10.6.2
	PFG Portal frame at garage	$^{7}/_{16}$"		See Section R602.10.6.3	See Section R602.10.6.3
Continuous Sheathing Methods	**CS-WSP** Continuously sheathed wood structural panel	~~$^{3}/_{8}$"~~ 15/32"	8d common (2 1/2"x0.131) nails 3/8" edge distance to panel edge	~~Exterior sheathing per Table R602.3(3)~~	6" edges 12" field
			8d common (2 1/2"x0.131) nails 3/8" edge distance to panel edge	~~Interior sheathing per Table R602.3(1) or R602.3(2)~~	~~Varies by fastener~~ 6" edges 12" field
	CS-G[b, c] Continuously sheathed wood structural panel adjacent to garage openings	~~$^{3}/_{8}$"~~ 15/32"		See Method CS-WSP	See Method CS-WSP
	CS-PF Continuously sheathed portal frame	~~$^{7}/_{16}$"~~ 15/32"		See Section R602.10.6.4	See Section R602.10.6.4
	CS-SFB[d] [f] Continuously sheathed structural fiberboard	$^{1}/_{2}$" or $^{25}/_{32}$" for maximum 16" stud spacing		$1^{1}/_{2}$" long × 0.12" dia. (for $^{1}/_{2}$" thick sheathing) $1^{3}/_{4}$" long × 0.12" dia. (for $^{25}/_{32}$" thick sheathing) galvanized roofing nails	3" edges 6" field

For SI: 1 inch = 25.4 mm, 1 foot = 304.8 mm, 1 degree = 0.0175 rad, 1 pound per square foot = 47.8 N/m^2, 1 mile per hour = 0.447 m/s.

a. Adhesive attachment of wall sheathing, including Method GB, shall not be permitted in Seismic Design Categories C, D_0, D_1 and D_2.

b. Applies to panels next to garage door opening where supporting gable end wall or roof load only. Shall only be used on one wall of the garage. In Seismic Design Categories D_0, D_1 and D_2, roof covering dead load shall not exceed 3 psf.

c. Garage openings adjacent to a Method CS-G panel shall be provided with a header in accordance with Table R602.5(1). A full-height clear opening shall not be permitted adjacent to a Method CS-G panel.

d. Method CS-SFB does not apply in Seismic Design Categories D_0, D_1 and D_2.

e. Method applies to detached one- and two-family dwellings in Seismic Design Categories D_0 through D_2 only.

f. Methods GB and PCP braced wall panel h/w ratio shall not exceed 1:1 in SDC D_0, D_1, or D_2. Methods LIB, DWB, SFB, PBS, HPS, and PFG are not permitted in SDC D_0, D_1, or D_2.

g. Use of staples in braced wall panels shall be prohibited in SDC D_0, D_1, or D_2.

”

9-1-2R-R602.10.5: MINIMUM LENGTH OF BRACED WALL PANELS:
Table R602.10.5 of Chapter 6, Part 2.5 of the CBC is amended and restated as follows:

"TABLE R602.10.5 – MINIMUM LENGTH OF BRACED WALL PANELS

ETHOD (See Table R602.10.4)		MINIMUM LENGTH[a] (inches)					CONTRIBUTING LENGTH (inches)
		Wall Height					
		8 feet	9 feet	10 feet	11 feet	12 feet	
DWB, WSP, SFB, PBS, PCP, HPS, BV-WSP		48	48	48	53	58	Actual[b]
GB		48	48	48	53	58	Double sided = Actual Single sided = 0.5 × Actual
LIB		55	62	69	NP	NP	Actual[b]
ABW	SDC A, B and C, ultimate design wind speed < 140 mph	28	32	34	38	42	48
	SDC D_0, D_1 and D_2, ultimate design wind speed < 140 mph	32	32	34	NP	NP	
CS-G		24	27	30	33	36	Actual[b]
CS-WSP, CS-SFB	Adjacent clear opening height (inches)						
	≤ 64	24	27	30	33	36	Actual[b]
	68	26	27	30	33	36	
	72	27	27	30	33	36	
	76	30	29	30	33	36	
	80	32	30	30	33	36	
	84	35	32	32	33	36	
	88	38	35	33	33	36	
	92	43	37	35	35	36	
	96	48	41	38	36	36	
	100	—	44	40	38	38	
	104	—	49	43	40	39	
	108	—	54	46	43	41	
	112	—	—	50	45	43	
	116	—	—	55	48	45	
	120	—	—	60	52	48	
	124	—	—	—	56	51	
	128	—	—	—	61	54	
	132	—	—	—	66	58	
	136	—	—	—	—	62	
	140	—	—	—	—	66	
	144	—	—	—	—	72	
METHOD (See Table R602.10.4)		Portal header height					
		8 feet	9 feet	10 feet	11 feet	12 feet	
PFH	Supporting roof only	~~16~~ 24	~~16~~ 24	~~16~~ 24	Note c	Note c	48
	Supporting one story and roof	24	24	24	Note c	Note c	
PFG		24	27	30	Note d	Note d	1.5 × Actual[b]
CS-PF	SDC A, B and C	16	18	20	Note e	Note e	1.5 × Actual[b]
	SDC D_0, D_1 and D_2	~~16~~ 24	~~18~~ 24	~~20~~ 24	Note e	Note e	Actual[b]

For SI: 1 inch = 25.4 mm, 1 foot = 304.8 mm, 1 mile per hour = 0.447 m/s.

NP = Not Permitted.

a. Linear interpolation shall be permitted.
b. Use the actual length where it is greater than or equal to the minimum length.
c. Maximum header height for PFH is 10 feet in accordance with Figure R602.10.6.2, but wall height shall be permitted to be increased to 12 feet with pony wall.
d. Maximum header height for PFG is 10 feet in accordance with Figure R602.10.6.3, but wall height shall be permitted to be increased to 12 feet with pony wall.
e. Maximum header height for CS-PF is 10 feet in accordance with Figure R602.10.6.4, but wall height shall be permitted to be increased to 12 feet with pony wall."

9-1-2R-R602.10.6.1: METHOD ABW:
Figure R602.10.6.1 of Chapter 6, Part 2.5 of the CBC is amended and restated as follows:
"

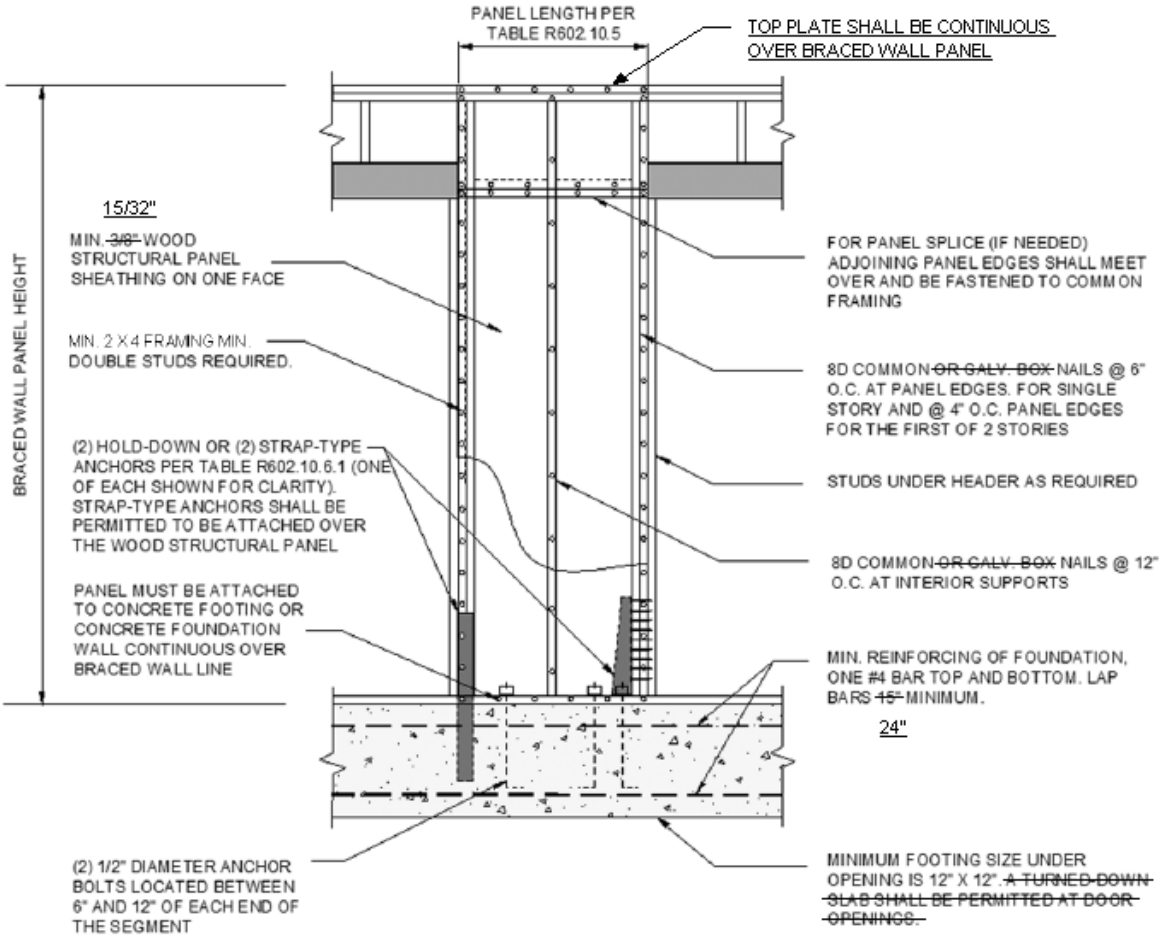

FIGURE R602.10.6.1
METHOD ABW—ALTERNATE BRACED WALL PANEL

"

9-1-2R-R602.10.6.2: METHOD PFH:
Figure R602.10.6.2 of Chapter 6, Part 2.5 of the CBC is amended and restated as follows:
“

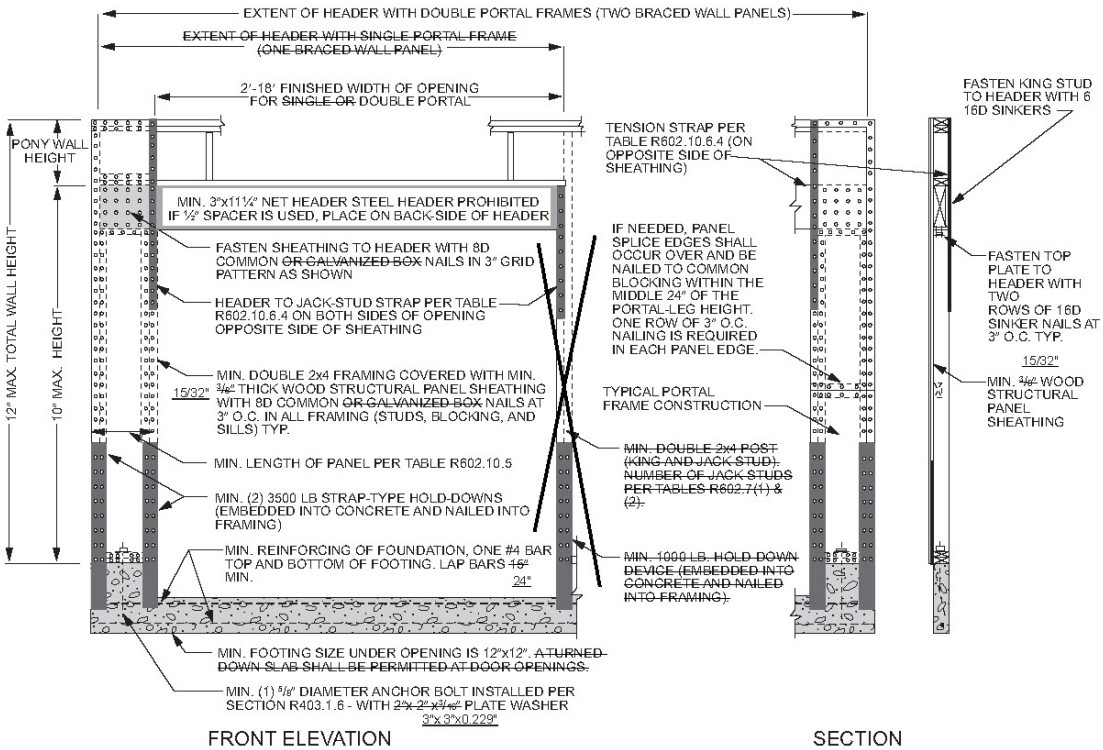

For SI: 1 inch = 25.4 mm, 1 foot = 304.8 mm.

FIGURE R602.10.6.2
METHOD PFH—PORTAL FRAME WITH HOLD-DOWNS
AT DETACHED GARAGE DOOR OPENINGS

9-1-2R-R602.10.6.4: METHOD CS-PF:
Figure R602.10.6.4 of Chapter 6, Part 2.5 of the CBC is amended and restated as follows:
“

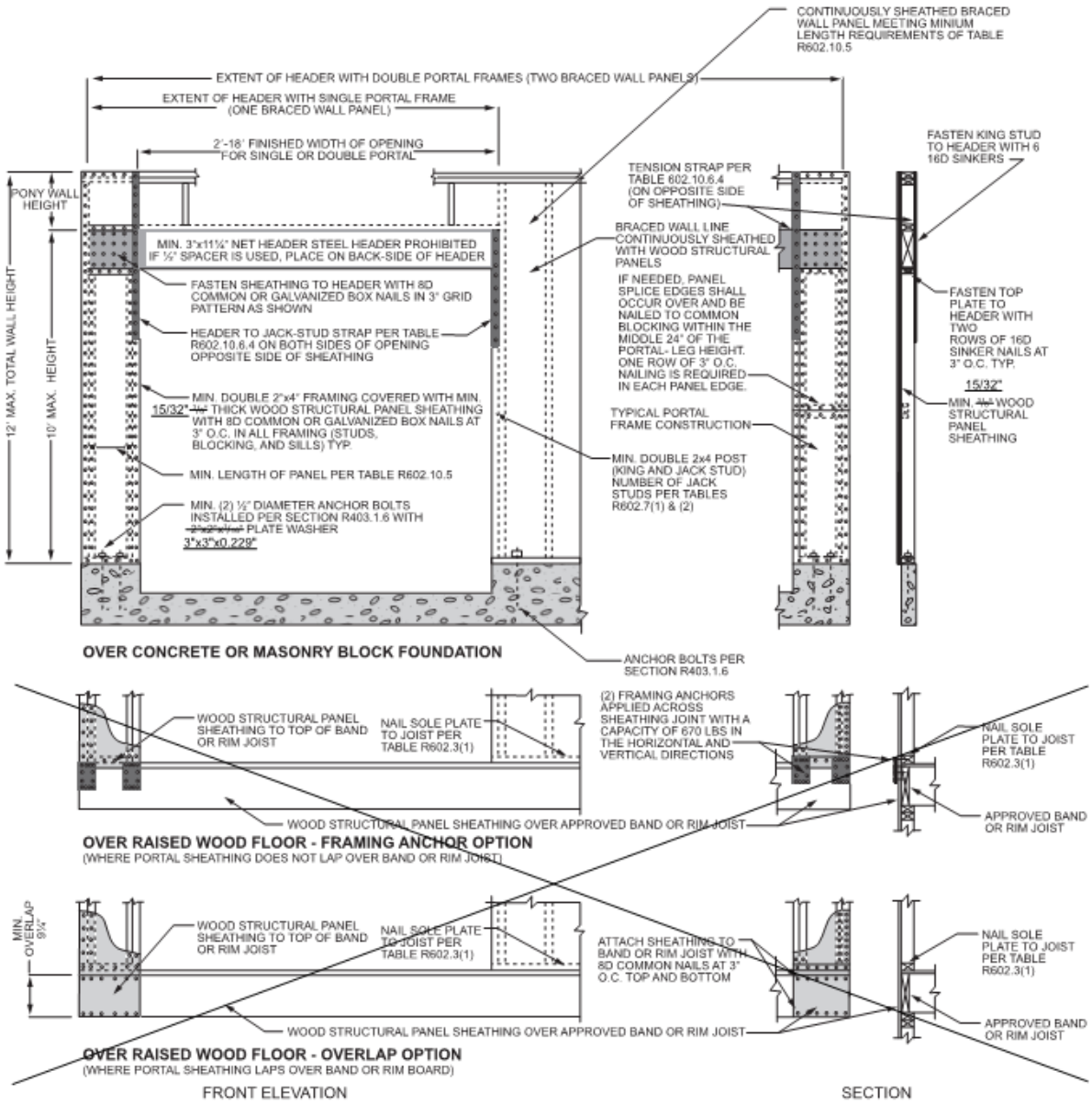

For SI: 1 inch = 25.4 mm, 1 foot = 304.8 mm.

FIGURE R602.10.6.4
METHOD CS-PF—CONTINUOUSLY SHEATHED PORTAL FRAME PANEL CONSTRUCTION

”

9-1-2R-R606.12.2.2.3: REINFORCEMENT REQUIREMENTS FOR MASONRY ELEMENTS:
Section R606.12.2.2.3 of Chapter 6, Part 2.5 of the CBC is amended and restated as follows:

"**R606.12.2.2.3 Reinforcement requirements for masonry elements.** Masonry elements listed in Section R606.12.2.2.2 shall be reinforced in either the horizontal or vertical direction as shown in Figure R606.11(2) and in accordance with the following:

1. Horizontal reinforcement. Horizontal joint reinforcement shall consist of at least one No. 4 bar spaced not more than 48 inches (1219 mm). Horizontal reinforcement shall be provided within 16 inches (406 mm) of the top and bottom of these masonry elements.
2. Vertical reinforcement. Vertical reinforcement shall consist of at least one No. 4 bar spaced not more than 48 inches (1219 mm). Vertical reinforcement shall be within 8 inches (203 mm) of the ends of masonry walls."

9-1-2R-R703.6: WOOD SHAKES AND SHINGLES:
Section R703.6 (including R703.6.1, R703.6.2, and R703.6.3) of Chapter 7, Part 2.5 of the CBC is deleted in its entirety and replaced with the following:

"**R703.6.1 Wood shakes and shingles.**
No wood shakes or wood shingles shall be installed as an exterior wall covering on any new or existing building or structure. No wood board, hardboard, or engineered wood siding, pressure-treated wood, intumescent paints, and other protective coatings shall be installed as an exterior wall covering on any new or existing building or structure in the Burbank Fire Hazard Severity Zones.

EXCEPTIONS: The following types of siding may be used:
1. Fiber-Cement siding with a Class A fire rating.
2. Vinyl siding with a Class A fire rating. Such vinyl siding shall be installed over one layer of Type X gypsum board with a minimum thickness of 1/2".
3. Alternate siding materials may be approved by the Building Official and Fire Chief in accordance with Section 104.11 of the California Building Code.

R703.6.2 Existing Wood Exterior Repairs.
Burbank Municipal Code Section 9-1-2R-R703.6.1 shall not apply:

1. When an existing building or structure with a wood exterior wall covering is subject to wood shake or wood shingle installation, addition, repair, alteration or replacement of less than 25 percent of the existing building or structure's wood exterior wall covering area over the life of the building commencing on or

after the effective date of this ordinance, as long as that existing building or structure with a wood exterior wall covering is located outside of the Burbank Fire Hazard Severity Zones. No exterior repairs or installations shall be allowed in the Burbank Fire Hazard Severity Zones.

2. When an existing building or structure with a wood exterior wall covering is subject to wood shake or wood shingle installation, addition, repair, alteration or replacement of 25 percent or more of the existing building or structure's wood exterior wall covering area over the life of the building commencing on or after the effective date of this ordinance, as long as that existing building or structure with a wood exterior wall covering is located outside of the Burbank Fire Hazard Severity Zones. In such circumstances, if the building or structure is located in a commercial or industrial zone, pressure-treated wood shakes or pressure-treated wood shingles with a Class B rating shall be used with a one-hour wall and in all other areas of the City, pressure-treated wood shakes or pressure-treated wood shingles with a Class C rating shall be used with a one-hour wall. For the purposes of this ordinance, 25 percent of the area of wood exterior wall covering shall be calculated from the area of the wood exterior wall covering existing on the effective date of this ordinance. No wood exterior repairs or installations shall be allowed in the Burbank Fire Hazard Severity Zones."

9-1-2R-R803.2.4: OPENINGS IN HORIZONTAL DIAPHRAGMS.
The following section is added to Chapter 8, Part 2.5 of the CBC:

"**R803.2.4 Openings in horizontal diaphragms**. Openings in horizontal diaphragms shall conform with Section R503.2.4."

9-1-2R-R806.5: UNVENTED ATTIC AND UNVENTED ENCLOSED RAFTER ASSEMBLIES:
Subsection 3 of Section R806.5 of Chapter 8, Part 2.5 of the CBC is amended and restated as follows:

"3. No wood roof covering shall be installed on any new or existing building or structure."

9-1-2R-R902.2: FIRE-RETARDANT-TREATED SHINGLES AND SHAKES:
Section R902.2 of Chapter 9, Part 2.5 of the CBC is amended and restated as follows:

"**R902.2 Fire-retardant-treated shingles and shakes.** No wood roof covering shall be installed on any new or existing building or structure."

9-1-2R-R905.7: WOOD SHINGLES:
Section R905.7 of Chapter 9, Part 2.5 of the CBC is amended and restated as follows:

"**R905.7 Wood shingles.** No wood roof covering shall be installed on any new or existing building or structure."

9-1-2R-R905.8: WOOD SHAKES:
Section R905.8 of Chapter 9, Part 2.5 of the CBC is amended and restated as follows:

> "**R905.8 Wood shakes.** No wood roof covering shall be installed on any new or existing building or structure."

9-1-2R-R908.4: ROOF RECOVER:
Subsection 3 of Section R908.4 of Chapter 9, Part 2.5 of the CBC is not adopted.

Section R908.4, Exception 2 of Chapter 9, Part 2.5 of the CBC is amended and restated as follows:

> "2. Where the existing roof covering is slate, clay, cement, asbestos-cement tile, wood shake or wood shingle."

9-1-2R-R908.4.1: ROOF RECOVERING OVER WOOD SHINGLES OR SHAKES:
Section R908.4.1 of Chapter 9, Part 2.5 of the CBC is amended and restated as follows:

> "**R908.4.1 Roof recovering over wood shingles or shakes.** No roof covering shall be applied over existing wood shakes or wood shingles. When a roof has two or more layers of roof covering, any of which is wood shake or wood shingle, all layers shall be completely removed before applying a new roof covering. Existing roof recovering over wood shakes or wood shingles shall be removed and replaced no later than August 14, 2020."

ARTICLE 3. CALIFORNIA ELECTRICAL CODE

9-1-3: ADOPTION OF 2025 CALIFORNIA ELECTRICAL CODE:
Part 3 of Title 24 of the California Code of Regulations, also known as the "California Electrical Code," which is part of the California Building Standards Code, 2025 Edition, together with Annexes C and I, as adopted by the California Building Standards Commission and the National Fire Protection Association is hereby adopted without local amendments, by the City of Burbank and made a part of this Code.

9-1-3-80.97: ELECTRIC VEHICLE CHARGING STATION EXPEDITED REVIEW PROCESS:

A. PURPOSE.
The purpose of this Ordinance is to promote and encourage the use of electric vehicles by creating an expedited, streamlined permitting process for electric vehicle charging stations while promoting public health and safety and preventing specific adverse impacts in the installation and use of such charging stations. This Ordinance is also purposed to comply with California Government Code Section 65850.7.

B. DEFINITIONS.

The following words and phrases as used in this section are defined as follows:

(1) "Electric vehicle charging station" or "charging station" means any level of electric vehicle supply equipment station that is designed and built in compliance with Article 625 of the California Electrical Code, as it reads on the effective date of this Chapter, and delivers electricity from a source outside an electric vehicle into a plug-in electric vehicle.

(2) "Specific, adverse impact" means a significant, quantifiable, direct, and unavoidable impact, based on objective, identified, and written public health or safety standards, policies, or conditions as they existed on the date of the application was deemed complete.

(3) "Electronic submittal" means the utilization of one or more of the following:

a. e-mail

b. the internet

C. EXPEDITED PERMITTING PROCESS.

Section 65850.7 of the California Government Code provides that in developing an expedited permitting process, the City shall adopt a checklist of all requirements with which electric vehicle charging stations shall comply to be eligible for expedited review. The Building Official is hereby authorized and directed to develop and adopt such checklist. The expedited, streamlined permitting process and checklist incorporates the recommendations contained in the most current version (which may change from time to time) of the "Plug-In Electric Vehicle Infrastructure Permitting Checklist" of the "Zero-Emission Vehicles in California: Community Readiness Guidebook" as published by the Governor's Office of Planning and Research. The checklist shall be published on the City's website.

D. PERMIT APPLICATION PROCESSING.

1. As part of the permit application submittal, the applicant shall verify that the installation of an electric vehicle charging station will not have specific, adverse impact to public health and safety and building occupants. Verification by the applicant includes but is not limited to: electrical system capacity and loads; electrical system wiring, bonding and overcurrent protection; building infrastructure affected by charging station equipment and associated conduits; areas of charging station equipment and vehicle parking.
2. The application shall demonstrate compliance with Burbank Water and Power's (BWP) interconnection policies.
3. A permit application that satisfies the information requirements in the City's adopted checklist shall be deemed complete and be promptly processed. Upon confirmation by the Building Official that the permit application and supporting documents meets the requirements of the City adopted checklist; is consistent with all applicable laws and health and safety standards; and demonstrates compliance with BWP's interconnection policies, then the Building Official shall, consistent with Government Code Section 65850.7, approve the application and issue all necessary non-discretionary permits. Such approval does not

authorize an applicant to energize or utilize the electric vehicle charging station until approval is granted by BWP. If the Building Official determines that the permit application is incomplete, he or she shall issue a written correction notice to the applicant, detailing all deficiencies in the application and any additional information required to be eligible for expedited permit issuance.

4. Consistent with Government Code Section 65850.7, the Building Official shall allow for electronic submittal of permit applications covered by this ordinance and associated supporting documentations. In accepting such permit applications, the Building Official shall also accept electronic signatures on all forms, applications, and other documentation in lieu of a wet signature by any applicant.

E. TECHNICAL REVIEW.

1. It is the intent of this ordinance to encourage the installation of electric vehicle charging stations by removing obstacles to permitting for charging stations so long as the action does not supersede the Building Official's authority to address higher priority life-safety situations. If the Building Official makes a finding based on substantial evidence that the electric vehicle charging station could have a specific adverse impact upon the public health or safety, as defined in this section, the City may require the applicant to apply for a use permit. A decision affecting review of the use permit is appealable to the Community Development Director. A decision by the Community Development Director may be appealed to the Planning Board.
2. In technical review of a charging station, consistent with Government Code Section 65850.7, the Building Official shall not condition the approval for any electric vehicle charging station permit on the approval of such a system by an association, as that term is defined by Civil Code Section 4080.

F. ELECTRIC VEHICLE CHARGING STATION INSTALLATION REQUIREMENTS.

1. Electric vehicle charging station equipment shall meet the requirements of the California Electrical Code, the Society of Automotive Engineers, the National Electrical Manufacturers Association, and accredited testing laboratories such as Underwriters Laboratories, and where applicable, rules of the Public Utilities Commission or BWP regarding safety and reliability.
2. Installation of electric vehicle charging stations and associated wiring, bonding, disconnecting means and overcurrent protective devices shall meet the requirements of Article 625 and all applicable provisions of the California Electrical Code.
3. Installation of electric vehicle charging stations shall be incorporated into the load calculations of all new or existing electrical services and shall meet the requirements of the California Electrical Code. Electric vehicle charging equipment shall be considered a continuous load.
4. Anchorage of either floor-mounted or wall-mounted electric vehicle charging stations shall meet the requirements of the California Building or Residential

Code as applicable per occupancy, and the provisions of the manufacturer's installation instructions. Mounting of charging stations shall not adversely affect building elements.

9-1-3-80.99: SMALL RESIDENTIAL ROOFTOP SOLAR ENERGY SYSTEM REVIEW PROCESS:

A. The following words and phrases as used in this section are defined as follows:
"Electronic submittal" means the utilization of one or more of the following:
1. e-mail
2. the internet

"Small residential rooftop solar energy system" means all of the following:
1. A solar energy system that is no larger than 10 kilowatts alternating current nameplate rating or 30 kilowatts thermal.
2. A solar energy system that conforms to all applicable state fire, structural, electrical, and other building codes as adopted or amended by the City and paragraph (3) of subdivision (c) of Section 714 of the Civil Code, as such section or subdivision may be amended, renumbered, or redesignated from time to time.
3. A solar energy system that is installed on a single or duplex family dwelling.
4. A solar panel or module array that does not exceed the maximum legal building height as defined by the authority having jurisdiction.

"Solar energy system" has the same meaning set forth in paragraphs (1) and (2) of subdivision (a) of Section 801.5 of the Civil Code, as such section or subdivision may be amended, renumbered, or redesignated from time to time, but shall mean until that time either of the following:
1. Any solar collector or other solar energy device whose primary purpose is to provide for the collection, storage, and distribution of solar energy for space heating, space cooling, electric generation, or water heating.
2. Any structural design feature of a building, whose primary purpose is to provide for the collection, storage, and distribution of solar energy for electricity generation, space heating or cooling, or for water heating.

B. Section 65850.5 of the California Government Code provides that in developing an expedited permitting process, the city shall adopt a checklist of all requirements with which small rooftop solar energy systems shall comply to be eligible for expedited review. The Building Official is hereby authorized and directed to develop and adopt such checklist.

C. The checklist shall be published on the City's internet website. The applicant may submit the permit application and associated documentation to the City's Building Division by personal or electronic submittal together with any required permit processing and inspection fees. In the case of electronic submittal, the electronic signature of the applicant on all forms, applications and other documentation may be used in lieu of a wet signature.

D. Prior to submitting an application, the applicant shall:

1. Verify to the applicant's reasonable satisfaction through the use of standard engineering evaluation techniques that the support structure for the small residential rooftop solar energy system is stable and adequate to transfer all wind, seismic, and dead and live loads associated with the system to the building foundation; and
2. At the applicant's cost, verify to the applicant's reasonable satisfaction using standard electrical inspection techniques that the existing electrical system including existing line, load, ground and bonding wiring as well as main panel and subpanel sizes are adequately sized, based on the existing electrical system's current use, to carry all new photovoltaic electrical loads.

E. For a small residential rooftop solar energy system eligible for expedited review, only one inspection shall be required, which shall be done in a timely manner and may include a consolidated inspection by the Building Official and a Fire Official. If a small residential rooftop solar energy system fails inspection, a subsequent inspection is authorized; however, the subsequent inspection need not conform to the requirements of this subsection.

F. An application that satisfies the information requirements in the checklist, as determined by the Building Official, shall be deemed complete. Upon receipt of an incomplete application, the Building Official shall issue a written correction notice detailing all deficiencies in the application and any additional information required to be eligible for expedited permit issuance.

G. Upon confirmation by the Building Official of the application and supporting documentation being complete and meeting the requirements of the checklist, the Building Official shall administratively approve the application and issue all required permits or authorizations. Such approval does not authorize an applicant to connect the small residential rooftop energy system to the Burbank Water and Power Department's electricity grid. The applicant is responsible for obtaining such approval or permission from the Burbank Water and Power Department.

ARTICLE 4. CALIFORNIA MECHANICAL CODE

9-1-4: ADOPTION OF 2025 CALIFORNIA MECHANICAL CODE:

Part 4 of Title 24 of the California Code of Regulations, also known as the “California Mechanical Code,” which is part of the California Building Standards Code, 2025 Edition, as adopted by the California Building Standards Commission and the International Association of Mechanical and Plumbing Officials is hereby adopted without local amendments, by the City of Burbank and made a part of this Code.

ARTICLE 5. CALIFORNIA PLUMBING CODE

9-1-5: ADOPTION OF 2025 CALIFORNIA PLUMBING CODE:
Part 5 of Title 24 of the California Code of Regulations, also known as the “California Plumbing Code,” which is part of the California Building Standards Code, 2025 Edition, as adopted by the California Building Standards Commission and the International Association of Plumbing and Mechanical Officials is hereby adopted without local amendments, by the City of Burbank and made a part of this Code.

ARTICLE 6. CALIFORNIA ENERGY CODE

9-1-6: ADOPTION OF 2025 CALIFORNIA ENERGY CODE

Part 6 of Title 24 of the California Code of Regulations, also known as the “California Energy Code,” which is part of the California Building Standards Code, 2025 Edition, as adopted by the California Energy Commission and the California Building Standards Commission, is hereby adopted without local amendments, by the City of Burbank and made a part of this Code.

ARTICLE 7. CALIFORNIA WILDLAND-URBAN INTERFACE CODE

9-1-7: ADOPTION OF 2025 CALIFORNIA WILDLAND-URBAN INTERFACE CODE

Part 7 of Title 24 of the California Code of Regulations, also known as the "California Wildland-Urban Interface Code," which is part of the California Building Standards Code, 2025 Edition, together with Appendix A as adopted by the California Building Standards Commission and the International Code Council, is hereby adopted by the City of Burbank and made a part of this Code, with certain amendments, additions, and deletions as stated in this Article.

9-1-7-302.1.1: ESTABLISHMENT OF THE BURBANK FIRE HAZARD SEVERITY ZONES

The following section is added to Chapter 3 of the California Wildland-Urban Interface Code (Part 7) to read as follows:

> **"302.1.1 Establishment of the Burbank Fire Hazard Severity Zones**. For the purposes of the Burbank Wildland-Urban Interface Code, the Burbank Fire Hazard Severity Zones are hereby established. The designated fire zones have been reclassified into three severity levels: Moderate, High, and Very High. The boundaries of the Burbank Severity Zones are shown on a map designated "Burbank Very High, High, and Moderate Fire Hazard Severity Zones" consisting of one sheet on file in the Office of the Fire Official, which map, together with any amendments thereto, hereby adopted and made a part of the Burbank Wildland-Urbank Interface Code.
>
> Any future amendments or modifications to any severity zone map by the California Department of Forestry and Fire Protection (CAL FIRE), Office of the State Fire Marshal (OSFM) may be adopted by Resolution by the City Council and incorporated herein."

9-1-7-604.3.1: FIRE HAZARD REDUCTION IN FIRE HAZARD SEVERITY ZONES:

The following section is added to Chapter 6, Part 7 of the CBSC:

> **"604.3.1 Fire hazard reduction in Fire Hazard Severity Zones.**
>
> A. General brush removal. Cut or uncut weeds, grass, vines, palm fronds, and other vegetation shall be removed as set forth herein. Additional areas may be requested to be cleared if determined by the Fire Code Official to be a fire hazard. When the Fire Code Official determines that total removal of growth is impractical due to size or environmental factors, approved fuel breaks shall be established. Designated areas shall be cleared of combustible vegetation to establish the fuel breaks.
>
> B. Specific requirements. Each person who has any ownership or possessory interest in, or control of, a parcel of land shall:
>
> 1. Maintain CLEARANCE: 0 - 100 Feet

a. Remove from the property all dead trees and maintain all weeds and other vegetation at a height of no more than three inches, except as otherwise provided therein, if such weeds or other vegetation are within 100 feet of a building or structure located on such property or on adjacent property. This requirement does not apply to the maintenance of trees, ornamental shrubbery, or plants which are used as ground cover provided such do not provide a ready fuel supply to augment the spread or intensity of a fire.
b. Native shrubs may remain provided such shrubs are trimmed up from the ground to one-third of their height, do not exceed 216 cubic feet in volume, are spaced at a distance of not less than three times their maximum diameter but not less than 18 feet from the edge of any other native shrub, building, or structure, and all dead wood and other combustible material within 18 feet of such shrubs are removed except as provided above.
c. Maintain trees which are 18 feet or more in height and are within 100 feet of any building or structure or within 10 feet of that portion of any highway, street, alley, or driveway which is improved or used for vehicle travel or other vehicular purposes, so that no leafy foliage, twigs, or branches are within six feet of the ground. Trees and shrubs less than 18 feet shall be trimmed up 1/3 of their height.
d. Remove any portion of a tree which extends within 10 feet of the outlet of a chimney or stovepipe.
e. Keep all trees, shrubs, and other growing vegetation or portions thereof adjacent to or overhanging any building or structure free of dead limbs, dead palm fronds, branches, and other combustible matter.
f. Maintain five feet of vertical clearance between roof surfaces and portions of trees overhanging any building or structure.
g. Remove dead palm fronds on all palm trees.
h. Maintain the roofs of all buildings or structures free of leaves, needles, twigs, and other combustible matter.
i. Maintain all weeds and other vegetation located within 10 feet of any combustible fence or an edge of that portion of any highway, street, alley, or driveway improved or used for vehicular travel or for other vehicular purposes at a height of not more than three inches. This shall not require the removal of trees, ornamental shrubbery, or plants which are used as ground cover, provided such do not provide a ready fuel supply to augment the spread or intensity of a fire, nor require the removal of native shrubs which meet the requirements set forth in section (b).
j. Maintain all landscape vegetation, including, but not limited to conifers (e.g., cedar, cypress, fir, juniper, and pine), eucalyptus, acacia, palm, and pampas grass in such a condition as not to provide an available fuel supply to augment the spread or intensity of a fire.

k. Remove and/or safely dispose of all cut vegetation and hazardous refuse.

l. Burbank Fire Department personnel may introduce greater protection levels in high danger areas. In cases where difficult terrain, danger, erosion or unusual circumstances make compliance impractical, the Burbank Fire Department may suspend or adjust the requirements.

2. Maintain CLEARANCE: 100 - 200 Feet.
(Fuel Modification Zone):
An additional 100 feet of clearance measured from a building or structure located on such property or on adjacent property, is also required by the Fire Department for a total clearance of 200 feet. The native brush in this zone shall be reduced by 50 percent. Sumac clusters shall be reduced leopard spot style and meet the requirements outlined in section (b). The brush may be cut, chipped, or chopped to lay flat and may be left on the site to a maximum depth of 6". Clearance must conform to California Fair Plan Standards."

C. Additional Requirements: The provisions of this section shall apply to brush clearance operations conducted within the Burbank Fire Hazard Severity Zones:

1. Use of metal cutting blades for grass or brush clearance shall be limited to those which are non-ferrous or non-sparking.
2. Brush clearance cannot be done on red flag days, when fire weather conditions are at their peak.
3. Individuals engaged in brush clearance operations shall not engage in any other activities during their actual clearance of grass or brush.
4. An approved fire extinguisher, or a pressurized garden hose with attached nozzle shall be within 10 feet of any grass or brush clearance operation, to quickly extinguish a small fire before it burns out of control.
5. A cell phone capable of dialing 9-1-1 shall be charged and readily accessible to the grass or brush clearance operation.

9-1-7-604.3.2: ENFORCEMENT:
The following section is added to Chapter 6, Part 7 of the CBSC:

"**604.3.2 Enforcement.** The Fire Code Official is authorized to administer and enforce the provisions of Section 604.3. Property owners will be notified and provided reasonable time frames to comply. Failure to comply shall be a violation of this Code and the Government Code 51186 and may result in citation and/or hazard abatement by the City's designated contractor at the property owner's expense.

ARTICLE 8. CALIFORNIA HISTORICAL BUILDING CODE

9-1-8: ADOPTION OF 2025 CALIFORNIA HISTORICAL BUILDING

Part 8 of Title 24 of the California Code of Regulations, also known as the “California Historical Building Code,” which is part of the California Building Standards Code, 2025 Edition, as adopted by the California Building Standards Commission and the International Code Council, is hereby adopted without local amendments, by the City of Burbank and made a part of this Code.

ARTICLE 9. CALIFORNIA FIRE CODE

9-1-9: ADOPTION OF 2025 CALIFORNIA FIRE CODE:
Part 9 of Title 24 of the California Code of Regulations, also known as the “California Fire Code,” which is part of the California Building Standards Code, 2025 Edition, including the table of contents, all annexes, appendices, and the index, as adopted by the California Building Standards Commission and the International Code Council, is hereby adopted by the City of Burbank and made a part of this Code, with certain amendments, additions, and deletions as stated in this Article.

9-1-9-100: GENERAL:

A. PUBLIC INSPECTION.

The California Fire Code, and all secondary codes referred to therein are on file and open to public inspection in the office of the Building and Safety Division and the Fire Department.

B. SPECIAL CLIMATIC, GEOGRAPHICAL, TOPOGRAPHICAL, AND ENVIRONMENTAL CONDITIONS.

Certain areas of the City of Burbank are characterized by mountainous hillsides, heavy vegetation, and narrow streets. These conditions, combined with Burbank's climate, exacerbate the potential for fires to spread and require certain amendments to the California Fire Code to ensure the safety of persons and property. In addition, certain modifications are required due to the fact that in many locations in the City, especially in the hillside, there are access and egress problems, which can make a timely emergency response more difficult.
Also, the City requires a higher degree of fire safety due to the fact that the City is within an earthquake zone. In the event of an earthquake, numerous structures in the City could be seriously damaged and emergency response crews would not be available to respond to every incident immediately. Various amendments to the California Fire Code will ensure greater protection from fires which can occur (and if unchecked spread quickly due to the City's density and terrain) in an earthquake. In addition to hazards to structures and persons, the safe storage and disposal of hazardous material could be adversely affected by seismic activity. Similarly, the potential for leaks from storage tanks after a seismic event is great. The modifications will provide higher levels of safety for the public during and immediately after a major earthquake.

Finally, certain other amendments are required because the City is highly urbanized, has dense residential areas, and in some areas has very small residential lots. Furthermore, numerous residential areas are located in close proximity to non-residential uses, such as manufacturing, media and airport uses, all of which present special and unique hazards. The density of the City and the

proximity of residential uses to other uses requires additional safeguards to protect life and property of the residents, employees and visitors of the City.
The Council hereby finds that it is reasonably necessary to make certain changes or modifications in the California Fire Code as adopted by the California Building Standards Commission based on the 2024 International Fire Code, and that such changes and modifications are reasonably necessary because of climatic, geographical, topographical, or environmental conditions which pertain to the City of Burbank. Such changes and modifications are herein more particularly set forth in this Article.

C. SHORT TITLE.
In this chapter and any ordinance or resolution of the City where the phrase "Fire Code" appears, such phrase shall be deemed to refer and apply to the California Fire Code (“CFC”) which is described and referred to in the preceding section, as the same is amended by this Article.

D. NUMBERING OF CODE.
In order to provide consistency between this article and the provisions of the California Fire Code the section, subsection, and paragraph numbers or designations of the California Fire Code shall be retained in this article and shall be preceded by the prefix "9-1-9". The 9 refers to this Title, the number 1 refers to this Chapter and the second number 9 refers to this Article. The subsequent numbers and decimal points are the section and subsection designations used in or added to the California Fire Code.

9-1-9-104.6.1: APPEAL TO FIRE CODE OFFICIAL:
The following section is added to Chapter 1, Part 9 of the CFC:

“**104.10.1.1 Appeal to Fire Code Official.** Whenever an Order or Notice issued or served under this Code is signed by a member of the fire department, the owner or occupant or other person served may appeal to the Fire Code Official within five (5) days from the time of service, exclusive of Saturdays, Sundays, or holidays. The Fire Code Official shall review such Order or Notice and render a decision within seven (7) days from the review or hearing of the appeal. The Fire Code Official may affirm or revoke the Notice or may extend the time fixed for compliance. Unless revoked, the Order of Notice shall remain in full force and effect and shall be complied with within the time originally fixed, or if an extension is granted, within the time prescribed in the extension.”

9-1-9-104.10.2: INVESTIGATIONS:
The following section is added to Chapter 1, Part 9 of the CFC:

“**104.10.2 Investigations.** The Fire Department shall promptly investigate the cause, origin and circumstances of each and every fire occurring in the City involving loss of life or injury to person or destruction or damage to property. If it appears that such fire is of suspicious origin, the fire department is authorized to

take immediate charge of all physical evidence relating to the cause of the fire and is authorized to pursue the investigation to its conclusion.

The Fire Department shall investigate the cause, origin and circumstances of unauthorized releases of hazardous materials."

9-1-9-104.11.4: FIRE PREVENTION BUREAU PERSONNEL AND POLICE:
The following section is added to Chapter 1, Part 9 of the CFC:

"**104.11.4 Fire prevention bureau personnel and police.** Members of the Fire Department may act as peace officers only as permitted by Section 830.37 of the California Penal Code. All members of the Fire Department at the rank of Captain and above; and all members of the Fire Prevention Bureau who are peace officers as defined in Section 830.37 of the Penal Code and members who have been designated by the Fire Code Official as arson investigators and who have satisfactorily completed the courses of training required by Section 832 of the Penal Code are designated as peace officers. Fire Captains assigned to the arson investigation unit are authorized to carry a fire arm with permission of the Fire Chief, while engaged as a member of an arson investigating unit, regularly employed and paid as such, in the detection and apprehension of persons who have violated or who are suspected of having violated any fire law, or while exclusively engaged in the enforcement of laws relating to fire prevention and fire suppression, provided such practice is in compliance with current applicable state laws and City Policy.

When requested to do so by the Fire Code Official, the Chief of Police is authorized to assign such available police officers as necessary to assist the fire department in enforcing the provisions of this code."

9-1-9-104.11.5: COST OF EMERGENCY RESPONSE:
The following section is added to Chapter 1, Part 9 of the CFC:

"**104.11.5 Cost of emergency response.** Any person owning or maintaining any occupancy, premises, or vehicle subject to this Code, who negligently or intentionally causes a fire or fire hazard resulting in an appropriate emergency response, which had been previously ordered abated by the Fire Code Official, is liable for all costs of the emergency response to the incident, as set forth in the Burbank Fee Resolution."

9-1-9-105.5.5.1: PARADE FLOATS:
The following section is added to Chapter 1, Part 9 of the CFC:

"**105.5.5.1 Parade floats.** A permit is required to use a parade float for public performance, presentation, spectacle, entertainment, or parade. See Chapter 3 of the CFC."

9-1-9-105.5.6.1: CELLULOSE NITRATE STORAGE:

The following section is added to Chapter 1, Part 9 of the CFC:

"**105.5.6.1 Cellulose nitrate storage.** A permit is required to store or handle more than 25 pounds (11.3 kg) of cellulose nitrate plastic (pyroxylin) for the manufacturing or assembly of articles or parts of articles containing cellulose nitrate plastics (pyroxylin). See Chapter 3 of the CFC."

9-1-9-105.6: REQUIRED CONSTRUCTION PERMITS:
Section 105.6 of Chapter 1, Part 9 of the CFC is amended and restated as follows:

"**105.6 Required construction permits.** The Fire Code Official is authorized to issue construction permits for work as set forth in Sections 105.6.1 through 105.6.26."

9-1-9-105.6.26: OTHER:
The following section is added to Chapter 1, Part 9 of the CFC:

"**105.6.26 Other.** Any permit required by the Fire Code Official and not otherwise covered above."

9-1-9-108.2.1: PERMIT FEES:
The following section is added to Chapter 1, Part 9 of the CFC:

"**108.2.1 Permit fees.** It shall be unlawful for any person, group, firm, or corporation to use a building or premises or engage in any activities for which a permit is required by this Code without first having obtained such permit. Permits are obtained from the Bureau of Fire Prevention. Any person required by this Code to have a permit shall apply for such permit and shall pay a fee as designated in the Burbank Fee Resolution. Unless otherwise specified, such fee shall be paid annually on the first day of the month in which such permit application was first made. Failure to comply with this section shall be a misdemeanor."

9-1-9-108.2.1.1 PERMIT FEE EXEMPTIONS:
The following section is added to Chapter 1, Part 9 of the CFC:

"**108.2.1.1 Permit fee exemptions.**

A. GOVERNMENT FEE EXEMPTION.
The City of Burbank, the County of Los Angeles, the Burbank Unified School District, and/or any department or office thereof are exempt from paying a permit fee for any activity, operation practice or function requiring a permit under Section 105 of the California Fire Code.

B. NON-PROFIT ORGANIZATION FEE EXEMPTIONS.
Any charitable, educational, religious, or other non-profit benevolent institution is exempt from paying a permit fee for the following activities, provided the net

proceeds, if any, of such activity are to be used exclusively for charitable, educational, religious, benevolent, or civic purposes:

1. Carnivals and fairs.
2. Temporary placement of displays in a covered mall.
3. Parade floats."

9-1-9-108.2.2 INSPECTION FEE:
The following subsection is added to Chapter 1, Part 9 of the CFC:

108.2.2 Inspection Fee. Fire and life safety plan check permit fees (Form FD4) cover three on-site inspections. When more than three inspections are required for the same inspection, an inspection fee will be charged as set forth in the Burbank Fee Resolution for each hour or portion of an hour required for additional inspections needed to gain compliance. Records of inspections and determination of billing hours will be completed by the inspector."

9-1-9-108.2.3: AUTOMATIC ADJUSTMENT OF FEES:
The following section is added to Chapter 1, Part 9 of the CFC:

"**108.2.3 Automatic adjustment of fees.** Fees and charges imposed pursuant to this article, as set forth in the Burbank Fee Resolution, shall be adjusted annually on the first day of July. The annual adjustment shall be made by adjusting all the current fees required in this article by a percentage equal to the inflation rate for the prior year for construction costs as determined by the Building Official on December 31st of each calendar year. The Building Official's determination shall be based upon the Engineering News Record, Construction Cost Index for the calendar year as of December 31st.

9-1-9-108.2.3.1: EXCEPTION: ACTION BY COUNCIL:
The following section is added to Chapter 1, Part 9 of the CFC:

"**108.2.3.1 Exception: action by Council.** Nothing in this section shall prevent the Burbank City Council from making rate and fee adjustments greater or less than indicated by the above calculation."

9-1-9-108.2.4: AUTOMATIC ADJUSTMENT FOR UNDERGROUND TANK FEES:
The following section is added to Chapter 1, Part 9 of the CFC:

"**108.2.4 Automatic adjustment for underground tank fees.** Fees and charges relating to underground tanks as designated in the Burbank Fee Resolution shall be updated and changed annually on the first day of July each year beginning January 1, 1991, by an adjustment as set forth in this section.
An automatic adjustment, as provided for in the fee resolution, shall not become effective until the thirty-first (31st) day after the Fire Code Official has provided the Council with written notification of such adjustment. The Fire Code Official shall file

with the City Clerk, a certification, in a form approved by the City Attorney, demonstrating compliance with this subsection."

9-1-9-108.2.4.1: ANNUAL ADJUSTMENT:
The following section is added to Chapter 1, Part 9 of the CFC:

"**108.2.4.1 Annual adjustment.** The annual adjustment shall be made by multiplying the underground tank related fees in the Burbank Fee Resolution by the Los Angeles/Riverside/Orange County, California Consumer Price Index (CPI) for all urban consumers of the preceding February and by dividing the result of said multiplication by the same index of the February of the previous year, as reported by the CPI detail report, Bureau of Labor Statistics."

9-1-9-108.2.4.2: EXCEPTION: ACTION BY COUNCIL:
The following section is added to Chapter 1, Part 9 of the CFC:

"**108.2.4.2 Exception: Action by Council.** Nothing in this section shall prevent the Burbank City Council from making rate and fee adjustments greater or less than indicated by the above calculation. An automatic adjustment, as provided for in the fee resolution, shall not become effective until the thirty-first (31st) day after the Fire Code Official has provided the Council with written notification of such adjustment. The Fire Code Official shall file with the City Clerk, a certification, in a form approved by the City Attorney, demonstrating compliance with this subsection."

9-1-9-108.4.1: INVESTIGATION FEES: WORK WITHOUT A PERMIT:
The following section is added to Chapter 1, Part 9 of the CFC:

"**108.4.1 Investigation fees: work without a permit.**

A. INVESTIGATION.
Whenever any work, operation, or action for which a permit is required by this Code has commenced without first obtaining said permit, the work, operation, or action shall cease, and a special investigation shall be made before a permit may be issued for such work.

B. FEE.
An investigation fee in an amount designated in the Burbank Fee Resolution and may be amended by the Council from time to time, in addition to the permit fee, shall be collected whether or not a permit is then or subsequently issued."

9-1-9-109.2.3: SELF-INSPECTION:
The following section is added to Chapter 1, Part 9 of the CFC:

"**109.2.3 Self-inspection.** Self-inspection programs may be developed, implemented, and enforced as determined necessary by the Fire Code Official.

Compliance with self-inspection program requirements, including completing and returning all forms within 30 days, shall be mandatory and subject to penalties for non-compliance."

9-1-9-112.5: BOARD OF BUILDING AND FIRE CODE APPEALS:
The following section is added to Chapter 1, Part 9 of the CFC:

"**112.5 Board of Building and Fire Code Appeals.** Any person aggrieved by a decision of the Fire Code Official pertaining to suitability of alternate materials, types of construction, or interpretation of the Fire Code may appeal to the Board of Building and Fire Code Appeals by filing a written notice with the Fire Code Official which must state briefly therein the grounds for appeal. The Fire Code Official decisions are not appealable where those decisions are clearly supported by the Code. The Fire Code Official shall fix a time and place for hearing such appeal within sixty (60) days from the date notice of appeal was filed and shall give not less than five (5) days' notice thereof to appellant and to each member of the Board. No notice of appeal shall be accepted unless the appellant first pays to the Fire Code Official the fee as designated in the Burbank Fee Resolution for filing such appeal. The decision of the Board shall be final and conclusive. Within seven (7) days thereafter, exclusive of Saturday, Sunday, and holidays, the Fire Code Official shall give notice of the decision to the appellant.

9-1-9-113.4.2: CODE VIOLATION INSPECTION FEE:
The following section is added to Chapter 1, Part 9 of the CFC:

"**113.4.2 Code violation inspection fee.** When compliance for a code violation is not completed within three inspections, an inspection fee as set forth in the Burbank Fee Resolution shall be charged for each hour or any portion of an hour required for additional inspections needed to gain compliance. Records of inspections and determination of billing hours will be completed by the inspector."

9-1-9-115.1.3: WARNING SIGNS:
The following section is added to Chapter 1, Part 9 of the CFC:

"**115.1.3 Warning signs.** Whenever the Fire Code Official shall determine that warning signs are required in the protection of persons or property from injury due to unauthorized entry into fire or explosion damaged buildings, the Fire Code Official shall order such buildings adequately posted with signs reading, "DANGER FIRE-DAMAGED BUILDING, KEEP OUT." It shall be unlawful for any person to enter or remain within any such posted damaged building, except that the occupants/owners of the building or of any materials or equipment therein, their authorized representatives or invitees, public officers acting in the course of duty, and representatives of public or private utilities, shall be exempt from the provisions of this section."

9-1-9-202: DEFINITIONS:
Section 202 of Chapter 2, Part 9 of the CFC is amended by adding the following definitions:

HIGH-RISE BUILDING: Is a building having floors used for human occupancy located more than 75 feet (22 860 mm) above the lowest level of fire department vehicle access, as measured from the walking surface of the highest human occupied floor to the surface of the lowest fire department access road complying with Chapter 5 of the 2025 California Fire Code.

EXCEPTIONS:
1. Health Facility as defined in Section 1250 of the Health and Safety Code.
2. Buildings used exclusively as open parking garages.
3. Buildings where all floors above 75 foot (22 860 mm) level are used exclusively as open parking garages.
4. Floors of buildings used exclusively as open parking garages and located above all other floors used for human occupancy.
5. Buildings such as power plants, lookout towers, steeples, grain houses, and similar structures with non-continuous human occupancy, when approved.
6. Buildings used exclusively for jails and prisons.

MID-RISE BUILDING: Is a building having floors used for human occupancy located more than 35 feet (10 668 mm), but less than 75 feet (22 860 mm) above the lowest level of fire department vehicle access, as measured from the walking surface of the highest human occupied floor to the surface of the lowest fire department access road complying with Chapter 5 of the 2025 California Fire Code.

EXCEPTIONS: See the list of exceptions under High-Rise Building.

9-1-9-304.1.2.1: PREMISES MAINTENANCE:
The following section is added to Chapter 3, Part 9 of the CFC:

"304.1.2.1 Premises maintenance. All exterior property and premises, and the interior of every structure, shall be maintained in a clean and safe condition and kept free from any accumulation of rubbish or garbage. The interior shall be maintained so as not to impede the egress of occupants, endanger other structures because of excessive, improper, or unapproved fire loading or storage practices or endanger firefighters who respond to an emergency therein."

9-1-9-307.1.1.1: OPEN BURNING GENERAL:
The following section is added to Chapter 3, Part 9 of the CFC:

"**307.1.1.1 Open burning general.** The Fire Code Official is authorized to issue a permit for open burning only for the following purposes and subject to the provisions hereinafter set forth:

a. The prevention or removal of a fire hazard which cannot be abated by any other means, restricted to the hours of six (6) a.m. to twelve (12) noon of any day.
b. City lot burning crews operating under the authority of the Public Works Director.
c. The instruction of public employees in the methods of fighting fire.
d. On property used for commercial/industrial purposes for the instruction of employees in the methods of fighting fire.
e. For public or private gatherings under the legitimate sponsorship of civic, fraternal, religious, or other similar organizations.
f. Permits to burn must comply with regulations of the South Coast Air Quality Management District."

9-1-9-307.1.1.2: STARLIGHT AMPHITHEATER - OPEN FLAMES AND BURNING PROHIBITED:
The following section is added to Chapter 3, Part 9 of the CFC:

"**307.1.1.2 Starlight amphitheater - open flames and burning prohibited.** No person shall light a flame or cause the combustion of any flammable substance or matter at any time at or on the premises of the Starlight Amphitheater.

EXCEPTION: Areas which have been designated as approved for smoking by the Fire Code Official."

9-1-9-315.1.1: CORRECTIVE ACTIONS:
The following section is added to Chapter 3, Part 9 of the CFC:

"315.1.1: Corrective actions. The Fire Code Official may give notice to the owner of the property upon which conditions regulated by Section 315 of the 2025 CFC exist to correct such condition. If the owner fails to correct such condition, the Fire Code Official may cause the same to be done and make the expense of such correction a lien upon the property upon which such condition exists in the manner and under the procedures provided in Article 2 of Title 4 Chapter 2 of the Burbank Municipal Code."

9-1-9-401.3.3.1: REPORTING EMERGENCIES:
The following section is added to Chapter 4, Part 9 of the CFC:

"**401.3.3.1 Reporting emergencies.** In the event a fire occurs, a fire alarm is activated, or the discovery of a fire, smoke or unauthorized release of flammable or hazardous materials on any property occurs, the owner or occupant shall without delay report such condition to the Fire Department."

9-1-9-403.11.1(a): REQUIREMENTS FOR PUBLIC SAFETY:
The following section is added to Chapter 4, Part 9 of the CFC:

"**403.11.1(a) Requirements for public safety.** When necessary for the preservation of life or property, the Fire Code Official is authorized to assign a Fire Safety Officer(s) (FSO) and/or fire apparatus equipment on a case-by-case basis."

9-1-9-503.1.2.1: HIGH-RISE AND MID-RISE BUILDINGS:
The following section is added to Chapter 5, Part 9 of the CFC:

"**503.1.2.1 High-rise and mid-rise buildings.** High-rise and Mid-rise buildings shall be accessible on a minimum of two sides. Roadway distance to building shall be not less than 15 feet or more than 30 feet from the building in accordance with Appendix D. Landscaping or other obstructions shall not be placed or maintained around structures in a manner so as to impair or impede accessibility for firefighting and rescue operations."

9-1-9-503.2.1.1: FIRE APPARATUS ACCESS ROADS:
The following section is added to Chapter 5, Part 9 of the CFC:

"**503.2.1.1: Fire Apparatus Access Roads.** Fire apparatus access roads shall have an unobstructed width of not less than 26 feet (6096 mm), exclusive of shoulders, except for approved security gates in accordance with Section 503.6, and an unobstructed vertical clearance of not less than 13 feet 6 inches (4115 mm)."

9-1-9-505.1.1: RESIDENTIAL BUILDING IDENTIFICATION:
The following section is added to Chapter 5, Part 9 of the CFC:

"**505.1.1 Residential building identification.**

A. STREET NUMBER.

All residential structures shall display a street number in a prominent position so that it shall be easily visible from the street. The numbers shall be at least four (4) inches in height, of a color contrasting to the background and located so they may be clearly seen and read. If the structure has rear vehicle access, numbers shall be placed there as well. The Fire or Police departments may require the size of the numbers to be increased or provided in additional locations if the distance from or orientation to the street limits visibility.

B. PLOT PLAN.

At each entrance to a multiple-family dwelling complex of a private residential community which has ten (10) or more units, there shall be an illuminated diagrammatic representation (plot plan) of the complex which shows the location of the viewer and the building units within the complex. The diagrammatic representation shall be drawn to one-eighth (1/8) inch scale or larger and shall not be less than eight and one-half (8 1/2) inches by eleven (11) inches and shall have

all weather-exposed surfaces treated to prevent damage from the sun, wind and rain.

C. IDENTIFYING FACTOR.
In multiple-family dwelling complexes which have ten (10) or more units, any building having separate identifying factor, other than the street number shall be clearly identified in the manner described in this article. Each individual unit of residence shall have a unit identifying number, letter or combination thereof displayed upon the door.

D. NUMBERING.
Buildings shall be numbered with the approval of the enforcing authority. This section shall not prevent supplementary numbering such as reflective numbers on the street curbs or decorative numbering, but this shall be considered supplemental only and shall not satisfy the requirements of this section.

E. MAPS.
Maps of multiple-family dwelling complexes shall be furnished to the fire department upon completion of construction. The maps shall include building identification and unit identification."

9-1-9-505.1.2: COMMERCIAL BUILDING IDENTIFICATION:
The following section is added to Chapter 5, Part 9 of the CFC:

"**505.1.2 Commercial building identification.**
A. STREET NUMBER.
All commercial structures shall display a street number in a prominent position so that it shall be easily visible from the street. The numbers shall be at least six (6) inches in height, of a color contrasting to the background and located so they may be clearly seen and read. If the structure has rear vehicle access, numbers shall be placed there as well. The Fire or Police Departments may require the size of the numbers to be increased or provided in additional locations if the distance from or orientation to the street limits visibility.

B. IDENTIFYING FACTOR.
In commercial complexes, any building having a separate identifying factor, other than the street number shall be clearly identified in the manner described in this article. Each individual unit shall have a unit identifying number, letter or combination thereof displayed upon the door.

C. NUMBERING.
Buildings shall be numbered with the approval of the enforcing authority. The section shall not prevent supplementary numbering such as reflective numbers on street curbs or decorative numbering but this shall be considered supplemental only and shall not satisfy the requirements of this section.

D. MAPS.
Maps of commercial complexes shall be furnished to the fire department upon completion of construction. The maps shall include building identification and unit identification."

9-1-9-505.1.3: PREMISES IDENTIFICATION:
The following section is added to Chapter 5, Part 9 of the CFC:

"**505.1.3 Premises identification.** Approved numbers or addresses shall be placed on all new and existing buildings in such a position as to be plainly visible and legible from the street or road fronting the property and from the alley or rear access way to the property. Numbers/addresses on residential structures shall be at least four (4) inches (101.6 mm) in height with three-fourths (3/4) inch (19.1 mm) stroke. All other occupancies shall have numbers/addresses a minimum of six (6) inches (152.4 mm) in height with three-fourths (3/4) inches (19.1) stroke. All numbers/address shall contrast with their background."

9-1-9-903.2(a): REQUIRED INSTALLATIONS:
The following section is added to Chapter 9, Part 9 of the CFC:

"**903.2(a) Required installations.** An approved automatic fire sprinkler system shall be installed in all newly constructed occupancies.

EXCEPTION: Existing Group U Division 1 Occupancies, detached less than 500 square feet (4.5 m^2).

For provisions on special hazards and hazardous materials, see Chapters 50 through 67 of the CFC 2025."

9-1-9-903.2(b): SPECIAL PROVISIONS FOR ALL BUILDINGS:
The following section is added to Chapter 9, Part 9 of the CFC:

"**903.2(b) Special provisions for all buildings.** An automatic sprinkler system shall be installed in the following areas of all buildings.

A. At the top of rubbish and linen chutes; in their terminal rooms and all trash enclosures. Chutes extending through three or more floors shall have additional sprinkler heads installed within such chutes at alternate floors. Sprinkler heads shall be accessible for servicing.

B. In rooms where nitrate film is stored or handled.

EXCEPTION: When storage or handling of nitrate film is less than 50 pounds (22.7 kg)/10 standard rolls and stored in an approved cabinet. In protected combustible fiber storage vaults.

C. Existing Buildings.

1. Additions.

If an addition to an existing building causes the total floor area of the entire building to exceed five thousand (5,000) square feet (464.5 m^2), then said entire building shall be protected by an automatic fire sprinkler system. Area separation walls as set forth in the California Building Code shall not be used to reduce allowable floor area for automatic fire sprinkler requirements.

2. Alterations/Repairs.

Any alterations or repairs to an existing building, other than a Group R, that equal or exceed five thousand (5,000) square feet (464.5 m^2), or wherein the costs of such alterations exceed twenty-five percent (25%) of the current replacement value of said building as determined by the most recent Building Valuation Data published by the International Code Council (ICC), then said entire building shall be protected by an automatic fire sprinkler system. All alterations or additions within any such twelve (12) consecutive month period that singularly or in composite exceed said 25% of the current replacement value of said building as determined by the most recent Building Valuation Data published by ICC, then said entire building shall be protected by an automatic fire sprinkler system.

3. R1 - Alterations/Repairs/Additions.

Any alterations or repairs to an existing Group R Division 1 Hotel, apartment, and lodging house, that within any twenty four (24) consecutive month period exceed fifty percent (50%) of the current replacement value of said building, as determined by the most recent Building Valuation Data published by International Code Council (ICC), then said entire building shall be protected by an automatic fire sprinkler system.

4. R3 - Alterations/Repairs.

Any alterations or repairs to an existing Group R Division 3 dwelling that within any twenty four (24) consecutive month period exceed seventy-five percent (75%) of the current replacement value of said building, as determined by the standards approved by the Fire Code Official, then said entire building shall be protected by an automatic fire sprinkler system.

5. Occupancy Change.

Existing and new sections of an existing building for which there is an occupancy classification change to a more restrictive or hazardous use, as determined by the Fire Code Official, shall be protected by an automatic fire sprinkler system."

9-1-9-903.2.8(a): GROUP R OCCUPANCIES:

The following section is added to Chapter 9, Part 9 of the CFC:

"**903.2.8 (a) Group R occupancies.** When a Group R occupancy is required to be protected by an automatic fire sprinkler system, the attic, basement or subterranean space, all restrooms/bathrooms, and attached garage shall be fully covered by such system.

Exception: Where decided by the Fire Code Official; access to the attic, if the basement or subterranean space is restricted and non-accessible for storage or other use, automatic fire sprinklers shall not be required to be provided. HVAC or similar equipment may be enclosed from the remainder of the space with approved fire proof construction and sprinklers provided within the enclosure. The Fire Code Official shall have the authority to require or modify the requirements set forth in this section on a case-by-case basis."

9-1-9-903.4.2.1: SPRINKLER SYSTEM MONITORING AND ALARMS:
The following section is added to Chapter 9, Part 9 of the CFC:

"**903.4.2.1 Sprinkler system monitoring and alarms.**
A. WHERE REQUIRED.
All Valves controlling the water supply for automatic sprinkler systems and water-flow switches on all sprinkler systems shall be electronically monitored by a UL listed company unless otherwise approved by the Fire Code Official, where the number of sprinklers are twenty or more.

Valve monitoring and water-flow alarm and trouble signals shall be distinctly different and shall be automatically transmitted to an approved central station, remote station or proprietary monitoring station as defined by NFPA 72 and International Fire Codes and shall sound an audible signal at a constantly attended location.

EXCEPTION: Underground key or hub valves in roadway boxes provided by the municipality or public utility need not be monitored.

B. ALARMS.
An approved audible sprinkler flow alarm shall be provided on the exterior of the building in an approved location. Approved audible and visual sprinkler flow alarms for all occupancies, shall be provided throughout the structure building to notify all occupants. Actuation of the alarm shall be as set forth in NFPA 13 as adopted by California State Fire Marshal.

Exception: Group R Division 3 Occupancies

C. ALARM ACTIVATION - AUTOMATIC FIRE EXTINGUISHING SYSTEMS.
All Automatic Fire Extinguishing Systems shall provide an audible local alarm when activated. If the occupancy has a fire sprinkler alarm, fire alarm or water flow monitoring, the automatic fire extinguishing system shall be tied into said system."

9-1-2-4804.2.1: STUDIO AND STAGE EXIT PERIMETERS:
The following section is added to Chapter 48, Part 9 of the CFC:

> "**4804.2.1 Studio and stage exit perimeters.** All studios and stages shall be provided with a clear, unobstructed aisle around the perimeter of not less than 48 inches (1219 mm) wide and a minimum of 84 inches (2134 mm) in height. Aisles shall provide access to exit doors, firefighting equipment and utility controls.
> Such aisle shall be clearly marked with a minimum 4 inch (102 mm) wide stripe at the inside edge of the aisle. The total width of the stripe shall be within the required 48 inch (1219 mm) width. The words "FIRE AISLE" shall be painted in a contrasting color every 20 feet (6096 mm) within the perimeter."

9-1-9-5001.5.1(a): UNIFIED HAZARDOUS WASTE AND MATERIALS MANAGEMENT REGULATORY PROGRAM:
The following section is added to Chapter 50, Part 9 of the CFC:

> "**5001.5.1(a) Unified hazardous waste and materials management regulatory program.** California Health and Safety Code Section 25404 establishes the Unified Hazardous Waste and Materials Management Regulatory Program requiring consolidation of six environmental programs jointly operated by the County of Los Angeles and the City of Burbank. On December 10, 1996, the Burbank City Council passed and adopted resolution number 24,929, approving an agreement and memorandum of understanding with the County of Los Angeles whereby the County will act as a Certified Unified Program Agency ("CUPA") for the City, and the City will be a participating agency."

9-1-9-5003.3.1.5: HAZARDOUS MATERIALS, RELEASE RESPONSE PLAN, INVENTORY:
The following section is added to Chapter 50, Part 9 of the CFC:

> "**5003.3.1.5 Hazardous materials, release response plan, inventory.** The City, pursuant to Section 25502 of the California Health and Safety Code, shall be responsible for the implementation of Chapter 6.95 (commencing with Section 25500) of Division 20 of the California Health and Safety Code and shall have exclusive jurisdiction within the corporate boundaries of the City for the purpose of carrying out such chapter. The Fire Code Official, or the designee of the Fire Code Official, shall be responsible for the administration and enforcement of such chapter. All fees and charges of any kind necessary for the enforcement of such chapter shall be as designated in the Burbank Fee Resolution, as amended from time to time."

9-1-9-5003.3.1.6: EMERGENCY RESPONSE EXPENSES:
The following section is added to Chapter 50, Part 9 of the CFC:

"**5003.3.1.6 Emergency response expenses.** The expenses of an emergency response necessary to protect the public or environment from a real and imminent threat due to a release of a Hazardous Material or substance as defined in this article or the California Health and Safety Code, as well as the cost of cleaning up and disposing of the hazardous materials shall be charged against any person, firm or corporation responsible thereof."

9-1-9-5003.4.1: MATERIAL SAFETY DATA SHEETS:
The following section is added to Chapter 50, Part 9 of the CFC:

"**5003.4.1 Material safety data sheets.** Material Safety Data Sheets (MSDS) shall be readily available on the premises for hazardous materials regulated by this article. The Fire Code Official may require an approved Knox vault, when there is an acutely hazardous material or threshold quantities are met (55 gallons, 200 cubic feet, 500 pounds), to be installed in an approved location which shall contain MSDS sheets, site plans and emergency phone numbers as necessary for that facility."

9-1-9-5608.1(a): PROHIBITION:
The following section is added to Chapter 56, Part 9 of the CFC:

"**5608.1(a) Prohibition.** No person shall manufacture, possess, sell, or discharge fireworks.

EXCEPTION: The use of fireworks for display is allowed as set forth in Section 5608 of the 2025 CFC."

ARTICLE 10. CALIFORNIA EXISTING BUILDING CODE

9-1-10: ADOPTION OF 2025 CALIFORNIA EXISTING BUILDING CODE

Part 10 of Title 24 of the California Code of Regulations, also known as the “California Existing Building Code,” which is part of the California Building Standards Code, 2025 Edition, and Appendices A1, A3, A4, as adopted by the California Building Standards Commission and the International Code Council, is hereby adopted without local amendments by the City of Burbank and made a part of this Code.

ARTICLE 11. CALIFORNIA GREEN BUILDING STANDARDS CODE

DIVISION 1. GREEN BUILDING AND SUSTAINABLE ARCHITECTURE

9-1-11: ADOPTION OF 2025 CALIFORNIA GREEN BUILDING STANDARDS CODE:
Part 11 of Title 24 of the California Code of Regulations, also known as the "California Green Building Standards Code," which is part of the California Building Standards Code, 2025 Edition, as adopted by the California Building Standards Commission, is hereby adopted and made a part of this Code, with certain amendments, additions, and deletions as stated in this Article.

9-1-11-4.509: COOL ROOF FOR REDUCTION OF HEAT ISLAND EFFECT:
The following section is added to Chapter 4, Part 11 of the CBC to read as follows:

"9-1-11-4.509: Cool roof for reduction of heat island effect.
Roofing materials shall comply with the solar reflectance and thermal emittance requirements of this section.
Exceptions:

1. Roof repair
2. Installation of building-integrated photovoltaics
3. Roof construction that has a thermal mass over the roof membrane, including areas of vegetated (green) roofs, weighing at least 25 pounds per square foot

A. Solar Reflectance
Roofing materials shall have a minimum 3-year aged solar reflectance equal to or greater than the values specified in Table 4.509(1) and Table 4.509(2)

B. Thermal Emittance
Roofing materials shall have a *Cool Roof Rating Council* initial or aged thermal emittance equal to or greater than the values specified in Table 4.509(1) and Table 4.509(2)

C. Solar Reflective Index Alternative
Roofing materials having a Solar Reflectance Index (SRI) equal to or greater than the values specified in Table 4.509(1) and Table 4.509(2) may be used as an alternative to compliance with the 3-year aged solar reflectance and thermal emittance values."

Table 4.509(1) – LOW-RISE RESIDENTIAL

ROOF SLOPE	MIN 3-YEAR AGED SOLAR REFLECTNACE	THERMAL EMITTANCE	SRI
< 2:12	0.65	0.85	78
> 2:12	0.23	0.85	20

Table 4.509(2) – HIGH-RISE RESIDENTIAL, HOTELS, AND MOTELS

ROOF SLOPE	MIN 3-YEAR AGED SOLAR REFLECTNACE	THERMAL EMITTANCE	SRI
< 2:12	0.65	0.75	78
> 2:12	0.23	0.75	20

9-1-11-5.509: COOL ROOF FOR REDUCTION OF HEAT ISLAND EFFECT:
The following section is added to Chapter 5, Part 11 of the CBC to read as follows:

"9-1-11-5.509: Cool roof for reduction of heat island effect.
Roofing materials shall comply with the solar reflectance and thermal emittance requirements of this section.
Exceptions:

1. Roof repair
2. Installation of building-integrated photovoltaics
3. Roof construction that has a thermal mass over the roof membrane, including areas of vegetated (green) roofs, weighing at least 25 pounds per square foot

A. Solar Reflectance
Roofing materials shall have a minimum 3-year aged solar reflectance equal to or greater than the values specified in Table 5.509

B. Thermal Emittance
Roofing materials shall have a *Cool Roof Rating Council* initial or aged thermal emittance equal to or greater than the values specified in Table 5.509

C. Solar Reflective Index Alternative
Roofing materials having a Solar Reflectance Index (SRI) equal to or greater than the values specified in Table 5.509 may be used as an alternative to compliance with the 3-year aged solar reflectance and thermal emittance values."

Table 5.509 – NON-RESIDENTIAL

ROOF SLOPE	MIN 3-YEAR AGED SOLAR REFLECTNACE	THERMAL EMITTANCE	SRI
< 2:12	0.68	0.85	82
> 2:12	0.28	0.85	27

1. Calculation for spaces shall be rounded up to the nearest whole number.
2. The number of required EVCS (EV capable spaces provided with EVSE) in column 3 count toward the total number of required EV capable spaces shown in column 2.

DIVISION 2. DIVERSION OF CONSTRUCTION AND DEMOLITION DEBRIS

9-1-11-1010: PURPOSE:

The purpose of this Division, known as the Diversion of Construction and Demolition Debris Ordinance, is to reduce the amount of construction and demolition debris deposited into landfills by implementing source reduction, diversion, and recycling goals for certain applicable construction and demolition projects.

Where sections of this Division and the California Building Standards Code differ, the more stringent requirements shall apply.

9-1-11-1011: DEFINITIONS:

For the purposes of this Article, the following definitions shall apply. Words and phrases not ascribed a meaning by this Division shall have the meaning ascribed by Public Resources Code Sections 40000, et seq., the regulations of the California Integrated Waste Management Board, if defined therein, as such may be amended from time to time, and in the Resource Conservation and Recovery Act (RCRA) 42 USC §§ 6901, et seq., and the regulations implementing RCRA, as they may be amended from time to time.

APPLICANT: Means any person, firm, limited liability company, association, partnership, political subdivision, governmental agency, municipality, industry, public or private corporation, or any other entity whatsoever required to apply to the Building Department for an applicable permit to undertake construction, renovation, remodeling, repair, deconstruction, or demolition operations.

APPLICABLE PROJECT: Means a project for which a building, demolition, or other similar permit is required by this Code, and not otherwise exempt in this Division.

CONSTRUCTION AND DEMOLITION DEBRIS or C&D DEBRIS: Means used or discarded materials removed from property of an Applicable Project during construction, remodeling, repair, renovation, demolition or deconstruction resulting from construction, renovation, remodeling, repair, deconstruction, or demolition operations on any house, commercial building or other structure. Construction and Demolition Debris includes, but is not limited to, concrete, asphalt, brick, lumber, tile, carpeting, plastic, aluminum, glass, metals, gypsum wallboard, roofing materials, carpeting, wood, remnants of new materials, including paper, plastic, carpet scraps, wood scraps, scrap metal, building materials, packaging and rubble resulting from construction, remodeling, renovation, repair and demolition operations on pavements, houses, commercial buildings and other structures.

CONSTRUCTION AND DEMOLITION DEBRIS DIVERSION REFERENCE MANUAL or MANUAL: Means a manual prepared by the Building Division of the Community

Development Department to assist in implementation of this Division. A copy of the Manual shall be available at all times at the Building Division public counter.

CONSTRUCTION AND DEMOLITION DIVERSION SECURITY DEPOSIT or DIVERSION SECURITY DEPOSIT: Means any performance bond, surety bond, money order, letter of credit, certified check, cash, certificate of deposit or similar type of security, in a form acceptable to the City, and submitted to the City pursuant to Section 9-1-11-1012 of this Division.

ESTIMATED DEBRIS GENERATION RATE: Means the rate set forth in the standardized Estimated Debris Generation Rate Table approved by the City for use in estimating the volume or weight of materials identified in a Waste Management Plan. The approved conversion rate shall be set forth in the Manual.

DIVERT OR DIVERSION: Means activities which reduce or eliminate the amount of C&D Material from disposal in a landfill or transformation facility.

DIVERSION REQUIREMENT: Means the diversion of at least 65 percent of the total Construction and Demolition Debris generated by an Applicable Project by reuse or recycling, unless the permit applicant has been granted an exemption pursuant to Section 9-1-11-1016.

EXEMPT PROJECT: Shall have the meaning set forth in Section 9-1-11-1016 of this Division.

PROJECT: Means any activity for which a permit for a building, demolition or other permit is required.

RECYCLING SUMMARY REPORT and RSR: Means a completed Recycling Summary Report form approved by the City and which is the report that shows compliance with the Waste Management Plan.

REUSE: Means the recovery or reapplication of a product or material in a manner. For example, the reuse of products such as light fixtures, doors or used brick is considered source reduction, not recycling.

WASTE MANAGEMENT PLAN and WMP: Means a completed Waste Management Plan form, approved by the City for the purpose of compliance with this Division, submitted by the permit applicant for all Applicable Projects.

9-1-11-1012: DIVERSION OF CONSTRUCTION AND DEMOLITION DEBRIS AND SUBMISSION OF WASTE MANAGEMENT PLAN:

A. DIVERSION REQUIREMENT AND WASTE MANAGEMENT PLAN SUBMISSION. Except as otherwise provided in this Division, each Applicant for a permit required by this Code for an Applicable Project shall complete and submit a Waste Management Plan

("WMP") as part of the application packet for the building permit, unless the project is exempt, as defined below, certifying that the Diversion Requirement will be met. On or after July 1, 2007, no building or demolition permit shall be issued by the Building Department unless the Applicant for a construction or demolition permit for an Applicable Project has submitted to the Building Department an approved Waste Management Plan. The Building Official shall approve the WMP if it complies with complies with the following provision.

B. FORM OF THE WMP.

The completed WMP must be signed by the Applicant and shall indicate all of the following:

1. The site address;
2. The names, addresses, and phone numbers of the property owner and the general contractor;
3. The existing square footage, the proposed square footage, the percentage of increase in project size, or the square footage of the structure to be demolished;
4. The estimated volume or weight of construction and demolition debris, by material type, to be generated on the project site;
5. The estimated volume or weight of construction and demolition debris, by material type, to be diverted to recycling, reuse or salvage;
6. The vendor or facility that the applicant proposes to use to collect or receive that material;
7. The estimated volume or weight of the construction and demolition materials that will be landfilled;
8. Certification that the minimum Diversion Requirement will be met;
9. Such other data and information as may be required by the Building Official;
10. Other information Applicant believes is relevant to determining its efforts to comply with this Division.

C. CALCULATING VOLUME AND WEIGHT OF MATERIAL.

In estimating the volume or weight of materials identified in the WMP, the applicant shall use the Estimated Debris Generation rates approved by the City for this purpose and as indicated in the Construction and Demolition Debris Diversion Manual.

D. CONSTRUCTION AND DEMOLITION DIVERSION SECURITY DEPOSIT.

A refundable deposit shall be paid by the Applicant prior to the approval of any WMP, in an amount specified in the Fee Resolution. The deposit may be refunded without interest, in total, upon proof of satisfaction by the Building Official that no less than the Diversion Requirement generated by the Applicable Project has been diverted from disposal and has been recycled or reused or stored for later reuse or recycling in accordance with Section 9-1-11-1013. The deposit shall be forfeited entirely if Applicant fails to comply with the requirements of this Division. The deposit will not be refunded to any project that began work before obtaining all required permits as determined by the Building Official. The deposit shall be returned no later than 30 days after approval of the RSR.

E. ADMINISTRATIVE FEE.
A non-refundable administrative fee will be collected with the deposit as specified in the Fee Schedule.

9-1-11-1013: REPORTING COMPLIANCE WITH WMP:

A. DOCUMENTATION.
No later than 90 days after the Final Inspection is approved by the City, which date may be extended if City provides Applicant with a letter confirming the extension, the Applicant shall submit to the Building Official documentation that it has met the Diversion Requirement for the project in the form of the Recycling Summary Report (RSR). The Diversion Requirement shall be that the applicant has diverted at least 50 percent of the total construction and demolition debris generated by the project via reuse or recycling. This RSR shall be approved by the Building Official if it includes all of the following:

1. Receipts from a licensed vendor or facility that collected or received each material showing the actual weight or volume of that material;
2. A copy of the previously approved WMP for the project adding the actual volume or weight of each material diverted and landfilled;
3. Any additional information the Applicant believes is relevant to determining its efforts to comply with this Division.

B. WEIGHING OF WASTES.
Applicant shall make reasonable efforts to ensure that all construction and demolition material is measured and recorded using the most accurate method of measurement available. To the extent practical, all construction and demolition material shall be weighed by measurement on scales in compliance with all regulatory requirements for accuracy and maintenance. For materials for which weighing is not practical due to small size or other considerations, a volumetric measurement shall be used. For conversion of volumetric measurements to weight, the applicant shall use the standardized conversion rates approved by the Building Official for this purpose.

9-1-11-1014: WMP MUST BE KEPT ON SITE:
A copy of the WMP shall be kept on the site of the building or work at all times during which the work is in progress and must be made available to the Building Official to allow verification of the provisions of this Division.

9-1-11-1015: VIOLATION OF DIVISION:
If the Applicant fails to comply with the requirements of this Division, the Construction and Demolition Diversion Security shall be retained by the City, and, in addition, the City shall have the right to pursue either criminal prosecution or the appropriate civil action to enforce the requirements of this Code.

9-1-11-1016: EXEMPT PROJECTS:

No Construction and Demolition Debris Security Deposit or a Waste Management Plan shall be required for any of the following:

A. Work for which a building permit or demolition permit is not required by this Code.

B. Residential additions and/or alterations that do not increase the building's conditioned area, volume or size.

C. Non-residential additions and/or alterations less than 500 square feet in area if the permit valuation is less than $200,000.

D. Projects for which only a plumbing permit, electrical permit, or mechanical permit is required.

E. Demolition or construction required to protect public health or safety in an emergency.

F. Projects which may technically fall within this Division, but due to special circumstances, Construction and Demolition debris are minimized as determined by the Building Official.

9-1-11-1017: BUILDING OFFICIAL INTERPRETATIONS:

The Building Official may interpret this Division as needed, publishing any interpretations at the Building Counter, or in the Construction and Demolition Debris Diversion Manual from time to time.

ARTICLE 12. CALIFORNIA REFERENCED STANDARDS CODE

9-1-12 ADOPTION OF 2025 CALIFORNIA REFERENCED STANDARDS CODE:
Part 12 of title 24 of the California Code of Regulations, also known as the “California Referenced Standards Code,” which is part of the California Building Standards Code, 2025 Edition, as adopted by the California Building Standards Commission and the International Code Council, is hereby adopted without local amendments by the City of Burbank and made a part of this Code.

ARTICLE 13. INTERNATIONAL PROPERTY MAINTENANCE CODE

9-1-13-100.1: FINDINGS:
The Council finds and determines as follows:

A. The City has a history and reputation for well-kept properties and the property values, and the general welfare of the community are founded, in part, upon the appearance and maintenance of private properties.

B. There is a need for further emphasis on property maintenance and sanitation in that certain conditions, as described in this article, have been found from place to place throughout the City.

C. The existence of such conditions as described in this article is injurious and inimical to the public health, safety, and welfare of the residents of the City and contributes substantially and increasingly to the deterioration of neighborhoods.

D. Unless corrective measures are undertaken to alleviate such existing conditions and assure the avoidance of future problems in this regard, the public health, safety, and general welfare, and specifically the social and economic standards of the community, will be depreciated.

E. The abatement of such conditions will improve the general welfare and image of the City.

F. The abatement procedures set forth in this article are reasonable and afford due process to all affected persons.

G. The uses and abuses of property as described in this article reasonably relate to the proper exercise of police power to protect the health, safety, and general welfare of the public.

9-1-13-100.2: ADOPTION OF 2024 INTERNATIONAL PROPERTY MAINTENANCE CODE:

A. ADOPTION OF CODE.

The 2024 Edition of the International Property Maintenance Code (“IPMC”), as published by the International Code Council, together with the appendix thereof, with the exception of Sections 503.3 and 602.4, is hereby adopted by the City of Burbank and made a part of this Code, with certain amendments, additions, and deletions as stated in this Article.

B. APPLICABILITY TO GOVERNMENT BUILDINGS.

The provisions of this article shall apply to all buildings, structures, or land owned, operated, or controlled by any governmental entity or political subdivision, agency, or district thereof, but shall not apply to buildings, structures, or land exempted by the provisions of Section 105.2.2 of the California Building Code.

C. NUMBERING OF CODE.

In order to provide consistency between this article and the provisions of the International Property Maintenance Code, the section, subsection, and paragraph numbers or designations of the California Property Maintenance Code shall be retained in this article and shall be preceded by the prefix "9-1-13-". Such prefix refers to this title, chapter and article of the Burbank Municipal Code.

D. WARNING AND DISCLAIMER.
The degree of protection required by this chapter is considered reasonable for regulatory purposes and is based on scientific and engineering considerations. Accidents and disasters can and will occur on rare occasions. Risks may be increased by man-made or natural causes. This article does not imply that work done pursuant to this article or occupations permitted by this article will be free from damages. This article shall not create liability on the part of the City, any officer or employee thereof, for any damages that result from reliance on this article, or any administrative decision lawfully made thereunder.

9-1-13-101.1: TITLE:
Section 101.1 of Chapter 1 of the IPMC is amended and restated as follows:

> **"101.1 Title.**
> These regulations shall be known as the City of Burbank Property Maintenance Code of the City of Burbank, and hereinafter in this article referred to as "this code.""

9-1-13-102.3: APPLICATION OF OTHER CODES:
Section 102.3 of Chapter 1 of the IPMC is amended and restated as follows:

> "**102.3 Application of other codes.**
> Repairs, additions or alterations to a structure, or changes of occupancy, shall be done in accordance with the procedures and provisions of the California Building Code, California Residential Code, California Energy Code, California Plumbing Code, California Electrical Code, California Mechanical Code, the Burbank Municipal Code, and all codes adopted or enforced by the City."

9-1-13-103.1: AUTHORITY HAVING JURISDICTION:
Section 103.1 of Chapter 1 of the IPMC is amended and restated as follows:

> **"103.1 Authority having jurisdiction.**
> The officer or other designated authority charged with the administration and enforcement of this code shall be the "Building Official" or a duly authorized representative. "Building Official" shall be synonymous with the term "Assistant Community Development Director/Building Official" or "Building Director" or "Code Official" of the City."

9-1-13-103.5: FEES:
Section 103.5 of Chapter 1 of the IPMC is amended and restated as follows:

"**103.5 Fees.**
Fees shall be assessed in accordance with the provisions of this section and as set forth in the Burbank Fee Resolution."

9-1-13-104.1.1: GENERAL DUTIES AND POWERS:
The following section is added to Chapter 1 of the IPMC to read as follows:

"**104.1.1 General duties and powers.**
A. RESPONSIBILITY FOR ENFORCEMENT.
The Building Official shall be responsible for the administration and enforcement of this article. The Building Official shall have the authority to render interpretations of this code and to adopt policies and procedures in order to clarify the application of its provisions. Such interpretation, policies and procedures shall be in compliance with the intent and purpose of this code. Such policies and procedures shall not have the effect of waiving requirements specifically provided for in this code. For purposes of declaring and abating fire hazards pursuant to the provisions of this article, the Building Official is also authorized to perform the duties imposed on the Fire Chief and Fire Marshall pursuant to the provisions of the California Fire Code as adopted and amended by this jurisdiction.

B. ENFORCEMENT.
Enforcement of this article may be accomplished by the Building Official in any manner authorized by law. The procedures set forth in this article shall not be exclusive and shall not in any manner limit or restrict the City from enforcing other City ordinances or abating public nuisances in any other manner provided by law."

9-1-13-104.3.1: ENTRY ON PRIVATE PROPERTY:
The following section is added to Chapter 1 of the IPMC to read as follows:

"**104.3.1 Entry on private property.**
The Building Official may enter upon private property to abate the nuisance pursuant to the provisions of this article. No person shall obstruct, impede, or interfere with any officer, employee, contractor or authorized representative of the City whenever such person is engaged in the work of abatement, pursuant to the provisions of this article, or in performing any necessary act preliminary to or incidental to such work as authorized or directed pursuant to this article."

9-1-13-106.1.1: DUTY TO REPORT VIOLATIONS:
The following section is added to Chapter 1 of the IPMC to read as follows:

"**106.1.1 Duty to report violations.**
The Fire Chief, City Planner, Public Works Director and all other department heads shall make reports in writing to the Building Official of any building or structure which is believed to be a dangerous or substandard building within the terms of this article whenever the facts thereof shall come to the attention of such officer."

9-1-13-106.5.1: PERFORMANCE OF ABATEMENT:
The following section is added to Chapter 1 of the IPMC to read as follows:

"**106.5.1 Performance of abatement.**
Abatement of the nuisance may in the discretion of the Building Official be performed by City forces or by a contractor retained pursuant to the provisions of this Code."

9-1-13-106.5.2: PROCEDURES FOR ABATEMENT OF VIOLATIONS OR UNLAWFUL CONDITIONS:
The following section is added to Chapter 1 of the IPMC to read as follows:

"106.5.2 Procedures for abatement of violations or unlawful conditions.
A. NOTICE AND ORDER OF BUILDING OFFICIAL.
Whenever the Building Official has inspected or caused to be inspected any property and has found and determined that conditions constituting a public nuisance exist thereon, the Building Official may use the procedures set forth in this section for the abatement of such nuisance.

1. The Building Official shall issue a notice and order and mail a copy of such notice and order to the landowner and the person, if other than the landowner, occupying or otherwise in real or apparent charge and control of the property. The notice and order shall contain:

    a. The street address and a legal description sufficient for identification of the property on which the condition exists.
    b. A statement that the Building Official has determined that a public nuisance is being maintained on the property with a brief description of the conditions which render the property a public nuisance.
    c. An order to secure all appropriate permits and to physically commence, within ten (10) days from the date of service of the notice and order, and to complete within thirty (30) days from such date, the abatement of the described conditions.
    d. A statement advising that the disposal of material involved in public nuisances shall be carried forth in a legal manner.
    e. A statement advising that if the required work is not commenced within the time specified, the Building Official will proceed to cause the work to be done, and bill the persons named in the notice for the abatement costs and/or assess the costs against the property.
    f. A statement advising that any person having any interest or record title in the property may appeal from the notice and order or any action of the Building Official within ten (10) days from the date of service of the notice and order.
    g. A statement advising that the notice and order will be recorded against the property in the Office of the County Recorder.

2. The notice and order, and any amended notice and order, shall be mailed by first class mail, postage prepaid, to each person as required pursuant to the provisions of Subsection (a) of this section at the address as it appears on the last equalized assessment roll of the County or as known to the Building Official. The address of owners shown on the assessment roll shall be conclusively deemed to be the proper address for the purpose of mailing such notice. The failure of the Building Official to make or attempt service on any person required in this section to be served shall not invalidate any proceedings hereunder as to any other person duly served. Service by mail in the manner herein provided shall be effective on the date of mailing. The failure of any person entitled to receive such notice shall not affect the validity of any proceedings taken under this article.

3. Proof of service of the notice and order shall be documented at the time of service by a declaration under penalty of perjury executed by the person effecting service, declaring the time and manner in which service was made.

4. At the time the notice and order is served, the Building Official shall file in the Office of the County Recorder a certificate legally describing the property and certifying that a public nuisance exists on the property and the owner has been so notified. The Building Official shall file a new certificate with the County Recorder that the nuisance has been abated whenever the corrections ordered shall have been completed so that there no longer exists a public nuisance on the property described in the certificate; or the notice and order is rescinded by the Board of Building and Fire Code Appeals upon appeal; or whenever the City abates the nuisance and the abatement costs have been paid.

B. EXTENSION OF TIME TO PERFORM WORK.
Upon receipt of a written request from any person required to comply with the order, the Building Official may grant an extension of time within which to complete said abatement, if the Building Official determines that such an extension of time will not create or perpetuate a situation imminently dangerous to life or property. The Building Official shall have the authority to place reasonable conditions on any such extensions.

C. APPEAL.
Any person aggrieved by the action of the Building Official in issuing a notice and order pursuant to the provisions of this article may appeal to the Board of Building and Fire Code Appeals in accordance with the provisions of Article 13 of this chapter. If no appeal is filed within the time prescribed, the action of the Building Official shall be final."

9-1-13-106.5.3: ACCOUNT OF ABATEMENT COSTS:
The following section is added to Chapter 1 of the IPMC to read as follows:

"**106.5.3 Account of abatement costs.**
The Building Official shall keep an itemized account of the costs incurred by the City in the abatement of any public nuisance under this article. Upon completion of the abatement work, the Building Official shall prepare a report specifying the work done, the itemized costs of the work for each property, including direct and indirect costs, a description of the real property, and the names and addresses of the persons entitled to service pursuant to Section 106.5.2. Any such report may include costs on any number of properties, whether or not contiguous to each other. Each person named in the notice shall be jointly and severally liable for such abatement costs and the amount of such costs shall be a debt owed to the City."

9-1-13-106.5.4: PROCEDURE FOR SPECIAL ASSESSMENT:
The following section is added to Chapter 1 of the IPMC to read as follows:

"106.5.4 Procedure for special assessment.
A. CITY CLERK.
When any charges levied pursuant to this article remain unpaid for a period of sixty (60) days or more after the date on which they were billed, the Building Official, in his discretion, may forward the abatement costs report described in Section 106.5.3 to the City Clerk.

B. HEARING NOTICE.
Upon receipt of the abatement costs report, the Clerk shall fix a time and place for hearing and passing upon the report. The Clerk shall cause notice of the amount of the proposed assessment, shown in this report, to be given in the manner and to the persons specified in Section 106.5.2. Such notice shall contain a description of the property sufficient to enable the persons served to identify it, and shall specify the day, hour, and place when the Council will hear and pass upon the report, together with any objections or protests which may be raised by any landowner liable to be assessed for the costs of such abatement. Notice of the hearing shall be given not less than fifteen days prior to the time fixed by the Clerk for the hearing, and shall also be published once, at least fifteen (15) days prior to the date of the hearing, in a newspaper of general circulation published in the County of Los Angeles.

C. PROTEST.
Any interested person may file a written protest with the City Clerk at any time prior to the time set for the hearing on the report of the Building Official. Each such protest shall contain a description of the property in which the person signing the protest is interested and the grounds of such protest. The City Clerk shall endorse on every such protest the date and time of filing, and shall present such protest to the Council at the time set for hearing."

9-1-13-106.5.5: HEARING ON PROPOSED ASSESSMENT:
The following section is added to Chapter 1 of the IPMC to read as follows:

"**106.5.5 Hearing on proposed assessment.**
Upon the day and hour fixed for the hearing the Council shall consider the report of the Building Official, together with any protests which have been filed with the City Clerk. The Council may make such revision, correction, or modification in the report as it may deem just, and when the Council is satisfied with the correctness of the assessment, the report, and proposed assessment, as submitted or as revised, corrected, or modified, shall be confirmed. The decision of the Council on the report and the assessment and on all protests shall be final and conclusive. The Council may adjourn the hearing from time to time."

9-1-13-106.5.6: CONTEST OF ASSESSMENT:
The following section is added to Chapter 1 of the IPMC to read as follows:

"**106.5.6 Contest of assessment.**
The validity of any assessment levied under the provisions of this article shall not be contested in any action or proceeding unless such action or proceeding is commenced within thirty (30) days after the assessment is confirmed by the Council."

9-1-13-106.5.7: NOTICE OF LIEN: FORM AND CONTENTS:
The following section is added to Chapter 1 of the IPMC to read as follows:

"**106.5.7 Notice of lien: form and contents.**
A. NOTICE OF LIEN.
Immediately upon the confirmation of the assessment by the Council, the Building Official shall execute and file in the Office of the County Recorder a certificate in substantially the following form:

NOTICE OF LIEN

Pursuant to the authority vested in the Building Official by the provisions of Article 13, Chapter 1, Title 9 of the Burbank Municipal Code, said Building Official on or about the ____ day _____ of , 20____, caused the abatement of a nuisance on real property, and the Council for the City of Burbank, on the ____ day _____ of, 20____, assessed the cost of such abatement upon said real property and the same has not been paid nor any part thereof, and the City of Burbank does hereby claim a lien on said real property for the net expense of the doing of said abatement in the amount of $_____ , and this amount shall be a lien upon said real property until the sum has been paid in full and discharged of record. The real property hereinbefore mentioned, and upon which a lien is claimed, is that certain parcel of land in the City of Burbank, County of Los Angeles, State of California, and particularly described as follows:

(DESCRIPTION)

Dated: This ____ day _____ of, 20____.

BUILDING OFFICIAL OF THE CITY OF BURBANK

(ACKNOWLEDGEMENT)

B. RECORDATION.
Immediately upon the recording of the notice of lien the assessment shall constitute a lien on the real property assessed. Such lien shall, for all purposes, be upon parity with the lien of state and local taxes."

9-1-13-106.5.8: COLLECTION WITH REGULAR TAXES PROCEDURE:
The following section is added to Chapter 1 of the IPMC to read as follows:

"106.5.8 Collection with regular taxes procedure.
A. ASSESSMENT BOOK.
The notice of lien, after recording, shall be delivered to the Auditor of Los Angeles County, who shall enter the amount on the county assessment book opposite the description of the particular property and the amount shall be collected together with all other taxes thereon against the property. The notice of lien shall be delivered to the Auditor before the date fixed by law for the delivery of the assessment book to the County Board of Equalization.

B. COLLECTION.
Thereafter the amount set forth in the notice of lien shall be collected at the same time and in the same manner as ordinary City taxes are collected and shall be subject to the same penalties and interest and to the same procedure under foreclosure and sale in case of delinquency as provided for ordinary City taxes. All laws applicable to the levy, collection and enforcement of City taxes are hereby made applicable to such assessment.

C. REFUNDS.
The Council may order a refund of all or part of a tax paid pursuant to this article if it finds that all or part of the tax has been erroneously levied. A tax or part thereof shall not be refunded unless a claim is filed with the City Clerk on or before November 1 after the tax became due and payable. The claim shall be verified by the person who paid the tax, or the legal representative of such person."

9-1-13-106.6: REMEDIES OF PRIVATE PARTIES:
The following section is added to Chapter 1 of the IPMC to read as follows:

"**106.6 Remedies of private parties.**
The provisions of this article shall in no way adversely affect the right of the owner, lessee, or occupant of any such lot to recover all costs and expenses required by this article from any person causing such nuisance."

9-1-13-107.1.1: EXTENSION OF TIME OF NOTICE AND ORDER:

The following section is added to Chapter 1 of the IPMC to read as follows:

"**107.1.1 Extension of time of notice and order.**
The Building Official shall have discretionary power, upon receipt of an application from a person required to comply with a notice and order and a written agreement binding such person to comply with said order. The Building Official's authority to extend time is limited to the physical repair, rehabilitation, or demolition of the premises and will not in any way affect or extend the time to appeal any notice and order."

9-1-13-107.3.1: RECORDATION:
The following section is added to Chapter 1 of the IPMC to read as follows:

"107.3.1 Recordation.
At the time the notice and order is served, the Building Official shall file in the Office of the County Recorder a certificate legally describing the property and certifying that the building is a dangerous building and the owner has been so notified, or set aside, by the Board upon appeal, so that the building no longer exists as a dangerous building on the property described in the certificate, the Building Official shall file a new certificate with the County Recorder that the building has been demolished or removed or is no longer dangerous."

9-1-13-108.6.1: ADDITIONAL PROCEEDINGS FOR ABATEMENT OF IMMINENTLY DANGEROUS PUBLIC NUISANCES:
The following section is added to Chapter 1 of the IPMC to read as follows:

"**108.6.1 Additional proceedings for abatement of imminently dangerous public nuisances.**
Whenever the Building Official determines that a public nuisance is so imminently dangerous to life or adjacent property that such condition must be immediately corrected, or isolated, the Building Official may institute the following procedures.

A. NOTICE.
The Building Official shall attempt to make contact through a personal interview, or by telephone with the landowner or the person, if any, occupying or otherwise in real or apparent charge and control thereof. In the event contact is made, the Building Official shall notify such person, or persons, of the danger involved and require that such condition be immediately removed, repaired or isolated so as to preclude harm to any person or property.

B. ABATEMENT.
In the event the Building Official is unable to make contact as hereinabove noted, or if the appropriate persons, after notification by the Building Official, do not take action as specified by such official, within seventy-two (72) hours, then the Building Official may, with the approval of the City Manager, take all steps deemed

necessary to remove or isolate such dangerous condition, or conditions, with the use of City forces or a contractor retained pursuant to the provisions of this Code.

C. COST.
The Building Official shall keep an itemized account of the costs incurred by the City in removing or isolating such condition, or conditions. Such costs may be recovered in the same manner that abatement costs are recovered pursuant to this article."

9-1-13-109.5.1: PROCEDURE FOR ASSESSMENT OF COST OF EMERGENCY REPAIRS:
The following section is added to Chapter 1 of the IPMC to read as follows:

"109.5.1 Procedure for assessment of cost of emergency repairs.
A. FILING OF REPORT.
The Building Official shall keep an itemized account of the net expense involved in the repair or demolition of a building or structure. Upon the completion of the repair or demolition, the Building Official shall prepare and file with the City Clerk in duplicate a report specifying the work done.

B. REPORT TRANSMITTED TO COUNCIL AND SETTING FOR HEARING.
Upon receipt of the report, the City Clerk shall present it to the Council for consideration. The Council shall cause notice of the cost of the repair or demolition to be given in the manner and to the persons specified in Section 107 of the International Property Maintenance Code. Such notice shall specify the day, hour and place when the Council will hear and pass upon the report, together with any objections or protests which may be raised by any property owner liable to be assessed for the cost of such repair or demolition and any other interested persons. Notice of hearing provided by this subsection shall be published at least 10 days prior to the date of hearing by one insertion in a newspaper of general circulation published in the County of Los Angeles.

C. PROTESTS AND OBJECTIONS: HOW MADE.
Any person interested and affected by the proposed assessment may file written protests or objections with the City Clerk at any time prior to the time set for the hearing.

D. HEARING OF PROTESTS.
Upon the day and hour fixed for the hearing the Council shall hear and pass upon the report of the Building Official, together with any objections or protests which may be raised by any of the property owners liable to be assessed for the cost of the repair or demolition and any other interested persons.

E. ASSESSMENT TO BE TRANSMITTED TO BUILDING OFFICIAL.
Upon the confirmation of the assessment, the City Clerk shall transmit the report as modified to the Building Official.

F. RECORDATION OF ASSESSMENT.
The Building Official shall record the assessment as confirmed in a suitable book to be kept for that purpose in his office and shall append thereto his certificate of the date of such recording.

G. ASSESSMENT LIEN.
Immediately upon the recording of the assessment, the cost so assessed shall constitute a lien on the real property described in the report. Such lien shall for all purposes be on parity with the lien of state, county, and municipal taxes. All such assessments remaining unpaid for 30 days from the date of recording shall become delinquent and bear interest at the rate of one percent per month computed on the date of delinquency and on the first day of each month thereafter. The lien shall continue until the amount thereof and interest are paid or until it is discharged of record.

H. FILING OF LIEN: FORM AND CONTENTS.
The Building Official shall file in the Office of the County Recorder of Los Angeles County a certificate substantially in the following form, to wit:

NOTICE OF LIEN

Pursuant to the authority vested in the Building Official of the City of Burbank, California, by the provisions of Article 13, Chapter 1, Title 9 of the Burbank Municipal Code, said Building Official, on the ____ day of _____, 20__ , caused the building or structure on the real property hereinafter described to be repaired or demolished (as the case may be) in order to abate a nuisance on said real property, and the Council of the City of Burbank, on the ____ day of _____ , 20__ , assessed the cost of such repair or demolition (as the case may be) upon the real property hereinafter described, and the same has not been paid nor any part thereof, and the City does hereby claim a lien on said real property for the net expense of the doing of said repairs or demolition (as the case may be) in the sum of $_____ , and the amount shall be a lien upon said real property for the net expense of the doing of said repairs of demolition (as the case may be) in the sum of $_____ , and the amount shall be a lien upon said real property until the said sum, with interest at the rate of one percent per month computed upon the date of delinquency and on the first day of each month subsequent to the expiration of 30 days from the ____ day of _____ , (insert day of recording of assessment), has been paid in full and discharged of record. The real property upon which a lien is claimed is that certain parcel of land lying and being in the City of Burbank, County of Los Angeles, State of California, and particularly described as follows, to wit:

(DESCRIPTION)

Dated this _____ day _____ of , 20_____,

BUILDING OFFICIAL

(ACKNOWLEDGEMENT)

I. FORECLOSURE.
If the sum assessed is not paid to the Building Official within 30 days after the date of the recording of the assessment, the Building Official shall report such nonpayment to the Council, and the Council may instruct the City Attorney to bring an action in the name of the City to foreclose the lien of the assessment."

9-1-13-110.3.1: PROCEDURE FOR ASSESSMENT OF COST OF DEMOLITION:
The following section is added to Chapter 1 of the IPMC to read as follows:

"110.3.1 Procedure for assessment of cost of demolition.
The procedure for assessment of cost of demolition shall comply with Section 109 of the California Building Code."

9-1-13-111.1: APPLICATION FOR APPEAL:
Section 111.1 of Chapter 1 of the IPMC is amended and restated as follows:

"111.1 Application for appeal.
Any person, directly affected by a decision of the Building Official or a Notice or Order shall have the right to appeal to the Board of Building and Fire Code Appeals in accordance with Section 9-1-1-113 of the Burbank Municipal Code."

9-1-13-111.2: MEMBERSHIP OF THE BOARD:
Section 111.2 (including subsections 111.2.1 through 111.2.5) of Chapter 1 of the IPMC is amended and restated as follows:

"**111.2 Membership of the board.**
Membership of the Board of Building and Fire Code Appeals shall comply with Article 4, Title 2 Chapter 1 of the Burbank Municipal Code."

9-1-13-111.3: NOTICE OF MEETING:
Section 111.3 of Chapter 1 of the IPMC is amended and restated as follows:

"**111.3 Notice of meeting.**
The Board shall meet in accordance with the procedures defined in Section 9-1-1-113."

9-1-13-111.4.1.2: ADDITIONAL INSPECTIONS AND REPORTS:
The following section is added to Chapter 1 of the IPMC to read as follows:

"111.4.1.2 Additional inspections and reports.

Whenever in the course of any proceedings taken hereunder the Board shall have cause to require additional evidence, the Board may request that the same be inspected by any officer of the City who may provide information pertinent to the proceedings. The officer to which such request is directed shall cause the building or structure to be inspected and a report thereof in writing shall be transmitted to the Board."

9-1-13-111.9: DUTIES OF THE CITY ATTORNEY:
The following section is added to Chapter 1 of the IPMC to read as follows:

"**111.9 Duties of the city attorney.**
The City Attorney shall:

A. APPEARANCE AT BOARD MEETINGS.
Appear at the request of the Board at any hearing before that Board in regard to dangerous buildings or substandard buildings.

B. TAKING LEGAL ACTION.
Take such legal action as is necessary to carry out the terms and provisions of this article."

9-1-13-112.4: FAILURE TO COMPLY:
Section 112.4 of Chapter 1 of the IPMC is amended and restated as follows:

"**112.4 Failure to comply.**
Any person who shall continue any work after having been served a stop work order, except such work as that person is directed to perform to remove a violation or unsafe condition, shall be liable to pay a fee as set forth in the Burbank Fee Resolution."

9-1-13-201.3: TERMS DEFINED IN OTHER CODES:
Section 201.3 of Chapter 2 of the IPMC is amended and restated as follows:

"**201.3 Terms defined in other codes.**
Where terms are not defined in this code and are defined in the California Building Code, California Residential Code, California Energy Code, California Green Building Standards Code, California Plumbing Code, California Electrical Code or California Mechanical Code, such terms shall have the meanings ascribed to them as stated in those codes."

9-1-13-202: DEFINITIONS:
Section 202 of Chapter 2 of the IPMC is amended by adding the following definitions:

"ATTRACTIVE NUISANCE: Shall mean any condition, instrumentality, or machine which is unsafe and unprotected and thereby dangerous to young children by reason of their inability to appreciate the peril therein, and which may reasonably

be expected to attract young children to the premises and risk injury by playing with, in, or on it.

LANDOWNER: Shall mean the person to whom land is assessed as shown on the last equalized assessment roll of the county.

PARKWAY: Shall mean that portion of a street right-of-way which lies between the property line and the outside edge of a gutter or gutter lip, including a driveway approach. Where no curb exists, “parkway” shall mean the area of property from the property line to the edge of the pavement.

PROPERTY: Shall mean any lot or parcel of land. For the purposes of this definition, "lot or parcel of land" shall include any alley, sidewalk, parkway, or unimproved public easement abutting such lot or parcel of land.”

9-1-13-301.2.1: BUILDINGS:
The following section is added to Chapter 3 of the IPMC to read as follows:

“**301.2.1 Buildings.**
It shall be unlawful for any landowner or person leasing, occupying, or having charge or possession of any property in the City to maintain on such property any of the following:

1. Buildings which are abandoned, partially destroyed, or partially constructed or incomplete after building permits have expired.
2. Buildings with deteriorating or peeling paint that allows the exterior building coverings to deteriorate or to permit the effects of sun and water penetration so as to encourage decay, dry rot, warping, cracking, or any other form of deterioration.
3. Broken windows, doors, attic vents, and under floor vents.
4. Building exteriors (walls, roofs, appendages, and other architectural and structural elements), and site improvements (walls, fences, driveways, or walkways, and other site elements) which are cracked, broken, defective, deteriorated, in disrepair, or defaced due to any writing, inscription, figure, scratches, or other markings commonly referred to as "graffiti.""

9-1-13-301.2.2: PUBLIC NUISANCE:
The following section is added to Chapter 3 of the IPMC to read as follows:

“**301.2.2 Public nuisance.**
It is hereby declared a public nuisance for any landowner or person leasing, occupying, directly controlling, or having possession of any property in this City to maintain any condition described in Section 302.4 and Section 308 of this Code or to maintain any attractive nuisance.”

9-1-13-302.4: WEEDS:
Section 302.4 of Chapter 3 of the IPMC is amended and restated as follows:

"**302.4 Weeds.**
A. It shall be unlawful for any landowner, and person leasing, occupying, or having charge or possession of any property in the City to keep, maintain, or deposit on such property any of the following:

1. The following weeds:
   a. Weeds which bear seeds of a downy or wingy nature.
   b. Sagebrush, chaparral, and any brush or weeds which attain such large growth as to become, when dry, a menace to adjacent property.
   c. Weeds which are otherwise noxious or dangerous.
   d. Puncture vines and tumble weed.
   e. Poison oak and poison ivy when the conditions of growth are such as to constitute a menace to the public health.

2. Dry grass and grass likely to become dry; stubble; brush; litter; or other flammable material which endangers the public safety creating a fire hazard, as defined in the California Fire Code.

3. Dead, decayed, or hazardous trees or other vegetation; residue from a fire; or demolition such as concrete or brick foundations and flat work; and overgrown vegetation which is unsightly and likely to harbor rats or vermin, and which constitute an unsightly appearance, a fire hazard, or are dangerous to public health and welfare.

B. Upon failure of the owner or agent having charge of a property to cut or destroy weeds after service of a Notice of Violation, the owner or agent shall be subject to further enforcement in accordance with the provisions of this Article."

9-1-13-302.9: DEFACEMENT OF PROPERTY:
Section 302.9 of Chapter 3 of the IPMC is amended and restated as follows:

"302.9: Defacement of property.
See Article 3, Title 9, Chapter 3, of the Burbank Municipal Code for property maintenance requirements for defacement of property."

9-1-13-303.2: ENCLOSURES AND SAFETY DEVICES:
Section 303.2 of Chapter 3 of the IPMC is amended and restated as follows:

"**303.2: Enclosures and safety devices.**
Enclosures and safety devices shall comply with the provisions of the California Building Code. No existing pool, spa or hot tub enclosure or safety device shall be removed, replaced or changed in a manner that reduces its effectiveness as a safety barrier."

9-1-13-304.1.1: UNSAFE CONDITIONS:
Section 304.1.1 of Chapter 3 of the IPMC is amended by replacing the phrase "International Existing Building Code" with "California Existing Building Code", "International Building Code" with "California Building Code", and "International Residential Code" with "California Residential Code".

9-1-13-305.1.1: UNSAFE CONDITIONS:
Section 305.1.1 of Chapter 3 of the IPMC is amended by replacing the phrase "International Existing Building Code" with "California Existing Building Code", "International Building Code" with "California Building Code", and "International Residential Code" with "California Residential Code".

9-1-13-306.1.1: UNSAFE CONDITIONS:
Section 306.1.1 of Chapter 3 of the IPMC is amended by replacing the phrase "International Existing Building Code" with "California Existing Building Code", "International Building Code" with "California Building Code", and "International Residential Code" with "California Residential Code".

9-1-13-308.1.1: ACCUMULATION OF RUBBISH AND GARBAGE:
The following section is added to Chapter 3 of the IPMC to read as follows:

"**308.1.1 Accumulation of rubbish and garbage.**
It shall be unlawful for any landowner, and person leasing, occupying, or having charge or possession of any property in the City to keep, maintain, or deposit on such property any of the following:

1. Rubbish or junk, including, but not limited to, refuse, garbage, scrap metal or lumber, concrete, asphalt, tin cans, tires, and piles of earth.
2. Abandoned, discarded, or unused furniture, stoves, sinks, toilets, cabinets, or other fixtures or equipment which are not stored within an entirely enclosed space.
3. Combustible material likely to become easily ignited or debris resulting from any fire and which constitutes a fire hazard, as defined in the California Fire Code.
4. Inoperative, abandoned, or dismantled motor vehicles, trailers, campers, and boats which are not stored within an entirely enclosed space or carport.
5. Trash, garbage, or refuse cans, bins, boxes or other such containers stored in front or side yards visible from public streets."

9-1-13-401.3: ALTERNATIVE DEVICES:
Section 401.3 of Chapter 4 of the IPMC is amended and restated as follows:

"**401.3 Alternative devices.**
In lieu of the means for natural light and ventilation herein prescribed, artificial light or mechanical ventilation complying with the California Building Code or the California Residential Code shall be permitted."

9-1-13-502.5: PUBLIC TOILET FACILITIES:
Section 502.5 of Chapter 5 of the IPMC is amended and restated as follows:

> "**502.5: PUBLIC TOILET FACILITIES.**
> Public toilet facilities shall be maintained in a safe sanitary and working condition in accordance with the California Plumbing Code. Except for periodic maintenance or cleaning, public access and use shall be provided to the toilet facilities at all times during occupancy of the premises."

9-1-13-505.1: GENERAL - WATER SYSTEM:
Section 505.1 of Chapter 5 of the IPMC is amended and restated as follows:

> "**505.1 General - water system.**
> Every sink, lavatory, bathtub or shower, drinking fountain, water closet or other plumbing fixture shall be properly connected to either a public water system or to an approved private water system. All kitchen sinks, lavatories, laundry facilities, bathtubs and showers shall be supplied with hot or tempered and cold running water in accordance with the California Plumbing Code."

9-1-13-602.2: RESIDENTIAL OCCUPANCIES:
Section 602.2 of Chapter 6 of the IPMC is amended and restated as follows:

> **"602.2 Residential occupancies.**
> Dwellings shall be provided with heating facilities capable of maintaining a room temperature in accordance with the code under which the building was constructed."

9-1-13-602.3: HEAT SUPPLY:
Section 602.3 of Chapter 6 of the IPMC is amended and restated as follows:

> "**602.3 Heat supply.**
> Every owner and operator of any building who rents, leases or lets one or more dwelling units or sleeping units on terms, either expressed or implied, to furnish heat to the occupants thereof shall supply heat to maintain a temperature in accordance with the code under which the building was constructed."

9-1-2-604.2: SERVICE - ELECTRICAL FACILITIES.
Section 604.2 of Chapter 6 of the IPMC is amended and restated as follows:

> "**604.2: Service - electrical facilities.**
> The size and usage of appliances and equipment shall serve as a basis for determining the need for additional facilities in accordance with the California Electrical Code. Dwelling units shall be served with an electrical service in accordance with the code under which the building was constructed."

9-1-13-604.3.1.1: ELECTRICAL EQUIPMENT:
Section 604.3.1.1 of Chapter 6 of the IPMC is amended by replacing the phrase "International Building Code" with "California Building Code, California Residential Code, and the California Electrical Code."

9-1-13-604.3.2.1: ELECTRICAL EQUIPMENT:
Section 604.3.2.1 of Chapter 6 of the IPMC is amended by replacing the phrase "International Building Code" with "California Building Code, California Residential Code, and the California Electrical Code."

9-1-13-605.2: RECEPTACLES:
Section 605.2 of Chapter 6 of the IPMC is amended and restated as follows:

> "**605.2 Receptacles.**
> Every habitable space in a dwelling shall contain receptacle outlets in accordance with the code under which the building was constructed."

9-1-13-605.3: LUMINAIRES:
Section 605.3 of Chapter 6 of the IPMC is amended and restated as follows:

> "**605.3 Luminaires.**
> Every public hall, interior stairway, toilet room, kitchen, bathroom, laundry room, boiler room and furnace room shall contain luminaires in accordance with the code under which the building was constructed."

9-1-13-702.1: GENERAL:
Section 702.1 of Chapter 7 of the IPMC is amended and restated as follows:

> "**702.1 General.**
> A safe, continuous and unobstructed path of travel shall be provided from any point in a building or structure to the public way. Means of egress shall be maintained in accordance with the code under which the building was constructed."

9-1-13-702.3: LOCKED DOORS:
Section 702.3 of Chapter 7 of the IPMC is amended and restated as follows:

> "**702.3 Locked doors.**
> All means of egress doors shall be readily openable from the side from which egress is to be made without the need for keys, special knowledge or effort, and shall be maintained in accordance with code under which the building was constructed."

9-1-13-704: FIRE PROTECTION SYSTEMS:
See Title 9 Chapter 1 Article 9 of the Burbank Municipal Code for smoke alarm, power source, and interconnection requirements in existing Group R occupancies.

ARTICLE 16. SEISMIC RETROFIT STANDARDS

DIVISION 1. UNREINFORCED MASONRY ORDINANCE

9-1-16-100: ADOPTION OF CODE:
Appendix A - Chapter A1 of Part 10 of Title 24 of the California Code of Regulations, also known as the “California Existing Building Code,” which is part of the California Building Standards Code, 2025 Edition, is hereby adopted without local amendments by the City of Burbank and made a part of this Code for promoting public welfare and safety by reducing the risk of earthquake-induced damage to unreinforced masonry bearing wall buildings.

DIVISION 2. EARTHQUAKE HAZARD REDUCTION IN EXISTING REINFORCED CONCRETE WALL AND/OR REINFORCED MASONRY WALL BUILDINGS WITH FLEXIBLE DIAPHRAGMS

9-1-16-200: EARTHQUAKE HAZARD REDUCTION IN EXISTING REINFORCED CONCRETE WALL AND/OR REINFORCED MASONRY WALL BUILDINGS WITH FLEXIBLE DIAPHRAGMS:

9-1-16-200.1: PURPOSE:
The City of Burbank is within California Building Code Seismic Zone 4. This is the highest risk for damaging earthquakes. Approximately 30 percent of the City is categorized as an "Active Fault Near-Source Zone" (ICBO, California Department of Conservation-Division of Mines and Geology). The Near-Source Zone is an area within two kilometers of an active fault (Class A or B) capable of producing a major earthquake. The Verdugo Fault and the Hollywood Fault are the near-source influences for the City (both are Class B faults). A Near-Source Zone is subject to the largest and most damaging ground acceleration and velocity produced in a seismic event. The resulting structural damage in a near-source zone is generally severe.

The 1994 Northridge Earthquake caused considerable damage to buildings and structures located in the City of Burbank. Experts expect a massive earthquake on one of the faults under the City within the next 30 years and several earthquakes similar in intensity to the Northridge Earthquake during that same period.

The damage to buildings could expose occupants of these buildings to a potential life-safety risk in future earthquakes, and the City of Burbank must protect its population and property and enforce the Building Code so as to provide effective protection to all its citizens.

Recent earthquakes, including the 1994 Northridge event, have demonstrated the deficiencies in the structural performance of reinforced concrete wall and/or reinforced masonry wall buildings with flexible diaphragms. The 1997 California Building Code contained revisions to the seismic requirements for new construction, but it did not address the existing "legal nonconforming" buildings.

Pre-1976 UBC reinforced concrete wall and/or reinforced masonry wall buildings with flexible diaphragms are considered potentially hazardous and prone to significant damage, including possible roof collapse, in moderate to major earthquakes. These buildings may lack adequate strength in the anchorage system of the wall to the roof and floor diaphragms.

The purpose of this section is to promote public safety and welfare by reducing the risk of death or injury that may result from the effects of earthquakes on reinforced concrete wall and/or reinforced masonry wall buildings with flexible diaphragms designed under the building codes in effect prior to the adoption of the 1976 UBC. Such buildings have been categorized, based on past earthquakes, as being potentially hazardous and prone to significant damage, including possible collapse, in a moderate to major earthquake.

The provisions of this section are minimum standards for structural seismic resistance established primarily to reduce the risk of life loss or injury on both subject and adjacent properties and will not necessarily prevent loss of life or injury or prevent earthquake damage to an existing building which complies with these standards. The requirement for compliance with these standards does not preclude the utilization, at the building owner's option, of more extensive strengthening method that might further prevent or limit loss of life or injury or building damage. This section shall not require existing electrical, plumbing, mechanical or fire-safety systems to be altered unless they constitute a hazard to life or property.

This section provides for the identification and classification of reinforced concrete wall and/or reinforced masonry wall buildings with flexible diaphragms based on the current use of the building. Priorities, time periods, and standards are also established under which these buildings are required to be structurally analyzed and strengthened for seismic resistance. Where the analysis determines structural deficiencies, this section requires the building to be strengthened.

9-1-16-200.2: SCOPE:
The provisions of this section shall apply to all buildings designed under building codes in effect prior to February 14, 1977, which, on the effective date of this section have reinforced concrete walls and/or reinforced masonry walls with flexible diaphragms as defined herein.

Any such buildings with seismic strengthening in place prior to the effective date of this ordinance shall be within the scope of this section and shall, therefore, be evaluated according to the provisions of this section and modified to comply with this section if deficient.

9-1-16-200.3: DEFINITIONS:

ANCHORAGE SYSTEM: Is the system of all structural elements and connections which support the concrete or masonry wall in the lateral direction, including diaphragms and

sub-diaphragms, wall anchorage and continuity or cross tie connectors in sub-diaphragms and main diaphragms.

COMMENCED CONSTRUCTION: Construction pursuant to a valid building permit has progressed to the point that one of the called inspections as required by the City has been made and the work for which the inspection has been called has been judged by the City to be substantial and has been approved by the Building Official.

FLEXIBLE DIAPHRAGM: Is any diaphragm constructed of wood structural panel, diagonal or straight wood sheathing, metal decking without a structural concrete topping, or horizontal rod bracing.

REINFORCED CONCRETE WALL: Is a concrete wall that has 50 percent or more of the reinforcing steel required for reinforced concrete in the Uniform Building Code.

REINFORCED MASONRY WALL: Is a masonry wall that has 50 percent or more of the reinforcing steel required by 1976 Uniform Building Code Section 2106.1.12.4.

TILT-UP CONCRETE WALL: Is a form of precast concrete panel construction either cast in the horizontal position at the site and after curing, lifted into place in a vertical position, or cast off-site in a fabricator's shop.

9-1-16-200.4: RATING CLASSIFICATIONS:
The rating classifications as shown in Table No. 9-1-16-200-A are hereby established and each building within the scope of this section shall be placed in one such rating classification by the Building Official. The total occupant load as determined by CBC Chapter 10 for the entire building plus the occupant load of any adjacent building which interconnects with the subject building or uses the subject building for exiting purposes shall be used to determine the rating classification.

9-1-16-200.5: INSPECTION AND RETROFIT REQUIRED; SIGN REQUIRED:

A. The owner of each building within the scope of this section shall cause an investigation of the existing construction and a structural analysis to be made of the building by a civil or structural engineer or architect licensed by the State of California, and if the building does not meet the minimum standards specified in this section, the owner shall cause the building to be structurally altered to conform to such standards or cause the building to be demolished. The owner of a building within the scope of this section shall submit to the Building Official within 275 days after the service of the compliance order the following for review:
    1. A structural analysis, subject to approval by the Building Official within the 275-day time period, which demonstrates that the building meets the minimum requirements of this Section, or
    2. A structural analysis and plans for the proposed structural alterations of the building necessary to comply with the minimum requirements of this Section, or (3) Plans for the demolition of the building.

After plans are submitted and approved by the Building Official, the owner shall obtain a building permit, commence and complete the required construction or demolition within the time limits set forth in Table No. 9-1-16-200-B. These time limits shall begin to run from the date the compliance order is served.

B. Unless exempt pursuant to 9-1-16-200.5(c) below, the owner or person in charge or control of a building within the scope of this section shall, within 275 days after the service of a compliance order, post in a conspicuous place at the entrance of the building, on a sign not less than 8-1/2" x 11", the following statement, printed in not less than 30 point bold type: "This is a reinforced concrete wall or reinforced masonry wall building with a flexible diaphragm built prior to February 14, 1977. The City of Burbank has ordered the owner of this building to bring the building into compliance with the provisions of Burbank Municipal Code Section 9-1-16-200, which relate to earthquake safety."

C. The sign shall remain posted until the structural alterations bringing the building into compliance with the provisions of Section 9-1-16-200 are completed and approved by the Building Official. If an owner of a building within the scope of this section has submitted to the Building official a structural analysis that demonstrates that the building meets the minimum requirements of Section 9-1-16-200 and the Building Official approves such structural analysis, the sign requirements in 9-1-16-200.5(b) shall no longer be applicable to such building.

9-1-16-200.6: COMPLIANCE ORDER:

A. The Building Official shall issue a written compliance order to the record owner of each building within the scope of this section directing the owner to comply with this section and shall also mail a copy to the person, if any, occupying or otherwise in real or apparent charge and control of the building.

B. The order shall be served either personally or by mail and shall contain:

1. The street address and legal description sufficient for identification of the building.
2. A statement that the Building Official has found the building to be within the scope of Section 9-1-16-200.
3. An order to prepare and submit to the Building Official a structural analysis and plans pursuant to Section 9-1-16-200.5.
4. A statement specifying the appeal rights of the owner as contained in Section 9-1-16-200.7.

C. The order shall be served and contents recorded in accordance with the provisions of Article 13 of this Code.

9-1-16-200.7: APPEAL FROM ORDER:

A. The owner of the building may appeal the Building Official's determination that the building is within the scope of this section to the Board of Building and Fire Code Appeals. Such appeal shall be filed with the Board within 60 days of the service date

of the order described in Section 9-1-16-200.6. Such appeal shall be made in writing upon appropriate forms provided therefore by the Building Division, and the grounds thereof shall be stated clearly and concisely. Any materials that the appellant wishes considered by the Board shall be submitted to the Board at least 14 calendar days before the hearing. Each appeal shall be accompanied by a filing fee as set forth in the Burbank Fee Resolution. If no appeal is filed within 60 days of the service of the compliance order, the building shall be considered to be within the scope of this Section 9-1-16-200.

B. Appeals or requests for modification from any other determinations, orders, or actions of the Building Official pursuant to this Section shall be made in accordance with the procedures established in Section 9-1-1-113 of this Code.

9-1-16-200.8: TIME EXTENSIONS:
An owner of a building may apply to the Board of Building and Fire Code Appeals for an extension of time limits to submit a plan for retrofit of the building, to obtain necessary permits and/or to complete the retrofit to the building. The Board may grant an applicant an extension of up to 12 months additional time to comply with these requirements provided the applicant has demonstrated a good faith effort to meet the requirements of this Section 9-1-16-200. A maximum of two such extensions may be granted for a total extension of up to two years. In no case, shall the time for completion of retrofit exceed five years from the time of service of the compliance order.

9-1-16-200.9: NO ALTERATIONS PERMITTED UNTIL BUILDING RETROFIT IS COMPLETE:
Once a compliance order has been served, buildings within the scope of this Section 9-1-16-200 may not be structurally altered, remodeled or added to, without first complying with the provisions of this Section 9-1-16-200 unless the Building Official determines that the alteration is minor in nature.

9-1-16-200.10: ENFORCEMENT:
If the owner of the subject building fails to comply with any order issued by the Building Official pursuant to this section within any of the time limits set forth in Section 9-1-16-200.5, or within any additional time limits as may have been granted by the Board, the Building Official may order that the building be vacated until the building is in compliance.

9-1-16-200.11: ANALYSIS AND DESIGN:
The owner of a building subject to this Section shall cause the structure to comply with the following provisions.

9-1-16-200.11.1: WALL PANEL ANCHORAGE:
Concrete and masonry walls shall be anchored to all floors and roofs which provide lateral support for the wall. The anchorage shall provide a positive direct connection between the wall and floor or roof construction capable of resisting a horizontal force equal to 30 percent of the tributary wall weight for all buildings, and 45 percent of the tributary wall weight for essential buildings, or a minimum force of 250 pounds per linear foot of wall,

whichever is greater. The required anchorage shall be based on the tributary wall panel assuming simple supports at floors and roof.

EXCEPTION: Alternate design may be approved by the Building and Safety Division when justified by well-established principles of mechanics.

9-1-16-200.11.2: SPECIAL REQUIREMENTS FOR WALL ANCHORS AND CONTINUITY TIES:
The steel elements of the wall anchorage systems and continuity ties shall be designed by the allowable stress design method using a load factor of 1.7. The 1/3 stress increase permitted by 1976 UBC Section 1603.5 shall not be permitted for materials using allowable stress design methods. The strength design specified in 1994 UBC Section 1925.2, using a load factor of 2.0 in lieu of 1.4 for earthquake loading, shall be used for design of embedments in concrete. Wall anchors shall be provided to resist out-of-plane forces, independent of existing shear anchors.

EXCEPTION: Existing cast-in-place shear anchors may be used as wall anchors if the tie element can be readily attached to the anchors and if the engineer or architect can establish tension values for the existing anchors through the use of approved as-built plans or testing, and through analysis showing that the bolts are capable of resisting the total shear load while being acted upon by the maximum tension force due to earthquake. Criteria for analysis and testing shall be determined by the Building Division.

Expansion anchors are not allowed without special approval of the Building Division. Attaching the edge of plywood sheathing to steel ledgers is not considered as complying with the positive anchoring requirements of this Section; and attaching the edge of steel decks to steel ledgers is not considered as providing the positive anchorage of this Section unless testing and analysis are performed that establish shear values for the attachment perpendicular to the edge of the deck.

9-1-16-200.11.3: DEVELOPMENT OF ANCHOR LOADS INTO THE DIAPHRAGM:
Development of anchor loads into roof and floor diaphragms shall comply with 1994 UBC Section 1631.2.9.3.

EXCEPTION: If continuously tied girders are present, then the maximum spacing of the continuity ties is the greater of the girder spacing or 24 feet. In wood diaphragms, anchorage shall not be accomplished by use of toe nails or nails subject to withdrawal, nor shall wood ledgers, top plates or framing be used in cross-grain bending or cross-grain tension. The continuous ties required by 1976 UBC Section 1633.2.9.4 shall be in addition to the diaphragm sheathing.

Lengths of development of anchor loads in wood diaphragms shall be based on existing field nailing of the sheathing unless existing edge nailing is positively identified on the original construction plans or at the site.

At reentrant corners, continuity collectors may be required for existing return walls not designed as shear walls, to develop into the diaphragm a force equal to the lesser of the rocking or shear capacity of the return wall, to the tributary shear by not exceeding the capacity of the diaphragm. Shear anchors for the return shall be commensurate with the collector force. If a truss or beam other than rafters or purlins is supported by the return wall or by a column integral with the return wall, an independent secondary column is required to support the roof or floor members whenever rocking of shear capacity of the return wall is governing.

The design for the seismic deflection of return walls, and fins/canopies at entrances, shall insure deflection compatibility with the diaphragm by either seismically isolating the element or attaching the element and integrating its load into the diaphragm.

9-1-16-200.11.4: ANCHORAGE AT PILASTERS:
Anchorage of pilasters shall be designed for the tributary wall anchoring load pursuant to Section 9-1-16-200.11.1, considering the wall as a two-way slab. The pilasters or the walls immediately adjacent to the pilasters shall be anchored directly to the roof framing such that the existing vertical anchor bolts at the top of the pilasters are by-passed without causing tension or shear failure at the top of the pilasters.

EXCEPTION: If existing vertical anchor bolts at the top of the pilasters are used for the anchorage, then additional exterior confinement shall be provided.

The minimum anchorage at a floor or roof between the pilasters shall be that specified in Section 9-1-16-200.11.1 of this Section.

9-1-16-200.11.5: SYMMETRY:
Symmetry of connectors in the anchorage system is required. Eccentricity may be allowed when it can be shown that all components of forces are positively resisted and justified by calculations or tests.

9-1-16-200.11.6: MINIMUM ROOF MEMBER SIZE:
Wood members used to develop anchorage forces to the diaphragm must be at least 3x for new construction and replacement. All such members must be checked for gravity and earthquake as part of the wall anchorage system. For existing buildings, the member check shall be without the 1/3 stress increase pursuant to Section 9-1-16-200.11.2.

9-1-16-200.11.7: COMBINATION OF ANCHOR TYPES:
To repair and retrofit existing buildings, a combination of different anchor types of different behavior or stiffness shall not be permitted. The capacity of the new and existing connectors cannot be added.

9-1-16-200.11.8: PROHIBITED ANCHORS:
Usage of connectors that were bent and/or stretched from the intended use shall be prohibited.

9-1-16-200.11.9: CRACK AND DAMAGE REPAIRS, EVALUATION OF EXISTING STRUCTURAL ALTERATIONS:
The engineer shall report any observed structural conditions and structural damage that have imminent life safety effects on the buildings and recommend repairs. Evaluations and repairs shall be reviewed and approved by the Building and Safety Division. The engineer shall also evaluate the effects of alterations such as openings cut in existing wall panels without a permit that may present immediate life safety hazard and correct when necessary.

9-1-16-200.11.10: MISCELLANEOUS:
Existing mezzanines relying on the tilt-up walls for vertical and/or lateral support shall be anchored to the walls for the tributary mezzanine load. Walls depending on the mezzanine for lateral support shall be anchored per Sections 9-1-16-200.11.1, 9-1-16-200.11.2 and 9-1-16-200.11.3.

EXCEPTION: Existing mezzanines that have independent lateral and vertical support need not be anchored to the walls. Existing interior masonry or concrete walls not designed as shear walls, that extend to the floor above or to the roof diaphragm shall also be anchored for out-of-plane forces per Sections 9-1-16-200.11.1, 9-1-16-200.11.2 and 9-1-16-200.11.3 of this Code. In the in-plane direction, the walls may be isolated or shall be developed into the diaphragm for a lateral force equal to the lesser of the rocking or shear capacity of the wall, or the tributary shear but not exceeding the diaphragm capacity.

9-1-16-200.12: MATERIALS OF CONSTRUCTION:
All materials permitted by this Code, including their appropriate allowable stresses and those existing configurations of materials specified in this Code, may be utilized to meet the requirements of this Section.

9-1-16-200.13: INFORMATION REQUIRED ON PLANS:
The plans shall accurately reflect the results of the engineering investigation and design and show all pertinent dimensions and sizes for plan review and construction. In addition to the seismic analysis required elsewhere in this Section, the licensed engineer or architect responsible for the seismic analysis of the building shall record the following on the approved plans:

A. Floor plans and roof plans shall show existing framing construction, diaphragm construction, proposed wall anchors, cross-ties and collectors. Existing nailing, anchors, ties and collectors shall also be shown on the plans if these are part of the design, and these structural elements need to be verified in the field.

B. At elevations where there are alterations or damage, details shall show roof and floor heights, dimensions of openings, location and extent of existing damage, and proposed repair.

C. Typical wall panel sections with panel thickness, height, location of anchors shall be provided.

D. Details shall include existing and new anchors and the method of development of anchor forces into the diaphragm framing; existing and/or new cross-ties; existing and/or new or improved support of roof and floor girders at pilasters or walls.

TABLE NO. 9-1-16-200-A RATING CLASSIFICATIONS Classification/Occupant Load		
Group I 300 or more	Group II 30 to 299	Group III less than 30

TABLE NO. 9-1-16-200-B TIME LIMITS FOR COMPLIANCE		
Obtain Building Permit Within	**Commence Construction**	**Complete Construction**
365 days	545 days	Three years

TABLE NO. 9-1-16-200-C SERVICE PRIORITIES Rating/Minimum Time Period Classification Before Service of Compliance Order		
Group I 30 days	Group II 1 year	Group III 2 years

DIVISION 3. VOLUNTARY PRESCRIPTIVE PROVISIONS FOR SEISMIC STRENGTHENING OF CRIPPLE WALLS AND SILL PLATE ANCHORAGE OF LIGHT, WOOD-FRAME RESIDENTIAL BUILDINGS

9-1-16-A300: ADOPTION OF CODE:
Appendix A - Chapter A3 of Part 10 of Title 24 of the California Code of Regulations, also known as the “California Existing Building Code,” which is part of the California Building Standards Code, 2025 Edition, is hereby adopted without local amendments by the City of Burbank and made a part of this Code for promoting public welfare and safety by reducing the risk of earthquake-induced damage to existing wood-frame residential buildings.

DIVISION 4. MANDATORY EARTHQUAKE HAZARD REDUCTION IN EXISTING WOOD FRAME RESIDENTIAL BUILDINGS WITH SOFT, WEAK OR OPEN-FRONT WALL LINES

9-1-16-400.1: PURPOSE:

The City of Burbank is located within the most seismically active area of the country exposing structures to the highest risk of damage due to earthquakes. The City is located in close proximity to the Verdugo Fault, Hollywood Fault, and the San Andreas fault and

is therefore susceptible to the geological conditions of earthquake faults. The resulting structural damage in such areas can be severe.

The 1994 Northridge Earthquake caused considerable damage to buildings and structures located in the City of Burbank. Experts expect a massive earthquake on one of the faults under the City within the next 30 years and several earthquakes similar in intensity to the Northridge Earthquake during that same period.

The damage to buildings could expose occupants of these buildings to a potential life-safety risk in future earthquakes. The City of Burbank must protect its population and property and enforce the Building Code so as to provide effective protection for its citizens.

Recent earthquakes, including the 1994 Northridge event, have demonstrated deficiencies in the structural performance of existing wood-framed multi-story buildings with soft, weak, or open front walls. More recent Building Codes have incorporated revisions to the seismic requirements that apply to the design and construction of new or altered buildings but did not mandate retrofit of existing “nonconforming” buildings that predated the revisions.

Pre-1978 buildings of this type are considered potentially hazardous and prone to significant damage, particularly along certain lines of the building at the ground floor, in moderate to major earthquakes. These buildings may lack adequate strength in these susceptible areas to prevent collapse.

The purpose of this section is to promote public safety and welfare by reducing the risk of death or injury that may result from the effects of earthquakes on existing wood-framed multi-story buildings with soft, weak, or open front walls designed under the building codes in effect prior to the adoption of the 1978 California Building Standards Code. Such buildings have been categorized, based on past earthquakes, as being potentially hazardous and prone to significant damage, including possible collapse, in a moderate to major earthquake.

The provisions of this section are minimum standards for structural seismic resistance established primarily to reduce the risk of life loss or injury on both subject and adjacent properties. The requirement for compliance with these standards does not preclude the utilization, at the building owner’s option and expense, of more extensive strengthening method that might further prevent or limit loss of life or injury or building damage. This section shall not require existing electrical, plumbing, mechanical or fire-safety systems to be altered unless they constitute a hazard to life or property.

This section provides for the identification and classification of existing wood-framed multi-story buildings with soft, weak, or open front walls based on the current use of the building. Time periods and standards are also established under which these buildings

are required to be structurally analyzed and strengthened for seismic resistance. Where the analysis determines structural deficiencies, this section requires the building to be strengthened.

9-1-16-400.2: SCOPE:

The provisions of this section shall apply to wood-framed multi-story residential-use buildings designed under building codes in effect prior to January 1, 1978, which, on the effective date of this section, have soft, weak, or open front walls at the ground floor as defined herein.

Single-family or duplex residential structures that qualify as Occupancy Group R-3 per the Building Code are exempt from the requirements of this section.

Notwithstanding any provision of the Building Code, compliance with this section shall not require existing electrical, plumbing, mechanical or fire-safety systems to be altered to comply with existing code unless they constitute a hazard to life or property. The existing electrical, plumbing, mechanical or fire-safety components shall comply with the Building Code if the seismic retrofit interferes with or alters any of these components.

9-1-16-400.2.1: RECIPROCITY:

Buildings that have been voluntarily retrofitted pursuant to Ordinance No. 3487 or 9-1-16-A400, prior to the effective date of this ordinance, are exempt from the requirements of this section. In such cases, the building owner shall submit permit documentation supplementing the screening report that validates that the building has been retrofitted and a building permit has been finalized for a soft, weak, or open front walls condition at the ground floor as defined herein.

9-1-16-400.3: DEFINITIONS:

Notwithstanding the applicable definitions, symbols and notations in the Building Code, the following definitions shall apply for the purposes of this section:

BUILDING CODE: refers to the current Building Code adopted by the City of Burbank.

ENGINEERING ASSESSMENT REPORT: is a report prepared by a civil or structural engineer or architect licensed by the State of California which shall include detailed and dimensioned drawings of the existing building and structural analysis of the existing conditions with supporting calculations to clarify the presence or absence of soft, weak, or open-front wall conditions of the subject building.

GROUND FLOOR: is any floor within the wood-frame portion of a building whose elevation is immediately accessible from an adjacent grade by vehicles or pedestrians. The ground floor portion of the structure does not include any floor that is completely below adjacent grades.

OPEN-FRONT WALL LINE: is an exterior wall line lacking sufficient vertical elements of the lateral force-resisting system, which then requires tributary seismic forces to be resisted by diaphragm rotation or requires excessive cantilever beyond parallel lines of shear walls. Diaphragms that cantilever more than twenty five percent (25%) of the distance between the first two adjacent parallel lines of lateral force resisting elements from which the diaphragm cantilevers shall be considered excessive. Cantilevers shall not exceed more than six feet. Diaphragm cantilevers or exterior balconies of 6 feet or less in width shall not be considered excessive cantilevers.

OWNER OR BUILDING OWNER: is the person, individual(s), agent, firm, corporation, or entity having legal possession, equitable interest in the property, or rights to sanction evaluation or retrofit of a building.

RETROFIT: is an improvement of the seismic lateral force resisting system by alteration of the existing structural elements or addition of new structural elements.

SCREENING REPORT: is a city-standardized form completed and submitted by the building owner or their representative that identifies the appropriate construction, use, and other relevant characteristics of the subject building to confirm applicability of this ordinance.

SEISMIC DESIGN GUIDELINES: are current guidelines developed by the Building Official, which are intended to calibrate, delineate and detail technical requirements to be used for the retrofitting of buildings subject to this section.

SEISMIC RETROFIT CONSTRUCTION COSTS: are all costs directly related to the construction required to retrofit a building to comply with requirements of this section, including labor, material, equipment, and contractor services. The costs shall not include: project management fees and expenses, architectural and engineering fees, testing and inspections fees, or permitting and processing fees.

SOFT WALL LINE: is a wall line, the lateral stiffness of which is less than what is required by story drift limitations or deformation compatibility requirements of this section. In lieu of the engineering analysis required by this section to determine whether a wall line's lateral stiffness is less than the aforementioned story drift limitations or deformation compatibility requirements, a soft wall line may be defined as a wall line in a story where the wall stiffness is less than seventy percent (70%) of the stiffness of the exterior wall above for the direction under consideration.

STORY: as used in this section, is defined as the portion of a structure between the tops of two successive finished floor surfaces and, for the topmost story, from the top of the floor finish to the top of the roof structural element, but also includes any basement or underfloor space of a building exceeding four feet in height.

STORY STRENGTH: is the total strength of all seismic-resisting elements sharing the same story shear in the direction under consideration.

WALL LINE: is any length of a wall along a principal axis of the building used to provide resistance to lateral loads.

WEAK WALL LINE: is a deficiency of a Wall Line at the Ground Floor in which the wall strength is less than eighty percent (80%) of the strength of the wall above in the direction under consideration.

9-1-16-400.4: COMPLIANCE REQUIREMENTS:

A. Upon the issuance of an order as identified in this section, for each building structure identified in that order, the following requirements apply:

1. The owner or appropriate representative of each building within the scope of this section shall be responsible for the completion and submission of a screening report which addresses and clearly identifies all relevant characteristics of the subject building; and

2. The owner shall cause the building to be structurally altered to conform to such standards at their own cost. The owner shall engage a civil or structural engineer or architect licensed by the State of California to prepare, stamp, and sign the following for submission to the City:

a. A structural analysis with calculations for proposed structural alterations of the building necessary to comply with the minimum requirements of this section; and

b. Construction documents that include all plans, notes, details, and specifications that fully identify the requirements of the necessary construction efforts for compliance with this section.

B. After plans are submitted and approved by the Building Official, the owner shall obtain a building permit to commence and complete the required construction within the time limits set forth in this section. These time limits shall begin to run from the date the compliance order is served, January 10, 2025.

9-1-16-400.5: TIME PERIOD FOR COMPLIANCE:

Within the timeframes specified in Table 9-1-16-400.5 from the date the order is issued, January 10, 2025, the Owner of any building that is subject to the provisions of this section is responsible for ensuring the completion of the appropriate scope of work. The screening form shall demonstrate whether the structure conforms to the earthquake design provisions contained in this section. Minimum form requirements shall be as specified by the Building Official. Buildings determined to be outside of the scope of this section based on the screening form, shall not be required to be retrofitted.

Table 9-1-16-400.5

SOFT-STORY SEISMIC RETROFIT COMPLIANCE TIMELINE

Milestone	**Submit Screening Form**	**Submit Engineered Plans**	**Plans Approved**	**Obtain Permit and Begin Construction**	**Complete Construction**
Time from Notice Date – January 10, 2025	1 year – January 12, 2026	2 years – January 11, 2027	3 years – January 10, 2028	4 years – January 10, 2029	5 years – January 10, 2030

9-1-16-400.6: COMPLIANCE ORDER:

9-1-16-400.6.1: ISSUANCE OF ORDER:

When the Building Official determines that a building is within the scope of this section, the Building Official shall issue an order as described in Section 9-1-16-400.6.2 to the Owner of the building.

9-1-16-400.6.2: CONTENTS OF ORDER:

The order shall specify that the Building Official has determined that the subject structure is within the scope of this section and may therefore be required to meet the seismic strengthening provisions of this section. The order shall set forth the Owner's alternatives and time limits for compliance with this section.

9-1-16-400.6.3: SERVICE OF ORDER:

The order shall be in writing and shall be sent via USPS Certified mail in a sealed envelope, postage prepaid, and addressed to the Owner as shown on the last equalized assessment roll.

9-1-16-400.6.4: FAILURE TO RECEIVE ORDER:

Failure of any Owner to receive an order as indicated in this section shall not relieve the Owner from compliance with this section.

9-1-16-400.6.5: APPEAL/EXEMPTION FROM ORDER:

Upon completion of the screening report confirming applicability of the ordinance, the owner may appeal the Building Official's determination. If the building is presumed to not be subject to this section due to a lack of any soft, weak, or open-front wall lines, an engineering assessment report may be prepared by a civil or structural engineer or architect licensed by the State of California and submitted to the Building Official for consideration of acceptance, at the owner's expense. If the engineering assessment finds that the building does not meet the criteria of a soft, weak, or open front along any of the grade-level wall lines, an engineering exemption may be requested. The Building Official shall review completed engineering assessment reports to determine if an engineering exemption is warranted and provide a decision of approval or denial to the owner in writing. The decision of the Building Official regarding the engineering exemption shall be served on the Owner in compliance with section 9-1-14-400.6.3.

9-1-16-400.6.6: RECORDATION:

If an Owner of a building that has been determined to be within the scope of this Article has failed to comply with the requirements of this section within the time limits provided in Table A, the Building Official may record in the office of the Los Angeles County Recorder a certificate stating that the subject building is within the scope of this Article and requires seismic retrofit.

Once the building has been retrofitted to comply with this section, the Building Official shall record a Certificate indicating that the subject building no longer is in violation of this section.

9-1-16-400.6.6: EXTENSIONS:

At any point after the completion of the screening report and the construction plans have been submitted and approved, an owner of a building may apply to the Building Official for an extension of the construction time limits as stated in this section. The Building Official may grant one or more extensions of additional time, for periods not more than 180 days each, to comply with the requirements of this section, so long as the Owner provides the following: 1) the Owner has demonstrated a good faith effort to meet the

requirements of this section; and 2) the Owner includes a proposed schedule for the remaining scope of work for the project. The granting of an extension shall not exempt nor postpone compliance with the provisions set forth section 9-1-16-400.7 or 9-1-16-400.12.2.

9-1-16-400.7: OCCUPANCY AND TENANT ADVISORY:

9-1-16-400.7.1: NOTICE OF ORDER:

The owner or person in charge or control of a building within the scope of this section shall, within 1 year after the service of a compliance order, post in a conspicuous place at the entrance of the building, on a sign not less than 8-1/2" x 11", the following statement, printed in not less than 30-point bold type:

The City of Burbank has ordered the owner of this building to bring the building into compliance with the provisions of Burbank Municipal Code section 9-1-16-400, which relate to earthquake safety.

The sign shall remain posted until the structural alterations bringing the building into compliance with the provisions of this section are completed and approved by the Building Official. If the Building Official approves an exemption that demonstrates that a building is not subject to the provisions of this section, these sign requirements shall no longer be applicable to that building.

9-1-16-400.7.2: NOTICE OF CONSTRUCTION:

Upon issuance of the building permit, the owner or person in charge or control of a building within the scope of this section shall post a notice that includes the information for the project as determined by the City, including the scope of work, expected duration, contact information for a representative of the contractor, and construction hours. The text format, signage size, and signage location shall be approved by the Building Official.

9-1-16-400.8: ANALYSIS AND DESIGN:

9-1-16-400.8.1: SCOPE OF ANALYSIS:

As required by this section, the alteration, repair, replacement or addition of structural elements and their connections shall meet the minimum strength and stiffness requirements in conformance with the current Building Code except as modified herein. The lateral-load-path analysis shall include the load-resisting elements and connections from the horizontal wood diaphragms immediately above any soft, weak, or open wall

lines to and including the foundation. Stories above the soft, weak, or open wall lines shall be considered in the analysis but need not be modified. Engineer shall investigate existing conditions as applicable for the required analysis including performing initial material testing and verification of existing conditions. Minimum investigation requirements shall be specified by the Building Official.

9-1-16-400.8.2: DESIGN BASE SHEAR AND DESIGN PARAMETERS:

The design force in a given direction shall not be less than 75% of the design base shear as determined based on the seismic provisions of ASCE 7 and design provisions as specified by the current Seismic Design Guidelines. The structure shall be analyzed and/or strengthened in order to mitigate each soft, weak, or open-front wall line deficiency as defined in 9-1-16-400.3.

9-1-16-400.8.3: LIMITATIONS TO LATERAL FORCE-RESISTING SYSTEMS:

Strengthening systems with concrete shear walls, masonry shear walls, or steel braced frames shall not be permitted unless a full story analysis is performed and includes the proper consideration of actual diaphragm stiffness torsional behavior.

9-1-16-400.8.4: HORIZONTAL STRUCTURAL IRREGULARITIES IN BUILDINGS WITH 3 OR MORE STORIES:

Structures with three or more stories and having horizontal structural irregularities of type 2, 3, 4, or 5 as listed in ASCE 7 Table 12.3-1 (“Horizontal Structural Irregularities”) shall be altered to meet the additional requirements of those sections referenced in the table for the soft, weak, or open-front wall lines being considered.

9-1-16-400.8.5: ALTERNATIVE ANALYSIS, BASE SHEAR, AND DESIGN PARAMETERS:

The Building Official may approve alternate analysis and/or design methodologies that meet the same performance intent as those prescribed by this Article and that achieve the objectives established by this section. Design criteria shall be submitted to the Building Official for review and approval prior to submission of plans.

Alternatively, the structure may be retrofitted per Appendix A4 of the California Existing Building Code, provided the entire Story is analyzed and/or strengthened in order to mitigate each soft, weak, or open-front wall line deficiency as defined in 9-1-16-400.3.

9-1-16-400.8.6: STORY DRIFT LIMITATIONS:

The calculated story drift for each retrofitted wall line shall not exceed the allowable deformation compatible with all vertical load-resisting elements and 0.025 times the story height. Drift calculations shall be in accordance with ASCE 7 requirements and design provisions as approved by the Building Official.

9-1-16-400.8.7: POLE/CANTILEVER COLUMN SYSTEMS:

For retrofitted systems where the lateral resistance along a soft, weak, or open-front wall line is provided by pole/cantilever column elements, a minimum of two pole/columns elements are required separated by a minimum clear distance of 8-feet.

The effects of rotation and soil stiffness shall be included in the calculated story drift where lateral loads are resisted by vertical elements where required depth of embedment is determined by pole formulas or as specified by an approved geotechnical investigation report.

9-1-16-400.8.8: ELEMENTS NOT PART OF THE LATERAL FORCE-RESISTING SYSTEM:

The requirements of the Building Code shall apply, except as modified herein. All structural framing elements along and immediately adjacent to the retrofitted lines and their connections where not required by the design to be part of the lateral force resisting system shall be designed and detailed to be adequate to maintain support of design dead plus live loads when subject to the expected deformations caused by seismic forces. The stress analysis of cantilever columns shall use an effective length factor of 2.1 for the direction normal to the axis of the beam.

9-1-16-400.8.9: TIES, CONTINUITY, AND COLLECTORS:

All parts of the structure included in the scope of analysis shall be interconnected and the connections shall be capable of resisting the seismic forces created by the parts being connected in accordance with the current Building Code.

9-1-16-400.8.10: ANCHORAGE OF CONCRETE OR MASONRY STRUCTURAL WALLS TO DIAPHRAGMS:

When using new masonry or concrete walls to meet the requirements of this section, proper in-plane and out-of-plane anchorage of walls into the diaphragm shall be provided in accordance with the current Building Code.

9-1-16-400.9: OTHER DEVELOPMENT STANDARDS:

Other applicable development standards within this Code shall remain in effect for proposed retrofits required to bring a structure into compliance with this section. Any proposed deviations from established development standards must be presented in writing and on appropriate construction documents. The acceptability of any deviations shall be at the discretion of the Building Official.

9-1-16-400.10: INFORMATION REQUIRED ON PLANS:

9-1-16-400.10.1: GENERAL:

For existing and new construction, the plans and specifications shall be of sufficient clarity to indicate the nature, design methodology, and extent of the proposed work and to show in detail that it will conform to the provisions of this section and other applicable sections of the Building Code.

9-1-16-400.10.2: ENGINEER'S STATEMENT:

The responsible engineer or architect shall provide the following statements on the approved plans:

I am responsible for designing this building's seismic strengthening in compliance with the minimum standards of the Mandatory Earthquake Hazard Reduction in Existing Wood Frame Residential Buildings with Soft, Weak, or Open-Front Wall Lines (Title 9, Chapter 1, Article 16, Division 4).

9-1-16-400.10.3: OWNER'S STATEMENT:

Unless the entire building has been evaluated and retrofitted as needed to meet the full intent of the current Building Code, the Owner shall provide and sign the following statement on the cover of the drawings:

I, _____, understand the seismic evaluation and strengthening performed under this project complies with the Mandatory Earthquake Hazard Reduction in Existing Wood Frame Residential Buildings with Soft, Weak, or Open-Front Wall Lines (Title 9, Chapter 1, Article 16, Division 4) which is intended to improve the performance of the building during a seismic event. I understand the entire building has not been evaluated nor strengthened for other potential structural deficiencies that may cause a life safety concern, injury, or property damage risk resulting from a seismic event.

9-1-16-400.10.4: QUALITY CONTROL AND ASSURANCE REQUIREMENTS:

The approved plans shall include notes which clearly identify all project-specific requirements for material testing, special inspections, structural observations, and the proper installation of newly added materials.

9-1-16-400.11: QUALITY ASSURANCE:

9-1-16-400.11.1: STRUCTURAL OBSERVATIONS:

All structures regulated by this section require structural observation during construction. The Owner shall employ the engineer or architect responsible for the structural design, or another engineer or architect designated by the engineer or qualified architect responsible for the structural design, to perform structural observation as defined in the Building Code.

9-1-16-400.11.2: SPECIAL INSPECTIONS:

Special inspections shall be provided as required by the Building Code. Additional inspections shall be noted on drawings as required by Building Official.

9-1-16-400.12: VIOLATIONS/PENALTIES:

9-1-16-400.12.1: VIOLATIONS:

It shall be unlawful for any person to own, use, occupy or maintain any building or structure or portion thereof, or cause the same to be done, contrary to, or in violation of, any of the provisions of this section. Violations of this section are subject to the provisions of 1-1-105 of this code.

If the owner of the subject building fails to comply with any order issued by the Building Official pursuant to this section within any of the time limits set forth in 9-1-16-400.5, or within any additional time limits as may have been granted per this section, the subject building shall be deemed to be in violation and subject to penalties per 9-1-16-400-12.3.

9-1-16-400.12.2: RECORDATION OF VIOLATIONS:

Pursuant to violations of this section, the Building Official may record in the office of the Los Angeles County recorder a certificate stating that the subject building is in violation of the terms of this section and requires seismic retrofit.

Once the building has been retrofitted to comply with this section, the Building Official shall record a Certificate indicating that the subject building no longer is in violation of this section.

9-1-16-400.12.3: PENALTIES:

In addition to the penalties provided in Section 1-1-105 of this code, any condition caused or permitted to exist in violation of this section shall be subject to 1-1-108 of this code and issuance of administrative citations as established in 1-1-108.1 of this code. The Building Official may order that the building be vacated until the building is in compliance.

9-1-16-400.13: APPLICABILITY/SERVICEABILITY:

9-1-16-400.13.1: INTERNAL CONFLICTS:

Where there is a conflict between a general requirement and a specific requirement, the specific requirement shall be applicable. Where, in any specific case, different sub-sections of this section specify different materials, methods of construction, or other requirements, the most restrictive shall govern.

9-1-16-400.13.2: OTHER LAWS:

The provisions of this section shall not be deemed to nullify any provisions of local, state or federal law.

9-1-16-400.13.3: CODES AND REFERENCES:

The provisions of the codes and standards referenced in this section shall be considered part of the requirements of this section to the prescribed extent of each such reference. Where there are conflicts between the provisions of this section and the provisions of any referenced code or standard, the provisions of this section shall apply.

9-1-16-400.14: COSTS RECOVERY:

9-1-16-400.14.1: PASS-THROUGH COSTS:

Upon completion of seismic retrofit work and finalization of the corresponding building permit, property owners are authorized to implement a temporary surcharge to recover up to 50% of total seismic retrofit construction costs divided equally among all rental units. The monthly surcharge applied to each unit shall not exceed $51 per unit and may be collected for a maximum period of 120 months. In no event shall the surcharge be levied beyond 120 months from when the date the building permit for the retrofit is finalized.

Before implementing any surcharge to recover seismic retrofit construction costs, property owners must provide written notification to tenants containing the following information:

a. The total seismic retrofit construction costs incurred.

b. The specific amount of the pass-through surcharge.

c. The duration for which the surcharge will be collected.

Property owners are responsible for maintaining accurate and comprehensive records that justify and track the surcharge and must disclose the surcharge as a separate line item on new leases. Such records must be available for inspection as necessary by relevant authorities.

DIVISION 5. EARTHQUAKE DAMAGE REPAIR OF WELDED STEEL MOMENT FRAME BUILDINGS

9-1-16-500: EARTHQUAKE DAMAGE REPAIR OF WELDED STEEL MOMENT FRAME BUILDINGS:

9-1-16-500.1: PURPOSE:
The City of Burbank is within CBC Seismic Zone 4. This zone is the highest risk for damaging earthquakes. Approximately 30 percent of the City is categorized as an "Active Fault Near Source Zone" (ICBO, California Department of Conservation-Division of Mines and Geology). The Near-Source Zone is an area within two kilometers of an active fault (Class A or B) capable of producing a major earthquake. The Verdugo Fault and the Hollywood Fault are the near-source influences for the City (both are Class B faults). A

Near-Source Zone is subject to the largest and most damaging ground acceleration and velocity produced in a seismic event. The resulting structural damage in a near-source zone is generally severe.

The 1994 Northridge Earthquake caused considerable damage to buildings and structures located in the City of Burbank. Experts expect a massive earthquake on one of the faults under the City within the next 30 years and several earthquakes similar in intensity to the Northridge Earthquake during that same period.

Studies have been conducted on the earthquake damage by structural engineers from numerous state and city agencies and the Structural Engineers Association of Southern California (SEAOSC). These engineers have determined that welded steel moment frame buildings located in earthquake-damaged areas were severely impacted by the Northridge Earthquake and its aftershocks.

Section 9-1-16-500 is in response to the discovery of unexpected and unprecedented damage to welded steel moment frame (WSMF) structures in the Northridge Earthquake. This serious damage was revealed only after detailed structural inspections were performed. In many cases, buildings with significant structural damage showed no outward signs of distress. Given the lack of visual and superficial clues, such as a permanent drift or damaged architectural elements, property owners and building occupants are unaware of the risk to safety and the serious consequences of hidden damage to welded steel moment frames.

Inspection of the WSMF building stock in the City of Los Angeles revealed significant and widespread damage due to the Northridge Earthquake of 1994, when evaluated in accordance with SAC/FENIA guidelines. Sixty percent, or 150, of the buildings within the scope of the City of Los Angeles Repair Ordinance had significant WSMF structural damage requiring repairs. The buildings in Burbank were subjected to similar earthquake forces and ground motions as these damaged buildings in Los Angeles. A building with a damaged WSMF has little or no capacity to resist further earthquake forces.

The Building Code does not allow a welded steel moment frame building to be maintained with damaged connections. It is necessary to insure that repairs to these welded steel moment frame buildings are performed in an expeditious manner.
The damage to these welded steel moment frame buildings could expose occupants of these buildings to potential life-safety risks in future earthquakes, and the City of Burbank must protect its population and property and enforce the Building Code so as to provide effective protection to all its citizens.

Thus, the purpose of this ordinance is to promote public safety and welfare by reducing the risk of death or injury that may result from the effects of earthquakes on welded steel moment frame buildings.

9-1-16-500.2: SCOPE:

Section 9-1-16-500 shall be applicable to buildings of more than one story of welded steel moment frame design if construction of the building began before January 17, 1994, provided, however, that the following buildings are exempt from the requirements of this Section 9-1-16-500:

A. Any single-family dwelling (CBC R-3 occupancy),

B. Detached one- or two-story dwellings of CBC R-I occupancy, and

C. Detached apartment houses containing fewer than five dwelling units and used solely for residential purpose.

9-1-16-500.3: DEFINITIONS:

CONNECTION: Combination of joints used to transmit forces between two or more members categorized by the amount and type of force transferred (moment, shear, end reaction).

NON-DESTRUCTIVE TESTING: An approved in-situ procedure for examining material continuity, including but not limited to: Liquid Dye Penetrant Test, Magnetic Particle Test, Radiographic Test, Ultrasonic Test.

STRUCTURAL ENGINEER: A person authorized to use the title of structural engineer under Chapter 7 (commencing with Section 6700) of Division 3 of the Business and Professions Code.

WELDED STEEL MOMENT FRAME: A plane (or nearly so) frame structure deriving lateral load stability from rigid interconnection of the beams and columns. Rigid connections may consist either of fully welded connections or connections which are partially welded and bolted. This includes both ordinary moment-resisting frames and special moment-resisting frames as defined by the California Building Code.

9-1-16-500.4: INSPECTION AND REPAIR REQUIRED:

A. Structural Analysis and Inspection Report.

The owner of each building within the scope of this Section 9-1-16-500 shall, upon service of an inspection order, cause a structural analysis and inspection report of the building to be prepared by a structural engineer.

The structural analysis and inspection report shall contain the results of an analytical or numerical analysis of the building with the number and location of connections identified as requiring inspection based on the results of such analysis. The number and location of connections to be inspected shall be selected by the structural engineer and approved by the Building Official prior to inspection.

Inspection and test procedures shall follow guidelines established by the Federal Emergency Management Agency (FEMA), Applied Technology Council (ATC), and SAC Steel Project. The Building Official shall verify the analysis and inspection procedures comply with these guidelines.

The final structural analysis and inspection report shall include the result of any nondestructive tests and the results of other approved methods of testing connections, shall state whether or not the building has damage to these connections, and shall identify the damaged connections.

If no repairs are indicated in the structural analysis and inspection report, the report shall demonstrate that the building's welded steel moment frame structural elements are without damage that may reduce the moment resisting capacity of the structural elements below the building's original minimum design requirements.

If the structural analysis and inspection report indicate that the welded steel moment frame structure of the building is damaged, the report shall include plans and procedures prepared by a structural engineer for the repair of such damage. The repair plans shall indicate the repairs necessary for the structure to meet the standards for strength under which the building was originally designed.

The structural analysis and inspection report must be submitted to the Building Official within 12 months after the service of an inspection order. The structural analysis inspection report is subject to approval by the Building Official.

B. Repair of Damage.
If the structural analysis and inspection report indicates that the welded steel moment frame structure of the building is damaged, the owner of such building shall cause the structure to be repaired to the standards for strength under which the building was originally designed. After repair plans are submitted and approved by the Building Official, the owner shall, within 18 months of the service of the inspection order, obtain a building permit for the necessary repairs. The repairs shall be completed within 24 months after the service of the inspection order.

9-1-16-500.5: TYPES OF DAMAGE:
Types of damage which may reduce the moment resisting capacity of welded steel moment frame structures below minimum design safety criteria include but are not limited to:

A. Column to beam connection weld discontinuities detectable by visual inspection or non-destructive testing that are not termed defects per the criteria given in the Welding Code. Weld defects resulting in discontinuity and loss of connection strength below design criteria. Cracked or damaged shear tab or weld.

B. Panel zone damage such as fracture, buckle, or yield of continuity plate, yield or ductile deformation of web, full or partial depth fracture in web or doubler plate, severed column.

C. Incipient flange crack, flange tearout or divot, lamellar flange tearing, column splice failure, buckled flange, full or partial flange crack in or outside of heat affected zone.

9-1-16-500.6: NO ALTERATIONS PERMITTED UNTIL BUILDING REPAIRED:
Once an inspection order has been served, buildings within the scope of this Section 9-1-16-500 may not be structurally altered, remodeled or added to without first complying with the provisions of this Section 9-1-16-500, unless the Building Official determines that the alteration is minor in nature.

9-1-16-500.7: INSPECTION ORDER:

A. The Building Official shall issue a written inspection order to the record owner of each building within the scope of this Section 9-1-16-500 and shall also mail a copy to the person, if any, occupying or otherwise in real or apparent charge and control of the building.

B. The order shall be served either personally or by mail and shall contain:

1. The street address and legal description sufficient for identification of the building.
2. A statement that the Building Official has found the building to be within the scope of Section 9-1-16-500.
3. An order to prepare and submit to the Building Official a structural analysis and inspection report as required pursuant to Section 9-1-16-500.4.
4. A statement specifying the appeal rights of the owner as contained in Section 9-1-16-500.9.

C. The order shall be served and contents recorded in accordance with the provisions of Subsections (c), (d), (e), and (f) of Article 13 of this Code.

9-1-16-500.8: REPAIR ORDER:

A. The Building Official shall issue a written repair order to the record owner of a damaged building directing the owner to repair any damage to the Welded Steel Moment Frame based on the structural analysis and nondestructive testing recommendations approved by the Building Official and shall mail a copy of such repair order to the person, if any, occupying or otherwise in real or apparent charge and control of the building.

B. The repair order shall be served either personally or by mail and shall contain:

1. The street address and legal description sufficient for identification of the building.

2. A statement that the Building Official has found the building to be within the scope of Section 9-1-16-500.
3. An order to secure permits, physically commence, and to complete all work necessary to meet the repair recommendations proposed in the approved structural analysis and inspection report.
4. A statement specifying the appeal rights of the owner as contained in Section 9-1-16-500.9.

C. The order shall be served and contents recorded in accordance with the provisions of Article 13 of this Code.

9-1-16-500.9: APPEAL FROM ORDERS:

A. The owner may request that the Building Official reconsider the Building Official's determination that the building is within the scope of this Section 9-1-16-500 by submitting building plans to the Building Official that clearly establish that the building's structural systems and connections are not of welded steel moment frame design. Further, the owner may appeal the Building Official's determination that the building is within the scope of this Section 9-1-16-500 to the Board of Building and Fire Code Appeals. Reasons for a building's exemption from this Section 9-1-16-500 shall be limited to:
   1. the building is not of welded steel moment frame design; or
   2. construction of the building began after January 17, 1994.

   Such appeal shall be filed within 60 calendar days from the service of the inspection order and shall clearly and concisely state the grounds for such appeal. Any materials that the appellant wishes considered by the Board shall be submitted to the Board 14 calendar days before the hearing. If no request for reconsideration and no appeal are filed within 30 days of the service of the inspection order, the building shall be considered to be within the scope of this Section 9-1-16-500.

B. Appeals or requests for modification from any other determinations, orders, or actions of the Building Official pursuant to this section shall be made in accordance with the procedures established in Section 9-1-1-113 of this Code.

9-1-16-500.10: TIME EXTENSIONS:

An owner of a building may apply to the Board of Building and Fire Code Appeals for an extension of the time limits to submit a plan for repair to the building and obtain the necessary permits and the time limit to complete the repairs to the building. The Board may grant an applicant an extension of up to 12 months additional time to comply with these requirements provided the applicant has demonstrated a good faith effort to meet the requirements of this Section 9-1-16-500. A maximum of three such extensions may be granted for a total extension of up to three years. In no case, shall the time for completion of repairs exceed five years from the service of the inspection order.

9-1-16-500.11: ENFORCEMENT:

If an owner of a building subject to this Section 9-1-16-500 does not comply with any order issued by the Building Official pursuant to this section within any time limits set forth in this section, the Building Official may order the entire building vacated and that the building remain vacated until such order has been complied with."

Section 3. Amendment to B.M.C. Title 9, Chapter 2. Chapter 2 (Fire Prevention) of Title 9 (Building Regulations) of the Burbank Municipal Code is hereby repealed, provided however that such repeal shall not affect or excuse any violations of said Chapter occurring prior to the effective date of this Ordinance. Chapter 2 of Title 9 of the Burbank Municipal Code is hereby replaced as follows:

"**CHAPTER 2. RESERVED**"

Section 4. Environmental. This Ordinance is categorically exempt under Section 15061(b)(3) of the State CEQA Guidelines in that it can be seen with certainty that there is no possibility the proposed Ordinance would have a significant effect on the environment.

Section 5. Prior References. Prior references in the Burbank Municipal Code to the former 2022 California Building Code with all its parts shall be construed to apply to the corresponding provisions of the new codes being proposed for adoption.

Section 6. Severability. If any provision of this Ordinance or its application is held invalid by a court of competent jurisdiction, such invalidity shall not affect other provisions, sections, or applications of the Ordinance which can be given effect without the invalid provision or application, and to this end each phrase, section, sentence, or word is declared to be severable.

Section 7. Certification and Publication. The City Clerk shall certify to the passage of this Ordinance and cause the City Attorney Synopsis of this Ordinance to be published once in a newspaper of general circulation within fourteen (14) days of adoption, published and circulated in the City of Burbank, California. The City Clerk shall insert the appropriate Council resolution number making the necessary findings for the building code amendments as applicable in this ordinance.

Section 8. Execution. The City Manager or their designee, including the Building Official, is authorized to execute any action necessary to codify these sections, amendments thereto, and revisions into the BMC.

Section 9. **Effective Date.** This Ordinance shall become effective at 12:01 a.m. January 1, 2026.

PASSED AND ADOPTED this ___ day of _____, 2025.

_____
Nikki Perez
Mayor

Approved as to Form
Office of the City Attorney

Attest:

_____
Kimberley Clark, City Clerk

By: _____
Ray Johal
Senior Assistant City Attorney

STATE OF CALIFORNIA)
COUNTY OF LOS ANGELES) ss.
CITY OF BURBANK)

I, Kimberley Clark, City Clerk of the City of Burbank, do hereby certify that the foregoing Ordinance No. _____ was duly and regularly passed and adopted by the Council of the City of Burbank at its regular meeting held on the __ day of _____ 2025, by the following vote:

AYES:

NOES:

ABSENT:

I further certify that said Synopsis was published as required by law in a newspaper of general circulation in the City of Burbank, California on the ____ day of _____, 2025.

_____
Kimberley Clark, City Clerk

RESOLUTION NO. _____

A RESOLUTION OF THE COUNCIL OF THE CITY OF BURBANK MAKING EXPRESS FINDINGS AND DETERMINATIONS THAT MODIFICATIONS TO THE 2025 CALIFORNIA BUILDING STANDARDS CODE ARE REASONABLY NECESSARY BECAUSE OF LOCAL CLIMATIC, GEOLOGICAL, TOPOGRAPHICAL, OR ENVIRONMENTAL CONDITIONS

THE COUNCIL OF THE CITY OF BURBANK FINDS:

A. Certain building standards and other related model codes are adopted by the State of California, as set forth in Title 24 of the California Code of Regulations and are known as the "California Building Standards Code." The California Building Standards Code consists of the California Administrative Code, California Building Code, California Residential Code, California Electrical Code, California Mechanical Code, California Plumbing Code, California Energy Code, California Wildland-Urban Interface Code, California Historical Building Code, California Fire Code, California Existing Building Code, California Green Building Standards Code, and California Referenced Standards Code.

B. The California Building Standards Code becomes applicable to the City of Burbank upon its effective date unless amended by the City pursuant to Health and Safety Code Section 17958.

C. Health and Safety Code Section 17958.5 authorizes the City to make reasonably necessary changes or modifications to the State adopted building codes, including the California Building Standards Code, based on local climatic, geological, topographical, or environmental conditions.

D. Prior to making such changes, Health and Safety Code Section 17958.7 requires the City Council to make express findings of the necessity for the modifications to the building standards contained in the California Building Standards Code.

E. The Council of the City of Burbank has determined that modifications to the California Building Standards Code, 2025 Edition, as described herein, are reasonably necessary due to local climatic, geological, topographical, or environmental conditions, and hereby makes express findings of the necessity for such modifications.

F. The City has previously adopted by reference portions of prior editions of the California Building Standards Code and International Property Maintenance Code, with local amendments, additions, and deletions thereto. The City desires to reaffirm as provided in Title 9 of the Burbank Municipal Code that it has adopted by reference the most current versions of the California Building Standards Code and International Property Maintenance Code and is not subject to the provisions of the 2025 California

Building Standards Code where such provisions are modified specifically to address local conditions in the City of Burbank and were in effect prior to 10/01/2025.

THE COUNCIL OF THE CITY OF BURBANK RESOLVES:

Section 1. **Incorporation of Findings.** The City Council of the City of Burbank hereby finds that the above findings are true and correct and are hereby incorporated by reference.

Section 2. **Express Findings**. In support of these modifications and changes, the City Council hereby expressly finds that the following amendments and modifications to building standards contained in the 2025 California Building Standards Code, as adopted by the City, are reasonably necessary due to the following local climatic, geological, topographical, or environmental conditions in the case of amendments to the California Green Building Standards Code:

(1) **General Findings**

(a) The presence of the Verdugo Mountains at the eastern border of the City allows wind patterns during certain climatic conditions and certain periods of the year. Further, intermittent Santa Ana wind conditions occur from September to March allowing conditions that create the potential for high velocity winds with high temperature. In addition, the region is within a climate system capable of producing major winds, fire and rain related disasters, including but limited to, those caused by the Santa Ana winds and El Niño (or La Niña) subtropical-like weather. (Climatic)

(b) The City of Burbank is located within the Verdugo–San Fernando Valley region of Southern California, which regularly experiences extreme arid conditions and prolonged periods of severe drought. These conditions contribute to dangerously dry brush and vegetation in the Wildland–Urban Interface of the Verdugo Hills, an area identified as a Fire Hazard Severity Zone by the Office of the State Fire Marshal. Recent wildfires such as the Palisades, Eaton, and Bethany fires underscore the growing threat these conditions pose to nearby communities and highlight the ongoing risk of wildfire ignition and spread in similarly vulnerable regions like Burbank. (Climatic)

(c) The Safety Element of the General Plan identifies earthquake fault risk in the City due to faults located within and nearby the City boundaries such as the Verdugo Fault, the Santa Monica-Hollywood-Raymond Fault and the San Andreas Fault. The close proximity of these and other faults are capable of producing earthquakes, foreshocks and aftershocks of significant magnitude and intensity that require a higher order to seismic resilience in building design and construction. (Geological)

(d) The Los Angeles region has a vast and complex network of earthquake faults. Some of these faults, like the previously unknown Northridge Fault are blind thrust faults that earth scientists believe are capable of intense ground shaking similar or greater in size than the January 17, 1994, Northridge Earthquake. The unpredictable locations of these blind thrust faults heighten regional seismic hazards and present a growing danger to public safety. (Geological)

(e) The Safety Element of the General Plan also identifies areas within the City having liquefiable soils that have the potential of allowing greater damage to building structures in an earthquake. Liquefaction is a very destructive secondary effect of strong seismic shaking where a loss of bearing strength occurs along with ground oscillations in the supporting soils. (Geological)

(f) Several existing buildings are located on parcels in the City of Burbank on hilly terrain with slopes that create grading, drainage, foundation, infrastructure, utility and emergency access challenges. (Topographical)

(g) As a result of climate change, extreme heat events in California and the Los Angeles region are becoming more frequent, more intense, and longer lasting, with the trend expected to continue as climate change worsens. Extreme heat can exacerbate heat-related illnesses and deaths, while also affecting communities indirectly through energy disruption and spikes in energy prices, impacting affordability. (Climatic and Environmental)

(2) **Specific Findings**

(h) The City of Burbank is a densely populated area having buildings and structures constructed over and near a vast array of fault systems capable of producing major earthquakes, including but not limited to the 1994 Northridge Earthquake, the 1987 Whittier Narrows Earthquake, the 1971 San Fernando Earthquake and the 1933 Long Beach Earthquake. Additionally, the topography within the City of Burbank includes significant hillsides with narrow and winding access that makes timely response by fire suppression vehicles challenging and difficult. In addition, the region is within a climate system capable of producing major winds, fire and rain related disasters, including but not limited to those caused by the Santa Ana winds and El Niño (or La Niña) subtropical-like weather. This region is especially susceptible to more active termite and wood attacking insects and microorganisms.

1. 9-1-2-1206.4.1: ALTERNATE SOUND TRANSMISSION CONTROL ASSEMBLIES FOR NEW SINGLE-FAMILY DWELLINGS
Modification to CBSC Part 2, Chapter 12. This amendment is the same as in the 2022 Burbank Municipal Code. The proposed modification to provide construction standards to meet allowable interior noise levels and is necessary based on local environmental conditions.

2. 9-1-2-1403.3.3: WOOD SHAKES AND SHINGLES PROHIBITED
   Modification to CBSC Part 2, Chapter 14. This amendment is the same as in the 2022 Burbank Municipal Code. The proposed modification to limit the use of wood materials for siding and is necessary based on local climatic and environmental conditions.

3. 9-1-2-1403.3.4: EXISTING WOOD EXTERIOR REPAIRS
   Modification to CBSC Part 2, Chapter 14. This amendment is the same as in the 2022 Burbank Municipal Code. The proposed modification to limit the use of wood materials for siding and is necessary based on local climatic and environmental conditions.

4. 9-1-2-1404.2: WEATHER PROTECTION
   Modification to CBSC Part 2, Chapter 14. This amendment is the same as in the 2022 Burbank Municipal Code. The proposed modification to limit the use of wood materials for siding and is necessary based on local climatic and environmental conditions.

5. 9-1-2-1405.1.1: COMBUSTIBLE WALL COVERINGS
   Modification to CBSC Part 2, Chapter 14. This amendment is the same as in the 2022 Burbank Municipal Code. The proposed modification to limit the use of wood materials for siding and is necessary based on local climatic and environmental conditions.

6. 9-1-2-1501.1.1: WOOD ROOFS PROHIBITED
   Modification to CBSC Part 2, Chapter 15. This amendment is the same as in the 2022 Burbank Municipal Code. The proposed modification to limit the use of wood materials for roofing and is necessary based on local climatic and environmental conditions.

7. 9-1-2-1507.8: WOOD SHINGLES
   Modification to CBSC Part 2, Chapter 15. This amendment is the same as in the 2022 Burbank Municipal Code. The proposed modification to limit the use of wood materials for roofing and is necessary based on local climatic and environmental conditions.

8. 9-1-2-1507.9: WOOD SHAKES
   Modification to CBSC Part 2, Chapter 15. This amendment is the same as in the 2022 Burbank Municipal Code. The proposed modification to limit the use of wood materials for roofing and is necessary based on local climatic and environmental conditions.

9. 9-1-2-1512.3: ROOF RECOVER
   Modification to CBSC Part 2, Chapter 15. This amendment is the same as in the 2022 Burbank Municipal Code. The proposed modification to limit the use of wood

materials for roofing and is necessary based on local climatic and environmental conditions.

10. 9-1-2-1512.3.1: ROOF RECOVERING OVER WOOD SHINGLES OR SHAKES
Modification to CBSC Part 2, Chapter 15. This amendment is the same as in the 2022 Burbank Municipal Code. The proposed modification to limit the use of wood materials for roofing and is necessary based on local climatic and environmental conditions.

11. 9-1-2-1613.8: AMENDMENTS TO ASCE 7
Modification to CBSC Part 2, Chapter 16. This amendment is the same as in the 2022 Burbank Municipal Code. The proposed modification to limit mixed structural system to two stories is intended to improve quality of construction and is necessary based on local geological conditions.

The proposed modification to require special anchorage of the diaphragm to the wall and limit the allowable shear will address and clarify special needs for concrete and masonry construction with flexible wood diaphragm and is necessary based on local geological conditions.

The proposed modification to omit the importance factor in the equation ensures that a safe seismic separation distance is maintained for important facilities from adjoining structures and is necessary based on local geological conditions.

12. 9-1-2-1613.9: SEISMIC DESIGN PROVISIONS FOR HILLSIDE BUILDINGS
Modification to CBSC Part 2, Chapter 16. This amendment is the same as in the 2022 Burbank Municipal Code. The proposed modification establishes design parameters to better mitigate and limit property damage that are the results of increased seismic forces which are imparted upon hillside buildings and structures is necessary based on local geological and topographical conditions.

13. 9-1-2-1613.10: SUSPENDED CEILINGS
Modification to CBSC Part 2, Chapter 16. This amendment is the same as in the 2022 Burbank Municipal Code. The proposed modification requiring safe design and construction requirements for ceiling suspension systems to resist seismic loads is intended to minimize the amount of damage within a building and is necessary based on local geological conditions.

14. 9-1-2-1704.6: STRUCTURAL OBSERVATIONS
Modification to CBSC Part 2, §§ 1704.6, 1704.6.1. This amendment is the same as in the 2022 Burbank Municipal Code. The proposed modification to require the registered design professional in responsible charge for the structural design to observe the construction will help ensure acceptable standards of workmanship

are provided and to improve the quality of the observation and is necessary based on local geological conditions.

15. 9-1-2-1705.3: CONCRETE CONSTRUCTION
Modification to CBSC Part 2, § 1705.3. This amendment is the same as in the 2022 Burbank Municipal Code. The proposed modification to require special inspection for concrete with a compressive strength greater than 2,500 psi will improve quality of control during construction and is necessary based on local geological conditions.

16. 9-1-2-1705.13: SPECIAL INSPECTIONS FOR SEISMIC RESISTANCE
Modification to CBSC Part 2, § 1705.13. This amendment is the same as in the 2022 Burbank Municipal Code. The proposed modification to require special inspections for detached one- or two-family dwellings not exceeding two stories above grade plane assigned to Seismic Design Category D, E and F will help ensure that acceptable standards of workmanship and quality of construction are provided and is necessary based on local geological conditions.

17. 9-1-2-1807.1.4: PERMANENT WOOD FOUNDATION SYSTEMS
Modification to CBSC Part 2, § 1807.1.4. This amendment is the same as in the 2022 Burbank Municipal Code. The proposed modification to prohibit the use of wood for foundation support or retaining earth lateral pressure as well as limit prescriptive design provisions will mitigate potential problems or deficiencies due to the surrounding environment and is necessary based on local climatic and geological conditions.

18. 9-1-2-1807.1.6: PRESCRIPTIVE DESIGN OF CONCRETE AND MASONRY FOUNDATION WALLS
Modification to CBSC Part 2, § 1807.1.6. This amendment is the same as in the 2022 Burbank Municipal Code. The proposed modification to prohibit prescriptive design provisions for foundation walls is due to plain concrete having performed poorly in withstanding the cyclic forces resulting from seismic events. Requiring the walls to be designed by a registered design professional will ensure that the proper analysis of the structure takes into account the surrounding condition. These changes are necessary due to local geological conditions.

19. 9-1-2-1807.2: RETAINING WALLS
Modification to CBSC Part 2, § 1807.2. This amendment is the same as in the 2022 Burbank Municipal Code. The proposed modification to prohibit the use of wood foundation systems as well as limit prescriptive design provisions will mitigate potential problems or deficiencies due to the proliferation of wood destroying organisms and is necessary based on local climatic and geological conditions.

20. 9-1-2-1809.3: STEPPED FOOTINGS
Modification to CBSC Part 2, § 1809.3. This amendment is the same as in the 2022 Burbank Municipal Code. The proposed modification to require minimum

reinforcement in stepped footings is intended to improve performance of buildings and structures and is necessary based on local geological conditions.

21. 9-1-2-1809.7: PRESCRIPTIVE FOOTINGS FOR LIGHT-FRAME CONSTRUCTION
Modification to CBSC Part 2, § 1809.7. This amendment is the same as in the 2022 Burbank Municipal Code. The proposed modification to limit the use of the prescriptive design provisions and under-reinforced or plain concrete is to ensure that the proper analysis of the structure takes into account the surrounding condition and is necessary based on local geological conditions.

22. 9-1-2-1809.12: TIMBER FOOTINGS
Modification to CBSC Part 2, § 1809.12. This amendment is the same as in the 2022 Burbank Municipal Code. The proposed modification to prohibit the use of timber footings will mitigate potential problems or deficiencies due to the proliferation of wood-destroying organisms and is necessary based on local climatic and geological conditions.

23. 9-1-2-1810.3.2.4: TIMBER
Modification to CBSC Part 2, § 1810.3.2.4. This amendment is the same as in the 2022 Burbank Municipal Code. The proposed modification to prohibit the use of timber deep foundation will mitigate potential problems or deficiencies due to the proliferation of wood-destroying organisms and is necessary based on local climatic and geological conditions.

24. 9-1-2-1905.1: CONCRETE - AMENDMENTS TO ACI 318
Modification to CBSC Part 2, § 1905.6.2. This amendment is the same as in the 2022 Burbank Municipal Code. The proposed modification to require minimum reinforcement to address the problem of poor performance of plain or under-reinforced footings during a seismic event is necessary based on local geological conditions.

Modification to CBSC Part 2, § 1905.8, 1905.9, 1905.10. This amendment is the same as in the 2022 Burbank Municipal Code. The proposed modification to increase confinement in critical columns, limiting the use of highly gravity loaded walls, and increase concrete coverage in thin slabs will help to prevent failure of the structure and is necessary based on local geological conditions.

25. 9-1-2-2304.10.2: FASTENER REQUIREMENTS
Modification to CBSC Part 2, § 2304.10.2. This amendment is the same as in the 2022 Burbank Municipal Code. The proposed modification to limit the use of staple fasteners to resist or transfer seismic load improve the performance of buildings and structures during a seismic event and is necessary based on local geological conditions.

26. 9-1-2-2304.10.3.1: QUALITY OF NAILS
Modification to CBSC Part 2, § 2304.10.3.1. This amendment is the same as in the 2022 Burbank Municipal Code. The proposed modification to require mechanically driven nails to have the same dimensions as hand-driven nails will result in improved quality of construction and performance of wood structural panel shear walls and is necessary based on local geological conditions.

27. 9-1-2-2304.12.2.8: WOOD USED IN RETAINING WALLS AND CRIBS
Modification to CBSC Part 2, § 2304.12.2.8. This amendment is the same as in the 2022 Burbank Municipal Code. The proposed modification to prohibit the use of wood in retaining or crib walls will mitigate potential problems or deficiencies due to the proliferation of wood-destroying organisms and is necessary based on local climatic and geological conditions.

28. 9-1-2-2305.4: HOLD-DOWN CONNECTORS
Modification to CBSC Part 2, § 2305.4. This amendment is the same as in the 2022 Burbank Municipal Code. The proposed modification to establish minimum performance requirements for hold-down connectors will reduce failure of wood structural panel shear walls due to excessive deflection and is necessary based on local geological conditions.

29. 9-1-2-2306.2: WOOD-FRAME DIAPHRAGMS
Modification to CBSC Part 2, § 2306.2. This amendment is the same as in the 2022 Burbank Municipal Code. The proposed modification to place design and construction limits on staples as fasteners used in wood structural panel or diaphragms not substantiated with cyclic testing will help to maintain minimum quality of construction and performance standards of structures and is necessary based on local geological conditions.

30. 9-1-2-2306.3: WOOD-FRAME SHEAR WALLS
Modification to CBSC Part 2, § 2306.3. This amendment is the same as in the 2022 Burbank Municipal Code. The proposed modification to place design and construction limits on stapled nail fasteners used in wood structural panel shear walls or diaphragms not substantiated with cyclic testing will help to maintain minimum quality of construction and performance standards of structures and is necessary based on local geological conditions.

31. 9-1-2-2307.2: LRFD DESIGN - WOOD-FRAME SHEAR WALLS
Modification to CBSC Part 2, § 2307.2. This amendment is the same as in the 2022 Burbank Municipal Code. The proposed modification to provide specific detailing requirements will improve the performance of buildings and structures and is necessary based on local geological conditions.

32. 9-1-2-2308.10: WALL BRACING
Modification to CBSC Part 2, §§ 2308.10, 2308.10.5.1, 2308.10.5.2. This amendment is the same as in the 2022 Burbank Municipal Code. The proposed

modification requiring minimum sheathing thickness and nailing type and size will help to maintain minimum quality of construction and performance standards of structures and is necessary based on local geological conditions.

33. 9-1-2-2308.10.8.1: FOUNDATION REQUIREMENTS
Modification to CBSC Part 2, § 2308.10.8.1. This amendment is the same as in the 2022 Burbank Municipal Code. The proposed modification to require continuous footings under braced wall lines will improve performance of buildings or structure during a seismic event and is necessary based on local geological conditions.

34. 9-1-2-2308.10.9: ATTACHMENT OF SHEATHING
Modification to CBSC Part 2, § 2308.6.9. This amendment is the same as in the 2022 Burbank Municipal Code. The proposed modification to provide specific detailing requirements will improve the performance of buildings and structures and is necessary based on local geological conditions.

35. 9-1-2-C105: (APPENDIX C) COMMERCIAL STABLES
Modification to CBSC Part 2, Appendix C. This amendment is the same as in the 2022 Burbank Municipal Code. The proposed modification to provide fire resistant construction standards for commercial stables and is necessary based on local climatic conditions.

36. 9-1-2R-R301.1.3.2: WOODFRAME STRUCTURES
Modification to CBSC Part 2.5, § R301.1.3.2. This amendment is the same as in the 2022 Burbank Municipal Code. The proposed modification to require construction documents for wood frame construction greater than one story in height or with a basement to be approved and stamped by a California licensed architect or engineer is intended to assure that both the structural design and prescriptive requirement of the code are properly utilized and presented and is necessary based on local geological conditions.

37. 9-1-2R-R301.1.5: SEISMIC DESIGN PROVISIONS FOR BUILDINGS CONSTRUCTED ON OR INTO SLOPES STEEPER THAN ONE UNIT VERTICAL IN THREE UNITS HORIZONTAL (33.3 PERCENT SLOPE)
Modification to CBSC Part 2.5, § R301.1.5. This amendment is the same as in the 2022 Burbank Municipal Code. The proposed modification establishes design parameters to better mitigate and limit property damage resulting from increased seismic forces which are imparted upon hillside buildings and structures and is necessary based on local topographical and geological conditions.

38. 9-1-2R-R301.2.2.6: IRREGULAR BUILDINGS
Modification to CBSC Part 2.5, § R301.2.2.6. This amendment is the same as in the 2022 Burbank Municipal Code. The proposed amendment limits the type of irregular conditions within buildings that may lead to higher structural damage during a seismic event and is necessary based on local geological conditions.

39. 9-1-2R-R301.2.2.11: ANCHORAGE OF MECHANICAL, ELECTRICAL, OR PLUMBING COMPONENTS AND EQUIPMENT
Modification to CBSC Part 2.5, Chapter 3. This amendment is the same as in the 2022 Burbank Municipal Code. The proposed modification to provide anchorage design provisions for non-structural components and is necessary based on local geological conditions.

40. 9-1-2R-R401.1: FOUNDATIONS
Modification to CBSC Part 2.5, § R401.1. This amendment is the same as in the 2022 Burbank Municipal Code. The proposed modification to prohibit the use of wood foundation systems as well as limit prescriptive design provisions will mitigate potential problems or deficiencies due to the proliferation of wood-destroying organisms and is necessary based on local climatic and geological conditions.

41. 9-1-2R-R403.1.2: CONTINUOUS FOOTING IN SEISMIC DESIGN CATEGORIES D_0, D_1 AND D_2
Modification to CBSC Part 2.5, §§ R403.1.2. This amendment is the same as in the 2022 Burbank Municipal Code. The proposed modification to require continuous footings under braced wall lines, require reinforcement in one- and two-family dwelling, and minimum reinforcement in stepped footings will improve performance of buildings or structure during a seismic event and minimize potential problems or deficiencies and is necessary based on local geological conditions.

42. 9-1-2R-R403.1.3.6: ISOLATED CONCRETE FOOTINGS
Modification to CBSC Part 2.5, Chapter 4. This amendment is the same as in the 2022 Burbank Municipal Code. The proposed modification to restrict use of isolated concrete footings to certain Seismic Design Categories and is necessary based on local geological conditions.

43. 9-1-2R-R403.1.5: SLOPE
Modification to CBSC Part 2.5, Chapter 4. This amendment is the same as in the 2022 Burbank Municipal Code. The proposed modification to reinforcement of stepped footings in certain Seismic Design Categories and is necessary based on local geological conditions.

44. 9-1-2R-R404.2: WOOD FOUNDATION WALLS
Modification to CBSC Part 2.5, § R404.2. This amendment is the same as in the 2022 Burbank Municipal Code. The proposed modification to prohibit the use of wood foundation wall will mitigate potential problems or deficiencies due to the proliferation of wood-destroying organisms and is necessary based on local geological conditions.

45. 9-1-2R-R501.1: FLOORS
Modification to CBSC Part 2.5, Chapter 5. This amendment is the same as in the 2022 Burbank Municipal Code. The proposed modification to provide anchorage design provisions for non-structural components and is necessary based on local geological conditions.

46. 9-1-2R-R503.2.4: OPENINGS IN HORIZONTAL DIAPHRAGMS
Modification to CBSC Part 2.5, § R503.2.4. This amendment is the same as in the 2022 Burbank Municipal Code. The proposed modification to require specific detailing at large floor openings is intended to address the poor performance of floor diaphragms with openings and limit or reduce property damages during a seismic event and is necessary based on local geological conditions.

47. 9-1-2R-R602.3(1): FASTENING SCHEDULE
Modification to CBSC Part 2.5, § R602.3(1). This amendment is the same as in the 2022 Burbank Municipal Code. The proposed modification to place design and construction limits on staples as fasteners used in wood structural panel or diaphragms not substantiated with cyclic testing will help to maintain minimum quality of construction and performance standards of structures and is necessary based on local geological conditions.

48. 9-1-2R-R602.3.2: TOP PLATE
Modification to CBSC Part 2.5, § R602.3.2. This amendment is the same as in the 2022 Burbank Municipal Code. The proposed modification to place design and construction limits on staples as fasteners used in wood structural panel or diaphragms not substantiated with cyclic testing will help to maintain minimum quality of construction and performance standards of structures and is necessary based on local geological conditions.

49. 9-1-2R-R602.10.2.3: MINIMUM NUMBER OF BRACED WALL PANELS
Modification to CBSC Part 2.5, § R602.10.2.3. This amendment is the same as in the 2022 Burbank Municipal Code. The proposed modification reduces the aspect ratio and is necessary based on local geological conditions.

50. 9-1-2R-R602.10.3: TABLE R602.10.3(3)
Modification to CBSC Part 2.5, Table R602.10.3(3). This amendment is the same as in the 2022 Burbank Municipal Code. The proposed modification to increase the length and limit the location where shear walls sheathed with lath, plaster or gypsum board are used will help to ensure that multi-level buildings will resist higher levels of seismic loads and is necessary based on local geological conditions.

51. 9-1-2R-R602.10.4: BRACING METHODS
Modification to CBSC Part 2.5, § R602.10.4. This amendment is the same as in the 2022 Burbank Municipal Code. The proposed modification to place design and construction limits on stapled nail fasteners used in wood structural panel shear

walls not substantiated with cyclic testing and requiring minimum sheathing thickness and nailing type and size will help to maintain minimum quality of construction and performance standards of structures and is necessary based on local geological conditions.

52. 9-1-2R-R602.10.5: MINIMUM LENGTH OF BRACED WALL PANELS
Modification to CBSC Part 2.5, § R602.10.5. This amendment is the same as in the 2022 Burbank Municipal Code. The proposed modification ensures that the structural integrity with respect to “maximum shear wall aspect ratios” is maintained and is necessary based on local geological conditions.

53. 9-1-2R-R602.10.6.1: METHOD ABW
Modification to CBSC Part 2.5, § R602.10.6.1. This amendment is the same as in the 2022 Burbank Municipal Code. The proposed modification requiring minimum sheathing thickness and nailing type and size is necessary based on local geological conditions.

54. 9-1-2R-R602.10.6.4: METHOD CS-PF
Modification to CBSC Part 2.5, § R602.10.6.2. This amendment is the same as in the 2022 Burbank Municipal Code. The proposed modification requiring minimum sheathing thickness and nailing type and size is necessary based on local geological conditions.

55. 9-1-2R-R606.12.2.2.3: REINFORCEMENT REQUIREMENTS FOR MASONRY ELEMENTS
Modification to CBSC Part 2.5, § R606.12.2.2.3. This amendment is the same as in the 2022 Burbank Municipal Code. The proposed modification to increase reinforcements will ensure that the ductility requirements for buildings in high seismic region meet the intent of the code and limit potential property damages and is necessary based on local geological conditions.

56. 9-1-2R-R703.6: WOOD SHAKES AND SHINGLES
Modification to CBSC Part 2.5, Chapter 7. This amendment is the same as in the 2022 Burbank Municipal Code. The proposed modification to limit the use of wood materials for siding and is necessary based on local climatic and environmental conditions.

57. 9-1-2R-R803.2.4: OPENINGS IN HORIZONTAL DIAPHRAGMS
Modification to CBSC Part 2.5, § R803.2.4. This amendment is the same as in the 2022 Burbank Municipal Code. The proposed modification to require specific detailing at large roof openings is intended to address the poor performance of roof diaphragms with openings and limit or reduce property damages during a seismic event and is necessary based on local geological conditions.

58. 9-1-2R-R806.5: UNVENTED ATTIC AND UNVENTED ENCLOSED RAFTER ASSEMBLIES
Modification to CBSC Part 2.5, Chapter 8. This amendment is the same as in the 2022 Burbank Municipal Code. The proposed modification to limit the use of wood materials for roofing and is necessary based on local climatic and environmental conditions.

59. 9-1-2R-R902.2: FIRE-RETARDANT-TREATED SHINGLES AND SHAKES
Modification to CBSC Part 2.5, Chapter 9. This amendment is the same as in the 2022 Burbank Municipal Code. The proposed modification to limit the use of wood materials for roofing and is necessary based on local climatic and environmental conditions.

60. 9-1-2R-R905.7: WOOD SHINGLES
Modification to CBSC Part 2.5, Chapter 9. This amendment is the same as in the 2022 Burbank Municipal Code. The proposed modification to limit the use of wood materials for roofing and is necessary based on local climatic and environmental conditions.

61. 9-1-2R-R905.8: WOOD SHAKES
Modification to CBSC Part 2.5, Chapter 9. This amendment is the same as in the 2022 Burbank Municipal Code. The proposed modification to limit the use of wood materials for roofing and is necessary based on local climatic and environmental conditions.

62. 9-1-2R-R908.4: ROOF RECOVER
Modification to CBSC Part 2.5, Chapter 9. This amendment is the same as in the 2022 Burbank Municipal Code. The proposed modification to limit the use of wood materials for roofing and is necessary based on local climatic and environmental conditions.

63. 9-1-2R-R908.4.1: ROOF RECOVERING OVER WOOD SHINGLES OR SHAKES Modification to CBSC Part 2.5, Chapter 9. This amendment is the same as in the 2022 Burbank Municipal Code. The proposed modification to limit the use of wood materials for roofing and is necessary based on local climatic and environmental conditions.

64. 9-1-7-604.3.1: FIRE HAZARD REDUCTION IN VERY HIGH, HIGH, AND MODERATE FIRE HAZARD SEVERITY ZONES
Modification to CBSC Part 7, Chapter 6. The proposed modification to provide guidelines and methods on fire protection and maintenance of defensible spaces and is necessary based on local climatic conditions.

65. 9-1-9-307.1.1.1 - OPEN BURNING GENERAL
Modifications to CBSC Part 9, Chapter 3. This amendment is the same as in the 2022 Burbank Municipal Code. The proposed modification to limit the open burning is necessary based on local climatic and topographical conditions

66. 9-1-9-307.1.1.2 - STARTLIGHT AMPHITHEATER– OPEN FLAMES AND BURNING PROHIBITED
Modification to CBSC Part 9, Chapter 3. This amendment is the same as in the 2022 Burbank Municipal Code. The proposed modification to limit the open burning is necessary based on local climatic and topographical conditions.

67. 9-1-9-503.1.2.1 HIGH-RISE AND MID-RISE BUILDINGS
Modification to CBSC Part 9, Chapter 5. This amendment is the same as in the 2022 Burbank Municipal Code. The proposed modification specifies access requirements to mid and high-rise buildings is necessary for local climatic conditions.

68. 9-1-9-503.2.1.1: FIRE APPARATUS ACCESS ROADS:
Modification to CBSC Part 9, Chapter 5. The proposed modification specifies access dimension requirements for fire apparatus access roads and is necessary for local climatic conditions.

69. 9-1-9-903.2(a) - REQUIRED INSTALLATIONS
Modification of CBSC Part 9, Chapter 9. This amendment is the same as in the 2022 Burbank Municipal Code. The proposed modification to require and/or exempt automatic fire sprinkler systems is necessary based on local climatic conditions.

70. 9-1-9-903.2(b) - SPECIAL PROVISIONS FOR ALL BUILDINGS
Modification of CBSC Part 9, Chapter 9. This amendment is the same as in the 2022 Burbank Municipal Code. The proposed modification to specify special provisions for automatic fire sprinkler system is necessary based on local climatic conditions.

71. 9-1-9-903.2.8(a) - GROUP R OCCUPANCIES
Modification of CBSC Part 9, Chapter 9. This amendment is the same as in the 2022 Burbank Municipal Code. The proposed modification to provide specific requirements for residential occupancies is necessary based on local climatic conditions.

72. 9-1-9-903.4.2.1 - SPRINKLER SYSTEM MONITORING AND ALARMS
Modification of CBSC Part 9, Chapter 9. This amendment is the same as in the 2022 Burbank Municipal Code. The proposed modification to provide additional requirements to automatic sprinkler systems is necessary based on local climatic conditions.

73. 9-1-9-5608.1(a) - PROHIBITION
Modification of CBSC Part 9, Chapter 56. This amendment is the same as in the 2022 Burbank Municipal Code. The proposed modification to prohibit the

manufacturing, possession, selling, or discharge of fireworks is necessary based on local climatic, environmental and topographical conditions.

74. 9-1-11-4.509: COOL ROOF FOR REDUCTION OF HEAT ISLAND EFFECT
Modification to CBSC Part 11, Chapters 4. This amendment is the same as in the 2022 Burbank Municipal Code. The proposed modification to incorporate cool roof standards for the reduction of heat island effect is intended to address the scarcity of environmental resources in the City of Burbank due to varying and immoderate temperature and weather conditions. Adding mandatory requirements for cool roofs will achieve a greater reduction in greenhouse gases, higher efficiencies of energy, and improved environmental air quality and is necessary based on local climatic conditions.

75. 9-1-11-5.509: COOL ROOF FOR REDUCTION OF HEAT ISLAND EFFECT
Modification to CBSC Part 11, Chapters 5. This amendment is the same as in the 2022 Burbank Municipal Code. The proposed modification to incorporate cool roof standards for the reduction of heat island effect is intended to address the scarcity of environmental resources in the City of Burbank due to varying and immoderate temperature and weather conditions. Adding mandatory requirements for cool roofs will achieve a greater reduction in greenhouse gases, higher efficiencies of energy, and improved environmental air quality and is necessary based on local climatic conditions.

Section 3. **Additional Findings.** The City Council finds that the following table attached hereto as Exhibit A, and incorporated herein by this reference, sets forth the sections of the 2025 California Building Standards Code provisions that have been modified by the City of Burbank pursuant to Ordinance No. _____, and the associated local climatic, geological, topographical, or environmental conditions described in Section 2, above, that support such modifications.

Section 4. **Prior References.** Any reference to the 2022 Building Code with all its parts shall be construed to apply to the corresponding provisions of the new codes being proposed for adoption, if applicable.

Section 5. **Certification and Publication.** The City Clerk shall certify the adoption of this Resolution, and the Building Official shall forward a certified copy of same and Ordinance No. _____ to the California Building Standards Commission.

PASSED and ADOPTED this ____ day of _____, 2025.

_____
Nikki Perez
Mayor

Approved as to Form
Office of the City Attorney

Attest:

_____
Kimberley Clark, City Clerk

By:_____
Ray Johal
Senior Assistant City Attorney

STATE OF CALIFORNIA)
COUNTY OF LOS ANGELES) ss.
CITY OF BURBANK)

I, Kimberley Clark, City Clerk of the City of Burbank, do hereby certify that the foregoing Resolution was duly and regularly passed and adopted by a vote of the Council of the City of Burbank at its regular meeting held on the _____ day of _____, 2025, by the following vote:

AYES:

NOES:

ABSENT:

_____
Kimberley Clark, City Clerk

BMC Section	AMENDED CBSC Section	BMC Section Title	Justification from Section 2 of this Resolution	Findings/ Local Conditions
Building Administrative Amendments of the Burbank Municipal Code				
9-1-1-101	N/A	General	-	Administrative
9-1-1-102	N/A	Definitions	-	Administrative
9-1-1-103	N/A	Organization and Enforcement	-	Administrative
9-1-1-104	N/A	Duties and Powers of the Building Official	-	Administrative
9-1-1-105	N/A	Permits	-	Administrative
9-1-1-105.2	N/A	Work Exempt From Permit	-	Administrative
9-1-1-105.5.1	N/A	Permit Expiriation	-	Administrative
9-1-1-105.8	N/A	To Whom a Permit May Be Issued	-	Administrative
9-1-1-105.9	N/A	Appeals	-	Administrative
9-1-1-105.10	N/A	Construction Hours	-	Administrative
9-1-1-107	N/A	Submittal Documents	-	Administrative
9-1-1-107.3.1	N/A	Approval of Construction Documents	-	Administrative
9-1-1-109	N/A	Fees	-	Administrative
9-1-1-109.4	N/A	Investigation Fees, Work Without A Permit	-	Administrative
9-1-1-109.6	N/A	Refund Policy	-	Administrative
9-1-1-110	N/A	Inspections	-	Administrative

City of Burbank: Summary of Local Amendments in the Burbank Municipal Code (BMC) to 2025 California Building Standards Code

BMC Section	AMENDED CBSC Section	BMC Section Title	Justification from Section 2 of this Resolution	Findings/ Local Conditions
9-1-1-111	N/A	Certificate of Occupancy	-	Administrative
9-1-1-113	N/A	Boards of Appeals	-	Administrative
9-1-1-114	N/A	Violations	-	Administrative
9-1-1-116	N/A	Unsafe Buildings, Structures, Equipment, Conditions	-	Administrative
9-1-1-117	N/A	Building Security	-	Administrative
Amendments to the 2025 California Administrative Code (CBSC, Part 1)				
9-1-1-2	N/A	Adoption of the 2025 California Administrative Code	-	Administrative
Amendments to the 2025 California Building Code (CBSC, Part 2)				
9-1-2	N/A	Adoption of the 2025 California Building Code	-	Administrative
9-1-2-101.1	101.1	Title	-	Administrative
9-1-2-705.3.1	705.3	Buildings on Contiguous Lots	-	Administrative
9-1-2-1206.4.1	1206.4	Alternate Sound Transmission Control Assemblies for New Single-Family Dwellings	Section (h)(1)	Enviornmental
9-1-2-1403.3.3	1403.3	Wood Shakes and Shingles Prohibited	Sections (a), (b), (h)(2)	Climatic
9-1-2-1403.3.4	1403.3	Existing Wood Exterior Repairs	Sections (a), (b), (h)(3)	Climatic
9-1-2-1404.2	1404.2	Weather Protection	Sections (a), (b), (h)(4)	Climatic
9-1-2-1405.1.1	1504.1.1	Combuestible Wall Coverings	Sections (a), (b), (h)(5)	Climatic

BMC Section	AMENDED CBSC Section	BMC Section Title	Justification from Section 2 of this Resolution	Findings/ Local Conditions
9-1-2-1501.1.1	1501.1	Wood Roofs Prohibited	Sections (a), (b), (h)(6)	Climatic
9-1-2-1507.8	1507.8	Wood Shingles	Sections (a), (b), (h)(7)	Climatic
9-1-2-1507.9	1507.9	Wood Shakes	Sections (a), (b), (h)(8)	Climatic
9-1-2-1512.3	1512.3	Roof Recover	Sections (a), (b), (h)(9)	Climatic
9-1-2-1512.3.1	1512.3.1	Roof Recovering Over Wood Shingles or Shakes	Sections (a), (b), (h)(10)	Climatic
9-1-2-1612.3	1612.3	Establishment of Flood Hazard Areas	Section (f)	Topographic
9-1-2-1613.8	1613	Amendments to ASCE 7	Sections (c), (d), (e), (h)(11)	Geological
9-1-2-1613.8.1	1613	Values for Vertical Combinations. ASCE 7, Section 12.2.3.1	Sections (c), (d), (e), (h)(11)	Geological
9-1-2-1613.8.2	1613	Wood Diaphragms. ASCE 7, Section 12.11.2.2.3	Sections (c), (d), (e), (h)(11)	Geological
9-1-2-1613.8.3	1613	Design Earthquake Displacement. ASCE 7, Section 12.8.6.3	Sections (c), (d), (e), (h)(11)	Geological
9-1-2-1613.9	1613	Seismic Design Provisions for Hillside Buildings	Sections (c), (d), (e), (f), (h)(12)	Geological
9-1-2-1613.9.1	1613	Purpose	Sections (c), (d), (e), (f), (h)(12)	Geological
9-1-2-1613.9.2	1613	Scope	Sections (c), (d), (e), (f), (h)(12)	Geological
9-1-2-1613.9.3	1613	Definitions	Sections (c), (d), (e), (f), (h)(12)	Geological
9-1-2-1613.9.4	1613	Analysis and Design	Sections (c), (d), (e), (f), (h)(12)	Geological
9-1-2-1613.9.4.1	1613	General	Sections (c), (d), (e), (f), (h)(12)	Geological

BMC Section	AMENDED CBSC Section	BMC Section Title	Justification from Section 2 of this Resolution	Findings/ Local Conditions
9-1-2-1613.9.4.2	1613	Base Level Diaphragm-Downhill Direction	Sections (c), (d), (e), (f), (h)(12)	Geological
9-1-2-1613.9.4.2.1	1613	Base for Lateral Force Design Defined	Sections (c), (d), (e), (f), (h)(12)	Geological
9-1-2-1613.9.4.2.2	1613	Base Shear	Sections (c), (d), (e), (f), (h)(12)	Geological
9-1-2-1613.9.5	1613	Base Shear Resistance-Primary Anchors	Sections (c), (d), (e), (f), (h)(12)	Geological
9-1-2-1613.9.5.1	1613	General	Sections (c), (d), (e), (f), (h)(12)	Geological
9-1-2-1613.9.5.2	1613	Location of Primary Anchors	Sections (c), (d), (e), (f), (h)(12)	Geological
9-1-2-1613.9.5.3	1613	Design of Primary Anchors and Diaphragm Struts	Sections (c), (d), (e), (f), (h)(12)	Geological
9-1-2-1613.9.5.4	1613	Limitations	Sections (c), (d), (e), (f), (h)(12)	Geological
9-1-2-1613.9.6	1613	Base Shear Resistance - Secondary Anchors	Sections (c), (d), (e), (f), (h)(12)	Geological
9-1-2-1613.9.6.1	1613	General	Sections (c), (d), (e), (f), (h)(12)	Geological
9-1-2-1613.9.6.2	1613	Secondary Anchor Capacity and Spacing	Sections (c), (d), (e), (f), (h)(12)	Geological
9-1-2-1613.9.6.3	1613	Design	Sections (c), (d), (e), (f), (h)(12)	Geological
9-1-2-1613.9.7	1613	Diaphragms Below the Base Level - Downhill Direction	Sections (c), (d), (e), (f), (h)(12)	Geological
9-1-2-1613.9.7.1	1613	Diaphragm Defined	Sections (c), (d), (e), (f), (h)(12)	Geological
9-1-2-1613.9.7.2	1613	Design Force	Sections (c), (d), (e), (f), (h)(12)	Geological
9-1-2-1613.9.7.3	1613	Design Force Resistance - Primary Anchors	Sections (c), (d), (e), (f), (h)(12)	Geological

BMC Section	AMENDED CBSC Section	BMC Section Title	Justification from Section 2 of this Resolution	Findings/ Local Conditions
9-1-2-1613.9.7.4	1613	Design Force Resistance - Secondary Anchors	Sections (c), (d), (e), (f), (h)(12)	Geological
9-1-2-1613.9.7.4.1	1613	General	Sections (c), (d), (e), (f), (h)(12)	Geological
9-1-2-1613.9.7.4.2	1613	Secondary Anchor Capacity and Spacing	Sections (c), (d), (e), (f), (h)(12)	Geological
9-1-2-1613.9.7.4.3	1613	Design	Sections (c), (d), (e), (f), (h)(12)	Geological
9-1-2-1613.9.8	1613	Primary and Secondary Anchorage and Diapragm Strut Design	Sections (c), (d), (e), (f), (h)(12)	Geological
9-1-2-1613.9.9	1613	Lateral-force-resisting elements normal to the downhill direction	Sections (c), (d), (e), (f), (h)(12)	Geological
9-1-2-1613.9.9.1	1613	General	Sections (c), (d), (e), (f), (h)(12)	Geological
9-1-2-1613.9.9.2	1613	Base Shear	Sections (c), (d), (e), (f), (h)(12)	Geological
9-1-2-1613.9.9.3	1613	Vertical Distribution of Seismic Forces	Sections (c), (d), (e), (f), (h)(12)	Geological
9-1-2-1613.9.9.4	1613	Drift Limitations	Sections (c), (d), (e), (f), (h)(12)	Geological
9-1-2-1613.9.9.5	1613	Distribution of Lateral Forces	Sections (c), (d), (e), (f), (h)(12)	Geological
9-1-2-1613.9.9.5.1	1613	General	Sections (c), (d), (e), (f), (h)(12)	Geological
9-1-2-1613.9.9.5.2	1613	Wood Structural Panel Sheathed Walls	Sections (c), (d), (e), (f), (h)(12)	Geological
9-1-2-1613.9.9.5.3	1613	Reinforced Concrete or Masonry Shear Walls	Sections (c), (d), (e), (f), (h)(12)	Geological
9-1-2-1613.9.9.6	1613	Limitations	Sections (c), (d), (e), (f), (h)(12)	Geological
9-1-2-1613.9.10	1613	Specific Design Provisions	Sections (c), (d), (e), (f), (h)(12)	Geological

BMC Section	AMENDED CBSC Section	BMC Section Title	Justification from Section 2 of this Resolution	Findings/ Local Conditions
9-1-2-1613.9.10.1	1613	Footings and Grade Beams	Sections (c), (d), (e), (f), (h)(12)	Geological/ Topographical
9-1-2-1613.9.10.2	1613	Protection against decay and termites	Sections (c), (d), (e), (f), (h)(12)	Geological/ Topographical
9-1-2-1613.9.10.3	1613	Sill Plates	Sections (c), (d), (e), (f), (h)(12)	Geological/ Topographical
9-1-2-1613.9.10.4	1613	Column Base Plate Anchorage	Sections (c), (d), (e), (f), (h)(12)	Geological/ Topographical
9-1-2-1613.9.10.5	1613	Steel Beam to Column Supports	Sections (c), (d), (e), (f), (h)(12)	Geological/ Topographical
9-1-2-1613.10	1613	Suspended Ceilings	Sections (c), (d), (e), (h)(13)	Geological
9-1-2-1613.10.1	1613	Scope	Sections (c), (d), (e), (h)(13)	Geological
9-1-2-1613.10.2	1613	General	Sections (c), (d), (e), (h)(13)	Geological
9-1-2-1613.10.3	1613	Sprinkler Heads	Sections (c), (d), (e), (h)(13)	Geological
9-1-2-1613.10.4	1613	Special Requirements for Means of Egress	Sections (c), (d), (e), (h)(13)	Geological
9-1-2-1613.10.4.1	1613	General	Sections (c), (d), (e), (h)(13)	Geological
9-1-2-1613.10.4.2	1613	Assembly Device	Sections (c), (d), (e), (h)(13)	Geological
9-1-2-1613.10.4.3	1613	Emergency Systems	Sections (c), (d), (e), (h)(13)	Geological
9-1-2-1613.10.4.4	1613	Supports for Appendage	Sections (c), (d), (e), (h)(13)	Geological
9-1-2-1704.6	1704.6	Structural Observations	Sections (c), (d), (e), (h)(14)	Geological
9-1-2-1704.6.1	1704.6.1	Structural Observations for Structures	Sections (c), (d), (e), (h)(14)	Geological

BMC Section	AMENDED CBSC Section	BMC Section Title	Justification from Section 2 of this Resolution	Findings/ Local Conditions
9-1-2-1705.3	1705.3	Concrete Construction	Sections (c), (d), (e), (h)(15)	Geological
9-1-2-1705.13	1705.13	Special Inspcections for Seismic Resistance	Sections (c), (d), (e), (h)(16)	Geological
9-1-2-1807.1.4	1807.1.4	Permanent Wood Foundation Systems	Sections (a), (b), (c), (d), (e), (h)(17)	Climatic/ Geological
9-1-2-1807.1.6	1807.1.6	Prescriptive Design of Concrete and Masonry Foundation Walls	Sections (c), (d), (e), (h)(18)	Geological
9-1-2-1807.2	1807.2	Retaining Walls	Sections (a), (b), (c), (d), (e), (h)(19)	Climatic/ Geological
9-1-2-1809.3	1809.3	Stepped Footings	Sections (c), (d), (e), (h)(20)	Geological
9-1-2-1809.7	1809.7 and T-1809.7	Prescriptive Footings for Light-Frame Construction	Sections (c), (d), (e), (h)(21)	Geological
9-1-2-1809.12	1809.12	Timber Footings	Sections (a), (b), (c), (d), (e), (h)(22)	Climatic/ Geological
9-1-2-1810.3.2.4	1810.3.2.4	Timber	Sections (a), (b), (c), (d), (e), (h)(23)	Climatic/ Geological
9-1-2-1905.1	1905	General	Sections (c), (d), (e), (h)(24)	Geological
9-1-2-1905.6.2	1905	ACI 318, Section 14.1.4	Sections (c), (d), (e), (h)(24)	Geological
9-1-2-1905.8	1905	ACI 318, Section 18.7.5	Sections (c), (d), (e), (h)(24)	Geological
9-1-2-1905.9	1905	ACI 318, Section 18.10.4	Sections (c), (d), (e), (h)(24)	Geological
9-1-2-1905.10	1905	ACI 318, Section 18.12.6	Sections (c), (d), (e), (h)(24)	Geological
9-1-2-2304.10.2	2304.10.2 and T-2304.10.2	Fastener Requirements	Sections (c), (d), (e), (h)(25)	Geological
9-1-2-2304.10.3.1	2304.10.3	Quality of Nails	Sections (c), (d), (e), (h)(26)	Geological

BMC Section	AMENDED CBSC Section	BMC Section Title	Justification from Section 2 of this Resolution	Findings/ Local Conditions
9-1-2-2304.12.2.8	2304.12.2.8	Wood Used in Retaining Walls and Cribs	Sections (a), (b), (c), (d), (e), (h)(27)	Climatic/ Geological
9-1-2-2305.4	2305	Hold-down Connectors	Sections (c), (d), (e), (h)(28)	Geological
9-1-2-2306.2	2306.2	Wood-Frame Diaphragms	Sections (c), (d), (e), (h)(29)	Geological
9-1-2-2306.3	2306.3	Wood-Frame Shear Walls	Sections (c), (d), (e), (h)(30)	Geological
9-1-2-2307.2	2307	LRFD Design - Wood-Frame Shear Walls	Sections (c), (d), (e), (h)(31)	Geological
9-1-2-2308.10	T-2308.10.1	Wall Bracing	Sections (c), (d), (e), (h)(32)	Geological
9-1-2-2308.10.5.1	2308.10.5.1	Alternate Braced Wall (ABW)	Sections (c), (d), (e), (h)(32)	Geological
9-1-2-2308.10.5.2	2308.10.5.2	Portal Frame with Hold-downs	Sections (c), (d), (e), (h)(32)	Geological
9-1-2-2308.10.8.1	2308.10.8.1	Foundation Requirements	Sections (c), (d), (e), (h)(33)	Geological
9-1-2-2308.10.9	2308.10.9	Attachment of Sheathing	Sections (c), (d), (e), (h)(34)	Geological
9-1-2-3114.1	3114.1	Intermodal Shipping Containers	-	Administrative
9-1-2-3203.1	3203	Building on Public Easement Prohibited	-	Administrative
9-1-2-3302.4	3302	Construction Fencing	-	Administrative
9-1-2-3305.1	3305.1	Facilities Required	-	Administrative
9-1-2-3305.2	3305	Garbage Containers	-	Administrative
9-1-2-C105	Appendix C	Commercial Stables	Sections (a), (b), (g), (h)(35)	Climatic

BMC Section	AMENDED CBSC Section	BMC Section Title	Justification from Section 2 of this Resolution	Findings/ Local Conditions
9-1-2-C105.1	Appendix C	Commercial stable defined	Sections (a), (b), (g), (h)(35)	Climatic
9-1-2-C105.2	Appendix C	Automatic fire-extinguishing systems required	Sections (a), (b), (g), (h)(35)	Climatic
9-1-2-C105.3	Appendix C	Living quarters; separation and fire-walls required	Sections (a), (b), (g), (h)(35)	Climatic
9-1-2-C105.6	Appendix C	Exceptions	Sections (a), (b), (g), (h)(35)	Climatic
9-1-2-G101.6	Appendix G	Warning and Disclaimer of Liability	-	Administrative
9-1-2-G103.2	Appendix G	Establishment of Flood Hazard Areas	Section (f)	Topographic
9-1-2-G104.11	Appendix G	Duties and Responsibilities of the Floodplain Administrator	-	Administrative
9-1-2-G104.11.1	Appendix G	Definition - Floodplain Administrator	-	Administrative
9-1-2-G104.11.2	Appendix G	Duties - Floodplain Administator	-	Administrative
9-1-2-J104.5	Appendix J	Fees, Bonds and Insurance - excavation and grading	-	Administrative
9-1-2-J105.3	Appendix J	Construction Site Maintenance-Excavation and Grading	-	Administrative
9-1-2-J110.3	Appendix J	Maintenance of Protective Devices - Excavation and Grading	-	Administrative
Amendments to the 2022 California Residential Code (CBSC Part 2.5)				
9-1-2R		Adoption of the 2025 California Residential Code	-	Administrative
9-1-2R-R101.1	R101.1	Title	-	Administrative
9-1-2R-R301.1.3.2	R301.1.3.2	Woodframe Structures greater than two-stories	Sections (c), (d), (h)(36)	Geological
9-1-2R-R301.1.5	R301.1	Requirements for Slopes Steeper than One-in-Three	Sections (c), (d), (e), (f), (h)(37)	Topographic/ Geological

BMC Section	AMENDED CBSC Section	BMC Section Title	Justification from Section 2 of this Resolution	Findings/ Local Conditions
9-1-2R-R301.2	R301.2	Climatic & Geographic Design Criteria	Sections (c), (d), (e), (f)	Climatic/ Geological
9-1-2R-R301.2.2.6	R301.2.2.6	Irregular Buildings	Sections (c), (d), (e), (h)(38)	Geological
9-1-2R-R301.2.2.11	R301.2	Anchorage of Mechanical, Electrical, or Plumbing Components and Equipment	Sections (c), (d), (e), (h)(39)	Geological
9-1-2R-R401.1	R401.1	Foundations	Sections (a), (b), (c), (d), (e), (h)(40)	Climatic/ Geological
9-1-2R-R403.1.2	R403.1.2	Continuous Footing in Seismic Design Categories D_0, D_1 AND D_2	Sections (c), (d), (e), (h)(41)	Geological
9-1-2R-R403.1.3.6	R403.1.3.6	Isolated Concrete Footings	Sections (c), (d), (e), (h)(42)	Geological
9-1-2R-R403.1.5	R403.1.5	Slope	Sections (c), (d), (f), (h)(43)	Geological
9-1-2R-R404.2	R404.2	Wood Foundation Walls	Sections (a), (b), (c), (d), (e), (h)(44)	Climatic/ Geological
9-1-2R-R501.1	R501.1	Floors	Sections (c), (d), (e), (h)(45)	Geological
9-1-2R-R503.2.4	R503.2	Openings in Horizontal Diaphragms	Sections (c), (d), (e), (h)(46)	Geological
9-1-2R-R602.3(1)	T-R602.3(1)	Fastening Schedule	Sections (c), (d), (e), (h)(47)	Geological
9-1-2R-602.3.2	R602.3.2	Top Plate	Sections (c), (d), (e), (h)(48)	Geological
9-1-2R-R602.10.2.3	R602.10.2.3	Minimum Number of Braced Wall Panels	Sections (c), (d), (h)(49)	Geological
9-1-2R-R602.10.3	T-R602.10.3(3)	Table R602.10.3(3)	Sections (c), (d), (h)(50)	Geological
9-1-2R-R602.10.4	T-R602.10.4	Bracing Methods	Sections (c), (d), (h)(51)	Geological
9-1-2R-R602.10.5	T-R602.10.5	Minimum Length of Braced Wall Panels	Sections (c), (d), (h)(52)	Geological
9-1-2R-R602.10.6.1	Figure R602.10.6.1	Method ABW	Sections (c), (d), (h)(53)	Geological

BMC Section	AMENDED CBSC Section	BMC Section Title	Justification from Section 2 of this Resolution	Findings/ Local Conditions
9-1-2R-R602.10.6.2	Figure R602.10.6.2	Method PFH	Sections (c), (d)	Geological
9-1-2R-R602.10.6.4	Figure R602.10.6.4	Method CS-PF	Sections (c), (d), (h)(54)	Geological
9-1-2R-R606.12.2.2.3	R606.12.2.2.3	Reinforcement Requirements for Masonry Elements	Sections, (c), (d), (e), (h)(55)	Geological
9-1-2R-R703.6	R703.6	Wood Shakes and Shingles	Sections (a), (b), (h)(56)	Climatic
9-1-2R-R703.6.1	R703.6	Wood Shakes and Shingles	Sections (a), (b), (h)(56)	Climatic
9-1-2R-R703.6.2	R703.6	Existing Wood Exterior Repairs	Sections (a), (b), (h)(56)	Climatic
9-1-2R-R803.2.4	R803.2	Openings in Horizontal Diaphragms	Sections (c), (d), (h)(57)	Geological
9-1-2R-R806.5	R806.5	Unvented Attic and Unvented Enclosed Rafter Assemblies	Sections (a), (b), (h)(58)	Climatic
9-1-2R-R902.2	R902.2	Fire-Retardant-Treated Shingles and Shakes	Sections (a), (b), (h)(59)	Climatic
9-1-2R-R905.7	R905.7	Wood Shingles	Sections (a), (b), (h)(60)	Climatic
9-1-2R-R905.8	R905.8	Wood Shakes	Sections (a), (b), (h)(61)	Climatic
9-1-2R-R908.4	R908.4	Roof Recover	Sections (a), (b), (h)(62)	Climatic
9-1-2R-R908.4.1	R908.4.1	Roof Recovering Over Wood Shingles or Shakes	Sections (a), (b), (h)(63)	Climatic
Amendments to the 2022 California Electrical Code (CBSC Part 3)				
9-1-3		Adoption of the 2025 California Electrical Code	-	Administrative
9-1-3-80.97	N/A	Electric Vehicle Charging Station Expedited Review Process	-	Administrative
9-1-3-80.99	N/A	Small Residential Rooftop Solar Energy System Review Process	-	Administrative

BMC Section	AMENDED CBSC Section	BMC Section Title	Justification from Section 2 of this Resolution	Findings/ Local Conditions
Amendments to the 2022 California Mechanical Code (CBSC Part 4)				
9-1-4		Adoption of the 2025 California Mechanical Code	-	Administrative
Amendments to the 2022 California Plumbing Code (CBSC Part 5)				
9-1-5		Adoption of the 2025 California Plumbing Code	-	Administrative
Amendments to the 2022 California Energy Code (CBSC Part 6)				
9-1-6		Adoption of the 2025 California Energy Code	-	Administrative
Amendments to the 2022 California Wildland-Urban Interface Code (CBSC Part 7)				
9-1-7		Adoption of the 2025 California Wildland-Urban Interface Code	-	Administrative
9-1-7-302.1.1		Establishment of the Burbank Fire Hazard Severity Zones	Sections (a), (b), (g)	Administrative/ Climatic
9-1-7-604.3.1		Fire Hazard Reduction in the Burbank Fire Hazard Severity Zones	Sections (a), (b), (f), (g), (h)(64)	Climatic/ Topographical
9-1-7-604.3.2		Enforcement	-	Administrative
Amendments to the 2022 California Historical Building Code (CBSC Part 8)				
9-1-8		Adoption of the 2025 California Historical Building Code	-	Administrative
Amendments to the 2022 California Fire Code (CBSC Part 9)				
9-1-9		Adoption of the 2025 California Fire Code	-	Administrative
9-1-9-104.6.1	104.6	Appeal to the Fire Code Official	-	Administrative

BMC Section	AMENDED CBSC Section	BMC Section Title	Justification from Section 2 of this Resolution	Findings/ Local Conditions
9-1-9-104.10.2	104.10	Investigations	-	Administrative
9-1-9-104.11.4	104.11	Fire Prevention Bureau Personnel and Police	-	Administrative
9-1-9-104.11.5	104.11	Cost of Emergency Response	-	Administrative
9-1-9-105.5.5.1	105.5.5	Parade Floats	-	Administrative
9-1-9-105.5.6.1	105.5.6	Cellulose Nitrate Storage	-	Administrative
9-1-9-105.6	105.6	Required Construction Permits	-	Administrative
9-1-9-105.6.26	105.6	Other	-	Administrative
9-1-9-108.2.1	108.2	Permit Fees	-	Administrative
9-1-9-108.2.1.1	108.2	Permit Fee Exemptions	-	Administrative
9-1-9-108.2.2	108.2	Inspection Fee	-	Administrative
9-1-9-108.2.3	108.2	Automatic Adjustment of Fees	-	Administrative
9-1-9-108.2.3.1	108.2	Exception: Action By Council	-	Administrative
9-1-9-108.2.4	108.2	Automatic Adjustment for Underground Tank Fees	-	Administrative
9-1-9-108.2.4.1	108.2	Annual Adjustment	-	Administrative
9-1-9-108.2.4.2	105.2.23	Exception: Action By Council	-	Administrative
9-1-9-108.4.1	108.4	Investigation Fees: Work Without a Permit	-	Administrative

BMC Section	AMENDED CBSC Section	BMC Section Title	Justification from Section 2 of this Resolution	Findings/ Local Conditions
9-1-9-109.2.3	109.2	Self-Inspection	-	Administrative
9-1-9-112.5	112	Board of Building and Fire Code Appeals	-	Administrative
9-1-9-113.4.2	113.4	Code Violation Inspection Fee	-	Administrative
9-1-9-115.1.3	115	Warning Signs	-	Administrative
9-1-9-202	202	Definitions	-	Administrative
9-1-9-304.1.2.1	304.1.2	Premises Maintenance	-	Administrative
9-1-9-307.1.1.1	307	Open Burning General	Sections (a), (b), (f), (g), (h)(65)	Climatic/ Topographical
9-1-9-307.1.1.2	307	Starlight Amphitheater - Open Flames and Burning Prohibited	Sections (a), (b), (f), (g), (h)(66)	Climatic/ Topographical
9-1-9-315.1.1	315.1	Corrective Actions	-	Administrative
9-1-9-401.3.3.1	401	Reporting Emergencies	-	Administrative
9-1-403.11.1(a)	403.11	Requirements for Public Safety	-	Administrative
9-1-9-503.1.2.1	503.1.2	High-Rise and Mid-Rise Buildings	Sections (a), (b), (g), (h)(67)	Climatic
9-1-9-503.2.1.1	503.1.2	Fire Apparatus Access Roads	Sections (a), (b), (g), (h)(68)	Climatic

BMC Section	AMENDED CBSC Section	BMC Section Title	Justification from Section 2 of this Resolution	Findings/ Local Conditions
9-1-9-505.1.1	505.1	Residential Building Identification	-	Administrative
9-1-9-505.1.2	505.1	Commercial Building Identification	-	Administrative
9-1-9-505.1.3	505.1	Premises Identification	-	Administrative
9-1-9-903.2(a)	903.2	Required Installations	Sections (a), (b), (g), (h)(69)	Climatic
9-1-9-903.2(b)	903.2	Special Provision for All Buildings	Sections (a), (b), (g), (h)(70)	Climatic
9-1-9-903.2.8(a)	903.2.8	Group R Occupancies	Sections (a), (b), (g), (h)(71)	Climatic
9-1-9-903.4.2.1	903.4.2	Sprinkler System Monitoring and Alarms	Sections (a), (b), (g), (h)(72)	Climatic
9-1-2-4804.2.1	4804.2	Studio and Stage Exit Perimeters	-	Administrative
9-1-9-5001.5.1(a)	5001.5.1	Unified Hazardous Waste and Materials Management Regulatory Program	-	Administrative
9-1-9-5003.3.1.5	5003.3.1	Hazardous Materials, Release Response Plan, Inventory	-	Administrative
9-1-9-5003.3.1.6	5003.3.1	Emergency Response Expenses	-	Administrative
9-1-9-5003.4.1	5003.4	Material Safety Data Sheets	-	Administrative

BMC Section	AMENDED CBSC Section	BMC Section Title	Justification from Section 2 of this Resolution	Findings/ Local Conditions
9-1-9-5608.1(a)	5608.1	Prohibition	Sections (a), (b), (f), (g), (h)(73)	Climatic/ Topographical/ Eviromental
Amendments to the 2022 California Existing Building Code (CBSC Part 10)				
9-1-10		Adoption of the 2025 California Existing Building Code	-	Administrative
9-1-16-A300		Adoption of Appendix A - Chapter A3 of the 2025 California Existing Building Code	Sections (c), (d)	Geological
Amendments to the 2022 California Green Building Standards Code (CBSC Part 11)				
9-1-11		Adoption of the 2025 California Green Building Code	-	Administrative
9-1-11-4.509	Chapter 4	Cool Roof for Reduction of Heat Island Effect	Sections (a), (b), (g), (h)(74)	Climatic/ Enviornmental
9-1-11-5.509	Chapter 5	Cool Roof for Reduction of Heat Island Effect	Sections (a), (b), (g), (h)(75)	Climatic/ Enviornmental
Amendments to the 2022 California Referenced Standards Code (CBSC Part 12)				
9-1-12		Adoption of the 2025 California Referenced Standards Code	-	Administrative

Chapter 4 of the WUI code provides further information regarding:

- Emergency Vehicle Access: Properties must have adequate identification and access for emergency vehicles, including fire apparatus access roads and water supply systems.
- Site Access: Properties must have key boxes to provide ready access to properties secured by gated roadways or other impediments to rapid fire services access.
- Site supplies: Properties must have fire protection water supplies, including adequate water sources, pumper apparatus drafting sites, fire hydrant systems and system reliability.
- Defensible Space: Establishing a defensible space around structures is crucial for reducing wildfire risk. This includes maintaining vegetation and creating barriers to slow or halt fire progress.
- Building Hardening: Using fire-resistant materials and construction methods can significantly enhance a structure's ability to withstand wildfires.

These guidelines are essential for communities located in wildfire-prone areas, providing a framework for reducing risks and enhancing safety in the wildland-urban interface.

Stairway Exterior Wall Protection: CBC 1023.7.2 is a new requirement that builds on the 180-degree rule for protection of stairway exterior walls. If an interior stairway extends above a low roof, the new code either requires one-hour protection of the stairway exterior wall for 10 ft above the roof surface or requires the roof to be one-hour rated with 45-minute rated openings within 10 ft of the stairway exterior wall. This requirement does not apply at the true high-roof condition where the stair penthouse is extending above the roof.

Horizontal Exit Communication Systems: CBC 1026.6 now requires two-way communication systems at elevator landing or within an area of refuge. They shall be installed on each side of a horizontal exit that does not have an elevator lobby with a two-way communication system.

Insulated Metal Panels: CBC 1409 is a new code section added in Chapter 14 that addresses requirements for insulated metal panels. The CBC Chapter 2 definition is: “A factory manufactured panel consisting of metal facings and an insulation core intended for use as a system forming an exterior wall, an exterior wall covering, a roof covering, or a roof assembly of a building.”

Podium Construction Updates: There are two changes to podium construction involving a three-hour horizontal assembly that separates two different types of construction (CBC 510.2):

- Group A occupancies with an occupant load > 300 are now allowed above the three-hour horizontal building separation.
- Vertical offsets of the three-hour horizontal building separation are to be constructed as fire barriers.

Exterior Wall Continuity: CBC Section 705 now requires that fire-resistance-rated exterior walls maintain their continuity when intersected by floor or roof assemblies. This change promotes safer construction practices that prevent unintentional fire paths at floor/roof intersections with rated walls, however, it will come with more rigorous fire-prevention detailing at these intersections, such as the use of firestop systems or the need to use fire-rated structural materials.

Floor Penetration Exceptions: There are two new exceptions for floor penetrations:

- CBC 714.5.1 Exception 4 now allows unprotected penetrations of concrete floors within parking garages (open or enclosed), when the areas above and below the penetrations are parking garage areas.
- CBC 714.5.1.2 Exception 4 now exempts the T-rating requirement where penetrations are protected with concrete, grout, and mortar and aligns the code for situations where the F-rating was exempted by CBC 714.5.1 for the same protection method at floor penetrations.

Plumbing Code Required Fixtures: CPC 422.1.1 provides clarification on all-gender multi-user restroom fixtures calculations.

Key Changes in the 2025 Energy Code

- Energy requirements for single-family units have been expanded upon.
- Added window requirements to align with the Wildland-Urban Interface requirements of Part 7 of the California Building Code.
- Single-Family gas or propane heating, HVAC and/or water heaters, have been removed as an option from the Prescriptive Approach, meaning that a Performance Approach must be used for gas or propane HVAC and/or water heaters.
- In non-residential building with occupancy groups A (Assembly), B (Business), E (Educational), I (Institutional), and M (Mercantile), public entrances to new buildings are now required to include an enclosed vestibule between the outdoors and interior spaces.
- New commercial kitchen adds the following mandatory electric readiness requirements:

- Quick-service and institutional commercial kitchens must include a dedicated branch circuit wiring and outlet that would be accessibly to cookline appliances and that meets the following requirements:
    - The branch circuit conductor must be rated at 50 amps minimum.
    - The electric service panel must have a minimum capacity of 800 connected amps.
- The electrical service panel must be sized to have an additional 208 volt or 240 volt 50-amp breaker.
- Healthcare facilities and all-electric commercial kitchens are exempt from these requirements.