BURBANK UNIFIED SCHOOL DISTRICT
BOARD OF EDUCATION
REGULAR MEETING

Thursday, June 25, 2026

Closed Session 5:00 p.m.
Open Session 6:30 p.m.

Burbank Unified School District
Third Floor - Board Room
1900 W. Olive Avenue
Burbank, California

AGENDA

The entire agenda packet is available for review online at www.burbankusd.org/boemeetings; at the District Office Building, Superintendent's Office, 1900 W. Olive Ave., Burbank, 91506; and at the Reference Desk in all Burbank City Libraries at: 110 N. Glenoaks, Burbank, 91502; 300 N. Buena Vista, Burbank, 91505; and 3323 W. Victory Blvd., Burbank, 91505.

1. CALL TO ORDER

1.a NOTICE TO THE PUBLIC
The District is providing alternatives to in-person attendance for viewing and participating. Any individual or group representative may address the Board of Education on any agenda item or subject within its jurisdiction during one of the three Public Comments sections.

Instructions for Virtual Public Speakers Who Wish to Address the Board:

1. Speakers who wish to provide a Public Comment virtually should sign up at this link: https://forms.gle/XrYpZ7M2hMb1LJCS7 3pm on Wednesday, June 24th. Please indicate if your comment pertains to (1) an item on this agenda, or (2) a subject within the jurisdiction of the Board of Education. Closed Session Public Comments must be given in person.

2. The Zoom Webinar will open at 5:30 p.m. Speakers are asked to rename their Zoom profile to indicate their full name to expedite this process. Please note that only those individuals who have signed up to speak prior to 3:00 p.m. on the day before, will be allowed to enter the Zoom Webinar. Speakers will receive an email Wednesday afternoon with the Zoom Webinar login details.

3. When it is time for a speaker to address the Board, the speakerâ€™s name will be called and the speaker should activate their microphone and camera. Speakers must be present in the Zoom Webinar when their name is called in order to address the Board. Speakers are also requested to state their name (and their pronouns, if desired) prior to addressing the Board. Please note that the chat function will be disabled.

4. After a speaker completes their public comment, or if the five-minute (5) time limit has been reached, the speaker will be removed from the Zoom Webinar and can continue watching the meeting by streaming it at www.burbankusd.org/boemeetings

5. If you would like to make a Public Comment and require Armenian, Spanish, or ASL translation, please email stephaniebeauregard@burbankusd.org prior to 3:00 p.m. the day before the meeting to receive a registration link.

2. REQUESTS TO ADDRESS THE BOARD

2.a Public Communications on Closed Session Agenda Items (In-Person Only)
An individual or group representative may address the Board of Education on any Closed Session agenda item by completing a request card. Speakers are requested to state their name prior to speaking to the Board. Not more than five (5) minutes may be allotted to each speaker, except by unanimous consent of the Board of Education. Following public comment the Board can direct the Superintendent and staff to meet with members of the public to better understand their concerns or points of view.

3. CLOSED SESSION
The Board will meet in Closed Session for the purpose of the following:

3.a Public Employee Discipline/Dismissal/Release Pursuant to Government Code 54957

3.b Conference with Legal Counsel - Existing Litigation Pursuant to Government Code Â§54956.9 (b)(1) and (b)(3)(A)
Final Settlement Agreement for Special Education Students 960027543, 960032802 and 960035252.

3.c Action on Student Expulsion
The Board of Education will take action in closed session pursuant to Education Code Section 48700.7, 48900(b), 48900(c), and 48900(h) and on the expulsion recommendation by the Administrative Hearing Panel for Student #960045447, as presented.

3.d Action on Student Expulsion
The Board of Education will take action in closed session pursuant to Education Code Section 48915(a)(1)(A), 48900(a)(1), & 48900 (a)(2) on the expulsion recommendation by the Administrative Hearing Panel for Student 960043826, as presented.

3.e Conference with Legal Counsel Anticipated Litigation
Significant Exposure to Litigation Pursuant to Paragraph (2) of Subdivision (d) of Section 54956.9., 2 potential case.

3.f Conference with Labor Negotiator, Pursuant to Government Code Â§54957.6
Agency Negotiator: Jason Hasty
Employee Organization: California School Employees Association (CSEA) Chapter 674

3.g Conference with Labor Negotiator, Pursuant to Government Code Â§54957.6
Agency Negotiator: Jason Hasty
Employee Organization: Burbank Teachers Association (BTA)

4. RECONVENE IN PUBLIC SESSION/PLEDGE OF ALLEGIANCE/LAND

ACKNOWLEDGEMENT
When the Board of Education reconvenes in Public Session, the Board may make any required disclosures regarding actions taken in Closed Session or adopt any appropriate resolutions concerning these matters.

â€œWe acknowledge the traditional, ancestral, unceded territory of the Chumash, Tongva, FernandeÃ±o Tataviam, and First Nations on which we are learning, educating, and living.â€

5. REPORTING ON CLOSED SESSION

6. ADJUSTMENTS TO THE AGENDA
The Board President will announce any requests for adjustments to the meeting agenda.

7. ITEMS FOR FUTURE AGENDAS

8. PRESENTATIONS / RECOGNITIONS

9. REPORTS FROM THE BOARD AND STAFF

9.a Burbank Teacher's Association (BTA), California School Employees Association (CSEA), Burbank Association of School Administrators (BASA)
Sarah Schwartz; BTA President, Laura Bauman, CSEA President, and BASA President will report on association business.

9.b Reports from the Superintendent
Oscar Macias, Interim Superintendent, will report on items of interest to the Board of Education and the community.

10. REQUESTS TO ADDRESS THE BOARD

10.a Public Communications on Agenda Items
An individual or group representative may address the Board of Education on any agenda item by completing a request card. Speakers are requested to state their name prior to speaking to the Board. Not more than five (5) minutes may be allotted to each speaker, except by unanimous consent of the Board of Education. Following public comment the Board can direct the Superintendent and staff to meet with members of the public to better understand their concerns or points of view.

11. REPORTS TO THE BOARD

11.a Sobel Investigation - Executive Summary
Sobel Board Letter 062526.pdf
Sobel Executive Summary of Investigation and Key Findings 062526.pdf

11.b Report on Excess Reserves
Jason Hasty, Assistant Superintendent of Business Services, will report on the Ending Fund Balance in Excess of reserve for economic uncertainties (REU), as presented.
Report on Excess Reserves.pdf

12. NEW AND/OR UNFINISHED BUSINESS

12.a Resolution 56 Good Governance Commitments
Board Resolution 56 Good Governance 062526.pdf

12.b Acceptance of the 2024-2025 Measure S Annual Report from the School Facilities Oversight Committee
Jason Hasty, Assistant Superintendent of Business Services, recommends that the Board of Education accept the 2024-25 Measure S Annual Report as submitted by the School Facilities Oversight Committee, as presented.
Acceptance of SFOC Annual Report 2024-25 Measure S 062526.pdf

12.c Acceptance of the 2024-2025 Measure ABC Annual Report from the School Facilities Oversight Committee
Jason Hasty, Assistant Superintendent of Business Services, recommends that the Board of Education accept the 2024-25 Measure ABC Annual Report as submitted by the School Facilities Oversight Committee, as presented.
Acceptance of SFOC Annual Report 2024-25 062526.pdf

12.d Approval of Minutes
Minutes 5-21-26 UNOFFICIAL AM Amended.pdf

12.e Adoption of Resolution 57 - Approving the Update Fiscal Stabilization Plan and Implementation Timeline for Fiscal Years 2026-2027 Through 2028-2029
Jason Hasty, Assistant Superintendent of Business Services, recommends that the Board of Education adopt Resolution 57 approving the updated Fiscal Stabilization Plan and implementation timeline for fiscal years 2026-2027 through 2028-2029, as presented.
Resolution 57 - Fiscal Stabilization 062526.pdf

12.f Adoption of Resolution 58 Authorizing Temporary Transfers from the School Pools Fund Maintained by the Los Angeles County Treasurer 2026-2027
Jason Hasty, Assistant Superintendent, Administrative Services, recommends that the Board of Education adopt Resolution 58 Authorizing Temporary Transfers from the School Pools Fund Maintained by the Los Angeles County Treasurer 2026-2027 as permitted in Article XVI, Section 6, of the California Constitution, as presented.
Adoption of Resolution 58 Authorizing Temporary Transfers from the School Pools Fund 2026-2027.pdf

12.g Adoption of Resolution 59 Authorizing Temporary Interfund Cash Borrowing 2026-2027
Jason Hasty, Assistant Superintendent, Administrative Services, recommends that the Board of Education adopt Resolution 59 Authorizing Temporary Inter-Fund Cash Borrowing transfers up to 75% of the fund balances of the District for the 2026-2027 payment obligations as permitted in Education Code 42603, as presented.
Adoption of Resolution 59 Authorizing Temporary Inter-Fund Cash Borrowing 2026-2027.pdf

12.h Adoption of Resolution 60 Authorizing 2026-2027 Interfund Transfers Between Funds
Jason Hasty, Assistant Superintendent, Business Services, recommends that the Board of Education adopt Resolution 60 - Authorizing 2026-2027 Interfund Transfers Between Funds, as presented.
Authorization for Interfund Transfers for 2026-27.pdf

12.i Adoption of Resolution 61 Regarding the Delegation of Administrative Authority To Process

Routine Budget Revisions, Adjustments and Transfers
Jason Hasty, Assistant Superintendent, Business Services recommends that the Board of Education adopt Resolution 61 regarding the Delegation of Administrative Authority To Process Routine Budget Revisions, Adjustments and Transfers, as presented.
Delegation of Administrative Authority to Process Routine Budget Revisions, Adjustments and Transfers 1 (1).pdf

12.j Approval of Professional Services Agreement with Mollenhauer Group for Topographic Survey and GPR Utility Detection Services for the Pool Storage Building and Shade Structure at Burbank High School (Measure ABC Bond Fund)
Jason Hasty, Assistant Superintendent of Business Services, recommends that the Board of Education approve the proposal from Mollenhauer Group for topographic survey and GPR utility detection services for the Pool Storage Building and Shade Structure at Burbank High School, not to exceed $8,500.00 (Measure ABC Bond Funds), and that authority to sign the agreement be exercised pursuant to BUSD AR 3314, as presented.
Mollenhauer BHS.pdf

12.k Approval of Contract, SVA Architects, Design Services, Secure Entry, ADA, and Play Equipment Project, Emerson Elementary School (Measure ABC Bond Fund)
Jason Hasty, Assistant Superintendent of Business Services, recommends that the Board of Education approve the proposal from SVA Architects for design and construction administration services for the Secure Entry, ADA, and Play Equipment Project at Ralph Emerson Elementary School, not to exceed $598,800 (Measure ABC Bond Funds), and that authority to sign the agreement be exercised pursuant to BUSD AR 3314, as presented.
Design Services Emerson.pdf

12.l Approval of Variable Waiver Request- Certificated Staff
Human Resources Services, recommends that the Board of Education approve the Variable Waiver Request for Certificated Staff for school year 2026-2027, as presented.
Approval of Variable Waiver Request- Certificated Staff.pdf

12.mRatification of Tentative Agreement between the Burbank Unified School District (BUSD) and Burbank Teacherâ€™s Association (BTA) regarding Salary Schedule F Miscellaneous Salary Rates in Accordance with AB1200 (Chapter 1213/Statutes 1991), AB 2756 (Chapter 54/Statutes 2004), GC 3547.5
Jason Hasty, Assistant Superintendent of Business Services, recommends that the Board of Education ratify the Tentative Agreement between the Burbank Unified School District (BUSD) and Burbank Teacherâ€™s Association (BTA) regarding Salary Schedule F Miscellaneous Salary Rates, effective June 1, 2026, as presented.
Ratification of Tentative Agreement between the Burbank Unified School District and the Burbank Teacher's Association regarding Exhibit F.pdf

12.n Ratification of Tentative Agreement between the Burbank Unified School District (BUSD) and the California School Employees Association (CSEA), Chapter 674, reallocations and salary changes, in Accordance with AB 1200 (Chapter1213/Statutes 1991), AB2756 (Chapter 52/Statutes 2004), GC 3547.5
Human Resource Services, recommends that the Board of Education ratify Tentative Agreement between the Burbank Unified School District (BUSD) and the California School Employees Association (CSEA), Chapter 674, reallocations and salary changes, effective June 1, 2026, as presented.

Ratification of Tentative Agreement between the Burbank Unified School District (BUSD) and the California School Employees Association (CSEA), Chapter 674, reallocations and salary changes.pdf

12.o Second Reading of the 2026-2027 Burbank Unified School District Local Control Funding Formula (LCFF) and Local Control and Accountability Plan (LCAP)
Peter Knapik, Assistant Superintendent, Educational Services, and Robyn Anders, Director of Instructional Technology & Accountability, will facilitate the second reading of the proposed 2026-2027 Burbank Unified School District Local Control Funding Formula (LCFF) and Local Control and Accountability Plan (LCAP) and recommends that the Board of Education approve the 2026-2027 Burbank Unified School District Local Control Funding Formula (LCFF) and Local Control and Accountability Plan (LCAP), as presented.
LCAP Second Reading 6 25 26.pdf

12.p Approval of Status of Local Indicators
Peter Knapik, Assistant Superintendent of Education Services and Robyn Anders, Director of Instructional Technology and Accountability, Instructional Services, recommends that the Board of Education approve the Status of All Local Indicators as Met, as presented.
Local Indicators BoE Presentation 6 25 26.pdf

12.q Approval of Title I Schoolwide Program (SWP) Status for Ralph Emerson Elementary School
Peter Knapik, Assistant Superintendent of Educational Services, and Robyn Anders, Director of Instructional Technology & Accountability, recommend that the Board of Education approve the designation of Ralph Emerson Elementary School as a Title I Schoolwide Program (SWP) school and approve the associated Schoolwide Plan, effective 2026-2027, as presented.
Approval of Ralph Emerson Elementary School as TItle I Schoolwide Program (SWP).pdf

12.r Approval of the 2026-2027 Consolidated Application for Categorical Programs
Peter Knapik, Assistant Superintendent of Educational Services, recommends that the Board of Education approve the submission of the 2026-2027 Consolidated Application for Funding Categorical Programs, June Submission, and that authority to sign and submit the application to the California Department of Education be exercised pursuant to BUSD AR 3314, as presented.
Consolidated Application Approval for 2026-2027.pdf

12.s Approval of Federal Addendum Annual Revision for 2025-2026
Peter Knapik, Assistant Superintendent of Educational Services, recommends that the Board of Education approve the revised Federal Addendum for 2025-2026, as presented.
Federal Addendum Annual Revision 6 25 26.pdf

12.t Approval of Agreement with Family Service Agency of Burbank to Provide School-Based Counseling Services in 2026-2027
Peter Knapik, Assistant Superintendent of Educational Services, recommends that the Board of Education approve the agreement between the Burbank Unified School District and the Family Service Agency of Burbank, to provide individual and group counseling to elementary and secondary school pupils, as required, effective July 1, 2026 through June 30, 2027, not to exceed $164,500
(010-01500.0-71500-31100-5810-7422000) LCAP supplemental funds, and that the authority

to sign the agreement be exercised pursuant to BUSD -AR 3314, as presented.
FSA_School_Based_Counseling_6 25 26.pdf

12.u Adoption of AP Language Textbook (Lottery Textbook Fund)
Peter Knapik, Assistant Superintendent of Educational Services and Robyn Anders, Director of Instructional Technology, recommends the Board of Education adopt the Bedford Freeman & Worth AP Language of Composition Textbooks. Not to exceed $61,000 (01.0-63000-0-11100-10000-4110-742-9000 Lottery Textbook Funds), as presented.
AP_Lang 6 25 26.pdf

12.v Approval of Consulting Services Agreement with District Advocates Group, a Division of Urban Futures, Inc., for Facilities and Bond Program Consulting Services
Jason Hasty, Assistant Superintendent of Business Services, recommends that the Board of Education approve the Consulting Services Agreement with District Advocates Group, a Division of Urban Futures, Inc., for facilities and bond program consulting services, for a total annual not to exceed amount of $492,000. Over the initial three-year term, the total not to exceed amount is $1,476,000, funded from Measure ABC Bond Funds, and authorize the Superintendent or designee to execute the agreement pursuant to BUSD-AR 3314, as presented.
DAG Facilities Bond Consulting 062526.pdf

12.w Approval of Job Description for Athletic Trainer
Human Resources Services recommends that the Board of Education approve the Job Description for Athletic Trainer, effective June 26, 2026, as presented.
Approval of Job Description for Athletic Trainer.pdf

12.x Approval of Job Description for Communications and Multimedia Specialist II
Human Resources Services recommends that the Board of Education approve the Job Description for Communications & Multimedia Specialist II, effective June 26, 2026, as presented.
Approval of Job Description for Communications and Multimedia Specialist II.pdf

12.y Approval of Job Description for Position Control Analyst (CSEA)
Human Resources Services recommends that the Board of Education approve the Job Description for Position Control Analyst (CSEA), effective June 26, 2026, as presented.
Approval of Job Description for Position Control Analyst (CSEA).pdf

12.z Approval of New Classified Management Position- Director of Bond Projects
Jason Hasty, Assistant Superintendent of Business Services, recommends that the Board of Education approve the establishment of the Director of Bond Projects position, a Classified Management position on Salary Schedule B, Range AA, funded by Measure ABC to support successful implementation of the Districtâ€™s bond program, effective July 1, 2026, as presented.
Approval of New Classified Management Position-Director of Bond Projects.pdf

12.aa Approval of Job Description for Assistant Superintendent of Special Education and Student Support Services
Human Resources Services recommends that the Board of Education approve the Job Description for Assistant Superintendent of Special Education and Student Support Services, effective June 26, 2026, as presented.

Approval of Job Description for Assistant Superintendent of Special Education and Student Support Services.pdf

12.ab Adoption of 2026-2027 Budget

Jason Hasty Assistant Superintendent of Business Services recommends that the Board of Education adopt the 2026-2027 budget, as presented.

Adoption of the 2026-2027 Budget.pdf

12.ac Approval of Professional Services Agreement with Ryland Strategic Business Consulting for Payroll and Business Services Support

Jason Hasty, Assistant Superintendent of Business Services, recommends that the Board of Education approve the Professional Services Agreement between Burbank Unified School District and Ryland Strategic Business Consulting for payroll and business services support for the period ending June 30, 2027, not to exceed $50,000 (General Fund), and authorize the Superintendent or designee to execute the agreement pursuant to BUSD-AR 3314, as presented.

Approval Ryland Agreement_Payroll Support 062526.pdf

13. CONSENT AGENDA

All items on the Consent Agenda are considered by the Superintendent to be of a routine nature and are acted on with one motion. Any recommendation may be removed from the Consent Agenda at the request of any Board member and acted on separately.

13.a Approval of Minutes

Minutes_6.4.26_UNOFFICIAL_AM.pdf

13.b Approval of Minutes

Minutes 5.7.26 UNOFFICIAL AM Amended.pdf

13.c Approval of the 2025-2026 Purchase Order Report

Administrative Services recommends that the Board of Education approve purchase orders for 2025-2026 as listed through June 1, 2026, as presented.

2025-2026 PURCHASE ORDER REPORT.pdf

13.d Approval of Personnel Report Number 25-26-22

Human Resources Services, recommends that the Board of Education approve Personnel Report number 25-26-22, covering Certificated and Classified personnel, and consisting of Pages 1 to 16 inclusive, as presented.

Personnel Report 062526.pdf

13.e Warrants Report - May 1, 2026 through May 31, 2026

For informational purposes, Administrative Services submits to the Board of Education the Warrants Report in the total amount of $7,863,396.45, for warrants issued May 1, 2026 through May 31, 2026, as presented.

Warrants Report - May 2026.pdf

13.f Miscellaneous Receipts Report - May 1, 2026 - May 31, 2026

For informational purposes, Administrative Services submits to the Board of Education the Miscellaneous Receipts Report in the total amount of $1,827,902.79, for receipts from May 1, 2026 through May 31, 2026, as presented.

Miscellaneous Receipts Report - May 2026.pdf

13.g Approval of Instructional Consultant Services
Peter Knapik, Assistant Superintendent of Educational Services, recommends that the Board of Education approve the instructional consultant services for on-site student learning support and staff development and exercise authority to sign the agreements pursuant to BUSD-AR 3314, as presented.
Approval of Instructional Consultants_Redacted 6 25 26.pdf

13.h Approval of Final Settlement Agreement (Special Education)
Peter Knapik, Assistant Superintendent of Educational Services, recommends that the Board of Education approve Final Settlement Agreement for Special Education student 960027543, at no cost to the district, June 26, 2026 through August 30, 2026, and that authority to sign the agreement be exercised pursuant to BUSD-AR 3314, as presented.
SPED Student 960027543 Settlement Agreement.pdf

13.i Approval of Final Settlement Agreement (Special Education)
Peter Knapik, Assistant Superintendent of Educational Services, recommends that the Board of Education approve Final Settlement Agreement for Special Education student 960032802, total not to exceed $15,880, (01.0-65000.0-50010-36000-5813-7440000), June 1, 2024 through December 31, 2027 and that authority to sign the agreement be exercised pursuant to BUSD-AR 3314, as presented.
SPED Student 960032802 Settlement Agreement.pdf

13.j Approval of Final Settlement Agreement (Special Education)
Peter Knapik, Assistant Superintendent of Educational Services, recommends that the Board of Education approve Final Settlement Agreement for Special Education student 960035252, total not to exceed $7,250, (01.0-65000.0-50010-36000-5813-7440000), 2025-2026 school year through May 1, 2028 and that authority to sign the agreement be exercised pursuant to BUSD-AR 3314, as presented.
SPED Student 960035252 Settlement Agreement.pdf

13.k Approval of Agreement for Professional Services Provided by Burbank Optometric Center, Inc. for Special Education Students
Peter Knapik, Assistant Superintendent of Educational Services, recommends that the Board of Education approve an agreement between the Burbank Unified School District and Burbank Optometric Center, Inc., to provide compensatory education, not to exceed $5,500 (01.0-65000.0-57602-11900-5850-744000) for Special Education student 960027543, effective June 26, 2026 through August 30, 2026, and that authority to sign the agreement be exercised pursuant to BUSD-AR 3314, as presented.
SPED Student 960027543 Burbank Optometric Center, Inc..pdf

13.l Approval of Agreement for Professional Services Provided by Karen Lynn Epport, Ph.D. (Special Education)
Peter Knapik, Assistant Superintendent of Educational Services, recommends that the Board of Education approve an agreement between the Burbank Unified School District and Karen Lynn Epport, Ph.D., to provide a psychoeducational and speech and language IEE, not to exceed $10,000 (01.0-65000.0-57602-11901-5850-744000) for Special Education student 960032256, effective June 26, 2026 through December 30, 2026, and that authority to sign the agreement be exercised pursuant to BUSD-AR 3314, as presented.
SPED Student 960032256 Karen Epport, Ph.D..pdf

13.m Approval of Agreement for Professional Services Provided by First Student, Inc. for Special Education Students

Peter Knapik, Assistant Superintendent of Educational Services, recommends that the Board of Education approve an agreement between the Burbank Unified School District and First Student, Inc., to provide transportation services for Special Education students, for a total not to exceed of $4,600,000 (01.0-07240.0-50010-36000-5812-7440000), effective July 1, 2026 through June 30, 2027, and that authority to sign the agreement be exercised pursuant to BUSD-AR 3314, as presented.

SPED Professional Services First Student_Transportation.pdf

13.n Approval of Agreement for Professional Services Provided by LRA Interpreters, Inc. (Special Education)

Peter Knapik, Assistant Superintendent of Educational Services, recommends that the Board of Education approve an agreement between the Burbank Unified School District and LRA Interpreters, Inc., to provide interpreting and translation services for Special Education students, not to exceed $200,000 (01.0-65000.0-57602-11901-5850-7440000), effective July 1, 2026 through June 30, 2027, and that authority to sign the agreement be exercised pursuant to BUSD-AR 3314, as presented.

SPED Professional Services LRA Interpreters.pdf

13.o Approval of Amended Agreement for Professional Services Provided by MYBASEPAY USA LLC for Special Education Students

Peter Knapik, Assistant Superintendent of Educational Services, recommends that the Board of Education amend an agreement between Burbank Unified School District and MYBASEPAY USA LLC to provide a credentialed special education teacher, not to exceed $163,208.50 (01.0-65000.0-57601-11804-5810-7440000), effective August 8, 2025 through June 30, 2026 and that authority to sign the agreement be exercised pursuant to BUSD-AR 3314, as presented.

Note: The original approval date was July 24, 2025 for a total not to exceed $136,622.50. Due to an increase in teacher caseload, there is an increase in the total number of hours from 7 hours per day to 8 hours per day for 82 days. The second amendment added an additional $8,651.00 for a new not to exceed amount of $145,273.50. Due to the increase in caseload there was also an increase in IEPs to be completed so the end date has been extended from May 29, 2026 to June 30, 2026 which adds an additional $17,935 for a total not to exceed amount of $163,208.50.

SPED Professional Services MyBasePay USA LLC_Amendment.pdf

13.p Approval of Agreement for Professional Services Provided by RCM Healthcare Services (Special Education)

Peter Knapik, Assistant Superintendent of Educational Services, recommends that the Board of Education approve an agreement between the Burbank Unified School District and RCM Healthcare Services, to provide occupational therapy services for Burbank Special Education students, not to exceed $159,528 (01.0-65000.0-57602-11900-5850-7440000), effective July 1, 2026 through May 28, 2027, and that authority to sign the agreement be exercised pursuant to BUSD-AR 3314, as presented.

SPED Professional Services RCM Healthcare Services.pdf

13.q Approval of Agreement for Professional Services Provided by Gary D Stromberg & Associates, LLC for Special Education

Peter Knapik, Assistant Superintendent of Educational Services, recommends that the Board of Education approve an agreement between Burbank Unified School District and Gary D Stromberg & Associates, LLC, to provide a speech and language pathologist, not to exceed $140,624 (01.0-65000.0-57602-11901-5850-7440000), effective August 10, 2026 through June 4, 2027, and that authority to sign the agreement be exercised pursuant to BUSD-AR 3314, as presented.
SPED Professional Services Gary D Stromberg & Associates.pdf

13.r Approval of Amended Agreement for Professional Services Provided by Tiny Hands Therapy Inc. for Special Education
Peter Knapik, Assistant Superintendent of Educational Services, recommends that the Board of Education amend an agreement between the Burbank Unified School District and Tiny Hands Therapy, LLC to provide occupational therapy to Special Education students, not to exceed $197,180 (01.0-65000.0-57602-11900-5850-7440000), effective August 4, 2025 through June 5, 2026, and that authority to sign the agreement be exercised pursuant to BUSD-AR 3314, as presented.

Note: The original approval date was September 4, 2025 for a total not to exceed $96,900. The District extended the agreement through May 22, 2026 for an additional $92,000 for a total of $188,900. Due to an increased need for occupational therapy during the first 9 days of ESY, this amendment adds an additional $8,280 for a total not to exceed amount of $197,180.
SPED Professional Services Tiny Hands Therapy_Amendment.pdf

13.s Approval of Agreement for Professional Services Provided by West Shield Adolescent Services for Special Education Students
Peter Knapik, Assistant Superintendent of Educational Services, recommends that the Board of Education approve an agreement between the Burbank Unified School District and West Shield Adolescent Services, to escort and transport Special Education students to out of or in state residential facilities, not to exceed $10,000 (01.0-07240.0-50010-36000-5812-7440000), effective July 1, 2026 through June 30, 2027, and that authority to sign the agreement be exercised pursuant to BUSD-AR 3314, as presented.
SPED Professional Services West Shield.pdf

13.t Approval of Agreement for Professional Services Provided by Window (Joinwindow Dot Com Inc.) for Special Education
Peter Knapik, Assistant Superintendent of Educational Services, recommends that the Board of Education approve an agreement between Burbank Unified School District and Window (Joinwindow Dot Com Inc.) , to provide a speech and language pathologist, not to exceed $179,520 (01.0-65000.0-57602-11901-5850-7440000), effective August 10, 2026 through June 4, 2027, and that authority to sign the agreement be exercised pursuant to BUSD-AR 3314, as presented.
SPED Professional Services Window.pdf

13.u Approval of Master Contract Renewal for Nonpublic, Nonsectarian Schools and Agencies
Peter Knapik, Assistant Superintendent of Educational Services, recommends that the Board of Education approve the Master Contracts and service agreements for Special Education students, to be provided by the indicated nonpublic, nonsectarian schools and agencies as follows:

Non-Public Schools:
School Year 2025 - 2026 (as of 6/9/2026) = $2,690,578
School Year (projection) 2026 - 2027 = $4,000,000

Non-Public Agency:
School Year 2025 - 2026 (as of 6/9/2026) = $7,559,143
School Year (projection) 2026 - 2027 = $5,500,000

Effective July 1, 2026 through June 30, 2027, and that authority to sign the contracts be exercised pursuant to BUSD-AR 3314, as presented.
SPED Master Contract for Nonpublic, Nonsectarian Schools and Agencies.pdf

13.v Amendment and Ratification of Agreement between Burbank Adult School and Telemedcore
Peter Knapik, Assistant Superintendent of Educational Services recommends that the Board of Education amend and ratify the agreement between Burbank Adult School and Telemedcore to be effective on June 15, 2026, not to exceed $58,012.50 (11.0-63910.0-41104-10000-5840-5330000) and the authority to sign the Agreement be exercised pursuant to BUSD AR 3314 as presented.
BAS - Telemedcore Agreement 6 25 26.pdf

13.w Approval of Agreement between Burbank Adult School and iHeartMEDIA
Peter Knapik, Assistant Superintendent of Educational Services, recommends that the Board of Education approve the agreement between the Burbank Unified School District, Burbank Adult School and iHeartMedia to be effective from July 29, 2026 through May 31, 2027, not to exceed $35,200. (23% each = 11.0-63910.0-41101-27000-5850-5330000, 11.0-63910.0-41102-27000-5850-5330000, 11.0-63910.0-41104-27000-5850-5330000, 11.0-63910.0-41106-27000-5850-5330000 and 8% = 11.0-00639.0-41100-27000-5850-5330000) and that the authority to sign the Agreement be exercised pursuant to BUSD AR 3314, as presented.
Agreement BAS iHeartMEDIA 6-25-2026.pdf

13.x Approval of School Site and Department Software Licenses and Memberships for 2026 - 2027
Jason Hasty, Assistant Superintendent of Business Services, recommends that the Board of Education approve the District Software Licenses and Memberships for the 2026 - 2027 school year, as presented.
Approval_School Site and Department Software Licenses and Memberships for 2026 - 2027_062526.pdf

13.y Approval of Renewal of Agreement with Lumen Technologies for VoIP SIP Trunk Services, District-wide (General Fund)
Jason Hasty, Assistant Superintendent of Business Services, recommends that the Board of Education approve the renewal agreement between Burbank Unified School District and Lumen Technologies for VoIP SIP Trunk services, for a three-year contract, not to exceed $39,000, with an annual fee of approximately $13,000 (01.0-00000.0-00000-72000-5910-7400000) General Fund, effective July 1, 2026 through June 30, 2029, and that authority to sign the agreement be exercised pursuant to BUSD AR 3314, as presented.
Approval_Renewal Agreement_Lumen VoIP_062526.pdf

13.z Approval of Renewal of Agreement with Arey Jones for Lightspeed Alert and Lightspeed Content Filtering Licenses (General Fund and Safety Credits)

Jason Hasty, Assistant Superintendent of Business Services, recommends that the Board of Education approve the renewal of agreement between Burbank Unified School District and Arey Jones for Lightspeed Alert and Lightspeed Content Filtering Licenses, not to exceed $145,020.00 (01.0-00000.0-00000-72000-5840-7400000) General Fund and Safety Credits, amount to be determined, effective July 1, 2026 through June 30, 2029, and that authority to sign the agreement be exercised pursuant to BUSDâ€"AR 3314, as presented.
Approval_Renewal Agreement_Arey Jones Lightspeed_062526.pdf

13.aa Approval of Contracts with American Outdoor Education, Emerald Cove Outdoor Science Institute, High Trails Outdoor Science School and Los Angeles County Outdoor Science School.
Peter Knapik, Assistant Superintendent, Educational Services, recommends that the Board of Education approve the contract with American Outdoor Education, Emerald Cove Outdoor Science Institute, High Trails Outdoor Science School and Los Angeles County Outdoor Science School, effective July 1, 2026, through June 30, 2027, and that authority to sign the agreement be exercised pursuant to BUSD-AR 3314, as presented.
OSS Contracts 26-27-Nine Elementary Schools.pdf

13.ab Approval of Agreement between Burbank Unified School District (Burbank Adult School) and AABC TV
Peter Knapik, Assistant Superintendent of Educational Services, recommends that the Board of Education approve the advertising campaign between Burbank Unified School District and AABC TV to promote the adult education programs in the Armenian community, effective July 1, 2026, not to exceed $25,500.00 for three months (25% each = 11.0-63910.0-41101-27000-5850-5330000, 11.0-63910.0-41102-27000-5850-5330000, 11.0-63910.0-41104-27000-5850-5330000, 11.0-63910.0-41106-27000-5850-5330000) and the authority to sign the Agreement be exercised pursuant to BUSD â€“ AR 3314, as presented.
AABC TV- BUSD-BAS Ad Agreement 6 25 26.pdf

13.ac Approval of District Memberships 2026-2027
Jason Hasty, Assistant Superintendent of Business Services, recommends that the Board of Education approve the memberships in professional organizations for the 2026-2027, as presented.
District Memberships 2026-27.pdf

13.ad Approval of Agreement for Professional Services, OPEB Actuarial Services (General Fund)
Jason Hasty, Assistant Superintendent of Business Services, recommends that the Board of Education approve the agreement between Burbank Unified School District and Schwab Actuarial Services to provide OPEB actuarial services, in an amount not to exceed $9,375 (01.0-00000.0-00000-72000-5820-7401000, General Fund), effective June 26, 2026, through completion of services, and that authority to sign the agreement be exercised pursuant to BUSD AR 3314, as presented.
Actuarial Services 062526.pdf

13.ae Approval of Renewal Agreement with EMS LINQ, LLC for LINQ Nutrition Products and Service (Cafeteria Fund)
Jason Hasty, Assistant Superintendent of Business Services, recommends that the Board of Education approve the renewal agreement between Burbank Unified School District and EMS LINQ, LLC for LINQ Nutrition products and services for the period of August 1, 2026 through July 31, 2027, not to exceed $38,360.00 (13.0-53100.0-00000-37000-5840-7490000,

Cafeteria Fund), and that authority to sign the agreement be exercised pursuant to BUSD AR 3314, as presented.
EMS Linq 2026-27 062526.pdf

13.af Approval of Agreement for Use of Equipment and Related Equipment Purchases with Oliver Packaging and Equipment Company (Cafeteria Fund)
Jason Hasty, Assistant Superintendent of Business Services, recommends that the Board of Education approve the Agreement for Use of Equipment between Burbank Unified School District and Oliver Packaging and Equipment Company and approve the related equipment purchases, effective June 26, 2026, not to exceed $52,000, (13.0 53100.0 00000 37000 4410 7490000 - $12,500, and 13.0 53100.0 00000 37000 6410 7490000 - $39,500, Cafeteria Fund), and that authority to sign the agreement be exercised pursuant to BUSD AR 3314, as presented.
Oliver Packaging 062526.pdf

13.ag Approval of Renewal Agreement with LunchAssist, Inc. for Professional Services and Training (Cafeteria Fund)
Jason Hasty, Assistant Superintendent of Business Services, recommends that the Board of Education approve the renewal agreement between Burbank Unified School District and LunchAssist, Inc. for professional services, training, and LunchAssist PRO access, effective October 28, 2026 through June 30, 2027, not to exceed $20,635.00 (13.0-53100.0-00000-37000-5850-7490000, Cafeteria Fund), and that authority to sign the contract pursuant to BUSD AR 3314, as presented.
LunchAssist 26-27 062526.pdf

13.ah Approval of Award of Contract, California Paving & Grading, Patch Existing Playground Asphalt, Thomas Edison Elementary School (Deferred Maintenance)
Jason Hasty, Assistant Superintendent of Business Services, recommends that the Board approve the contract award between the Burbank Unified School District and California Paving & Grading for the patching of existing playground asphalt at Thomas Jefferson Elementary School, not to exceed $39,555.00 (14.0-00000.0-00000-85000-5810-2060000, Deferred Maintenance), effective July 1, 2026 through June 4, 2027, and that authority to sign the agreement be exercised pursuant to BUSD AR 3314, as presented.
6-25 AOC_CA Paving_Thomas Jefferson.pdf

13.ai Approval of Amended Agreement for Professional Services, Lozano Smith, Attorneys at Law, (General, Bond, and Special Education Funds)
Jason Hasty Assistant Superintendent of Business Services, approve the amended agreement between the Burbank Unified School District and Lozano Smith, Attorneys at Law, effective July 1, 2025 through June 30, 2026, increasing the not to exceed amount by $200,000, for a new total not to exceed $703,000, to be paid primarily from the General Fund (01.0-00000.0-00000-72000-5820-7400000), with Bond Fund (21.0-00000.0-00000-85000-5820-7400000) and Special Education Fund (01.0-65000.0-50010-21000-5820-7440000) charged when appropriate based on the legal matter, and that authority to sign the agreement be exercised pursuant to BUSD AR 3314, as presented.

Note: The agreement was originally ratified on September 4, 2025, for a total not to exceed $403,000 and was later amended to increase the total not-to-exceed amount to $503,000. This second amendment provides additional funding authority for outstanding invoices and legal services through June 30, 2026.

Lozano Smith amended 25-26 062526.pdf

13.aj Approval of Professional Services Agreement, Ninyo & Moore, Compaction and Welding Testing Services for Two (2) Relocatable Classrooms, Adult School Annex (Adult Education Fund)
Jason Hasty, Assistant Superintendent of Business Services, recommends that the Board of Education approve the professional services agreement between Burbank Unified School District and Ninyo & Moore for compaction and welding testing services for the Two (2) Relocatable Buildings Project at Burbank Adult School, effective June 26, 2026 through June 25, 2027, not to exceed $10,626.00 (Adult Education Fund), and that authority to sign the agreement be exercised pursuant to BUSD - AR 3314, as presented.
AOPA_NinyoMoore_Adult School_BAS.pdf

13.ak Approval of Award of Contract, OPTERRA Energy Services, Purchase of Spare Solar Panels to Support Replacement and Future Repairs to District Photovoltaic Systems (Restricted Routine Maintenance)
Jason Hasty, Assistant Superintendent of Business Services, recommends that the Board of Education approve the award of contract between Burbank Unified School District and OPTERRA Energy Services for the purchase of one pallet, consisting of twenty-two (22) SolarWorld SW 340 XL Mono spare solar panels, to support replacement and future repairs to District photovoltaic systems, effective June 26, 2026, through June 25, 2027, not to exceed $11,269.90 (Restricted Routine Maintenance Fund), and that authority to sign the contract be exercised pursuant to BUSD - AR 3314, as presented.
AOC_OPTERRA_PanelRepair_Various Sites_RRM.pdf

13.al Approval of Notice of Completion, Reliable Floor Covering Inc., CUPCCAA Bid 2526-017, Furnish and Install Flooring in Three (3) Classrooms, Burbank Adult School (Adult Education Fund)
Jason Hasty, Assistant Superintendent of Business Services recommends that the Board of Education approve the Notice of Completion for Reliable Floor Covering Inc., for CUPCCAA Bid No. 2526-017, flooring replacement in three (3) classrooms at Burbank Adult School, and accept the project as complete.
NOC_Reliable Flooring_Adult Ed.pdf

13.am Approval of Award of Contract, Sierra School Equipment Co., Furnish and Install New Crusader Chairs, Auditorium, Washington Elementary (Gift Fund)
Jason Hasty, Assistant Superintendent of Business Services, recommends that the Board of Education approve the award of contract with Sierra School Equipment Company to furnish and install new Crusader chairs in the auditorium at Washington Elementary School, effective June 26, 2026, through June 25, 2027, not to exceed $120,281.00 (Gift Funds), and that authority to sign the contract be exercised pursuant to BUSD - AR 3314, as presented.
AOC_Sierra Equipment_Washington_Gift.pdf

13.an Amendment of Agreement for Professional Services
Peter Knapik, Assistant Superintendent of Educational Services, recommends that the Board of Education approves the amended agreement for services between the Burbank Unified School District and Covelo Group Inc. to provide other health services on an "as needed" basis when other qualified staff are not available effective August 22, 2025 through June 30, 2026, not to exceed $122,000 (01.0-00000-11100-10000-5810-7450000), and that the authority to sign the agreement be exercised pursuant to BUSD/AR 3314, as presented.

Board Memo-Covelo 25-26 - AMENDED.pdf

13.ao Approval of Deductive Change Order No. 1, The Garland Company, Inc., Purchase Order No. 26002689: Summer 2026 Roofing Project, Thomas Edison Elementary School â€" Roofing Materials (Measure ABC Bond Fund)
Jason Hasty, Assistant Superintendent of Business Services, recommends that the Board approve Deductive Change Order No. 1, The Garland Company, Inc., Purchase Order No. 26002689: Summer 2026 Roofing Project, Thomas Edison Elementary School â€" Roofing Materials, reducing the purchase order by $7,229.90 for a revised not to exceed $88,300.34, (21.0-00000-0-00000-85000-4310-2020000, Measure ABC Bond Fund), and that authority to sign the agreement be exercised pursuant to BUSD AR 3314, as presented.
Garland CO.pdf

13.ap Approval of Amendment to the Fiscal Support Services Contract with the Los Angeles County Office of Education (General Fund)
Jason Hasty, Assistant Superintendent of Business Services, recommends that the Board of Education approve the amendment to the Fiscal Support Services contract with the Los Angeles County Office of Education, extending the term through June 30, 2027, and increasing the contract amount by $60,000, for a revised total contract amount not to exceed $90,000 (General Fund), and authorize the Superintendent or designee to execute the amendment pursuant to BUSD-AR 3314, as presented.
LACOE Fiscal Support Services 062526_Redacted.pdf

13.aq Approval of Amendment to the Los Angeles County Office of Education (LACOE) BEST Advantage and HRS System Maintenance and Support Contract 2025-2030
Business Services, recommends that the Board of Education approve amendment to the agreement between Burbank Unified School District and Los Angeles County Office of Education (LACOE) for the BEST Advantage System, not to exceed $139,876 for fiscal year 2026-27 (01.0-00000.0-00000-77000-5890-0000000), effective, July 1, 2025 through June 30, 2030, and that authority to sign the agreement be exercised pursuant to BUSD AR 3314, as presented.
Amendment LACOE Best Advantage System Contract 062526.pdf

13.ar Approval of Agreement for Professional Services â€" School Business Inc. (Business Services)
Business Services recommends that the Board of Education approve the Agreement between the Burbank Unified School District and School Business Inc., for professional business services effective July 1, 2026 through June 30, 2027, not to exceed $75,000, and authorize the Superintendent or designee to execute the agreement pursuant to BUSD-AR 3314, as presented.
School Business Inc 062526.pdf

13.as Approval of Agreement Between the Burbank Unified School District and Evernorth Behavioral Health, Inc. (Human Resources)
Human Resources Services, recommends that the Board of Education approve the Agreement between the Burbank Unified School District and Evernorth Behavioral Health Inc. for the Employee Assistance Program, effective January 1, 2027 through December 31, 2028, and that authority to sign the Agreement be exercised pursuant to BUSD-AR 3314, as presented.
Approval of Agreement Between the Burbank Unified School District and Evernorth Behavioral Inc. (Human Resources).pdf

13.at Ratification of Agreement for Professional Services (Human Resources)
Human Resources Services recommends that the Board of Education ratify the Agreement for Professional Services between the Burbank Unified School District and School Services of California to assist with the 2025-2026 layoff process, effective December 1, 2025 through June 30, 2026, and the authority to sign the agreement be exercised pursuant to BUSD--AR 3314, as presented.
Ratification of Agreement for Professional Services.pdf

13.au Approval of Contract with Becker & Miyamoto, Inc. for Boundary Survey and Title Review Services at Various Sites (Measure ABC Bond Fund)
Jason Hasty, Assistant Superintendent of Business Services, recommends that the Board of Education approve the proposal from Becker & Miyamoto, Inc., for boundary survey and title review services at various Burbank Unified School District sites, not to exceed $141,500.00 (Measure ABC Bond Funds), and that authority to sign the agreement be exercised pursuant to BUSD AR3314, as presented.
Various Sites Bdry RS.pdf

13.av Approval of Professional Services Agreement, Greg Powell dba Architecture Plus Inc., DSA Certification Closeout Services, Various Sites (Measure ABC Bond Fund)
Business Services recommends that the Board of Education approve the Professional Services Agreement between Greg Powell dba Architecture Plus Inc. and the Burbank Unified School District for Division of the State Architect (DSA) certification closeout services at various sites, not to exceed $54,730 (21.0-00000.0-91008-85000-6282-75200000, Measure ABC Bond Fund), and that authority to sign the agreement be exercised pursuant to BUSD â€“ AR3314, as presented.
Amend_Greg_Powell.pdf

14. REPORTS FROM BOARD MEMBERS

14.a Reports from Board Members
Board of Education members will report on items within the jurisdiction of the Board.

15. ADJOURNMENT

Burbank Unified School District
Office of the Superintendent
1900 W. Olive Avenue
Burbank, CA 91506
Ph: 818.729.4442

Board of Education
Abigail Pontzer Kamkar, President
Dr. Emily Weisberg, Vice President
Laurette Cano, Clerk
Kelsey Olson
Dr. Armond Aghakhanian

Interim Superintendent
Oscar Macias, Ed.D.

June 25, 2026

Dear BUSD Community,

In June 2025, following an internal investigation by District staff, we learned that former Board member Charlene Tabet participated in approving, and likely personally profited from, a contract now widely known as the Specialized Support Services (SSS) contract. In the course of staff's internal investigation, additional issues of concern, involving Tabet and others, also came to light. Because of the seriousness of the SSS contract and some of these other concerns, the Board directed the District's general counsel to retain an independent investigator, the Sobel Group (Sobel), to conduct a thorough, independent investigation. At the time the Board authorized this investigation, we also committed to provide the BUSD community with additional information as appropriate and as available.

Sobel's report is now complete. While it is an attorney-client privileged document, consistent with our commitment to share additional information, we are providing an Executive Summary of Sobel's key findings on the primary issues of concern. Employees' names and most titles have generally been omitted from the summary in an abundance of caution to ensure compliance with employee confidentiality, privacy, and other protected interests.

The District's general counsel will provide a presentation of the key findings at the Board's June 25, 2026 regular meeting. Finally, early in the new school year, the Board will make the findings from the Sobel report available for review to the BUSD community after appropriate redactions are completed by District counsel.

With regard to the SSS contract, the report confirms what we knew from staff's internal investigation but with significantly more detail. Former Trustee Tabet abused her office and breached the trust of the Board, the District, and the BUSD community for personal gain. She also misused her office to obtain preferential treatment or advantage in other ways over the course of years. The report further reveals how and when others in the District had knowledge of, participated in, or supported (often under pressure) Tabet's activities.

Finally, the report also revealed important weaknesses in the District's human resources, fiscal and other operational policies, procedures and practices that must be addressed.

To be clear, the report reveals unacceptable lapses and conduct at many levels within the District. Regardless, the care and shepherding of the District ultimately falls on the Board, and we are firmly committed to fulfilling that responsibility. The completion of the Sobel investigation and leadership's critical analysis of its findings is an important step in continuing that work. But this will not be our first step, nor is it likely to be our last.

Whatever further actions are needed based on the Sobel findings will continue under the leadership of our new Superintendent, Dr. Tom McCoy. We are confident in, and excited about, Dr. McCoy's leadership and vision. He already has a clear action plan, in partnership with the Board, to take any additional steps needed to address this unfortunate past and most importantly return our community focus to our core mission of teaching, learning, and offering the best, high quality instructional programs available to our students and families.

Sincerely,
Board of Trustees
Burbank Unified School District

Burbank Unified School District
Office of the Superintendent
1900 W. Olive Avenue
Burbank, CA 91506
Ph: 818.729.4442

Board of Education
Abigail Pontzer Kamkar, President
Dr. Emily Weisberg, Vice President
Laurette Cano, Clerk
Kelsey Olson
Dr. Armond Aghakhanian

Interim Superintendent
Oscar Macias, Ed.D.

THE SOBEL GROUP INVESTIGATION

EXECUTIVE SUMMARY OF INVESTIGATION AND KEY FINDINGS

In June 2025, the Board of Trustees, through District General Counsel, retained The Sobel Group, Inc., (Sobel) to conduct a thorough, independent investigation of the Specialized Support Services (SSS) contract and other District-related concerns. The Board's goal was to obtain an objective, outside third-party review of District staff's internal investigation of the SSS contract and investigate other concerns that came to light in the course of that internal investigation.

Sobel has completed its work and submitted its report. The report is a confidential, attorney-client privileged document. However, in furtherance of the Board's commitment to share relevant information regarding the SSS contract with BUSD community, the Board is providing this summary of key findings from the investigation.

Additionally, in furtherance of our transparency commitment, early in the new school year the Board will make a redacted version of the Sobel report available for public review after appropriate redactions are completed by District counsel to protect employee confidentiality and other protected rights and interests.

INVESTIGATION OVERVIEW

Sobel interviewed thirty-four (34) witnesses and reviewed extensive written and other documentation, resulting in a comprehensive report covering the SSS contract and other issues of concern. Notably, former Board member Charlene Tabet (Tabet) and former Superintendent Dr. John Paramo (Paramo) both declined to participate in the investigation. Sobel's key findings are summarized below.

The SSS Contract

Tabet was the owner of SSS and intentionally tried to conceal this information from the District. Certain District staff, including Paramo, did know or should have known of Tabet's involvement in SSS at or near the inception of the contract in August or September 2024. The contract was approved by the Board in September 2024. At that time, the other members of the Board did not have knowledge of Tabet's personal involvement in SSS or the contract and did not learn this information until May or June 2025.

In August 2024, a District employee did have concerns about the SSS contract and Tabet's involvement. The employee shared those concerns with one District leader, but neither shared those concerns with anyone else in the District, including other members of the Board.

Contrary to District procedure, SSS did not submit adequate documentation of services performed in order to receive payment. Instead, a District employee both prepared and approved an invoice for payment to SSS. Further, SSS largely did not perform and deliver the work required by the contract, which certain staff members knew. However, SSS was still paid the full contracted amount of $90,000, in addition to a $3,000 overpayment, for a total payment of $93,000.

The Knoll Contract

Paramo led the hiring of his personal trainer, Isaiah Knoll, to provide athletic training services for students. The hiring process did not follow normal District procedure. Members of District staff had serious concerns regarding Knoll's qualifications and experience to perform the services. Despite these concerns, the contract was approved and payments to Knoll were approved by Paramo and/or another member of District leadership, presumably at Paramo's direction. Contrary to standard District practice, the payment warrants for the trainer were routed to the Superintendent's office instead of being mailed to the trainer.

Vikings Field Use

Tabet was the President of Vikings Youth Sports Program (Vikings). Over a period of years, Tabet used her position as a Board member to gain preferential access to the use of District facilities for Vikings. Tabet pressured and intimidated District staff to allow Vikings to book the use of District football fields out of compliance with District facility use policies and procedures. Tabet also used this preferential access, with preferential rates, to then sublet the fields at higher rates to other users. In some instances, even where another group had the right to use a facility with a proper use permit, Vikings would force the other group to give up their use in favor of use by Vikings. Vikings also did not pay all of its invoiced fees or consistently comply with other District use requirements, but was still permitted continued facility use because of Tabet's intimidation of or pressure on District employees.

Christmas Tree Lot

Tabet took over the operation of a Christmas tree lot business that used a District school site for several years. Tabet did not contribute a portion of the lot sales to the school site, contrary to what was promised or represented. It is undetermined whether Tabet requested or was issued a use permit to operate the lot on the school site.

Storage Containers

Tabet arranged for the placing of multiple storage units on District property without a use permit or other proper authorization for her use. For an extended period, District staff did not have access to the units and did not know what they were used for. When District staff ultimately gained access to the units, staff discovered items related to the Christmas tree lot, Vikings, and what appeared to be personal items related to Tabet or one of her associates.

Operational Weaknesses

The report also revealed weaknesses in the District human resources, fiscal and other operational policies, procedures and practices. For example, among other issues, there has been (i) a lack of appropriate controls for District facility access keys; (ii) a lack of proper controls and separation of responsibilities for payroll approvals; and (iii) inappropriate sharing of District system access credentials between employees.

SPECIFIC KEY FACTUAL FINDINGS

Findings Related to SSS

- SSS is owned by Tabet and she tried to hide her personal involvement in SSS from the District.
- On September 5, 2024, the Board approved the SSS contract, a vote in which Tabet participated.
- At the time the contract was approved, the other members of the Board were not aware of Tabet's involvement in SSS or the contract. They became aware of Tabet's personal involvement in SSS and the contract in May or June 2025.
- Tabet used her position as Board member to intimidate, influence, and threaten District employees with regard to the SSS contract.
- Paramo and another District employee knew or should have known of Tabet's personal involvement with SSS in August or September 2024.
- At or near the time the SSS contract was originally approved, a District employee involved in its approval had concerns about the contract and reported those concerns to a member of District staff leadership, but neither reported those concerns to anyone else.
- Certain District employees were aware that SSS was not providing sufficiently completed work product under the contract but still authorized and made payments to SSS.
- Payments were made to SSS without invoice documentation provided by SSS. Rather, requests for payments to SSS were internally generated by a District employee on behalf of SSS.
- Payment warrants for SSS were re-directed to the Superintendent's office and held for Tabet to pick up in person.
- The contract amount was in excess of what the District would have paid an internal employee or another outside contractor for the contracted services.
- Total payments made to SSS were in excess of the contracted amount by $3,000.

Findings Related to the Isaiah Knoll Contract

- Knoll was the personal trainer for Paramo.
- Paramo arranged for the District to hire Knoll to perform athletic training services to District students, bypassing normal hiring procedures.
- Several District staff members had serious concerns regarding Knoll's credentials and experience to provide the services.

- Several District staff members had concerns that Knoll was not in fact providing all of the contracted services for which he was being paid.

- One senior member of District staff leadership with concerns regarding the Knoll contract signed off on payments to Knoll at the direction of Paramo.

- Knoll's payments were re-directed to the Superintendent's office rather than being mailed to Knoll.

Findings Related to Vikings

- Tabet was the Viking's President and used her Board position to intimidate, influence, and threaten BUSD employees in order to procure preferential District facilities use for Vikings.

- The District offered a three-tier fee and priority structure for facility use. Vikings paid the Category 1 lower fee; however, based upon its entity status, Vikings should have paid the higher Category 3 fee.

- Vikings "kicked" other groups off of District fields, even when those groups had the appropriate field use permit.

- Due to its preferential treatment, Vikings was able block field use dates from other organizations and then sublet use to those other organizations at a higher fee than Vikings was charged.

- Vikings did not fully pay their invoiced fees to the District.

- Vikings did not maintain its 501(c)(3) status, being in delinquent status since January 2022 as well as suspended status with the California Franchise Tax Board.

Findings related to District Operations

- A need to update and modernize the District's human resources, fiscal, and payroll systems to ensure accurate, timely, and verifiable processes with appropriate segregation of duties

Burbank Unified School District
Administrative Services

REPORT TO THE BOARD

TO: Members of the Board of Education

FROM: Jason Hasty, Assistant Superintendent of Administrative Services

PREPARED BY: Maricela Salinas, Director of Fiscal Services

SUBMITTED BY: Cheretta Wade, Administrative Secretary II

DATE: June 26, 2026

SUBJECT: Report on Excess Reserves

Background:

Per Education Code Section 42127(a)(2)(B), districts that propose to adopt a budget that includes a combined assigned and unassigned ending fund balance in excess of the minimum recommended reserve for economic uncertainties (REU) must provide the following information at the public hearing for their proposed budget prior to budget adoption:

- The minimum reserve for REU level required in each year identified in the budget
- The amount of assigned and unassigned ending fund balance that exceeds the REU in each year
- Reasons for the REU being greater than the minimum

District's required REU level:

The District is required to retain a 3% REU, the Board of Education recognizing their duty to maintain fiscal solvency set Board policy to reserve an additional 3%.

District's Assigned and Unassigned Ending Fund Balances:

	2025-26	2026-27	2027-28
Beginning Balance (R&UR)	$38,637,600.71	$37,994,042.12	$34,157,861.27
Revenue (R&UR)	$231,861,685	$231,497,805.26	$234,941,982.99
Expense (R&UR)	$230,755,243.59	$233,583,986.11	$237,028,545.43
Non-Spendable	$ -	$ -	$ -
Assigned Fund Balance	$9,046,111.66	$4,603,314.92	$28,833.95
Committed	$ -	$ -	$ -
Assigned LCAP Supplemental	$ -	$ -	$ -

Restricted Ending Fund Balance	$21,927,771.72	$22,449,526.35	$23,084107.88
Reserve (REU) 3%	$6,975,160.00	$7,060,020.00	$7,163,357.00
Board REU up to 3%	$6,975,160.00	$7,060,020.00	$7,163,357.00
Unassigned Fund Balance	$ -	$ -	$ -

District's Reasons for Unassigned Ending Fund Balance in Excess of REU:

It is prudent for the District to carry an amount over the required and Board approved reserved to protect against the volatility of state revenues.

Financial Impact:

None

Recommendations:

Jason Hasty, Assistant Superintendent of Business Services, will report on the Ending Fund Balance in Excess of reserve for economic uncertainties (REU), as presented.

BUSD Board Resolution 56 on Good Governance **June 25, 2026**

Whereas the Board of Education of the Burbank Unified School District is committed to good governance, sound fiscal practices, a positive workplace, and a primary focus on students; and

Whereas the Board of Education of the Burbank Unified School District shall develop and approve operational norms, meeting protocols, and District goals that reflect good governance memorialized in a guidebook available to the public; and

Whereas the Board of Education of the Burbank Unified School District to protect public confidence in the integrity of the District's work, shall develop and approve an updated policy for a Code of Ethics - Board ByLaw 9271; and

Whereas the Board of Education of the Burbank Unified School District to protect public confidence in the integrity of the District's work, shall develop and approve an updated policy for Limits of Board Member Authority - Board ByLaw 9200; and

Whereas the Board of Education of the Burbank Unified School District to protect public confidence in the integrity of the District's work, shall participate in annual Brown Act Training and shall develop and approve an updated policy for Meeting Conduct - Board ByLaw 9323; and

Whereas the Board of Education of the Burbank Unified School District to protect public confidence in the integrity of the District's work, shall develop and approve an updated policy for Agenda/Meeting Materials - Board ByLaw 9322; and

Whereas the Board of Education of the Burbank Unified School District shall direct the Superintendent to update and modernize the District's human resources, fiscal, and payroll systems to ensure accurate, timely, and verifiable processes with appropriate segregation of duties; and

Whereas the Board of Education of the Burbank Unified School District shall develop and approve an updated policy for Recruitment and Selection of Certificated and Classified Supervisory Personnel - BP 4111/4211/4311; and

Whereas the Board of Education of the Burbank Unified School District shall develop and approve an updated policy for Use of School Facilities - BP 1330; and

Whereas the Board shall meet in Board Retreats to discuss Good Governance, as well as to develop, review, and approve these policies; and

Whereas the Board of Education of the Burbank Unified School District shall develop, review, approve, and implement the policies referenced in this resolution by December 2026; and

Now therefore be it further resolved, that the Burbank Unified School District Board of Education makes a commitment to Good Governance and the work necessary to achieve it

Signed this 25th day of June, 2026

_____
Abigail Pontzer-Kamkar
Board President

_____
Dr. Emily Weisberg
Board Vice President

_____
Laurette Cano
Board Clerk

_____
Dr. Armond Aghakhanian
Board Member

_____
Kelsey Olson
Board Member

Burbank Unified School District
Business Services

REPORT TO THE BOARD

TO:	Members of the Board of Education
FROM:	Jason Hasty, Assistant Superintendent of Business Services
PREPARED BY:	Jason Hasty, Assistant Superintendent of Business Services
SUBMITTED BY:	Terri Ramirez-Adams, Senior Administrative Assistant
DATE:	June 25, 2026
SUBJECT:	Acceptance of the 2024-2025 Measure S Annual Report from the School Facilities Oversight Committee

---

Background:

Measure S was approved by Burbank voters to provide funding for school facility improvements throughout the District. As part of the accountability requirements associated with Proposition 39 general obligation bonds, the School Facilities Oversight Committee is responsible for reviewing bond program activity and providing an annual report to the Board of Education and the community.

Discussion/Issues:

The School Facilities Oversight Committee has prepared the 2024-2025 Measure S Annual Report. The report summarizes the Committee's oversight activities, review of the independent financial and performance audits, and overall assessment of the District's use of Measure S bond proceeds.

Justin Worsham, Chair of the School Facilities Oversight Committee, will present the annual report to the Board of Education. The report provides an overview of the Committee's role and responsibilities and supports accountability and transparency for the Measure S Bond Program.

Fiscal Impact:

There is no fiscal impact.

Recommendation:

Jason Hasty, Assistant Superintendent of Business Services, recommends that the Board of Education accept the 2024-25 Measure S Annual Report as submitted by the School Facilities Oversight Committee, as presented.

School Facilities Oversight Committee

Burbank Unified School District

Volume 1, Issue 12

April 2026

12th Annual Report to the Community

BUSD in compliance with Measure S in 2025 Bond Audit!

To ensure we stayed on track with the District goals and projects scheduled to be done, an accountability safeguard was established for Measure S through our independent Citizens' Oversight Committee. The Committee's charge is to ensure bond proceeds are expended only for the school facilities projects listed in the Bond Project List. The Citizens' Oversight Committee consists of at least seven members who are active in the community, have a vested interest in the District, or are local business owners. No employee or official of the District, vendor, contractor, or consultant of the District can be appointed to the Committee.

Committee Purpose

The Committee is charged by statute with the following purposes:

1. To promptly alert the public to any waste or improper expenditure of school construction Bond money.

2. To inform the public concerning the expenditure of bond revenues.

3. To ensure that bond revenues are expended only for the purposes described in the California Constitution; that is, for the construction, reconstruction, rehabilitation, or replacement of school facilities, including the furnishing and equipping of school facilities, or the acquisition or lease of real property for school facilities.

4. To ensure that no funds are used for any teacher or administrative salaries or other school operating expenses.

Committee Jurisdiction and Authorized Activities

In furtherance of its purposes, the Committee is authorized by statute to engage in the following activities:

1. Receive and review the annual independent performance audit required by the California Constitution.

2. Receive and review the annual independent financial audit required by the California Constitution.

3. Inspect school facilities and grounds to ensure that bond revenues are expended in compliance with the requirements of paragraph (3) of subdivision (b) of Section 1 of Article XIIIA of the California Constitution.

4. Review efforts by the District to maximize the impact of bond expenditures by implementing cost-saving measures, including, but not limited to, all of the following mechanisms:

a. Mechanisms designed to reduce the costs of professional fees.

b. Mechanisms designed to reduce the costs of site preparation.

c. Recommendations regarding the joint use of core facilities.

d. Mechanisms designed to reduce costs by incorporating efficiencies in school design.

e. Recommendations regarding the use of cost-effective and efficient reusable facility plans.

It is also important to note that the Committee does not perform certain functions such as participate in the District's actual bond sale and issuance process nor participate in the bid process for contractors or consultants

(Proposition 39 Roles and Responsibilities, III. I.). It is within these parameters that the Committee performed its functions during the period from July 2024 through June 2025.

Audits

Proposition 39 requires that the sponsoring school district of an approved measure conduct an annual independent performance audit to ensure that the bond funds have been expended only on the specific projects included on the list of projects the district was required to provide when Measure S was presented to the voters.

Proposition 39 also requires that the school district conduct an annual independent financial audit of the proceeds from the sales of the bonds until all the proceeds have been expended for the school facilities projects. In compliance with the above requirements, the annual financial and performance audits of the District's Measure S bond expenditures for the fiscal year ended June 30, 2025 were conducted by Clifton Larson Allen LLP ("CLA"), an independent auditing firm. The report is dated January 26, 2026. With respect to the annual financial audit of the financial statements of the Measure S Building Bond Fund of Burbank Unified School District ("Measure S Bond Fund") for the fiscal year ended June 30, 2025, CLA issued an unmodified opinion. CLA also tested internal controls over financial reporting and compliance with laws, regulations, or provisions of contracts or agreements and determined that no significant deficiencies were noted. The internal errors from the previous year were corrected and action plan implemented; no repeat findings.

With respect to the annual performance audit, CLA found that the District complied, in all material respects, with the types of compliance requirements that are applicable to the Measure S Bond Fund for the fiscal year ended June 30, 2025. CLA reviewed 74% of total general expenditures and $158,659 of salary and benefits charged to Measure S and verified that funds were expended for the construction, renovation, furnishing, and equipping of school facilities constituting authorized bond projects by review of supporting documentation.

The School Facilities Oversight Committee received the Financial and Performance Audits presented by Interim Assistant Superintendent Jason Hasty at the regular committee meeting held on February 11, 2026.

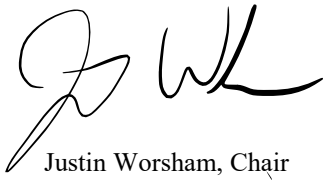

Justin Worsham, Chair
School Facilities Oversight Committee

Committee Members

Justin Worsham, Chair
Carolyn Bisson
Shaun Hasas
Dakota Hughes
Brandon Mullins
Geovanna Waters
Greg Wylie

Alternates Members

Serj Eyvazian
Chantal Sampogna
John Steinreich

Ex-officio Members

Vacant

Facilities Projects 24-25

While it took longer than anticipated, the Disney Ball Wall Project was finally completed and installed in time for the new school year. Also, the long-awaited Teddy Bear Park Improvement Project at Roosevelt Elementary School completed in summer 2024, as well. This project included the blacktop being replaced with new markings for various activities on the lower playground, a new ADA ramp installed from the lower playground to the upper level of campus, and the restrooms were upgraded to current ADA standards per DSA guidelines. A restroom in the TK classroom was installed, as well as a new tree to replace the existing.

New doors and hardware were installed at Huerta Middle, Jefferson Elementary, and Miller Elementary School were also installed during the summer. While there were some hiccups along the way that caused delay, all hardware was operational as of November 2024.

Following many years battling moisture issues, the flooring at Miller Elementary School underwent resurfacing over the summer. The project consisted of removing the existing floor, sandblasting concrete foundation, application of concrete vapor emission sealer/barrier to eliminate moisture, and the installation of new vinyl flooring.

Rubber surfacing was installed at two playground areas at McKinley and one playground areas at Stevenson to repair the sinkholes in the previous artificial turf surface. Edison Elementary School received asphalt patchwork in the playground area to address safety concerns of major cracks.

As Measure S transitions to Measure ABC, the remaining funds are being expended to prepare for the upcoming projects. In preparation for the roofing restorations or replacements that will be funded under Measure ABC, inspections of the existing roofs at the following sites needed to be completed: Jefferson Elementary, Miller Elementary, Washington Elementary, Emerson Elementary, Luther Middle, Muir Middle, Magnolia Park, Monterey High, John Burroughs High, and Burbank High Schools. The inspections were completed in January 2025 with the findings clear of asbestos, however, there were a few sites where lead based paint was found. The lead findings will not interfere with the contractor's work. The roofing projects at these sites are slated to begin in the summer and wrap up before the new school year starts, funded through Measure ABC.



Miller Flooring Project

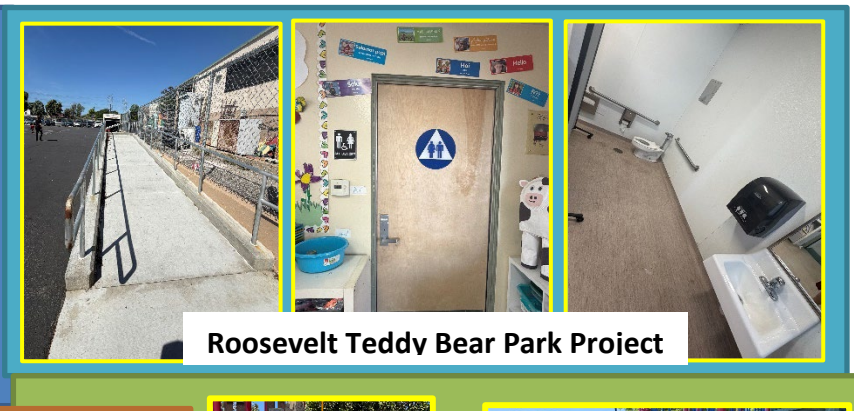

Roosevelt Teddy Bear Park Project



Disney Ball Wall



Stevenson Rubber Resurfacing

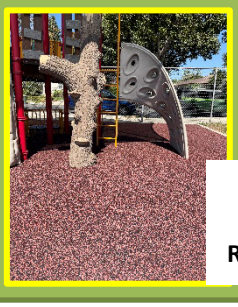



McKinley Rubber Resurfacing

TECHNOLOGY PROJECT WRAP UP 24-25

- All existing cameras will be integrated into a newly designed surveillance system, a unified platform. This enables school staff to monitor campus activities efficiently through a single integrated system.
- Installation of additional surveillance cameras at Burbank High School to cover more areas of the campus.
- The E-Rate projects are being transitioned under the umbrella of the network infrastructure project with a new contractor, AMD/MGT, as NTT demonstrated the inability to complete the project successfully and properly in a timely manner.

Financial Recap
Revenues and Expenditures since Bond Passage
Through June 30, 2025

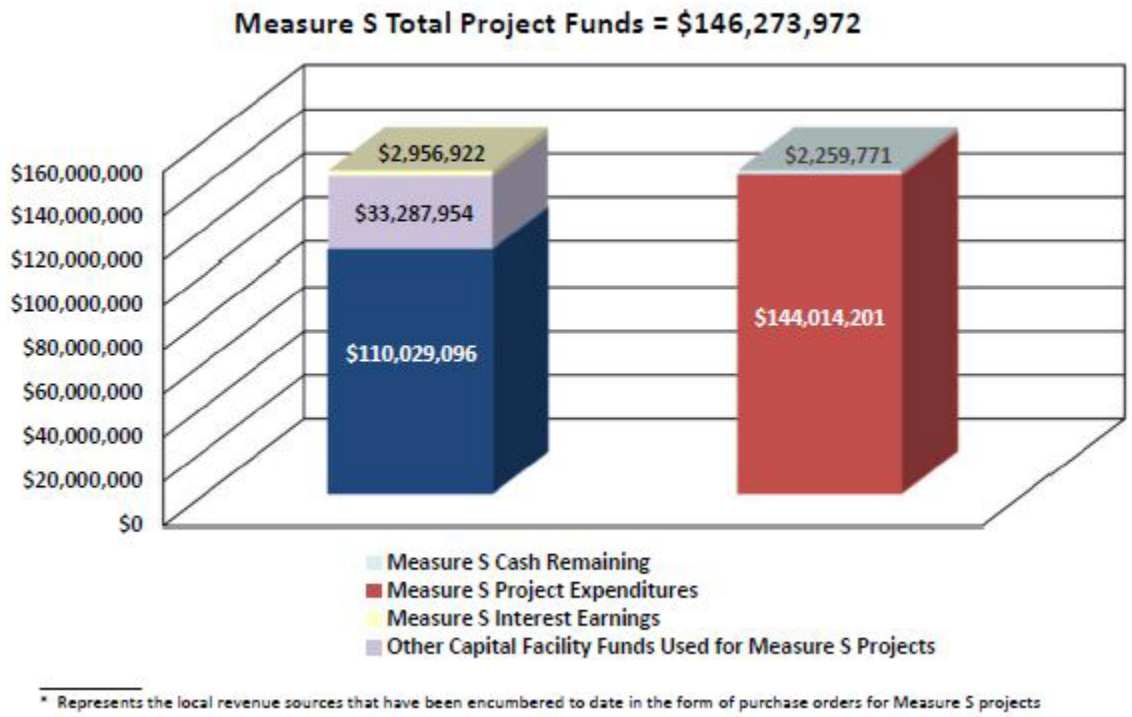

* Represents the local revenue sources that have been encumbered to date in the form of purchase orders for Measure S projects

In addition to the Measure S $110 million bond, the District has also been utilizing other sources of income to complete projects to modernize the schools.

BURBANK UNIFIED SCHOOL DISTRICT
STATEMENT OF REVENUES, EXPENDITURES, AND CHANGES IN FUND BALANCE
MEASURE S BOND BUILDING FUND
YEAR ENDED JUNE 30, 2025

REVENUES		
Interest and Investment Income	$	115,555
Total Revenues		115,555
EXPENDITURES		
Salaries		108,394
Benefits		50,265
Supplies		121
Other Services		114,613
Capital Outlay		2,328,123
Total Expenditures		2,601,516
DEFICIENCY OF REVENUES OVER EXPENDITURES		(2,485,961)
Fund Balance - Beginning of Year		4,195,725
FUND BALANCE - END OF YEAR	$	1,709,764

School Facilities Oversight Committee

Burbank Unified School District

Volume 1, Issue 12

12th Annual Report to the Community
2025 In Summary

April 2026

Measure S has come a long way since its approval by the Burbank community in 2013, allowing Burbank Unified School District to complete over 200 bond projects throughout the District.

The final projects to expend the rest of the dollars as Measure ABC bond starts, have been completed. This past year, Burbank Unified was able to complete the Roosevelt Elementary Teddy Bear Project that finished over the summer with the playground blacktop being replaced, updated ADA restrooms, and new access between the upper and lower playgrounds;

In addition to the finalizations of the major projects, the District also worked on updating the doors and hardware at Jefferson and Miller Elementary Schools, as well as Huerta Middle School. The first floor of the Miller Elementary building also had moisture issues which was found through testing. To remedy this issue, the floor was removed and new surfacing was placed. To expend the last bit of the funds, the playground rubber surfacing at McKinley and Stevenson were replaced due to sinkholes in the existing turf.

The final projects included asbestos and lead testing and the preparation for the roofing projects that will be funded from Measure ABC.

Burbank Unified School District has completed the projects budgeted for this bond, managed and prioritized its project list, resulting in almost all sites receiving some, if not most, of their planned site improvements. There is still room for more work to be done as the District grows and evolves.

As this bond closes out its final projects and expends the final dollars, the District is evaluating the next phase in continued classroom modernizations, technology advancements, facility improvements, and continued replacement of aging infrastructure. These projects, in part, will consist of:

- Additional security and safety upgrades
- Technology upgrades
- HVAC improvements
- Expanded use of energy management software
- Door and lock hardware upgrades District-wide
- Asphalt replacement at several sites
- Extra fencing to enhance security.

The District will begin Measure ABC bond projects this summer beginning with roofing on 10 school sites.



Burbank Unified School District
Business Services

REPORT TO THE BOARD

TO:	Members of the Board of Education
FROM:	Jason Hasty, Assistant Superintendent of Business Services
PREPARED BY:	Jason Hasty, Assistant Superintendent of Business Services
SUBMITTED BY:	Terri Ramirez-Adams, Senior Administrative Assistant
DATE:	June 25, 2026
SUBJECT:	Acceptance of the 2024-2025 Measure ABC Annual Report from the School Facilities Oversight Committee

---

Background:

Measure ABC was approved by Burbank voters to provide funding for school facility improvements throughout the District. As part of the accountability requirements associated with Proposition 39 general obligation bonds, the School Facilities Oversight Committee is responsible for reviewing bond program activity and providing an annual report to the Board of Education and the community.

Discussion/Issues:

The School Facilities Oversight Committee has prepared the 2024-2025 Measure ABC Annual Report. The report summarizes the Committee's oversight activities, review of the independent financial and performance audits, and overall assessment of the District's use of Measure ABC bond proceeds.

Kirsten Morris, Chair of the School Facilities Oversight Committee, will present the annual report to the Board of Education. The report provides an overview of the Committee's role and responsibilities, acknowledges the work of the Committee members, and presents the Committee's recommendation.

Fiscal Impact:

There is no fiscal impact.

Recommendation:

Jason Hasty, Assistant Superintendent of Business Services, recommends that the Board of Education accept the 2024-25 Measure ABC Annual Report as submitted by the School Facilities Oversight Committee, as presented.

School Facilities Oversight Committee

Burbank Unified School District

Volume 1, Issue 1

May 2026

1st Annual Report to the Community

BUSD in compliance with Measure ABC in 2025 Bond Audit

Committee Members

Kirsten Morris, Chair

Diana Abasta, Vice Chair

Preston Joseph, Clerk

Ari Altman

Diana Simon

Matt Benson

Jason Clark

Alternates Members

Julie Grair

Victor Taraceha

Bilyana Decker

Ex-officio Members

Vacant

To ensure we stayed on track with the District's goals and projects scheduled to be done, an accountability safeguard was established for Measure ABC through our independent Citizens' Oversight Committee. The Committee's charge is to ensure bond proceeds are expended only for the school facilities projects listed in the Bond Project List. The Citizens' Oversight Committee consists of at least seven members who are active in the community, have a vested interest in the District, or are local business owners. No employee or official of the District, vendor, contractor, or consultant of the District can be appointed to the Committee.

Committee Purpose

The Committee is charged by statute with the following purposes:

1. To promptly alert the public to any waste or improper expenditure of school construction Bond money.
2. To inform the public concerning the expenditure of bond revenues.
3. To ensure that bond revenues are expended only for the purposes described in the California Constitution; that is, for the construction, reconstruction, rehabilitation, or replacement of school facilities, including the furnishing and equipping of school facilities, or the acquisition or lease of real property for school facilities.
4. To ensure that no funds are used for any teacher or administrative salaries or other school operating expenses.

Committee Jurisdiction and Authorized Activities

In furtherance of its purposes, the Committee is authorized by statute to engage in the following activities:

1. Receive and review the annual independent performance audit required by the California Constitution.
2. Receive and review the annual independent financial audit required by the California Constitution.
3. Inspect school facilities and grounds to ensure that bond revenues are expended in compliance with the requirements of paragraph (3) of subdivision (b) of Section 1 of Article XIIIA of the California Constitution.
4. Review efforts by the District to maximize the impact of bond expenditures by implementing cost-saving measures, including, but not limited to, all of the following mechanisms:
   a. Mechanisms designed to reduce the costs of professional fees.
   b. Mechanisms designed to reduce the costs of site preparation.
   c. Recommendations regarding the joint use of core facilities.
   d. Mechanisms designed to reduce costs by incorporating efficiencies in school design.
   e. Recommendations regarding the use of cost-effective and efficient reusable facility plans.

It is also important to note that the Committee does not perform certain functions such as participate in the District's actual bond sale and issuance process nor participate in the bid process for contractors or consultants (Proposition 39 Roles and Responsibilities, III. I.). Although the committee was not officially formed until October 2025 due to leadership turnover, the Committee performed its functions in reviewing the expenditures for the period from July 2024 through June 2025.

Audits

Proposition 39 requires that the sponsoring school district of an approved measure conduct an annual independent performance audit to ensure that bond funds are expended only on specific projects listed when Measure ABC was presented to the voters. It also requires an annual independent financial audit of the bond proceeds until all funds have been expended.

In compliance with these constitutional requirements, the inaugural annual financial and performance audits of the District's Measure ABC bond expenditures for the fiscal year ended June 30, 2025, were conducted by CliftonLarsonAllen LLP ("CLA"), an independent auditing firm. The final reports were issued on January 26, 2026.

Financial Audit Findings

With respect to the annual financial audit of the Measure ABC Bond Building Fund, CLA issued an **unmodified opinion**. The auditors reviewed the revenue and expenditure statements and fund balance, concluding that the financial statements present fairly, in all significant respects, the financial position of the Measure ABC bond fund as of June 30, 2025.

Furthermore, CLA tested internal controls over financial reporting and compliance with laws, regulations, and provisions of contracts. **No material weaknesses or significant deficiencies were identified** in the internal controls of the Measure ABC fund.

Performance Audit Findings

With respect to the annual performance audit, CLA found that **the District complied, in all material respects, with the compliance requirements** applicable to the Measure ABC Bond Fund.

- **Audit Testing Scope:** The general ledger and project listings identified total expenditures of **$26,632,352** for the fiscal year ended June 30, 2025. CLA selected a rigorous judgmental sample of 23 transactions totaling **$20,311,382**. This sample represented **76% of all total expenditures** for the year.
- **Audit Conclusion:** The results of these tests confirmed that all evaluated expenditures were fully supported by invoices, carried evidence of proper administrative approval, possessed documentation of receipt of goods or services, and were legally expended on authorized voter-approved bond projects.

The School Facilities Oversight Committee formally received and reviewed these independent audits at the regular committee meeting held on February 4, 2026.

Kirsten Morris, Chair
School Facilities Oversight Committee

24-25 Facilities Projects

To Jumpstart Measure ABC, Burbank Unified School District did a district-wide roof assessment to identify the conditions of the roofs at each site, following a year of major leaks. The sites that had poor conditions were top priority to be slated for repairs/replacement during summer 24-25, as listed below:

Luther Middle School (21 roofs)
Muir Middle School (12 roofs)
Magnolia Park (1 roof)
Monterey High (6 roofs)
Burbank High School (6 roofs)
John Burroughs High (9 roofs)
Emerson Elementary (9 roofs)
Jefferson Elementary (9 roofs)
Miller Elementary (8 roofs)
Washington Elementary (8 roofs)

The Garland Company manufactured all of the material while the roof installations were done by Best Contracting, AME Builders, and R&R Waterproofing, all union labor vendors. All ten (10) sites received a 5-year workmanship warranty from the installers. It took 2.5 months to complete all 10 sites. $3-4M was saved through a CMAS contract, with an additional $4M saved with discounts.

Burbank High School (Progress)



Ralph Emerson Elementary

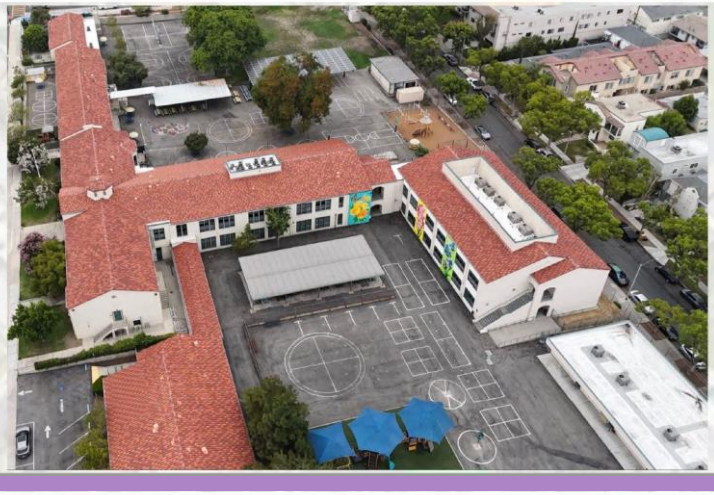

John Muir Middle School



Joaquin Miller Elementary

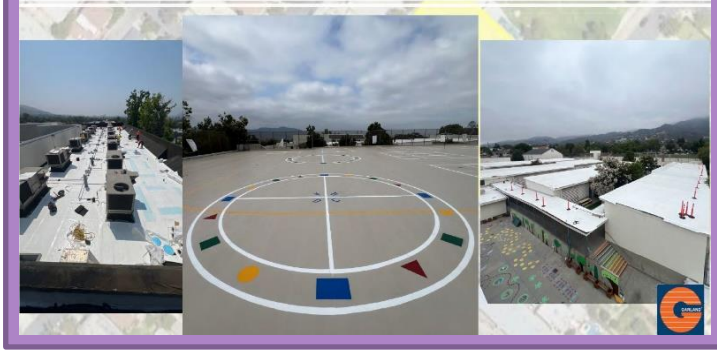

Upcoming Planned Facilities Bond Projects

- Continue roofing projects for the other sites that are in poor/fair condition
- Girls Softball Fields at both Burbank High and John Burroughs High School
- Districtwide HVAC improvements
- Security Access and ADA upgrades

Financial Recap
Revenues and Expenditures since Bond Passage
Through June 30, 2025

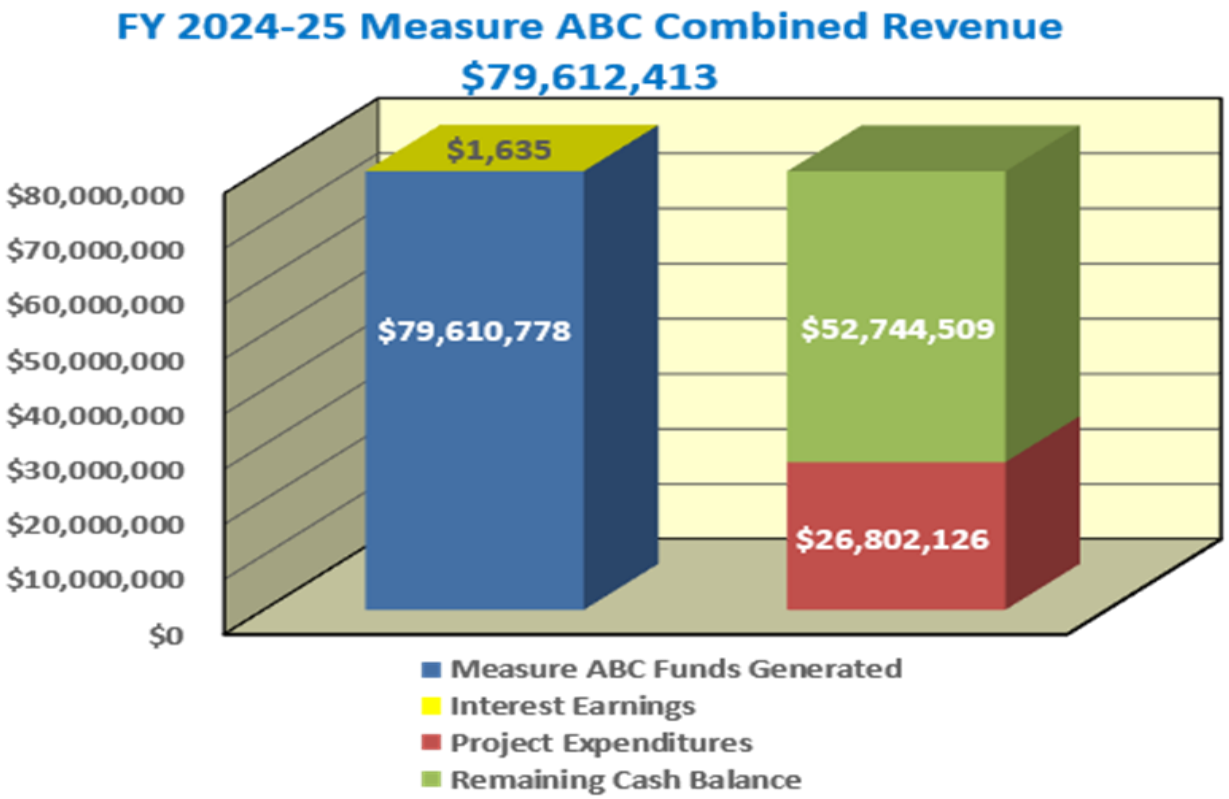

BURBANK UNIFIED SCHOOL DISTRICT
STATEMENT OF REVENUES, EXPENDITURES, AND CHANGE IN FUND BALANCE
MEASURE ABC BOND BUILDING FUND
YEAR ENDED JUNE 30, 2025

REVENUES	
Interest and Investment Loss	$ 1,635
Total Revenues	1,635
EXPENDITURES	
Services and Other Operating Expenditures	455,960
Capital Outlay	26,176,392
Total Expenditures	26,632,352
DEFICIENCY OF REVENUES OVER EXPENDITURES	(26,630,717)
OTHER FINANCING SOURCES	
Sale of Bonds	80,000,000
Total Other Financing Sources	80,000,000
NET CHANGE IN FUND BALANCE	53,369,283
Fund Balance - Beginning of Year	-
FUND BALANCE - END OF YEAR	$ 53,369,283

School Facilities Oversight Committee

Burbank Unified School District

Volume 1, Issue 1

1st Annual Report to the Community 2026 In Summary

May 2026

John Burroughs High



Magnolia Park School



On November 5, 2024, City of Burbank residents voted for Measure ABC Bond for Burbank Unified School District under the Proposition 39 statutes. Measure ABC authorized the issuance of $458,205,000 million in G.O. Bonds. The net proceeds of the Bonds are intended to improve the quality of education; make health, safety and security improvements; construct, modernize, and renovate classrooms, restrooms and school facilities; upgrade outdated electrical, plumbing, HVAC, and sewer infrastructure; and replace leaky roofs. With the former bond, Measure S, coming to a close, Measure ABC is slated to pick up where it left off and focus on district-wide roofing repairs, HVAC improvements, technology upgrades, expanded use of energy management software, district-wide door and lock hardware upgrades, asphalt replacement at several sites, upgrade outdated infrastructure, and additional health, security and safety upgrades.

The bond dollars will be dispersed in several series. The first series is for $80 million dollars to expend, with the roofing projects as the top priority, along with the Tech infrastructure that did not get completed under Measure S. While half of the roofs were worked on in the 24-25 summer, the other half are slated for the 25-26 summer. With new District leadership and a new oversight committee, Measure ABC will be making progress in the 25-26 school year to get more projects started.

Monterey High School (Before)



Monterey High School (After)



14.a) Reports from Board Members

Board of Education members will report on items within the jurisdiction of the Board.

Member Olson praised Burbank Adult School Graduation ceremony.

President Pontzer Kamkar also thanked Burbank Adult School for their invitation.

President Pontzer Kamkar read the retirees.

15) ADJOURNMENT

Meeting adjourned at 11:22 p.m.

MINUTES APPROVED:

OSCAR MACIAS, INTERIM SUPERINTENDENT
SECRETARY OF THE BOARD

6/25/2026

DATE

LAURETTE CANO, CLERK

Burbank Unified School District
Business Services

REPORT TO THE BOARD

TO:	Members of the Board of Education
FROM:	Jason Hasty, Assistant Superintendent of Business Services
PREPARED BY:	Maricela Salinas, Director of Fiscal Services
SUBMITTED BY:	Terri Ramirez-Adams, Senior Administrative Assistant
DATE:	June 25, 2026
SUBJECT:	Adoption of Resolution 57 - Approving the Updated Fiscal Stabilization Plan and Implementation Timeline for Fiscal Years 2026-2027 Through 2028-2029

Background:

The Burbank Unified School District is required to adopt an annual budget and maintain fiscal solvency for the current and subsequent two fiscal years. The District's budget and multiyear projections are reviewed by the Los Angeles County Office of Education (LACOE), which monitors the District's ability to meet required reserve levels and address projected fiscal challenges.

The District adopted an initial Fiscal Stabilization Plan as part of the 2025-26 Second Interim Report to address ongoing structural budget challenges and support long-term fiscal sustainability. Since that time, the District has continued to evaluate budget assumptions, enrollment trends, staffing levels, Special Education expenditures, State funding changes, and operational needs. The updated Fiscal Stabilization Plan reflects these revised assumptions and aligns with the District's 2026-27 Adopted Budget.

Discussion/Issues:

Throughout the 2025-26 budget development process, the Superintendent's Budget Advisory Committee (SBAC) met nine times to review the District's financial condition, State budget updates, enrollment trends, reserve levels, and proposed Fiscal Stabilization Plan strategies. Following presentation of the updated Fiscal Stabilization Plan, committee members were invited to provide written feedback through a stakeholder survey.

Overall, survey respondents expressed support for the District's efforts to address long-term structural budget challenges and rebuild reserves. Members generally agreed that the District should continue pursuing fiscal stabilization strategies and appreciated the increased transparency provided through the SBAC process. Several respondents specifically supported the District's focus on improving organizational efficiency, rebuilding reserves, implementing FCMAT recommendations, and exploring long-term workforce planning strategies such as a Supplemental Employee Retirement Program (SERP).

At the same time, several recurring themes emerged through the survey responses. The most common concern involved the addition of new positions while the District continues to face structural budget deficits. Some respondents questioned whether reserve restoration should take precedence over certain staffing investments and expressed concern regarding the use of one-time funding sources to support positions that may require ongoing funding in future years. Respondents also encouraged the District to continue evaluating organizational structures, administrative costs, and potential operational efficiencies before considering reductions that could impact classroom instruction.

Several respondents also requested additional information regarding the assumptions supporting projected Fiscal Stabilization Plan savings. Specific areas identified included SERP-related savings projections, Special Education efficiencies, vacancy management savings, revenue enhancement opportunities, and long-term staffing alignment assumptions. Stakeholders expressed a desire for continued monitoring and public reporting to ensure projected savings are achieved and that contingency plans are developed if fiscal conditions change.

The District carefully considered this feedback when finalizing the Fiscal Stabilization Plan. Staff recognizes the importance of reserve restoration and long-term sustainability; however, the District also faces immediate operational and student service needs that require strategic investment. Accordingly, the Fiscal Stabilization Plan was intentionally designed as a balanced approach that preserves critical student services and organizational capacity while simultaneously reducing structural deficit spending and rebuilding reserves.

For example, positions funded through the Student Support and Professional Development Discretionary Block Grant are supported with one-time funding and therefore do not increase the District's ongoing unrestricted General Fund obligations at this time. These investments were made to strengthen Special Education oversight, preserve site-level leadership, improve student wellness supports, and address organizational needs identified through operational reviews. The District's long-term strategy is to evaluate ongoing funding opportunities through the Local Control and Accountability Plan (LCAP), Special Education operational efficiencies, categorical funding alignment, and other recurring revenue sources before the expiration of the one-time grant.

Additionally, in response to stakeholder concerns regarding savings assumptions, the Fiscal Stabilization Plan was developed using conservative forecasting methodologies. While annual stabilization targets total approximately $2.0 million in 2026-27, $9.0 million in 2027-28, and $9.5 million in 2028-29, reserve recovery projections assume only approximately 75% of projected savings are ultimately realized. This conservative approach reflects the District's recognition that not every strategy may be implemented exactly as projected and provides a more realistic estimate of future reserve growth.

The Fiscal Stabilization Plan prioritizes vacancy management, attrition, workforce restructuring, Special Education efficiencies, attendance improvement, operational improvements, revenue enhancement opportunities, and organizational alignment before considering more disruptive measures. This approach reflects the District's commitment to balancing fiscal responsibility with the preservation of educational programs, student services, and organizational stability.

District administration will continue to monitor implementation of the Fiscal Stabilization Plan, report progress through interim budget updates and future SBAC meetings, and make adjustments as necessary based on enrollment trends, State funding levels, actual savings achieved, and changing fiscal conditions.

Fiscal Impact:

As detailed in the updated Fiscal Stabilization Plan, the plan identifies annual stabilization targets of approximately $2.0 million in 2026-2027, $9.0 million in 2027-2028, and $9.5 million in 2028-2029. There is no immediate fiscal impact resulting from adoption of the resolution itself.

Recommendation:

Jason Hasty, Assistant Superintendent of Business Services, recommends that the Board of Education adopt Resolution 57 approving the updated Fiscal Stabilization Plan and implementation timeline for fiscal years 2026-2027 through 2028-2029, as presented.

RESOLUTION 57

RESOLUTION OF THE BOARD OF EDUCATION OF THE BURBANK UNIFIED SCHOOL DISTRICT APPROVING THE UPDATED FISCAL STABILIZATION PLAN AND IMPLEMENTATION TIMELINE FOR FISCAL YEARS 2026-2027 THROUGH 2028-2029

WHEREAS, in submitting the 2026-2027 Burbank Unified School District Adopted Budget, the Board of Education understands its fiduciary responsibility to maintain fiscal solvency for the current and subsequent two fiscal years pursuant to Education Code section 42127; and

WHEREAS, the District continues to face long-term structural budget challenges associated with declining enrollment, rising Special Education costs, increasing salary and benefit obligations, inflationary pressures, and ongoing operational demands; and

WHEREAS, the District's fiscal outlook improved between Second Interim and Budget Adoption due to favorable State budget actions, strategic expenditure management, and ongoing organizational improvement efforts; however, the Unrestricted General Fund continues to project an ongoing structural operating deficit; and

WHEREAS, the District has developed an updated Fiscal Stabilization Plan designed to reduce structural deficit spending, rebuild reserves, preserve educational programs, maintain organizational stability, and position the District for long-term financial sustainability; and

WHEREAS, the updated Fiscal Stabilization Plan includes annual stabilization targets of approximately $2.0 million in fiscal year 2026-2027, $9.0 million in fiscal year 2027-2028, and $9.5 million in fiscal year 2028-2029; and

WHEREAS, the District's reserve recovery projection conservatively assumes that approximately 75% of targeted savings are achieved, resulting in projected available reserves of approximately 7.6% in 2026-2027, 8.5% in 2027-2028, and 9.5% in 2028-2029; and

WHEREAS, while these actions are necessary to maintain the fiscal stability of the District, the Board of Education will continue to make every effort to sustain a high-quality educational program for students;

NOW, THEREFORE, BE IT RESOLVED, that the Board of Education of the Burbank Unified School District hereby approves the updated Fiscal Stabilization Plan and implementation timeline for fiscal years 2026-2027 through 2028-2029, as presented; and

BE IT FURTHER RESOLVED, that District staff is directed to continue monitoring the District's budget, enrollment, State funding, staffing levels, Special Education costs, attendance, revenue enhancement opportunities, and other fiscal conditions; and

BE IT FURTHER RESOLVED, that District staff shall provide updates to the Board of Education through the annual budget development process, interim reporting periods, and other budget updates as appropriate.

PASSED AND ADOPTED by the Board of Education of the Burbank Unified School District on this 25th day of June, 2026, by the following vote:

AYES: _____

NOES: _____

ABSENT: _____

ATTEST: _____

_____	_____
President of the Board of Education Burbank Unified School District	Clerk of the Board of Education Burbank Unified School District

Burbank Unified School District

Estimated Actuals/Budget Adoption (*Updated*) Fiscal Stabilization Plan

2026–2027

Executive Summary

Burbank Unified School District continues to implement a comprehensive Fiscal Stabilization Plan designed to address long-term structural budget challenges associated with declining enrollment, rising Special Education costs, increasing salary and benefit obligations, inflationary pressures, and ongoing operational demands. While these challenges remain, the District's fiscal outlook improved significantly between Second Interim and Budget Adoption due to favorable State budget actions, strategic expenditure management, and ongoing organizational improvement efforts.

Since the adoption of the District's Second Interim Budget, several positive fiscal developments have materially improved the District's near-term financial position. Most notably, the Governor's May Revision increased funding assumptions beyond those incorporated at Second Interim. The State increased the statutory COLA from 2.40% to 2.87% and provided an additional LCFF augmentation, resulting in an effective 4.31% increase to major LCFF funding components. Additionally, the May Revision included significant increases to Special Education funding, helping offset a portion of the District's growing unrestricted contribution to Special Education programs. Collectively, these State budget actions generated several million dollars of additional ongoing revenue and substantially improved the District's budget outlook.

The District also continues to benefit from strategic use of Redevelopment Agency (RDA) pass-through revenues. Pursuant to annual Board action, approximately $2.9 million in qualifying RDA revenues is being applied to offset a portion of the District's approximately $7.0 million Routine Restricted Maintenance Account requirement. This strategy reduces the unrestricted General Fund contribution otherwise required to satisfy the State's mandatory maintenance obligation and provides ongoing fiscal flexibility while preserving compliance with Education Code requirements.

As a result of these developments, combined General Fund deficit spending improved significantly from approximately $9.9 million in the 2025-26 Estimated Actuals to approximately $644 thousand in the 2026-27 Adopted Budget. While this represents substantial improvement in the District's overall fiscal position, the Unrestricted General Fund continues to project an ongoing structural operating deficit of approximately $3.8 million, underscoring the continued need for implementation of the Fiscal Stabilization Plan.

The District is also strategically utilizing one-time Student Support and Professional Development Discretionary Block Grant funding to ensure critical student support services and organizational improvements. These funds are supporting the addition of an Assistant Superintendent of Student Services and Special Education, two Wellness Counselors, and three Assistant Principal positions that otherwise would have been reduced effective July 1, 2026. These investments are intended to strengthen student services, improve Special Education

oversight, enhance site-level support, improve student wellness, and increase organizational capacity.

While these positions are initially supported through one-time funding, the District's long-term strategy is to align ongoing funding sources with student needs and program requirements. As the District's Unduplicated Pupil Percentage continues to increase, the District will evaluate revisions to the Local Control and Accountability Plan (LCAP) to ensure that contributing actions funded through Supplemental Grant resources appropriately support high-need student populations. The District also anticipates that improved Special Education leadership and oversight will generate operational efficiencies, reduce legal expenditures, improve compliance, decrease reliance on contracted services, and create long-term savings that help offset ongoing staffing costs. Additionally, the District will continue evaluating categorical and supplemental funding opportunities to support Assistant Principal and Wellness Counselor positions beyond the life of the one-time grant.

As part of its long-term workforce planning strategy, the District also intends to partner with Public Agency Retirement Services (PARS) to evaluate the feasibility of a Supplemental Employee Retirement Program (SERP). Given ongoing enrollment declines and an aging workforce, a voluntary retirement incentive may provide opportunities to reduce ongoing salary and benefit costs through attrition rather than layoffs. The District will evaluate potential participation rates, program costs, and long-term savings opportunities while carefully reviewing vacancies created through retirements to determine whether positions should be eliminated, consolidated, restructured, or strategically refilled based on enrollment-driven needs.

Despite these improvements, the District continues to face long-term structural challenges. Enrollment is projected to decline approximately 1.2% annually, and the Unrestricted General Fund continues to project operating deficits throughout the multiyear projection period. Accordingly, the Fiscal Stabilization Plan remains focused on achieving long-term fiscal sustainability through expenditure alignment, staffing adjustments tied to enrollment trends, Special Education cost containment, attendance improvement efforts, revenue enhancement strategies, implementation of FCMAT recommendations, workforce planning initiatives, and ongoing organizational improvements designed to strengthen internal controls, accountability, and operational efficiency.

The District remains committed to balancing fiscal responsibility with student needs while preserving educational programs, maintaining adequate reserves, strengthening organizational effectiveness, and positioning Burbank Unified School District for long-term financial sustainability.

Fiscal Stabilization Strategy and Long-Term Reserve Recovery Plan

While the District's fiscal position improved significantly between Second Interim and Budget Adoption, the underlying structural challenges that gave rise to the Fiscal Stabilization Plan remain. The Governor's May Revision, increased Special Education funding, strategic use of Redevelopment Agency pass-through revenues, and ongoing expenditure management efforts improved the District's short-term outlook and reduced projected deficit spending substantially. However, the Multiyear Projection continues to reflect ongoing unrestricted deficit spending and a declining unrestricted fund balance over the next three fiscal years.

The District's current reserve position remains above the State-required minimum and exceeds the Board's 6% reserve target in the budget year. Under the current adopted Multiyear Projection, available reserves are projected at approximately 6.9% in 2026-27, 5.0% in 2027-28, and 3.0% in 2028-29. However, implementation of the Fiscal Stabilization Plan is projected to increase available reserves to approximately 7.6%, 8.5%, and 9.5%, respectively, under the conservative assumption that approximately 75% of targeted savings are achieved. The District's long-term objective is not simply to maintain the statutory minimum reserve requirement, but to rebuild available reserves to up to approximately 10% (near the 10% cap) of expenditures and other financing uses while preserving educational programs and maintaining organizational stability.

Achieving this objective will require a combination of expenditure reductions, staffing alignment, revenue enhancement strategies, Special Education cost containment efforts, organizational efficiencies, and strategic workforce planning. The District's preferred approach is to maximize attrition, retirement incentives, vacancy management, and operational efficiencies before considering layoffs. As enrollment continues to decline, staffing levels must continue to align with student enrollment and program needs.

The District will continue pursuing opportunities to reduce Special Education expenditures through improved program oversight, reduced reliance on contracted services, enhanced compliance practices, and strengthened leadership. Additionally, the District will evaluate a Supplemental Employee Retirement Program (SERP) in partnership with Public Agency Retirement Services (PARS) as a potential tool to facilitate voluntary workforce reductions and generate ongoing salary and benefit savings. Revenue enhancement initiatives, including attendance improvement efforts, facility use optimization, updated developer fee revenues, and LCAP funding alignment, will further support the District's fiscal recovery efforts.

The following targets represent a conceptual fiscal stabilization framework designed to eliminate ongoing structural deficit spending and restore available reserves over the next three fiscal years.

Three-Year Fiscal Stabilization Targets

Fiscal Stabilization Strategy	2026-27	2027-28	2028-29
Staffing Reductions through Attrition and, if Necessary, Position Reductions	$0	$1,000,000	$1,000,000
SERP & Strategic Workforce Restructuring	$0	$3,000,000	$3,000,000
Hiring Freeze & Vacancy Control	$500,000	$750,000	$750,000
Special Education Cost Containment & Contract Reductions	$500,000	$1,500,000	$1,500,000
LCAP Funding Alignment & Categorical Maximization	$250,000	$1,000,000	$1,000,000
Administrative & Organizational Efficiencies	$250,000	$500,000	$500,000
Attendance Improvement & Revenue Enhancement	$250,000	$500,000	$750,000
Facility Use, Developer Fees & Revenue Strategies	$100,000	$250,000	$500,000
Operational, Utility & Contract Efficiencies	$150,000	$500,000	$500,000
Annual Stabilization Impact	**$2.0M**	**$9,000,000**	**$9,500,000**

Unrestricted Structural Deficit and Reserve Recovery

The table below applies the stabilization savings to the Unrestricted General Fund, showing the structural operating deficit before the plan and the operating result after the plan. Figures are shown on a conservative basis, assuming approximately 75% of the targeted savings are realized; up to approximately 10% remains the District's long-term goal.

Unrestricted General Fund	2026-27	2027-28	2028-29
Beginning fund balance	$19,816,627	$17,566,272	$19,958,335
Operating deficit, before plan	($3,750,355)	($4,357,937)	($4,471,144)
Stabilization actions realized (≈75% of target)	$1,500,000	$6,750,000	$7,125,000
Operating result, after plan	($2,250,355)	$2,392,063	$2,653,856
Ending fund balance	$17,566,272	$19,958,335	$22,612,191
Available reserves, % of expenditures	7.6%	8.5%	9.5%

Conservatively assumes approximately 75% of the targeted savings are realized. Reserve percentage = ending fund balance ÷ total expenditures and other financing uses (Form MYP): $232,505,244 / $235,333,986 / $238,778,545. At full (100%) realization, available reserves

would reach up to 10% (approximately $23,877,855) by 2028-29; the figures above reflect the more conservative 75% case.

Fiscal Stabilization Implementation Plan

The District's Multiyear Projection demonstrates that, while the District continues to meet the State-required 3% Reserve for Economic Uncertainties throughout the projection period, ongoing structural deficits would significantly reduce available reserves if corrective action is not taken. Absent implementation of the Fiscal Stabilization Plan, the current projection reflects unrestricted operating deficits of approximately $3.8 million in 2026-27, $4.4 million in 2027-28, and $4.5 million in 2028-29, resulting in a substantial decline in unrestricted fund balance and available reserves over the next three fiscal years.

To address these challenges, the District has developed a multi-year Fiscal Stabilization Implementation Plan designed to eliminate structural deficit spending, rebuild reserves, and position the District to achieve a long-term reserve target of up to approximately 10% of expenditures and other financing uses. The plan is built upon a balanced approach that prioritizes attrition, vacancy management, revenue enhancement, Special Education efficiencies, strategic workforce planning, and organizational improvements before considering more disruptive measures.

A significant component of the plan involves aligning staffing levels with enrollment trends. Enrollment is projected to decline approximately 1.2% annually, requiring the District to continually evaluate staffing ratios and organizational structures to ensure resources are deployed efficiently. The District will also evaluate the feasibility of implementing a Supplemental Employee Retirement Program (SERP) through Public Agency Retirement Services (PARS), which could generate significant ongoing savings through voluntary retirements and strategic workforce restructuring while minimizing the need for layoffs.

In addition, as noted above, the District will continue its Special Education cost-containment efforts. The District will also pursue opportunities to maximize categorical funding, align Local Control and Accountability Plan (LCAP) expenditures with increasing unduplicated pupil percentages, improve attendance, increase operational efficiencies, and identify additional revenue opportunities.

The following implementation timeline establishes key milestones and actions that will guide the District's fiscal stabilization efforts over the next three fiscal years. The timeline is intended to provide a structured framework for achieving identified budget reductions, monitoring progress, and making adjustments as enrollment, funding levels, and operational needs evolve.

Likewise, the accompanying Fiscal Stabilization Targets identify the estimated annual savings associated with each major initiative. These targets will be monitored and refined through the annual budget development process, interim reporting periods, and ongoing review by District administration and the Governing Board. Collectively, these actions are intended to restore

structural balance, strengthen reserve levels, preserve educational programs, and ensure the long-term financial sustainability of Burbank Unified School District.

Fiscal Stabilization Implementation Timeline (2026-27)

The 2026-27 fiscal year will focus on planning, evaluation, and implementation of the District's initial Fiscal Stabilization Plan actions. During this period, the District will conduct a comprehensive review of staffing, organizational structures, Special Education expenditures, contracted services, and categorical program funding to identify ongoing efficiencies and expenditure reductions. Key milestones include completion of a Supplemental Early Retirement Program (SERP) feasibility study, implementation of Special Education improvement initiatives, and alignment of staffing ratios with declining enrollment trends. These efforts are intended to establish the foundation for long-term fiscal sustainability while minimizing impacts to classroom instruction and student services. By Budget Adoption 2027, the District anticipates incorporating the first phase of recurring expenditure reductions and revenue enhancements into the 2027-28 budget.

Timeline	Action Item	Estimated Impact
Summer/Fall 2026	Update/Enact Fiscal Stabilization Plan and establish annual reduction targets	Foundation
Summer/Fall 2026	Launch PARS SERP Feasibility Study	Identify potential $3M annual savings opportunity
Summer/Fall 2026	Review all vacant positions prior to replacement	$500,000 in 2026-27; $750,000 annually beginning in 2027-28
Fall 2026	Develop staffing ratios aligned to enrollment trends	Supports $1,000,000 staffing reduction target beginning in 2027-28
Fall 2026	Review Special Education staffing and contracted services	$250K-$1.0M
Fall 2026	Review all contributing actions within the LCAP	Funding realignment
Fall 2026	Implement Assistant Superintendent Special Education improvement plan and monitor savings	$1.5M
December 2026	Complete organizational review of central office and site administration	$250,000 in 2026-27; $500,000 annually
Before First Interim 2026-27	Present recommended SERP implementation plan	$3M in 27-28
January 2027	Identify 2027-28 staffing reductions through attrition and enrollment alignment	$1M target

Timeline	Action Item	Estimated Impact
Budget Adoption 2027	Adopt 2027-28 budget reflecting staffing reductions and approved stabilization actions	Approximately $9M annual stabilization impact

Fiscal Stabilization Implementation Timeline (2027-28 Through 2028-29)

The second phase of the Fiscal Stabilization Plan focuses on full implementation and long-term sustainability. Building upon the work completed during 2026-27, the District will continue aligning staffing levels with enrollment trends, implement approved workforce restructuring strategies, and pursue additional operational efficiencies. Annual monitoring of revenues, expenditures, enrollment, attendance, and staffing ratios will ensure the District remains responsive to changing fiscal conditions. By Budget Adoption 2028, the District expects to have fully implemented the major components of the Fiscal Stabilization Plan, resulting in recurring annual savings sufficient to reduce structural deficit spending and support restoration of reserves toward the Board's long-term goal of maintaining a minimum 10% reserve level.

Timeline	Action Item	Estimated Impact
Fall 2027	Continue staffing alignment review based on enrollment trends	Staffing alignment
December 2027	Identify additional staffing reductions and organizational adjustments needed for 2028-29	Additional $1M target
Budget Adoption 2028	Adopt 2028-29 budget reflecting full implementation of stabilization strategies	Sustained $9.5M annual impact
2028-29 School Year	Begin reserve rebuilding phase and maintain structural balance	Up to approximately 10% reserve goal

Burbank Unified School District
Fiscal Services

REPORT TO THE BOARD

TO:	Members of the Board of Education
FROM:	Jason Hasty, Assistant Superintendent, Administrative Services
PREPARED BY:	Maricela Salinas, Director, Fiscal Services
SUBMITTED BY:	Cheretta Wade, Administrative Secretary II
DATE:	June 25, 2026
SUBJECT58	Adoption of Resolution 58 Authorizing Temporary Transfers from the School Pools Fund Maintained by the Los Angeles County Treasurer 2026-2027

Background:
Temporary borrowing of cash from the Treasurer in the event of cash deficiencies allows for borrowing from the School Pools Fund maintained by the Los Angeles County Treasurer as permitted in Article XVI, Section 6, of the California Constitution. Temporary borrowing of cash from the Treasurer in the event of cash deficiencies is available through the last Monday of April.

Discussion/Issues:
The Treasurer cannot loan districts money after the aforementioned Monday and districts must be cash self-sufficient from that point on until the end of the year. Tax and Revenue Anticipation Notes (TRANs) repayment amounts must be set aside before borrowing from the Treasurer is permitted.

The temporary borrowing from the Treasurer may be made under the following restrictions:

- No more than 85% of the anticipated revenues accruing to the school district may be borrowed.
- Borrowing may not be made prior to the first day of the fiscal year nor after the last Monday in April of the current fiscal year.
- Repayment from the revenues accruing to the school district shall be made before any other obligation is met from such revenue.

Fiscal Impact: (if any)
There is no fiscal impact in adopting this resolution.

Recommendation:
Jason Hasty, Assistant Superintendent, Administrative Services, recommends that the Board of Education adopt Resolution 58 Authorizing Temporary Transfers from the School Pools Fund Maintained by the Los Angeles County Treasurer 2026-2027 as permitted in Article XVI, Section 6, of the California Constitution, as presented.

BEFORE THE GOVERNING BOARD OF THE BURBANK UNIFIED SCHOOL DISTRICT
COUNTY OF LOS ANGELES, STATE OF CALIFORNIA

RESOLUTION # 58

RESOLUTION OF THE BOARD OF TRUSTEES OF THE BURBANK UNIFIED SCHOOL DISTRICTAPPROVING TEMPORARY TRANSFERS FROM THE SCHOOL POOLS FUND MAINTAINED BY THE LOS ANGELES COUNTY TREASURER

WHEREAS, sufficient cash is needed to pay obligations for current operating requirements lawfully incurred in the fiscal year, and;

WHEREAS, Article XVI, Section 6 of the California Constitution allows for borrowing from the School Pools Fund maintained by the Los Angeles County Treasurer (Treasurer), and;

WHEREAS, the following restrictions apply to this authorization:

1. Maximum amount of authorized borrowing: $5,000,000
2. For Fiscal Year: 2026-27
3. Shall not exceed 85 percent of the anticipated revenues accruing to the District
4. Shall not be made prior to the first day of the fiscal year nor after the last Monday in April of the current fiscal year
5. Shall be repaid from revenues accruing to the District before any other obligation of the District is met from such revenue.

NOW, THEREFORE, BE IT RESOLVED, that the Governing Board of the Burbank Unified School District hereby authorizes the Treasurer to make temporary transfer of funds.

MOTION MADE BY _____

With a second by_____.

VOTE: _____Aye _____No _____Abstain

_____
Abby Pontzer Kamkar, President, Governing Board
of the Burbank Unified School District

I, Oscar Macias, Interim Superintendent and Secretary to the Governing Board of the Burbank Unified School District of Los Angeles County, California, do hereby certify that the foregoing is a full, true and correct copy of a Resolution duly adopted by said Board at the scheduled meeting thereof, at the time and place and by the vote above stated, which Resolution is on file and of record in the office of said Board.

_____

Oscar Macias, Secretary, Governing Board
of the Burbank Unified School District

Burbank Unified School District
Fiscal Services

REPORT TO THE BOARD

TO:	Members of the Board of Education
FROM:	Jason Hasty, Assistant Superintendent, Business Services
PREPARED BY:	Maricela Salinas, Director, Fiscal Services
SUBMITTED BY:	Cheretta Wade, Administrative Secretary II
DATE:	June 25, 2026
SUBJECT:	Adoption of Resolution 59 Authorizing Temporary Inter-Fund Cash Borrowing 2026-2027

Background:
Education code 42603 permits the temporary borrowing of moneys between District funds to facilitate the payment of obligations. This allows the District to cover a temporary negative cash flow balance amounts in any and all District funds, but does not increase the total amount authorized for expenditures nor is it considered income to the borrowing fund.

Discussion/Issues:
Inter-fund loans are set up in various District funds to reflect short-term loans between funds for cash flow purposes and the making and repayment of inter-fund loans must be approved by the Governing Board.

In accordance with Education Code Section 42603, temporary borrowing of cash up to 75% of the fund balance between funds prior to March 3, 2027, must be repaid by June 30, 2027. Temporary borrowing of cash up to 75% of the fund balance between funds from March 3, 2027, through June 30, 2027, shall be repaid in the same fiscal year or in the following fiscal year.

Fiscal Impact: (if any)
None

Recommendation:
Jason Hasty, Assistant Superintendent, Administrative Services, recommends that the Board of Education adopt Resolution 59 Authorizing Temporary Inter-Fund Cash Borrowing transfers up to 75% of the fund balances of the District for the 2026-2027 payment obligations as permitted in Education Code 42603, as presented.

CASH BORROWING RESOLUTION

Temporary Interfund Cash Borrowing

Burbank Unified School District

WHEREAS, sufficient cash is needed to pay obligations for current operating requirements lawfully incurred in the fiscal year, and;

WHEREAS, temporary transfer of cash between district funds is permitted by Education Code Section 42603, and;

WHEREAS, the following restrictions apply to this authorization:

1. Maximum amount of authorized borrowing: $ 15,000,000.
2. For fiscal year: 2026-2027.
3. Amount shall not exceed 75% of any moneys held in any fund.
4. Funds borrowed shall not be available for appropriation nor considered income to the borrowing fund.
5. Borrowing shall occur only when the fund receiving the money will earn sufficient income during the current fiscal year.
6. The amounts borrowed shall be **repaid** either in the same or following fiscal year if the borrowing takes place within the final 120 calendar days of a fiscal year.

NOW, THEREFORE, BE IT RESOLVED, that the governing board of the Burbank Unified School District hereby authorizes the borrowing of cash between all of the district funds.

Certification of the Clerk of the Governing Board

The agenda listing this item for action was posted as required by law.

The resolution was adopted by the Governing Board on _____
Date

Signature: _____
Clerk of the Governing Board

Attachment No. 2
Info Bul. No. 6981
SFS-A53-2024-2025

BEFORE THE GOVERNING BOARD OF THE
UNIFIED SCHOOL DISTRICT
COUNTY OF LOS ANGELES, STATE OF CALIFORNIA

RESOLUTION NO. 60

AUTHORIZATION FOR INTERFUND TRANSFERS FOR 2026-27

WHEREAS, the Board of Education for the Burbank Unified School District has included interfund transfers as part of their approved budget(s) to allow specific contributions between funds for the 26-27 fiscal year; and

WHEREAS, a formal board resolution is required by the Los Angeles County Office of Education to execute the actual transfer;

NOW, THEREFORE BE IT RESOLVED and ordered that the Burbank Board of Education does hereby authorize the transfers required for the 2026-27 fiscal year;

The motion was made by _____ with the second by

_____ on the 25th day of August 2026.

Vote: _____ Aye _____ No _____ Abstain

_____

President, Governing Board
of the Burbank Unified School District

I, Oscar Macias, Interim Superintendent and Secretary to the Governing Board of the Burbank Unified School District of Los Angeles County, California, do hereby certify that the foregoing is a full, true and correct copy of a Resolution duly adopted by said Board at the scheduled meeting thereof, at the time and place and by the vote above stated, which Resolution is on file and of record in the office of said Board.

_____

District Superintendent/Secretary to the Board of
the Burbank Unified School District

BEFORE THE GOVERNING BOARD OF THE BURBANK UNIFIED SCHOOL DISTRICT COUNTY OF LOS ANGELES, STATE OF CALIFORNIA

Resolution #61

DELEGATION OF ADMINISTRATIVE AUTHORITY TO PROCESS ROUTINE BUDGET REVISIONS, ADJUSTMENTS AND TRANSFERS

WHEREAS, the Board of Education for the Burbank Unified School District authorizes the Superintendent of Schools or his delegate to make such routine budget revisions, adjustments and transfers as necessary for the payment of District obligations and to effect technical adjustments of the board adopted budget during the 2026-27 fiscal year, in accordance with the provisions of this resolution.

WHEREAS, this resolution is adopted for the purpose of expediting the processing of routine budget revisions, adjustments and transfers and shall remain in effect for a period of one year, from July 1, 2026 to June 30, 2027, and is subject to annual review and renewal by duly adopted resolution of the Board of Education for the Burbank Unified School District.

WHEREAS, a summary report of budget revisions, adjustments, and transfers approved and processed by the Superintendent in accordance with this resolution, listed by major objects and funds, transaction numbers, dates, and amounts shall be submitted to the Board for adoption/ratification, not less than three times annually (by October 31, January 31, and June 30) with the District's First Interim, Second Interim, and in conjunction with the annual close of the District's financial records and Unaudited Actuals Reports,

WHEREAS, all budget adjustments and transfers must be made in accordance with the provisions of Education Code Sections 42600, 42601, 42602, 42603, and 42610, and processed using the appropriate forms and documentation as provided by the County Office, and in compliance with applicable district guidelines.

The foregoing Resolution was adopted by the Governing Board of the Burbank Unified School District on the 25th day of June, 2026 by the following vote:

AYES: _____ NOES: _____ ABSENT: _____

_____

Abby Pontzer Kamkar, President, Governing Board
of the Burbank Unified School District

I, _____, Superintendent and Secretary to the Governing Board of the _____ School District of Los Angeles County, California, do hereby certify that the foregoing is a full, true and correct copy of a Resolution duly adopted by said Board at the scheduled meeting thereof, at the time and place and by the vote above stated, which Resolution is on file and of record in the office of said Board.

_____

_____, Secretary, Governing Board
of the _____ School District

BURBANK UNIFIED SCHOOL DISTRICT
Business Services

REPORT TO THE BOARD

TO:	Members of the Board of Education
FROM :	Jason Hasty, Assistant Superintendent of Business Services
PREPARED BY:	Robin Rickman, Project Manager
SUBMITTED BY:	Megan Burkhart, Facilities Operations Construction Technician
DATE:	June 25, 2026
SUBJECT:	Approval of Professional Services Agreement with Mollenhauer Group for Topographic Survey and GPR Utility Detection Services for the Pool Storage Building and Shade Structure at Burbank High School (Measure ABC Bond Fund)

Background:

Burbank Unified School District previously engaged Flewelling & Moody in 2023 to prepare design concepts to connect the Pool Storage Building and Shade Structure as part of the Aquatic Pool Modernization project. While the design was completed, the scope was not funded in 2024.

In 2026, the Pool Storage Building and Shade Structure project was funded through the Measure ABC Bond Program, allowing the District to move forward with this portion of the work.

Discussion/Issues:

The original 2023 design did not include District-provided topographic surveying or ground-penetrating radar utility detection services. These services are necessary to verify existing site conditions, confirm grade elevations, support excavation planning, and identify underground utilities and conduits. Incorporating these services will help reduce the risk of unforeseen conditions during construction and improve overall project coordination.

The project is currently advancing through the preparation of a Division of the State Architect Bid Addendum for construction anticipated in 2027.

On May 21, 2026, the Board of Education approved a list of selected firms, consisting of eleven firms, for on-call Civil Engineering Services and Land Surveying Services. The District requested a proposal from Mollenhauer Group.

On May 29, 2026, Mollenhauer Group submitted a proposal in the amount of $8,500.00 to provide civil engineering services, specifically topographic survey and GPR utility detection services, at Burbank High School in accordance with the District's Master Contract Agreement.

Financial Impact:

The total cost of the agreement is not to exceed $8,500.00 (Measure ABC Bond Fund)

Recommendation:

Jason Hasty, Assistant Superintendent of Business Services, recommends that the Board of Education approve the proposal from Mollenhauer Group for topographic survey and GPR utility detection services for the Pool Storage Building and Shade Structure at Burbank High School, not to exceed $8,500.00

(Measure ABC Bond Funds), and that authority to sign the agreement be exercised pursuant to BUSD – AR 3314, as presented.

Map 29, 2026

Ms. Robin Rickman
Project Manager - Facilities
District Service Center
510 S Shelton Street
Burbank, CA 91506

Via Email: RobinRickman@burbankusd.org
Phone: 818 729-3491
Cell: 213 503-6711
MG Proposal #: **P26.120.025**

Subject: **Topographic and GPR Utility Detection for**

Burbank High School Pool Building
902 N. 3rd Street , Burbank, CA

Ms. Rickman:

Mollenhauer Group is pleased to offer our cost proposal in reference to your RFP dated May 21, 2026 and our site visit with Mr. Thomas Tran from our office.

Scope of Services:

Limit of Survey based on Exhibit A

Topographic Survey

Set a minimum of four (4) survey control monuments for future construction.

Include legend of symbols and abbreviations.

Show north arrow and locate north to the top of page.

Locate all physical improvements within the site defined by Exhibit A and walkways to include buildings, stairs. lights, vaults, surface utilities, curbs, gutters, trees, lights, vaults, power poles, parking areas and striping, etc.

Provide spot elevations and 1/2-foot contours across the site for architectural design purposes.

Spot elevations on hard surfaces shall be to the nearest 0.01'; spot elevations on other surfaces shall be to the nearest 0.10'.

Show flowlines of all swales, gutters, etc.

Elevations will be based upon Bench Mark provided from Client from record drawings.

Finish floor elevations for building entrances if applicable.
Provide existing buildings with finished floor at all entries and building corners.

Show all utility meters, tanks, valves, hydrants, vaults, pull boxes, etc. Items shall be drawn to scale.

Private Utilities - provide above and below grade utilities based upon surface information and client supplied record documents. Include location, size and depth. Field obtain accessible inverts for all gravity lines at catch basins, manholes, and cleanouts and include direction of flow.

Underground Utility Detection Services within the project limits using electro-magnetic and ground penetrating radar equipment to locate the depth & direction of all conductive and non-conductive utilities including: sewer lines, storm drain lines, fire service lines, water lines, electrical lines, tele-communication lines and natural gas lines. All located utilities will be delineated with APWA color-coded marking paint, chalk and/or flags and identified on the survey.
Survey the utility lines with depths and draft onto the survey/

Locate light poles.

Provide summary table identifying utility purveyors if available.

Location of overhead electrical & telephone and communication utilities lines.

Architectural survey to be prepared at a suitable architectural scale on a 24"x36" sheet.

Drawings shall note all dimensions and elevations in 1"=10'.
CAD layers shall be appropriately separated and named.

Survey shall be signed and sealed by a California Licensed Land Surveyor

Delivery Date:

Depending on your authorization to proceed, Mollenhauer will deliver the survey in 2 1/2 weeks from the date the signed proposal is received. Any modification to this timing will be agreed upon by both parties.

Proposal Fee:

1.	Topographic Survey	Fixed fee in the amount of **$ 6,000.00**
2.	GPR & Survey	Fixed fee in the amount of **$ 2,500.00**
		TOTAL: $ 8,500.00

Additional services that may be required will not be performed without written authorization from client.

This proposal is valid for 30 days. To authorize us to proceed with this scope of services, please review the attached terms and conditions, sign and date this proposal, and return via e-mail at ghindson@mollenhauergroup.com Should you have any questions, please do not hesitate to contact us for clarification. Thank you for the opportunity to propose on this project.

Billing:

1. Invoices will be billed upon issuance of the deliverables.
2. Cost for blueprints, reproductions, governmental records, governmental fees, overnight mailing, and other miscellaneous expenses are excluded in this contract.

We hope this proposal meets with your approval. Mollenhauer Group has the ability, expertise, and resources to complete this project on time and as described.

Sincerely,
Mollenhauer Group Civil, Inc.



Gregory D. Hindson, PLS
President
Exhibit A

N. GLENOAKS BLVD.

DELAWARE RD.

HARVARD AVE.

(E) BASEBALL FIELD

OUTDOOR TRACK AND FIELD

Site

GRASS PLAYFIELD

HARD COURTS

PARKING

QUAD

LUNCH SHELTER

LOUNGE

KITCHEN

MULTI-PURPOSE 1-107

1-166

LOWER COURTYARD

LIBRARY 1-147

ADMINISTRATION BLDG.1

1-137

TENNIS COURTS

PARKING GARAGE BELOW

TENNIS COURTS

PARKING GARAGE BELOW

BUILDING 3

GYMNASIUM 3-101

GYMNASIUM 3-102

LOBBY

OUTDOOR SWIMMING POOL

AUDITORIUM BLDG.2

STAGE 2-110

WR

2-113 BAND ROOM

STAFF LOUNGE

2-107 CR

2-101 CR

2-109

2-134 CR

2-132 CR

2-135 CR

2-133 CR

2-131 CR

2-129 CR

2-125 CR

2-123 CR

2-121

2-117 CR

2-118 CR

2-116 ELECT.

3-107

3-108

3-112

3-115

3-110A BOYS LOCK-ER

3-313 GIRLS LOCK-ER

3-109

3-122

3-123

3-124

3-125

1-161 CR

1-162 CR

1-160 CR

1-158 CR

1-157 CR

1-156 CR

1-155 CR

1-159 CR

1-148 CR

1-149 CR

1-138 CR

1-139 CR

1-140 CR

1-141 CR

1-142 CR

1-143 CR

1-144 CR

1-145 CR

BOOK ROOM

STAIRS

ELEV.

N. 3RD ST.

BLDG.1 - SEE 2ND PAGE

LEGEND:

- MAIN INGRESS
- MAIN WATER SHUT OFF
- MAIN GAS SHUT OFF
- MAIN ELECTRICAL
- MAIN FIRE ALARM PANEL
- VEHICULAR GATES
- PEDESTRIAN GATES
- FIRE EXTINGUISHER
- FIRE ALARM PULL STATION
- DISASTER BIN

NOTE:

* INFORMATION SHOWN ON SAFETY MAPS WAS OBTAINED FROM DISTRICT RECORD DRAWINGS

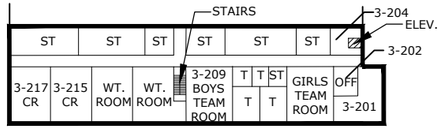

BLDG.1 - 2ND FLOOR

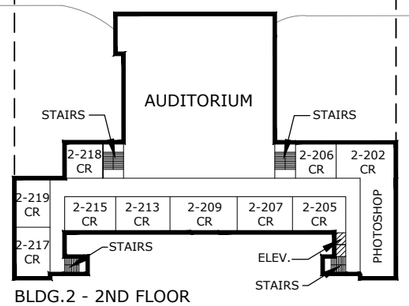

BLDG.2 - 2ND FLOOR

Exhibit A

N

BUILDING FACILITIES

SITE DIAGRAM: BURBANK HIGH SCHOOL

ADDRESS: 902 N 3RD STREET, BURBANK, CA. 91502

SCHOOL DISTRICT: BURBANK UNIFIED SCHOOL DISTRICT

DATE: JANUARY 14, 2019

BURBANK UNIFIED SCHOOL DISTRICT
Equity and Excellence

BURBANK UNIFIED SCHOOL DISTRICT
Business Services

REPORT TO THE BOARD

TO:	Members of the Board of Education
FROM :	Jason Hasty, Assistant Superintendent of Business Services
PREPARED BY:	Malihe Shokouhi, Project Manager
SUBMITTED BY:	Megan Burkhart, Facilities Operations Construction Technician
DATE:	June 25, 2026
SUBJECT:	Approval of Contract, SVA Architects, Design Services, Secure Entry, ADA, and Play Equipment Project, Emerson Elementary School (Measure ABC Bond Fund)

Background:
SVA Architects is one of the firms previously approved by the Board of Education to provide architectural services to the District. The proposed project at Ralph Emerson Elementary School supports the District's ongoing efforts to enhance campus safety, security, and accessibility.

The project scope includes the demolition of the aging Around-the-Bell (ATB) building to accommodate a redesigned student drop-off and pick-up area, as well as the relocation of the administration office and main school entry to establish a controlled, single point of access during school hours. Additional improvements include upgrades to campus fencing, guardrails, and play areas; modernization of restrooms, ramps, doors, and parking areas to meet ADA requirements; installation of shade structures incorporating solar panels; and replacement of the upper playground with new surfacing, drainage, and equipment.

The scope of services also includes full design and construction administration through Division of the State Architect (DSA) approval, bidding, and project closeout. Supporting work includes topographic survey, underground utility documentation, and Stormwater Pollution Prevention Plan (SWPPP) compliance.

Fiscal Impact:
The total cost for design and construction administration services is not to exceed $598,800**,** to be funded through the (Measure ABC Bond Fund).

Recommendation:
Jason Hasty, Assistant Superintendent of Business Services, recommends that the Board of Education approve the proposal from SVA Architects for design and construction administration services for the Secure Entry, ADA, and Play Equipment Project at Ralph Emerson Elementary School, not to exceed $598,800 (Measure ABC Bond Funds), and that authority to sign the agreement be exercised pursuant to BUSD – AR 3314, as presented.

Santa Ana + Pleasanton + San Diego + Davis + Honolulu

SVA Architects, Inc.

6 Hutton Centre Drive, Suite 1150
Santa Ana, California 92707
T 949.809.3380

info@sva-architects.com
www.sva-architects.com

June 4, 2026 – Revised

Malihe Shokouhi, Project Manager
Burbank Unified School District
1900 W. Olive Avenue
Burbank, CA 91501

Via Email: maliheshokouhi@burbankusd.org

Re: Revised Proposal for Architectural and Engineering Services for Ralph Emerson Elementary School Located in Burbank, California

Dear Ms. Shokouhi:

Thank you very much for the opportunity to submit this proposal. Based on site visits on February 20, 2026, May 8, 2026, and June 3, 2026, with you, below is our understanding of the project, our proposed services, and our fees for your review.

This Letter of Understanding ("LOU") shall serve as confirmation between **Burbank Unified School District** ("Client" or District") and **SVA Architects, Inc.** ("SVA" or "Architect"), of our mutual understanding of the work to be performed for **Ralph Emerson Elementary School** ("Project") located at 720 E. Cypress Avenue, Burbank, California 91501.

I. Scope of Work

A. Demolition

- Demolish the existing After-the-Bell (ATB) campus.

B. Site Security

- Relocate administration and principal's office to Building 5 to ensure an ADA compliant, secure and access controlled single point of entry to the campus during school hours.
- Construct a new campus entry and ADA compliant Path-of-Travel from the new parking lot.
- Provide visual screening and protection for the classroom and library doors that open to the covered, semi-secure walkway along E. Cypress Avenue.
- Construct a new trash enclosure in the parking lot with direct and secure access from the interior of the campus.
- Add new decorative fencing at the new parking lot and provide new vehicular swing gates at two driveways.

C. Safety

- Replace existing play structure at upper playground with a new age-appropriate apparatus including new fall protection material consisting of an all-weather poured in place material that meets ADA accessibility requirements.
- Provide drainage for the all-weather poured in place material at the new play structure at the upper playground.
- Construct a new PC-Approved Shade Structure over the new play structure on upper playground.
- Replace guardrails at upper playground landing and ramps with code compliant picket spacing.
- Replace existing fencing between playground and lunch shelter area with 1" diamond non-climbable chain link fencing or alternative material/system at lower playground.
- Replace existing perimeter fencing around entire site.
- Provide a safe dispersal area with lighting on the upper field.
- Provide lighting at the existing lunch shelter at the lower playground.

D. ADA Accessibility

- Develop a new accessible entry to existing campus entry from public right-of-way on E. Cypress Avenue. Maintain architectural elements at entrance and doorway to campus.
- Assess and verify existing restrooms for ADA compliance and identify all non-compliant fixtures and accessories to be replaced and installed to meet ADA requirements.
- Upgrade all door and gate hardware along the accessible P.O.T.
- Replace existing ramps that are not ADA compliant on the accessible P.O.T.
- Provide new ADA Accessible Parking Spaces in the new parking lot and construct an ADA accessible path of travel to relocated campus entry.

E. Additional Scope/Improvements

- Grade and construct a new parking lot with a student drop-off and pick-up parking area on the area that includes the site of demolished ATB building.
- Provide a new 8'-0" wide and ADA accessible ramp that connects the lower playground to the upper playground in addition to the existing accessible P.O.T. provided by the existing elevator.
- Provide a new modular two-classroom building (48'x40') for After-the-Bell program in the southeast corner of the existing parking lot.
- Reconfigure parking lot to accommodate new modular classroom building and relocate fencing to secure campus from parking lot.
- Construct two new solar canopy structures at new parking lot to meet CalGreen requirements for shaded parking areas.

II. Scope of Services

A. SVA will serve as the Architect, and our team will provide design, engineering, and construction administration services for the following disciplines:

- Architectural and Interior Design – SVA Architects
- Structural Engineering – VCA Engineers
- Civil Engineering – VCA Engineers
- Mechanical, Electrical, and Plumbing Engineering – WSP
- Landscape Design – Architerra Design Group
- Cost Estimating – Sierra West Consulting Group

B. Our team will provide services for the following key project phases.

1. Pre-Design and Programming Phase
   a. Evaluate existing conditions
   b. Confirm with stakeholders their required program and expectations
   c. Develop multiple conceptual design options

2. Schematic Design (SD) Phase
   a. Finetune chosen design and develop schematic-level drawings
   b. Select interiors materials and finishes
   c. Provide SD cost estimate

3. Design Development (DD) Phase
   a. Develop Design Development drawings
   b. Develop project specifications
   c. Confirm all required engineering systems

4. Construction Documents (CD) Phase
   a. Develop 100% Construction Documents
   b. Update Cost Estimate

5. DSA Submittal, Review, and Approval
   a. Complete DSA documentation
   b. Work with DSA to obtain approval of all construction documents

6. Bid Phase
   a. Provide bidding documents to District
   b. Support bid process: conduct site walk, answer RFIs, provide addenda, etc.

7. Construction Administration

a. Attend construction progress meetings
b. Provide site observation reports
c. Review and respond to RFI's and Submittals
d. Complete all DSA closeout procedures

III. Compensation

A. The Client agrees to compensate Architect, in accordance with the terms and conditions of this Agreement, for services rendered hereunder of a fee equal to **Five Hundred Twenty-Seven Thousand Dollars ($527,000.00)** as summarized below.

Discipline	Fees
Architectural – SVA Architects	$270,625.00
Structural – VCA Engineers	$20,000.00
Civil – VCA Engineers	$102,000.00
MEP/LV – WSP	$75,500.00
Landscape – Architerra Design Group	$46,875.00
Cost Estimating – Sierra West Consulting Group	$12,000.00
Total	**$527,000.00**

Additional Services (total not included above):	
Topographical Survey – VCA Engineers	$58,000.00
Stormwater Pollution Prevention Plan (SWPPP) – VCA Engineers	$13,800.00

B. Payment to SVA will be made monthly in proportion to services performed.

C. Reimbursement for any direct expenses will be at 1.15 times the actual expense. Reimbursable expenses will include printing or reproduction costs requested by Client or Agency (in-house printing is excluded), renderings (if requested by Client), and delivery and messenger services.

D. SVA's hourly rates are as follows:

Partner	$275.00	Project Designer	$195.00
Principal	$250.00	Job Captain	$175.00
Senior Project Architect/Manager	$215.00	Intermediate Technical Designer	$140.00
Senior Project Designer	$215.00	Junior Technical Designer	$115.00
Project Architect/Manager	$195.00	Administrative Staff	$85.00

IV. Architect's Practice Act

Architects are licensed and regulated by the California Architects Board located at 2420 Del Paso Road, Suite 105, Sacramento, California 95834.

If the above is agreeable and consistent with our mutual understanding, please sign one original of this Letter of Understanding and return it to us as soon as possible. Please note that the requirements of Section 5536.22 of the Business and Professions Code of the state of California require an executed written agreement by both parties prior to proceeding with any work.

The attached terms and conditions are hereby fully referenced and incorporated.

Please advise if you have any questions or concerns, SVA will be happy to further discuss this proposal with you.

Sincerely,

SVA Architects, Inc.

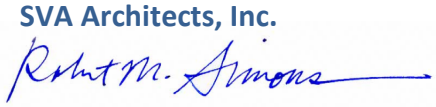

Robert M. Simons, AIA
Partner and President

AGREED and ACCEPTED:

Burbank Unified School District

_____
Signature

_____
Name and Title

_____
Date

Attachments: Terms and Conditions
Project Schedule

TERMS & CONDITIONS

A. Standard of Care: Architect shall not be responsible for the performance of the construction contract(s) or contract documents, project site safety, work or products, coordination, or any defects, deficiencies of effects resulting therefrom, by any design/builder, contractor, manufacturer, supplier, fabricator, consultant retained by design/builder, or any other third party (including anyone working or acting on behalf of any of them) except to the extent directly arising out of Architect's sole negligent acts, errors or omissions or willful acts.

B. Additional Services: All work requested by Client that is outside of the Work described hereunder, shall be compensated to Architect on an hourly basis at the rates described herein.

C. Revisions to the drawings or changes in the Work that are required as a result of: (1) unforeseen changes in construction; (2) the enactment of changes to applicable laws or building codes; (3) alterations requested by Client that are inconsistent with previous decisions or approvals, including revisions made necessary from changes in Client's program or budget; (4) Client's failure to render decisions in a timely manner; (5) any other circumstance beyond the control of Architect; or (6) changes in interpretation by any governing agency shall be billed as an additional service if Architect demonstrates to Client that an increase in Architect's cost has been incurred.

D. Ownership of Documents: Any and all documents prepared as a result of the Services are and shall remain the property of Architect.

E. Termination: Either party may terminate this Agreement on seven (7) days' written notice, provided only that such notice is based upon a good faith belief that the other party has materially breached this Agreement through no fault of the party initiating the termination.

F. Limitation of Liability: Notwithstanding anything to the contrary set forth herein, it is hereby agreed, with respect to any claims and liability of Architect, that:

- The sole and exclusive remedy shall be against Architect and its corporate assets;
- No officer, director or shareholder of Architect shall be sued of named as a party in any suit or action;
- No judgment shall be taken against any officer, director or shareholder of Architect;
- No writ of execution will ever be levied against the assets of any officer, director, or shareholder of Architect; and
- The covenants and agreements contained in this section are enforceable by Architect and by any of Architect's officers, directors, or shareholders.

G. No Third-Party Beneficiaries: There shall be no third-party beneficiaries to this Agreement.

H. Force Majeure: Any prevention, delay or stoppage of work due to strikes, lockouts, labor disputes, acts of God, acts of war, terrorist acts, inability to obtain services, labor, or materials or reasonable substitutes thereof, governmental actions, civil commotions, declared state of emergency, or government issued health orders related to contagious illness, fire or other casualty, and other causes beyond the reasonable control of Architect obligated to perform, with respect to the obligations imposed with regard to Scope of Work pursuant to this Agreement (collectively, a "Force Majeure"). Notwithstanding anything to the contrary contained in this Agreement, Client shall excuse the performance of such work by Architect for a period equal to any such prevention, delay, or stoppage and, therefore, if this Agreement specifies a time period for performance of an obligation of either party, that time period shall be extended by the period of any delay in such party's performance caused by force majeure.

EMERSON ELEMENTARY SCHOOL - BURBANK UNIFIED SCHOOL DISTRICT

SVA Architects

ID	Task Mode	Task Name	Duration	Start	Finish	Predecessors
1		**Design**	**353 days**	**Mon 6/1/26**	**Wed 10/6/27**	
2		**Pre-Design/Programming**	**10 days**	**Mon 6/1/26**	**Fri 6/12/26**	
3		Site visit/investigation with Consultant Team	1 day	Mon 6/1/26	Mon 6/1/26	
5		Stakeholder Meetings/Conceptual layouts	10 days	Mon 6/1/26	Fri 6/12/26	
4		As-built site review/ utilities	3 days	Tue 6/2/26	Thu 6/4/26	
6		**Schematic Design Phase**	**60 days**	**Mon 6/15/26**	**Fri 9/4/26**	
8		Prepare SD Plans	45 days	Mon 6/15/26	Fri 8/14/26	
7		Campus / District Meetings	2 days	Wed 6/17/26	Thu 6/18/26	
9		SD Submittal to District	0 days	Fri 7/31/26	Fri 7/31/26	8
10		BUSD Review and Comments	10 days	Mon 8/3/26	Fri 8/14/26	9
11		Cost Estimate Preparation	10 days	Mon 8/3/26	Fri 8/14/26	8
12		Final SD Package with Estimate	0 days	Fri 8/14/26	Fri 8/14/26	11
13		BUSD Review of Estimate	15 days	Mon 8/17/26	Fri 9/4/26	12
14		SD Approval and NTP to DD Phase	0 days	Fri 9/4/26	Fri 9/4/26	
15		**Design Development**	**50 days**	**Mon 9/7/26**	**Fri 11/13/26**	**14**
16		Prepare Design Development Plans	35 days	Mon 9/7/26	Fri 10/23/26	
17		Prepare Outline Specifications	10 days	Mon 10/12/26	Fri 10/23/26	
18		DD Submittal to District	0 days	Fri 10/23/26	Fri 10/23/26	
19		BUSD Review and Comments	10 days	Mon 10/26/26	Fri 11/6/26	
20		Cost Estimate Preparation	10 days	Mon 10/26/26	Fri 11/6/26	
21		Final DD Package with Estimate	0 days	Fri 11/6/26	Fri 11/6/26	
22		BUSD Review of Estimate	5 days	Mon 11/9/26	Fri 11/13/26	
23		DD Approval and NTP to CD Phase	0 days	Fri 11/13/26	Fri 11/13/26	
24		**Construction Document Phase - 100% CD Package**	**36 days**	**Mon 11/16/26**	**Mon 1/4/27**	**15**
25		Prepare 100% CD Plans	20 days	Mon 11/16/26	Fri 12/11/26	
26		Prepare 100% CD Specifications	15 days	Mon 11/23/26	Fri 12/11/26	
27		DSA Registration	1 day	Tue 11/24/26	Tue 11/24/26	
28		CD Submittal to District	0 days	Fri 12/11/26	Fri 12/11/26	
29		BUSD Review and Comments	10 days	Mon 12/14/26	Fri 12/25/26	
30		Cost Estimate Preparation	10 days	Mon 12/14/26	Fri 12/25/26	
31		Final CD Package with Estimate	0 days	Mon 12/28/26	Mon 12/28/26	
32		BUSD Review of Estimate	5 days	Mon 12/28/26	Fri 1/1/27	
33		DSA Fees Due	1 day	Tue 12/29/26	Tue 12/29/26	
34		CD Approval and Finalize for DSA	1 day	Mon 1/4/27	Mon 1/4/27	
35		**DSA Approval Process**	**144 days**	**Tue 1/5/27**	**Fri 7/23/27**	
36		DSA Submittal/Intake	9 days	Tue 1/5/27	Fri 1/15/27	
37		DSA Review	100 days	Mon 1/18/27	Fri 6/4/27	
38		DSA Backcheck Corrections	30 days	Mon 6/7/27	Fri 7/16/27	
39		DSA Backcheck Review/Approval	3 days	Mon 7/19/27	Wed 7/21/27	
40		DSA Stamp Out	2 days	Thu 7/22/27	Fri 7/23/27	
41		**Advertise/Bid**	**45 days**	**Mon 7/26/27**	**Fri 9/24/27**	**35**
42		Preparation of Bid Package	5 days	Mon 7/26/27	Fri 7/30/27	
43		Project Site Walk	0 days	Mon 8/2/27	Mon 8/2/27	
44		Bid RFIs	15 days	Mon 8/2/27	Fri 8/20/27	
47		Bidding Period	40 days	Mon 8/2/27	Fri 9/24/27	
45		Bid RFIs Due	0 days	Fri 8/20/27	Fri 8/20/27	
46		Issue Addendae	5 days	Mon 8/23/27	Fri 8/27/27	
48		Bids Due	0 days	Fri 9/24/27	Fri 9/24/27	
49		**Review Bids and Award Contract**	**8 days**	**Mon 9/27/27**	**Wed 10/6/27**	**41**
50		Review Bids	1 day	Mon 9/27/27	Mon 9/27/27	
51		Award Contract	1 day	Tue 9/28/27	Tue 9/28/27	
52		Contracts	5 days	Wed 9/29/27	Tue 10/5/27	
53		Notice to Proceed	1 day	Wed 10/6/27	Wed 10/6/27	
54		**Construction**	**220 days**	**Mon 10/11/27**	**Fri 8/11/28**	**49**
55		Mobilization	5 days	Mon 10/11/27	Fri 10/15/27	
56		Construction start	180 days	Mon 10/18/27	Fri 6/23/28	
57		Punch	15 days	Mon 6/26/28	Fri 7/14/28	
58		Completion	20 days	Mon 7/17/28	Fri 8/11/28	

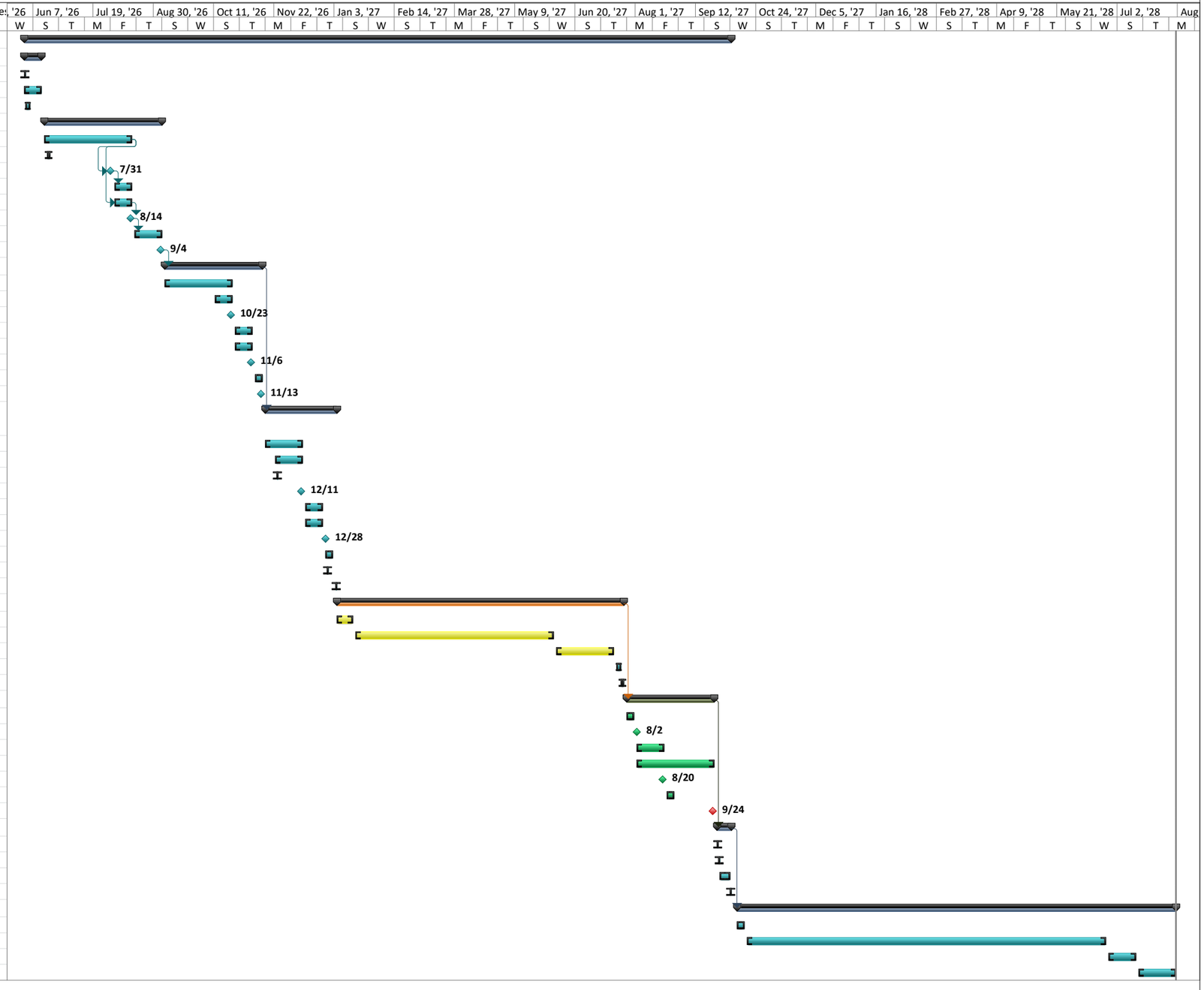

BURBANK UNIFIED SCHOOL DISTRICT
Human Resources Services

REPORT TO THE BOARD

TO:	Members of the Board of Education
FROM:	Human Resources Services
PREPARED BY:	Lauren Trammell, Executive Assistant of Human Resources Services
SUBMITTED BY:	Lauren Trammell, Executive Assistant of Human Resources Services
DATE:	June 25, 2026
SUBJECT:	Approval of Variable Waiver Request-Certificated Staff

---

Background
Since July 1994, the California Commission on Teacher Credentialing (CTCC) has had the authority to issue waiver documents that have to do with educator preparation and credentialing, and with the ability of employers to employ or assign persons who are not appropriately credentialed for their assignment. The California Commission on Teacher Credentialing has identified Special Education as an area which has a shortage of both credentialed teachers and students in teacher preparation programs, and, therefore, special education is a specialty area which receives many requests for waivers of credential requirements.

Discussion/Issues
At present, the Burbank Unified School District (BUSD) seeks to employ one (1) Speech Pathologist for the 2026-2027 school year, who has completed credential requirements to be fully authorized in Speech Language Pathology. Other assignment options have been considered; however, the waiver of credential requirements is our only legal recourse at the time for the following person:

Sarah Wells	Speech Pathology	Special Education

Fiscal Impact
Other than staff time, there are not costs associated with the submission of this waiver.

Recommendation
Human Resources Services, recommends that the Board of Education approve the Variable Waiver Request for Certificated Staff for school year 2026-2027, as presented.

BURBANK UNIFIED SCHOOL DISTRICT
Human Resources Services

REPORT TO THE BOARD

TO:	Members of the Board of Education
FROM:	Jason Hasty, Assistant Superintendent of Business Services
PREPARED BY:	Lauren Trammell, Executive Assistant of Human Resources Services
SUBMITTED BY:	Lauren Trammell, Executive Assistant of Human Resources Services
DATE:	June 25, 2026
SUBJECT:	Ratification of Tentative Agreement between the Burbank Unified School District (BUSD) and Burbank Teacher's Association (BTA) regarding Salary Schedule F Miscellaneous Salary Rates in Accordance with AB1200 (Chapter 1213/Statutes 1991), AB 2756 (Chapter 54/Statutes 2004), GC 3547.5

Background
The Burbank Teacher's Association (BTA) and the District have tentatively agreed to changes to Salary Schedule F, Miscellaneous Salary Rates.

Discussion/Issues
Exhibit F outlines miscellaneous salary rates applicable to certificated bargaining unit members in the Burbank Unified School district. The primary focus of this revision is to increase hourly compensation for summer school and related instructional assignments. The tentatively agreed changes are as follows:

- Summer School Teacher salary was increased from $53.46 to $66.99 per hour
- Summer School Administrator Designee was established at $70.34 per hour
- Summer School Nurse salary was established at $66.99 per hour
- Summer School Teacher- Adult Education has increased from $54.14 to $66.99 per hour

The updated Exhibit F reflects the District's competitive compensation for summer school programs.

Fiscal Impact
The AB 1200 outlines any fiscal impacts of the tentative agreement.

Recommendation
Jason Hasty, Assistant Superintendent of Business Services, recommends that the Board of Education ratify the Tentative Agreement between the Burbank Unified School District (BUSD) and Burbank Teacher's Association (BTA) regarding Salary Schedule F Miscellaneous Salary Rates, effective June 1, 2026, as presented.

EXHIBIT F: MISCELLANEOUS SALARY RATES

BURBANK UNIFIED SCHOOL DISTRICT
MISCELLANEOUS SALARY RATES
Effective ~~January 1, 2025~~ June 1, 2026

Summer School Teacher	~~53.46~~	~~per hour~~
	66.99	per hour
~~Summer School Teacher - Severely Handicapped / Autism~~	~~66.99~~	~~per hour~~
~~Summer School TOSA~~	~~66.99~~	~~per hour~~
Summer School Administrator Designee	70.34	per hour
Summer School Nurse	66.99	per hour
~~Extended Summer School Teacher / Intersession Teacher~~	~~53.46~~	~~per hour~~
Summer School Teacher-Adult Education	~~54.14~~	~~per hour~~
	66.99	per hour
Saturday Program Teacher	169.90	per day
Home Teacher	42.39	per hour
Day-to-Day Substitute*	206.45	per day
Day-to-Day Substitute (Spec Ed)*	216.78	per day
Curriculum Writing (K-12)	39.67	per hour
Other Hourly (K-12)	39.67	per hour
Curriculum Writing (Adult Education)	31.03	per hour
Other Hourly (Adult Education)	31.03	per hour
Intervention Teaching	53.46	per hour
Secondary Class Coverage	54.74	per class period
Elementary Class Coverage	54.74	per hour
TOSA Class Coverage	139.80	half-day (1-3 hours/sections in same classroom)
TOSA Class Coverage	279.60	full-day (at least 5 hours/sections in same classroom)

When a unit member has covered another unit member's elementary class or students from another unit member's elementary class or students from another elementary class at the direction of an administrator compensation will be paid each time as shown above. When an elementary class must be divided into more than one class, students shall be divided equally, as much as possible, by the number of classes. Compensation will be based on Exhibit F; the hourly rate will be divided by the number of classrooms in which the students are placed.

Department Chairperson-High School**	1,735	per semester
Department Chairperson-Middle School**	1,735	per semester

Completion of Clear CTE Credential	1,870	one-time stipend
Professional Mentors**	2,245	per year for one mentee,
	4,490	per year for two mentees
Induction Mentors**	2,245	per year for one mentee,
	4,490	per year for two mentees
Lead Speech and Language Pathologist**	8,258	per year
Miscellaneous Unit Rate	1,538	per unit (may be applied as a
percentage)		

Regular Hourly Assignments (other than those specified elsewhere in this Agreement). Compensation of 16.7% of the unit member's daily rate based upon Exhibit A will be paid for each hour of professional assignment.

* Pertains to bargaining unit members only
** May be prorated for partial term of service

FOR THE ASSOCIATION:

Brenda Kosbab 06/04/2026
Date

Alexander Moore 06/04/2026
Date

FOR THE DISTRICT:

Jason Hasty 06/05/2026
Date

Cindy Quiterio 2026-06-08
Date

H. IMPACT OF PROPOSED AGREEMENT ON SUBSEQUENT YEARS

Combined General Fund MYP

Bargaining Unit: Combined

	Object Code	2025-26 Total Revised Budget After Settlement	2026-27 First Subsequent Year After Settlement	2027-28 Second Subsequent Year After Settlement
REVENUES				
LCFF Revenue	8010-8099	$ 171,000,278	$ 176,169,439	$ 179,551,031
Federal Revenue	8100-8299	$ 8,175,655	$ 8,635,483	$ 8,635,483
Other State Revenue	8300-8599	$ 33,906,558	$ 39,090,683	$ 35,395,744
Other Local Revenue	8600-8799	$ 8,253,625	$ 7,966,080	$ 7,915,547
TOTAL REVENUES		$ 221,336,116	$ 231,861,685	$ 231,497,805
EXPENDITURES				
Certificated Salaries	1000-1999	$ 84,082,646	$ 86,453,861	$ 87,383,428
Classified Salaries	2000-2999	$ 39,332,924	$ 40,122,565	$ 40,692,132
Employee Benefits	3000-3999	$ 51,250,077	$ 52,267,829	$ 52,828,706
Books and Supplies	4000-4999	$ 6,467,317	$ 8,010,822	$ 7,681,490
Services and Other Operating Expenditures	5000-5999	$ 44,372,124	$ 43,925,323	$ 45,039,387
Capital Outlay	6000-6999	$ 1,602,158	$ 81,000	$ 65,000
Other Outgo (excuding Indirect Costs)	7100-7299 7400-7499	$ 2,939,713	$ 1,567,236	$ 1,567,236
Transfers of Indirect Costs	7300-7399	$ (762,431)	$ (1,087,763)	$ (1,087,763)
Other Adjustments			$ -	$ -
TOTAL EXPENDITURES		$ 229,284,528	$ 231,340,873	$ 234,169,615
OTHER FINANCING SOURCES/USES				
Transfers In and Other Sources	8900-8979	$ -	$ -	$ -
Transfers Out and Other Uses	7600-7699	$ 2,000,000	$ 1,750,000	$ 1,750,000
Contributions	8980-8999	$ -	$ -	$ -
OPERATING SURPLUS (DEFICIT)*		$ (9,948,412)	$ (1,229,188)	$ (4,421,810)
BEGINNING FUND BALANCE	9791	$ 48,586,013	$ 38,637,601	$ 37,408,413
Audit Adjustments/Other Restatements	9793/9795	$ -		
ENDING FUND BALANCE		$ 38,637,601	$ 37,408,413	$ 32,986,603
COMPONENTS OF ENDING FUND BALANCE:				
Nonspendable	9711-9719	$ 45,000	$ 45,000	$ 45,000
Restricted	9740	$ 18,820,974	$ 21,848,719	$ 22,291,424
Committed	9750-9760	$ -	$ -	$ -
Assigned	9780	$ 12,833,087	$ 8,521,967	$ 3,572,590
Reserve for Economic Uncertainties	9789	$ 6,938,540	$ 6,992,726	$ 7,077,588
Unassigned/Unappropriated Amount	9790	$ -	$ -	$ (0)

*Net Increase (Decrease) in Fund Balance

NOTE: 9790 amounts must be positive

Burbank Unified School District
Combined

I. IMPACT OF PROPOSED AGREEMENT ON UNRESTRICTED RESERVES

1. State Reserve Standard

		2025-26	2026-27	2027-28
a.	Total Expenditures, Transfers Out, and Uses (Including Cost of Proposed Agreement)	$ 231,284,528	$ 233,090,873	$ 235,919,615
b.	Less: Special Education Pass-Through Funds	$ -	$ -	$ -
c.	Net Expenditures, Transfers Out, and Uses	$ 231,284,528	$ 233,090,873	$ 235,919,615
d.	State Standard Minimum Reserve Percentage for this District **Enter percentage** →	3.00%	3.00%	3.00%
e.	State Standard Minimum Reserve Amount for this District (For districts with less than 1,001 ADA, this is the greater of Line a, times Line b, or $50,000)	$ 6,938,536	$ 6,992,726	$ 7,077,588

2. Budgeted Unrestricted Reserve (After Impact of Proposed Agreement)

a.	General Fund Budgeted Unrestricted Designated for Economic Uncertainties (9789)	$ 6,938,540	$ 6,992,726	$ 7,077,588
b.	General Fund Budgeted Unrestricted Unassigned/Unappropriated Amount (9790)	$ -	$ -	$ -
c.	Special Reserve Fund (Fund 17) Budgeted Designated for Economic Uncertainties (9789)	$ -	$ -	$ -
d.	Special Reserve Fund (Fund 17) Budgeted Unassigned/Unappropriated Amount (9790)	$ -	$ -	$ -
e.	Total Available Reserves	$ 6,938,540	$ 6,992,726	$ 7,077,588
f.	Reserve for Economic Uncertainties Percentage	3.00%	3.00%	3.00%

3. Do unrestricted reserves meet the state minimum reserve amount?

2025-26	Yes	X	No	
2026-27	Yes	X	No	
2027-28	Yes	X	No	

4. If no, how do you plan to restore your reserves?

5. **Does the Total Compensation Increase/(Decrease) on Page 1, Section A, #5 agree with the Total Increase/(Decrease) for all funds as a result of the settlement(s)? Please explain any variance.**

Total Compensation Increase/(Decrease) on Page 1, Section A, #5	$	-
General Fund balance Increase/(Decrease), Page 4c, Column 2	$	-
Adult Education Fund balance Increase/(Decrease), Page 4d, Column 2	$	-
Child Development Fund balance Increase/(Decrease), Page 4e, Column 2	$	-
Cafeteria Fund balance Increase/(Decrease), Page 4f, Column 2	$	-
Other Fund balance Increase/(Decrease), Page 4g, Column 2	$	-
Other Fund balance Increase/(Decrease), Page 4h, Column 2	$	-
Total all fund balances Increase/(Decrease) as a result of the settlement(s)	$	-
Variance	$	-

Variance Explanation:

The Total Compensation Increase shown on Page 1 is recognized in 2026-27 (the first subsequent fiscal year), not in the current year (2025-26). Accordingly, no settlement adjustment is reflected in the current-year fund-impact pages (Page 4, Column 2), and the current-year reconciliation nets to $0. The full fiscal impact of the agreements — approximately $673,468 across all funds, of which approximately $585,630 is General Fund — is

6. **Will this agreement create or increase deficit financing in the current or subsequent years?**
"Deficit Financing" is defined to exist when a fund's expenditures and other financing uses exceed its revenues and other financing sources in a given year. If a deficit is shown below, provide an explanation and any deficit reduction plan, as necessary.

General Fund Combined	Surplus/ (Deficit)	(Deficit) %	Deficit primarily due to:
Current FY Surplus/(Deficit) before settlement(s)?	$(13,919,554)	(6.1%)	Declining enrollment
Current FY Surplus/(Deficit) after settlement(s)?	$ (9,948,412)	(4.3%)	Declining enrollment
1st Subsequent FY Surplus/(Deficit) after settlement(s)?	$ (1,229,188)	(0.5%)	Declining enrollment
2nd Subsequent FY Surplus/(Deficit) after settlement(s)?	$ (4,421,810)	(1.9%)	Declining enrollment

Deficit Reduction Plan (as necessary):

The General Fund reflects ongoing operating deficits both before and after the settlements: approximately $(9.9) million in 2025-26 (Estimated Actuals), $(1.2) million in 2026-27, and $(4.4) million in 2027-28, driven primarily by declining enrollment and the expiration of one-time funds. The agreements add approximately

7. **Were "Other Adjustments" amount(s) entered in the multiyear projections (pages 5a and 5b) for 1st and 2nd Subsequent FY?**

"Other Adjustments" could indicate that a budget reduction plan was/is being developed to address deficit spending, and to rebuild reserves. Any amount shown below must have an explanation. If additional space is needed, attach a separate sheet, or use page 8a.

MYP	Amount	"Other Adjustments" Explanation
1st Subsequent FY Unrestricted, Page 5a	$ -	No separate "Other Adjustments" were layered into the Multiyear Project
1st Subsequent FY Restricted, Page 5b	$ -	
2nd Subsequent FY Unrestricted, Page 5a	$ -	
2nd Subsequent FY Restricted, Page 5b	$ -	

J. CERTIFICATION NO. 1: CERTIFICATION OF THE DISTRICT'S ABILITY TO MEET THE COSTS OF THE COLLECTIVE BARGAINING AGREEMENT

This certification page must be signed by the district's Superintendent and Chief Business Official at the time of public disclosure and is intended to assist the district's Governing Board in determining whether the district can meet the costs incurred under the tentative Collective Bargaining Agreement in the current and subsequent years. The absence of a certification signature or if "I am unable to certify" is checked should serve as a "red flag" to the district's Governing Board.

In accordance with the requirements of Government Code Sections 3540.2 and 3547.5, the Superintendent and Chief Business Official of the Burbank Unified School District hereby certify that the District can meet the costs incurred under this Collective Bargaining Agreement during the term of the agreement from July 1, 2025 to June 30, 2026.

Board Actions

The board actions necessary to meet the cost of the agreement in each year of its term are as follows:

Current Year

Budget Adjustment Categories:	Budget Adjustment Increase/(Decrease)
Revenues/Other Financing Sources	$ 6,984,320
Expenditures/Other Financing Uses	$ 2,284,697
Ending Balance(s) Increase/(Decrease)	$ 4,699,623

Subsequent Years

Budget Adjustment Categories:	Budget Adjustment Increase/(Decrease)
Revenues/Other Financing Sources	$ -
Expenditures/Other Financing Uses	$ 1,346,935
Ending Balance(s) Increase/(Decrease)	$ (1,346,935)

Budget Revisions

If the district does not adopt and submit within 45 days all of the revisions to its budget needed in the current year to meet the costs of the agreement at the time of the approval of the proposed collective bargaining agreement, the county superintendent of schools is required to issue a qualified or negative certification for the district on its next interim report.

Assumptions

See attached page for a list of the assumptions upon which this certification is based.

Certifications

____ I hereby certify ____ I am unable to certify

District Superintendent (Signature)	Date

____ I hereby certify ____ I am unable to certify

Chief Business Official (Signature)	Date

Special Note: The Los Angeles County Office of Education may request additional information, as necessary, to review the district's compliance with requirements.

Burbank Unified School District
Combined

Assumptions and Explanations (enter or attach documentation)

The assumptions upon which this certification is made are as follows:

1. Baseline. The cost of the agreement is measured against the 2025-26 Second Interim Budget (Projected Year Totals, March 5, 2026). The current-year fund-impact pages (4a-4f) bridge the Second Interim to the 2025-26 Estimated Actuals reported in the 2026-27 Adopted Budget.

2. Scope. This combined disclosure covers two tentative agreements. (a) CSEA, Chapter 674 (classified): amends Article 8 (Compensation) with a salary range reallocation for the Accounting, Clerical, Auxiliary, Purchasing, and Technology job families (Exhibit A, averaging ~3.84% for affected unit members) and a pest-control certification stipend (Art. 8.8). (b) Burbank Teachers Association (BTA, certificated): amends Exhibit F (Miscellaneous Salary Rates), principally increasing the Summer School Teacher rate from $53.46 to $66.99 per hour and the Summer School Teacher–Adult Education rate from $54.14 to $66.99 per hour, effective June 1, 2026. Neither agreement includes an across-the-board increase, longevity, or step/column extension. Combined cost ~$673,468 all funds ($497,695 salary + $175,772 benefits): CSEA ~$537,415 all funds (~$449,577 General Fund) and BTA ~$136,053 (General Fund, restricted Special Education summer school). Recognized beginning 2026-27 and continuing into 2027-28; no one-time components.

3. LCFF. Per the 2026-27 Adopted Budget MYP: $176,169,439 (2026-27), +1.92% to $179,551,031 (2027-28), +1.29% (2028-

Form MYP; the settlements are layered on top.

5. Benefits. Current CalPERS, STRS, FICA, Medicare, SUI, and Workers' Compensation rates; a ~38.4% blended load on the CSEA classified salary increment and a ~24.31% load on the BTA certificated (STRS, FICA-exempt) summer-school increment.

6. Contribution. Unrestricted-to-restricted contributions fund the settlements in contributing restricted programs: $37,326 for CSEA (SpEd Res 65000, IDEA Res 33100, RRMA Res 81500) and $71,438 for BTA (Special Education summer school), totaling $108,764.

7. Reserves. The District maintains the State-required 3% minimum Reserve for Economic Uncertainties in the budget year and both subsequent years (3.00% each year) and meets the Criteria and Standards reserve requirement.

MULTIYEAR PROJECTION NARRATIVE: The MYP (Pages 5a-5c) adopts the District's 2026-27 Budget Adoption and Form MYP with both settlements layered into 2026-27 and 2027-28. Combined General Fund ending fund balance: $38.6M (2025-26), $37.4M (2026-27), $33.0M (2027-28). The General Fund shows ongoing operating deficits of ~$(9.9)M, $(1.2)M,

Concerns regarding affordability of agreement in subsequent years (if any):

While available reserves remain at the 3% State minimum in each year, the structural deficit leaves limited cushion above the standard. The District will rely on its Fiscal Stabilization Plan (additional ongoing expenditure reductions, attrition and vacancy management, and revenue enhancements) to sustain the ongoing cost of this agreement and maintain long-term fiscal solvency. These measures will be quantified at subsequent Interim Reports.

H. IMPACT OF PROPOSED AGREEMENT ON SUBSEQUENT YEARS

Restricted General Fund MYP

Bargaining Unit: Combined

	Object Code	2025-26 Total Revised Budget After Settlement	2026-27 First Subsequent Year After Settlement	2027-28 Second Subsequent Year After Settlement
REVENUES				
LCFF Revenue	8010-8099	$ -	$ -	$ -
Federal Revenue	8100-8299	$ 8,175,655	$ 8,635,483	$ 8,635,483
Other State Revenue	8300-8599	$ 27,798,509	$ 33,013,508	$ 29,111,761
Other Local Revenue	8600-8799	$ 6,816,186	$ 6,928,641	$ 6,928,641
TOTAL REVENUES		$ 42,790,350	$ 48,577,632	$ 44,675,885
EXPENDITURES				
Certificated Salaries	1000-1999	$ 17,360,510	$ 17,697,204	$ 17,960,821
Classified Salaries	2000-2999	$ 18,578,705	$ 18,940,071	$ 19,196,212
Employee Benefits	3000-3999	$ 14,965,066	$ 15,348,807	$ 15,562,593
Books and Supplies	4000-4999	$ 4,792,887	$ 6,172,023	$ 5,784,217
Services and Other Operating Expenditures	5000-5999	$ 25,776,704	$ 25,901,002	$ 26,433,474
Capital Outlay	6000-6999	$ 477,166	$ 65,000	$ 65,000
Other Outgo (excluding Indirect Costs)	7100-7299 7400-7499	$ 1,323,171	$ 1,323,171	$ 1,323,171
Transfers of Indirect Costs	7300-7399	$ 894,169	$ 1,320,650	$ 713,621
Other Adjustments			$ -	$ -
TOTAL EXPENDITURES		$ 84,168,378	$ 86,767,928	$ 87,039,109
OTHER FINANCING SOURCES/USES				
Transfers In and Other Sources	8900-8979	$ -	$ -	$ -
Transfers Out and Other Uses	7600-7699	$ -	$ -	$ -
Contributions	8980-8999	$ 45,627,547	$ 41,218,042	$ 42,805,929
OPERATING SURPLUS (DEFICIT)*		$ 4,249,519	$ 3,027,746	$ 442,705
BEGINNING FUND BALANCE	9791	$ 14,571,455	$ 18,820,974	$ 21,848,719
Audit Adjustments/Other Restatements	9793/9795	$ -		
ENDING FUND BALANCE		$ 18,820,974	$ 21,848,719	$ 22,291,424
COMPONENTS OF ENDING FUND BALANCE:				
Nonspendable	9711-9719	$ -	$ -	$ -
Restricted	9740	$ 18,820,974	$ 21,848,719	$ 22,291,424
Committed	9750-9760			
Assigned	9780			
Reserve for Economic Uncertainties	9789	$ -	$ -	$ -
Unassigned/Unappropriated Amount	9790	$ -	$ -	$ -

*Net Increase (Decrease) in Fund Balance

NOTE: 9790 amounts must be positive

BURBANK UNIFIED SCHOOL DISTRICT
Human Resources Services

REPORT TO THE BOARD

TO: Members of the Board of Education

FROM: Jason Hasty, Assistant Superintendent of Business Services

PREPARED BY: Lauren Trammell, Executive Assistant of Human Resources Services

SUBMITTED BY: Lauren Trammell, Executive Assistant of Human Resources Services

DATE: June 25, 2026

SUBJECT: Ratification of Tentative Agreement between the Burbank Unified School District (BUSD) and the California School Employees Association (CSEA), Chapter 674, reallocations and salary changes, in Accordance with AB 1200 (Chapter 1213/Statutes 1991), AB2756 (Chapter 52/Statutes 2004), GC 3547.5

Background
The District and CSEA have reached a Tentative Agreement following negotiations focused on compensation and salary structure for classified employees.

Discussion/Issues
The results of this analysis and the tentative agreement reflect adjustments to salary range allocations across numerous classifications. These adjustments are intended to better align job classifications with market conditions, internal equity, and scope of work performed by classified employees.
The following job titles will see an increase in salary:

Job Title	Change to Range
Benefits Technician	50
Senior School Finance Technician	43
Account Analyst	62
Financial Analyst	62
Lead Payroll Technician	53
Assessment & Accountability Technician	58
Certificated HR Analyst	50
Administrative Secretary	47
Human Resources Technician	46
Secretary/Guidance Technician	42
Senior Attendance Technician	41
High School Office Manager	49
Middle School Office Manager	47
Elementary School Office Manager	46
Adult School Office Manager	46
Children's Center School Office Manager	46
Satellite School Office Manager	46

Food Services Technician	46
Children's Center Health Technician	47
Wellness & Behavior Specialist	62
Student Services & Attendance Specialist	59
Certified Occupational Therapy Assistant	55
Speech-Language Pathology Assistant	55
Office Specialist III (Adult School/ELL)	41
Office Specialist II	39
Library Coordinator	38
Buyer	49
Purchasing Technician	47
Facilities Services Assistant	48

Fiscal Impact
The AB 1200 outlines any fiscal impact of the tentative agreement.

Recommendation
Human Resource Services, recommends that the Board of Education ratify Tentative Agreement between the Burbank Unified School District (BUSD) and the California School Employees Association (CSEA), Chapter 674, reallocations and salary changes, effective June 1, 2026, as presented.

ARTICLE 8 - COMPENSATION

8.1 Employees covered by this Agreement shall be paid salaries, wages, and pay rates as provided in the attached EXHIBITS A and B as included in the Appendices of this Agreement. EXHIBIT B, the Classified Salary Schedule, shall be amended in as follows:

8.1.1 Effective July 1, 2023, the Classified Salary Schedule shall be increased by 3.5%.

~~8.1.2 Finances permitting, the District and CSEA commit to completing a salary reallocation analysis for the following job families in 2025-2026: Accounting, Clerical, Auxiliary, Purchasing, and Technology.The District agrees that no funds will be allocated to negotiated wage increases for any District employees until the salary study reallocation analysis is completed.~~ **The District and CSEA completed a Salary and Reallocation Analysis and have adjusted the following job families: Accounting, Clerical, Auxiliary, Purchasing, and Technology. Range allocation adjustments are listed in Exhibit A.**

~~8.1.3 Effective July 1, 2026, all ranges within the Classified Salary Schedule shall be increased by 3 steps. The maximum step for each range shall be increased from 6 steps to 9 steps.~~

8.2 In the event the District intends to take to the Board of Education a resolution for layoffs/reductions affecting unit members, the District shall notify the Association prior to March 15th of each fiscal year. This does not affect any rights found elsewhere in the Agreement or in law.

8.3 LONGEVITY PAY

Effective July 1, 2025, unit members will receive longevity pay for creditable service as follows:

10 years - $192 per month
15 years - $229 per month
20 years - $284 per month
25 years - $330 per month
30 years - $374 per month

This amount will be prorated for any employee with a daily assignment of less than six (6) hours.

8.3.1 Longevity pay for all bargaining unit members shall be computed and

paid based on each unit member's original date of employment as defined in EXHIBIT C of this Agreement.

8.4 TRANSLATING STIPEND

8.4.1 Provided he/she passes the District's basic bilingual and oral proficiency test, an employee who is annually designated by his/her supervisor(s),

who agrees to provide interpreting and/or translating services, and who does not have bilingual responsibilities as part of his/her official job description, shall be entitled to a stipend for oral translation within one's own department or in another office or department (with approval of his/her immediate supervisor). They shall be compensated at a flat $53 per month for the remainder of that school year.

8.4.2 Provided he/she passes the District's basic bilingual written proficiency test, an employee who is annually designated by his/her supervisor(s), who agrees to provide interpreting and/or translating services, and who does not have bilingual responsibilities as part of his/her official job description, shall be entitled to a stipend for written translation within one's own department or in another office or department (with approval ofhis/her immediate supervisor). They shall be compensated an additional flat $65 per month for the remainder of that school year.

8.4.2.1 Written translation, for purposes of this article, does not include Special Education, medical, discipline, or Student Study Team-related issues, where knowledge of technical or legal terminology is required.

8.4.3 Any part-time employee who provides interpreting and/or translation, shall be given additional time at his/her hourly rate, up to eight (8) hours per day/forty (40) hours per week in order to not negatively impact his/her regularly assigned duties.

8.4.4 Any full-time employee who provides interpreting and/or translation shall be given additional time in order not to negatively impact his/her regularly assigned duties.

8.4.5 If translating causes an employee to work more than eight (8) hours in one day, or forty (40) hours in one week, he/she shall be paid the standard overtime rate.

8.4.6 An employee whose job description includes interpreting and/or translation in his/her particular program, but whose assignment requires the interpretation and/or translation of fewer than three (3) languages shall receive a flat **$**74 per month if designated and required by the immediate supervisor to serve the site in general for the remainder of that school year.

8.4.7 An employee whose job description includes interpreting and/or translation in their particular program, but whose assignment requires the interpretation and/or translation of three (3) or more languages shall receive a flat $142 per month.

8.5 HEALTH CARE STIPEND

When a student has been identified as having a severe health care need that has been determined by a physician and an IEP committee to be non-life threatening and/or not requiring one-to-one attention, then a stipend in the amount of $309 per month will be paid to a current classified employee assigned to perform any or all of the following services: gastrostomy tube feeding, catheterization, oxygen administration and care of related equipment, administering medication as directed, providing basic emergency care as needed, including but not limited to first aid, cardio pulmonary resuscitation, or other life sustaining efforts until medical assistance arrives.

An employee earning the stipend may be required to provide these services for more than one student. No more than one health care stipend may be earned by an employee at one time. This stipend shall not apply to employees who have the above stated responsibilities as part of their official job description.

8.6 FIRST AID STIPEND

Employees who volunteer and are designated by their supervisor to provide first aid in the absence of the school nurse on a regular or frequent basis, and who do not have these responsibilities as part of their official job description, shall be entitled to a stipend equivalent to 5% of their base salary. Once designated by their supervisor and Director of Human Resources to provide these services, employee(s) shall receive the stipend for the remainder of that semester. The employee(s) shall receive official notification of their designation from Human Resources.

First Aid Certificates shall be required for the following positions:

- Campus Supervisor
- Paraeducator - Health Care
- Health Services Assistant
- Paraeducator – Severely Impaired
- Office Assistant – Elementary
- Sr. Attendance Technician Lead Custodian
- School Office Manager – Elementary
- School Office Manager – Continuation
- Secretary III – Children Centers

All positions listed above have first aid responsibilities as part of their official job description and compensation for this responsibility has been included in the base salary with the exception of Secretary II's at the elementary school level who shall be paid an additional 5% stipend above and beyond their base salary.

New employees and employees designated by their supervisors to provide first aid services, shall obtain a First Aid certificate within six months of employment or

designation.

First Aid training and the First Aid Certificate shall be provided at District expense and training shall occur during working hours. Renewal of the First Aid Certificate shall be accomplished at the District's expense and training shall occur during working hours.

8.7 SEVERELY IMPAIRED STIPEND

When a student has been identified as having a severely impaired need, determined by a physician and an IEP committee to be non-life-threatening, thena stipend in the amount of $181 per month will be paid to a current classified employee assigned to perform any of all of the following services: toileting, eating, washing, personal hygiene, assisting with physical aid appliances, assisting lifting in/out of wheelchair, assisting students to and from school bus or other transportation and/or in moving to and from activities on school site, basic first aid, administering medication as directed.

An employee earning this stipend may be required to provide these services for more than one student. No more than one severely impaired stipend may be earned by an employee at one time. This stipend shall not apply to employees who have the above stated responsibilities as part of their official job description.

8.8 GROUNDS TECHNICIANS

Grounds Technicians who obtain a pest control certification (Laws and Regulation and Cat. B) at their own expense and during their own time shall receive a monthly stipend of ~~5%~~ **10%** of the salary for the duration of that license. Continuation of the stipend will be dependent upon successful renewal of the pest control certification (Laws and Regulation and Cat. B) which will be at District expense and on District time.

8.9 ASBESTOS

Employees who have been designated by their supervisor to provide asbestos removal and who hold a valid National Environmental Training for Hazardous Materials, Asbestos and Lead certification shall receive a stipend of $206 per month for the duration of the license.

8.10 GOVERNMENTAL LICENSES

New hires or employees who transfer to positions requiring the following governmental licenses as a condition of employment as set forth in the District'sjob description shall be granted a one-time payment upon hire or transfer of $309 for each such license held when a copy of such license is presented to theDistrict: Back Flow License, Fire Extinguisher License, and Bureau of Automotive Inspection Certificate.

8.11 NOTARY PUBLIC STIPEND

The District and CSEA agree that an annual stipend of $1,238 shall be provided for possession and use in the District of a Notary Public Commission Certificate. For those employees working less than 12 months/year, this stipend shall be prorated to the equivalent monthly amount of $104. The person receiving this stipend shall provide

notary services for any site or department for the sole purpose of District business related activities.

8.12 TECHNOLOGY STIPEND

The District and CSEA agree that an annual stipend of $2,570 shall be paid to the designated Site Technician. The unit member receiving this stipend shall provide basic technology support for the assigned site. Payment shall be $1,285 per semester.

PAY AND ALLOWANCES:
(Sections 8.13 through 8.21 shall only be opened by mutual agreement)

8.13 REGULAR RATE OF PAY

The regular rate of pay for each position in the bargaining unit shall be in accordance with the rates established for each class as provided for in Exhibit A, B, and C attached.

8.14 WARRANTS

All regular warrants of bargaining unit members shall be itemized to include voluntary and involuntary deductions to the extent that the payroll service of the County Superintendent of Schools provides.

8.15 PAYROLL PROCEDURES

All hourly salary rate bargaining unit members shall be paid once a month on the tenth (10th) calendar day following the end of the month. If the normal pay day falls on a Saturday, Sunday, or holiday, the warrant shall be issued on the preceding workday.

8.15.1 The District shall utilize a twenty-two (22) working day County Payroll option for the purpose of making salary payments to bargaining unit members. It is understood that absences (including but not limited to sick leave, vacation, bereavement, and industrial accident) will be charged on an actual day basis. New employees will receive pay based on actual days worked during the first month of employment and terminating employees will receive pay based on the actual days worked during the last month of employment.

When an employee is absent without pay for an entire month, there shall be no salary payment. When an employee is absent without pay for a partial month, pay for that month will be based on twenty-two (22) days, less days not compensated during the month. However, an employee working one day in a twenty-three (23) day month would receive pay for that day. Lump sum vacation payments will be computed on a twenty-two (22) day basis.

8.15.2 The District and CSEA recognize and acknowledge that these provisions aresubject to normal operating circumstances and exceptions may occur in the event of circumstances beyond the District's control.

8.16 PAYROLL ERRORS

8.16.1 Insufficient Pay: Any payroll error resulting in insufficient payment for a bargaining unit member shall be corrected, and a supplemental warrant issued, not later than five (5) working days after the bargaining unit member provides notice to the Payroll Department. When a payroll error occurs where the original monthly warrant(s) cannot be given to the bargaining unit member on his/her regularly scheduled pay day, the member shall have the option to request and receive a salary advance check from the District in the amount of ninety percent (90%) of the employee's estimated net salary.

8.16.2 Overpayment: Should a member be overpaid, the amount of the overpayment shall be repaid to the District. In every case, the affected employee shall be contacted first, and the repayment plan including repayment timelines shall be negotiated and agreed to in writing before any action to recapture the overpayment.

8.17 LOST WARRANTS

If a warrant to a bargaining unit member is mailed, and if the warrant is not delivered within five (5) days of date of mailing, the member may request and then shall receive a salary advance check from the District in the amount of the lost warrant. Such check shall be issued within five (5) working days of the bargaining unit member's notification to the Payroll Department. If the warrant is lost after receipt, the bargaining unit member shall notify the Payroll Department and the process for replacing the lost warrant shall commence.

8.18 COMPENSATION FOR WORKING OUT OF CLASSIFICATION

Bargaining unit members who are required to perform duties at a higher level not

reasonably related to those fixed and prescribed in the unit member's job classification (including substituting for absent employees) shall be temporarily compensated at the appropriate salary schedule subject to the following conditions:

8.18.1 The assignment of the higher level duties must exceed or be expected to exceed five working days in any fifteen (15) calendar day period.

8.18.2 The unit member shall be temporarily compensated at the next higher dollar amount of the appropriate salary range as it compares to the unit member's regular salary, but not less than five percent (5%) nor more than Step VI.

8.18.3 The higher rate shall be retroactive to the first day of the assignment to new duties in all cases in which such assignments exceed five (5) working days.

8.18.4 The higher rate shall terminate on the first working day that the unit member is no longer required to work at the higher level.

8.18.5 Determination as to when a unit member is required to work out of classification will be made by the Superintendent subject to the approval of the Board of Education.

8.18.6 Where there is no existing job description covering more complex responsibilities that employees are performing on a regular and on-going basis, and these responsibilities are not reasonably related to a bargaining unit member's job classification, the unit member shall be temporarily compensated in the following manner:

8.18.6.1 The unit member shall be temporarily compensated an additional five percent (5%) of the employee's current rate of pay.

8.18.6.2 An application must be made on a District developed form and signed by the unit member and his/her supervisor, and shall be submitted to Human Resources.

8.18.6.3 The stipend shall remain in effect as long as the employee is determined to be continuing the more complex responsibilities.

8.18.6.4 The Head of Human Resources (or designee) and a representative appointed by CSEA shall review and either approve or deny the request for compensation. The decision shall be final when an agreement is reached between CSEA and the Head of Human Resources (or designee). In the event that CSEA and the Head of

Human Resources (or designee) cannot reach agreement, the Superintendent shall make the decision and his/her decision shall be final.

8.19 PAYMENTS AFTER SEPARATION FROM EMPLOYMENT

8.19.1 Any bargaining unit member who terminates employment with the District due to resignation, retirement, termination due to disciplinary action, or for any other reason, shall receive payment for all salaries owed to the employee no later than the next scheduled pay day and in any event no later than fifteen work days after the employee is officially separated from employment.

8.19.2 Payment of accrued vacation or any other applicable benefit shall be handled following the same provisions in Article 8.18.1.

8.19.3 If separation from employment is a result of resignation or retirement, the bargaining unit member must submit copies of his/her letter of resignation / retirement to his/her immediate supervisor and Human Resources in order for the provisions of Article 8.19 to apply.

8.19.4 If separation from employment is a result of termination, the provisions of Article 8.19 shall automatically apply.

8.20 WORK CLOTHING

8.20.1 The cost of the purchase, lease, or rental of work clothing, identification badges, emblems, and cards required for District designated Facilities Services personnel, Food Services and Campus Supervision Assistants shall be borne by the District. Depending on the requirements of the job, work clothing may include at the discretion of the District, any or all of the following items of apparel: shirts, pants, coveralls, coats and rain gear.

If, through the employee's negligence (carelessness), clothing supplied by the District is destroyed, lost, or damaged, the District shall provide for the repair or replacement, but the costs shall be borne by the employee.

8.20.2 An Advisory Committee shall be established and shall meet at least once annually to assist in the implementation of Article 8.19.1 and shall consist of three (3) representatives appointed by the District and three representatives appointed by the Association.

8.21 REIMBURSEMENT FOR LOSS, DAMAGE, DESTRUCTION OF PERSONAL PROPERTY

8.21.1 The District shall reimburse employees for any verified loss, damage or destruction of personal property suffered while performing services to the District or while such personal property is on District premises in accordance with the following provisions:

8.21.1.1 Loss, damage, or destruction shall have occurred without fault of the employee.

8.21.1.2 Evidence of written pre-approval for the use of the personal property on District premises shall be provided in order to seek reimbursement for loss, damage, or destruction. No prior approval is needed for eyeglasses, hearing aids, dentures, watches, articles of clothing necessarily worn or carried by the employee, or vehicles.

8.21.1.3 The value of any item lost, damaged, or destroyed shall be determined as of the time of the verified loss, damage, or destruction and shall include normal allowance for depreciation.

8.21.1.4 Property claimed for reimbursement shall be valued at more than $25

8.21.1.5 Maximum reimbursement for any one incident shall be $700, except for vehicles.

8.21.1.6 The maximum reimbursement for all loss, damage, or destruction of personal property shall not exceed $7,500 in any fiscal year.

8.21.1.7 A written request for reimbursement must be filed by the employee within five (5) calendar days of the incident with Fiscal Services. Fiscal Services may conduct an investigation. The burden of proof in all cases is with the employee seeking reimbursement.

8.21.2 Reimbursement for loss, damage, destruction of vehicles.

8.21.2.1 The maximum reimbursement for vehicle loss, damage, or destruction shall be $1,250 or the insurance deductible, whichever is less.

8.21.2.2 Reimbursement is limited to payment for verified loss, damage, or destruction resulting from malicious acts of others.

8.21.2.3 A report shall be made by the employee to the police, and a copy of the police report shall be provided to Fiscal Services. If there is damage or destruction of a vehicle, two (2) written estimates from licensed repair facilities of repair cost shall be provided to Fiscal Services. The District payment shall be limited to the amount of the lowest estimate and shall be paid directly to the repair facility upon verification of satisfactory completion of repair.

8.21.2.4 If an employee receives any payment from an insurance carrier for any loss, damage or destruction for which the District gave reimbursement, the employee shall repay the District if such payment from an insurance carrier covers the same loss damage or destruction covered by the District.

The District shall, in addition, have all rights of subrogation. Subrogation means the District may seek to recoup the cost of reimbursement to the employee directly from the insurance carrier. The employee shall execute all assignments and other documents and cooperate and perform all other acts as required by the District in pursuing such rights of subrogation.

For the Association:

Laura Bauman — 06/17/2026
Laura Bauman — Date

Bobby Martinez — Date

Nicole Knoop — 06/17/2026
Nicole Knoop — Date

Hugo Sanchez — 06/18/2026
Hugo Sanchez — Date

Angelica FitzGerald — 06/17/2026
Angelica Fitzgerald — Date

Jessica Sanchez — 06/19/2026
Jessica Sanchez — Date

Reece Hernandez — 06/19/2026
Reece Hernandez — Date

Kailey McDonald — Date

Ian Bolles — 06/18/2026
Ian Bolles — Date

Magali Huerta — 06/18/2026
Magali Huerta — Date

For the District

Jason Hasty — 06/17/2026
Jason Hasty — Date

Cindy Quiterio — 06/18/2026
Cindy Quiterio — Date

SALARY RANGE ALLOCATIONS FOR CLASSIFIED BARGAINING UNIT MEMBERS

CLASSIFICATION	RANGE	BASIS
Accounting Series		
Project and Accounting Analyst	66	A
Account Analyst	~~60~~**62**	A
Financial Analyst	~~60~~**62**	A
Benefits Analyst	56	A
Lead Payroll Technician	~~51~~**53**	A
Payroll Technician/ Benefits Assistant	49	A
Budget/Accounting Technician	~~48~~**50**	A
Project Accounting Technician	48	A
Accounting Assistant IV	47	A
Payroll Technician	47	A
Employee Benefits Technician	47	A
Accounting Assistant III	45	A
Accounting Assistant II	42	A
Senior School Finance Technician	~~40~~**43**	A, B, E
Accounting Assistant I	33	A
Clerical Series		
Use of Facilities Coordinator/ Senior Administrative Assistant	60	A
Assessment and Accountability Technician	~~56~~**58**	A
Administrative Secretary II	56	A
Special Education Data Systems Technician	52	A
Human Resources Analyst - Certificated	50	A
Human Resources Analyst Classified	~~48~~**50**	A
Facilities Operations and Construction Technician	48	A
District Attendance and Fundraising Technician	46	A
Budget/Program Technician	45	A
Special Education Technician	~~45~~**46**	A
Administrative Secretary I	~~45~~**47**	A
Food Service Operations Technician	~~44~~**46**	A
Facilities Service Assistant	~~44~~**48**	A
Guidance/Program Technician II	44	B,C
School Office Manager- High School	~~43~~**5649**	A
School Office Manager- Middle School	~~43~~**5647**	A
School Office Manager-	~~43~~**49**	C

Adult School		
School Office Manager-	~~43~~**53**~~46~~**46**	A
Children's Center		
School Office Manager-	~~43~~**46**	C
Alternative School		
School Office Manager-	~~51~~**46**	**A**
Elementary School		
School Office Manager-	~~43~~**46**	C
Independent Learning Academy		
School Office Manager-	~~45~~**46**	
Special Programs/Alternative		
Education		
School Office Manager-	~~53~~**46**	
Cont.		
Human Resources Technician	~~43~~ **45**	A
Senior Secretary	42	A, B
Registrar	42	A
Construction & Operations	41	A
Secretary		
Guidance/Program Technician I	~~41~~ **42**	B, C
College/Career Center Technician	41	B, C
School Office Manager-	~~40~~**46**	C
Satellite School		
Senior Attendance Technician	~~39~~**41**	A,B
CTE Technician	38	B,C
Office Technician Continuation	37	C
Counseling Assistant	37	B
Secretary III	37	A,C,D
Office Assistant-	37	C
Adult Education		
Personnel Clerk	37	A
Office Assistant Elementary	~~36~~**40**	C
Office Occupations – Adult Ed	36	D
Attendance Technician	35	C
Secretary II	35	A,C,D
Secretary I	33	A
Food Service Series		
Food Service Utility Driver	42	A,C
Food Service Cook-	41	D
Central Kitchen		
Serving Kitchen Operator	40	D
Food Service Cook	38	A,D
Food Service Assistant	37	D
Barbecue Cook	37	D
Food Service Cashier-Elementary	37	D
Instructional Series		
Educational Interpreter II	62	D
Deaf and Hard of Hearing		

CLASSIFICATION	RANGE	BASIS
Instructional Series (continued)		
Educational Interpreter I- Deaf and Hard of Hearing	55	D
Paraeducator–Severe Behavioral II	47	D
Assistive Technology Technician	47	B
Paraeducator- Environmental Science Park	45	D
Educational Reader- Visually Impaired	45	D
Paraeducator-Severe Behavioral I	45	D
Behavior Intervention Assistant	45	D
Paraeducator-Health Care	41	D
Paraeducator-Severely Impaired	41	D
Paraeducator- At Risk Youth	39	D
Paraeducator -Children's Center II	39	D
Paraeducator- Deaf and Hard Of Hearing (DHH)	39	D
Paraeducator – Special Education	38	C,D
Paraeducator – English Language Learner	37	D
Paraeducator – Adult English Language Development	37	E
Paraeducator – Children's Center	37	A,C,D
Paraeducator – Primary Language Support	37	D
Instructional Resources Assistant	37	D
Paraeducator- Parent Education	36	E
Elementary Physical Education Assistant	36	D
Community Resource Assistant	37	D
Paraeducator	36	D
Volunteer Coordinator	36	D
Paraeducator – Adult Education/ Learning Center	36	E
Auxiliary Services		
Wellness and Behavior Specialist	~~60~~**62**	D
Student Services and Attendance Specialist	~~57~~**59**	A,C
Student Services and Attendance Specialist for Homeless and Foster Youth	~~57~~**59**	A
Health Services Assistant-LVN/RN	56	D
Certified Occupational Therapy Assistant	~~53~~**55**	C
Intervention Specialist for At-Risk Students	53	C,D
Speech-Language Pathology Assistant	~~53~~**55**	D
Children's Center Health Technician	~~45~~**47**	A

CLASSIFICATION	RANGE	BASIS
Auxiliary Series (continued)		
Library Coordinator	41	C
Health Services Assistant	41	D
Career Vocational Assistant	~~40~~**42**	D
Adult School ELL/ Office Specialist III	~~39~~**41**	A,B,E
Senior Textbook Coordinator	~~38~~**40**	A
Adult ELL/Office Specialist II	~~37~~**39**	A,E
Library Coordinator - Elementary	~~36~~**38**	C,D
Campus Supervisor (secondary)	~~36~~**38**	A,D,E
District Office Receptionist	~~36~~**37**	A
Adult School ELL/ Office Specialist I	~~35~~**37**	E
ELD Office Specialist I	~~35~~**37**	D
Adult School Learning Center Technician	~~35~~**37**	E
Campus Supervisor - Elementary School	35	D
Purchasing Series		
Lead Buyer	60	A
Buyer	~~47~~**49**	A
Purchasing Technician	~~45~~**47**	A
Purchasing Clerk	40	A
Operations Series		
1- Grounds Group		
Grounds Leadperson	57	A
Irrigation Specialist	50	A
Integrated Pest Control/ Grounds Technician	48	A
Grounds Technician	43	A
2- Custodian Group		
Swimming Pool Custodian	44	A
Lead Custodian	43	A
Senior Custodian/Campus Supervisor Monterey High School/CDS	39	A
School Safety/Utility Custodian	39	A,C
Custodian	38	A
Utility Custodian	38	A
Children's Center Service Worker	38	A
3-Warehouse Group		
Print Reproduction/Warehouse Worker	47	A
Reprographics Technician	46	A
Lead Warehouse Worker	42	A
Utility Driver	41	A
Warehouse Worker	41	A

CLASSIFICATION	RANGE	BASIS
Maintenance Series		
Facilities Services Leadperson	62	A
Maintenace Leadperson	62	A
Electrician	58	A
HVAC Mechanic	57	A
Plant Engineer	57	A
Low-Voltage Electrician	56	A
Plumber	55	A
Glazier/Carpenter	53	A
Vehicle & Equipment Mechanic	53	A
Locksmith	53	A
Senior Facilities Worker-Plaster/Cement	53	A
Carpenter	52	A
Painter	52	A
Sheet Metal Mechanic	52	A
Roof Repair Technician	52	A
Facilities Worker	46	A
Technology Series		
Lead Information Technology Systems Analyst	72	A
Network Analyst	67	A
Systems Analyst	67	A
Information Technology Systems Analyst	63	A
Lead Technology Support Specialist	61	A
Technology Support Specialist II	60	A
Student Information Systems Analyst	59	A
System Support Specialist	57	A
Adult School Technology Support Specialist II	57	B
User Support Specialist	54	A
Technology Support Specialist I	49	A
Instructional Media Specialist-Middle School	46	B,C
Instructional Technology Media Specialist -Elementary	42	A,C,D

Addendum: The probationary period for a promoted employee shall be six (6) months after the effective date of promotion.

For the Association:

Laura Bauman — 06/17/2026
Laura Bauman — Date

Bobby Martinez — 06/19/2026
Bobby Martinez — Date

Nicole Knoop — 06/17/2026
Nicole Knoop — Date

Hugo Sanchez — 06/18/2026
Hugo Sanchez — Date

Angelica FitzGerald — 06/17/2026
Angelica Fitzgerald — Date

Jessica Sanchez — 06/19/2026
Jessica Sanchez — Date

Reece Hernandez — 06/19/2026
Reece Hernandez — Date

Kailey McDonald — Date

Ian Bolles — 06/18/2026
Ian Bolles — Date

Magali Huerta — 06/18/2026
Magali Huerta — Date

For the District

Jason Hasty — 06/18/2026
Jason Hasty — Date

Cindy Quiterio — 06/18/2026
Cindy Quiterio — Date

H. IMPACT OF PROPOSED AGREEMENT ON SUBSEQUENT YEARS

Combined General Fund MYP

Bargaining Unit: Combined

	Object Code	2025-26 Total Revised Budget After Settlement	2026-27 First Subsequent Year After Settlement	2027-28 Second Subsequent Year After Settlement
REVENUES				
LCFF Revenue	8010-8099	$ 171,000,278	$ 176,169,439	$ 179,551,031
Federal Revenue	8100-8299	$ 8,175,655	$ 8,635,483	$ 8,635,483
Other State Revenue	8300-8599	$ 33,906,558	$ 39,090,683	$ 35,395,744
Other Local Revenue	8600-8799	$ 8,253,625	$ 7,966,080	$ 7,915,547
TOTAL REVENUES		$ 221,336,116	$ 231,861,685	$ 231,497,805
EXPENDITURES				
Certificated Salaries	1000-1999	$ 84,082,646	$ 86,453,861	$ 87,383,428
Classified Salaries	2000-2999	$ 39,332,924	$ 40,122,565	$ 40,692,132
Employee Benefits	3000-3999	$ 51,250,077	$ 52,267,829	$ 52,828,706
Books and Supplies	4000-4999	$ 6,467,317	$ 8,010,822	$ 7,681,490
Services and Other Operating Expenditures	5000-5999	$ 44,372,124	$ 43,925,323	$ 45,039,387
Capital Outlay	6000-6999	$ 1,602,158	$ 81,000	$ 65,000
Other Outgo (excuding Indirect Costs)	7100-7299 7400-7499	$ 2,939,713	$ 1,567,236	$ 1,567,236
Transfers of Indirect Costs	7300-7399	$ (762,431)	$ (1,087,763)	$ (1,087,763)
Other Adjustments			$ -	$ -
TOTAL EXPENDITURES		$ 229,284,528	$ 231,340,873	$ 234,169,615
OTHER FINANCING SOURCES/USES				
Transfers In and Other Sources	8900-8979	$ -	$ -	$ -
Transfers Out and Other Uses	7600-7699	$ 2,000,000	$ 1,750,000	$ 1,750,000
Contributions	8980-8999	$ -	$ -	$ -
OPERATING SURPLUS (DEFICIT)*		$ (9,948,412)	$ (1,229,188)	$ (4,421,810)
BEGINNING FUND BALANCE	9791	$ 48,586,013	$ 38,637,601	$ 37,408,413
Audit Adjustments/Other Restatements	9793/9795	$ -		
ENDING FUND BALANCE		$ 38,637,601	$ 37,408,413	$ 32,986,603
COMPONENTS OF ENDING FUND BALANCE:				
Nonspendable	9711-9719	$ 45,000	$ 45,000	$ 45,000
Restricted	9740	$ 18,820,974	$ 21,848,719	$ 22,291,424
Committed	9750-9760	$ -	$ -	$ -
Assigned	9780	$ 12,833,087	$ 8,521,967	$ 3,572,590
Reserve for Economic Uncertainties	9789	$ 6,938,540	$ 6,992,726	$ 7,077,588
Unassigned/Unappropriated Amount	9790	$ -	$ -	$ (0)

*Net Increase (Decrease) in Fund Balance

NOTE: 9790 amounts must be positive

Burbank Unified School District
Combined

I. IMPACT OF PROPOSED AGREEMENT ON UNRESTRICTED RESERVES

1. State Reserve Standard

		2025-26	2026-27	2027-28
a.	Total Expenditures, Transfers Out, and Uses (Including Cost of Proposed Agreement)	$ 231,284,528	$ 233,090,873	$ 235,919,615
b.	Less: Special Education Pass-Through Funds	$ -	$ -	$ -
c.	Net Expenditures, Transfers Out, and Uses	$ 231,284,528	$ 233,090,873	$ 235,919,615
d.	State Standard Minimum Reserve Percentage for this District **Enter percentage** →	3.00%	3.00%	3.00%
e.	State Standard Minimum Reserve Amount for this District (For districts with less than 1,001 ADA, this is the greater of Line a, times Line b, or $50,000)	$ 6,938,536	$ 6,992,726	$ 7,077,588

2. Budgeted Unrestricted Reserve (After Impact of Proposed Agreement)

a.	General Fund Budgeted Unrestricted Designated for Economic Uncertainties (9789)	$ 6,938,540	$ 6,992,726	$ 7,077,588
b.	General Fund Budgeted Unrestricted Unassigned/Unappropriated Amount (9790)	$ -	$ -	$ -
c.	Special Reserve Fund (Fund 17) Budgeted Designated for Economic Uncertainties (9789)	$ -	$ -	$ -
d.	Special Reserve Fund (Fund 17) Budgeted Unassigned/Unappropriated Amount (9790)	$ -	$ -	$ -
e.	Total Available Reserves	$ 6,938,540	$ 6,992,726	$ 7,077,588
f.	Reserve for Economic Uncertainties Percentage	3.00%	3.00%	3.00%

3. Do unrestricted reserves meet the state minimum reserve amount?

2025-26	Yes	X	No	
2026-27	Yes	X	No	
2027-28	Yes	X	No	

4. If no, how do you plan to restore your reserves?

5. **Does the Total Compensation Increase/(Decrease) on Page 1, Section A, #5 agree with the Total Increase/(Decrease) for all funds as a result of the settlement(s)? Please explain any variance.**

Total Compensation Increase/(Decrease) on Page 1, Section A, #5	$	-
General Fund balance Increase/(Decrease), Page 4c, Column 2	$	-
Adult Education Fund balance Increase/(Decrease), Page 4d, Column 2	$	-
Child Development Fund balance Increase/(Decrease), Page 4e, Column 2	$	-
Cafeteria Fund balance Increase/(Decrease), Page 4f, Column 2	$	-
Other Fund balance Increase/(Decrease), Page 4g, Column 2	$	-
Other Fund balance Increase/(Decrease), Page 4h, Column 2	$	-
Total all fund balances Increase/(Decrease) as a result of the settlement(s)	$	-
Variance	$	-

Variance Explanation:

The Total Compensation Increase shown on Page 1 is recognized in 2026-27 (the first subsequent fiscal year), not in the current year (2025-26). Accordingly, no settlement adjustment is reflected in the current-year fund-impact pages (Page 4, Column 2), and the current-year reconciliation nets to $0. The full fiscal impact of the agreements — approximately $673,468 across all funds, of which approximately $585,630 is General Fund — is

6. **Will this agreement create or increase deficit financing in the current or subsequent years?**
"Deficit Financing" is defined to exist when a fund's expenditures and other financing uses exceed its revenues and other financing sources in a given year. If a deficit is shown below, provide an explanation and any deficit reduction plan, as necessary.

General Fund Combined	Surplus/ (Deficit)	(Deficit) %	Deficit primarily due to:
Current FY Surplus/(Deficit) before settlement(s)?	$(13,919,554)	(6.1%)	Declining enrollment
Current FY Surplus/(Deficit) after settlement(s)?	$ (9,948,412)	(4.3%)	Declining enrollment
1st Subsequent FY Surplus/(Deficit) after settlement(s)?	$ (1,229,188)	(0.5%)	Declining enrollment
2nd Subsequent FY Surplus/(Deficit) after settlement(s)?	$ (4,421,810)	(1.9%)	Declining enrollment

Deficit Reduction Plan (as necessary):

The General Fund reflects ongoing operating deficits both before and after the settlements: approximately $(9.9) million in 2025-26 (Estimated Actuals), $(1.2) million in 2026-27, and $(4.4) million in 2027-28, driven primarily by declining enrollment and the expiration of one-time funds. The agreements add approximately

7. **Were "Other Adjustments" amount(s) entered in the multiyear projections (pages 5a and 5b) for 1st and 2nd Subsequent FY?**

"Other Adjustments" could indicate that a budget reduction plan was/is being developed to address deficit spending, and to rebuild reserves. Any amount shown below must have an explanation. If additional space is needed, attach a separate sheet, or use page 8a.

MYP	Amount	"Other Adjustments" Explanation
1st Subsequent FY Unrestricted, Page 5a	$ -	No separate "Other Adjustments" were layered into the Multiyear Project
1st Subsequent FY Restricted, Page 5b	$ -	
2nd Subsequent FY Unrestricted, Page 5a	$ -	
2nd Subsequent FY Restricted, Page 5b	$ -	

J. CERTIFICATION NO. 1: CERTIFICATION OF THE DISTRICT'S ABILITY TO MEET THE COSTS OF THE COLLECTIVE BARGAINING AGREEMENT

This certification page must be signed by the district's Superintendent and Chief Business Official at the time of public disclosure and is intended to assist the district's Governing Board in determining whether the district can meet the costs incurred under the tentative Collective Bargaining Agreement in the current and subsequent years. The absence of a certification signature or if "I am unable to certify" is checked should serve as a "red flag" to the district's Governing Board.

In accordance with the requirements of Government Code Sections 3540.2 and 3547.5, the Superintendent and Chief Business Official of the Burbank Unified School District hereby certify that the District can meet the costs incurred under this Collective Bargaining Agreement during the term of the agreement from July 1, 2025 to June 30, 2026.

Board Actions

The board actions necessary to meet the cost of the agreement in each year of its term are as follows:

Current Year

Budget Adjustment Categories:	Budget Adjustment Increase/(Decrease)
Revenues/Other Financing Sources	$ 6,984,320
Expenditures/Other Financing Uses	$ 2,284,697
Ending Balance(s) Increase/(Decrease)	$ 4,699,623

Subsequent Years

Budget Adjustment Categories:	Budget Adjustment Increase/(Decrease)
Revenues/Other Financing Sources	$ -
Expenditures/Other Financing Uses	$ 1,346,935
Ending Balance(s) Increase/(Decrease)	$ (1,346,935)

Budget Revisions

If the district does not adopt and submit within 45 days all of the revisions to its budget needed in the current year to meet the costs of the agreement at the time of the approval of the proposed collective bargaining agreement, the county superintendent of schools is required to issue a qualified or negative certification for the district on its next interim report.

Assumptions

See attached page for a list of the assumptions upon which this certification is based.

Certifications

____ I hereby certify ____ I am unable to certify

District Superintendent (Signature)	Date

____ I hereby certify ____ I am unable to certify

Chief Business Official (Signature)	Date

Special Note: The Los Angeles County Office of Education may request additional information, as necessary, to review the district's compliance with requirements.

Burbank Unified School District
Combined

Assumptions and Explanations (enter or attach documentation)

The assumptions upon which this certification is made are as follows:

1. Baseline. The cost of the agreement is measured against the 2025-26 Second Interim Budget (Projected Year Totals, March 5, 2026). The current-year fund-impact pages (4a-4f) bridge the Second Interim to the 2025-26 Estimated Actuals reported in the 2026-27 Adopted Budget.

2. Scope. This combined disclosure covers two tentative agreements. (a) CSEA, Chapter 674 (classified): amends Article 8 (Compensation) with a salary range reallocation for the Accounting, Clerical, Auxiliary, Purchasing, and Technology job families (Exhibit A, averaging ~3.84% for affected unit members) and a pest-control certification stipend (Art. 8.8). (b) Burbank Teachers Association (BTA, certificated): amends Exhibit F (Miscellaneous Salary Rates), principally increasing the Summer School Teacher rate from $53.46 to $66.99 per hour and the Summer School Teacher–Adult Education rate from $54.14 to $66.99 per hour, effective June 1, 2026. Neither agreement includes an across-the-board increase, longevity, or step/column extension. Combined cost ~$673,468 all funds ($497,695 salary + $175,772 benefits): CSEA ~$537,415 all funds (~$449,577 General Fund) and BTA ~$136,053 (General Fund, restricted Special Education summer school). Recognized beginning 2026-27 and continuing into 2027-28; no one-time components.

3. LCFF. Per the 2026-27 Adopted Budget MYP: $176,169,439 (2026-27), +1.92% to $179,551,031 (2027-28), +1.29% (2028-

Form MYP; the settlements are layered on top.

5. Benefits. Current CalPERS, STRS, FICA, Medicare, SUI, and Workers' Compensation rates; a ~38.4% blended load on the CSEA classified salary increment and a ~24.31% load on the BTA certificated (STRS, FICA-exempt) summer-school increment.

6. Contribution. Unrestricted-to-restricted contributions fund the settlements in contributing restricted programs: $37,326 for CSEA (SpEd Res 65000, IDEA Res 33100, RRMA Res 81500) and $71,438 for BTA (Special Education summer school), totaling $108,764.

7. Reserves. The District maintains the State-required 3% minimum Reserve for Economic Uncertainties in the budget year and both subsequent years (3.00% each year) and meets the Criteria and Standards reserve requirement.

MULTIYEAR PROJECTION NARRATIVE: The MYP (Pages 5a-5c) adopts the District's 2026-27 Budget Adoption and Form MYP with both settlements layered into 2026-27 and 2027-28. Combined General Fund ending fund balance: $38.6M (2025-26), $37.4M (2026-27), $33.0M (2027-28). The General Fund shows ongoing operating deficits of ~$(9.9)M, $(1.2)M,

Concerns regarding affordability of agreement in subsequent years (if any):

While available reserves remain at the 3% State minimum in each year, the structural deficit leaves limited cushion above the standard. The District will rely on its Fiscal Stabilization Plan (additional ongoing expenditure reductions, attrition and vacancy management, and revenue enhancements) to sustain the ongoing cost of this agreement and maintain long-term fiscal solvency. These measures will be quantified at subsequent Interim Reports.

H. IMPACT OF PROPOSED AGREEMENT ON SUBSEQUENT YEARS

Restricted General Fund MYP

Bargaining Unit: Combined

	Object Code	2025-26 Total Revised Budget After Settlement	2026-27 First Subsequent Year After Settlement	2027-28 Second Subsequent Year After Settlement
REVENUES				
LCFF Revenue	8010-8099	$ -	$ -	$ -
Federal Revenue	8100-8299	$ 8,175,655	$ 8,635,483	$ 8,635,483
Other State Revenue	8300-8599	$ 27,798,509	$ 33,013,508	$ 29,111,761
Other Local Revenue	8600-8799	$ 6,816,186	$ 6,928,641	$ 6,928,641
TOTAL REVENUES		$ 42,790,350	$ 48,577,632	$ 44,675,885
EXPENDITURES				
Certificated Salaries	1000-1999	$ 17,360,510	$ 17,697,204	$ 17,960,821
Classified Salaries	2000-2999	$ 18,578,705	$ 18,940,071	$ 19,196,212
Employee Benefits	3000-3999	$ 14,965,066	$ 15,348,807	$ 15,562,593
Books and Supplies	4000-4999	$ 4,792,887	$ 6,172,023	$ 5,784,217
Services and Other Operating Expenditures	5000-5999	$ 25,776,704	$ 25,901,002	$ 26,433,474
Capital Outlay	6000-6999	$ 477,166	$ 65,000	$ 65,000
Other Outgo (excluding Indirect Costs)	7100-7299 7400-7499	$ 1,323,171	$ 1,323,171	$ 1,323,171
Transfers of Indirect Costs	7300-7399	$ 894,169	$ 1,320,650	$ 713,621
Other Adjustments			$ -	$ -
TOTAL EXPENDITURES		$ 84,168,378	$ 86,767,928	$ 87,039,109
OTHER FINANCING SOURCES/USES				
Transfers In and Other Sources	8900-8979	$ -	$ -	$ -
Transfers Out and Other Uses	7600-7699	$ -	$ -	$ -
Contributions	8980-8999	$ 45,627,547	$ 41,218,042	$ 42,805,929
OPERATING SURPLUS (DEFICIT)*		$ 4,249,519	$ 3,027,746	$ 442,705
BEGINNING FUND BALANCE	9791	$ 14,571,455	$ 18,820,974	$ 21,848,719
Audit Adjustments/Other Restatements	9793/9795	$ -		
ENDING FUND BALANCE		$ 18,820,974	$ 21,848,719	$ 22,291,424
COMPONENTS OF ENDING FUND BALANCE:				
Nonspendable	9711-9719	$ -	$ -	$ -
Restricted	9740	$ 18,820,974	$ 21,848,719	$ 22,291,424
Committed	9750-9760			
Assigned	9780			
Reserve for Economic Uncertainties	9789	$ -	$ -	$ -
Unassigned/Unappropriated Amount	9790	$ -	$ -	$ -

*Net Increase (Decrease) in Fund Balance

NOTE: 9790 amounts must be positive

Burbank Unified School District
Instructional Services

REPORT TO THE BOARD

TO:	Members of the Board of Education
FROM:	Peter Knapik, Assistant Superintendent of Educational Services Robyn Anders, Director of Instructional Technology & Accountability
PREPARED BY:	Robyn Anders, Director of Instructional Technology & Accountability
SUBMITTED BY:	Laura Erisman, Administrative Secretary
DATE:	June 25, 2026
SUBJECT:	Second Reading of the 2026-2027 Burbank Unified School District Local Control Funding Formula (LCFF) and Local Control and Accountability Plan (LCAP)

Background:

In 2013, the Governor of California proposed full funding flexibility for local school districts called the Local Control Funding Formula (LCFF). Prior to LCFF, California schools were funded through the Revenue Limit System. Revenue limits were created in response to a lawsuit over inequities in funding per pupil based on the relative wealth of each school district. Under revenue limits, each district had a base revenue limit, which was a set dollar amount per pupil. A district's revenue limit entitlement was its base revenue limit multiplied by the number of students attending its schools. The number of students was measured by the district's average daily attendance (ADA). The revenue limit entitlement was funded by local property taxes and state aid. A percentage of the property tax revenue generated by real property located within a district was assigned to the district; state aid made up the difference between a district's entitlement and its property tax revenue. If a district's property tax revenue exceeded its entitlement, it retained these "excess taxes". The sum of the entitlement and any excess taxes were a district's revenue limit funds.

The LCAP is intended to be a comprehensive planning tool. Each LCAP goal must be aligned to one or more of the eight State priorities. The eight State priorities are as follows: Student Engagement, Other Student Outcomes, Parental Involvement, Access to a Broad Curriculum, Common Core State Standards, Basic Services, School Climate, and Student Achievement. There are three sections to the LCAP and each section contains guiding questions that must be addressed, as well. The three LCAP sections are Stakeholder Engagement, Goals and Progress Indicators, and Actions, Services, and Expenditures.

District-Wide Goals for 2025-2026:

1. Students will be career/college ready via high-quality instruction.
2. Students will be physically, emotionally, and mentally healthy.
3. Recruit and retain highly qualified employees.
4. Maintain Efficient and effective operations.

Discussion/Issues:

The Burbank Unified School District's LCAP document has been the result of several months of educational partner input, review of performance metrics, and program data. There have been multiple LCAP Advisory Committee meetings throughout the school year, and progress on the Plan has been discussed at several Board of Education meetings.

On June 18, 2026, the Burbank Unified School District LCAP was submitted for a first reading, as required by Education Code. The District's goal is to have the Board of Education adopt the LCAP on June 25, 2026. The BUSD LCAP will then be submitted to the Los Angeles County Office of Education for approval.

Fiscal Impact:

The fiscal impact on the district will be determined as district goals and school site goals are drafted. The fiscal impact will not exceed the amount budgeted under LCFF or the supplemental grant funding BUSD receives.

Recommendation:

Peter Knapik, Assistant Superintendent of Educational Services, and Robyn Anders, Director of Instructional Technology & Accountability, will facilitate the second reading of the proposed 2026-2027 Burbank Unified School District Local Control Funding Formula (LCFF) and Local Control and Accountability Plan (LCAP) and recommends that the Board of Education approve the 2026-2027 Burbank Unified School District Local Control Funding Formula (LCFF) and Local Control and Accountability Plan (LCAP), as presented.

LCFF Budget Overview for Parents

Local Educational Agency (LEA) Name: Burbank Unified School District

CDS Code: 19643370000000

School Year: 2026-27

LEA contact information: Maricela Salinas

8187294450

School districts receive funding from different sources: state funds under the Local Control Funding Formula (LCFF), other state funds, local funds, and federal funds. LCFF funds include a base level of funding for all LEAs and extra funding - called "supplemental and concentration" grants - to LEAs based on the enrollment of high needs students (foster youth, English learners, and low-income students).

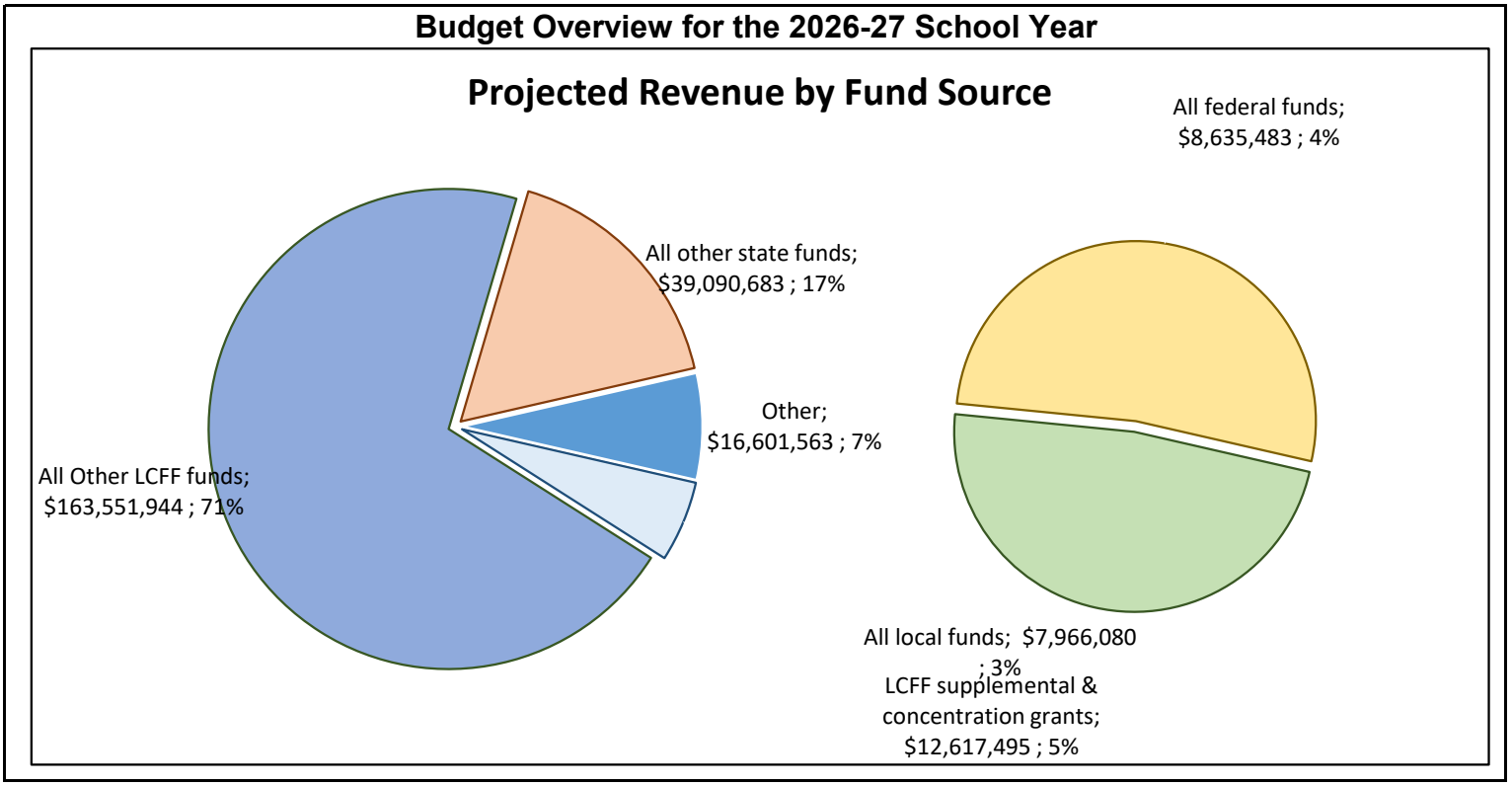

This chart shows the total general purpose revenue Burbank Unified School District expects to receive in the coming year from all sources.

The text description for the above chart is as follows: The total revenue projected for Burbank Unified School District is $231,861,685.00, of which $176,169,439.00 is Local Control Funding Formula (LCFF), $39,090,683.00 is other state funds, $7,966,080.00 is local funds, and $8,635,483.00 is federal funds. Of the $176,169,439.00 in LCFF Funds, $12,617,495.00 is generated based on the enrollment of high needs students (foster youth, English learner, and low-income students).

The LCFF gives school districts more flexibility in deciding how to use state funds. In exchange, school districts must work with parents, educators, students, and the community to develop a Local Control and Accountability Plan (LCAP) that shows how they will use these funds to serve students.

LCFF Budget Overview for Parents

Local Educational Agency (LEA) Name: Burbank Unified School District

CDS Code: 19643370000000

School Year: 2026-27

LEA contact information: Maricela Salinas

8187294450

School districts receive funding from different sources: state funds under the Local Control Funding Formula (LCFF), other state funds, local funds, and federal funds. LCFF funds include a base level of funding for all LEAs and extra funding - called "supplemental and concentration" grants - to LEAs based on the enrollment of high needs students (foster youth, English learners, and low-income students).

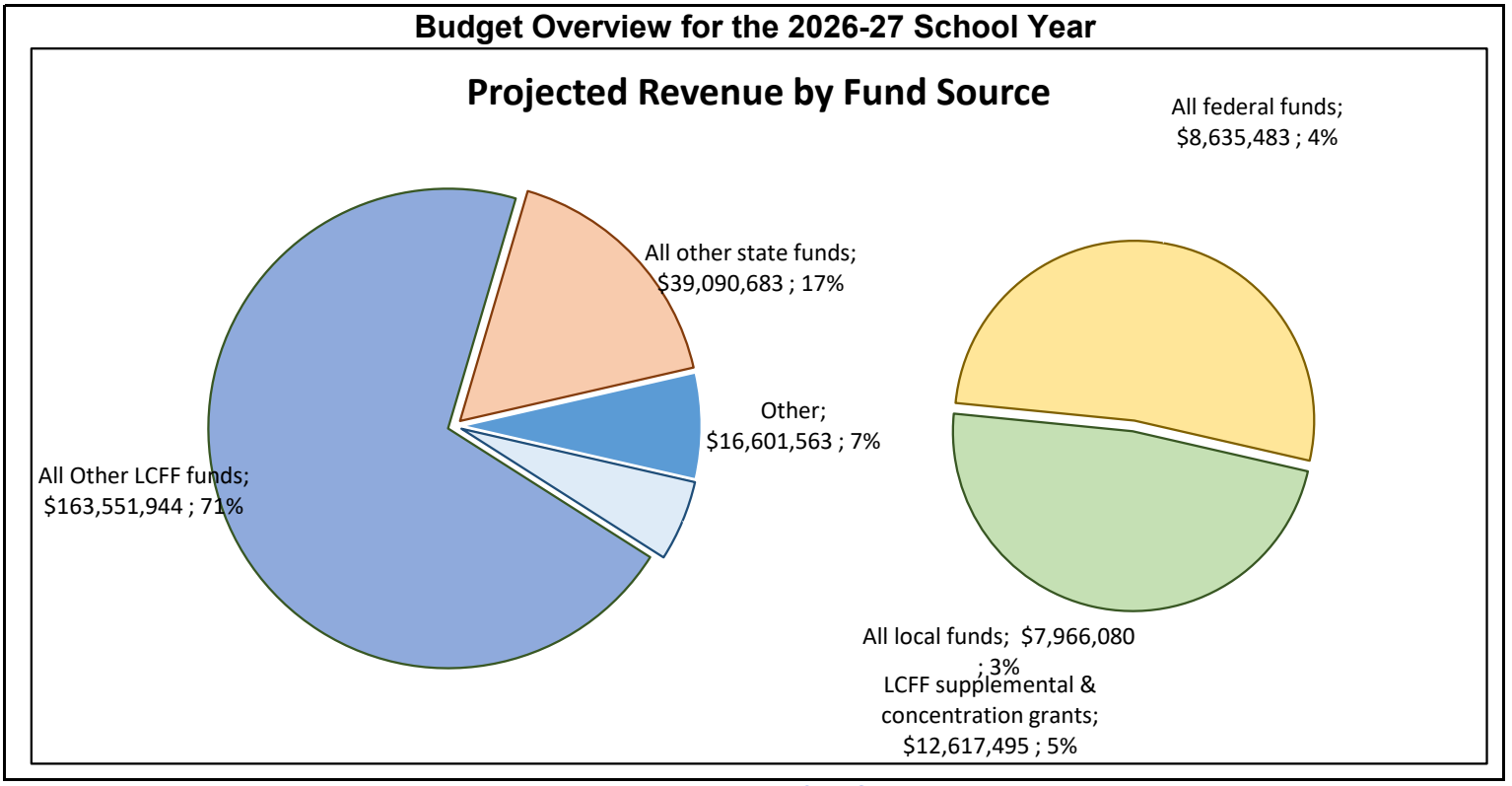

This chart shows the total general purpose revenue Burbank Unified School District expects to receive in the coming year from all sources.

The text description for the above chart is as follows: The total revenue projected for Burbank Unified School District is $231,861,685.00, of which $176,169,439.00 is Local Control Funding Formula (LCFF), $39,090,683.00 is other state funds, $7,966,080.00 is local funds, and $8,635,483.00 is federal funds. Of the $176,169,439.00 in LCFF Funds, $12,617,495.00 is generated based on the enrollment of high needs students (foster youth, English learner, and low-income students).

The LCFF gives school districts more flexibility in deciding how to use state funds. In exchange, school districts must work with parents, educators, students, and the community to develop a Local Control and Accountability Plan (LCAP) that shows how they will use these funds to serve students.

LCFF Budget Overview for Parents

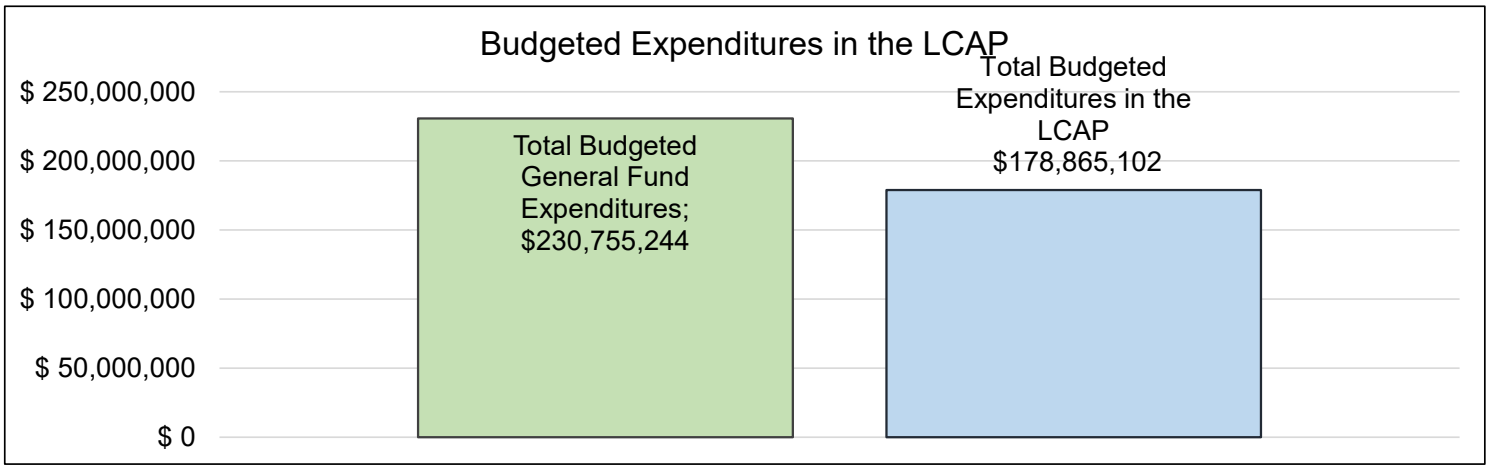

This chart provides a quick summary of how much Burbank Unified School District plans to spend for 2026-27. It shows how much of the total is tied to planned actions and services in the LCAP.

The text description of the above chart is as follows: Burbank Unified School District plans to spend $230,755,243.59 for the 2026-27 school year. Of that amount, $178,865,102.22 is tied to actions/services in the LCAP and $51,890,141.37 is not included in the LCAP. The budgeted expenditures that are not included in the LCAP will be used for the following:

General Fund Budget Expenditures not in included in the LCAP will be primarily used for personnel costs including benefits and retirement contributions for non-certificated staff. Non-certificated includes operations, finance, purchasing, Human Resources, instructional support staff, and office/secretarial staff. Facility and Maintenance Operations staff, including custodians to provide a clean, safe, and secure learning environment for all students is anticipated to cost $7,395,358.

Increased or Improved Services for High Needs Students in the LCAP for the 2026-27 School Year

In 2026-27, Burbank Unified School District is projecting it will receive $12,617,495.00 based on the enrollment of foster youth, English learner, and low-income students. Burbank Unified School District must describe how it intends to increase or improve services for high needs students in the LCAP. Burbank Unified School District plans to spend $12,484,655.22 towards meeting this requirement, as described in the LCAP. The additional improved services described in the plan include the following:

LCFF Budget Overview for Parents

Update on Increased or Improved Services for High Needs Students in 2025-26

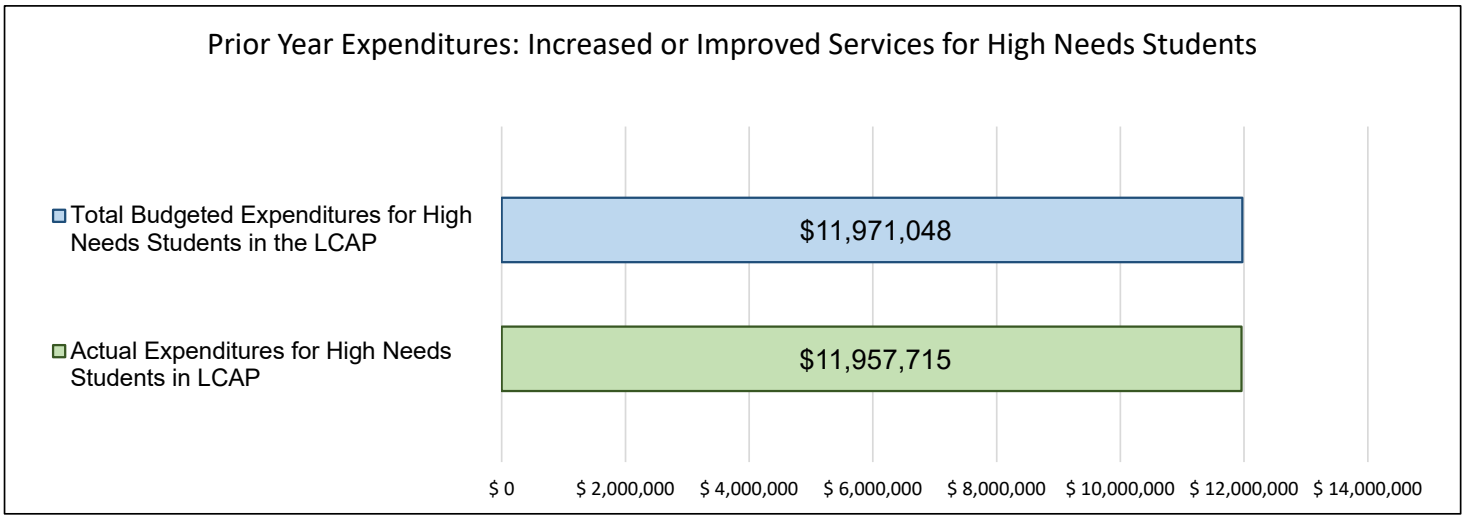

This chart compares what Burbank Unified School District budgeted last year in the LCAP for actions and services that contribute to increasing or improving services for high needs students with what Burbank Unified School District estimates it has spent on actions and services that contribute to increasing or improving services for high needs students in the current year.

The text description of the above chart is as follows: In 2025-26, Burbank Unified School District's LCAP budgeted $11,971,047.79 for planned actions to increase or improve services for high needs students. Burbank Unified School District actually spent $11,957,715.00 for actions to increase or improve services for high needs students in 2025-26. The difference between the budgeted and actual expenditures of $13,332.79 had the following impact on Burbank Unified School District's ability to increase or improve services for high needs students:

The total estimated actual expenditures for actions and services to increase or improve services for high needs students in 2025-26 ($11,957,715) were within approximately $13,333 (0.1%) of the budgeted amount ($11,971,048). All planned actions and services were implemented as described in the LCAP, and this minor difference did not have a material impact on the District's ability to increase or improve services for unduplicated students. (2025-26 amounts are estimated actuals from the Second Interim Report and will be finalized at year-end.)

Local Control and Accountability Plan

The instructions for completing the Local Control and Accountability Plan (LCAP) follow the template.

Local Educational Agency (LEA) Name	Contact Name and Title	Email and Phone
Burbank Unified	Robyn Anders Director of Instructional Technology & Accountability	robynanders@burbankusd.org 8187294517

Plan Summary 2026-2027

General Information

A description of the LEA, its schools, and its students in grades transitional kindergarten-12, as applicable to the LEA. LEAs may also provide information about their strategic plan, vision, etc.

The Burbank Unified School District serves the community of Burbank, a separate municipality with its own independent government and services. Burbank is located in the San Fernando Valley and is surrounded by Los Angeles, Hollywood, and North Hollywood. The Burbank Unified School District provides a comprehensive, balanced educational program from Transitional Kindergarten through Grade 12, providing a standards-based curriculum that supports basic skills development and concept development while addressing individual differences and needs. The district is governed by a five-member Board of Education and served by central administrative staff. A diverse and culturally enriched student population attends eleven TK-5 elementary schools, three middle schools, two comprehensive high schools, and a continuation school. In addition, the district offers childcare programs, several special education alternative programs, an Independent Learning Academy (independent study program), a continuation school, and an adult school. The total school enrollment for Burbank Unified School District is 13,820. A variety of socioeconomic and demographic backgrounds make up the Burbank community. BUSD students are 49.8% Caucasian (including Armenian, European, and Middle Eastern), 31.0% Hispanic/Latino, 4.6% Asian, 2.9% Filipino, 1.6% African American, 0.2% American Indian, 0.1% Pacific Islander, 6.4% multiple races, and 3.5% declined to state their ethnicity. BUSD has a significant percentage of students with disabilities, which equates to 14.89% special needs. The following is the summary of student counts for each unduplicated student group:
- Socioeconomically Disadvantaged 4,866 35.2%
- English Learners 1,794; 11.9%
- Foster Youth 13 students; 0.1%
- Students Experiencing Homelessness 70 students; 0.5%

In Burbank, multiple languages are spoken, with the top four being English, Armenian, Spanish, Russian, Ukrainian, and Arabic. Funding remains low due to declining enrollment and the lack of an active parcel tax.
The LCAP Plan addresses the Eight State Priorities through the actions and metrics described in this plan. State of California Priorities:
Priority One: Basic (Conditions of Learning)
Priority Two: State Standards (Conditions of Learning)
Priority Three: Parental Involvement (Engagement)
Priority Four: Pupil Achievement (Pupil Outcomes)
Priority Five: Pupil Engagement (Engagement)
Priority Six: School Climate (Engagement)
Priority Seven: Course Access (Conditions of Learning)
Priority Eight: Other Pupil Outcomes (Pupil Outcomes)

No schools in the Burbank Unified School District receive LCFF Equity Multiplier funds.

BUSD Goals for 2024-2027
1. Students will be career/college ready via high-quality instruction of State Standards as measured by State, federal, and District assessment tools, including the California Dashboard.
2. Students will be physically, emotionally, and mentally healthy and supported through Parental Involvement as measured by State, federal, and District assessment tools, including the California Dashboard.
3. Recruit and retain quality employees as measured by full employment of teaching staff with appropriate credentials and placed in appropriate assignments.
4. Efficient and effective operations as measured by appropriate facilities, especially classrooms that are conducive to the needs of the instructional program.

Reflections: Annual Performance

A reflection on annual performance based on a review of the California School Dashboard (Dashboard) and local data.

Based on a review of the 2025 California School Dashboard and local data, the Burbank Unified School District (BUSD) is proud of its historical and ongoing academic progress. The data highlights significant milestones in student achievement, sustained areas of strength, and systemic improvements across multiple indicators.
Greatest Progress and Successes BUSD has demonstrated notable growth and sustained high performance across key academic and engagement metrics:
English Language Arts (ELA): Student achievement in ELA remains a relative strength for the District. Historically earning a "Green" status (2017–2019) and a "High" rating (2022–2023), this positive trend has been well-maintained, resulting in a "Green" performance tier on both the 2024 and 2025 Dashboards.
Mathematics: The District has made measurable academic gains in Mathematics. After receiving a "Medium" rating in 2022–2023 and a "Yellow" status in 2024, BUSD successfully improved its Mathematics performance to a "Green" status on the 2025 Dashboard.
Graduation Rates: High school graduation remains a standout success for BUSD. Traditionally maintaining a "Green" status, the District elevated this metric to the highest "Blue" tier in 2024 (96.3%) and continued to grow in 2025, achieving an impressive 97.4% graduation rate. BUSD considers this 97.4% completion rate a major indicator of our educational program's overall success. Crucially, the graduation rate for several key student groups—including English Learners, Hispanic students, and Socioeconomically Disadvantaged students—has steadily improved over the past three years.
College and Career Readiness: BUSD has made significant strides in preparing students for post-secondary success. The District's College and Career Indicator improved from a "Yellow" status in 2024 (50.6% prepared) to a "Green" status in 2025, with 55.2% of students identified as prepared.
Contributing Factors to Our Success. The improvements in graduation rates and College and Career measures can be directly attributed to targeted, strategic actions implemented by the District, including:
Robust academic and behavioral intervention programs at the middle school level.
Comprehensive credit recovery programs are offered during the academic year and summer. An evolving summer school program focused on credit recovery, alongside targeted initial credit course offerings.
The expansion of Career Technical Education (CTE) pathways in media, medical, and engineering fields.
Increased access to dual enrollment courses in partnership with the local community college.
Identified Challenges and Ongoing Needs. While BUSD celebrates these achievements, the District recognizes that maintaining high performance requires continuous effort, fidelity of implementation, and a focus on areas that still require growth. To build upon our successes, BUSD has identified the following areas of focus for the 2026-2027 LCAP cycle:
Targeted Growth Areas: The District must continue to monitor and support English Learner proficiency (as measured by the ELPAC), continue to reduce Chronic Absenteeism, lower Suspension rates, and provide robust mental and emotional health supports for all students.
Systemic Fidelity: Achieving sustained success requires a staff that is highly trained, well-informed, and equipped to carry out their responsibilities. Implementation of academic programs and wrap-around supports must be executed with fidelity and a strong sense of purpose.
Continuous Monitoring and Expectations: School and District administrators will continue to rigorously monitor student achievement, staff performance, and parental involvement on a daily basis. Furthermore, the Board of Education remains committed to staying informed and setting high expectations for the performance of staff, parents, and students alike.
2023 Dashboard

The following district sub-groups received the lowest performance level on one or more state indicators on the 2023 dashboard:

- Foster Youth Students in Academic Performance in English Language Arts and Mathematics.
- Students with Disabilities in Academic Performance in English Language Arts

The following schools received the lowest performance level on one or more state indicators on the 2023 dashboard:

College and Career Indicator:
- All Students at Monterey High School
Chronic Absenteeism Indicator:
- All students at Independent Learning Academy
- All students at John Muir Middle School
- All students at Walt Disney Elementary School
Suspension Indicator
- All students at Burbank Community Day School
- All students at Monterey High School

The following school sub-groups received the lowest performance level on one or more state indicators on the 2023 dashboard:

Academic Performance in the English Language Arts Indicator:
- English Learners at Dolores Huerta Middle School
- Students with Disabilities at Dolores Huerta Middle School
- Students with Disabilities at Luther Burbank Middle School
Academic Performance in the Mathematics Indicator:
- English Learners at Burbank High School
- English Learners at Dolores Huerta Middle School
- Students with Disabilities at Dolores Huerta Middle School
English Learner Progress Indicator:
- English Learners at George Washington Elementary School
College and Career Indicator:
- Hispanic Students, Socio-Economically Disadvantaged Students, and White Students at Monterey High School
Chronic Absenteeism Indicator:
- Asian Students, Hispanic Students, Students with Disabilities, and Socio-Economically Disadvantaged students at Joaquin Miller Elementary
- English Learners, Hispanic students, Socio-Economically Disadvantaged, Students with Disabilities, and White students at John Muir Middle School
- Hispanic students at R. L. Stevenson Elementary School
- Students with Disabilities at Ralph Emerson Elementary School
- Hispanic and Socio-Economically Disadvantaged Students at Thomas Jefferson Elementary School
- English Learners and Students with Disabilities at Thomas Edison Elementary School
- English Learners, Hispanic, Socio-Economically Disadvantaged, Students with Disabilities and White students at Walt Disney Elementary School
- White students at William McKinley Elementary School
Suspension Indicator:
- African American students and Students with Disabilities at Burbank High School
- Socio-Economically Disadvantaged students at Burroughs High School
- Hispanic and Socio-Economically Disadvantaged at Dolores Huerta Middle School
- Hispanic and White students at Monterey High School

2024 Dashboard

The following district sub-groups received the lowest performance level on one or more state indicators on the 2024 dashboard:
- Long Term English Learners in English Language Arts, Mathematics, Suspension Rate, and Chronic Absenteeism
- Foster Youth Students in Suspensions.
- Students experiencing homelessness in Mathematics

- Students with Disabilities in Academic Performance in English Language Arts

The following schools received the lowest performance level on one or more state indicators on the 2024 dashboard:

College and Career Indicator:
- All Students at Monterey High School
Chronic Absenteeism
- All students at Independent Learning Academy
Mathematics Performance
- All students at Independent Learning Academy
English Language Arts Performance
- All students at Independent Learning Academy
English Learner Progress Indicator
- All students at John Burroughs High School
- All students at Independent Learning Academy

The following school sub-groups received the lowest performance level on one or more state indicators on the 2024 dashboard:

Academic Performance in the English Language Arts Indicator:
- English Learners at Burbank High School
- Long-Term English Learners at John Muir Middle School
- Students with Disabilities at Bret Harte Elementary School
- Students with Disabilities at Burbank High School
- Students with Disabilities at John Burroughs High School
- Students with Disabilities at Luther Burbank Middle School
- Students with Disabilities at William McKinley Elementary School
Academic Performance in the Mathematics Indicator:
- English Learners, Socioeconomically Disadvantaged, Students with Disabilities, Hispanic, and White students at Burbank High School
- Socioeconomically Disadvantaged and White students at Independent Learning Academy
- English Learners at Dolores Huerta Middle School
- Long-Term English Learners at John Muir Middle School
English Learner Progress Indicator:
- English Learners at Independent Learning Academy
- English Learners at John Burroughs High School
College and Career Indicator:
- Hispanic Students and Socio-Economically Disadvantaged Students at Monterey High School
Chronic Absenteeism Indicator:
- Long-Term English Learners at John Muir Middle School
- Students with Disabilities at Ralph Emerson Elementary School
Suspension Indicator:
- English Learners at Dolores Huerta Middle School

2025 Dashboard

The following district sub-groups received the lowest performance level on one or more state indicators on the 2025 dashboard:
Long-Term English Learners in Science.
Foster Youth Students in Suspension Rate.
Students experiencing homelessness in Chronic Absenteeism
Students with Disabilities in Academic Performance in English Language Arts and Mathematics

The following schools received the lowest performance level on one or more state indicators on the 2024 dashboard:

Suspension Rate
All students at Monterey High School

The following school sub-groups received the lowest performance level on one or more state indicators on the 2024 dashboard:

Academic Performance in the English Language Arts Indicator:
English Learners at Burbank High and Dolores Huerta MS
Students with Disabilities at Burbank High, John Burroughs High, Dolores Huerta MS, George Washington ES, and Luther Burbank MS
Academic Performance in the Mathematics Indicator:
English Learners at Dolores Huerta MS
Socioeconomically Disadvantaged Students at Burbank High
Students with Disabilities at Burbank High, John Burroughs High, Dolores Huerta MS, George Washington ES, Luther Burbank MS
White students at Burbank High School
English Learner Progress Indicator:
Long-Term English Learners at Burbank High
Chronic Absenteeism Indicator:
English Learners at Dolores Huerta MS and Luther Burbank MS
Socioeconomically Disadvantaged students at Dolores Huerta MS
Students with Disabilities at John Muir MS, Luther Burbank MS, and Thomas Edison ES
Suspension Indicator:
English Learners at Dolores Huerta MS
Hispanic students at Burbank High and Monterey High
Socioeconomically Disadvantaged students at Monterey High
Students with Disabilities at Burbank High and Dolores Huerta MS

Improving services for the lowest performing subgroups

The following action items will specifically improve services for all district and school subgroups with the lowest performance level in the Academic Performance in the English Language Arts Indicator - specifically, students with disabilities and English learners at multiple sites:
- Goal 1 Action Item 9: Professional Development Day Costs for All Teachers
- Goal 1 Action Item 20: Culturally Responsive Pedagogy Professional Development.

The following action items will specifically improve services for all district and school subgroups with the lowest performance level in the Academic Performance in Mathematics Indicator - specifically, students with disabilities, English learners, socioeconomically disadvantaged, and white students at multiple sites:
- Goal 1 Action Item 6: Secondary Designated ELD Teachers
- Goal 1 Action Item 9: Professional Development Day Costs for All Teachers
- Goal 1 Action Item 20: Culturally Responsive Pedagogy Professional Development

The following action items will specifically improve services for Long-Term English Learners at all school sites for Science:
Goal 1 Action Item 3: Elementary ELD Instructional Assistants
Goal 1 Action Item 10: Elementary Response to Intervention Reading/Language Arts and Math
Goal 1 Action Item 20: Culturally Responsive Pedagogy Professional

The following action items will specifically improve services for the English Language Learner Development at Burbank High School and other sites:
- Goal 1 Action Item 6: Secondary Designated ELD Teachers
- Goal 1 Action Item 19: Secondary ELD Instructional Aides

Other Sites
- Goal 1 Action Item 2: Elementary ELD Specialists
- Goal 1 Action Item 3: Elementary ELD Instructional Assistants
- Goal 1 Action Item 10: Elementary Response to Intervention Reading/Language Arts and Math

The following action items will specifically target English Learners, Students with Disabilities, Socioeconomically Disadvantaged, and Homeless students at multiple sites
- Goal 1 Action Item 10: Elementary Response to Intervention Reading/Language Arts and Math
- Goal 1 Action Item 11: Middle School Psychologists
- Goal 1 Action Item 16: Professional Development for Twice Exceptional Students
- Goal 1 Action Item 20: Culturally Responsive Pedagogy Professional Development
- Goal 2 Action Item 1: Monterey Continuation High School Teachers
- Goal 2 Action Item 2: FSA School-Based Counseling
- Goal 2 Action Item 3: Secondary Credit Recovery
- Goal 2 Action Item 5: Student Services Attendance Specialist Foster/Homeless
- Goal 2 Action Item 7: SOAR Program Staff

The following action items will specifically improve services for suspension rates at Monterey High School, as well as Students with Disabilities, Socioeconomically Disadvantaged, Hispanic students, English Learners, and Foster youth at multiple sites:
- Goal 1 Action Item 20: Culturally Responsive Pedagogy Professional Development
- Goal 2 Action Item 1: Monterey Continuation High School Teachers
- Goal 2 Action Item 2: FSA School-Based Counseling
- Goal 2 Action Item 3: Secondary Credit Recovery
- Goal 2 Action Item 7: SOAR Program Staff

Based on the previously identified results, Burbank Unified School District previously prioritized the need to address chronic absenteeism across all schools and sites, specifically the schools and subgroups identified in 2023. Chronic absenteeism rates have increased during the pandemic and distance learning, and the return to in-person instruction. They increased to 34.6% in 2021-22 (an increase of 27.9%) after dropping to 6.7% before the pandemic, and were reported at 19.7% on the 2022 Dashboard. The current districtwide rate for chronic absenteeism is 11.8%. As the ramifications of the pandemic diminish, we've seen this continue to decline; however, this will be a long-term area of focus.

Mathematics historically is an area for growth. The 2022 Dashboard shows BUSD students scoring 19.1 points below standard on average, and the 2023 Dashboard shows BUSD students scoring 19 points below the standard. The 2025 Dashboard shows all students at 16.5 points below standard. CAASPP results show students in testing grades as 45.56% Meeting or Exceeding the Standard. Mathematics curriculum and instruction are being addressed through focused professional development on standards, the core curriculum, instructional practices, monitoring, credit recovery, and interventions. There is also professional learning community (PLC) work being done by grade levels and departments. "D" and "F" rates are being closely monitored, and when needed, an intervention section or assistance is provided. Additionally, BUSD has actively participated in a Math Collaborative through CAL-ED Partners and is seeing initial signs of progress as D and F rates in High School Algebra I continue to decrease year after year.

Services supporting ELA, such as interventions, will need to be maintained and refocused so that significant student subgroups need remediation; specifically, students with disabilities at specific schools. Additionally, Long-Term English Learners need support as metrics indicated a decrease in reclassified students in2020-2021 during distance learning, as noted in our Goal 1 & 2 Metrics.

During the 2025-2026 school year, the LCAP Advisory Committee, DELAC Parent Advisory Committee, Superintendent's Cabinet, District Leadership Team, and Principals reviewed the planned expected annual measurable outcomes (AMO) outlined in our 2025-2026 LCAP with historical and current data available, including the California School Dashboard and locally collected data through grade reports, diagnostic assessments, and benchmark assessments. Additionally, the committees determined the effectiveness of each service provided and identified strengths, progress, gaps, and areas needing improvement. We specifically looked at any schools, district subgroups, and school subgroups with the lowest performance level on California Dashboard indicators.

Burbank Unified School District (BUSD) expended all original Learning Recovery Emergency Block Grant (LREBG) funds from the first allocation prior to the 2025-2026 school year, with zero LREBG expenditures occurring in 2025-2026. The recent reallocation of unspent funds will be utilized in the 2026-2027 and 2027-2028 LCAP plans. These funds will directly support Goal 1: Students will be career/college ready via high-quality instruction of State Standards as measured by State, federal, and District assessment tools, including the California Dashboard. Specifically, Action 9 (Professional Development) will be increased in implementation and effectiveness by expanding upon pre-existing professional development offerings.
Alignment with Allowable LREBG Uses: In accordance with California Education Code Section 32526, this action directly aligns with the CDE's allowable uses for LREBG

funds. Expanding Professional Development addresses Allowable Use #2 (Accelerating progress to close learning gaps through educator training and collaborative planning/PLCs) and Allowable Use #3 (Integrating pupil supports by providing staff training on attendance and behavioral interventions to ensure a safe, inclusive learning environment).
Addressing the Local Needs Assessment: To ensure these funds target the most critical areas of need, BUSD conducted the Title IIA and Title IV Needs Assessment among instructional staff and educational partners. This needs assessment included the use of LREBG Funds. The survey data strongly validated the need to expand specific professional development areas. Based on the assessment results:
Professional Learning Communities (PLCs): Staff overwhelmingly indicated that structured collaboration (such as "Grade Level Collaboration," "Department Collaboration," and "District-wide articulation") is a High Priority. Expanding PLCs will provide educators with the dedicated time needed to analyze data and plan targeted instruction.
Targeted Support for Vulnerable Populations: The needs assessment highlighted a critical demand for expanded training to meet the needs of the district's lowest-performing student groups, specifically Students with Disabilities and Low-Income students. Furthermore, because BUSD has identified more than 30 students as Long-Term English Learners (LTELs), a significant focus of this expanded professional development will be tailored toward language acquisition strategies and interventions for LTELs, ensuring compliance with state requirements. Additional investment of LREBG funds in Action 1.9 Professional Development for Staff will increase training and Professional Development for LTEL populations. Existing actions such as 1.3 and 1.19, which include ELD instructional aides, have been specifically identified to include all relevant staff for accurate accounting and implementation of current ELD programming, as well as new supplemental curriculum across secondary ELD classrooms.
Attendance and Behavior: As identified in the "Safe and Healthy Schools" section of the survey, respondents consistently ranked "Aggressive Behavior Prevention" and "School-Based Mental Health/Conflict Resolution" as High Priority areas. Consequently, training to support students with attendance and behavior issues will now be provided district-wide to all staff.
Metrics for Monitoring Impact: To fulfill the LREBG statutory requirement of monitoring the impact of funded actions, BUSD will measure the effectiveness of this professional development expansion (Goal 1, Action 9) using the following metrics over the 26-27 and 27-28 school years:
Academic Progress: Percentage of Students with Disabilities, Low-Income students, and English Learners scoring "Meets or Exceeds Standards" on the ELA and Math CAASPP.
LTEL Progress: English Learner Reclassification Rate and progress toward English proficiency on the ELPAC.
Behavior and Climate: District-wide Chronic Absenteeism Rates and Suspension Rates.
These metrics, in addition to the existing metrics identified to measure the success of our professional development programs, will be incorporated to review the overall success of Action 9 as well as the expansion of this effort with LREBG Funds.

Reflections: Technical Assistance

As applicable, a summary of the work underway as part of technical assistance.

Although Burbank Unified is not eligible for Year 1 Differentiated Assistance under the 2025 California Dashboard, the district is eligible for Year 2 Differentiated Assistance support under the 2024 California Dashboard. Specifically, the district is eligible for support for the following student group: Long-Term English Learners (LTELs) in ELA & Math (Priority #4) and LTELs in Chronic Absenteeism and Suspension Rate (Priority #6).

As part of receiving technical assistance, Burbank Unified has engaged in purposeful planning to address these dashboard indicators and better support our LTEL students. The district is taking the following strategic actions:
Targeted Supplemental Curriculum: We are purchasing a new, specialized supplemental curriculum explicitly designed for our English Language Development (ELD) courses.
Vertical Articulation and Sequencing: This new curriculum provides a vertically articulated, sequential learning pathway designed to guide students more effectively through the language acquisition process.

Accelerating Academic Achievement (Priority #4): By strategically supplementing our existing core English Language Arts (ELA) instruction, this curriculum provides LTELs with greater opportunities to progress toward reclassification. It ensures they are equipped with the foundational skills necessary to be successful in transitional and mainstream ELA classrooms.

Improving Engagement and School Climate (Priority #6): Providing curriculum that is accessible, sequentially supportive, and highly relevant increases student academic confidence and engagement. This targeted academic support acts as a critical lever in reducing frustration-driven behavioral incidents (suspensions) and increasing overall

school connectedness (reducing chronic absenteeism).

Implementation and LCAP Alignment To ensure the successful rollout of this new curriculum in the 2026–2027 school year, the district will strategically leverage existing LCAP actions to provide comprehensive support:
Professional Development (Action 1.9): This action will directly support implementation by providing dedicated professional development opportunities for staff to master the new supplemental curriculum.

Instructional Assistant Support (Actions 1.3 and 1.19): This rollout is highly coordinated with our existing actions funding ELD Instructional Assistants at both the elementary (Action 1.3) and secondary (Action 1.19) levels. Both certificated staff and instructional aides will be trained on the new supplemental materials. This ensures that the curriculum can be seamlessly and effectively utilized not only in designated ELD classrooms but also in general education classrooms that contain clusters of English Learner students.

Comprehensive Support and Improvement

An LEA with a school or schools eligible for comprehensive support and improvement must respond to the following prompts.

Schools Identified

A list of the schools in the LEA that are eligible for comprehensive support and improvement.

NA

Support for Identified Schools

A description of how the LEA has or will support its eligible schools in developing comprehensive support and improvement plans.

NA

Monitoring and Evaluating Effectiveness

A description of how the LEA will monitor and evaluate the plan to support student and school improvement.

NA

Engaging Educational Partners

A summary of the process used to engage educational partners in the development of the LCAP.

School districts and county offices of education must, at a minimum, consult with teachers, principals, administrators, other school personnel, local bargaining units, parents, and students in the development of the LCAP.

Charter schools must, at a minimum, consult with teachers, principals, administrators, other school personnel, parents, and students in the development of the LCAP.

An LEA receiving Equity Multiplier funds must also consult with educational partners at schools generating Equity Multiplier funds in the development of the LCAP, specifically, in the development of the required focus goal for each applicable school.

Educational Partner(s)	Process for Engagement
Burbank Community	Website, Newsletters, Public Meetings, Recordings of Public Meetings, Presentation Materials, and Translation of meetings and materials. September 25, October 23, & December 4, 2025; January 29 and February 26, 2026: DELAC LCAP Presentations & Discussions December 10, 2025: PAC LCAP Overview & Budget Update January 14, 2026: Superintendent's Budget Advisory Committee January 20, 2026: Superintendent's Budget Advisory Committee January 21, 2026: PAC LCAP Goals & Metrics January 27, 2026: Superintendent's Budget Advisory Committee February 3, 2026: Superintendent's Budget Advisory Committee February 10, 2026: Superintendent's Budget Advisory Committee February 11, 2026: PAC LCAP Budget Update February 12, 2026: Board of Education Mid-Year Update February 23, 2026: Superintendent's Budget Advisory Committee
Burbank Unified Parents of Students	Website, Newsletters, Public Meetings, Survey, Recordings of Public Meetings, Presentation Materials, and Translation of meetings and materials. September 25, October 23, & December 4, 2025; January 29 and February 26, 2026: DELAC LCAP Presentations & Discussions December 10, 2025: PAC LCAP Overview & Budget Update January 14, 2026: Superintendent's Budget Advisory Committee January 20, 2026: Superintendent's Budget Advisory Committee January 21, 2026: PAC LCAP Goals & Metrics January 27, 2026: Superintendent's Budget Advisory Committee February 3, 2026: Superintendent's Budget Advisory Committee February 10, 2026: Superintendent's Budget Advisory Committee February 11, 2026: PAC LCAP Budget Update February 12, 2026: Board of Education Mid-Year Update February 23, 2026: Superintendent's Budget Advisory Committee
Burbank Unified Teachers	Website, Newsletters, Public Meetings, Survey, Recordings of Public Meetings, Presentation Materials, and Translation of meetings and materials. September 25, October 23, & December 4, 2025; January 29 and February 26, 2026: DELAC LCAP Presentations & Discussions January 14, 2026: Superintendent's Budget Advisory Committee January 20, 2026: Superintendent's Budget Advisory Committee January 27, 2026: Superintendent's Budget Advisory Committee February 3, 2026: Superintendent's Budget Advisory Committee February 10, 2026: Superintendent's Budget Advisory Committee February 23, 2026: Superintendent's Budget Advisory Committee April 27, 2026: Superintendent's Budget Advisory Committee
Burbank Unified Students	Website, Newsletters, Public Meetings, Survey, Recordings of Public Meetings, Presentation Materials, and Translation of meetings and

	materials. Key presentation and review dates included: January 14, 2026: Superintendent's Budget Advisory Committee January 20, 2026: Superintendent's Budget Advisory Committee January 27, 2026: Superintendent's Budget Advisory Committee February 3, 2026: Superintendent's Budget Advisory Committee February 10, 2026: Superintendent's Budget Advisory Committee February 23, 2026: Superintendent's Budget Advisory Committee April 27, 2026: Superintendent's Budget Advisory Committee
Burbank Unified Staff	Website, Newsletters, Public Meetings, Survey, Recordings of Public Meetings, Presentation Materials, and Translation of meetings and materials. Key presentation and review dates included: January 14, 2026: Superintendent's Budget Advisory Committee January 20, 2026: Superintendent's Budget Advisory Committee January 27, 2026: Superintendent's Budget Advisory Committee February 3, 2026: Superintendent's Budget Advisory Committee February 10, 2026: Superintendent's Budget Advisory Committee February 23, 2026: Superintendent's Budget Advisory Committee April 27, 2026: Superintendent's Budget Advisory Committee
Burbank Unified Bargaining Units	Individual Meeting with Superintendent and district leadership, Website, Newsletters, Public Meetings, Survey, Recordings of Public Meetings, Presentation Materials, and Translation of meetings and materials. Key presentation and review dates included: January 14, 2026: Superintendent's Budget Advisory Committee January 20, 2026: Superintendent's Budget Advisory Committee January 27, 2026: Superintendent's Budget Advisory Committee February 3, 2026: Superintendent's Budget Advisory Committee February 10, 2026: Superintendent's Budget Advisory Committee February 23, 2026: Superintendent's Budget Advisory Committee April 27, 2026: Superintendent's Budget Advisory Committee
Burbank Unified Principals	Regular Meetings with Superintendent and district leadership, Website, Newsletters, Public Meetings, Survey, Recordings of Public Meetings, Presentation Materials, and Translation of meetings and materials. Principal Meetings are held on the first (Elementary), third (Secondary), and fourth (All Principals) Wednesday of every month.
District English Learner Advisory Committee (DELAC)	Presentations and an agenda item at all calendared DELAC Meetings. Website, Newsletters, Public Meetings, Survey, Recordings of Public Meetings, Presentation Materials, and Translation of meetings and materials.

	Key presentation and review dates included: September 25, October 23, & December 4, 2025; January 29 and February 26, 2026: DELAC LCAP Presentations & Discussions
District Administrative Leadership (Cabinet)	Regular Meetings with Superintendent and district leadership, Website, Newsletters, Public Meetings, Recordings of Public Meetings, Presentation Materials, and Translation District Cabinet meets weekly on Tuesday mornings.
Consultation with the SELPA	Provided a copy of plan and accompanying presentations. Responded in writing to feedback. May - June 2026
ASB Student Representatives	Website, Newsletters, Public Meetings, Survey, Recordings of Public Meetings, Presentation Materials, and Translation of meetings and materials.
Superintendent's Budget Advisory Committee	Meetings, Agendas, Emails, and presentations Key presentation and review dates included: January 14, 2026: Superintendent’s Budget Advisory Committee January 20, 2026: Superintendent’s Budget Advisory Committee January 27, 2026: Superintendent’s Budget Advisory Committee February 3, 2026: Superintendent’s Budget Advisory Committee February 10, 2026: Superintendent’s Budget Advisory Committee February 23, 2026: Superintendent’s Budget Advisory Committee April 27, 2026: Superintendent’s Budget Advisory Committee

A description of how the adopted LCAP was influenced by the feedback provided by educational partners.

Overview of the Engagement Process The Burbank Unified School District (BUSD) utilized an inclusive and collaborative approach to involve educational partners in the 2026-2027 LCAP adoption process. This comprehensive engagement strategy ensured that the LCAP was genuinely informed by representatives with a wide range of interests, ideas, and perspectives. Throughout the 2025-2026 school year, the District held numerous public meetings, including three general session LCAP Parent Advisory Group meetings, four District English Learner Advisory Committee (DELAC) meetings, and three public meetings with the Board of Education.
The engagement plan included multiple routes of communication to ensure broad participation. District staff consulted with local bargaining units (Burbank Teachers Association and the California State Employees Association), school site principals, certificated and classified personnel, and district administrators. To gather student perceptions and increase engagement, the LCAP budget and process were presented to the Associated Student Body (ASB) programs at both comprehensive high schools (John Burroughs High School and Burbank High School). Furthermore, the District held targeted discussions with parents of homeless children to better understand their specific needs, and the Superintendent presented the LCAP to the district PTA. Furthermore, SELPA reviewed the LCAP to ensure provisions for Special Needs Students were accurately reflected, with suggestions memorialized before the first reading.
Transparency and Accessibility To foster a democratic and transparent process, all general session LCAP meetings were live-streamed via Zoom and recorded. These recordings, along with all presentations, budget documents, and handouts, were archived on the BUSD website. To ensure accessibility for all families, including those who could not attend live meetings, materials were translated into Spanish and Armenian. Questions and answers from these sessions were provided both live and in writing, and posted publicly online.
Meeting dates and materials were advertised extensively via the District’s website, BUSD eNEWS notifications, electronic invitations sent to the entire school community (staff, parents, and high school students), and regular communications from site principals.
Advisory Groups and Meeting Timeline The District’s LCAP Parent Advisory Groups—the General Public LCAP Advisory Group and the DELAC— met eight times during the 2025-2026 school year. Participants included parents of English Language Learners, Socioeconomically Disadvantaged students, Reclassified English Learners, Foster Youth, and GATE students, representing a diverse range of ethnic, racial, and unduplicated student subgroups.

Key presentation and review dates included:
September 25, October 23, & December 4, 2025; January 29 and February 26, 2026: DELAC LCAP Presentations & Discussions
December 10, 2025: PAC LCAP Overview & Budget Update
January 14, 2026: Superintendent's Budget Advisory Committee
January 20, 2026: Superintendent's Budget Advisory Committee
January 21, 2026: PAC LCAP Goals & Metrics
January 27, 2026: Superintendent's Budget Advisory Committee
February 3, 2026: Superintendent's Budget Advisory Committee
February 10, 2026: Superintendent's Budget Advisory Committee
February 11, 2026: PAC LCAP Budget Update
February 12, 2026: Board of Education Mid-Year Update
February 23, 2026: Superintendent's Budget Advisory Committee
April 27, 2026: Superintendent's Budget Advisory Committee
June 4, 2026: First Reading of the LCAP (Public Hearing)
June 25, 2026: Second Reading and Formal LCAP Adoption
At each meeting, detailed qualitative and quantitative data were provided. This allowed partners to analyze the extent to which existing services and budgets were effectively meeting the needs of targeted student groups.
Influence of Feedback on the Adopted LCAP Educational partner feedback fundamentally shaped the development, priorities, and budget allocations of the 2026-2027 LCAP. The timely provision of data allowed partners to evaluate program efficacy and advocate for necessary adjustments, fostering a strong sense of trust and distributed leadership. A primary theme that emerged from educational partner feedback was the support for increases and improved services for BUSD's growing English Learner population, as well as the commitment made to bolster site-level behavioral and wellness interventions. Based on collaborative analysis and consensus among the advisory groups, the District maintained its four original goals but made significant reallocations to the supplemental budget to directly reflect community priorities.
Actions Removed or Reduced Based on the 25-26 Plan: Focus was put on evaluating the changes made for the 2025-26 school year and the effectiveness of those changes in the LCAP:
Secondary Summer School
Hanover Research Group Work
DEI Consultant
Elementary Curriculum Specialists (2.0 FTE)
Elementary Intervention Specialists (11.0 FTE)
Elementary Response to Intervention Funds
Interpretation Services/Translator Funds
DEI Collaboration Time for School Leads
ELD Instructional Supports for Staff and Materials (one-time)
Actions Added or Augmented in 25-26: Additional support was given in 25-26 to support student wellness, behavioral needs, and experiential learning:
Addition of Elementary Assistant Principals (2.0 FTE)
Addition of Elementary Wellness & Behavior Specialists (3.0 FTE)
Addition of Elementary Behavior Interventionists (7.0 FTE)
Funding support for the Outdoor Science School
Through comprehensive meetings, discussions, and presentations with a wide variety of educational partners, Burbank Unified School District engaged in a thorough evaluation of all actions within the LCAP. Particular focus was placed on assessing the major programmatic and budgetary changes implemented during the 2025-2026 school year to determine their overall effectiveness and their specific contribution toward increasing and improving services for our identified student populations. Based on this collaborative review, the determination was that these recent changes have been successful and are working as anticipated to support student needs. Consequently, educational partners agreed to "stay the course" with the current actions and budget allocations for the 2026-2027 school year. The District and its partners will conduct a more detailed and exhaustive re-evaluation of all initiatives during the 2026-2027 school year to chart the course for the upcoming new three-year LCAP cycle. Ultimately, this inclusive, data-informed dialogue culminated in a 2026-2027 LCAP that was fully supported by the Board of Education and formally approved on June 25, 2026.

Goals and Actions

Goal

Goal #	Description	Type of Goal
1	Students will be career/college ready via high-quality instruction of State Standards as measured by State, federal, and District assessment tools including the California Dashboard. (Instrucitonal Services) State of California Priorities: Priority One: Basic (Conditions of Learning) Priority Two: State Standards (Conditions of Learning) Priority Three: Parental Involvement (Engagement) Priority Four: Pupil Achievement (Pupil Outcomes) Priority Five: Pupil Engagement (Engagement) Priority Seven: Course Access (Conditions of Learning)	Broad Goal

State priorities addressed by this goal.

2, 1, 4, 5, 7, 3

An explanation of why the LEA has developed this goal.

The goal of BUSD is to provide the highest quality instruction of the California State Standards that leads students to success in career choices and college readiness.

Goal 1 was established based on multiple sources of data: CAASPP scores, California Dashboard indicators, graduation data (district data and Dashboard data), A through G completion rates.

The intention of creating this goal is to ensure that students are given State Standards driven curriculum and that teachers are properly trained in order to effectively deliver instruction in an appropriate manner. Additionally, it is important for the District to provide access to the curriculum for all learners.

Goal 1 focuses on English Learners, Foster Youth, Homeless and Students with Disabilities, and students who are gifted. The targeted subgroups need access to appropriate materials, access to courses and curriculum, the highest quality instruction, and access to interventions and support including not only academic but social-emotional. Similarly, these targeted subgroups will benefit from smaller class size environments when appropriate. Goal 1 is designed to meet these needs of the targeted subgroups, with the understanding that the school district will monitor the following areas to evaluate progress towards goals:

Reclassification rates ELPAC results for English Learners
CAASPP Data for ELs, SEDs, SWDs, Foster Youth, Homeless Students, and Hispanic Students
Graduation Rates for ELs, SEDs, SWDs, Foster Youth, Homeless Students, and Hispanic Students

The reason the goal was established is based on data. Graduation data is good district-wide, but there are discrepancies with subgroup data, which needs attention. The current Dashboard shows gaps in performance for ELs and SED students, despite a relatively good score overall. Similarly, we have seen the same gap in A through G completion and CAASPP data. Part of the impetus for this goal was also to ensure that these subgroups were receiving full access to courses and curriculum. More importantly, instructional materials needed to be appropriate for these groups.

The goal addresses good first teaching. When students are not being successful, the goal addresses Response to Intervention at the elementary level and intervention sections at the secondary level. Additionally, the goal addresses a robust design for students to have opportunities in the summer for elementary reteaching and expansion of knowledge and in secondary credit recovery. There are also opportunities for students to maintain their skill level during the summer so they are not losing their academic skills.

As a school of choice, the Independent Learning Academy (ILA) is an opportunity for students to access core classes on APEX Learning, which is an online platform. This allows students more flexible schedules to pursue other goals such as the Junior Olympics, or acting and modeling careers. In some cases, the ILA has been an opportunity for students to engage in their academic learning online because they suffer from various phobias or social disorders.

The focus for Burbank Unified is good first instruction. Therefore, the intention of this goal is to ensure the students in Burbank encounter a curriculum and materials that are aligned with State Standards. It is also important for instruction to be differentiated so that student's needs are being met. Therefore, professional development becomes critical to ensure the most effective delivery of instruction, appropriate methods for checking for understanding, and methods of reteaching differently to meet the needs of students who did not get it the first time.

A focus for this goal includes technology. Not just access to more technology, but the integration of technology into lesson plans that will engage students in the learning process. Similarly, the district continues to endorse Kagan strategies and offers teachers many point of access to be trained during the regular school year.

Goal 1 focuses on:

- Mastery of State Standards
- Professional development for Kagan Classroom technology training
- Professional development time to ensure assessments and lessons are standards aligned
- Google classroom
- Core curriculum online resources

Access to arts and music education is a passion in Burbank. Goal 1 is intended to keep our district focused on our commitment to art and music education and to maintain services that are already currently in place while creating a plan to expand further. Over the last couple of years, the District has created a strategic master plan for art and music education which is captured in the Burbank Arts for All Master Plan.

The following items are paramount to goal 1:

- Maintain current ratios of students to teachers for music instruction in grades 2 through 5
- Maintain 1600 instructional minutes per year in music instruction for a student in grades 4 and 5
- Maintain 1200 instructional minutes per year of music instruction for students in grades 2 and 3
- Continue to increase the number of visual and performing arts courses offered in grades 9 through 12

In summary, Goal 1 is designed to meet all these needs, with the understanding that the school district will monitor the following areas to evaluate progress toward meeting the action items:

CAASPP data for All Students and Subgroups
Graduation data for All Students and Subgroups
Dropout Rate for High School Students
A through G data AP data for High School Students
D and F Rates for Middle and High School Students
Credit recovery data for High School Students
Teacher Credentialing and Appropriate Assignments (Williams Compliance)
Textbooks and Instructional Materials (Williams Compliance)

Measuring and Reporting Results

Metric #	Metric	Baseline	Year 1 Outcome	Year 2 Outcome	Target for Year 3 Outcome	Current Difference from Baseline
1	Percent of All Students who score Exceeds or Meet Standards on the English Language Arts CAASPP will increase by 3 percentage points over 3 years	In 2022-2023, 58.43% of All Students scored Exceeds or Meets Standards on the English Language Arts CAASPP	In 2023-2024, 56.38% of All Students scored Exceeds or Meets Standards on the English Language Arts CAASPP	In 2024-2025, 58.02% of All Students scored Exceeds or Meets Standards on the ELA CAASPP. 51.94% in 3rd Grade for ELA is now also being monitored as 3rd-grade literacy proficiency is a new/additoinal instructional goal.	All Students who Exceed or Meet Standards on the English Language Arts CAASPP will increase by 3 percentage points by year 3.	The percentage of all students who scored Exceed or Meet Standards on the English Language Arts CAASPP declined by 0.41%.

2	Percent of English Learners Exceeding or Meeting Standards on English Language Arts CAASPP will increase by 3 percentage points over 3 years	In 2022-2023, 13.41% of English Learners scored Exceeds or Meets Standards on the English Language Arts CAASPP. 8.11% of Long-Term English Learners Met or Exceeded Standard on the English Language Arts CAASPP	In 2023-2024, 14.09% of English Learners scored Exceeds or Meets Standards on the English Language Arts CAASPP 2.0% of Long-Term English Learners Met or Exceeded Standard on the English Language Arts CAASPP	In 2024-2025, 15.99% of English Learners scored Exceeds or Meets Standards on the English Language Arts CAASPP 13.21% of Long-Term English Learners Met or Exceeded Standard on the English Language Arts CAASPP.	English Learners scoring Exceeds or Meets Expectations on the English Language Arts CAASPP will increase by 3 percentage points by year 3.	The percentage of English Learners who scored Exceed or Meet Standards on the English Language Arts CAASPP increased by 2.58%. The percentage of Long-Term English Learners who scored Exceed or Meet Standards on the English Language Arts CAASPP increased by 5.1%.
3	Percent of Socioeconomically Disadvantaged Students Exceeding or Meeting Standards on the English Language Arts CAASPP will increase by 3 percentage points over 3 years	In 2202-20223, 47.15% of Socioeconomically Disadvantaged scored Exceeds or Meets Standards on the English Language Arts CAASPP.	In 2023-2024, 43.15% of Socioeconomically Disadvantaged scored Exceeds or Meets Standards on the English Language Arts CAASPP.	In 2024-2025, 43.82% of Socioeconomically Disadvantaged scored Exceeds or Meets Standards on the ELA CAASPP. 38.34% in 3rd Grade for ELA (Added based on the introduction of district instructional goals).	Socioeconomically Disadvantaged students who score Exceeds or Meets Standards on English Language Arts CAASPP will increase by 3 percentage points by year 3.	The percentage of Socioeconomically Disadvantaged students who scored Exceed or Meet Standards on the English Language Arts CAASPP declined by 3.33%.

4	Percent of Homeless Students Exceeding or Meeting Standards on the English Language Arts CAASPP will increase by 3 percentage points over 3 years	In 2022-2023, 42.86% of Homeless Students scored Exceeds or Meets Standards on the ELA CAASPP	In 2023-2024, 25.00% of Homeless Students scored Exceeds or Meets Standards on the ELA CAASPP	In 2024-2025, 45.16% of Homeless Students scored Exceeds or Meets Standards on the ELA CAASPP	Homeless Students scoring Exceeds or Meets Expectations on the English Language Arts CAASPP will increase by 3 percentage points by year 3.	The percentage of students experiencing homelessness who scored Exceed or Meet Standards on the English Language Arts CAASPP increased by 2.3%.
5	Percent of Foster Youth Students who score Exceeds or Meets Standards on the Mathematics CAASPP will increase by 3 percentage points over 3 years	In 2022-2023, NA% of Foster Students scored Exceeds or Meets Standards on the English Language Arts CAASPP	In 2023-2024, NA% of Foster Students scored Exceeds or Meets Standards on the English Language Arts CAASPP	In 2024-2025, NA% of Foster Students scored Exceeds or Meets Standards on the English Language Arts CAASPP	Foster students scoring Exceeds or Meets Expectations on the English Language Arts CAASPP will increase by 3 percentage points by year 3.	The percentage of students in foster care who scored Exceed or Meet Standards on the English Language Arts CAASPP had no change.

6	Percent of Students with Disabilities Exceeding or Meeting Standards on the English Language Arts CAASPP will increase by 3 percentage points over 3 years	In 2022-2023, 27.31% of Students with Disabilities scored Exceeds or Meets Standards on the English Language Arts CAASPP	In 2023-2024, 25.62% of Students with Disabilities scored Exceeds or Meets Standards on the English Language Arts CAASPP	In 2024-2025, 23.47% of Students with Disabilities scored Exceeds or Meets Standards on the English Language Arts CAASPP	Students with Disabilities who exceed or meet standards on the English Language Arts CAASPP will increase by 3 percentage points by year 3.	The percentage of students with Disabilities who scored Exceed or Meet Standards on the English Language Arts CAASPP declined by 3.84%.
7	Percent of Hispanic students Exceeding or Meeting Standards on the English Language Arts CAASPP will increase by 3 percentage points over 3 years	In 2022-2023, 47.49% of Hispanic students scored Exceeds or Meets Standards on the English Language Arts CAASPP	In 2023-2024, 46.64% of Hispanic students scored Exceeds or Meets Standards on the English Language Arts CAASPP	In 2024-2025, 48.15% of Hispanic students scored Exceeds or Meets Standards on the English Language Arts CAASPP	Hispanic students who meet Exceed or Meet Standards on the English Language Arts CAASPP will increase by 3 percentage points over 3 years.	The percentage of Hispanic students who scored Exceed or Meet Standards on the English Language Arts CAASPP increased by 0.66%.

8	Percent of Twice Exceptional (GATE & UDP) students Exceeding or Meeting Standards on the English Language Arts CAASPP will increase by 3 percentage points over 3 years	In 2022-2023, 93.8% of Twice Exceptional studentss scored Exceeds or Meets Standards on the English Language Arts CAASPP	In 2023-2024, 91.0% of Twice Exceptional students scored Exceeds or Meets Standards on the English Language Arts CAASPP	In 2024-2025, 90.0% of Twice Exceptional students scored Exceeds or Meets Standards on the English Language Arts CAASPP	Twice Exceptional (GATE & UDP) students who Exceed or Meet Standards on the English Language Arts CAASPP will increase by 3 percentage points by year 3.	The percentage of Twice Exceptional students who scored Exceed or Meet Standards on the English Language Arts CAASPP declined by 3.8%.
9	Percent of All Students who score Exceeds or Meets Standards on the Mathematics CAASPP will increase by 3 percentage points over 3 years	In 2022-2023, 44.40% of All Students scored Exceeds or Meets Standards on the Mathematics CAASPP	In 2023-2024, 43.46% of All Students scored Exceeds or Meets Standards on the Mathematics CAASPP	In 2024-2025, 46.56% of All Students scored Exceeds or Meets Standards on the Mathematics CAASPP. Grade 6 – 42.97%; Grade 7 – 45.82%; Grade 8 - 41.57% Grade-level proficiency in MS Math is being closely monitored as it is a new/additional instructional goal.	All Students who Exceed or Meet Standards on the Mathematics CAASPP will increase by 3 percentage points by year 3.	The percentage of All students who scored Exceed or Meet Standards on the Mathematics CAASPP increased by 2.16%.

10	Percent of English Learners who score Exceed and Meet Standards of the Math CAASPP will increase by 3 percentage points over 3 years	In 2022-2023, 15.14% of English Learner students scored Exceed and Meet Standards of the Math CAASPP 1.3% of Long-Term English Learner students scored Exceed and Meet Standards of the Math CAASPP	In 2023-2024, 16.57% of English Learner students scored Exceed and Meet Standards of the Math CAASPP 0.0% of Long-Term English Learner students scored Exceed and Meet Standards of the Math CAASPP	In 2024-2025, 21.41% of English Learner students scored Exceed and Meet Standards of the Math CAASPP 1.89% of Long-Term English Learner students scored Exceed and Meet Standards of the Math CAASPP	English Learners who Exceed or Meet Standards on the Math CAASPP will increase by 3 percentage points by year 3.	The percentage of English Learner students who scored Exceed or Meet Standards on the Mathematics CAASPP increased by 6.27%. The percentage of Long-Term English Learner students who scored Exceed or Meet Standards on the Mathematics CAASPP increased by 0.59%.
11	Percent of Socioeconomically Disadvantaged Students Exceeding or Meeting Standards on Math CAASPP will increase by 3 percentage points over 3 years	In 2022-2023, 19.06% of Socioeconomically Disadvantaged Students scored exceeds or Meets standards on the Mathematics CAASPP	In 2023-2024, 31.26% of Socioeconomically Disadvantaged Students scored Exceeds or Meets Standards on the Math CAASPP (The previous year/baseline was 32.74% for Socioeconomically Disadvantaged Students (22-23).	In 2024-2025, 33.74% of Socioeconomically Disadvantaged Students scored Exceeds or Meets Standards on the Math CAASPP; Grade 6 – 28.58%; Grade 7 – 35.70%; Grade 8 – 25.00% Grade-level proficiency in MS Math is being closely monitored as it is a new/additional instructional goal.	Socioeconomically Disadvantaged Students who exceed or meet standards on the Mathematics CAASPP will increase by 3 percentage points by year 3.	The percentage of Socioeconomically Disadvantaged students who scored Exceed or Meet Standards on the Mathematics CAASPP increased by 14.68%.

12	Percent of Homeless Students Exceeding or Meeting Standards on the Mathematics CAASPP will increase by 3 percentage points over 3 years	In 2022-2023, 28.58% of Homeless Students scored Exceeds or Meets Standards on the Mathematics CAASPP	In 2023-2024, 39.28% of Homeless Students scored Exceeds or Meets Standards on the Mathematics CAASPP	In 2024-2025, 35.48% of Homeless Students scored Exceeds or Meets Standards on the Mathematics CAASPP	Homeless Students Exceeding or Meeting Standards on the Mathematics CAASPP will increase by 3 percentage points by year 3.	The percentage of students experiencing homelessness who scored Exceed or Meet Standards on the Mathematics CAASPP increased by 6.9%.
13	Percent of Foster Youth Students who score Exceeds or Meets Standards on the Mathematics CAASPP will increase by 3 percentage points over 3 years	In 2022-2023, NA% of Foster Students scored Exceeds or Meets Standards on the Mathematics CAASPP	In 2023-2024, NA% of Foster Students scored Exceeds or Meets Standards on the Mathematics CAASPP	In 2024-2025, NA% of Foster Students scored Exceeds or Meets Standards on the Mathematics CAASPP	Foster Youth Students who score Exceeds or Meets Standards on the Mathematics CAASPP will increase by 3 percentage points by year 3.	The percentage of students in foster care who scored Exceed or Meet Standards on the Mathematics CAASPP remained unchanged.
14	Percent of Students with Disabilities that Exceed or Meet Standards on the Mathematics CAASPP will increase by 3 percentage points over 3 years	In 2022-2023, 19.06% of Students with Disabilities scored exceeds or Meets standards on the Mathematics CAASPP	In 2023-2024, 20.89% of Students with Disabilities scored exceeds or Meets standards on the Mathematics CAASPP	In 2024-2025, 20.00% of Students with Disabilities scored exceeds or Meets standards on the Mathematics CAASPP	Students with Disabilities that Exceed or Meet Standards on the Mathematics CAASPP will increase by 3 percentage points by year 3.	The percentage of students with disabilities who scored Exceed or Meet Standards on the Mathematics CAASPP increased by 0.94%.

15	Percent of Hispanic students who Exceed or Meet Standards on the Mathematics CAASPP will increase by percentage points over 3 years	In 2022-2023 30.18% of Hispanic students scored Exceeds or Meets Standards on the Mathematics CAASPP	In 2023-2024, 30.12% of Hispanic students scored Exceeds or Meets Standards on the Mathematics CAASPP	In 2024-2025, 32.51% of Hispanic students scored Exceeds or Meets Standards on the Mathematics CAASPP	The percent of Hispanic students who meet Exceed or Meet Standards on the Mathematics CAASPP will increase by 3 percentage points by year 3.	The percentage of Hispanic students who scored Exceed or Meet Standards on the Mathematics CAASPP increased by 2.33%.
16	Percent of Twice Exceptional (GATE & UDP) students who score Exceeds or Meets Standards on the Mathematics CAASPP will increase by 3 percentage points over 3 years.	In 2022-2023, 91.4% Twice Exceptional students scored Exceeds or Meets Standards on the Mathematics CAASPP	In 2023-2024, 90.0% of Twice Exceptional students scored Exceeds or Meets Standards on the Mathematics CAASPP	In 2024-2025, 91.0% of Twice Exceptional students scored Exceeds or Meets Standards on the Mathematics CAASPP	Twice Exceptional (GATE & UDP) students who Exceed or Meet Standards on the Mathematics CAASPP will increase by 3 percentage points by year 3.	The percentage of twice exceptional students who scored Exceed or Meet Standards on the Mathematics CAASPP declined by 0.4%.

17	Percent of English Learners making progress towards English language proficiency as reported on the California Dashboard will increase by 3 percentage points over 3 years	In 2022-2023, 57.7% of English Learners making progress towards English language proficiency as reported on the California Dashboard	In 2023-2024, 59.4% of English Learners made progress towards English language proficiency as reported on the California Dashboard 52.2% of Long-Term English Learners are making progress towards English language proficiency as reported on the California Dashboard	In 2024-2025, 58.8% of English Learners made progress towards English language proficiency as reported on the California Dashboard 46.2% of Long-Term English Learners are making progress towards English language proficiency as reported on the California Dashboard	English Learners making Progress on the ELPAC will increase by 3 percentage points by year 3.	English Learners making progress towards English language proficiency increased by 1.1% Long-Term English Learners making progress towards English language proficiency decreased by 6.0%
18	Percent of English Learners being reclassified as determined by the Reclassification Rate will meet or exceed previous annual rate or at least pass the State reclassification rate	In 2022-2023, 20.7% of English Learners were reclassified	In 2023-2024, 12.67% of English Learners were reclassified	In 2024-2025, 13.7% of English Learners were reclassified	Maintain or increase the reclassification rate of English Learners.	The percentage of English Learners who were reclassified decreased by 7.0%

19	Percent of fully credential teachers in grades Transitional Kindergarten through Grade 12 will be maintained	In 2021-2022, the following was reported on the CDE TAMO Report: Clear - 88.7% Out-of-Field - 2.7% Intern - 0.5% Ineffective - 1.7% Incomplete - 6.1% Unknown - 0.3% In 2022-2023, BUSD anticipates having 42 Out-of-Field Teacher (Local Assignment Approval by Board), 5 Ineffective Teacher (emergency permit, waiver), 29 Inexperienced Teacher (2 years or less)	In 2022-2023, the following was reported on the CDE TAMO Report: Clear - 87.5%; Out-of-Field - 3.7%; Intern - 0.6%; Ineffective - 4.6%; Incomplete - 3.5%; Unknown - 0.1%	In 2023-2024, the following was reported on the CDE TAMO Report: Clear - 83.8%; Out-of-Field - 4.3%; Intern - 1.0%; Ineffective - 6.8%; Incomplete - 4.1%; Unknown - 0.0%	Maintain or increase percentage of teachers who are fully credentialed per teaching assignment	The percentage of fully credentialed teachers in grades Transitional Kindergarten through Grade 12 decreased by 4.9%. Out-of-Field increased by 1.6%. Intern increased by 0.5%. Ineffective increased by 5.1%. Incomplete decreased by 2.0%. Unkown decreased by 0.3%.
20	Graduation Rate for All Students will increase by 1 percentage point over 3 years as reported on the California Dashboard.	In 2022-2023 93.2% of All Students were graduated from high school	In 2023-2024, the District-wide graduation rate was 96.3% for all students.	In 2024-2025, the District-wide graduation rate was 97.4% for all students.	All Students who are graduated from high school will increase by 1 percentage point by year 3.	The District-wide graduation rate for all students increased by 4.2%

21	Graduation Rate of English Learners will increase by 3 percentage points over 3 years as reported on the California Dashboard.	In 2022-2023, 80.6% of English Learners were graduated from high school	In 2023-2024, 91.3% of English Learners graduated	In 2024-2025, 95.6% of English Learners graduated	All English Learners who are graduated from high school will increase by 3 percentage points by year 3.	The graduation rate of English Learners increased by 15.0%
22	Graduation Rate of Socio-Economically Disadvantaged Students will increase by 2 percentage points over 3 years as reported on the California Dashboard.	In 2022-2023, 91.0% of Socio-economically Disadvantaged Students were graduated from high school	In 2023-2024, 95.1% of Socio-economically Disadvantaged Students graduated	In 2024-2025, 95.5% of Socio-economically Disadvantaged Students graduated	Socio-economically Disadvantaged Students who are graduated from high school will increase by 2 percentage points by year 3.	The graduation rate of Socio-Economically Disadvantaged Students increased by 4.5%
23	Graduation Rate for Homeless Students will increase by 1 percentage points over 3 years as reported on the California Dashboard.	In 2022-2023, 90.9% of Homeless Students were graduated from high school	In 2023-2024, 85.2% of Homeless Students graduated	In 2024-2025, 95.2% of Homeless Students graduated	Homeless Students who are graduated from high school will increase by 1 percentage point by year 3.	The graduation rate for Homeless Students increased by 4.3%

24	Graduation Rate for Foster Youth will increase by 1 percentage point over 3 years as reported on the California Dashboard.	In 2022-2023 NA% of Foster Youth were graduated from high school (Subgroup too small to report)	In 2023-2024 NA% of Foster Youth graduated	In 2024-2025 NA% of Foster Youth graduated from high school (Subgroup too small to report)	Foster Youth who are graduated from high school will increase by 1 percentage point by year 3.	The graduation rate for Foster Youth remains unchanged.
25	Graduation Rate for Students with Disabilities will increase by 2 percentage points over 3 years as reported on the California Dashboard.	In 2022-2023, 88.3% of Students with Disabilities were graduated from high school	In 2023-2024, 88.3% of Students with Disabilities graduated	In 2024-2025, 89.8% of Students with Disabilities graduated	Students with Disabilities who are graduated from high school will increase by 2 percentage points by year 3.	The graduation rate for Students with Disabilities increased by 1.5%
26	Graduation Rate for Hispanic Students will increase by 1 percentage point over 3 years as reported on the California Dashboard.	In 2022-2023, 94.0% of Hispanic Students were graduated from high school	In 2023-2024, 96.0% of Hispanic Students graduated	In 2024-2025, 97.0% of Hispanic Students graduated	Hispanic Students who are graduated from high school will increase by 1 percentage point by year 3.	The graduation rate for Hispanic Students increased by 3%

27	Percent of "D" and "F" Grade Rate in Middle School and High School will decrease by 3 percentage points over 3 years as reported through our student information system (AERIES).	Fall of 2023 - 7.7% of middle school grades were a "D" or "F" Spring of 2024 - 8.14% of middle school grades were a "D" or "F" Fall of 2023 - 11.2% of high school grades were a "D" or "F" Spring of 2024 - 12.05% of high school grades were a "D" or "F"	Fall of 2024 - 7.22% of middle school grades were a "D" or "F" Spring of 2025 - 8.29% of middle school grades were a "D" or "F" Fall of 2024 - 11.3% of high school grades were a "D" or "F" Spring of 2025 - 12.67% of high school grades were a "D" or "F"	Fall of 2025 - 6.63% of middle school grades were a "D" or "F" Spring of 2026 - 7.62% of middle school grades were a "D" or "F" Fall of 2025 - 10.21% of high school grades were a "D" or "F" Spring of 2026 - 11.72% of high school grades were a "D" or "F"	Middle school and high school students who earn a "D" or "F" grade in Spring and Fall will decrease by 3 percentage points by year 3.	Fall of 2024 - middle school "D" or "F" grades decreased by 1.07% Spring of 2025 - middle school "D" or "F" grades decreased by 0.52% Fall of 2024 - high school "D" or "F" grades decreased by 0.99% Spring of 2025 - high school "D" or "F" grades decreased by 0.33%
28	Drop-Out Rate will decrease or be maintained	In 2022-2023, the High School Drop- Out Rate was 1.4% (CDE no longer calculates the dropout rate; however, the District will calculate using a combination of our student information system and CALPADS).	In 2023-2024, the High School Drop- Out Rate was 1.01%	In 2024-2025, the High School Drop- Out Rate was 0.8%	Maintain or decrease the percent of students who Drop-Out of High School	The High School Drop-Out Rate decreased by 0.6%

29	Percentage of students completing the A-G requirements. The completion rate will increase by 2% percentage points per year until students reach the highest level of performance as reported on the California Dashboard.	In 2022-2023 48.0% of high school students met A-G completion rate	In 2023-2024 47.1% of high school students met A-G completion requirements	In 2024-2025, 49.2% of high school students met A-G completion requirements	All students who meet A-G requirements will increase by 6 percentage points by year 3.	The percentage of students completing the A-G requirements increased by 1.2%
30	Percentage of Secondary Student Credit Recovery Rate will increase by 1 percentage point over 3 years as reported through our student information system (AERIES).	In 2022-2023, the "Traditional" recovery rate of students was 92.8% In 2022-2023, online credit recovery was not offered.	In 2023-2024, the credit recovery rate of students was 96.4%	In 2024-2025, the credit recovery rate of students was 93.8%	Students who recover credits towards graduation either through traditional or online methods will increase by 1 percentage point by year 3.	The percentage of Secondary Student Credit Recovery Rate increased by 1.0%

31	Percent of Advanced Placement (AP) Examination Passing Rate with a "3" or better will increase by 2% percentage points annually until students reach the highest performance level as reported by the college board.	In 2022-2023, 76.8% of students on average pass the Advanced Placement Examination with a "3" or better	In 2023-2024, 81.2% of students on average pass the Advanced Placement Examination with a "3" or better	In 2024-2025, 85.3% of students on average pass the Advanced Placement Examination with a "3" or better	Students who pass the Advanced Placement Examination with a "3" or better will increase by 6 percentage points by year 3.	The percent of Advanced Placement (AP) Examination Passing Rate with a "3" or better increased by 8.5%
32	100% Compliance with the Williams Act Instructional Materials Requirement	100% Compliance with the Williams Act Instructional Materials Requirement in 2022-2023	100% Compliance with the Williams Act Instructional Materials Requirement in 2023-2024	100% Compliance with the Williams Act Instructional Materials Requirement in 2023-2024	100% Compliance with the Williams Act Instructional Materials Requirement	100% Compliance with the Williams Act Instructional Materials Requirement

33	Parent Participation in Decision-Making Groups: DELAC, LCAP Advisory Group, PTA Council Meetings (State Priority 3)	2023-2024 - 100% Compliance with DELAC, LCAP Advisory Group, and PTA Council participation increases	2024-2025 - 100% Compliance with DELAC, LCAP Advisory Group, and PTA Council participation	2025-26 - 100% Compliance with DELAC, LCAP Advisory Group, and PTA Council participation increases An increase in DELAC meetings by 3 to a total of 8 DELAC Meetings throughout the year. The LCAP Advisory group included the formation of the Superintendent's Budget Advisory Committee, a new committee this school year that met seven times in the spring of 2026 to discuss the LCAP budget. These were in addition to the three LCAP overview meetings. New meetings facilitated by the district brought an additional 20 educational partners to budgetary discussions.	100% Compliance with DELAC, LCAP Advisory Group, and PTA Council participation increases	100% Compliance with DELAC, LCAP Advisory Group, and PTA Council participation increases
34	Percent of students proficient in English Language Arts as Measured by District Assessment will increase by 3% over 3 years	In 2023-2024, 66% of Elementary students scored proficient on the I-Ready end-of-year reading assessment. In 2023-2024, 50% of Middle School students scored proficient on the I-Ready end-of-year reading assessment. In 2023-2024, 57% of High School students scored proficient on the spring District Writing Prompt.	In 2024-2025, 61% of Elementary students scored proficient on the I-Ready most recent reading assessment. In 2024-2025, 52.4% of Middle School students scored proficient on local reading assessments. In 2024-2025, 45.1% of High School students scored proficient on the District Writing Prompt.	In 2025-2026, 59.9% of Elementary students scored proficient on the most recent Star Reading assessment District Benchmark. In 2025-2026, 53.7% of Middle School students scored near standard, and 27.7% scored above standard on local reading assessments. In 2025-2026, 55.17% of High School students scored proficient on the District Writing Prompt.	All Students who are proficient in English Language Arts, as measured by District Assessments, will increase by 3 percentage points by year 3.	The percentage of Elementary students who scored proficient on the most recent reading assessment decreased by 6.1% The percentage of Middle School students who scored proficient on local reading assessments cannot be calculated in year 25-26, as a new assessment baseline has been established. The percentage of High School students who scored proficient on the District Writing Prompt decreased by 1.83%

35	Percent of students proficient in Mathematics as measured by District Assessment will increase by 3% over 3 years.	In 2023-2024, 58% of Elementary students scored proficient on the I-Ready end-of-year math assessment. In 2023-2024, 43% of Middle School students scored proficient on the I-Ready end-of-year math assessment. In 2023-2024, 41.1% of High School students scored proficient on the spring Math District Benchmark Assessments.	In 2024-2025, 62.8% of Elementary students scored proficient on the end-of-year math assessment. In 2024-2025, 59.81% of Middle School students scored proficient on the end-of-year math assessment. In 2024-2025, 44.02% of High School students scored proficient on the spring Math District Benchmark	In 2025-2026, 55.3% of Elementary students scored proficient on the end-of-year math assessment. In 2025-2026, 61.7% of Middle School students scored proficient on the end-of-year math assessment. In 2025-2026, 48.3% of High School students scored proficient on the spring Math District Benchmark	All Students who are proficient in Mathematics as Measured by District Assessment will increase by 3 percentage points by year 3.	The percentage of Elementary students who scored proficient on the EOY math assessment decreased by 2.7% The percentage of Middle School students who scored proficient on local EOY Math assessments increased by 18.7% The percentage of High School students who scored proficient on the EOY Math assessments increased by 7.2%
36	Percent of students college/career ready will increase annually by 2% percentage points annually until students reach the highest performance level	In 2022-2023, 49.6% of students were prepared as indicated in the GREEN Tier on the California Dashboard	In 2023-2024, 50.6% of students were prepared as indicated on the California Dashboard	In 2024-2025, 55.2% of students were prepared as indicated on the California Dashboard/Data Quest.	Students who are college/career prepared will increase by 6 percentage points by year 3.	The percentage of students college/career ready increased by 5.6%

37	Percent of college/career students completing the A-G requirements. The completion rate will increase by 2% per year until students reach the highest performance level.	In 2022-2023, 85.9% of college/career students met the A-G completion requirement (Dataquest).	In 2023-2024, 79.5% of college/career students met the A-G completion requirement (Dataquest).	In 2024-2025, 82.0% of college/career students met the A-G completion requirement (Dataquest).	College/career students completing the A-G requirement will increase by 6 percentage points by year 3.	The percent of college/career students completing the A-G requirements decreased by 3.9% (Dataquest).
38	Four Year Adjusted Cohort Graduation Rate will increase by 1% over 3 years	In 2022-2023, the four year adjusted cohort graduation rate was reported as 93.2% (Dataquest).	In 2023-2024, the four-year adjusted cohort graduation rate was reported as 96.3% (Dataquest).	In 2024-2025, the four-year adjusted cohort graduation rate was reported as 97.4% (Dataquest).	Four-year adjusted cohort graduation will increase by 1 percentage point by year 3.	The four-year Adjusted Cohort Graduation Rate increased by 4.2% (Dataquest).
39	Meet all Standards on Local Indicators as reported to the California Dashboard (State Priorities 1, 2, 3, 6, & 7)	In 2022-2023, the District reported that all Local Dashboard indicators were "Met" - Efforts to seek parent input in making decisions for the school district and each school site met - Promotion of parent participation in programs for unduplicated pupils and individuals with exceptional needs met	In 2023-2024, the District reported that all Local Dashboard indicators were "Met" - Efforts to seek parent input in making decisions for the school district and each school site met - Promotion of parent participation in programs for unduplicated pupils and individuals with exceptional needs met	In 2024-2025, the District reported that all Local Dashboard indicators were "Met" - Efforts to seek parent input in making decisions for the school district and each school site met - Promotion of parent participation in programs for unduplicated pupils and individuals with exceptional needs met	Maintain "Met" status on all Locally reported indicators on the California Dashboard.	All Standards on Local Indicators as reported to the California Dashboard were met.

40	Percentage of students on the Early Assessment Program scoring Prepared and Approaching Prepared in ELA will increase by 3 percentage points over 3 years until the students reach the highest level of performance.	In 2022-2023, prepared: 65.23% Approaching Prepared: 19.58% Not Prepared: 15.19% (Dataquest).	In 2023-2024, Prepared: 60.86% Approaching Prepared: 19.52% Not Prepared: 19.62% (Dataquest).	In 2024-2025, Prepared: 63.82%, Approaching Prepared: 17.23% Not Prepared: 18.95% (Dataquest).	The students on the Early Assessment Program scoring Prepared and Approaching Prepared in ELA will increase by 3 percentage points by year 3.	The percentage of students on the Early Assessment Program scoring Prepared decreased by 1.41% and, Approaching Prepared decreased by 2.35%, and not prepared increased by 3.76% (Dataquest).
41	Percentage of students on the Early Assessment Program scoring Prepared and Approaching Prepared in math will increase by 3 percentage points over 3 years until the students reach the highest level of performance.	In 2022-2023, Prepared: 34.76% Approaching Prepared: 22.58% Not Prepared: 42.67% (caaspp-elpac.ets.org).	In 2023-2024, Prepared in Math: 33.02% Approaching Prepared: 25.48% Not Prepared: 41.51% (caaspp-elpac.ets.org).	In 2024-2025, Prepared in Math: 38.07% Approaching Prepared: 20.32% Not Prepared: 41.60% (caaspp-elpac.ets.org).	Students on the Early Assessment Program scoring Prepared and Approaching Prepared in Math will increase by 3 percentage points by year 3.	The percentage of students on the Early Assessment Program scoring Prepared increased by 3.31%, Approaching Prepared in math decreased by 2.26%, and not prepared decreased by 1.07%(caaspp-elpac.ets.org).
42	Percent of Student Expulsions from the District will reduce/maintain a percent lower than the state	In 2022-2023, no students were expelled from the District	In 2023-2024, no students were expelled from the District	In 2024-2025, no students were expelled from the District	Student Expulsions from the District will reduce/maintain a percent lower than the state	The percent of Student Expulsions from the District remained at 0%

43	Access to a Broad Course of Student Local Indicator will be met (State Priority 7)	In 2022-2023, the metric was met as reported by the District. - Student access to standards-aligned instructional materials met. - Implementation of the academic content and performance standards adopted by the State Board met. - Programs and services enabling English learners to access the Common Core State Standards and ELD standards met.	In 2023-2024, the metric was met as reported by the District. - Student access to standards-aligned instructional materials met. - Implementation of the academic content and performance standards adopted by the State Board met. - Programs and services enabling English learners to access the Common Core State Standards and ELD standards met.	In 2024-2025, the metric was met as reported by the District. - Student access to standards-aligned instructional materials met. - Implementation of the academic content and performance standards adopted by the State Board met. - Programs and services enabling English learners to access the Common Core State Standards and ELD standards met.	Access to a Broad Course of Student Local Indicator will continue to be met all 3 years of the plan.	Access to a Broad Course of Student Local Indicator continues to be met.
44	Percent of All Students who score Exceeds or Meet Standards on the CAST will increase by 3 percentage points over 3 years.	In 2022-2023, 38.54% of All Students scored Exceeds or Meets Standards on the CAST.	In 2023-2024, 37.49% of All Students scored Exceeds or Meets Standards on the CAST.	In 2024-2025, 41.41% of All Students scored Exceeds or Meets Standards on the CAST.	All Students who score Exceeds or Meet Standards on the CAST will increase by 3 percentage points by year 3.	The percent of All Students who score Exceeds or Meet Standards on the CAST increased by 2.87%

45	Percentage of students who met both College and Career Indicators for A-G completion (College Ready) and completing a CTE Pathway (Career Ready) (CA Dashboard/Data Quest).	In 2022-2023, 11.6% of students met UC/CSU Requirements AND Completed at Least One CTE Pathway	In 2023-2024, 6.8% of students met UC/CSU Requirements AND Completed at Least One CTE Pathway.	In 2024-2025, 8.8% of students met UC/CSU requirements and completed at Least One CTE Pathway.	Increase the percentage of students meeting both the A-G and CTE requirements for the college and career indicator by 3%.	The percentage of students who met UC/CSU Requirements AND Completed at Least One CTE Pathway decreased by 2.8%.

Goal Analysis for 2025-2026

An analysis of how this goal was carried out in the previous year.

A description of overall implementation, including any substantive differences in planned actions and actual implementation of these actions, and any relevant challenges and successes experienced with implementation.

Overall Implementation & General Successes Overall, the implementation of Goal 1 was highly successful, with 30 of the 30 planned action items implemented. The vast majority of these actions were fully implemented as planned, with only minor adjustments made based on staffing vacancies, salary schedule placements, or increased program participation. Base-funded (non-contributing) actions (Actions 23-30), including GATE program identification, music and art resources, special education support, CTE pathways, and middle school world language courses, were fully implemented as intended without interruption.
A thorough review of state and local metrics indicates notable progress in several key areas. The District successfully met its metrics measuring progress on local indicators, Advanced Placement (AP) pass rates, and dropout rates. Furthermore, the graduation rate improved across almost all student groups (Actions 6, 8, 9, 13, 16, 18-21), with the exception of students experiencing homelessness. While overall CAASPP ELA and Math proficiency rates remain an area for growth due to the lingering impacts of pandemic disruptions on primary grades, specific targeted student groups demonstrated significant academic successes. Specifically, English Learners met their growth target in English Language Arts, and both Students with Disabilities and Hispanic student groups demonstrated growth in Mathematics.
Action-Specific Successes (Contributing Actions) The implementation of specific contributing actions effectively supported our unduplicated student groups (English Learners, Foster Youth, and Low-Income students):
Class Size & Direct Instruction: Elementary Class Size Reduction for Grades 4 and 5 (Action 1) was fully implemented with highly experienced staff, successfully enhancing individualized instruction at Disney and McKinley Elementary.
English Learner Supports: Actions targeting English Learners were robustly implemented. Elementary ELD Specialists (Action 2) and Instructional Assistants (Action 3) provided consistent, targeted language development. Secondary Designated ELD Teachers (Action 6) and Secondary ELD Assistants (Action 19) delivered essential academic language development, with staffing strategically shifted to match site-specific EL populations. Additionally, Secondary Sheltered ELD Sections for Social Studies and Science (Action 18) and Supplemental EL Program Supports (Action 13) were fully implemented to integrate language development with content learning.
Dual Immersion: Dual Immersion Teacher Cost Share (Action 4) and Dual Immersion Assistants (Action 5) were fully staffed, strengthening language proficiency and cultural inclusion at McKinley and Disney Elementary.
Professional Development & Curriculum: Induction PD for new teachers (Action 8), District-wide PD Days (Action 9), and Culturally Responsive Pedagogy PLCs (Action 20) were

fully implemented, promoting inclusive, equity-focused instructional strategies. Curriculum Specialists (Action 14) and Library Coordinators (Action 15) successfully supported curriculum alignment and enhanced literacy access.
Intervention & Wellness: Elementary RTI for Reading/Math (Action 10) and RTI Assessment Programs like iReady and School City (Action 21) effectively provided tiered interventions and data-informed instructional planning. Furthermore, Middle School Psychologists (Action 11) and Behavior Specialists (Action 12) provided critical mental health and behavioral support, promoting a positive school climate.
Family Engagement: Interpreters for Second Language Learner Parents (Action 7) successfully facilitated family engagement, utilizing AI in some instances to efficiently lower expenditures.
Targeted Student Support: Support for Twice Exceptional (GATE + Unduplicated) students (Action16) was fully implemented, addressing their unique academic and social-emotional needs.
Challenges and Substantive Differences. while implementation was largely successful, the District experienced relevant challenges, primarily driven by state-wide staffing shortages and recruitment difficulties. Identifying highly qualified staff for competitive positions—particularly instructional aides—resulted in temporary vacancies at several school sites.

Budgetary Variances due to Staffing: Staffing dynamics created discrepancies between budgeted amounts and estimated actuals. In some instances (Actions 2, 3, 5, 6, 10, 13, 14, 17, and 19), vacancies or the use of long-term substitutes resulted in lower-than-anticipated expenditures. Conversely, when vacancies were successfully filled with highly qualified candidates (Actions 1, 4, 8, 11, 12, and 14), it resulted in increased salary and benefit expenditures due to their advanced placement on the salary schedule.
Ongoing Areas for Growth: Increasing the District's A-G completion rate and improving the College and Career Indicator (CCI) remain priority challenges. BUSD is actively monitoring these metrics for accurate reporting and is developing additional A-G completion incentives, evaluating graduation requirement adjustments, and utilizing PLCs to increase student performance in A-G coursework. Additionally, general academic performance in CAASPP ELA and Math for the broader student population remains a challenge that will require sustained intervention efforts.
Action Specific Successes:
Elementary Class Size Reduction (Grades 4 and 5) Action 1
- Fully implemented with an increase in experienced staff.
- Targeted subgroups: Foster Youth, Low Income, English Learners.
- Analysis: Increased staffing at Disney and McKinley Elementary supported smaller class sizes, enhancing individualized instruction.

Elementary ELD Specialists Action 2
- Fully implemented with the shifting of staffing based on EL populations at school sites.
- Targeted subgroup: English Learners (TK–5).
- Analysis: ELD specialists provided targeted language development, maintaining consistent support across elementary grades.

Elementary ELD Instructional Assistants Action 3
- Fully implemented with temporary vacancies at specific school sites.
- Targeted subgroup: English Learners (TK–5).
- Analysis: Assistants supported ELD instruction, contributing to language acquisition and academic engagement.

Dual Immersion Teacher Cost Share Action 4
- Fully implemented with consistency in staffing.
- Targeted subgroups: Low Income, English Learners.
- Analysis: Bilingual instruction at McKinley and Disney Elementary strengthened language proficiency and cultural inclusion.

Dual Immersion Instructional Assistants Action 5
- Fully implemented based on existing program needs.
- Targeted subgroup: English Learners.
- Analysis: Provided classroom support in dual immersion settings, reinforcing bilingual learning.

Secondary Designated ELD Teachers Action 6
- Fully implemented with shifting in staffing based on EL populations in schools and grade levels.
- Targeted subgroup: English Learners (Grades 6–12).
- Analysis: Teachers delivered designated ELD instruction, supporting academic language development.

Interpreters for Second Language Learner Parents Action 7
- Fully implemented, and AI has been used in some cases to lower expenditures.
- Targeted subgroups: English Learners, Foster Youth, Low Income.
- Analysis: Interpreters facilitated family engagement and access to school services.

Induction Professional Development (TOSA) Action 8
- Fully implemented with a change in personnel mid-year.
- Targeted subgroups: Low Income, Foster Youth, English Learners.
- Analysis: Supported new teachers with mentorship and training, improving instructional quality.
- Funds identified have not been increased for multiple years and no longer fund the current staffing costs for a day and a half of Professional Development for all staff. The release of unspent Learning Recovery Block Grant Funds will be used to ensure we can sustain the time and fund all staff to participate in Professional Development focused on improving LCAP Goals and measuring outcomes to ensure full implementation of this action item.

Professional Development Days for All Teachers Action 9
- Fully implemented with consistency in planned Professional Development.
- Targeted subgroups: English Learners, Foster Youth, Low Income.
- Analysis: Focused on inclusive practices and academic strategies to support diverse learners.

Elementary RTI for Reading/Math Action 10
- Fully implemented with reduced expenditures due to fewer extra hourly assignments.
- Targeted subgroups: Low Income, Foster Youth, English Learners.
- Analysis: RTI programs provided tiered interventions to address academic gaps.

Middle School Psychologists (2.0 FTEs) Action 11
- Fully implemented with a change in personnel.
- Targeted subgroups: English Learners, Foster Youth, Low Income.
- Analysis: Psychologists supported mental health and academic success in middle grades.

Behavior Specialists Action 12
- Fully implemented with the addition of 7.0 FTEs
- Targeted subgroups: English Learners, Foster Youth, Low Income.
- Analysis: Specialists addressed behavioral needs, promoting a positive school climate.

English Learner Program – Supplemental Supports Action 13
- Fully implemented with budget more accurately reflected in personnel costs in Actions 3 & 19
- Targeted subgroup: English Learners.
- Analysis: Provided additional resources and services to enhance EL achievement.

Curriculum Specialists (Elementary) Action 14
- Fully implemented with new personnel at specific school sites.
- Targeted subgroups: Foster Youth, Low Income, English Learners.
- Analysis: Specialists supported curriculum alignment and instructional planning.

Library Coordinators (Elementary) Action 15
- Fully implemented with temporary vacancies at specific school sites.
- Targeted subgroups: English Learners, Foster Youth, Low Income.
- Analysis: Coordinators enhanced literacy access and library programming.

Support for Twice Exceptional Students (GATE + Unduplicated) Action 16
- Fully implemented with Professional Development with an increase of funding and staffing
- Targeted subgroups: English Learners, Low Income, Foster Youth.
- Analysis: Services addressed unique academic and social-emotional needs.

Elementary Assistant Principals (2.0 FTE) Action 17 (Replaced previous action Elementary ELD Instructional Supports from 24-25 Plan)
Fully implemented with Staff at Miller and Jefferson Elementary Schools
Targeted Subgroups: English Learners & Low Income
Analysis: Larger schools received better support with an assistant principal in place instead of Curriculum Specialist with limited responsibilities.

Secondary Sheltered ELD Sections (Social Studies & Science) Action 18
- Fully implemented with increased need, but budget restraints did not allow for increased staffing.
- Targeted subgroup: English Learners (Grades 6–8).
- Analysis: Sheltered instruction integrated language development with content learning.

Secondary ELD Instructional Assistants (ALL FTEs now reflected in 19 instead of action 13) Action 19
- Fully implemented with shifting of staffing based on EL Populations in school sites and grade levels.
- Targeted subgroup: English Learners (Grades 6–12).
- Analysis: Assistants supported ELD instruction and student engagement. Culturally Responsive

Pedagogy PD (K–12 PLCs) Action 20
- Fully implemented as planned with funding from A-G grant prioritized for expenditures
- Targeted subgroups: Low Income, Foster Youth, English Learners.
- Analysis: PD promoted inclusive teaching practices and equity-focused instruction. RTI Assessment

Programs (iReady & School City) Action 21
- Fully implemented as planned.
- Targeted subgroups: English Learners, Foster Youth, Low Income.
- Analysis: Assessment tools, informed instruction, and intervention planning.

Specific Successes (Non-Contributing Actions).
GATE Program Annual Identification Process, District GATE Coordinator, Music Instrument Repair and Replacement, Secondary Art Supplies and Materials, Provide support for students with Disabilities to achieve their IEP goals, Elementary Music Teachers Staffing, Provide CTE Pathway offerings to secondary students, and World Language Courses at Middle Schools. Actions 23-30.
- Fully implemented as planned.
- Analysis: General Budget Base Funding was used to implement all of the above actions as intended. Staffing, account strings, purchases, and distribution of resources were implemented with consistency from previous years and as planned.

An explanation of material differences between Budgeted Expenditures and Estimated Actual Expenditures and/or Planned Percentages of Improved Services and Estimated Actual Percentages of Improved Services.

Summary: Overall, the district experienced a net overspending of approximately $31,552 for Goal 1 contributing initiatives. This variance was largely driven by a mix of staffing-related challenges, such as higher salary placements in specific areas, offset by unfilled positions and recruitment difficulties in other areas. The most significant overspending occurred in Elementary RTI for Reading/Math (Action 1.10), which saw expenditures come in nearly $123,276 over budget due to an increase in the need for extra hourly assignments and loss of LREBG funds. Other areas with lower-than-expected expenditures included Elementary ELD Instructional Assistants, Elementary Assistant Principals, Culturally Responsive Pedagogy PD, and Outdoor Science School Support, the latter of which saw no expenditures during this cycle. While the services were maintained, they were often delivered with new staff at full capacity but lower salary rate or funding with site funds which didn't require district supplemental support..
Conversely, some areas saw higher-than-anticipated costs. Notably, expenditures increased for Curriculum Specialists and Elementary Class Size Reduction. These increases were attributed to either higher salary placements for highly qualified hires, expanded staffing to meet growing student needs, or mid-year personnel shifts that resulted in staffing overlaps.
Despite these fluctuations, the district maintained its commitment to the core objectives of Goal 1: ensuring high-quality instruction aligned with state standards, supporting English learners and other unduplicated student groups, and enhancing student achievement through targeted interventions. The adjustments made reflect a responsive approach to evolving needs, balancing fiscal responsibility with the goal of sustaining and improving educational outcomes for unduplicated students.
Specific Actions: Action 1.1 – Elementary Class Size Reduction (Grades 4 and 5)
Variance: Increase in expenditures (Planned: $219,098 | Actual: $279,232).
Targeted subgroups: Low Income, English Learners.
Analysis: Increased staffing at Disney and McKinley Elementary supported smaller class sizes, enhancing individualized instruction with an increase in highly qualified, experienced staff, which resulted in increased salary expenditures.
Action 1.10 – Elementary RTI for Reading/Math
Variance: Increase in expenditures (Planned: $473,376 | Actual: $596,652).
Targeted subgroups: Low Income, English Learners.
Analysis: While tiered interventions supported academic gaps, actual expenditures were significantly higher due to additional extra hourly assignments that were previously funded through the LREBG funds that were no longer available in 25-26.
Action 1.16 - Targeted support for Twice Exceptional students who qualify as GATE and are included in the unduplicated count
Variance: Decrease in expenditures (Planned $70,000 | Actual $41,197).
Targeted: GATE and Low Income
Analysis: Position was not filled until the spring semester. No applicants when flown multiple times in the fall semester.
Action 1.17 – Elementary Assistant Principals (Miller & Jefferson 2.0)
Variance: Decrease in expenditures (Planned: $321,239 | Actual: $268,085).
Targeted subgroups: Low Income, English Learners.
Analysis: Staff salaries were lower than anticipated.
Action 1.20 – Culturally Responsive Pedagogy PD (K–12 PLCs)
Variance: Decrease in expenditures (Planned: $125,000 | Actual: $73,044).
Targeted subgroups: Low Income, English Learners.
Analysis: The district delivered the planned professional development, but utilized existing structures and alternative scheduling, which reduced the need for external extra-hourly compensation. Additionally, A-G Grant funds were utilized to pay for the primary cost for delivering Professional Development.
Action 1.22 – Outdoor Science School Support Funding
Variance: Decrease in expenditures (Planned: $20,000 | Actual: $0).
Targeted subgroups: Low Income, English Learners.
Analysis: While established as a new support measure, schools were able to fully fund their trips using site funds without the need for additional district funding, resulting in no expenditures.

A description of the effectiveness or ineffectiveness of the specific actions to date in making progress toward the goal.

Summary: The analysis of Goal 1 for the 2025-2026 school year plan reveals a mixed but improving picture of effectiveness regarding all actions taken to date. Goal 1, which focuses on career and college readiness through high-quality instruction, has seen varied results across different metrics and student groups, though recent data indicates strong post-pandemic recovery in several areas. Each action has been implemented and has been determined to be effective to some degree.

The CAASPP scores, a key metric for assessing academic performance, show continuous improvements for English Learners, increasing from a baseline of 13.41% to 15.99% in meeting or exceeding standards in English Language Arts (ELA). Other groups, such as socioeconomically disadvantaged (SED) students and homeless students, experienced an initial decline but have shown recent rebounds. For instance, SED students' scores rebounded to 43.82% (up from 43.15% the previous year), and homeless students' scores recovered to 45.16% (up from 25.00%). Overall, the CAASPP scores for all students increased from the prior year to 58.02% in ELA and 46.56% in Mathematics (which exceeds the original math baseline), indicating that instructional interventions (Actions 8–12) are beginning to yield effective results - specifically in grades 6-8 which experienced significant gains on average of 4-6% increase.

Graduation rates present a highly positive and consistent trend, with overall rates increasing from 93.2% to an impressive 97.4%. English Learners saw a substantial and sustained increase, rising from 80.6% to 95.6%, and socioeconomically disadvantaged students' rates steadily rose from 91.0% to 95.5% (Actions 6, 8, 9, 13, 16, 18, 19, 20, and 21). Furthermore, homeless students experienced a rebound in graduation rates, improving from 85.2% to 95.2%, though this remains an area requiring additional targeted support.

Reclassification rates for English Learners, another important metric, initially decreased from a baseline of 20.7% to 12.67%, suggesting that early strategies were struggling to help students achieve proficiency. However, recent data shows a recovery to 13.7% (Actions 3, 5, 13, and 19). The earlier drop may have been partially influenced by a large, temporary "bubble" of students being reclassified immediately following the return from distance learning.

When comparing Burbank Unified School District's performance to the state of California and similar districts it has been consistent. For example, the latest California School Dashboard indicates that BUSD's performance in English Language Arts is categorized as "Green" (High). Furthermore, our targeted efforts in Mathematics have paid off, with the District improving from a "Medium/Yellow" status to a "Green" status on the most recent Dashboard.

The non-contributing actions listed under Goal 1 (Actions 1.22 through 1.29) are considered highly effective based on the metrics and local data provided in the plan. These actions primarily support the broader instructional and enrichment framework of BUSD and are designed to enhance student engagement, access to a well-rounded curriculum, and overall academic achievement. For instance, actions such as the GATE Program Identification Process (Action 1.22), the District GATE Coordinator (Action 1.23), and support for music and arts education (Actions 1.24, 1.25, and 1.27) contribute to maintaining student interest and connectedness, which are monitored through local engagement surveys. Additionally, the District's investment in Career Technical Education (CTE) pathways (Action 1.28) and world language courses at the middle school level (Action 1.29) directly align with college and career readiness. These offerings support the District's performance on the College and Career Indicator (CCI)—which rebounded to 55.2%—and A-G completion rates which increased to 49.2%. While these actions are not directly tied to supplemental funding, they serve all students and contribute significantly to overall academic equity.

Specific Actions:

Action 1.1 – Elementary Class Size Reduction (Grades 4 and 5) Effective (Metrics 1.1–1.16; 1.20-1.26: CAASPP ELA & Math; Graduation). Improved individualized instruction and teacher collaboration. CAASPP ELA, Math, and progress towards proficiency increased for English learners (EL CAASPP ELA scores increased to 15.99%), and graduation rates consistently increased for ELs (from a baseline of 80.6% to 94.5%) and socioeconomically disadvantaged students (from a baseline of 91.0% to 96.8%), demonstrating effective increased services for these target groups.

Action 1.2 – Elementary ELD Specialists Effective (Metrics 1.2, 1.10, 1.17, 1.18: EL CAASPP & Reclassification). ELs showed consistent growth in ELA CAASPP (increasing from a 13.41% baseline up to 15.99%) and ELPAC progress; reclassification initially declined but showed recent recovery (rebounding to 13.7%), stabilizing after an initial post-pandemic bubble. This targeted staffing directly improved services and outcomes for the EL population.

Action 1.3 – Elementary ELD Instructional Assistants Effective (Metrics 1.2, 1.10, 1.17, 1.18). Supported ELs with small group instruction. ELPAC progress improved, and reclassification rates showed signs of recovery following previous data bubbles (improving to 13.7%), validating the effectiveness of increased direct instructional support for EL students.

Action 1.4 – Dual Immersion Teacher Cost Share Effective (Metrics 1.1–1.16; 1.20-1.26: CAASPP ELA & Math; Graduation). Provided robust bilingual engagement; CAASPP ELA, Math, and progress towards proficiency increased for English learners (up to 15.99% in ELA), while graduation rates increased for ELs (94.5%) and socioeconomically disadvantaged students (96.8%), demonstrating strong efficacy in improving outcomes for unduplicated pupils.

Action 1.5 – Dual Immersion Instructional Assistants Effective (Metrics 1.1–1.16; 1.20-1.26: CAASPP ELA & Math; Graduation). Reinforced bilingual learning; EL performance

demonstrated steady upward trends (with EL CAASPP ELA reaching 15.99%), highlighting the value of increased primary language support.
Action 1.6 – Secondary Designated ELD Teachers Effective (Metrics 1.2, 1.10, 1.17, 1.18). ELs improved in both Math and ELA CAASPP (growing to 15.99% in ELA); reclassification rates showed signs of rebounding to 13.7%. This action remains a critical increased service for accelerating secondary language acquisition.
Action 1.7 – Interpreters for Second Language Learners Effective (Metrics 1.2, 1.10, 1.17, 1.18, 1.33). Improved family engagement for students whose home language is not English, supporting the conditions that led to EL CAASPP growth (up to 15.99%) and increased progress toward proficiency. Schools primarily supported include Burbank High (14.4% EL Population), George Washington ES (20.8% EL Population), Joaquin Miller ES (35.1% EL Population), John Muir MS (17.7% EL Population), and Ralph Emerson (25.2% EL Population).
Action 1.8 – Induction Professional Development (TOSA) Effective (Metrics 1.1–1.16; 1.20-1.26: CAASPP ELA & Math; Graduation). Supported new teachers, contributing to recent rebounds in CAASPP subgroups; graduation rates for ELs (increased to 94.5%) and SEDs (increased to 96.8%) increased notably, showing the indirect but powerful impact of well-trained staff on high-needs populations.
Action 1.9 – Professional Development Days for All Teachers Effective (Metrics 1.1–1.16; 1.20-1.26: CAASPP ELA & Math; Graduation). Supported inclusive instruction; overall graduation rates reached 97.4% (up from a 93.2% baseline), and CAASPP metrics for subgroups showed recovery. Funds identified have not been increased for multiple years and no longer fund the current staffing costs for a day and a half of Professional Development for all staff. The release of unspent Learning Recovery Block Grant Funds will be used to ensure we can sustain the time and fund all staff to participate in Professional Development focused on improving LCAP Goals and measuring outcomes to ensure the effectiveness of this action item.
Action 1.10 – Elementary RTI for Reading/Math Effective (Metrics 1.1–1.16; 1.20-1.26: CAASPP ELA & Math; Graduation). Tiered interventions supported academic gaps; dropout and absenteeism improved, and CAASPP results in targeted subgroups rebounded (e.g., SED Math improved to 33.74%), proving highly effective at improving services for struggling learners.
Action 1.11 – Middle School Psychologists (2.0 FTEs) Effective (Metrics 1.20–1.28: Graduation & Dropout Rates). Supported mental health; overall attendance and graduation metrics demonstrated strong improvement (overall graduation rising to 97.4%), successfully removing social-emotional barriers to academic achievement for unduplicated students.
Action 1.12 – Behavior Specialists Effective (Metric 1.42: Expulsions). Suspension and expulsion rates declined; behavioral support significantly expanded across sites, effectively improving the learning environment and safety for all unduplicated subgroups.
Action 1.13 – English Learner Program – Supplemental Supports Effective (Metrics 1.2, 1.10, 1.17, 1.18). ELs steadily improved in CAASPP (reaching 15.99% in ELA) and ELPAC; reclassification stabilized and recovered slightly to 13.7% after adjusting for the previous year's data bubble.
Action 1.14 – Curriculum Specialists (Elementary) Effective (Metrics 1.1–1.16; 1.20-1.26: CAASPP ELA & Math; Graduation). Supported standards-aligned instruction; implementation fidelity is high. Graduation rates increased for ELs (94.5%) and socioeconomically disadvantaged students (96.8%). Subgroups improving in ELA include low-income students at Walt Disney ES and William McKinley ES (Yellow on Dashboard with growth), and English Learners at Providencia & William McKinley (Yellow with growth). Subgroups improving in Math include low-income students at Bret Harte (Green with growth), Providencia, and William McKinley (Yellow with growth); and English Learners at Ralph Emerson and William McKinley (Yellow with growth).
Action 1.15 – Library Coordinators (Elementary) Partially Effective (Metrics 1.1–1.8: CAASPP ELA). Literacy access improved, and support for unduplicated students remained consistent. EL CAASPP scores on ELA improved to 15.99%. Similar to Action 1.14, SED student ELA scores are rebounding but require further momentum. Subgroups improving in ELA include low-income students at Walt Disney ES and William McKinley ES (Yellow on Dashboard with growth), and English Learners at Providencia & William McKinley (Yellow with growth).
Action 1.16 – Support for Twice Exceptional Students (GATE + Unduplicated) Ineffective (Metrics 1.8 & 1.16: CAASPP ELA & Math). CAASPP scores initially declined before showing minimal recent improvement; therefore, funding will be increased to provide more robust, targeted professional development to better support this unique intersection of student needs.
Action 1.17 – Elementary Assistant Principals Effective (Metrics 1.1–1.16; 1.20-1.26: CAASPP ELA & Math; Graduation). Supported standards-aligned instruction; implementation fidelity is high. Graduation rates increased for ELs (to 94.5%) and socioeconomically disadvantaged students (to 96.8%).
Action 1.18 – Secondary Sheltered ELD Sections (Social Studies & Science) Effective (Metrics 1.2, 1.10, 1.17, 1.18). Supported ELs in content areas; contributed to modest CAASPP growth (EL ELA at 15.99%) and rebounding progress towards reclassification (13.7%), directly improving access to the core curriculum.

Action 1.19 – Secondary ELD Instructional Assistants (5 FTEs) Effective (Metrics 1.2, 1.10, 1.17, 1.18). ELPAC progress improved; reclassification recovered to 14.8% (with district-wide average at 13.7%), with modest but consistent CAASPP gains in ELA scores.
Action 1.20 – Culturally Responsive Pedagogy PD (K–12 PLCs) Effective (Metrics 1.1–1.16, 1.20–1.29, 1.34–1.39). Supported equity-focused instruction; overall graduation and engagement metrics improved across unduplicated groups (SED graduation rising to 96.8%).
Action 1.21 – RTI Assessment Programs (iReady & School City) Effective (Metrics 1.1–1.16, 1.20–1.29, 1.34–1.39). Local assessment proficiency improved, providing critical data to inform classroom instruction and target specific interventions for EL, SED, and Foster Youth.
Non-Contributing Actions (Evaluated Using All-Student Metrics)
Action 1.22 – Outdoor Science School Support Funding Effective (Metrics 1.44). Supported equity-focused instruction, Science Instruction for students in grade 5; CAST scores increased by 2.87%
Action 1.23 – GATE Program Identification Effective (Metrics 1.39 & 1.43: General engagement and access metrics). Maintained identification process; successfully supported enrichment across the district.
Action 1.24 – District GATE Coordinator Effective (Metrics 1.39 & 1.43). Ensured continuity and support for program oversight.
Action 1.25 – Music Instrument Repair/Replacement Effective (Metrics 1.32, 1.39 & 1.43). Supported continuous arts access and student engagement.
Action 1.26 – Secondary Art Supplies Effective (Metrics 1.32, 1.39 & 1.43). Supported visual arts instruction and broad course of study access.
Action 1.27 – Support for Students with Disabilities (IEP Goals) Effective (Metrics 1.20, 1.25, 1.39 & 1.43). Maintained IEP services; graduation rates for SWD remained stable, and CAASPP math scores showed growth.
Action 1.28 – Elementary Music Teachers Effective (Metrics 1.39 & 1.43). Provided music instruction to ensure a broad course of study and a well-rounded curriculum for students in all TK-5 grade levels.
Action 1.29 – CTE Pathway Offerings Effective (Metrics 1.36, 1.39 & 1.43). Supported college/career readiness; the College/Career Indicator (CCI) rebounded successfully from a 50.6% baseline to 55.2%.
Action 1.30 – World Language Courses at Middle Schools Effective (Metrics 1.29, 1.31, 1.39 & 1.43). Supported foundational language instruction and A-G completion readiness, contributing to overall high graduation rates (97.4%).

A description of any changes made to the planned goal, metrics, target outcomes, or actions for the coming year that resulted from reflections on prior practice.

Reflections on the implementation of Goal 1 during the 2025–2026 school year have led to a collective decision by the Burbank Unified School District (BUSD) and our educational partners to "stay the course" for the upcoming 2026–2027 LCAP. Because the District executed significant, strategic adjustments to supplemental funding and actions in the previous year to more effectively support student academic performance and well-being, the focus for the coming year is to allow these newly established programs to mature and solidify. Therefore, no substantive changes are being made to the planned goal, metrics, target outcomes, or actions for the 2026–2027 cycle.
Reflecting on the 2025–2026 Changes: The consensus to maintain our current alignment is rooted in the success of the targeted shifts implemented during the 2025–2026 school year. In response to mixed post-pandemic academic results, the District reallocated funds to more impactful areas, and those decisions are now yielding positive early indicators. The following key changes, initiated in 2025-2026, will be maintained without alteration for the 2026-2027 LCAP:
Behavior Specialists (Action 1.12): The District maintains the significant staffing increase from 2.0 FTEs to 9.0 FTEs. This expansion has successfully enhanced student behavioral support, which indirectly but powerfully supports academic performance and engagement.
Elementary Assistant Principals: BUSD will continue to fund the Elementary Assistant Principals at Miller ES and Jefferson ES. This strategic reallocation—replacing former Curriculum Specialists at these specific sites—successfully provided the necessary administrative capacity to enhance school management and student support at our two largest elementary schools.
Response to Intervention (Action 1.10): The funding for elementary RTI will be increased at the right-sized amount. This reflects a successful realignment of resources to match actual historical expenditures for extra hourly services, allowing funds to be utilized elsewhere without negatively impacting tiered interventions.
Twice Exceptional GATE Students (Action 1.16): The District will maintain the increased funding levels established last year to provide robust, targeted professional development that better addresses the unique needs of twice-exceptional students.
Outdoor Science School Support: The District continues to allocate $20,000 to enhance experiential learning opportunities and boost student engagement in the sciences.
Interpreter Efficiency (Action 1.7): The District will continue to leverage efficient practices, including the use of AI for translating documents and written correspondence, to maximize resources while maintaining strong communication with second-language learner parents.
Long-Term English Learners (LTELs): Because BUSD has over 100 Long-Term English Learners, the District will continue to directly support these students through our existing, highly effective English Learner Development actions embedded in Goal 1. Having seen positive results from our current services—such as improved ELPAC progress and rebounding reclassification rates—we will continue to leverage these structures to accelerate outcomes for our LTEL population.
Professional Development for all Staff (Action 1.9) The recent re-allocation of unspent LREBG funds will be included in the 26-27 and 27-28 LCAP plans to increase and improve professional development offerings and opportunities as part of the existing goal, one action item for professional development (Action 9). No expenditures of LREBG funds were expended in 25-26. Additional funding provided by LREBG will ensure all staff can participate in full.
Maintaining Metrics and Target Outcomes: The metrics and target outcomes used to evaluate Goal 1 will generally remain unchanged. BUSD will continue tracking the impact of behavior specialists on incident rates, measuring the academic growth supported by our APs and instructional staff, and rigorously monitoring CAASPP scores, EL reclassification rates, and A-G completion rates.
Additionally, new/additional instructional goals were added to key metrics to monitor reading proficiency in Grade 3 (metrics 1.1 and 1.3), grade-level proficiency in mathematics in middle school grades (6-8; metrics 1.10 and 1.11) LTEL data points were added to metrics that measure ELD progress and reclassification (metrics 1.2, 1.10, and 1.17) for school years for which this data was available. Metric 1.33 identified increases in parent decision-making and participation. Lastly, data was updated for the baseline year in metric 1.41 regarding the Early Assessment Program.

In conclusion, while the District faced broader challenges related to the pandemic's lingering effects, the data indicate that our targeted interventions are working. The 2026–2027 school year represents a commitment to stability and implementation fidelity. By continuing the actions refined during the 2025–2026 cycle and contributing additional LREBG funds to existing actions (1.9), BUSD aims to build upon our recent successes, driving continuous improvement in overall academic performance and student well-being.

A report of the Total Estimated Actual Expenditures for last year's actions may be found in the Annual Update Table. A report of the Estimated Actual Percentages of Improved Services for last year's actions may be found in the Contributing Actions Annual Update Table.

Actions

Action #	Title	Description	Total Funds	Contributing
1	Elementary Class Size Reduction Grades 4 and 5	Research shows that smaller class size coupled with effective teaching practices results in greater students achievement. The makeup of classrooms is approximately 40% of students who are English learners, low-income students, and students experiencing homelessness. Teachers and instructional assistants provide students with small group and 1:1 instruction that will towards student academic success. The action being developed is based on the needs of English learners and socioeconomically disadvantaged students (low-income students). The following data set provides the reader with additional data for comparative purposes. Disney ELA SBAC data indicates the following need to raise the percentage of students who meet or exceed the standard from the following 2022-23 baseline: All (68.04%); ELs (16.67%); SEDs (55.00%); Homeless (**%) Disney Math SBAC data indicates the following need to raise the percentage of students who meet or exceed the standard from the following 2022-23 baseline: All (50.00%); ELs (7.70%); SEDs (36.91%); Homeless (**%) McKinley ELA SBAC data indicates the following need to raise the percentage of students who meet or exceed the standard from the following 202-23 baseline: All (45.46%); ELs (0.0%); SEDs (31.33%); Homeless (**%) McKinley Math SBAC data indicates the following need to raise the percentage of students who meet or exceed the standard from the following 2022-23 baseline: All (37.05%); ELs (11.11%); SEDs (19.27%); Homeless (**%) (**% is too small at school level for percentage) 4th and 5th Grade Class Size Reduction for Targeted Subgroups - Disney Elementary and McKinley Elementary (Title I Schools) Smaller class sizes will allow the teacher and instructional assistants to work with students in small groups and in a 1:1 setting, resulting in increased student achievement.	$284,816.64	Yes
2	Elementary ELD Specialists	The action being developed is based on the needs of English learners. The following data set provides the reader with additional data for comparative purposes. ELA SBAC data indicates the following need to raise the percentage of students who meet or exceed the standard from the following 2022-23 baseline: ELs (13.41%). Math SBAC data indicates the following need to raise the percentage of students who meet or exceed the standard from the following 2022-23 baseline: ELs (15.14%). 22-23 ELPAC making progress rate is 57.7%. 2022-23 reclassification rate is 20.7% English Language Development Specialists - Maintain 4 ELD specialists to support students and staff at elementary schools with English Learners	$616,583.88	Yes

		- Organize and conduct professional development in Designated ELD - Monitor progress of English Learners and recently reclassified students - Support Project G.L.A.D. and Step up to Writing training and program implementations - Assist in the analysis of data and review with staff - Provide demonstration lessons - Participate in SST's, IEP's, and the development of ILP's for English learners - Provide direct intervention services to English Learners The work of ELD specialists provide support to teachers, instructional assistants and students will result in increases (or maintaining when at a high level like reclassification rate) in student achievement and teacher/instructional assistant effectiveness.		
3	Elementary ELD Instructional Assistants	The action being developed is based on the needs of English learners. The following data set provides the reader with additional data for comparative purposes. ELA SBAC data indicates the following need to raise the percentage of students who meet or exceed the standard from the following 2022-23 baseline: ELs (13.41%). Math SBAC data indicates the following need to raise the percentage of students who meet or exceed the standard from the following 2022-23 baseline: ELs (15.14%). 22-23 ELPAC making progress rate is 57.7%. 2022-23 reclassification rate is 20.7% English Language Development Instructional Assistants - Provide additional hourly support in E/LA and ELD at the elementary level - Work with small groups of students to allow for differentiation and Tier II intervention - Assist teachers in the implementation of the ELD program - Assist teachers in the implementation of the RtI program The work of ELD instructional assistants provide support to teachers and students will result in increases (or maintaining when at a high level like reclassification rate) in student achievement and teacher/instructional assistant effectiveness on ELA and math SBAC. Addressing Differentiated Assistance for Long-Term English Learners (LTELs) As part of the District's strategic response to Year 2 Differentiated Assistance for our Long-Term English Learner (LTEL) student group, we have explicitly refined Goal 1, Action 3 (Elementary ELD Instructional Assistants) to clarify exactly who is doing what for whom. Who: Elementary ELD Instructional Assistants. Is Doing What: Providing highly targeted academic interventions, utilizing newly adopted supplemental ELD curriculum, and applying specific ELD instructional strategies. To ensure maximum effectiveness, these instructional aides will participate in dedicated professional development time where they will be explicitly trained on supportive mechanisms, the new supplemental curriculum, and advanced ELD instructional strategies. For Whom: Long-Term English Learners (LTELs) and elementary students at risk of becoming LTELs, within both designated ELD classrooms and general education classrooms containing	$1,034,809.38	Yes

		clusters of English Learners. Expected Outcomes and Dashboard Alignment This action will be specifically utilized to support LTELs in accelerating their academic performance on various state and local assessments, increasing their opportunities to progress toward reclassification. By utilizing highly trained instructional aides to provide accessible, sequentially supportive academic interventions, the district aims to reduce student frustration and disengagement. Therefore, this direct academic support acts as a critical lever to address the specific Differentiated Assistance dashboard indicators: it will improve overall academic performance in ELA and Math (Priority #4), while simultaneously increasing school connectedness to help reduce chronic absenteeism and suspension rates (Priority #6) for our LTEL population.		
4	Dual Immersion Teacher Cost Share	Class Size Reduction for Dual Immersion The action being developed is based on the needs of English learners and socioeconomically disadvantaged students (low-income students). The following data set provides the reader with additional data for comparative purposes. Disney ELA SBAC data indicates the following need to raise the percentage of students who meet or exceed the standard from the following 2022-23 baseline: All (68.04%); ELs (16.67%); SEDs (55.00%); Homeless (**%) Disney Math SBAC data indicates the following need to raise the percentage of students who meet or exceed the standard from the following 2022-23 baseline: All (50.00%); ELs (7.70%); SEDs (36.91%); Homeless (**%) McKinley ELA SBAC data indicates the following need to raise the percentage of students who meet or exceed the standard from the following 202-23 baseline: All (45.46%); ELs (0.0%); SEDs (31.33%); Homeless (**%) McKinley Math SBAC data indicates the following need to raise the percentage of students who meet or exceed the standard from the following 2022-23 baseline: All (37.05%); ELs (11.11%); SEDs (19.27%); Homeless (**%) (**% is too small at the school level for a percentage) 4th and 5th Grade Class Size Reduction for Targeted Subgroups - Disney Elementary and McKinley Elementary (Title I Schools) Research shows that a smaller class size, coupled with effective teaching practices, results in greater student achievement. The makeup of classrooms is primarily of unduplicated students with a concentration of students who are English learners and low-income. Teachers and instructional assistants provide students with small-group and 1:1 instruction that will contribute to student academic success. - This action will fund the partial cost to run the dual immersion classes, as it provides the most effective environment for English Language Learners to thrive academically - This action will reduce class size so that there are 5 to 7 fewer students per class to provide additional support to ELD & Low-income students.	$672,251.40	Yes
5	Dual Immersion	Dual Immersion (Spanish/English) Program	$149,109.72	Yes

	Instructional Assistants	The action being developed is based on the needs of English learners and socioeconomically disadvantaged students (low-income students). The following data set provides the reader with additional data for comparative purposes. Disney ELA SBAC data indicates the following need to raise the percentage of students who meet or exceed the standard from the following 2022-23 baseline: All (68.04%); ELs (16.67%); SEDs (55.00%); Homeless (**%) Disney Math SBAC data indicates the following need to raise the percentage of students who meet or exceed the standard from the following 2022-23 baseline: All (50.00%); ELs (7.70%); SEDs (36.91%); Homeless (**%) McKinley ELA SBAC data indicates the following need to raise the percentage of students who meet or exceed the standard from the following 202-23 baseline: All (45.46%); ELs (0.0%); SEDs (31.33%); Homeless (**%) McKinley Math SBAC data indicates the following need to raise the percentage of students who meet or exceed the standard from the following 2022-23 baseline: All (37.05%); ELs (11.11%); SEDs (19.27%); Homeless (**%) (**% is too small at school level for percentage) 4th and 5th Grade Class Size Reduction for Targeted Subgroups - Disney Elementary and McKinley Elementary (Title I Schools) - Instructional assistants are not provided in general education classrooms and only for one hour per day in transitional kindergarten and kindergarten classrooms - Provide Instructional Assistants (IAs) - Primary Language Support for three hours daily - Provide Primary Language Support at Disney Elementary and McKinley Elementary - Work with small groups of students to allow for differentiation and Tier II Intervention (as needed) - Serve as an additional language model of the target language - Assist teachers in the implementation of the dual immersion program		
6	Secondary Designated ELD Teachers	The action being developed is based on the needs of English learners to provide supplemental English language development instruction in addition to the core instruction provided at the site. The following data set provides the reader with additional data for comparative purposes. ELA SBAC data indicates the following need to raise the percentage of students who meet or exceed the standard from the following 2022-23 baseline: ELs (13.41%). Math SBAC data indicates the following need to raise the percentage of students who meet or exceed the standard from the following 2022-23 baseline: ELs (15.14%). 22-23 ELPAC making progress rate is 57.7%. 2022-23 reclassification rate is 20.7% Designated ELD (additional courses) - Provide a separate, additional classes for students who are in Transition English to teach the Standards for ELD (designated ELD)	$518,107.98	Yes

		- Support to secondary students who are English learners - Certificated salaries and related statutory benefits		
7	Interpreters for Second Language Learners	Interpreters (written and spoken) for Second Language Students, Parents, and Family Members - Continue to recruit and hire more classified staff who can provide interpretation services at all sites that have an English Learner Advisory Committee (ELAC), as well as to any District families who require translation - Translate documents for parents of English Language Learners	$70,000.00	Yes
8	Induction Professional Development Teacher on Special Assignment	New hires and teaching staff need support for entering into the workforce as well as a mechanism to finish their credentialing to be full-time, highly qualified, permanent teachers. Oftentimes times vacancies and new hires are positions that work with our most vulnerable populations, including English Learners and students experiencing homelessness. The teacher on Special Assignment will provide professional development services to induction teachers, focusing on the teaching and learning needs of unduplicated students. Attention will be given to the mastery of standards, engagement practices, monitoring, intervention services, assessments, and parent communication. The goal is twofold: to raise the level of instructional services provided by the teacher, with the additional benefit that students receive from better instructional practices that are consistently administered.	$30,600.00	Yes
9	Professional Development Day Costs for All Teachers (1 1/2 days)	LCFF Supplemental ($1,000,000) + LREBG Action ($750,000) The action being developed is based on the needs of English learners and socioeconomically disadvantaged students (low-income students). The following data set provides the reader with additional data for comparative purposes. ELA SBAC data indicates the following need to raise the percentage of students who meet or exceed the standard from the following 2022-23 baseline: All (58.43%); ELs (13.41%); SEDs (47.15%); Homeless (42.86%) Math SBAC data indicates the following need to raise the percentage of students who meet or exceed the standard from the following 2022-23 baseline: All (44.40%); ELs (15.14%); SEDs (32.74%); Homeless (28.58%) 22-23 ELPAC making progress rate is 57.7%. 2022-23 reclassification rate is 20.7% The focus of professional development is on the delivery of instruction and researched-based strategies to differentiate instruction for unduplicated student groups. English learners and low-income students will benefit from the focus on their instructional needs and the subsequent delivery of lessons by teachers. Additionally, learning recovery efforts to continue to be a focus for professional development opportunities as we remain focused on addressing gaps in learning through RTI, differentiated instruction, targeted scaffolding, and spiral review. The training will focus on dimensions of diversity, equity, and inclusion as they impact the teaching and learning of students who are low-income, experiencing homelessness, and English learners. Specific curricular supplemental resources, instructional strategies, monitoring systems, interventions, and outcomes will be components of the training. The goal of the training is to raise	$1,750,000.00	Yes

teaching and learning so that unduplicated students benefit from the work of the instructional staff in getting students more successful in their academic career while also attending to social-emotional learning.

Empowering Certificated Teachers and Instructional Aides Through Professional Development (Goal 1, Action 9)
To ensure that our English Learners and Long-Term English Learners (LTELs) receive the highest quality of cohesive support on their path to reclassification, the district is strategically utilizing Goal 1, Action 9 (Professional Development Days) to comprehensively train both our Certificated Teachers and our Elementary and Secondary ELD Instructional Assistants.

While instructional aides are funded through specific actions (Actions 1.3 and 1.19), Action 9 provides the dedicated, structured time necessary to equip all classroom educators with research-based ELD strategies and collaborative tools. This professional development will train staff to effectively support students through the following key focus areas:

1. Mastering the New Supplemental Curriculum
Both certificated classroom teachers and instructional aides will be trained on how to effectively utilize the newly purchased supplemental ELD curriculum. Certificated teachers will be trained on the pedagogical delivery and pacing of this vertically articulated curriculum, while instructional aides will learn how to seamlessly partner with the teacher to reinforce foundational language acquisition through targeted guided practice and small-group support.

2. Optimizing the Teacher-Aide Partnership
A critical component of this professional development is explicitly training certificated classroom teachers on how to best utilize and direct their instructional aides. Teachers will learn research-based co-teaching and delegation strategies to maximize the impact of their aides within the classroom. This ensures that instructional assistants are strategically deployed to provide targeted interventions for English Learners, rather than just offering generalized classroom help.

3. Supporting Integrated ELD in Core Content Areas
Because English Learners spend the majority of their day outside of explicit ELD classrooms, both teachers and aides require robust training on integrated ELD strategies. Action 9 will provide cross-training on how teacher-aide teams can effectively scaffold complex core content (such as Math, Science, and Social Studies). Staff will learn how to collaboratively utilize visual supports, reduce cognitive load, and clarify academic language in real-time so that students can access the core curriculum while acquiring English.

Expected Outcomes
By leveraging Action 9 to comprehensively train both our certificated teachers and instructional aides as a unified instructional team, Burbank Unified ensures that English Learners receive highly coordinated, high-quality support throughout their entire school day. Equipping our educators with these collaborative, research-based tools accelerates a student's progress toward reclassification and significantly reduces academic frustration—directly supporting our Differentiated Assistance goals of improving academic performance (Priority #4) and reducing chronic absenteeism and suspension rates (Priority #6) for our LTEL population.

To effectively address the evolving academic needs of our current student population—specifically our Long-Term English Learners (LTELs) and low-income students struggling to meet grade-level expectations—the District is strategically expanding Goal 1, Action 9 (Professional Development

Days for All Teachers and Staff).

Because base LCAP funding has not increased sufficiently over the past several years to sustain the costs of comprehensive, district-wide training, the District is allocating $750,000 in unspent Learning Recovery Block Grant (LRBG) funds to support this action for the 2026–2027 LCAP year, as well as the subsequent LCAP year.

Increasing Time and Reach for Comprehensive Training
Historically, professional development funding has been heavily constrained, limiting the amount of dedicated learning time and frequently restricting training to specific certificated groups. The infusion of the $750,000 LRBG allocation allows the district to significantly increase both the time and the reach of our professional development initiatives. This funding ensures we can sustain a robust day-and-a-half of targeted professional development and expand the reach to include all educators—both certificated classroom teachers and classified instructional staff (such as ELD Instructional Assistants). Learning recovery efforts will continue to be a focus for professional development opportunities as we remain focused on addressing gaps in learning through RTI, differentiated instruction, targeted scaffolding, and spiral review.

By training teaching teams collaboratively, we ensure that every adult interacting with our highest-need students is fully prepared to deliver cohesive, highly effective academic and behavioral interventions.

Research-Based Justification: The Best Use of Funds
Investing block grant funds directly into educator capacity is the most effective lever for accelerating student achievement. Educational research consistently demonstrates that collective teacher efficacy and high-quality Tier 1 classroom instruction are the most significant in-school factors impacting student learning outcomes.

Specifically regarding LTELs and socioeconomically disadvantaged students, research indicates that simply purchasing materials or providing isolated pull-out interventions is insufficient. Instead, students experiencing academic gaps require continuous access to highly trained educators who can provide:

Targeted Scaffolding: Teachers and aides trained to reduce cognitive load and provide real-time visual and linguistic supports so students can access complex, grade-level core content.

Integrated Language Development: Training staff on research-based integrated ELD strategies ensures that LTELs receive language support continuously throughout the day in math, science, and social studies, rather than just during a designated ELD block.

Responsive Pedagogy: Professional development equips staff with the instructional strategies necessary to identify specific academic barriers for low-income and English Learner students and pivot their instruction immediately to close those gaps.

By utilizing the LRBG funds to build adult capacity, the District is making a sustainable investment. While one-time materials eventually expire, the advanced pedagogical skills acquired by our teachers and staff will continue to benefit unduplicated students for years to come.

Monitoring Impact Through LCAP Metrics
To ensure the effectiveness of this $750,000 investment in professional development, the District

		will closely monitor the impact on our targeted student groups using the following specific data points identified in the Measuring and Reporting Results and Increased/Improved Services sections of the LCAP: Metrics 1.1–1.16 (CAASPP ELA & Math): We will monitor the direct impact of improved instructional practices on the academic growth of our unduplicated subgroups. Specifically, we will track the continued rebound and growth of CAASPP ELA and Math scores for our English Learners and Socioeconomically Disadvantaged (SED) students. Metrics 1.17–1.18 (ELPAC Progress & Reclassification Rates): By training all staff on ELD strategies and the new supplemental curriculum, we will measure success by tracking the progress of LTELs on the ELPAC and monitoring the district's overall reclassification rate (currently rebounding to 13.7%). Metrics 1.20–1.26 (Graduation Rates): As highly trained staff successfully engage and support struggling students, we will monitor the ultimate indicator of academic recovery: the sustained improvement of graduation rates for English Learners (currently at 94.5%) and socioeconomically disadvantaged students (currently at 96.8%).		
10	Elementary Response to Intervention for Reading/Language Arts, Math, and Socio-Emotional Learning (SEL)	The action being developed is based on the needs of English learners and socioeconomically disadvantaged students (low-income students). The following data set provides the reader with additional data for comparative purposes. ELA SBAC data indicates the following need to raise the percentage of students who meet or exceed the standard from the following 2022-23 baseline: All (58.43%); ELs (13.41%); SEDs (47.15%); Homeless (42.86%) Math SBAC data indicates the following need to raise the percentage of students who meet or exceed the standard from the following 2022-23 baseline: All (44.40%); ELs (15.14%); SEDs (32.74%); Homeless (28.58%) 22-23 ELPAC making progress rate is 57.7%. 2022-23 reclassification rate is 20.7% The data indicate that the needs of English learners and low-income students are significant. Intervention teachers and instructional assistants will: - Provide direct intervention to students at skill level provided by certificated classroom and intervention teachers using research-based materials - Utilize full-time curriculum specialists (at elementary) to provide direct support to students and manage the program - Utilize part-time intervention teachers and instructional assistants to provide direct support to students in ELA, Math, & SEL. - Provide direct intervention for underperforming students by certificated classroom and intervention teachers and instructional assistants - Utilize full-time curriculum specialists (at elementary) to provide direct support to students and manage the program - Utilize part-time intervention teachers and instructional assistants to provide direct support to students	$600,000.00	Yes

		- Create targeted Math Intervention sections at the middle schools - When the math intervention classes cannot be secured because of staffing, the budget funds can be used for aide support or supplemental materials. - Provide socio-emotional interventions for students identified as low-performing due to behavioral or social issues that impact their progress in academics. The outcome is to have students master State standards through the delivery of instruction that has high engagement practices, monitoring, assessments, and parent communication.		
11	Middle School School Psychologist (2.0 FTEs)	Approximately 40% of middle school students qualify for free/reduced lunch and about 20% of these same students experience a high rate of D/F grades. Additionally, about 10% of students in middle schools are English learners. These two psychologist positions serve all three unduplicated populations. They assess students, work with teachers to support the learning needs of students, provide professional development, consult with parents, and assist administrators. The work of the psychologists will help to lower the D/F rates of middle school students, increase attendance and increase test scores. The impact on English learners will be to maintain and increase performance on their daily work and the ELPAC.	$313,980.48	Yes
12	Behavior Specialists (9.0 FTEs)	Nine Behavior Specialists at schools will provide behavioral supports for low-income, students experiencing homelessness, and English learners. These Behavior Specialists will be working exclusively with the schools with high populations of targeted student subgroups. Anecdotal data indicates a rise in the number of students who have increasing behavior and academic needs. At the elementary level especially, the number of students requiring greater assistance has dramatically increased over the past three years going from one/two students in severe need to over 20 students across the district. These students are displaying major meltdowns and become physical to their peers and adults. Their parents are in crisis mode as they also want to work with their children and school staff. Behavior specialists work with teachers, instructional staff, administrators, and parents. Behavior specialists participate in student study teams, 504s, and Special Education. Supporting low-income, English learners and homeless youth will result in fewer outbursts, more focused students, greater attendance, and increased achievement as measured by SBAC data and attendance.	$984,168.42	Yes
13	English Learner Program, Supplemental Supports	There is a need to establish a baseline ELD program for students who are working towards English proficiency as English Learners. ELA SBAC data indicates the following need to raise the percentage of students who meet or exceed the standard from the following 2022-23 baseline: ELs (13.41%). Math SBAC data indicates the following need to raise the percentage of students who meet or exceed the standard from the following 2022-23 baseline: ELs (15.14%). 22-23 ELPAC making progress rate is 57.7%. 2022-23 reclassification rate is 20.7%	$513,398.64	Yes

		The program is designed to increase or improve services by: - Provide support for English Learner students in classes by Instructional Assistants - Provide supplemental materials and supplies to support site-based English Learner programs - Provide liaison support between the school and community for translation, parent contact, and parent education - Implement and monitor implementation of Master Plan for English Learners The work of instructional assistants paid by Maintenance of Effort funds provides support to teachers, instructional assistants and students will result in increases (or maintaining when at a high level like reclassification rate) in student achievement and teacher/instructional assistant effectiveness.		
14	Full Time Curriculum Specialists for nine elementary schools	The action being developed is based on the needs of English learners and socioeconomically disadvantaged students (low-income students). The following data set provides the reader with additional data for comparative purposes. ELA SBAC data indicates the following need to raise the percentage of students who meet or exceed the standard from the following 2022-23 baseline: All (58.43%); ELs (13.41%); SEDs (47.15%); Homeless (42.86%) Math SBAC data indicates the following need to raise the percentage of students who meet or exceed the standard from the following 2022-23 baseline: All (44.40%); ELs (15.14%); SEDs (32.74%); Homeless (28.58%) The Curriculum Specialists for nine of our elementary schools will increase or improve services through the following duties and tasks: Manage site assessments (including ELPAC) Manage and supervise site RTI program to support underperforming students Organize and conduct professional development Analyze data and review with staff Demonstrate lessons Provide direct intervention services to underperforming students in targeted subgroups including low-income students and English learners	$1,389,783.66	Yes
15	Library Coordinators at Elementary Schools	Provide focused services to English Learners, socioeconomically disadvantaged students, and students experiencing homelessness through the services that they provide. Services include a concentration on literacy-based skills, phonics, word recognition, comprehension, and other age-appropriate literacy standards. Stock and weed collections Manage information systems Manage school-wide Accelerated Reader Program Provide direct services to classes and targeted subgroup students Provide after-school access to the library for targeted subgroup students	$433,609.14	Yes
16	Targeted support for Twice Exceptional students who qualify as GATE and are included in the	BUSD believes in learning beyond the core curriculum by providing GATE enrichment activities and opportunities for unduplicated student groups who may not have access outside of school due to the cost of a program and other restrictions. The LCAP committee identified a need to provide activities during and after school hours in the area of GATE to connect students to school,	$70,000.00	Yes

	unduplicated count	create positive experiences, and develop connections with adults. This action provides improved and increased services principally directed toward unduplicated students who may not be exposed to GATE activities due to their home environment or financial constraints. This budgeted expenditure is to cover partial costs of the GATE program for students who are English learners and low-income students. This is an increased service to these unduplicated student groups as they benefit from participating in the GATE program and are challenged by the activities implemented through the program. Researchers have identified several barriers to student participation, ranging from the more tangible, including family or work responsibilities, limited resources for equipment or other expenses, and transportation or other logistical difficulties, to the more complex, such as lack of interest in or alienation from school and its activities (Kleese and D'Onofrio, 1994). Involvement in extracurricular activities also helps at-risk students. John Mahoney and Robert Cairns (1997) indicated that engagement in school extracurricular activities is linked to decreasing rates of early school dropouts in both boys and girls.		
17	Elementary Assistant Principals (Miller & Jefferson 2.0)	The action being developed is based on the needs of English learners and socioeconomically disadvantaged students (low-income students). The following data set provides the reader with additional data for comparative purposes. ELA SBAC data indicates the following need to raise the percentage of students who meet or exceed the standard from the following 2022-23 baseline: All (58.43%); ELs (13.41%); SEDs (47.15%); Homeless (42.86%) Math SBAC data indicate the following need to raise the percentage of students who meet or exceed the standard from the following 2022-23 baseline: All (44.40%); ELs (15.14%); SEDs (32.74%); Homeless (28.58%) The Assistant Principal at our two largest elementary schools will increase or improve services through the following duties and tasks: Manage site assessments (including ELPAC) Manage and supervise site RTI program to support underperforming students Organize and conduct professional development Analyze data and review with staff Demonstrate lessons Provide direct intervention services to underperforming students in targeted subgroups, including low-income students and English learners.	$273,446.70	Yes
18	Secondary Sheltered ELD Sections (Social Studies and Science)	The action being developed is based on the needs of English learners. The following data set provides the reader with additional data for comparative purposes. ELA SBAC data indicates the following need to raise the percentage of students who meet or exceed the standard from the following 2022-23 baseline: ELs (13.41%). Math SBAC data indicates the following need to raise the percentage of students who meet or exceed the standard from the following 2022-23 baseline: ELs (15.14%). 22-23 ELPAC making progress rate is 57.7%. 2022-23 reclassification rate is 20.7% Secondary Sheltered ELD Sections are designed to reduce class size or dedicate sheltered sections for ELD students in the subjects of Social Science and Science. These subjects are	$519,725.70	Yes

		language intensive subjects that require additional support from instructional staff to provide small group instruction and/or differentiation. Smaller class sized or dedicated sections will allow for teaching staff to better support english learners in these core subject areas.		
19	ELD Instructional Assistants, Secondary (5 FTE)	The action being developed is based on the needs of English learners. The following data set provides the reader with additional data for comparative purposes. ELA SBAC data indicates the following need to raise the percentage of students who meet or exceed the standard from the following 2022-23 baseline: ELs (13.41%). Math SBAC data indicates the following need to raise the percentage of students who meet or exceed the standard from the following 2022-23 baseline: ELs (15.14%). 22-23 ELPAC making progress rate is 57.7%. 2022-23 reclassification rate is 20.7% English Language Development Instructional Assistants - Provide additional hourly support in E/LA and ELD at the secondary level - Work with small groups of students to allow for differentiation and Tier II intervention - Assist teachers in the implementation of the ELD program - Assist teachers in the implementation of the RtI program The work of ELD instructional assistants provides support to teachers and students will result in increases (or maintaining when at a high level like reclassification rate) in student achievement and teacher/instructional assistant effectiveness on ELA and math SBAC. Addressing Differentiated Assistance for Long-Term English Learners (LTELs) As part of the District's strategic response to Year 2 Differentiated Assistance for our Long-Term English Learner (LTEL) student group, we have explicitly refined Goal 1, Action 19 (Secondary ELD Instructional Assistants) to clarify exactly who is doing what for whom. Who: Secondary ELD Instructional Assistants. Is Doing What: Providing highly targeted academic interventions and focused instructional support specifically within designated ELD classrooms. To ensure maximum effectiveness, these instructional aides will participate in dedicated professional development time where they will be explicitly trained on supportive mechanisms, the newly adopted secondary supplemental ELD curriculum, and advanced ELD instructional strategies tailored for older students. For Whom: Secondary Long-Term English Learners (LTELs) and older students at risk of becoming LTELs who are currently receiving instruction in designated ELD classrooms. Expected Outcomes and Dashboard Alignment This action will be specifically utilized to support secondary LTELs in accelerating their active performance on various state and local assessments, ultimately helping them overcome the specific hurdles to reclassification and successfully transition into mainstream English Language Arts classrooms.	$846,673.44	Yes

		By utilizing highly trained instructional aides to provide accessible, sequentially supportive academic interventions right inside the ELD classroom, the district aims to reduce the profound student frustration and disengagement often experienced by secondary LTELs. Therefore, this direct academic support acts as a critical lever to address the specific Differentiated Assistance dashboard indicators: it will improve overall student performance in ELA and Math (Priority #4), while simultaneously increasing school connectedness and engagement to help reduce chronic absenteeism and suspension rates (Priority #6) for our vulnerable secondary LTEL population.		
20	Culturally Responsive Pedagogy PD (K-12 PLCs in ELA & Math)	The action being developed is based on the needs of English learners and socioeconomically disadvantaged students (low-income students). The following data set provides the reader with additional data for comparative purposes. ELA SBAC data indicates the following need to raise the percentage of students who meet or exceed the standard from the following 2022-23 baseline: All (58.43%); ELs (13.41%); SEDs (47.15%); Homeless (42.86%) Math SBAC data indicates the following need to raise the percentage of students who meet or exceed the standard from the following 2022-23 baseline: All (44.40%); ELs (15.14%); SEDs (32.74%); Homeless (28.58%) 22-23 ELPAC making progress rate is 57.7%. 2022-23 reclassification rate is 20.7% The data indicate that the needs of English learners and low-income students are significant. Culturally Responsive Pedagogy PD will create time and space for teachers to work in professional learning communities with identified lead teachers, site administration, and district administration. Collaboration will be focused on instructional practices including our district work in diversity, equity, and inclusion as well as the following: - Equity in grading - Best practices in culturally relevant instruction - Research interventions - The DuFour's essential questions for professional learning communities - Local data from formative assessments and district benchmarks - Plan-Do-Study-Act Cycles	$150,000.00	Yes
21	RTI Assessment Programs (i-Ready Assessment & School City)	The action being developed is based on the needs of English learners and socioeconomically disadvantaged students (low-income students). The following data set provides the reader with additional data for comparative purposes. ELA SBAC data indicates the following need to raise the percentage of students who meet or exceed the standard from the following 2022-23 baseline: All (58.43%); ELs (13.41%); SEDs (47.15%); Homeless (42.86%) Math SBAC data indicates the following need to raise the percentage of students who meet or exceed the standard from the following 2022-23 baseline: All (44.40%); ELs (15.14%); SEDs (32.74%); Homeless (28.58%) 22-23 ELPAC making progress rate is 57.7%.	$200,000.00	Yes

		2022-23 reclassification rate is 20.7% The data indicate that the needs of English learners and low-income students are significant. RTI Assessment Programs will provide students, staff, and families with performance data to make data-driven decisions regarding interventions for individual, small-group, and whole-group instructional practices. Data will be used to guide professional learning community work in course-alike cohorts as well as grade-level cohorts. Local data is essential in meeting the local indicators on the CA Dashboard. These local assessments will help measure the successful implementation of California State Standards.		
22	Outdoor Science School Support Funding	The action being developed is based on the needs of English learners and socioeconomically disadvantaged students (low-income students). The following data set provides the reader with additional data for comparative purposes. ELA SBAC data indicates the following need to raise the percentage of students who meet or exceed the standard from the following 2022-23 baseline: All (58.43%); ELs (13.41%); SEDs (47.15%); Homeless (42.86%) Math SBAC data indicates the following need to raise the percentage of students who meet or exceed the standard from the following 2022-23 baseline: All (44.40%); ELs (15.14%); SEDs (32.74%); Homeless (28.58%) CAST (Science) Data indicates the following need to raise the percentage of students who meet or exceed the standard from the following 2023-24 baseline in 5th grade: All (45.94%) ; ELs, (4.39%); SEDs (31.37%); Homeless (**%) The 2022-23 reclassification rate is 20.7% The data indicate that the needs of English learners and low-income students are significant. Exposure to outdoor science will increase interest and motivation to improve mastery in the subject of science. The Outdoor Science School gives students opportunities to experience science firsthand that cannot be replicated in a standard classroom. The outcome is to have students master State standards through the delivery of instruction that has high engagement practices, monitoring, assessments, and parent communication.	$20,000.00	Yes
23	GATE Program Annual Identification Assessment Process	- Provide training for teachers and administrators on the CogAT-7 GATE identification instrument - Purchase CogAT-7 assessments for all 3rd grade students and nominated/recommended students at other grade levels - Fund additional psychologist time for students who qualify to take the WISC-V or WNV assessments - Provide extra duty for teacher test administrators State of California Priorities: Priority One: Basic (Conditions of Learning) Priority Two: State Standards (Conditions of Learning) Priority Three: Parental Involvement (Engagement) Priority Four: Pupil Achievement (Pupil Outcomes) Priority Five: Pupil Engagement (Engagement)	$20,000.00	No

		Priority Seven: Course Access (Conditions of Learning) BUSD Board of Education Goal 1: Students will be career/college ready via high-quality instruction		
24	District GATE Coordinator	Provide one (0.2 FTE) certificated teacher to coordinate and support the District's GATE program	$25,658.00	No
25	Music Instrument Repair and Replacement	- Provide funding to all secondary school sites for instrumental repair and replacement - Repair or replace damaged or worn-out instruments State of California Priorities: Priority One: Basic (Conditions of Learning) Priority Two: State Standards (Conditions of Learning) Priority Four: Pupil Achievement (Pupil Outcomes) Priority Five: Pupil Engagement (Engagement) Priority Seven: Course Access (Conditions of Learning) BUSD Board of Education Goal 1: Students will be career/college ready via high-quality instruction	$20,000.00	No
26	Secondary Art Supplies and Materials	- Provide additional funding for visual arts classes - Increase available art supplies and materials for students - Replace damaged or worn-out art supplies and materials State of California Priorities: Priority One: Basic (Conditions of Learning) Priority Two: State Standards (Conditions of Learning) Priority Four: Pupil Achievement (Pupil Outcomes) Priority Five: Pupil Engagement (Engagement) Priority Seven: Course Access (Conditions of Learning) BUSD Board of Education Goal 1: Students will be career/college ready via high-quality instruction	$12,600.00	No
27	Provide support for students with disabilities to achieve their Individual Education Plan (IEP) goals.	This budgeted expenditure includes all of the salaries and benefits for Special Education Services across the District. This Special Education expenditure also includes non-public school, contracted services, plus supplies and services, transportation, and instructional assistant personnel. State of California Priorities: Priority One: Basic (Conditions of Learning) Priority Two: State Standards (Conditions of Learning) Priority Three: Parental Involvement (Engagement) Priority Four: Pupil Achievement (Pupil Outcomes) Priority Five: Pupil Engagement (Engagement) Priority Seven: Course Access (Conditions of Learning) BUSD Board of Education Goal 1: Students will be career/college ready via high-quality instruction	$39,217,554.00	No
28	Elementary Music	Elementary music teachers will:	$537,498.00	No

	Teachers Staffing	- Provide weekly music instruction - Annually determine the grade level that will be served for music instruction based on financial conditions - Increase when [possible the instructional minutes for elementary music Im-plement components of the District's Arts for All Plan State of California Priorities: Priority One: Basic (Conditions of Learning) Priority Two: State Standards (Conditions of Learning) Priority Three: Parental Involvement (Engagement) Priority Four: Pupil Achievement (Pupil Outcomes) Priority Five: Pupil Engagement (Engagement) Priority Seven: Course Access (Conditions of Learning) BUSD Board of Education Goal 1: Students will be career/college ready via high-quality instruction		
29	Provide CTE Pathway offerings to Secondary Students	Provide instruction, course offerings, and appropriate staffing to maintain current CTE Pathways. Provide Instructional Materials for CTE courses. Povide licenses and membership fees associated with CTE courses.	$1,269,998.00	No
30	World Language Courses at Middle Schools	- Maintain Spanish 1 classes at each middle school - Provide students with one-year completion to meet UC/CSU A-G requirement for work language - Allow students to continue work language instruction upon entering high school State of California Priorities: Priority One: Basic (Conditions of Learning) Priority Two: State Standards (Conditions of Learning) Priority Three: Parental Involvement (Engagement) Priority Four: Pupil Achievement (Pupil Outcomes) Priority Five: Pupil Engagement (Engagement) Priority Seven: Course Access (Conditions of Learning) BUSD Board of Education Goal 1: Students will be career/college ready via high-quality instruction	$399,101.00	No

Goal

Goal #	Description	Type of Goal
2	Students will be physically, emotionally, and mentally healthy and supported through Parental Involvement as measured by State, federal, and District assessment tools including the California Dashboard. (Educational Services) State of California Priorities: Priority One: Basic (Conditions of Learning) Priority Two: State Standards (Conditions of Learning) Priority Three: Parental Involvement (Engagement) Priority Four: Pupil Achievement (Pupil Outcomes) Priority Five: Pupil Engagement (Engagement) Priority Six: School Climate (Engagement) Priority Seven: Course Access (Conditions of Learning) Priority Eight: Other Pupil Outcomes (Pupil Outcomes)	Broad Goal

State priorities addressed by this goal.

1, 2, 3, 4, 5, 6, 7, 8

An explanation of why the LEA has developed this goal.

Goal 2 was created to ensure the students in Burbank Unified School District are in a learning environment that is safe. Students will not be able to engage in academic discourse if they do not feel safe physically or emotionally. Therefore, the mental health and wellness of students are addressed in this goal, included but not limited to:

- Access to more psychologists
- Access to intervention specialists
- Access to behavior specialists
- Access to intervention counselors
- Access to mental health and wellness center
- Access to more nurses
- Implementation of PBIS
- Inclusion of parental involvement

Metrics for this goal will measure the completion of requirements to graduate from high school. We will closely monitor identified subgroups to make sure the graduation rate increases appropriately based on historic performance and/or achievement gaps. Additionally, survey results and other measures will help us identify areas where students may disengage with school such as attendance, behaviors, or perceptions towards staff, and school climate.

Measuring and Reporting Results

Metric #	Metric	Baseline	Year 1 Outcome	Year 2 Outcome	Target for Year 3 Outcome	Current Difference from Baseline
1	Percentage of students completing the A-G requirements. The completion rate will increase by 2% percentage points per year until students reach the highest level of performance as reported on the California Dashboard.	In 2022-2023, 48.0% of high school students met A-G completion rate	In 2023-2024 47.1% of high school students met A-G completion requirements	In 2024-2025, 49.2% of high school students met A-G completion requirements	All students who meet A-G requirements will increase by 6 percentage points by year 3.	The percentage of students completing the A-G requirements increased by 1.2%
2	Graduation Rate for All Students will increase by 1 percentage point over 3 years as reported on the California Dashboard.	In 2022-2023 93.2% of All Students were graduated from high school	In 2023-2024 96.3% of All Students were graduated from high school	In 2024-2025, the District-wide graduation rate was 97.4% for all students. Monterey – 98.4%	All Students who are graduated from high school will increase by 1 percentage points by year 3.	The graduation Rate for All Students increased by 4.2%

3	Graduation Rate of English Learners will increase by 2 percentage points over 3 years as reported on the California Dashboard.	In 2022-2023, 80.6% of English Learners were graduated from high school	In 2023-2024, 91.3% of English Learners graduated	In 2024-2025, 95.6% of English Learners graduated	English Learners who are graduated from HS will increase by 2 percentage points by year 3.	The graduation Rate of English Learners increased by 15.0%
4	Graduation Rate of Socio-Economically Disadvantaged Students will increase by 2 percentage points over 3 years as reported on the California Dashboard.	In 2022-2023, 91.0% of Socio-economically Disadvantaged Students were graduated from high school	In 2023-2024, 95.1% of Socio-economically Disadvantaged Students graduated	In 2024-2025, 95.5% of Socio-economically Disadvantaged Students graduated Monterey 97.8%	Socio-economically Disadvantaged Students who graduate from HS will increase by 2 percentage points by year 3.	The graduation Rate of Socio-Economically Disadvantaged Students increased by 4.5%
5	Graduation Rate for Homeless Students will increase by 2 percentage points over 3 years as reported on the California Dashboard.	In 2022-2023, 90.9% of Homeless Students were graduated from high school	In 2023-2024, 85.2% of Homeless Students graduated	In 2024-2025, 95.2% of Homeless Students graduated	Homeless Students who are graduated from high school will increase by 1 percentage points by year 3.	The graduation Rate for Homeless Students increased by 4.3%

6	Graduation Rate for Foster Youth will increase by 1 percentage points over 3 years as reported on the California Dashboard.	In 2022-2023, 12 out of 16 Foster Youth graduated (Local SIS Data)	In 2023-2024, 9 out of 11 Foster Youth graduated (Local SIS Data)	In 2024-2025, 10 out of 11 Foster Youth graduated (Local SIS Data)	Foster Youth who are graduated from high school will increase by 1 percentage points by year 3.	The graduation Rate for Foster Youth increased from 75% to 91%, an increase of 16% based on local SIS Data
7	Graduation Rate for Students with Disabilities will increase by 2 percentage points over 3 years as reported on the California Dashboard.	In 2022-2023, 88.3% of Students with Disabilities were graduated from high school	In 2023-2024, 88.3% of Students with Disabilities graduated	In 2024-2025, 89.8% of Students with Disabilities graduated	Students with Disabilities who are graduated from high school will increase by 2 percentage points by year 3.	The graduation Rate for Students with Disabilities increased by 1.5%
8	Graduation Rate for Hispanic Students will increase by 1 percentage points over 3 years as reported on the California Dashboard.	In 2022-2023, 94.0% of Hispanic Students were graduated from high school	In 2023-2024, 96.0% of Hispanic Students graduated	In 2024-2025, 97.0% of Hispanic Students graduated	Hispanic Students who are graduated from high school will increase by 1 percentage points by year 3.	The graduation Rate for Hispanic Students increased by 3.0%

9	Suspension Rate District wide will be maintained or at least decrease by 1 percentage point over 3 years as reported on the California Dashboard.	In 2022-2023, 3.2% of students were suspended at least once	In 2023-2024, 2.7% of students were suspended at least once	In 2024-2025, 2.5% of students were suspended at least once	Decrease suspension rate by 1% district wide or maintain Green or advance to Blue on the Dashboard	The suspension Rate District wide declined by 0.7%
10	School Attendance Rate will increase by 1 percentage point over 3 years as reported on the California Dashboard/Data Quest.	In 2022-2023, the attendance rate was 91.71%	In 2023-2024, the attendance rate was 93.0%	In 2024-2025, the attendance rate was 94.2%	School attendance rate will increase by 1 percentage points by year 3.	School Attendance Rate increased by 2.49%
11	Chronic Absenteeism Rate will decrease by 9 percentage points over 3 years as reported on the California Dashboard.	18.9% of students are chronically absent in 2022-2023 (Dashboard)	In 2023-2024, 13.4% of students are chronically absent (Dashboard)	In 2024-2025, 11.8% of students are chronically absent (Dashboard)	Chronic absenteeism decreaes by 9 percentage points by year 3 or maintain Green level or Blue level on CA Dashboard indicator.	The Chronic Absenteeism Rate decreased by 7.1%

12	Four Year Adjusted Cohort Graduation Rate will increase by 1 percentage point over 3 years as reported on the California Dashboard/Data Quest.	In 2022-2023, the four year adjusted cohort graduation rate was reported as 93.2%	In 2023-2024, the four-year adjusted cohort graduation rate was reported as 96.2%	In 2024-2025, the four-year adjusted cohort graduation rate was reported as 97.4% (Dataquest).	The four-year adjusted cohort graduation will increase by 1 percentage points by year 3.	The Four Year Adjusted Cohort Graduation Rate increased by 4.2%
13	Middle School Drop Out Rate will remain at 0% annually as reported by our local student information system (AERIES) and CALPADS.	In 2022-2023, Middle school dropout rate remains at 0% (CALPADs)	In 2023-2024, middle school dropout rate remains at 0% (CALPADs)	In 2024-2025, middle school dropout rate remains at 0% (CALPADs)	Middle school dropout rate will be maintined at 0%	The Middle School Drop Out Rate remains unchanged
14	Percent of Student Expulsions from the District will reduce/maintain at a rate lower than the state on an annual basis as reported on the California Dashboard.	In 2022-2023, no students were expelled from the District (CALPADs)	In 2023-2024, no students were expelled from the District (CALPADs)	In 2024-2025, no students were expelled from the District (CALPADs)	Student Expulsions from the District will be maintained at a rate lower than the state on an annual basis	The percent of Student Expulsions from the District remains unchanged

15	Survey and other local measures of pupils, parents, and staff, on the sense of safety will improve by 6 percentage points over 3 years.	In 2022-2023, School Satisfaction Survey analysis indicated the following: Children are safe at school - Staff - 76%; Students - 60%; Parents - 73%	In 2023-2024, School Satisfaction Survey analysis indicated the following: Children are safe at school - Staff - 80%; Students - 59%; Parents - 79%	In 2024-2025, School Satisfaction Survey analysis indicated the following: Children are safe at school - Staff - 82%; Students - 74%; Parents - 84%	Pupils, parents, and staff, sense of safety will increase by 6 percentage points by year 3.	Survey and other local measures of pupils, parents, and staff, on the sense of safety changed as follows: Staff increased by 6%; Students increased by 14%; Parents increased 11%
16	Surveys of pupils, parents, and staff, on the sense of care will improve by 6 percentage points over 3 years	In 2022-2023, School Satisfaction Survey analysis indicated the following: School is a positive and supportive learning environment: Staff - 82%; Students - 64%; Parents: 75%	In 2023-2024, School Satisfaction Survey analysis indicated the following: School is a positive and supportive learning environment: Staff - 89%; Students - 57%; Parents: 79%	In 2024-2025, School Satisfaction Survey analysis indicated the following: School is a positive and supportive learning environment: Staff - 83%; Students - 70%; Parents: 79%	Pupils, parents, and staff sense of care will improve by 6 percentage points by year 3.	Surveys of pupils, parents, and staff, on the sense of care changed as follows: Staff increased by 1%; Students increased by 6%; Parents increased by 4%
17	Surveys of pupils, parents, and staff, on the sense of connectedness will improve by 6 percentage points over 3 years.	In 2022-2023, School Satisfaction Survey analysis indicated the following: We treat each other with respect: Staff - 72%; Students - 65%; Parents - 82%	In 2023-2024, School Satisfaction Survey analysis indicated the following: We treat each other with respect: Staff - 88%; Students - 64%; Parents - 78%	In 2024-2025, School Satisfaction Survey analysis indicated the following: We treat each other with respect: Staff - 85%; Students - 79%; Parents - 80%;	Pupils, parents, and staff sense of connectedness will improve by 6 percentage points by year 3.	Surveys of pupils, parents, and staff, on the sense of connectedness changed as follows: Staff increased by 13%; Students increased by 14%; Parents decreased by 2%.

Goal Analysis for 2025-2026

An analysis of how this goal was carried out in the previous year.

A description of overall implementation, including any substantive differences in planned actions and actual implementation of these actions, and any relevant challenges and successes experienced with implementation.

Overall Implementation & Successes The overall implementation of all actions in Goal 2 during the 2025–2026 school year reflected the District’s continued commitment to

student wellness and our evolving, data-informed approach to supporting physical, emotional, and mental health. Following comprehensive evaluations with our educational partners during the previous cycle, 2025-2026 served as the foundational year for our strategic pivot toward more proactive, school-based mental health and behavioral supports. Overall, implementation was highly successful, and educational partners have agreed to "stay the course" with our current actions and budget.

A major success of this year's implementation was the successful rollout of the newly established Elementary Wellness and Behavior Specialists (3 FTE) (Action 2.4). Having transitioned away from the previous model of broad academic intervention specialists, these new roles were embedded across school sites to provide more of a case management approach. This targeted approach has yielded positive early indicators in managing extreme behavioral outbursts and improving school climate.

Other successes include the continued effectiveness of the SOAR program (Action 2.7) in its second year, which successfully maintained its staffing and behavioral support structures to serve students with intensive needs. Similarly, Monterey High School (Action 2.1) was successfully supported with 5.0 FTEs, underscoring its immense value in providing credit recovery and graduation pathways for an enrollment primarily comprised of unduplicated students. Furthermore, the district successfully administered the Hanover School Climate & Mental Health Surveys (Action 2.6) during the Fall and Spring windows to capture vital, anonymous feedback from educational partners.

These systemic successes are becoming evident in our local and state metrics. Chronic absenteeism, which had previously decreased to 13.4% in 2023-2024, has continued to decline at 11.8% according to the 2025 California Dashboard. Suspension rates have also declined at 2.5%. Furthermore, graduation rates for English Learners and socioeconomically disadvantaged students have continued to rise significantly, indicating that this broader system of holistic support is contributing directly to long-term academic and social success (Actions 2.1, 2.2, 2.3, and 2.5).

Challenges and Substantive Differences Because the 2025-2026 LCAP was heavily vetted and restructured to match current realities, the actions in Goal 2 were executed with a high degree of fidelity to the plan, resulting in very few substantive differences. The District successfully discontinued the extra research expenses previously utilized for care center evaluations through Hanover, redirecting those funds to sustain direct services, exactly as planned.

However, relevant challenges were still experienced during implementation. While the new Elementary Wellness and Behavior Specialists were successful, initial challenges arose in managing high caseloads across multiple sites as well as placement decisions of which sites they would support based on a distribution of students in need of caseload management. Despite these logistical challenges, the District's adaptive, student-centered approach ensured that critical services reached our most vulnerable populations.

Specific Actions: * Action 2.1 – Monterey Teachers (5.0 FTEs)

Implementation: Fully implemented. (Note: FTE updated to 5.0 based on 25-26 mid-year projections).

Targeted subgroups: Low Income, English Learners, Foster/Homeless Youth

Analysis: Successfully supported credit recovery and graduation success for unduplicated students at Monterey High School through small group instruction, flexible scheduling, and individualized academic support.

Action 2.2 – Family Services Agency of Burbank (FSA) Counseling Program

Implementation: Fully implemented with minor adjustments based on specific site needs.

Targeted subgroups: Low Income, English Learners, Foster/Homeless Youth

Analysis: Effectively provided vital mental health services for students lacking access outside of school; improved emotional safety, attendance, and academic engagement.

Action 2.3 – Secondary Summer School Credit Recovery

Implementation: Fully implemented with a focus on supporting students taking courses through surrounding organizations and platforms (e.g., Apex).

Targeted subgroups: Low Income, English Learners, Foster/Homeless Youth

Analysis: Offered crucial credit recovery in core subjects for students who previously failed courses; helped maintain graduation eligibility and actively reduced dropout risks.

Action 2.4 – Elementary Wellness & Behavior Specialists (3.0 FTE)

Implementation: Fully implemented as a newly redesigned action for 25-26.

Targeted subgroups: Low Income, English Learners, Foster/Homeless Youth

Analysis: Replaced the previous academic intervention model to directly address behavioral challenges and emotional regulation. By focusing on school-based mental health, character building, and crisis response, these specialists successfully improved student engagement and school climate.

Action 2.5 – Homeless/Foster/At-Risk Youth Specialist (0.5 FTE)

Implementation: Fully implemented with consistent practices and cross-agency communication.

Targeted subgroups: Foster Youth, Homeless Students

Analysis: Provided essential advocacy, attendance monitoring, and individualized support for accessing academic programs; significantly improved resource coordination for the District's most vulnerable students.
Action 2.6 – School Climate & Mental Health Surveys (Hanover)
Implementation: Fully implemented according to the planned Fall 2024 and Spring 2025 timelines.
Targeted subgroups: Low Income, English Learners, Foster/Homeless Youth
Analysis: Collected anonymous feedback from students, families, and staff; informed district planning and accurately measured growth in school climate and mental health metrics.
Action 2.7 – Partial SOAR Program Staffing (CDS) (1 teacher; 1 para; 2 specialists)
Implementation: Fully implemented with minor ongoing refinements as the program entered its second year.
Targeted subgroups: Low Income, English Learners, Foster/Homeless Youth
Analysis: Successfully supported alternative education for students with significant behavioral challenges; provided small class sizes, individualized instruction, behavioral interventions, and vital case management across secondary sites.

An explanation of material differences between Budgeted Expenditures and Estimated Actual Expenditures and/or Planned Percentages of Improved Services and Estimated Actual Percentages of Improved Services.

Summary: Overall, the district experienced a net underspending of approximately $41,974 for Goal 2 contributing initiatives. This variance was largely driven by a mix of staffing-related shifts, such as lower salary placements and unfilled positions in some programs, offset by higher salary placements and increased staffing costs in other specialized areas. The most significant underspending occurred in Secondary Summer School Credit Recovery (Action 2.3), which saw expenditures come in $76,000 under budget due to fewer sections being needed as a result of successful credit recovery during the regular school year, along with the use of site funds that didn't require district supplemental support. Other areas with lower-than-expected expenditures included Partial SOAR Program Staffing and School Climate & Mental Health Surveys.
Conversely, some areas saw higher-than-anticipated costs. Notably, expenditures increased for Elementary Wellness & Behavior Specialists, Monterey Teachers, and the Homeless/Foster/At-Risk Youth Specialist. These increases were primarily attributed to higher salary placements for highly qualified hires and necessary adjustments to ensure continuity of specialized student support services.
Despite these fluctuations, the district maintained its commitment to the core objectives of Goal 2: supporting the physical, emotional, and mental health of students and providing targeted behavioral interventions. The adjustments made reflect a responsive approach to evolving needs, balancing fiscal responsibility with the goal of sustaining and improving wellness and educational outcomes for unduplicated students.
Analysis: Staff salaries and benefits were higher than anticipated due to the retention of highly experienced personnel and step increases on the salary schedule.
Action 2.3 – Secondary Summer School Credit Recovery
Variance: Decrease in expenditures (Planned: $100,000 | Actual: $24,000).
Targeted subgroups: Low Income, English Learners.
Analysis: Expenditures were significantly lower due to a reduction in the number of required sections, as well as the utilization of alternate grant funding to cover a portion of the operational costs.
Action 2.4 – Elementary Wellness & Behavior Specialists (3 FTE)
Variance: Increase in expenditures (Planned: $264,580 | Actual: $328,953).
Targeted subgroups: Low Income, English Learners, Foster Youth.
Analysis: The district retained highly qualified specialists to fill these critical new roles; staff salaries were higher than anticipated due to advanced placement on the salary scale.

A description of the effectiveness or ineffectiveness of the specific actions to date in making progress toward the goal.

Summary: The evaluation of Goal 2, which focuses on supporting the physical, emotional, and mental health of students, reveals a highly encouraging picture of progress within the Burbank Unified School District (BUSD). During the 2025–2026 school year, the District fully realized a strategic pivot away from broad academic interventions toward targeted, proactive, school-based mental health and behavioral supports. A thorough analysis of our metrics and implementation data indicates that this philosophical shift was highly effective in addressing the evolving needs of our student populations.

During the 2025–2026 cycle, BUSD committed substantial supplemental funding toward Goal 2 initiatives. These included expanded support for Monterey High School teachers (Action 2.1), the Family Services Agency (FSA) counseling program (Action 2.2), secondary summer school credit recovery (Action 2.3), and the newly designed Elementary Wellness and Behavior Specialists (Action 2.4). Because the 2025-2026 LCAP was heavily vetted and restructured to remove previously ineffective actions (such as the former 11 FTE Academic Intervention Specialists), the updated suite of actions has yielded measurable and positive outcomes.

A particularly notable success from the 2025–2026 plan was the implementation of the three Elementary Wellness and Behavior Specialist positions (Action 2.4), budgeted at $324,429. This strategic pivot directly addressed the reality that extreme emotional and behavioral challenges often underlie academic struggles. By shifting resources to highly trained behavioral specialists, the District effectively took a progressive step in curtailing extreme behavioral outbursts, supporting emotional regulation, and providing critical crisis response across elementary sites.

Other actions under Goal 2 continued to demonstrate clear effectiveness. Monterey Teachers (Action 2.1) received sustained funding for 5.0 FTEs, proving invaluable in supporting credit recovery and driving up graduation rates for a student body largely comprising unduplicated pupils. The SOAR program (Action 2.7), entering its second year of implementation, also proved effective as a critical alternative education setting for students requiring intensive behavioral interventions.

To assess the broader effectiveness of these actions, BUSD continues to closely monitor local and state metrics. Chronic absenteeism, which had previously decreased to 13.4% in 2023-2024, has continued to decline at 11.8% according to the 2025 California Dashboard. Suspension rates have also declined at 2.5%. Furthermore, graduation rates for key subgroups such as English Learners and socioeconomically disadvantaged students have continued to rise. The graduation rate for homeless students, which had previously declined, has shown signs of stabilization and improvement to 95.2%, indicating that the targeted advocacy provided by the Homeless/Foster/At-Risk Youth Specialist (Action 2.5) is making a positive impact.

In summary, the actions taken under Goal 2 during the 2025–2026 school year were highly effective. The District's focused approach on behavioral health and wellness supports is exceptionally well-aligned with our evolving understanding of student needs. Because these actions are working as anticipated, BUSD educational partners have agreed to continue actions for the 2026–2027 plan, allowing these vital support systems to fully mature and continue fostering a responsive, safe, and engaging educational environment for all students.

Specific Actions:

Action 2.1 – Monterey Teachers (5.0 FTEs)

Effective (Metrics 2.2–2.8 & 2.12: Graduation Rates). Successfully supported credit recovery, engagement, and graduation success for unduplicated students at Monterey High School through smaller learning environments. Overall graduation rates reached 97.4%, with English Learners consistently increasing to 94.5% and socioeconomically disadvantaged students increasing to 96.8%, demonstrating effective increased services for these target groups.

Action 2.2 – Family Services Agency of Burbank (FSA) Counseling Program

Effective (Metrics 2.10, 2.11, 2.12, 2.13, 2.16, & 2.17: Attendance, Discipline, & School Climate). Significantly expanded access to necessary mental health services; directly improved emotional safety, attendance, and academic engagement for unduplicated students. This targeted support contributed to a significant decrease in chronic absenteeism (improving from an 18.9% baseline down to 13.4%) and a decline in overall suspension rates, highlighting the positive impact on school climate for vulnerable subgroups.

Action 2.3 – Secondary Summer School Credit Recovery

Effective (Metrics 2.2–2.8 & 2.12: Graduation Rates). Provided crucial credit recovery opportunities in core subjects; successfully supported graduation eligibility and dropout prevention for students who had previously failed courses. This supplemental intervention directly contributed to the overall graduation rate increasing to 97.4% and the socioeconomically disadvantaged graduation rate rising to 96.8%.

Action 2.4 – Elementary Wellness & Behavior Specialists (3.0 FTEs)

Effective (Metrics 2.9–2.14: Discipline & School Climate). Successfully replaced the former academic intervention model to directly address severe behavioral challenges and emotional dysregulation. These specialized staff members effectively improved school climate, reduced extreme behavioral incidents, and provided essential crisis response, supported by declining suspension and expulsion rates across elementary sites for unduplicated pupils.

Action 2.5 – Homeless/Foster/At-Risk Youth Specialist (0.5 FTE)
Effective (Metrics 2.5, 2.6, 2.9, 2.10, 2.12, 2.13, & 2.14: Foster & Homeless Graduation Rates, Discipline, & School Climate). Provided targeted advocacy, cross-agency coordination, and immediate access to services, stabilizing the educational experience for the District's most vulnerable youth. Because of this targeted intervention, graduation rates for homeless students showed a successful rebound, improving from 85.2% to 88.9%.

Action 2.6 – School Climate & Mental Health Surveys (Hanover)
Effective (Metrics 2.15–2.17: School Climate). Effectively gathered actionable, anonymous feedback on school climate and mental health during the Fall and Spring windows, directly informing site-level engagement planning. Survey results confirmed a positive school climate driven by site-level DEI and wellness initiatives, with 85% of staff, 80% of parents, and 79% of students agreeing that "we treat each other with respect."

Action 2.7 – Partial SOAR Program Staffing (CDS) (1 teacher; 1 para; 2 specialists)
Effective (Metrics 2.2–2.8 & 2.12: Graduation Rates & Discipline). Successfully supported alternative education and specialized behavioral interventions for unduplicated secondary students with intensive needs. This targeted support provided necessary interventions that contributed to declining discipline rates and the notable increases in graduation rates for English Learners (94.5%) and socioeconomically disadvantaged students (96.8%).

A description of any changes made to the planned goal, metrics, target outcomes, or actions for the coming year that resulted from reflections on prior practice.

Reflections on the implementation of Goal 2 during the 2025–2026 school year have led to a collective decision by the Burbank Unified School District (BUSD) and our educational partners to "stay the course" for the upcoming 2026–2027 LCAP. Because the District executed a major restructuring of supplemental funding and actions in the previous year to more effectively support students' physical, emotional, and mental well-being, the focus for the coming year is to allow these newly established, highly effective programs to fully mature and solidify. Therefore, no substantive changes are being made to the planned goal, metrics, target outcomes, or actions for the 2026-2027 cycle.

Maintaining Metrics and Target Outcomes: The metrics used to evaluate Goal 2 will remain consistent with the refined focus established last year. While traditional academic indicators remain important, the District will continue to place heavy emphasis on behavioral and wellness metrics. These include chronic absenteeism, which dropped from 18.9% in 2022–2023, to 13.4% in 2023–2024, and has continued to decline to 13.1%, as well as suspension rates, which have also remained low and declined at 2.5%. These sustained improvements confirm that the District's investments in targeted mental health support are yielding positive results. Going forward, BUSD will continue to monitor these indicators closely alongside student and parent survey data. An addition was made to our graduation metrics. 2.2 and 2.4 to specifically monitor the graduation rate for Monterey HS as there are significant financial investments in goal 2 to support the student population at our continuation school (Monterey).

In summary, the 2026–2027 LCAP represents a commitment to stability and continuous improvement. By reflecting on the successes of the major structural changes made during the 2025–2026 cycle, BUSD and its educational partners have chosen to deliberately maintain the current actions, metrics, and target outcomes. This ensures that our targeted behavioral and wellness supports can achieve maximum direct impact for our students in the post-pandemic educational landscape.

A report of the Total Estimated Actual Expenditures for last year's actions may be found in the Annual Update Table. A report of the Estimated Actual Percentages of Improved Services for last year's actions may be found in the Contributing Actions Annual Update Table.

Actions

Action #	Title	Description	Total Funds	Contributing

1	Monterey Teachers (4.0 FTEs)	Four additional teachers at Monterey High School will provide instructional services to unduplicated students in the continuation school environment. - The continuation high school serves a large number of students who represent our low-income students, English learners, and homeless students. - Will increase services to unduplicated students by giving teachers greater opportunities to provide individualized instruction to meet unique student needs. - Low-income, English learners, and homeless youth within this smaller setting will receive small group instruction more regularly, increased 1:1 instruction, closely monitored academic progress, and increased intervention beginning with Tier II and then advancing to Tier III as needed - Increasing teachers will improve communication with parents about the academic and behavioral progress of the unduplicated students on this campus.	$578,862.24	Yes
2	Family Services Agency of Burbank (FSA) Counseling Program	English learners and low-income students have shown to have limited access to personal counseling as these families have voiced the inability to procure these services on their own. Research shows that when students are feeling emotionally safe, they are focused on their studies and perform better academically. Unduplicated student groups benefit from this service as targeted funding gives an avenue for students to seek assistance from an outside agency as students may not feel comfortable talking with school district staff. Students may feel more comfortable talking with someone who has less affiliation with the school. The Family Services Agency of Burbank (FSA) provided counseling and mental health services for low-income students and English learners. Academic achievement counseling may also occur depending on the student's needs. The result will be a student who has someone to turn to and help to work with through crisis situation and positively impact his/her academic, social-emotional, and behavioral issues.	$134,130.00	Yes
3	Secondary Summer School Credit Recovery	Provide opportunities for high school students who have failed one or more courses during the regular school year to make up credits. The failure rate of students who are low-income, English learners and students experiencing homelessness is at a higher rate than other student subgroups. Credit recovery opportunities helps students towards course completion which leads towards graduation.	$102,000.00	Yes
4	Elementary Wellness & Behavior Specialists (3 FTE)	Unduplicated students often experience chronic absenteeism and frequent tardiness. Research indicates that when students feel emotionally safe, they are more focused and perform better academically. Elementary principals have identified a need for staff who can respond effectively to collaborate with parents to address attendance issues. Staff will also coordinate with district student services for students who have behavioral concerns but do not qualify for SPED services. Elementary Wellness and Behavior Specialists will specialize in providing interventions when students have chronic absences, tardy absences, and/or significant behaviors. - Provide 3.0 FTE to serve all elementary schools and supplement the behavior interventionalist work at the site with coordinated effort through student services department. - Concentrate focus on supporting parents with attendance, getting students to school with their basic needs met. - A focus on addressing chronic absenteeism across the sites they serve.. The district will access the services from LACOE, and school sites will be given training and assistance from the Department of Student Services. - Staff to support the School Attendance Review Board (SARB) process to work directly with student services department to identify and provide interventions prior to a SARB Meeting with parents and school staff.	$335,532.06	Yes

5	Homeless/Foster/At-Risk Youth Specialist	Students experiencing homelessness and foster youth students need support accessing local and regional resources. Additionally, traditional methods of communication with families are often inaccessible to families in these circumstances. A need for a staff member who can act as an advocate on behalf of the student group and individual students has been identified based on the frequency with which these students' ability to access the academic program, as well as additional services and activities, is often overlooked or not addressed by traditional staffing. Transportation and access to local and regional services will be communicated directly with families, and individualized communication will be provided to Students and parents experiencing homelessness or who are placed in foster care. Students and families will be assisted by this staff to advocate for additional resources and considerations to be able to access the instructional programs, as well as other activities and programs.	$58,579.62	Yes
6	School Climate & Mental Health Surveys (Hanover)	BUSD surveys students, families, and staff annually to collect data on a variety of metrics that give us insight into the perspectives, perceptions, and experiences our students, families and staff have. We collect and analyze this data through an outside vendor to allow our participants to remain anonymous. Additionally, the results of these surveys help us measure growth in the metrics section of the LCAP.	$50,000.00	Yes
7	Partial SOAR Program Staffing (CDS) (1 teacher; 1 para; 2 specialists)	- The SOAR Program serves a large number of unduplicated students. Therefore, a smaller class size will ensure that students receive more individualized instruction to meet their needs and excel academically. - Low-income, English learners, and foster youth within this smaller will receive small group instruction more regularly, 1:1 instruction more regularly, more closely monitored academic progress, more intervention beginning with Tier II and then advancing to Tier III as needed - This will provide for 1.0 FTE additional teachers to serve the unduplicated students at the school. - It will also provide for a 2.0 FTE for SOAR Wellness & Behavior Specialists to serve the unduplicated students across the district. - It also provides 1.0 Campus Supervisor to assist with the SOAR student population on Monterey Campus.	$408,230.52	Yes

Goal

Goal #	Description	Type of Goal
3	Recruit and retain quality employees as measured by full employment of teaching staff with appropriate credentials and placed in appropriate assignments. (Human Resources) State of California Priorities: Priority One: Basic (Conditions of Learning) Priority Two: State Standards (Conditions of Learning) Priority Three: Parental Involvement (Engagement) Priority Four: Pupil Achievement (Pupil Outcomes) Priority Five: Pupil Engagement (Engagement) Priority Six: School Climate (Engagement) Priority Seven: Course Access (Conditions of Learning) Priority Eight: Other Pupil Outcomes (Pupil Outcomes)	Broad Goal

State priorities addressed by this goal.

1, 2, 3, 4, 5, 6, 7, 8

An explanation of why the LEA has developed this goal.

BUSD has traditionally met Williams compliance annually and will work towards maintaining that expectation. Fully credentialed teachers not only are required for compliance but also for the instructional program to meet the learning needs of students.

Metrics in this goal will help determine the progress made in creating an inclusive work environment that attracts high qualify candidates diverse backgrounds.

Measuring and Reporting Results

Metric #	Metric	Baseline	Year 1 Outcome	Year 2 Outcome	Target for Year 3 Outcome	Current Difference from Baseline

1	Survey data will indicate progress in positive relationships among staff, students, and families leading to more open communication, academic achievement, and positive student behavior will improve by 6 percentage points over 3 years.	In 2022-2023, School Satisfaction Survey analysis indicated the following: Teachers communicate with students about academic progress: Students - 60%; Parents - 78%; Staff - 84%; In 23-24, School Satisfaction Survey analysis indicated English Language Learner (Parent & Student) - 33% and Title I Schools (SED) 79%	In 2023-2024, School Satisfaction Survey analysis indicated the following: Teachers communicate with students about academic progress: Students - 55%; Parents - 78%; Staff - 93%;	In 2024-2025, School Satisfaction Survey analysis indicated the following: Teachers communicate with students about academic progress: Students - 57%; Parents - 77%; Staff - 85%;	Staff, students, and families sense of open communication, academic achievement, and positive student behavior will improve by 6 percentage points by year 3.	Survey data will indicate progress in positive relationships among staff, students, and families leading to more open communication, academic achievement, and positive student behavior changed as follows: Students decreased by 3%; Parents decreased by 1%; Staff increased by 1%
2	Survey results related to diversity, equity, and inclusion will improve by 6 percentage points over 3 years	In 2022-2023, School Satisfaction Survey analysis indicated the following: We treat each other with respect: Staff - 74%; Students - 78%; Parents - 86%; In 23-24, School Satisfaction Survey analysis indicated English Language Learner (Parent & Student) - 33% and Title I Schools (SED) 69%	In 2023-2024, School Satisfaction Survey analysis indicated the following: We treat each other with respect: Staff - 88%; Students - 64%; Parents - 78%;	In 2024-2025, School Satisfaction Survey analysis indicated the following: We treat each other with respect: Staff - 85%; Students - 79%; Parents - 80%;	Survey results related to diversity, equity, and inclusion will improve by 6 percentage points by year 3.	Survey results related to diversity, equity, and inclusion changed as follows: Staff increased by 11%; Students increased by 1%; Parents decreased by 6%

3	Employment of Certificated Personnel Administrators will meet the needs of the District and be in alignment with State certification requirements	In 2022–2023, this metric was met.	In 2023–2024, this metric was met	In 2024–2025, this metric was met	Employment of Certificated Personnel Administrators will meet the needs of the District and be in alignment with State certification requirements	2024-2025 Employment of Certificated Personnel Administrators was met.

Goal Analysis for 2025-2026

An analysis of how this goal was carried out in the previous year.

A description of overall implementation, including any substantive differences in planned actions and actual implementation of these actions, and any relevant challenges and successes experienced with implementation.

Overall Implementation & Successes The implementation of Goal 3 during the 2025–2026 school year focused on recruiting and retaining highly qualified employees while fostering a diverse, inclusive, and professionally supported workforce. Following the strategic adjustments made in the previous LCAP cycle the planned actions for 2025-2026 were implemented with a high degree of fidelity and success. Most notably the shift away from a centralized DEI Consultant toward a more sustainable, site-based leadership model contributed to the success of our DEI work as well as staff satisfaction.

A major success of this decentralized approach was the effective utilization of the Diversity, Equity, and Inclusion (DEI) Site Teacher Lead stipends (Action 3.1) and their dedicated collaboration time (Action 3.2). By relying on existing administrative staff and site-based teacher leaders rather than outside consultants, the District successfully embedded equity work more deeply into the daily fabric of school life. Participation in site-based equity initiatives remained robust. School Satisfaction Survey data indicates that this decentralized approach is positively influencing school culture; for example, the percentage of staff reporting that "we treat each other with respect" was 85% in the prior year, staff increased by 11%; Students increased by 1%; Parents decreased by 6% in 2025-2026.

Another cornerstone of success for Goal 3 was the District's continued compliance with state certification requirements for certificated personnel and administrators (Action 3.3). This metric, which ensures that all educators are appropriately credentialed and assigned, was fully met. Maintaining this standard is critical to ensuring high-quality instruction and reflects the District's ongoing, unwavering commitment to professional excellence.

Challenges and Substantive Differences Because the 2025–2026 actions were purposefully refined and scaled to match the District's capacity, there were no major substantive differences between the planned actions and actual implementation. The reduction in collaboration funding (Action 3.2) planned for 25-26 successfully balanced fiscal responsibility with the need for meaningful professional development without overextending limited resources.

However, systemic challenges persisted. The recruitment and retention of staff in specialized roles continues to be a hurdle. Similar to the challenges noted in Goals 1 and 2, statewide staffing shortages—especially in areas such as behavioral support and special education—required ongoing, intensive recruitment efforts. While this did not prevent the District from meeting its baseline certification requirements, it underscores the critical importance of not only offering competitive compensation but continuing to foster the supportive and inclusive work environments driven by our site-level DEI initiatives.

Specific Actions:

Action 3.1 – Diversity, Equity, and Inclusion (DEI) Site Teacher Lead Stipends (Note: Shifted from Action 3.2 in previous cycles)

Implementation: Fully implemented.

Targeted subgroups: English Learners, Low Income, Foster Youth.

Analysis: With the strategic removal of the centralized consultant role, these stipends successfully empowered site-based DEI leadership. Participation was strong, and empowering site leads allowed for equity initiatives to be tailored to specific campus needs, resulting in sustained positive perceptions of school climate and inclusion.

Action 3.2 – DEI Site Lead Collaboration Time (Note: Shifted from Action 3.3 in previous cycles)

Implementation: Fully implemented.

Targeted subgroups: English Learners, Low Income, Foster Youth.

Analysis: The refined budget successfully provided the necessary time for professional development and coordination among DEI leads. This action supported the District's shift toward efficiently embedding collaboration into existing structures.

Action 3.3 – Certificated Personnel and Administrative Costs at the District and Site Level (Note: Shifted from Action 3.4 in previous cycles)

Implementation: Fully implemented.

Targeted subgroups: All students (Not contributing to increased/improved services for unduplicated groups; Base funded).

Analysis: The District successfully met its goal of maintaining fully credentialed staff. 100% compliance with state certification requirements was achieved, securing high-quality instruction and workforce stability despite broader regional hiring challenges.

An explanation of material differences between Budgeted Expenditures and Estimated Actual Expenditures and/or Planned Percentages of Improved Services and Estimated Actual Percentages of Improved Services.

Summary: Overall, the district experienced a net underspending of approximately $2,611 for Goal 3 contributing initiatives. This minor variance was largely driven by highly accurate fiscal planning and efficient program execution following the structural shifts made in the previous year. The most notable (though slight) underspending occurred in Diversity, Equity, & Inclusion Site Lead Collaboration Time (Action 3.2), which came in just under budget due to the successful integration of collaboration into existing professional learning communities, reducing the need for additional paid hours. The Diversity, Equity, & Inclusion Site Teacher Lead Stipends (Action 3.1) were almost perfectly on budget, reflecting stable and full implementation.

Because the district had already refined this goal by removing ineffective actions (such as the centralized DEI consultant) in the previous cycle, the current expenditures closely match the budget. Despite the minor underspending, the district fully maintained its commitment to the core objectives of Goal 3: fostering a diverse, inclusive, and professionally supported workforce. The adjustments and execution reflect a responsive approach to evolving needs, balancing fiscal responsibility with the goal of sustaining and improving school climate and equitable outcomes for unduplicated students.

A description of the effectiveness or ineffectiveness of the specific actions to date in making progress toward the goal.

Summary: The evaluation of Goal 3—which focuses on recruiting and retaining highly qualified employees while fostering a positive, inclusive culture—demonstrates that the District's recent strategic recalibrations have been highly effective. During the 2025–2026 school year, Burbank Unified School District (BUSD) fully realized its shift away from centralized consulting toward an empowering, site-based leadership model. The outcomes of this implementation confirm that the actions taken to date are making meaningful progress toward the goal.

A central success of the 2025–2026 plan was the effective utilization of the Diversity, Equity, and Inclusion (DEI) Site Teacher Lead stipends (Action 3.1) and their associated Collaboration Time (Action 3.2). Having previously removed the centralized DEI Consultant role, the District relied on these site-based teacher leaders to advance equity-focused initiatives that were tailored to the specific needs of their individual campuses. This localized approach proved highly effective. Recent School Satisfaction Survey data indicates strong, sustained positive perceptions of school climate. For instance, staff agreement with the statement "we treat each other with respect" remained high at 85%. Furthermore, student agreement saw a dramatic increase (from a baseline of 64% to 79%), and parent agreement increased to 80%. This improvement strongly suggests that embedding site-based DEI leadership into the daily practices of our schools is having a profound, positive effect on school culture and relationships.

Another key metric for Goal 3 is the employment of fully credentialed teachers and administrators (Action 3.3). The District effectively met this target, maintaining compliance with state certification requirements. This success is significant, especially in a statewide context where many districts continue to struggle with post-pandemic staffing shortages and a reliance on intern or out-of-field teachers. Burbank Unified's ability to maintain a highly qualified workforce speaks to the strength and effectiveness of its base-funded recruitment and retention practices, even amid broader labor market challenges.

Despite these overarching successes, the District acknowledges that staffing specialized roles (such as special education and behavioral support) requires continuous effort. However, by right-sizing the collaboration funding to balance fiscal responsibility with meaningful professional development, BUSD has ensured that its equity and retention work is both impactful and sustainable.

In summary, the actions under Goal 3 during the 2025–2026 school year were highly effective. The strategic pivot to empower site-based DEI leadership (Actions 3.1 and 3.2) and the District's continued compliance with credentialing standards (Action 3.3) demonstrate meaningful progress. The adjustments made in the previous year reflect a commitment to refining strategies based on evidence, ensuring that the District continues to build a strong, inclusive, and professionally supported workforce for the 2026–2027 cycle and beyond.

Specific Actions:

Action 3.1 – Diversity, Equity, and Inclusion (DEI) Site Teacher Lead Stipends (Note: Shifted from Action 3.2 in previous cycles)

Effective

Targeted subgroups: English Learners, Low Income.

Analysis: With the strategic removal of the centralized consultant role, these stipends successfully empowered site-based DEI leadership. Participation was strong, and

empowering site leads allowed for equity initiatives to be tailored to specific campus needs, resulting in sustained positive perceptions of school climate and inclusion. This action successfully supported increased services, as validated by recent survey data showing agreement that "we treat each other with respect" among staff (85%), students (improving significantly to 79%), and parents (80%). English learners reported 89% agreement. Title I schools 86% compered to non-title one schools - 83% to represent low-income populations.

Action 3.2 – DEI Site Lead Collaboration Time (Note: Shifted from Action 3.3 in previous cycles)

Effective

Targeted subgroups: English Learners, Low Income, Foster Youth.

Analysis: The refined budget successfully provided the necessary time for professional development and coordination among DEI leads. This action supported the District's shift toward efficiently embedding collaboration into existing structures, contributing directly to the positive climate survey results across key subgroups (staff at 85%, students at 79%, and parents at 80% agreement on respectful treatment). English learners reported 89% agreement. Title I schools 86% compered to non-title one schools - 83% to represent low-income populations.

Action 3.3 – Certificated Personnel and Administrative Costs at the District and Site Level (Note: Shifted from Action 3.4 in previous cycles)

Effective

Targeted subgroups: All students (Not contributing to increased/improved services for unduplicated groups; Base funded).

Analysis: The District successfully met its goal of maintaining fully credentialed staff. Compliance with state certification requirements was achieved, securing high-quality instruction and workforce stability despite broader regional hiring challenges.

A description of any changes made to the planned goal, metrics, target outcomes, or actions for the coming year that resulted from reflections on prior practice.

Reflections on the highly successful implementation of Goal 3 during the 2025–2026 school year have led to a collective decision by the Burbank Unified School District (BUSD) and our educational partners to continue actions as is for the upcoming 2026–2027 Local Control and Accountability Plan (LCAP). Because the District executed significant, strategic adjustments to this goal in the previous cycle the focus for the coming year is to allow these refined strategies to fully mature. Therefore, no substantive changes are being made to the planned goal, metrics, target outcomes, or actions for the 2026–2027 cycle.

Maintaining Metrics and Target Outcomes: Another critical area of continuity is the District's unwavering commitment to maintaining a fully credentialed teaching and administrative staff (Action 3.3). This metric, which was successfully met in the previous cycles, remains a cornerstone of Goal 3. The District's ability to consistently meet this target, even amid ongoing statewide staffing shortages, is a testament to its effective, base-funded recruitment and retention strategies. For 2026–2027, this metric will continue to be rigorously monitored through the California Department of Education's Teacher Assignment Monitoring and Oversight (TAMO) report to ensure that all students have access to appropriately credentialed educators. The metric was updated for year 1 outcomes to reflect the appropriate year.
In summary, the 2026–2027 LCAP for Goal 3 reflects a commitment to stability and implementation fidelity. The strategic refinements made in the previous year—focusing on sustainable, site-embedded leadership (Actions 3.1 and 3.2) and maintaining high standards for teacher qualifications (Action 3.3)—have proven highly effective. By choosing to "stay the course" and invest in what works, Burbank Unified is reinforcing its long-term vision of building a strong, inclusive, and professionally supported workforce.

A report of the Total Estimated Actual Expenditures for last year's actions may be found in the Annual Update Table. A report of the Estimated Actual Percentages of Improved Services for last year's actions may be found in the Contributing Actions Annual Update Table.

Actions

Action #	Title	Description	Total Funds	Contributing
1	Diversity, Equity, & Inclusion Site Teacher Lead Stipends	As a continued extension and progression of the professional development, training, and support our campuses have received in diversity, equity, and inclusion (DEI) practices, a stipend will be given to select teachers on campus who will act as liaisons for students to receive support and voice issues or concerns regarding DEI. Teachers receiving the DEI stipend will collaborate with our DEI consultants and will assist in leading site discussions and professional development for the DEI initiative. Professional Development will focus on marginalized student groups found within the subgroups of English Learners and Socioeconomically Disadvantaged.	$100,755.60	Yes
2	Diversity, Equity, & Inclusion Site Lead Collaboration Time	As a continued extension and progression of the professional development, training, and support our campuses have received in diversity, equity, and inclusion (DEI) practices, collaboration time will be provided to select teachers on campus who will act as a liaisons for students to receive support and voice issues or concerns regarding DEI. Teachers will collaborate with our DEI consultants and will assist in leading site discussions and professional development for the DEI initiative. Professional Development will focus on marginalized student groups found within the subgroups of English Learners and Socioeconomically Disadvantaged.	$25,500.00	Yes
3	Certificated Personnel and Administrative Costs at the District and Site Level	Certificated Personnel and Administrative Costs at the District and Site Level to support the education of students Continue to recruit and retain highly qualified certificated staff via a more competitive salary - given competing budgetary needs and interests.	$116,732,680.00	No

Goal

Goal #	Description	Type of Goal
4	Efficient and effective operations as measured by appropriate facilities especially classrooms that are conducive to the needs of the instructional program. (Business Services) State of California Priorities: Priority One: Basic (Conditions of Learning) Priority Three: Parental Involvement (Engagement) Priority Six: School Climate (Engagement) Priority Eight: Other Pupil Outcomes (Pupil Outcomes)	Broad Goal

State priorities addressed by this goal.

1, 3, 6, 8

An explanation of why the LEA has developed this goal.

BUSD prides itself in having facilities especially classrooms, playgrounds, libraries, cafeterias, and other instructional areas that meet the needs of the instructional program. It is the expectation that this practice continues.

A single metric will determine if processes being followed to identify and address any concerns with the status of our school and district infrastructure including grounds and buildings.

Measuring and Reporting Results

Metric #	Metric	Baseline	Year 1 Outcome	Year 2 Outcome	Target for Year 3 Outcome	Current Difference from Baseline
1	100% Compliance with the Facilities Inspection Tool (FIT)	100% compliance with the completion of the Facilities Inspection Tool (FIT) in 2022-2023	100% compliance with the completion of the Facilities Inspection Tool (FIT) in 2023-2024	100% compliance with the completion of the Facilities Inspection Tool (FIT) in 2024-2025	100% compliance with the completion of the Facilities Inspection Tool (FIT)	100% Compliance with the Facilities Inspection Tool (FIT)

Goal Analysis for 2025-2026

An analysis of how this goal was carried out in the previous year.

A description of overall implementation, including any substantive differences in planned actions and actual implementation of these actions, and any relevant challenges and successes experienced with implementation.

Overall Implementation & Successes
During the 2025–2026 school year, the implementation of Goal 4—which ensures that all school facilities are maintained in good repair and provide safe, functional learning environments—was highly successful. The District achieved full implementation of its planned maintenance and operations action (Action 4.1).

Ongoing base funding effectively supported the daily maintenance and operation of all schools and district sites. Furthermore, the District successfully utilized specific bond and insurance funds to support necessary new construction and address major infrastructural repairs without detracting from the general maintenance budget. A key measurable success of this implementation was the District's ability to achieve and maintain 100% compliance with the Facilities Inspection Tool (FIT) across all campuses, ensuring that students and staff had access to safe, clean, and well-maintained educational spaces.

Challenges and Substantive Differences
Because the District prioritized basic operational services, there were no substantive differences between the planned actions and the actual implementation; Action 4.1 was fully implemented as intended.

However, the District did navigate relevant operational challenges during the 2025–2026 school year. Extreme weather occurrences, including heavy winds, highlighted ongoing vulnerabilities and created immediate needs for roofing and facility improvements. This required the maintenance and operations teams to swiftly pivot resources to address urgent repairs.

Additionally, consistent staffing within the facilities and maintenance departments remained a persistent challenge. The District faced continuous vacancies and navigated a limited pool of highly qualified candidates for specialized trades and custodial roles. To mitigate this challenge and ensure no lapse in service quality, the Facilities Department collaborated closely with Human Resources to actively recruit and fill positions, strategically utilizing both long-term hires and daily substitutes to maintain operational standards across all sites.

Specific Actions:

Action 4.1 – Maintenance and Operations of Facilities

Implementation: Fully implemented.

Targeted subgroups: All students (Not contributing to increased/improved services for unduplicated groups; Base funded).

Analysis: The District successfully provided for the basic operational and maintenance services of all school sites. Despite the challenges posed by extreme weather occurrences and an ongoing shortage of classified facility staff, strategic collaboration with HR and the use of substitute personnel ensured continuous, safe operations and a 100% compliance rate on the state Facilities Inspection Tool (FIT).

An explanation of material differences between Budgeted Expenditures and Estimated Actual Expenditures and/or Planned Percentages of Improved Services and Estimated Actual Percentages of Improved Services.

All Goal 4 action item one was fully funded with no supplemental funds or variations in the general fund budgeted amount compared to actual expenditures, as this goal is funded through base grant funds or grant and bond monies, with no material difference in maintenance costs.

A description of the effectiveness or ineffectiveness of the specific actions to date in making progress toward the goal.

A description of the effectiveness or ineffectiveness of the specific actions to date in making progress toward the goal.

Summary:
The evaluation of Goal 4—which ensures that all school facilities are maintained in good repair and provide safe, functional learning environments—demonstrates that the District's maintenance and operations efforts were highly effective during the 2025–2026 school year.

District Facilities Inspection Tool (FIT) reports were all completed promptly, and any facility findings (including immediate needs generated by extreme weather and high winds) were addressed rapidly by the maintenance teams. As a result, the District remains in excellent standing with all state reporting regarding the conditions of our campuses. Despite the ongoing classified staffing challenges noted previously, day-to-day operations and cleaning schedules were successfully maintained without interruption throughout the 2025–2026 school year through strategic collaboration with Human Resources.

Overall, the District's base-funded facility operations (Action 4.1) successfully met its target, achieving a 100% compliance rate on the state Facilities Inspection Tool (FIT). Because it directly resulted in safe, well-maintained campuses for all students and staff, this action is determined to be highly effective in making progress toward the goal.

Specific Actions:

Action 4.1 – Maintenance and Operations of Facilities

Effective (Metric 4.1: 100% Compliance with the Facilities Inspection Tool (FIT))

Analysis: Base-funded maintenance and operations successfully ensured that all campuses remained safe, clean, and fully functional. The District achieved 100% compliance on state facility inspections, successfully overcoming regional staffing shortages and acute weather challenges to provide an optimal physical environment for student learning.

A description of any changes made to the planned goal, metrics, target outcomes, or actions for the coming year that resulted from reflections on prior practice.

Reflections on the successful implementation of Goal 4 during the 2025–2026 school year indicate that the District's current approach to maintenance and operations is highly effective. As a result, Burbank Unified School District (BUSD) and its educational partners have determined that no changes will be made to the planned goal, metrics, target outcomes, or actions for the upcoming 2026–2027 LCAP.
Because the District successfully maintained 100% compliance on the state Facilities Inspection Tool (FIT)—even while navigating acute weather challenges and regional classified staffing shortages—the focus for the coming year is to simply maintain this high standard of operational excellence. The District will "stay the course" with its base-funded facilities maintenance (Action 4.1).
There have been no changes to the goals, metrics, target outcomes, or actions.

A report of the Total Estimated Actual Expenditures for last year's actions may be found in the Annual Update Table. A report of the Estimated Actual Percentages of Improved Services for last year's actions may be found in the Contributing Actions Annual Update Table.

Actions

Action #	Title	Description	Total Funds	Contributing
1	Provide Facility and Maintenance Operations staff, including custodians to provide a clean, safe, and secure learning environment for all students.	Provide Facility and Support Operations (FASO) staff, including custodians to provide a clean, safe, and secure learning. This action supports the education of students by having safe and secure facilities.	$7,395,358.00	No

Increased or Improved Services for Foster Youth, English Learners, and Low-Income Students for 2026-2027

Total Projected LCFF Supplemental and/or Concentration Grants	Projected Additional 15 percent LCFF Concentration Grant
$12,617,495.00	

Required Percentage to Increase or Improve Services for the LCAP Year

Projected Percentage to Increase or Improve Services for the Coming School Year	LCFF Carryover — Percentage	LCFF Carryover — Dollar	Total Percentage to Increase or Improve Services for the Coming School Year
7.16%	0.00%	$0.00	7.16%

The Budgeted Expenditures for Actions identified as Contributing may be found in the Contributing Actions Table.

Required Descriptions

LEA-wide and Schoolwide Actions

For each action being provided to an entire LEA or school, provide an explanation of (1) the unique identified need(s) of the unduplicated student group(s) for whom the action is principally directed, (2) how the action is designed to address the identified need(s) and why it is being provided on an LEA or schoolwide basis, and (3) the metric(s) used to measure the effectiveness of the action in improving outcomes for the unduplicated student group(s).

Goal and Action #(s)	Identified Need(s)	How the Action(s) Address Need(s) and Why it is Provided on an LEA-wide or Schoolwide Basis	Metric(s) to Monitor Effectiveness
Goal 1, Action 1 Elementary Class Size Reduction Grades 4 and 5	Unduplicated pupils' academic achievement in mathematics and literacy, and acquisition of English for EL students. This action is a schoolwide action due to the high unduplicated student counts as well as Dual Immersion program at Disney (43% unduplicated pupils) & McKineley (38% unduplicated pupils) Elementary schools. The action being developed is based on the needs of English learners and socioeconomically disadvantaged students (low-income students). The following data set provides the reader with additional data for comparative purposes. Disney ELA SBAC data indicates the following need to raise the percentage of students who meet or exceed the standard from the following 2022-23 baseline: All (68.04%); ELs (16.67%); SEDs (55.00%). Disney Math SBAC data indicates the following need to raise the percentage of students who meet or exceed the standard from the following 2022-23 baseline: All (50.00%); ELs (7.70%); SEDs (36.91%). McKinley ELA SBAC data indicates the following need to raise the percentage of students who meet or exceed the standard from the following 202-23 baseline: All (45.46%); ELs (0.0%); SEDs (31.33%). McKinley Math SBAC data indicates the following need to raise the percentage of students who meet or exceed the standard from the following 2022-23 baseline: All (37.05%); ELs (11.11%); SEDs (19.27%).	This action meets the needs of our UDP population, as smaller class sizes will allow the teacher and instructional assistants to work with students in small groups and in a 1:1 setting, resulting in increased student achievement. This is the most effective use of funds as research shows that a smaller class size, coupled with effective teaching practices, results in greater student achievement. Teachers and instructional assistants provide students with small group and 1:1 instruction that will towards student academic success. The makeup of classrooms is approximately 40% of students who are English learners, low-income students, and students experiencing homelessness, where small groups and individualized instruction can be specifically utilized. This action is school-wide wide though it is principally directed to support smaller classes in upper elementary for UDP students, which will allow for more focused time for small group instruction to support the math and literacy achievement of all students. Smaller class sizes benefit all students as teachers are able to provide more small-group and 1:1 instruction in a smaller class setting, resulting in improved student performance. This is to ensure students are on grade level academically before entering middle school.	(Metrics 1.1–1.16; 1.20-1.26: CAASPP ELA & Math; Graduation)

Goal 1, Action 4 Dual Immersion Teacher Cost Share	The action being developed is based on the needs of English learners and socioeconomically disadvantaged students (low-income students). The following data set provides the reader with additional data for comparative purposes. Unduplicated pupils' academic achievement in mathematics and literacy, and acquisition of English for EL students. Disney ELA SBAC data indicates the following need to raise the percentage of students who meet or exceed the standard from the following 2022-23 baseline: All (68.04%); ELs (16.67%); SEDs (55.00%). Disney Math SBAC data indicates the following need to raise the percentage of students who meet or exceed the standard from the following 2022-23 baseline: All (50.00%); ELs (7.70%); SEDs (36.91%). McKinley ELA SBAC data indicates the following need to raise the percentage of students who meet or exceed the standard from the following 202-23 baseline: All (45.46%); ELs (0.0%); SEDs (31.33%). McKinley Math SBAC data indicates the following need to raise the percentage of students who meet or exceed the standard from the following 2022-23 baseline: All (37.05%); ELs (11.11%); SEDs (19.27%). 4th and 5th Grade Class Size Reduction for Targeted Subgroups - Disney Elementary and McKinley Elementary (Title I Schools)	This action meets the needs of our UDP population, as it will reduce class size so that there are 5 to 7 fewer students per class to provide additional support to ELD and low-income students. Research shows that smaller class size coupled with effective teaching practices results in greater students achievement. The makeup of classrooms is primarily of unduplicated students with a concentration of students who are English learners and low-income. Teachers and instructional assistants provide students with small group and 1:1 instruction that will towards student academic success. This Action is school-wide though it is principally directed to support English language acquisition for English learners, in elementary. Dual-Immersion language classrooms allow mutually beneficial classroom environments for Spanish speaking families and English Speaking families to learn grade level curriculum while obtaining a second language. Therefor this action is school-wide as it benefits all students. Re-enforcement of the child's home language will also occur as a result. This will ensure students are at grade level academically before entering middle school and reduce the risk of ELs becoming LTELs.	(Metrics 1.1–1.16; 1.20-1.26: CAASPP ELA & Math; Graduation)

Goal 1, Action 5 Dual Immersion Instructional Assistants	The action being developed is based on the needs of English learners and socioeconomically disadvantaged students (low-income students). The following data set provides the reader with additional data for comparative purposes. Unduplicated pupils' academic achievement in mathematics and literacy, and acquisition of English for EL students. Disney ELA SBAC data indicates the following need to raise the percentage of students who meet or exceed the standard from the following 2022-23 baseline: All (68.04%); ELs (16.67%); SEDs (55.00%). Disney Math SBAC data indicates the following need to raise the percentage of students who meet or exceed the standard from the following 2022-23 baseline: All (50.00%); ELs (7.70%); SEDs (36.91%). McKinley ELA SBAC data indicates the following need to raise the percentage of students who meet or exceed the standard from the following 202-23 baseline: All (45.46%); ELs (0.0%); SEDs (31.33%). McKinley Math SBAC data indicates the following need to raise the percentage of students who meet or exceed the standard from the following 2022-23 baseline: All (37.05%); ELs (11.11%); SEDs (19.27%).	This action meets the needs of our UDP population, as it will reduce class size so that there are 5 to 7 fewer students per class to provide additional support to ELD and low-income students. This is the most effective use of funds as research shows that smaller class sizes, combined with effective teaching practices, lead to greater student achievement. In classrooms primarily composed of unduplicated students, educators apply principles from social learning theory and culturally responsive teaching by providing small group and 1:1 instruction tailored to students' backgrounds and needs. These approaches foster engagement, build academic confidence, and support equitable learning outcomes. This Action is school-wide though it is principally directed to support English language acquisition for English learners, in elementary. Dual-Immersion language classrooms allow mutually beneficial classroom environments for Spanish speaking families and English Speaking families to learn grade level curriculum while obtaining a second language. Therefor this action is school-wide as it benefits all students. Re-enforcement of the child's home language will also occur as a result. This will ensure students are at grade level academically before entering middle school and reduce the risk of ELs becoming LTELs.	(Metrics 1.1–1.16; 1.20-1.26: CAASPP ELA & Math; Graduation)

Goal 1, Action 7 Interpreters for Second Language Learner Parents	English Learner pupils' and families need school and district information in a variety of languages. Access to the same educational opportunities require the use of translators and interpreters so families with a home language other than English have the same access to information to make educational decisions for their children. These services are provided across all districtwide communications as well as available to sites that request support for translation of school-to-home materials. Interpreters (written and spoken) for Second Language Students, Parents, and Family Members - Continue to recruit and hire more classified staff who can provide interpretation services at all sites that have an English Learner Advisory Committee (ELAC), as well as to any District families who require translation	This action meets the needs of our ELL population, as it will assist in translating documents for parents of English Language Learners who need additional support to access school meetings, materials, and correspondence. This action is the most effective use of funds to meet the needs of ELL populations at all sites, as English Learner families are elevated within the unduplicated student populations, and parent engagement is a research-based contributor to student success. This action is LEA-wide to support families that speak a language other than English in their household across the entire district. All students will benefit from this action as many families have parents and/or contacts that speak a language other than English, regardless of their students' English language acquisition.	Metrics 1.2, 1.10, 1.17, 1.18, & 1.33 (English Learner CAASPP ELA & MATH and family engagement)
Goal 1, Action 8 Induction Professional Development Teacher on Special Assignment	Unduplicated pupils' academic achievement in mathematics and literacy, and acquisition of English for EL students. New hires and teaching staff need support for entering into the workforce as well as a mechanism to finish their credentialing to be full-time, highly qualified, permanent teachers. Often times vacancies and new hires are positions that work with our most vulnerable populations, including English Learners, and students experiencing homelessness.	This action meets the needs of our UDP population, as the teacher on Special Assignment will provide professional development services to induction teachers, focusing on the teaching and learning needs of unduplicated students. Attention will be given to the mastery of standards, engagement practices, monitoring, intervention services, assessments, and parent communication. The goal is twofold: to raise the level of instructional services provided by the teacher, with the additional benefit that students receive from better instructional practices that are consistently administered. This action is the most effective use of funds to meet the instructional goals for the unduplicated populations at all sites, as professional development and training are essential to providing the services that increase access and performance for unduplicated students. It is aligned with having highly effective teachers in classrooms who have received new teacher training and professional development. This action is LEA wide though it is principally directed to support Unduplicated students who are commonly assigned new teachers in the profession or our least senior teaching staff. This action will benefit all students as providing Professional Development on the teaching standards and induction for new teachers allows for sustainability and increased performance for our students and classrooms comprised primarily of Unduplicated students.	(Metrics 1.1–1.16; 1.20-1.26: CAASPP ELA & Math; Graduation)

Goal 1, Action 9 Professional Development Day Costs for All Teachers (1 1/2 days)	Unduplicated pupils' academic achievement in mathematics and literacy, and acquisition of English for EL students. The action being developed is based on the needs of English learners, socioeconomically disadvantaged students (low-income students), and students experiencing homelessness in the entire district. Professional Development will be identified based on the needs of the district to support these populations. It will then be planned and delivered to all instructional staff to improve academic performance for unduplicated students across the entire school district. The following data set provides the reader with additional data for comparative purposes. ELA SBAC data indicate the following need to raise the percentage of students who meet or exceed the standard from the following 2022-23 baseline: All (58.43%); ELs (13.41%); SEDs (47.15%); Homeless (42.86%) Math SBAC data indicates the following need to raise the percentage of students who meet or exceed the standard from the following 2022-23 baseline: All (44.40%); ELs (15.14%); SEDs (32.74%); Homeless (28.58%) 22-23 ELPAC making progress rate is 57.7%. 2022-23 reclassification rate is 20.7%	This action meets the needs of our UDP population, asit is principally directed to support unduplicated student populations, which will allow for more focused time with ELs at risk of becoming LTELs, and in small group instruction to support the math and literacy achievement of our unduplicated students. This is to ensure students are on grade level academically before entering middle school. The training will focus on dimensions of diversity, equity, and inclusion as they impact the teaching and learning of students who are low-income, experiencing homelessness, and English learners. Specific curricular supplemental resources, instructional strategies, monitoring systems, interventions, and outcomes will be components of the training. The goal of the training is to raise teaching and learning so that unduplicated students benefit from the work of the instructional staff in getting students more successful in their academic career while also attending to social-emotional learning. The focus of professional development is on the delivery of instruction and research-based strategies to differentiate instruction for unduplicated student groups. English learners and low-income students will benefit from the focus on their instructional needs and the subsequent delivery of lessons by teachers. This action is LEA-wide as it will improve services for all students throughout the district, regardless of school site, grade, or instructional program, as teachers learn and grow in their profession to meet the current needs of students.	(Metrics 1.1–1.16; 1.20-1.26: CAASPP ELA & Math; Graduation)

Goal 1, Action 10 Elementary Response to Intervention for Reading/Language Arts and Math	Unduplicated pupils' academic achievement in mathematics and literacy, and acquisition of English for EL students. The action being developed is based on the needs of English learners and socioeconomically disadvantaged students (low-income students). The following data set provides the reader with additional data for comparative purposes. ELA SBAC data indicate the following need to raise the percentage of students who meet or exceed the standard from the following 2022-23 baseline: All (58.43%); ELs (13.41%); SEDs (47.15%); Homeless (42.86%) Math SBAC data indicates the following need to raise the percentage of students who meet or exceed the standard from the following 2022-23 baseline: All (44.40%); ELs (15.14%); SEDs (32.74%); Homeless (28.58%) 22-23 ELPAC making progress rate is 57.7%. 2022-23 reclassification rate is 20.7% The data indicate that the needs of English learners and low-income students are significant.	This action is designed to meet the academic needs of UDP population who fall below grade level, as Intervention teachers and instructional assistants will: - Provide direct intervention to students at skill level provided by certificated classroom and intervention teachers using research-based materials - Utilize full-time curriculum specialists (at elementary) to provide direct support to students and manage the program - Utilize part-time intervention teachers and instructional assistants to provide direct support to students - Provide direct intervention for underperforming students by certificated classroom and intervention teachers and instructional assistants - Utilize full-time curriculum specialists (at elementary) to provide direct support to students and manage the program - Utilize part-time intervention teachers and instructional assistants to provide direct support to students - When english or math intervention classes cannot be secured because of staffing, the budget funds can be used for aide support or supplemental materials. The outcome is to have students master State standards through the delivery of instruction that has high engagement practices, monitoring, assessments, and parent communication. This action is the most effective use of funds to meet the instructional goals for the unduplicated populations at these sites, as unduplicated students have increased knowledge gaps and performance compared to their peers. RTI is particularly effective in helping students stay at grade level and avoid the need for special education services. This action is LEA-wide as it will improve services for all students below grade level throughout the district to receive needed support through small group instruction, regardless of school site, grade, or instructional program.	(Metrics 1.1–1.16; 1.20-1.26: CAASPP ELA & Math; Graduation)

Goal 1, Action 11 Middle School School Psychologist (2.0 FTEs)	Unduplicated pupils' access to academics in mathematics and literacy, and acquisition of English for EL students. Approximately 40% of middle school students qualify for free/reduced lunch and about 20% of these same students experience a high rate of D/F grades. Additionally, about 10% of students in middle schools are English learners. These two psychologist positions serve all unduplicated populations.	This action meets the needs of our UDP population, as these two psychologist positions serve all unduplicated populations. They assess students, work with teachers to support the learning needs of students, provide professional development, consult with parents, and assist administrators. The work of the psychologists will help to lower the D/F rates of middle school students, increase attendance and increase test scores. The impact on English learners will be to maintain and increase performance on their daily work and the ELPAC. This action is the most effective use of funds to meet the instructional goals for the unduplicated populations at these sites, as experience has demonstrated that they have significant populations of students who don't have access to psychological services outside of school within their unduplicated student populations. This action is LEA-wide as it will allow access to students throughout the district, who have outside factors or basic needs that need to be met to engage in school and succeed academically. Services will include access to mental health services, behavioral interventions, and identification of disabilities or other factors impeding academic success.	Metrics 1.20-1.28 (Graduation Rates)

Goal 1, Action 12 Behavior Specialists	Unduplicated pupils' access to academics in mathematics and literacy, and acquisition of English for EL students. Behavior Specialists at schools will work with low-income, students experiencing homelessness, and English learners. These Behavior Specialists will be working exclusively with the schools with high populations of targeted student subgroups. Anecdotal data indicates a rise in the number of students who have increasing behavior and academic needs. At the elementary level especially, the number of students requiring greater assistance has dramatically increased over the past three years going from one/two students in severe need to over 20 students across the district. Students are displaying major meltdowns and become physical to their peers and adults. Their parents are in crisis mode as they also want to work with their children and school staff. This service provided through the school system is critically important to the identified subgoups as they often time struggle to arrange these services from the home or outside of school.	This action meets the needs of our UDP population, as behavior specialists work with teachers, instructional staff, DTTs, administrators, and parents. Behavior specialists participate in student study teams, 504s, and Special Education. Supporting low-income and English learners will result in increased access to instruction, more focused students, greater attendance, and increased achievement as measured by SBAC data and attendance. This action is the most effective use of funds to meet the instructional goals for the unduplicated populations at all sites, as they have significant behaviors within the unduplicated student populations across the district. Behavior Specialists specialize in working with staff to avoid these behaviors as opposed to responding to them. They add value to our other services directed towards the unduplicated population. This action is LEA-wide to support all students who have behavioral needs that impede their ability to succeed academically. This is being implemented LEA-Wide as these supports are needed across all grade levels and sites to provide behavioral interventions, monitoring, and strategies to preclude behavioral outbursts.	Goal 1 Metric 42 (Expulsions)

Goal 1, Action 14 Full Time Curriculum Specialists for all elementary schools	Unduplicated pupils' academic achievement in mathematics and literacy, and acquisition of English for EL students. The action being developed is based on the needs of English learners and socioeconomically disadvantaged students (low-income students). The following data set provides the reader with additional data for comparative purposes. ELA SBAC data indicates the following need to raise the percentage of students who meet or exceed the standard from the following 2022-23 baseline: All (58.43%); ELs (13.41%); SEDs (47.15%); Homeless (42.86%) Math SBAC data indicates the following need to raise the percentage of students who meet or exceed the standard from the following 2022-23 baseline: All (44.40%); ELs (15.14%); SEDs (32.74%); Homeless (28.58%)	This action meets the needs of our UDP population, as the Curriculum Specialists for all elementary schools will increase or improve services through the following duties and tasks: Manage site assessments (including ELPAC) Manage and supervise site RTI program to support underperforming students Organize and conduct professional development Analyze data and review with staff Demonstrate lessons Provide direct intervention services to underperforming students in targeted subgroups, including low-income students, English learners, and students experiencing homelessness This action represents the most effective use of funds to meet instructional goals for unduplicated student populations, as site and district leadership have observed that teachers respond more positively to peer-led support than to guidance from administration or external entities. Grounded in social learning theory, this approach recognizes that educators, like students, learn best through collaboration, modeling, and shared practice within trusted communities. By fostering peer-driven professional development, schools promote sustainable instructional improvement and equity-focused outcomes. This action is school-wide as it benefits all students to receive rigorous instruction at grade level. It is principally directed to support small-group instruction, standards implementation, SDAIE strategies, and in-class interventions with elementary teachers. This is to ensure students are on grade level academically before entering middle school. Curriculum Specialists support teachers in providing interventions, planning around assessment data, and best instructional practices for providing unduplicated students with access to grade-level curriculum. Curriculum specialists standardize instructional practices across classrooms and schools, ensuring that all students, regardless of background, receive access to high-quality learning experiences. They also help align curriculum with state standards and district goals, promoting coherence and equity.	(Metrics 1.1–1.16; 1.20-1.26: CAASPP ELA & Math; Graduation)

Goal 1, Action 15 Library Coordinators at Elementary Schools	Unduplicated pupils' access to a variety of literature for use at home and at school. The LCAP Committee continues to identify a need to provide unduplicated students access to libraries and technology computer labs during the school day to support student learning and therefore recommends that this remain an action for the 2023-24 LCAP. Access to primary language materials, software programs, and guided supplemental instructional lessons provided students with access to relevant and meaningful learning experiences to encourage and advance learning across all content areas. Library aides and multimedia technology specialists provide improved or increased services principally directed toward unduplicated students with 21st-century learning styles, specifically for students who may not have access to these services at home or in the community. This is an ongoing action from the 2017-2020 LCAP. Student achievement data shows that English learners, and students experiencing homelessness perform well in elementary schools, and the reclassification rates are relatively high and stable. Unduplicated student groups will be better equipped in English Language Arts as measured by District assessments.	This action meets the needs of our UDP population, as Library Coordinators will provide focused services to English Learners, socioeconomically disadvantaged students, and students experiencing homelessness through the services that they provide. Services include a concentration on literacy-based skills phonics, word recognition, comprehension, and other age-appropriate literacy standards. Stock and weed collections Manage information systems Manage school-wide Accelerated Reader Program Provide direct services to classes and targeted subgroup students Provide after school access to the library for targeted subgroup students Research consistently shows that certified school librarians and well-supported library programs are strongly correlated with improved student outcomes. In schools with full-time librarians, students score higher on standardized reading and writing tests, and these benefits are especially pronounced among at-risk populations, including low-income students, students of color, and students with disabilitie This action is LEA-wide as it will benefit all students to have access to books and have books read to them, though it is principally directed to Unduplicated students who may not have families at home to provide guidance for books or to read to them in English because of language barriers or time constraints with working long hours or two jobs.	Metrics 1.1-1.8 (CAASPP ELA)

Goal 1, Action 16 Targeted support for Twice Exceptional students who qualify as GATE and are UDP	Unduplicated pupils' academic achievement in mathematics and literacy, and acquisition of English for EL students for students identified as twice exceptional (GATE & UDP). These students have demonstrated additional need for teacher training and Professional Development so that the appropriate learning environment can be created to meet their learning needs.	This action will meet the needs of UDP students as it is an increased service to these unduplicated student groups, as they benefit from participating in the GATE program and are challenged by the activities implemented through the program. Research shows that students from families facing challenges such as poverty, homelessness, or learning English are often underrepresented in Gifted and Talented Education (GATE). This action supports equitable identification UDP students by applying principles from culturally responsive teaching, which emphasize recognizing and nurturing diverse forms of intelligence and potential. By addressing systemic barriers, schools ensure that students' academic strengths are not overlooked due to external circumstances. This action is LEA-wide as it will benefit all students; it is being implemented across K-8 schools to ensure equitable access to services by utilizing best practices for the identification and support of GATE students, such as universal screening tools for identification and Universal Design for Learning for multi-modal instruction.	Metrics 1.8 & 1.16 (CAASPP ELA & MATH)

Goal 1, Action 17 Elementary Assistant Principals (Miller & Jefferson 2 FTE)	Unduplicated pupils' academic achievement in mathematics and literacy, and acquisition of English for EL students. Additionally, the a need to support and address behavioral challenges in our unduplicated population that result in increased suspensions, attendance concerns, and impede academic access for this population of students.	The Assistant Principals for these two elementary schools will meet the needs of our UDP population by increasing or improving services through the following duties and tasks: Manage site assessments (including ELPAC) Manage and supervise all teachers in addition to site RTI program to support underperforming students Organize and conduct professional development Analyze data and review with staff Demonstrate lessons Provide administrative services to underperforming students in targeted subgroups, including low-income students, English learners, and students experiencing homelessness APs often manage critical aspects of school life, including: - Discipline and behavior systems - Scheduling and staffing - Facilities and safety - Family and community engagement 2 Their work ensures that schools run smoothly and that principals can focus on strategic leadership. When APs are supported and empowered, they help create positive, inclusive, and high-functioning school environments. This is the most effective use of funds as Assistant Principals are more effective than curriculum specialists and auxiliary staff, as they were found insufficient to meet the needs of a large-population elementary school. Drawing from systems theory and organizational learning, this decision reflects an understanding that sustainable change occurs when solutions are tailored to the unique dynamics and capacity of the school environment. Investing in site-specific strategies ensures resources directly support instructional goals and student outcomes. This action is school-wide and is being implemented at our two largest elementary schools to ensure equitable access to services, recognizing that these two schools share comparable instructional needs in supporting a larger general population and subsequent large unduplicated student population.	(Metrics 1.1–1.16; 1.20-1.26: CAASPP ELA & Math; Graduation)

Goal 1, Action 20 Culturally Responsive Pedagogy PD (K-12 PLCs in ELA & Math)	Unduplicated pupils' academic achievement in mathematics and literacy, and acquisition of English for EL students. The action being developed is based on the needs of English learners and socioeconomically disadvantaged students (low-income students). The following data set provides the reader with additional data for comparative purposes. ELA SBAC data indicates the following need to raise the percentage of students who meet or exceed the standard from the following 2022-23 baseline: All (58.43%); ELs (13.41%); SEDs (47.15%); Homeless (42.86%) Math SBAC data indicates the following need to raise the percentage of students who meet or exceed the standard from the following 2022-23 baseline: All (44.40%); ELs (15.14%); SEDs (32.74%); Homeless (28.58%) 22-23 ELPAC making progress rate is 57.7%. 2022-23 reclassification rate is 20.7% The data indicate that the needs of English learners and low-income students are significant.	Culturally Responsive Pedagogy PD will create time and space for teachers to work in professional learning communities with identified lead teachers, site administration, and district administration. Collaboration will be focused on instructional practices, including our district's work in diversity, equity, and inclusion, as well as the following: - Equity in grading - Best practices in culturally relevant instruction - Research interventions - The DuFour's essential questions for professional learning communities - Local data from formative assessments and district benchmarks - Plan-Do-Study-Act Cycles Culturally responsive pedagogy is a student-centered approach that integrates students' cultural backgrounds into all aspects of learning. Research shows that when students see their identities reflected in the curriculum and pedagogy, they are more engaged, motivated, and successful 1. CRP helps bridge the cultural disconnect that often exists between teachers and students, especially in diverse and low-income school settings. This is the most effective use of funds to meet the needs of our unduplicated pupil (UDP) population, as we are utilizing research-based collaboration protocols such as Professional Learning Communities, Plan-Do-Study-Act Cycles, and Instructional Rounds to improve instruction. Grounded in culturally responsive pedagogy and adult learning theory, these collaborative models empower educators to reflect on practice, share strategies that honor students' diverse backgrounds, and adapt instruction to better meet the academic and cultural needs of all learners. This action is LEA wide as it will benefit all students, though it is principally directed to support improved implementation of standards and good first instruction, which will allow for more focused lessons, instructional practices, and equity in grading for ELs at risk of becoming LTELs, and instruction to support the math and literacy achievement of our unduplicated students. This is to ensure students are on grade level academically before entering middle school.This action is being implemented across all schools to ensure equitable access to academic programming.	Metrics 1-16 (CAASPP ELA & MATH), 20-29 (Graduation Rates), & 34-39 (HS Dashboard Indicators)

Goal 1, Action 21 RTI Assessment Programs (i-Ready Assessment & School City)	Unduplicated pupils' academic achievement in mathematics and literacy, and acquisition of English for EL students. The action being developed is based on the needs of English learners and socioeconomically disadvantaged students (low-income students). The following data set provides the reader with additional data for comparative purposes. ELA SBAC data indicates the following need to raise the percentage of students who meet or exceed the standard from the following 2022-23 baseline: All (58.43%); ELs (13.41%); SEDs (47.15%); Homeless (42.86%) Math SBAC data indicates the following need to raise the percentage of students who meet or exceed the standard from the following 2022-23 baseline: All (44.40%); ELs (15.14%); SEDs (32.74%); Homeless (28.58%) 22-23 ELPAC making progress rate is 57.7%. 2022-23 reclassification rate is 20.7% The data indicate that the needs of English learners and low-income students are significant.	RTI Assessment Programs will provide students, staff, and families with performance data to make data-driven decisions regarding interventions for individual, small-group, and whole-group instructional practices. Data will be used to guide professional learning community work in course-alike cohorts as well as grade-level cohorts. Local data is essential in meeting the local indicators on the CA Dashboard. These local assessments will help measure the successful implementation of California State Standards. This action is the most effective use of funds to meet the instructional goals for unduplicated populations across all sites, as there is a significant need for timely, actionable data to guide instructional supports. Research-based practices emphasize the importance of formative assessment and data-driven decision-making in improving student outcomes, particularly for historically underserved groups. Other alternatives were considered but did not provide the real-time, formative data necessary to drive immediate and impactful changes in instructional practice. This action is LEA wide though as it will benifit all students even though it is principally directed to provide formative performance data for unduplicated populations, which will allow for more focused work with ELs at risk of becoming LTELs, and groupings or identification of Unduplicated students needing small group instruction to support the math and literacy achievement of our unduplicated students. This is to ensure students are on grade level academically before entering the next grade level. This action is being implemented across all schools to ensure equitable access to assessment data, recognizing that each school shares comparable instructional and data needs to support their unduplicated student populations by making informed decisions and planning based on comparable and relevant data.	Metrics 1-16 (CAASPP ELA & MATH), 20-29 (Graduation Rates), & 34-39 (HS Dashboard Indicators)

Goal 1, Action 22: Outdoor Science School Support Funding	CAST (Science) Data indicates the following need to raise the percentage of students who meet or exceed the standard from the following 2023-24 baseline in 5th grade: All (45.94%) ; ELs, (4.39%); SEDs (31.37%); Homeless (**%); 22-23 ELPAC making progress rate is 57.7%. The 2022-23 reclassification rate is 20.7% The data indicate that the needs of English learners and low-income students are significant. The outcome is to have students master State standards through the delivery of instruction that has high engagement practices, monitoring, assessments, and parent communication.	Exposure to outdoor science will increase interest and motivation to improve mastery in the subject of science. The Outdoor Science School gives students opportunities to experience science firsthand that cannot be replicated in a standard classroom. The outcome is to have students master State standards through the delivery of instruction that has high engagement practices, monitoring, assessments, and parent communication. This action is the most effective use of funds to meet the instructional goals for unduplicated populations at elementary sites. District experience has demonstrated the value of the outdoor science school program as a hands-on, experiential learning opportunity that aligns with culturally responsive pedagogy by engaging students in real-world contexts that reflect diverse ways of knowing and learning. Research supports experiential and place-based education as effective strategies for increasing engagement and achievement, especially for students from historically underserved backgrounds, making this investment a priority in our LCAP and budgeting. This action will benefit all students as schools will be able to send all classrooms and students. Teachers will be able to further student knowledge by incorporating this experience into their instruction. This action is being implemented across all elementary schools to ensure equitable access to services, recognizing that each school shares comparable instructional needs in supporting their unduplicated student populations and the ability to support sites that are financially struggling to support their population of unduplicated students.	Goal 1 Metric 44 (CAST)

Goal 2, Action 1 Monterey Teachers (4.0 FTEs)	Unduplicated pupils' who are credit deficient with needs to recover credits to be on-track to graduate. The continuation high school program allows an academically supportive environment, especially for English learners and Socio-Economically Disadvantaged students who make up a large portion (58% Unduplicated) of the learning environment, to thrive with the general population of students who are behind in credits. Oftentimes, these students have been unsuccessful because of chronic absenteeism or because they could not manage the larger comprehensive high school which was too big for them. The district experience has been that students who are in smaller classes with personalized attention from a certificated teacher perform better academically. Additionally, the district has designed flexibility in the academic program for the continuation school with students being able to access the curriculum online as well as in the traditional manner. This action item will allow for class size reduction so that there are 10 to 12 fewer students per class. The data from the California Dashboard on graduation rates is evidence that this action is the most effective use of funds as it allows students the opportunity to recover credit to meet diploma requirements. This is an ongoing action from the 2017-2020 LCAP. Student achievement data shows that English learners, and students experiencing homelessness will achieve in this high school environment.	Four additional teachers at Monterey High School will provide instructional services to unduplicated students in the continuation school environment. - The continuation high school serves a large number of students who represent our low-income students, English learners, and homeless students. - Will increase services to unduplicated students by giving teachers greater opportunities to provide individualized instruction to meet unique student needs. - Low-income, English learners, and homeless youth within this smaller setting will receive small group instruction more regularly, increased 1:1 instruction, closely monitored academic progress, and increased intervention beginning with Tier I and then advancing to Tier II as needed - Increasing teachers will improve communication with parents about the academic and behavioral progress of the unduplicated students on this campus. This is the best use of funds, as credit recovery programs offer students who have failed core courses a second chance to earn the credits needed for graduation. Research shows that 89% of U.S. high schools offer credit recovery, and many districts are expanding these programs to meet growing demand. These programs are especially vital for students who struggle academically in 9th grade, a key predictor of dropout risk. Continuation programs provide flexible pathways for students who face personal, academic, or economic challenges, helping them stay engaged and complete their education. This action is school-wide, as all students at the continuation school will benefit from increased access to curriculum and courses by making available smaller class sizes, flexible scheduling to recover credits while earning new credits. These services will benefit unduplicated students at an increased rate due to the high percentage of unduplicated students at our continuation school.	Goal 2 Metrics 2-8 & 12 (Graduation Rates)

Goal 2, Action 2 Family Services Agency of Burbank (FSA) Counseling Program	Unduplicated mental health and wellness needs are increasing at a rate higher than the general population. English learners and low-income students have shown to have limited access to personal counseling as these families have voiced the inability to procure these services on their own. Research shows that when students are feeling emotionally safe, they are focused on their studies and perform better academically. Unduplicated student groups benefit from this service, as targeted funding gives an avenue for students to seek assistance from an outside agency, as students may not feel comfortable talking with school district staff. Students may feel more comfortable talking with someone who has less affiliation with the school.	The Family Services Agency of Burbank (FSA) provides counseling and mental health services for low-income students, English learners, and homeless students. Academic achievement counseling may also occur depending on the student's needs. The result will be a student who has someone to turn to and help to work with through crisis situation and positively impact his/her academic, social-emotional, and behavioral issue. This action is the most effective use of funds to meet the mental health needs of the unduplicated populations at all sites, as local experience has demonstrated UDP students have limited access to these services outside of school and benefit greatly from access within the school day. This Action is LEA wide as it will benefit all students to have increased access to mental health suervices. It is principally directed to support Unduplicated students receive services they may not have access to outside of school. This action is being implemented across all schools to ensure equitable access to services, recognizing that each school shares comparable mental health needs in supporting their unduplicated student populations.	Goal 2 Metric 10, 11, 12, 13, 16, & 17 (Attendance, Discipline, & School Climate)

Goal 2, Action 3 Secondary Summer School Credit Recovery	Unduplicated pupils' who are credit deficient with needs to recover credits to be on-track to graduate. A large portion of students who take advantage of this learning opportunity is a part of the unduplicated student group. The D/F failure rate is at about 15% and therefore the need for a summer makeup opportunity is great. The opportunities that are provided to students during the summer are in all the core academic areas: English, math, science, and social studies. This program is effective because sometimes a student has only failed one semester of a course, which makes it impossible to remediate during the regular school year when the district does not offer semester-long courses. Additionally, the summer school offerings are not limited to just general education students. The program addresses the needs of Socio-Economically Disadvantaged students and English Language Learners.	Provide opportunities for high school students who have failed one or more courses during the regular school year to make up credits. The failure rate of students who are low-income, English learners, and students experiencing homelessness is at a higher rate than other student subgroups. Credit recovery opportunities help students towards course completion, which leads to graduation. This action is the most effective use of funds to meet the instructional goals for the unduplicated populations at these sites, as they have significant populations in need of credit recovery and/or credits toward graduation within their unduplicated student populations. Credit recovery programs offer students who have failed core courses a second chance to earn the credits needed for graduation. Research shows that 89% of U.S. high schools offer credit recovery, and many districts are expanding these programs to meet growing demand. These programs are especially vital for students who struggle academically in 9th grade, a key predictor of dropout risk. This action is being implemented to support all students to ensure equitable access to services, recognizing that unduplicated students across all schools in the district are supporting their unduplicated student populations to stay on grade level and meet graduation requirements. This action is LEA wide though it is principally directed to support unduplicated students to recover credits over the summer to be on-track for gratuation.	Goal 2 Metrics 1 - 8 & 12 (Graduation Rates)

Goal 2, Action 4 Elementary Wellness & Behavior Specialists (3 FTE)	Unduplicated students often experience chronic absenteeism, frequent tardiness, and/or significant behavioral challenges. Research indicates that when students feel emotionally safe, they are more focused and perform better academically. Elementary principals have identified a need for staff who can respond effectively to students in crisis and collaborate with parents to address attendance issues.	This action meets the needs of our UDP population, as Elementary Wellness and Behavior Specialists will specialize in providing interventions when students have chronic absences; tardy absences, and/or significant behaviors. - Provide 3.0 FTE to serve all elementary schools - Concentrate focus on attendance and behaviors. - Focus is also on character building especially for students in LACP subgroups. - Particularly, a focus on addressing chronic absenteeism. The district will access the services from LACOE and school sites will be given training and assistance from the Department of Student Services. This action is the most effective use of funds to meet the behavioral and attendance needs for the unduplicated populations at elementary sites. As the attendance and behavioral support programs we provide are rooted in Maslow's Hierarchy of Needs and Bronfenbrenner's Ecological Systems Theory, which emphasize that students must have their basic physical, emotional, and social needs met before they can fully engage in learning. For students facing economic hardship, language barriers, or unstable living situations, consistent school attendance and positive behavioral reinforcement create a stable, supportive environment that fosters academic engagement. This action will benefit all students as it will provide increased awareness of socio-emotional learning and opportunities for students to build positive relationships. This action is being implemented across all elementary schools to ensure equitable access to services, recognizing that each school shares comparable instructional needs in supporting their unduplicated student populations.	Goal 2 Metrics 9 - 14 (Discipline/School Climate)

Goal 2, Action 6 School Climate & Mental Health Surveys (Hanover)	Unduplicated students have demonstrated gaps in access to resources, mental health supports, and reduced family engagement with the school and district. There is a need to develop instruments that increase and improve communication with UDP families to better understand the exact needs of our UDP students so that services and resources can be directed to best support families with gaps in access to essential services and supports. Regional data does not consistently mirror the specific needs of our community, so a survey instrument provided by Hanover, tailored to our community, allows for data to be analyzed that represents our community's needs.	This action meets the needs of UDP students as it facilitates BUSD surveys of students, families, and staff annually to collect data on a variety of metrics that give us insight into the perspectives, perceptions, and experiences our students, families, and staff have. We collect and analyze this data through an outside vendor to allow our participants to remain anonymous. Additionally, the results of these surveys help us measure growth in the metrics section of the LCAP. This action is the most effective use of funds to meet the district goals for the unduplicated populations at all sites, as the experience of our site and district administration team in BUSD has validated through local experiences that soliciting feedback is essential to providing a safe and welcoming environment, as well as knowledge and participation in our instructional programs. This action is LEA-wide as it will benefit all students to obtain data and information on how best we can engage, increase, and improve services for unduplicated students.	Goal 2 Metrics 15-17 (School Climate)

Goal 2, Action 7 Partial SOAR Program Staffing (CDS) (1 teacher; 1 para; 2 specialists)	Unduplicated pupils' academic achievement in mathematics and literacy, and acquisition of English for EL students who have behavior patterns that violate education code on a regular basis. The action being developed is based on the needs of English learners, socioeconomically disadvantaged students (low-income students), and foster youth. The following data set provides the reader with additional data for comparative purposes. ELA SBAC data indicates the following need to raise the percentage of students who meet or exceed the standard from the following 2022-23 baseline: All (58.43%); ELs (13.41%); SEDs (47.15%); Homeless (42.86%); Foster (**%). Math SBAC data indicates the following need to raise the percentage of students who meet or exceed the standard from the following 2022-23 baseline: All (44.40%); ELs (15.14%); SEDs (32.74%); Homeless (28.58%); Foster (**%). 22-23 ELPAC making progress rate is 57.7%. 2022-23 reclassification rate is 20.7% The data indicate that the needs of English learners and low-income students are significant. **% Population too small for public results for this subgroup.	This action item will provide the necessary resources to run smaller class sizes at the SOAR program for our targeted subgroups of students. The SOAR program allows an academically supportive environment for English Learners, socioeconomically disadvantaged, and foster youth to thrive with the general population of students who are behind in credits. Oftentimes, these students have been unsuccessful because of chronic absenteeism or because they had behavioral issues that impeded their ability to learn. This action item will allow for class size reduction so that there are 10 to 12 fewer students per class. Smaller class sizes allow teachers to provide students with direct, interactive instruction as individuals and in small groups. English learners, Foster Youth, and Socio-Economically Disadvantaged students often have learning gaps that require more individual attention. Smaller class sizes provide more opportunities for longer and more frequent teacher/student/teacher instruction and interaction This action is the most effective use of funds to meet the instructional goals for the unduplicated populations, as they have significant populations in need of an alternative education pathway that supports access to curriculum regardless of their behavioral challenges. The data from the California Dashboard on graduation rates is evidence that this action is the most effective use of funds, as it allows students the opportunity to recover credit to meet diploma requirements. The district experience has been that students who are in smaller classes with personalized attention from a certificated teacher perform better academically. Additionally, the district has designed flexibility in the academic program for the SOAR Program, with students being able to access the curriculum online as well as in the traditional manner. This action is LEA-wide as it will benefit all students who will also benefit from an alternative setting due to mounting suspensions and other conduct that does not allow them to remain engaged and enrolled in a comprehensive school site.	Goal 2 Metrics 2-8 & 12 (Graduation Rates & Discipline)

Goal 3, Action 1 Diversity, Equity, & Inclusion Site Teacher Lead Stipends	Unduplicated pupils' academic achievement in mathematics and literacy, and acquisition of English for EL students. Marginalized students within the unduplicated population have demonstrated additional need for teacher training and Professional Development so that the appropriate learning environment can be created to meet their learning needs. The action being developed is based on the needs of English learners and socioeconomically disadvantaged students (low-income students). The following data set provides the reader with additional data for comparative purposes. ELA SBAC data indicates the following need to raise the percentage of students who meet or exceed the standard from the following 2022-23 baseline: All (58.43%); ELs (13.41%); SEDs (47.15%); Homeless (42.86%) Math SBAC data indicates the following need to raise the percentage of students who meet or exceed the standard from the following 2022-23 baseline: All (44.40%); ELs (15.14%); SEDs (32.74%); Homeless (28.58%). 22-23 ELPAC making progress rate is 57.7%. 2022-23 reclassification rate is 20.7% The data indicate that the needs of English learners and low-income students are significant.	This action addressses the neesd of UDP students as a continued extension and progression of the professional development, training, and support our campuses have received in diversity, equity, and inclusion (DEI) practices, a stipend will be given to select teachers on campus who will act as a liaison for students to receive support and voice issues or concerns regarding DEI. Teachers receiving the DEI stipend will collaborate with our DEI consultants and will assist in leading site discussions and professional development for the DEI initiative. This action is the most effective use of funds to increase equity and inclusionary practices in schools and classrooms for unduplicated students. DEI in K–12 classrooms is supported by educational theories like critical pedagogy and social learning, which emphasize empowering students and fostering empathy through inclusive environments. Culturally responsive teaching further shows that students thrive academically when their identities and experiences are reflected in the curriculum. Together, these approaches create equitable learning spaces that benefit all students. This action is LEA-wide and will benefit all students, as all students benefit when their identities and experiences are reflected in the curriculum and instruction provided in classrooms and in schools.	Goal 3 Metrics 1 & 2 (School Climate)

Goal 3, Action 2 Diversity, Equity, & Inclusion Site Lead Collaboration Time	Unduplicated pupils' academic achievement in mathematics and literacy, and acquisition of English for EL students. Marginalized students within the unduplicated population have demonstrated additional need for teacher training and Professional Development so that the appropriate learning environment can be created to meet their learning needs. The action being developed is based on the needs of English learners and socioeconomically disadvantaged students (low-income students). The following data set provides the reader with additional data for comparative purposes. ELA SBAC data indicates the following need to raise the percentage of students who meet or exceed the standard from the following 2022-23 baseline: All (58.43%); ELs (13.41%); SEDs (47.15%); Homeless (42.86%) Math SBAC data indicates the following need to raise the percentage of students who meet or exceed the standard from the following 2022-23 baseline: All (44.40%); ELs (15.14%); SEDs (32.74%); Homeless (28.58%) 22-23 ELPAC making progress rate is 57.7%. 2022-23 reclassification rate is 20.7% The data indicate that the needs of English learners and low-income students are significant.	This action addressses the neesd of UDP students as a continued extension and progression of the professional development, training, and support our campuses have received in diversity, equity, and inclusion (DEI) practices, a stipend will be given to select teachers on campus who will act as a liaison for students to receive support and voice issues or concerns regarding DEI. Teachers receiving the DEI stipend will collaborate with our DEI consultants and will assist in leading site discussions and professional development for the DEI initiative. This action is the most effective use of funds to increase equity and inclusionary practices in schools and classrooms for unduplicated students. DEI in K–12 classrooms is supported by educational theories like critical pedagogy and social learning, which emphasize empowering students and fostering empathy through inclusive environments. Culturally responsive teaching further shows that students thrive academically when their identities and experiences are reflected in the curriculum. Together, these approaches create equitable learning spaces that benefit all students. This action is LEA-wide and will benefit all students, as all students benefit when their identities and experiences are reflected in the curriculum and instruction provided in classrooms and in schools.	Goal 3 Metrics 1 & 2 (School Climate)

Limited Actions

For each action being solely provided to one or more unduplicated student group(s), provide an explanation of (1) the unique identified need(s) of the unduplicated student group(s) being served, (2) how the action is designed to address the identified need(s), and (3) how the effectiveness of the action in improving outcomes for the unduplicated student group(s) will be measured.

Goal and Action #(s)	Identified Need(s)	How the Action(s) are Designed to Address Need(s)	Metric(s) to Monitor Effectiveness
Goal 1, Action 2 Elementary ELD Specialists	The action being developed is based on the needs of English learners. The following data set provides the reader with additional data for comparative purposes. ELA SBAC data indicates the following need to raise the percentage of students who meet or exceed the standard from the following 2022-23 baseline: ELs (13.41%). Math SBAC data indicates the following need to raise the percentage of students who meet or exceed the standard from the following 2022-23 baseline: ELs (15.14%). 22-23 ELPAC making progress rate is 57.7%. 2022-23 reclassification rate is 20.7%	English Language Development Specialists will support English Learners as they: - Organize and conduct professional development in Designated ELD - Monitor progress of English Learners and recently reclassified students - Support Project G.L.A.D. and Step up to Writing training and program implementations - Assist in the analysis of data and review with staff - Provide demonstration lessons - Participate in SST's, IEP's, and the development of ILP's for English learners - Provide direct intervention services to English Learners The work of ELD specialists provide support to teachers, instructional assistants and students will result in increases (or maintaining when at a high level like reclassification rate) in student achievement and teacher/instructional assistant effectiveness.	Goal 1 Metrics 2, 10, 17, & 18 (EL CAASPP & Reclassification of ELs)
Goal 1, Action 3 Elementary ELD Instructional Assistants	The action being developed is based on the needs of English learners. The following data set provides the reader with additional data for comparative purposes. ELA SBAC data indicate the following need to raise the percentage of students who meet or exceed the standard from the following 2022-23 baseline: ELs (13.41%). Math SBAC data indicate the following need to raise the percentage of students who meet or exceed the standard from the following 2022-23 baseline: ELs (15.14%). 22-23 ELPAC making progress rate is 57.7%. 2022-23 reclassification rate is 20.7%	English Language Development Instructional Assistants will: - Provide additional hourly support in E/LA and ELD at the elementary level - Work with small groups of students to allow for differentiation and Tier II intervention - Assist teachers in the implementation of the ELD program - Assist teachers in the implementation of the RtI program The work of ELD instructional assistants provide support to teachers and students will result in increases (or maintaining when at a high level like reclassification rate) in student achievement and teacher/instructional assistant effectiveness on ELA and math SBAC.	Goal 1 Metrics 2, 10, 17, & 18 (EL CAASPP & Reclassification of ELs)

Goal 1, Action 6 Secondary Designated ELD Teachers	The action being developed is based on the needs of English learners to provide supplemental English language development instruction in addition to the core instruction provided at the site. The following data set provides the reader with additional data for comparative purposes. ELA SBAC data indicate the following need to raise the percentage of students who meet or exceed the standard from the following 2022-23 baseline: ELs (13.41%). Math SBAC data indicates the following need to raise the percentage of students who meet or exceed the standard from the following 2022-23 baseline: ELs (15.14%). 22-23 ELPAC making progress rate is 57.7%. 2022-23 reclassification rate is 20.7%	Designated ELD (additional courses) - Provide a separate, additional classes for students who are in Transition English to teach the Standards for ELD (designated ELD) - Support to secondary students who are English learners - Certificated salaries and related statutory benefits.	Goal 1 Metrics 2, 10, 17, & 18 (EL CAASPP & Reclassification of ELs)
Goal 1, Action 13 English Learner Program, Supplemental Supports	There is a need to establish a baseline ELD program for students who are working towards English proficiency as English Learners. ELA SBAC data indicate the following need to raise the percentage of students who meet or exceed the standard from the following 2022-23 baseline: ELs (13.41%). Math SBAC data indicates the following need to raise the percentage of students who meet or exceed the standard from the following 2022-23 baseline: ELs (15.14%). 22-23 ELPAC making progress rate is 57.7%. 2022-23 reclassification rate is 20.7%	The program is designed to increase or improve services by: - Provide support for English Learner students in classes by Instructional Assistants - Provide supplemental materials and supplies to support site-based English Learner programs - Provide liaison support between the school and community for translation, parent contact, and parent education - Implement and monitor the implementation of the Master Plan for English Learners	Goal 1 Metrics 2, 10, 17, & 18 (EL CAASPP & Reclassification of ELs)

Goal 1, Action 18 Secondary Sheltered ELD Sections (Social Studies and Science)	The action being developed is based on the needs of English learners. The following data set provides the reader with additional data for comparative purposes. ELA SBAC data indicate the following need to raise the percentage of students who meet or exceed the standard from the following 2022-23 baseline: ELs (13.41%). Math SBAC data indicates the following need to raise the percentage of students who meet or exceed the standard from the following 2022-23 baseline: ELs (15.14%). 22-23 ELPAC making progress rate is 57.7%. 2022-23 reclassification rate is 20.7%	Secondary Sheltered ELD Sections are designed to reduce class size or dedicate sheltered sections for ELD students in the subjects of Social Science and Science. These subjects are language intensive subjects that require additional support from instructional staff to provide small group instruction and/or differentiation. Smaller class sized or dedicated sections will allow for teaching staff to better support english learners in these core subject areas.	Goal 1 Metrics 2, 10, 17, & 18 (EL CAASPP & Reclassification of ELs)
Goal 1, Action 19 ELD Instructional Assistants, Secondary (5 FTE)	The action being developed is based on the needs of English learners. The following data set provides the reader with additional data for comparative purposes. ELA SBAC data indicates the following need to raise the percentage of students who meet or exceed the standard from the following 2022-23 baseline: ELs (13.41%). Math SBAC data indicates the following need to raise the percentage of students who meet or exceed the standard from the following 2022-23 baseline: ELs (15.14%). 22-23 ELPAC making progress rate is 57.7%. 2022-23 reclassification rate is 20.7%	English Language Development Instructional Assistants - Provide additional hourly support in E/LA and ELD at the elementary level - Work with small groups of students to allow for differentiation and Tier II intervention - Assist teachers in the implementation of the ELD program - Assist teachers in the implementation of the RtI program The work of ELD instructional assistants provide support to teachers and students will result in increases (or maintaining when at a high level like reclassification rate) in student achievement and teacher/instructional assistant effectiveness on ELA and math SBAC.	Goal 1 Metrics 2, 10, 17, & 18 (EL CAASPP & Reclassification of ELs)

Goal 2, Action 5 Homeless/Foster/At-Risk Youth Specialist	Students experiencing homelessness and foster youth students need support accessing local and regional resources. Additionally, traditional methods of communication with families are often times not accessible to families in these circumstances. A need for a staff membe who can act as an advocate on behalf of thes student group and individual students has been identified based on the fequency in which these students' ability to access the academic program as well as additional services and activities is often times overlooked or not addressed by traditional staffing.	Transportation and access to local and regiongal services will be communicated directly with families and individualized communication will be provided to Students and parents experiencing homelessness or who are placed in foster care. Students and famlies will be assisted by this staff to advocate for additional resources and considerations to be able to access the instructional programs as well as other activities and programs.	Goal 2 Metrics 5, 6, 9, 10, 11, 12, 13, & 14 (Foster & Homeless Graduation Rates, Discipline, & School Climate)

For any limited action contributing to meeting the increased or improved services requirement that is associated with a Planned Percentage of Improved Services in the Contributing Summary Table rather than an expenditure of LCFF funds, describe the methodology that was used to determine the contribution of the action towards the proportional percentage, as applicable.

NA

Additional Concentration Grant Funding

A description of the plan for how the additional concentration grant add-on funding identified above will be used to increase the number of staff providing direct services to students at schools that have a high concentration (above 55 percent) of foster youth, English learners, and low-income students, as applicable.

NA

Staff-to-student ratios by type of school and concentration of unduplicated students	Schools with a student concentration of 55 percent or less	Schools with a student concentration of greater than 55 percent
Staff-to-student ratio of classified staff providing direct services to students	NA	NA
Staff-to-student ratio of certificated staff providing direct services to students	NA	NA

Action Tables

2026-2027 Total Planned Expenditures Table

LCAP Year (Input)	1. Projected LCFF Base Grant (Input Dollar Amount)	2. Projected LCFF Supplemental and/or Concentration Grants (Input Dollar Amount)	3. Projected Percentage to Increase or Improve Services for the Coming School Year (2 divided by 1)	LCFF Carryover — Percentage (Input Percentage from Prior Year)	Total Percentage to Increase or Improve Services for the Coming School Year (3 + Carryover %)
2026-2027	$176,169,439.00	$12,617,495.00	7.16%	0.00%	7.16%

Totals:	LCFF Funds	Other State Funds	Local Funds	Federal Funds	Total Funds	Total Personnel	Total Non-personnel
Totals:	$19,880,013.22	$158,985,089.00	$0.00	$0.00	$178,865,102.22	$178,326,372.22	$538,730.00

Goal #	Action #	Action Title	Student Group(s)	Contributing to Increased or Improved Services?	Scope	Unduplicated Student Group(s)	Location	Time Span	Total Personnel	Total Non-personnel	LCFF Funds	Other State Funds	Local Funds	Federal Funds	Total Funds	Planned Percentage of Improved Services
1	1	Elementary Class Size Reduction Grades 4 and 5	All	Yes	Schoolwide	Low Income, English learner (EL)	Specific Grade Spans, 4th and 5th, Specific Schools, Disney Elementary - McKinley Elementary	Ongoing	$284,817	$0	$284,817	$0	$0	$0	$284,817	0.00%
1	2	Elementary ELD Specialists	All	Yes	Limited	English learner (EL)	Specific Grade Spans, TK - 5	Ongoing	$616,584	$0	$616,584	$0	$0	$0	$616,584	0.00%
1	3	Elementary ELD Instructional Assistants	All	Yes	Limited	English learner (EL)	Specific Grade Spans, TK - 5	Ongoing	$1,034,809	$0	$1,034,809	$0	$0	$0	$1,034,809	0.00%

1	4	Dual Immersion Teacher Cost Share	All	Yes	Schoolwide	English learner (EL), Low Income	Specific Schools, McKinley Elementary & Disney Elementary	Ongoing	$672,251	$0	$672,251	$0	$0	$0	$672,251	0.00%
1	5	Dual Immersion Instructional Assistants	All	Yes	Schoolwide	English learner (EL), Low Income	Specific Schools, Disney Elementary & McKinley Elementary	Ongoing	$149,110	$0	$149,110	$0	$0	$0	$149,110	0.00%
1	6	Secondary Designated ELD Teachers	All	Yes	Limited	English learner (EL)	Specific Grade Spans, 6-12	Ongoing	$518,108	$0	$518,108	$0	$0	$0	$518,108	0.00%
1	7	Interpreters for Second Language Learners	All	Yes	LEA-wide	English learner (EL)	All Schools	Ongoing	$70,000	$0	$70,000	$0	$0	$0	$70,000	0.00%
1	8	Induction Professional Development Teacher on Special Assignment	All	Yes	LEA-wide	Low Income, English learner (EL)	All Schools	Ongoing	$30,600	$0	$30,600	$0	$0	$0	$30,600	0.00%
1	9	Professional Development Day Costs for All Teachers (1 1/2 days)	All	Yes	LEA-wide	English learner (EL), Low Income	All Schools	Ongoing	$1,750,000	$0	$1,000,000	$750,000	$0	$0	$1,750,000	0.00%
1	10	Elementary Response to Intervention for Reading/Language Arts, Math, and Socio-Emotional Learning (SEL)	All	Yes	LEA-wide	Low Income, English learner (EL)	Specific Grade Spans, TK - 5	Ongoing	$600,000	$0	$600,000	$0	$0	$0	$600,000	0.00%
1	11	Middle School School Psychologist (2.0 FTEs)	All	Yes	LEA-wide	English learner (EL), Low Income	Specific Grade Spans, 6-8	Ongoing	$313,980	$0	$313,980	$0	$0	$0	$313,980	0.00%
1	12	Behavior Specialists (9.0 FTEs)	All	Yes	LEA-wide	English learner (EL), Low Income	All Schools	Ongoing	$984,168	$0	$984,168	$0	$0	$0	$984,168	0.00%
1	13	English Learner Program, Supplemental Supports	All	Yes	Limited	English learner (EL)	All Schools	Ongoing	$513,399	$0	$513,399	$0	$0	$0	$513,399	0.00%
1	14	Full Time Curriculum Specialists for nine elementary schools	All	Yes	Schoolwide	Low Income, English learner (EL)	Specific Grade Spans, TK - 5	Ongoing	$1,389,784	$0	$1,389,784	$0	$0	$0	$1,389,784	0.00%
1	15	Library Coordinators at Elementary Schools	All	Yes	LEA-wide	English learner (EL), Low Income	Specific Grade Spans, TK - 5	Ongoing	$433,609	$0	$433,609	$0	$0	$0	$433,609	0.00%

1	16	Targeted support for Twice Exceptional students who qualify as GATE and are included in the unduplicated count	All	Yes	LEA-wide	English learner (EL), Low Income	All Schools	Ongoing	$70,000	$0	$70,000	$0	$0	$0	$70,000	0.00%
1	17	Elementary Assistant Principals (Miller & Jefferson 2.0)	All	Yes	Schoolwide	English learner (EL), Low Income	Specific Schools, Miller & Jefferson	Ongoing	$273,447	$0	$273,447	$0	$0	$0	$273,447	0.00%
1	18	Secondary Sheltered ELD Sections (Social Studies and Science)	English learner (EL), Long-term English learner	Yes	Limited	English learner (EL)	Specific Grade Spans, 6-8	Ongoing	$519,726	$0	$519,726	$0	$0	$0	$519,726	0.00%
1	19	ELD Instructional Assistants, Secondary (5 FTE)	English learner (EL), Long-term English learner	Yes	Limited	English learner (EL)	Specific Grade Spans, 6-12	Ongoing	$846,673	$0	$846,673	$0	$0	$0	$846,673	0.00%
1	20	Culturally Responsive Pedagogy PD (K-12 PLCs in ELA & Math)	All	Yes	LEA-wide	Low Income, English learner (EL)	All Schools	Ongoing	$150,000	$0	$150,000	$0	$0	$0	$150,000	0.00%
1	21	RTI Assessment Programs (i-Ready Assessment & School City)	All	Yes	LEA-wide	English learner (EL), Low Income	All Schools	Ongoing	$0	$200,000	$200,000	$0	$0	$0	$200,000	0.00%
1	22	Outdoor Science School Support Funding	All	Yes	LEA-wide	English learner (EL), Low Income	Specific Grade Spans, 5	Ongoing	$0	$20,000	$20,000	$0	$0	$0	$20,000	0.00%
1	23	GATE Program Annual Identification Assessment Process	All	No				Ongoing	$0	$20,000	$0	$20,000	$0	$0	$20,000	0.00%
1	24	District GATE Coordinator	All	No				Ongoing	$25,658	$0	$0	$25,658	$0	$0	$25,658	0.00%
1	25	Music Instrument Repair and Replacement	All	No				Ongoing	$0	$20,000	$0	$20,000	$0	$0	$20,000	0.00%
1	26	Secondary Art Supplies and Materials	All	No				Ongoing	$0	$12,600	$0	$12,600	$0	$0	$12,600	0.00%
1	27	Provide support for students with disabilities to achieve their Individual Education Plan (IEP) goals.	All	No				Ongoing	$39,217,554	$0	$0	$39,217,554	$0	$0	$39,217,554	0.00%
1	28	Elementary Music Teachers Staffing	All	No				Ongoing	$537,498	$0	$0	$537,498	$0	$0	$537,498	0.00%
1	29	Provide CTE Pathway offerings to Secondary Students	All	No				Ongoing	$1,269,998	$0	$0	$1,269,998	$0	$0	$1,269,998	0.00%

1	30	World Language Courses at Middle Schools	Standard English Learners, Low Income, Hispanic or Latino, GATE, English learner (EL)	No				Ongoing	$399,101	$0	$0	$399,101	$0	$0	$399,101	0.00%
2	1	Monterey Teachers (4.0 FTEs)	All	Yes	Schoolwide	English learner (EL), Low Income	Specific Schools, Monterey High School (Continuation)	Ongoing	$578,862	$0	$578,862	$0	$0	$0	$578,862	0.00%
2	2	Family Services Agency of Burbank (FSA) Counseling Program	All	Yes	LEA-wide	Low Income, English learner (EL)	All Schools	Ongoing	$0	$134,130	$134,130	$0	$0	$0	$134,130	0.00%
2	3	Secondary Summer School Credit Recovery	All	Yes	LEA-wide	English learner (EL), Low Income	Specific Grade Spans, 9-12	Ongoing	$20,000	$82,000	$102,000	$0	$0	$0	$102,000	0.00%
2	4	Elementary Wellness & Behavior Specialists (3 FTE)	All	Yes	LEA-wide	English learner (EL), Low Income, Foster Youth	Specific Grade Spans, TK - 5	Ongoing	$335,532	$0	$335,532	$0	$0	$0	$335,532	0.00%
2	5	Homeless/Foster/At-Risk Youth Specialist	Foster Youth, Homeless	Yes	Limited	Foster Youth	All Schools	Ongoing	$58,580	$0	$58,580	$0	$0	$0	$58,580	0.00%
2	6	School Climate & Mental Health Surveys (Hanover)	All	Yes	LEA-wide	English learner (EL), Low Income	All Schools	Ongoing	$0	$50,000	$50,000	$0	$0	$0	$50,000	0.00%
2	7	Partial SOAR Program Staffing (CDS) (1 teacher; 1 para; 2 specialists)	All	Yes	LEA-wide	Low Income, Foster Youth, English learner (EL)	Specific Grade Spans, 9-12	Ongoing	$408,231	$0	$408,231	$0	$0	$0	$408,231	0.00%
3	1	Diversity, Equity, & Inclusion Site Teacher Lead Stipends	All	Yes	LEA-wide	English learner (EL), Low Income	All Schools	Ongoing	$100,756	$0	$100,756	$0	$0	$0	$100,756	0.00%
3	2	Diversity, Equity, & Inclusion Site Lead Collaboration Time	All	Yes	LEA-wide	English learner (EL), Low Income	All Schools	Ongoing	$25,500	$0	$25,500	$0	$0	$0	$25,500	0.00%
3	3	Certificated Personnel and Administrative Costs at the District and Site Level	All	No				Ongoing	$116,732,680	$0	$0	$116,732,680	$0	$0	$116,732,680	0.00%

4	1	Provide Facility and Maintenance Operations staff, including custodians to provide a clean, safe, and secure learning environment for all students.	All	No				Ongoing	$7,395,358	$0	$7,395,358	$0	$0	$0	$7,395,358	0.00%

2026-2027 Contributing Actions Table

1. Projected LCFF Base Grant	2. Projected LCFF Supplemental and/or Concentration Grants	3. Projected Percentage to Increase or Improve Services for the Coming School Year (2 divided by 1)	LCFF Carryover – Percentage (Percentage from prior year)	Total Percentage to Increase or Improve Services for the Coming School Year (3 + Carryover %)	4.Total Planned Contributing Expenditures (LCFF Funds)	5.Total Planned Percentage of Improved Services (%)	Planned Percentage to Increase or Improve Services for the Coming School Year (4 divided by 1, plus 5)	Totals by Type	Total LCFF Funds
$176,169,439.00	$12,617,495.00	7.16%	0.00% - No Carryover	7.16%	$12,484,655.22	0.00%	7.09%	**Total:**	$12,484,655.22
								LEA-wide Total:	$5,028,506.22
								Limited Total:	$4,107,878.64
								Schoolwide Total:	$3,348,270.36

Goal #	Action #	Action Title	Contributing to Increased or Improved Services?	Scope	Unduplicated Student Group(s)	Location	Planned Expenditures for Contributing Actions(LCFF Funds)	Planned Percentage of Improved Services (%)
1	1	Elementary Class Size Reduction Grades 4 and 5	Yes	Schoolwide	Low Income, English learner (EL)	Specific Grade Spans, 4th and 5th, Specific Schools, Disney Elementary - McKinley Elementary	$284,816.64	0.00%
1	2	Elementary ELD Specialists	Yes	Limited	English learner (EL)	Specific Grade Spans, TK - 5	$616,583.88	0.00%
1	3	Elementary ELD Instructional Assistants	Yes	Limited	English learner (EL)	Specific Grade Spans, TK - 5	$1,034,809.38	0.00%

1	4	Dual Immersion Teacher Cost Share	Yes	Schoolwide	English learner (EL), Low Income	Specific Schools, McKinley Elementary & Disney Elementary	$672,251.40	0.00%
1	5	Dual Immersion Instructional Assistants	Yes	Schoolwide	English learner (EL), Low Income	Specific Schools, Disney Elementary & McKinley Elementary	$149,109.72	0.00%
1	6	Secondary Designated ELD Teachers	Yes	Limited	English learner (EL)	Specific Grade Spans, 6-12	$518,107.98	0.00%
1	7	Interpreters for Second Language Learners	Yes	LEA-wide	English learner (EL)	All Schools	$70,000.00	0.00%
1	8	Induction Professional Development Teacher on Special Assignment	Yes	LEA-wide	Low Income, English learner (EL)	All Schools	$30,600.00	0.00%
1	9	Professional Development Day Costs for All Teachers (1 1/2 days)	Yes	LEA-wide	English learner (EL), Low Income	All Schools	$1,000,000.00	0.00%
1	10	Elementary Response to Intervention for Reading/Language Arts, Math, and Socio-Emotional Learning (SEL)	Yes	LEA-wide	Low Income, English learner (EL)	Specific Grade Spans, TK - 5	$600,000.00	0.00%
1	11	Middle School School Psychologist (2.0 FTEs)	Yes	LEA-wide	English learner (EL), Low Income	Specific Grade Spans, 6-8	$313,980.48	0.00%
1	12	Behavior Specialists (9.0 FTEs)	Yes	LEA-wide	English learner (EL), Low Income	All Schools	$984,168.42	0.00%
1	13	English Learner Program, Supplemental Supports	Yes	Limited	English learner (EL)	All Schools	$513,398.64	0.00%
1	14	Full Time Curriculum Specialists for nine elementary schools	Yes	Schoolwide	Low Income, English learner (EL)	Specific Grade Spans, TK - 5	$1,389,783.66	0.00%
1	15	Library Coordinators at Elementary Schools	Yes	LEA-wide	English learner (EL), Low Income	Specific Grade Spans, TK - 5	$433,609.14	0.00%
1	16	Targeted support for Twice Exceptional students who qualify as GATE and are included in the unduplicated count	Yes	LEA-wide	English learner (EL), Low Income	All Schools	$70,000.00	0.00%

1	17	Elementary Assistant Principals (Miller & Jefferson 2.0)	Yes	Schoolwide	English learner (EL), Low Income	Specific Schools, Miller & Jefferson	$273,446.70	0.00%
1	18	Secondary Sheltered ELD Sections (Social Studies and Science)	Yes	Limited	English learner (EL)	Specific Grade Spans, 6-8	$519,725.70	0.00%
1	19	ELD Instructional Assistants, Secondary (5 FTE)	Yes	Limited	English learner (EL)	Specific Grade Spans, 6-12	$846,673.44	0.00%
1	20	Culturally Responsive Pedagogy PD (K-12 PLCs in ELA & Math)	Yes	LEA-wide	Low Income, English learner (EL)	All Schools	$150,000.00	0.00%
1	21	RTI Assessment Programs (i-Ready Assessment & School City)	Yes	LEA-wide	English learner (EL), Low Income	All Schools	$200,000.00	0.00%
1	22	Outdoor Science School Support Funding	Yes	LEA-wide	English learner (EL), Low Income	Specific Grade Spans, 5	$20,000.00	0.00%
2	1	Monterey Teachers (4.0 FTEs)	Yes	Schoolwide	English learner (EL), Low Income	Specific Schools, Monterey High School (Continuation)	$578,862.24	0.00%
2	2	Family Services Agency of Burbank (FSA) Counseling Program	Yes	LEA-wide	Low Income, English learner (EL)	All Schools	$134,130.00	0.00%
2	3	Secondary Summer School Credit Recovery	Yes	LEA-wide	English learner (EL), Low Income	Specific Grade Spans, 9-12	$102,000.00	0.00%
2	4	Elementary Wellness & Behavior Specialists (3 FTE)	Yes	LEA-wide	English learner (EL), Low Income, Foster Youth	Specific Grade Spans, TK - 5	$335,532.06	0.00%
2	5	Homeless/Foster/At-Risk Youth Specialist	Yes	Limited	Foster Youth	All Schools	$58,579.62	0.00%
2	6	School Climate & Mental Health Surveys (Hanover)	Yes	LEA-wide	English learner (EL), Low Income	All Schools	$50,000.00	0.00%
2	7	Partial SOAR Program Staffing (CDS) (1 teacher; 1 para; 2 specialists)	Yes	LEA-wide	Low Income, Foster Youth, English learner (EL)	Specific Grade Spans, 9-12	$408,230.52	0.00%

3	1	Diversity, Equity, & Inclusion Site Teacher Lead Stipends	Yes	LEA-wide	English learner (EL), Low Income	All Schools	$100,755.60	0.00%
3	2	Diversity, Equity, & Inclusion Site Lead Collaboration Time	Yes	LEA-wide	English learner (EL), Low Income	All Schools	$25,500.00	0.00%

2025-2026 Annual Update Table

Totals:	Last Year's Total Planned Expenditures (Total Funds)	Total Estimated Actual Expenditures (Total Funds)
Totals:	$177,601,494.79	$177,589,797.00

Last Year's Goal#	Last Year's Action#	Prior Action/Service Title	Contributed to Increased or Improved Services?	Last Year's Planned Expenditures (Total Funds)	Estimated Actual Expenditures (Input Total Funds)
1	1	Elementary Class Size Reduction Grades 4 and 5	Yes	$219,098.27	$279,232.00
1	2	Elementary ELD Specialists	Yes	$592,730.05	$604,494.00
1	3	Elementary ELD Instructional Assistants	Yes	$1,086,694.00	$1,014,519.00
1	4	Dual Immersion Teacher Cost Share	Yes	$685,969.05	$659,070.00
1	5	Dual Immersion Instructional Assistants	Yes	$139,540.06	$146,186.00
1	6	Secondary Designated ELD Teachers	Yes	$507,948.52	$483,194.00
1	7	Interpreters for Second Language Learner Parents	Yes	$78,102.00	$72,556.00
1	8	Induction Professional Development Teacher on Special Assignment	Yes	$30,000.00	$28,218.00
1	9	Professional Development Day Costs for All Teachers (1 1/2 days)	Yes	$1,000,000.00	$1,000,000.00
1	10	Elementary Response to Intervention for Reading/Language Arts and Math	Yes	$473,376.00	$596,652.00
1	11	Middle School School	Yes	$357,414.00	$307,824.00

		Psychologist (2.0 FTEs)			
1	12	Behavior Specialists (9.0 FTEs)	Yes	$967,072.99	$964,871.00
1	13	English Learner Program, Supplemental Supports	Yes	$478,795.15	$503,332.00
1	14	Full Time Curriculum Specialists for nine elementary schools	Yes	$1,293,890.00	$1,362,533.00
1	15	Library Coordinators at Elementary Schools	Yes	$411,787.26	$425,107.00
1	16	Targeted support for Twice Exceptional students who qualify as GATE and are included in the unduplicated count	Yes	$70,000.00	$41,197.00
1	17	Elementary Assistant Principals (Miller & Jefferson 2.0)	Yes	$321,239.85	$268,085.00
1	18	Secondary Sheltered ELD Sections (Social Studies and Science)	Yes	$511,346.28	$509,535.00
1	19	ELD Instructional Assistants, Secondary (5 FTE)	Yes	$785,155.67	$830,072.00
1	20	Culturally Responsive Pedagogy PD (K-12 PLCs in ELA & Math)	Yes	$125,000.00	$73,044.00
1	21	RTI Assessment Programs (i-Ready Assessment & School City)	Yes	$146,634.00	$163,624.00
1	22	Outdoor Science School Support Funding	Yes	$20,000.00	$0.00
1	23	GATE Program Annual Identification Assessment Process	No	$20,000.00	$21,335.00
1	24	District GATE Coordinator	No	$25,658.00	$25,658.00
1	25	Music Instrument Repair and Replacement	No	$20,000.00	$20,000.00
1	26	Secondary Art Supplies and Materials	No	$12,600.00	$12,600.00
1	27	Provide support for students with disabilities to achieve their Individual Education Plan (IEP) goals.	No	$39,217,554.00	$39,217,554.00

1	28	Elementary Music Teachers Staffing	No	$537,498.00	$537,498.00
1	29	Provide CTE Pathway offerings to Secondary Students	No	$1,269,998.00	$1,269,998.00
1	30	World Language Courses at Middle Schools	No	$399,101.00	$399,101.00
2	1	Monterey Teachers (4.0 FTEs)	Yes	$539,766.94	$567,512.00
2	2	Family Services Agency of Burbank (FSA) Counseling Program	Yes	$131,500.00	$131,500.00
2	3	Secondary Summer School Credit Recovery	Yes	$100,000.00	$24,000.00
2	4	Elementary Wellness & Behavior Specialists (3 FTE)	Yes	$264,579.75	$328,953.00
2	5	Homeless/Foster/At-Risk Youth Specialist	Yes	$53,093.00	$57,431.00
2	6	School Climate & Mental Health Surveys (Hanover)	Yes	$56,279.00	$48,300.00
2	7	Partial SOAR Program Staffing (CDS) (1 teacher; 1 para; 2 specialists)	Yes	$400,255.95	$345,805.00
3	1	Diversity, Equity, & Inclusion Site Teacher Lead Stipends	Yes	$98,780.00	$98,762.00
3	2	Diversity, Equity, & Inclusion Site Lead Collaboration Time	Yes	$25,000.00	$22,407.00
3	3	Certificated Personnel and Administrative Costs at the District and Site Level	No	$116,732,680.00	$116,732,680.00
4	1	Provide Facility and Maintenance Operations staff, including custodians to provide a clean, safe, and secure learning environment for all students.	No	$7,395,358.00	$7,395,358.00

2025-2026 Contributing Actions Annual Update Table

6.Estimated Actual LCFF Supplemental and/or Concentration Grants (Input Dollar Amount):	4.Total Planned Contributing Expenditures (LCFF Funds)	7.Total Estimated Actual Expenditures for Contributing Actions (LCFF Funds)	Difference Between Planned and Estimated Actual Expenditures for Contributing Actions (Subtract 7 from 4)	5.Total Planned Percentage of Improved Services (%)	8.Total Estimated Actual Percentage of Improved Services(%)	Difference Between Planned and Estimated Actual Percentage of Improved Services (Subtract 5 from 8)
$11,925,152.00	$11,971,047.79	$11,957,715.00	$13,332.79	0.00%	0.00%	0.00% - No Difference

Last Year's Goal#	Last Year's Action#	Prior Action/Service Title	Contributed to Increased or Improved Services?	Last Year's Planned Expenditures for Contributing Actions (LCFF Funds)	Estimated Actual Expenditures for Contributing Actions(Input LCFF Funds)	Planned Percentage of Improved Services	Estimated Actual Percentage of Improved Services(Input Percentage)
1	1	Elementary Class Size Reduction Grades 4 and 5	Yes	$219,098.27	$279,232.00	0.00%	0.00%
1	2	Elementary ELD Specialists	Yes	$592,730.05	$604,494.00	0.00%	0.00%
1	3	Elementary ELD Instructional Assistants	Yes	$1,086,694.00	$1,014,519.00	0.00%	0.00%
1	4	Dual Immersion Teacher Cost Share	Yes	$685,969.05	$659,070.00	0.00%	0.00%
1	5	Dual Immersion Instructional Assistants	Yes	$139,540.06	$146,186.00	0.00%	0.00%
1	6	Secondary Designated ELD Teachers	Yes	$507,948.52	$483,194.00	0.00%	0.00%
1	7	Interpreters for Second Language Learner Parents	Yes	$78,102.00	$72,556.00	0.00%	0.00%
1	8	Induction Professional Development Teacher on Special Assignment	Yes	$30,000.00	$28,218.00	0.00%	0.00%
1	9	Professional Development Day Costs for All Teachers (1 1/2 days)	Yes	$1,000,000.00	$1,000,000.00	0.00%	0.00%
1	10	Elementary Response to Intervention for Reading/Language Arts and Math	Yes	$473,376.00	$596,652.00	0.00%	0.00%

1	11	Middle School School Psychologist (2.0 FTEs)	Yes	$357,414.00	$307,824.00	0.00%	0.00%
1	12	Behavior Specialists (9.0 FTEs)	Yes	$967,072.99	$964,871.00	0.00%	0.00%
1	13	English Learner Program, Supplemental Supports	Yes	$478,795.15	$503,332.00	0.00%	0.00%
1	14	Full Time Curriculum Specialists for nine elementary schools	Yes	$1,293,890.00	$1,362,533.00	0.00%	0.00%
1	15	Library Coordinators at Elementary Schools	Yes	$411,787.26	$425,107.00	0.00%	0.00%
1	16	Targeted support for Twice Exceptional students who qualify as GATE and are included in the unduplicated count	Yes	$70,000.00	$41,197.00	0.00%	0.00%
1	17	Elementary Assistant Principals (Miller & Jefferson 2.0)	Yes	$321,239.85	$268,085.00	0.00%	0.00%
1	18	Secondary Sheltered ELD Sections (Social Studies and Science)	Yes	$511,346.28	$509,535.00	0.00%	0.00%
1	19	ELD Instructional Assistants, Secondary (5 FTE)	Yes	$785,155.67	$830,072.00	0.00%	0.00%
1	20	Culturally Responsive Pedagogy PD (K-12 PLCs in ELA & Math)	Yes	$125,000.00	$73,044.00	0.00%	0.00%
1	21	RTI Assessment Programs (i-Ready Assessment & School City)	Yes	$146,634.00	$163,324.00	0.00%	0.00%
1	22	Outdoor Science School Support Funding	Yes	$20,000.00	$0.00	0.00%	0.00%
2	1	Monterey Teachers (4.0 FTEs)	Yes	$539,766.94	$567,512.00	0.00%	0.00%
2	2	Family Services Agency of Burbank (FSA) Counseling Program	Yes	$131,500.00	$131,500.00	0.00%	0.00%
2	3	Secondary Summer School Credit Recovery	Yes	$100,000.00	$24,000.00	0.00%	0.00%
2	4	Elementary Wellness & Behavior Specialists (3 FTE)	Yes	$264,579.75	$328,953.00	0.00%	0.00%
2	5	Homeless/Foster/At-Risk Youth Specialist	Yes	$53,093.00	$57,431.00	0.00%	0.00%

2	6	School Climate & Mental Health Surveys (Hanover)	Yes	$56,279.00	$48,300.00	0.00%	0.00%
2	7	Partial SOAR Program Staffing (CDS) (1 teacher; 1 para; 2 specialists)	Yes	$400,255.95	$345,805.00	0.00%	0.00%
3	1	Diversity, Equity, & Inclusion Site Teacher Lead Stipends	Yes	$98,780.00	$98,762.00	0.00%	0.00%
3	2	Diversity, Equity, & Inclusion Site Lead Collaboration Time	Yes	$25,000.00	$22,407.00	0.00%	0.00%

2025-2026 LCFF Carryover Table

9.Estimated Actual LCFF Base Grant (Input Dollar Amount)	6. Estimated Actual LCFF Supplemental and/or Concentration Grants	LCFF Carryover – Percentage (Percentage from prior year)	10. Total Percentage to Increase or Improve Services for the Current School Year (6 divided by 9 + Carryover %)	7. Total Estimated Actual Expenditures for Contributing Actions (LCFF Funds)	8.Total Estimated Actual Percentage of Improved Services(%)	11. Estimated Actual Percentage of Increased or Improved Services (7 divided by 9, plus 8)	12. LCFF Carryover – Dollar Amount (Subtract 11 from 10 and multiply by 9)	13. LCFF Carryover – Percentage (12 divided by 9)
$157,004,470.00	$11,925,152.00	0.00%	7.60%	$11,957,715.00	0.00%	7.62%	$0.00 - No Carryover	0.00% - No Carryover

Local Control and Accountability Plan Instructions

Plan Summary

Engaging Educational Partners

Goals and Actions

Increased or Improved Services for Foster Youth, English Learners, and Low-Income Students

For additional questions or technical assistance related to the completion of the Local Control and Accountability Plan (LCAP) template, please contact the local county office of education (COE), or the California Department of Education's (CDE's) Local Agency Systems Support Office, by phone at 916-319-0809 or by email at LCFF@cde.ca.gov.

Introduction and Instructions

The Local Control Funding Formula (LCFF) requires local educational agencies (LEAs) to engage their local educational partners in an annual planning process to evaluate their progress within eight state priority areas encompassing all statutory metrics (COEs have 10 state priorities). LEAs document the results of this planning process in the LCAP using the template adopted by the State Board of Education.

The LCAP development process serves three distinct, but related functions:

- **Comprehensive Strategic Planning:** The process of developing and annually updating the LCAP supports comprehensive strategic planning, particularly to address and reduce disparities in opportunities and outcomes between student groups indicated by the California School Dashboard (California *Education Code* [*EC*] Section 52064[e][1]). Strategic planning that is comprehensive connects budgetary decisions to teaching and learning performance data. LEAs should continually evaluate the hard choices they make about the use of limited resources to meet student and community needs to ensure opportunities and outcomes are improved for all students.

- **Meaningful Engagement of Educational Partners:** The LCAP development process should result in an LCAP that reflects decisions made through meaningful engagement (*EC* Section 52064[e][1]). Local educational partners possess valuable perspectives and insights about an LEA's programs and services. Effective strategic planning will incorporate these perspectives and insights in order to identify potential goals and actions to be included in the LCAP.

- **Accountability and Compliance:** The LCAP serves an important accountability function because the nature of some LCAP template sections require LEAs to show that they have complied with various requirements specified in the LCFF statutes and regulations, most notably:

    - Demonstrating that LEAs are increasing or improving services for foster youth, English learners, including long-term English learners, and low-income students in proportion to the amount of additional funding those students generate under LCFF (*EC* Section 52064[b][4-6]).

- Establishing goals, supported by actions and related expenditures, that address the statutory priority areas and statutory metrics (*EC* sections 52064[b][1] and [2]).
    - **NOTE:** As specified in *EC* Section 62064(b)(1), the LCAP must provide a description of the annual goals, for all pupils and each subgroup of pupils identified pursuant to *EC* Section 52052, to be achieved for each of the state priorities. Beginning in 2023–24, *EC* Section 52052 identifies long-term English learners as a separate and distinct pupil subgroup with a numerical significance at 15 students.
- Annually reviewing and updating the LCAP to reflect progress toward the goals (*EC* Section 52064[b][7]).
- Ensuring that all increases attributable to supplemental and concentration grant calculations, including concentration grant add-on funding and/or LCFF carryover, are reflected in the LCAP (*EC* sections 52064[b][6], [8], and [11]).

The LCAP template, like each LEA's final adopted LCAP, is a document, not a process. LEAs must use the template to memorialize the outcome of their LCAP development process, which must: (a) reflect comprehensive strategic planning, particularly to address and reduce disparities in opportunities and outcomes between student groups indicated by the California School Dashboard (Dashboard), (b) through meaningful engagement with educational partners that (c) meets legal requirements, as reflected in the final adopted LCAP. The sections included within the LCAP template do not and cannot reflect the full development process, just as the LCAP template itself is not intended as a tool for engaging educational partners.

If a county superintendent of schools has jurisdiction over a single school district, the county board of education and the governing board of the school district may adopt and file for review and approval a single LCAP consistent with the requirements in *EC* sections 52060, 52062, 52066, 52068, and 52070. The LCAP must clearly articulate to which entity's budget (school district or county superintendent of schools) all budgeted and actual expenditures are aligned.

The revised LCAP template for the 2024–25, 2025–26, and 2026–27 school years reflects statutory changes made through Senate Bill 114 (Committee on Budget and Fiscal Review), Chapter 48, Statutes of 2023 and Senate Bill 153, Chapter 38, Statues of 2024.

At its most basic, the adopted LCAP should attempt to distill not just what the LEA is doing for students in transitional kindergarten through grade twelve (TK–12), but also allow educational partners to understand why, and whether those strategies are leading to improved opportunities and outcomes for students. LEAs are strongly encouraged to use language and a level of detail in their adopted LCAPs intended to be meaningful and accessible for the LEA's diverse educational partners and the broader public.

In developing and finalizing the LCAP for adoption, LEAs are encouraged to keep the following overarching frame at the forefront of the strategic planning and educational partner engagement functions:

> Given present performance across the state priorities and on indicators in the Dashboard, how is the LEA using its budgetary resources to respond to TK–12 student and community needs, and address any performance gaps, including by meeting its obligation to increase or improve services for foster youth, English learners, and low-income students?

LEAs are encouraged to focus on a set of metrics and actions which, based on research, experience, and input gathered from educational partners, the LEA believes will have the biggest impact on behalf of its TK–12 students.

These instructions address the requirements for each section of the LCAP but may include information about effective practices when developing the LCAP and completing the LCAP document. Additionally, the beginning of each template section includes information emphasizing the purpose that section serves.

Plan Summary

Purpose

A well-developed Plan Summary section provides a meaningful context for the LCAP. This section provides information about an LEA's community as well as relevant information about student needs and performance. In order to present a meaningful context for the rest of the LCAP, the content of this section should be clearly and meaningfully related to the content included throughout each subsequent section of the LCAP.

Requirements and Instructions

General Information

A description of the LEA, its schools, and its students in grades transitional kindergarten–12, as applicable to the LEA. LEAs may also provide information about their strategic plan, vision, etc.

Briefly describe the LEA, its schools, and its students in grades TK–12, as applicable to the LEA.

- For example, information about an LEA in terms of geography, enrollment, employment, the number and size of specific schools, recent community challenges, and other such information the LEA may wish to include can enable a reader to more fully understand the LEA's LCAP.
- LEAs may also provide information about their strategic plan, vision, etc.
- As part of this response, identify all schools within the LEA receiving Equity Multiplier funding.

Reflections: Annual Performance

A reflection on annual performance based on a review of the California School Dashboard (Dashboard) and local data.

Reflect on the LEA's annual performance on the Dashboard and local data. This may include both successes and challenges identified by the LEA during the development process.

LEAs are encouraged to highlight how they are addressing the identified needs of student groups, and/or schools within the LCAP as part of this response.

As part of this response, the LEA must identify the following, which will remain unchanged during the three-year LCAP cycle:

- Any school within the LEA that received the lowest performance level on one or more state indicators on the 2023 Dashboard;

- Any student group within the LEA that received the lowest performance level on one or more state indicators on the 2023 Dashboard; and/or

- Any student group within a school within the LEA that received the lowest performance level on one or more state indicators on the 2023 Dashboard.

EC Section 52064.4 requires that an LEA that has unexpended Learning Recovery Emergency Block Grant (LREBG) funds must include one or more actions funded with LREBG funds within the 2025-26, 2026-27 and 2027-28 LCAPs, as applicable to the LEA. To implement the requirements of *EC* Section 52064.4, all LEAs must do the following:

- For the 2025–26, 2026–27, and 2027–28 LCAP years, identify whether or not the LEA has unexpended LREBG funds for the applicable LCAP year.
    - If the LEA has unexpended LREBG funds the LEA must provide the following:
        - The goal and action number for each action that will be funded, either in whole or in part, with LREBG funds; and
        - An explanation of the rationale for selecting each action funded with LREBG funds. This explanation must include:
            - An explanation of how the action is aligned with the allowable uses of funds identified in *EC* Section 32526(c)(2); and
            - An explanation of how the action is expected to address the area(s) of need of students and schools identified in the needs assessment required by *EC* Section 32526(d).
                - For information related to the allowable uses of funds and the required needs assessment, please see the Program Information tab on the LREBG Program Information web page.
            - Actions may be grouped together for purposes of these explanations.
            - The LEA may provide these explanations as part of the action description rather than as part of the Reflections: Annual Performance.
    - If the LEA does not have unexpended LREBG funds, the LEA is not required to conduct the needs assessment required by *EC* Section 32526(d), to provide the information identified above or to include actions funded with LREBG funds within the 2025-26, 2026-27 and 2027-28 LCAPs.

Reflections: Technical Assistance

As applicable, a summary of the work underway as part of technical assistance.

Annually identify the reason(s) the LEA is eligible for or has requested technical assistance consistent with *EC* sections 47607.3, 52071, 52071.5, 52072, or 52072.5, and provide a summary of the work underway as part of receiving technical assistance. The most common form of this technical assistance is frequently referred to as Differentiated Assistance, however this also includes LEAs that have requested technical assistance from their COE.

- If the LEA is not eligible for or receiving technical assistance, the LEA may respond to this prompt as "Not Applicable."

Comprehensive Support and Improvement

An LEA with a school or schools identified for comprehensive support and improvement (CSI) under the Every Student Succeeds Act must respond to the following prompts:

Schools Identified

A list of the schools in the LEA that are eligible for comprehensive support and improvement.

- Identify the schools within the LEA that have been identified for CSI.

Support for Identified Schools

A description of how the LEA has or will support its eligible schools in developing comprehensive support and improvement plans.

- Describe how the LEA has or will support the identified schools in developing CSI plans that included a school-level needs assessment, evidence-based interventions, and the identification of any resource inequities to be addressed through the implementation of the CSI plan.

Monitoring and Evaluating Effectiveness

A description of how the LEA will monitor and evaluate the plan to support student and school improvement.

- Describe how the LEA will monitor and evaluate the implementation and effectiveness of the CSI plan to support student and school improvement.

Engaging Educational Partners

Purpose

Significant and purposeful engagement of parents, students, educators, and other educational partners, including those representing the student groups identified by LCFF, is critical to the development of the LCAP and the budget process. Consistent with statute, such engagement should support comprehensive strategic planning, particularly to address and reduce disparities in opportunities and outcomes between student groups indicated by the Dashboard, accountability, and improvement across the state priorities and locally identified priorities (*EC* Section 52064[e][1]). Engagement of educational partners is an ongoing, annual process.

This section is designed to reflect how the engagement of educational partners influenced the decisions reflected in the adopted LCAP. The goal is to allow educational partners that participated in the LCAP development process and the broader public to understand how the LEA

engaged educational partners and the impact of that engagement. LEAs are encouraged to keep this goal in the forefront when completing this section.

Requirements

School districts and COEs: *EC* Section 52060(g) and *EC* Section 52066(g) specify the educational partners that must be consulted when developing the LCAP:

- Teachers,
- Principals,
- Administrators,
- Other school personnel,
- Local bargaining units of the LEA,
- Parents, and
- Students

A school district or COE receiving Equity Multiplier funds must also consult with educational partners at schools generating Equity Multiplier funds in the development of the LCAP, specifically, in the development of the required focus goal for each applicable school.

Before adopting the LCAP, school districts and COEs must share it with the applicable committees, as identified below under Requirements and Instructions. The superintendent is required by statute to respond in writing to the comments received from these committees. School districts and COEs must also consult with the special education local plan area administrator(s) when developing the LCAP.

Charter schools: *EC* Section 47606.5(d) requires that the following educational partners be consulted with when developing the LCAP:

- Teachers,
- Principals,
- Administrators,
- Other school personnel,
- Parents, and
- Students

A charter school receiving Equity Multiplier funds must also consult with educational partners at the school generating Equity Multiplier funds in the development of the LCAP, specifically, in the development of the required focus goal for the school.

The LCAP should also be shared with, and LEAs should request input from, schoolsite-level advisory groups, as applicable (e.g., schoolsite councils, English Learner Advisory Councils, student advisory groups, etc.), to facilitate alignment between schoolsite and district-level goals. Information and resources that support effective engagement, define student consultation, and provide the requirements for advisory group composition, can be found under Resources on the CDE's LCAP webpage.

Before the governing board/body of an LEA considers the adoption of the LCAP, the LEA must meet the following legal requirements:

- For school districts, see *Education Code* Section 52062;
    - **Note:** Charter schools using the LCAP as the School Plan for Student Achievement must meet the requirements of *EC* Section 52062(a).
- For COEs, see *Education Code* Section 52068; and
- For charter schools, see *Education Code* Section 47606.5.
- **NOTE:** As a reminder, the superintendent of a school district or COE must respond, in writing, to comments received by the applicable committees identified in the *Education Code* sections listed above. This includes the parent advisory committee and may include the English learner parent advisory committee and, as of July 1, 2024, the student advisory committee, as applicable.

Instructions

Respond to the prompts as follows:

A summary of the process used to engage educational partners in the development of the LCAP.

School districts and county offices of education must, at a minimum, consult with teachers, principals, administrators, other school personnel, local bargaining units, parents, and students in the development of the LCAP.

Charter schools must, at a minimum, consult with teachers, principals, administrators, other school personnel, parents, and students in the development of the LCAP.

An LEA receiving Equity Multiplier funds must also consult with educational partners at schools generating Equity Multiplier funds in the development of the LCAP, specifically, in the development of the required focus goal for each applicable school.

Complete the table as follows:

Educational Partners

Identify the applicable educational partner(s) or group(s) that were engaged in the development of the LCAP.

Process for Engagement

Describe the engagement process used by the LEA to involve the identified educational partner(s) in the development of the LCAP. At a minimum, the LEA must describe how it met its obligation to consult with all statutorily required educational partners, as applicable to the type of LEA.

- A sufficient response to this prompt must include general information about the timeline of the process and meetings or other engagement strategies with educational partners. A response may also include information about an LEA's philosophical approach to engaging its educational partners.

- An LEA receiving Equity Multiplier funds must also include a summary of how it consulted with educational partners at schools generating Equity Multiplier funds in the development of the LCAP, specifically, in the development of the required focus goal for each applicable school.

A description of how the adopted LCAP was influenced by the feedback provided by educational partners.

Describe any goals, metrics, actions, or budgeted expenditures in the LCAP that were influenced by or developed in response to the educational partner feedback.

- A sufficient response to this prompt will provide educational partners and the public with clear, specific information about how the engagement process influenced the development of the LCAP. This may include a description of how the LEA prioritized requests of educational partners within the context of the budgetary resources available or otherwise prioritized areas of focus within the LCAP.

- An LEA receiving Equity Multiplier funds must include a description of how the consultation with educational partners at schools generating Equity Multiplier funds influenced the development of the adopted LCAP.

- For the purposes of this prompt, this may also include, but is not necessarily limited to:

    - Inclusion of a goal or decision to pursue a Focus Goal (as described below)
    - Inclusion of metrics other than the statutorily required metrics
    - Determination of the target outcome on one or more metrics
    - Inclusion of performance by one or more student groups in the Measuring and Reporting Results subsection
    - Inclusion of action(s) or a group of actions
    - Elimination of action(s) or group of actions
    - Changes to the level of proposed expenditures for one or more actions
    - Inclusion of action(s) as contributing to increased or improved services for unduplicated students
    - Analysis of effectiveness of the specific actions to achieve the goal
    - Analysis of material differences in expenditures
    - Analysis of changes made to a goal for the ensuing LCAP year based on the annual update process
    - Analysis of challenges or successes in the implementation of actions

Goals and Actions

Purpose

Well-developed goals will clearly communicate to educational partners what the LEA plans to accomplish, what the LEA plans to do in order to accomplish the goal, and how the LEA will know when it has accomplished the goal. A goal statement, associated metrics and expected outcomes, and the actions included in the goal must be in alignment. The explanation for why the LEA included a goal is an opportunity for LEAs to clearly communicate to educational partners and the public why, among the various strengths and areas for improvement highlighted by performance data and strategies and actions that could be pursued, the LEA decided to pursue this goal, and the related metrics, expected outcomes, actions, and expenditures.

A well-developed goal can be focused on the performance relative to a metric or metrics for all students, a specific student group(s), narrowing performance gaps, or implementing programs or strategies expected to impact outcomes. LEAs should assess the performance of their student groups when developing goals and the related actions to achieve such goals.

Requirements and Instructions

LEAs should prioritize the goals, specific actions, and related expenditures included within the LCAP within one or more state priorities. LEAs must consider performance on the state and local indicators, including their locally collected and reported data for the local indicators that are included in the Dashboard, in determining whether and how to prioritize its goals within the LCAP. As previously stated, strategic planning that is comprehensive connects budgetary decisions to teaching and learning performance data. LEAs should continually evaluate the hard choices they make about the use of limited resources to meet student and community needs to ensure opportunities and outcomes are improved for all students, and to address and reduce disparities in opportunities and outcomes between student groups indicated by the Dashboard.

In order to support prioritization of goals, the LCAP template provides LEAs with the option of developing three different kinds of goals:

- Focus Goal: A Focus Goal is relatively more concentrated in scope and may focus on a fewer number of metrics to measure improvement. A Focus Goal statement will be time bound and make clear how the goal is to be measured.
    - All Equity Multiplier goals must be developed as focus goals. For additional information, see Required Focus Goal(s) for LEAs Receiving Equity Multiplier Funding below.
- Broad Goal: A Broad Goal is relatively less concentrated in its scope and may focus on improving performance across a wide range of metrics.
- Maintenance of Progress Goal: A Maintenance of Progress Goal includes actions that may be ongoing without significant changes and allows an LEA to track performance on any metrics not addressed in the other goals of the LCAP.

Requirement to Address the LCFF State Priorities

At a minimum, the LCAP must address all LCFF priorities and associated metrics articulated in *EC* sections 52060(d) and 52066(d), as applicable to the LEA. The *LCFF State Priorities Summary* provides a summary of *EC* sections 52060(d) and 52066(d) to aid in the development of the LCAP.

Respond to the following prompts, as applicable:

Focus Goal(s)

Description

The description provided for a Focus Goal must be specific, measurable, and time bound.

- An LEA develops a Focus Goal to address areas of need that may require or benefit from a more specific and data intensive approach.

- The Focus Goal can explicitly reference the metric(s) by which achievement of the goal will be measured and the time frame according to which the LEA expects to achieve the goal.

Type of Goal

Identify the type of goal being implemented as a Focus Goal.

State Priorities addressed by this goal.

Identify each of the state priorities that this goal is intended to address.

An explanation of why the LEA has developed this goal.

Explain why the LEA has chosen to prioritize this goal.

- An explanation must be based on Dashboard data or other locally collected data.
- LEAs must describe how the LEA identified this goal for focused attention, including relevant consultation with educational partners.
- LEAs are encouraged to promote transparency and understanding around the decision to pursue a focus goal.

Required Focus Goal(s) for LEAs Receiving Equity Multiplier Funding

Description

LEAs receiving Equity Multiplier funding must include one or more focus goals for each school generating Equity Multiplier funding. In addition to addressing the focus goal requirements described above, LEAs must adhere to the following requirements.

Focus goals for Equity Multiplier schoolsites must address the following:

(A) All student groups that have the lowest performance level on one or more state indicators on the Dashboard, and

(B) Any underlying issues in the credentialing, subject matter preparation, and retention of the school's educators, if applicable.

- Focus Goals for each and every Equity Multiplier schoolsite must identify specific metrics for each identified student group, as applicable.
- An LEA may create a single goal for multiple Equity Multiplier schoolsites if those schoolsites have the same student group(s) performing at the lowest performance level on one or more state indicators on the Dashboard or, experience similar issues in the credentialing, subject matter preparation, and retention of the school's educators.
    - When creating a single goal for multiple Equity Multiplier schoolsites, the goal must identify the student groups and the performance levels on the Dashboard that the Focus Goal is addressing; or,

- The common issues the schoolsites are experiencing in credentialing, subject matter preparation, and retention of the school's educators, if applicable.

Type of Goal

Identify the type of goal being implemented as an Equity Multiplier Focus Goal.

State Priorities addressed by this goal.

Identify each of the state priorities that this goal is intended to address.

An explanation of why the LEA has developed this goal.

Explain why the LEA has chosen to prioritize this goal.

- An explanation must be based on Dashboard data or other locally collected data.
- LEAs must describe how the LEA identified this goal for focused attention, including relevant consultation with educational partners.
- LEAs are encouraged to promote transparency and understanding around the decision to pursue a focus goal.
- In addition to this information, the LEA must also identify:
  - The school or schools to which the goal applies

LEAs are encouraged to approach an Equity Multiplier goal from a wholistic standpoint, considering how the goal might maximize student outcomes through the use of LCFF and other funding in addition to Equity Multiplier funds.

- Equity Multiplier funds must be used to supplement, not supplant, funding provided to Equity Multiplier schoolsites for purposes of the LCFF, the Expanded Learning Opportunities Program (ELO-P), the Literacy Coaches and Reading Specialists (LCRS) Grant Program, and/or the California Community Schools Partnership Program (CCSPP).
- This means that Equity Multiplier funds must not be used to replace funding that an Equity Multiplier schoolsite would otherwise receive to implement LEA-wide actions identified in the LCAP or that an Equity Multiplier schoolsite would otherwise receive to implement provisions of the ELO-P, the LCRS, and/or the CCSPP.

Note: *EC* Section 42238.024(b)(1) requires that Equity Multiplier funds be used for the provision of evidence-based services and supports for students. Evidence-based services and supports are based on objective evidence that has informed the design of the service or support and/or guides the modification of those services and supports. Evidence-based supports and strategies are most commonly based on educational research and/or metrics of LEA, school, and/or student performance.

Broad Goal

Description

Describe what the LEA plans to achieve through the actions included in the goal.

- The description of a broad goal will be clearly aligned with the expected measurable outcomes included for the goal.
- The goal description organizes the actions and expected outcomes in a cohesive and consistent manner.
- A goal description is specific enough to be measurable in either quantitative or qualitative terms. A broad goal is not as specific as a focus goal. While it is specific enough to be measurable, there are many different metrics for measuring progress toward the goal.

Type of Goal

Identify the type of goal being implemented as a Broad Goal.

State Priorities addressed by this goal.

Identify each of the state priorities that this goal is intended to address.

An explanation of why the LEA has developed this goal.

Explain why the LEA developed this goal and how the actions and metrics grouped together will help achieve the goal.

Maintenance of Progress Goal

Description

Describe how the LEA intends to maintain the progress made in the LCFF State Priorities not addressed by the other goals in the LCAP.

- Use this type of goal to address the state priorities and applicable metrics not addressed within the other goals in the LCAP.
- The state priorities and metrics to be addressed in this section are those for which the LEA, in consultation with educational partners, has determined to maintain actions and monitor progress while focusing implementation efforts on the actions covered by other goals in the LCAP.

Type of Goal

Identify the type of goal being implemented as a Maintenance of Progress Goal.

State Priorities addressed by this goal.

Identify each of the state priorities that this goal is intended to address.

An explanation of why the LEA has developed this goal.

Explain how the actions will sustain the progress exemplified by the related metrics.

Measuring and Reporting Results:

For each LCAP year, identify the metric(s) that the LEA will use to track progress toward the expected outcomes.

- LEAs must identify metrics for specific student groups, as appropriate, including expected outcomes that address and reduce disparities in outcomes between student groups.

- The metrics may be quantitative or qualitative; but at minimum, an LEA's LCAP must include goals that are measured using all of the applicable metrics for the related state priorities, in each LCAP year, as applicable to the type of LEA.

- To the extent a state priority does not specify one or more metrics (e.g., implementation of state academic content and performance standards), the LEA must identify a metric to use within the LCAP. For these state priorities, LEAs are encouraged to use metrics based on or reported through the relevant local indicator self-reflection tools within the Dashboard.

- **Required metrics for LEA-wide actions:** For each action identified as 1) contributing towards the requirement to increase or improve services for foster youth, English learners, including long-term English learners, and low-income students and 2) being provided on an LEA-wide basis, the LEA must identify one or more metrics to monitor the effectiveness of the action and its budgeted expenditures.

    - These required metrics may be identified within the action description or the first prompt in the increased or improved services section, however the description must clearly identify the metric(s) being used to monitor the effectiveness of the action and the action(s) that the metric(s) apply to.

- **Required metrics for Equity Multiplier goals**: For each Equity Multiplier goal, the LEA must identify:

    - The specific metrics for each identified student group at each specific schoolsite, as applicable, to measure the progress toward the goal, and/or

    - The specific metrics used to measure progress in meeting the goal related to credentialing, subject matter preparation, or educator retention at each specific schoolsite.

- **Required metrics for actions supported by LREBG funds**: To implement the requirements of *EC* Section 52064.4, LEAs with unexpended LREBG funds must include at least one metric to monitor the impact of each action funded with LREBG funds included in the goal.

    - The metrics being used to monitor the impact of each action funded with LREBG funds are not required to be new metrics; they may be metrics that are already being used to measure progress towards goals and actions included in the LCAP.

Complete the table as follows:

Metric

- Enter the metric number.

Metric

- Identify the standard of measure being used to determine progress towards the goal and/or to measure the effectiveness of one or more actions associated with the goal.

Baseline

- Enter the baseline when completing the LCAP for 2024–25.
    - Use the most recent data associated with the metric available at the time of adoption of the LCAP for the first year of the three-year plan. LEAs may use data as reported on the 2023 Dashboard for the baseline of a metric only if that data represents the most recent available data (e.g., high school graduation rate).
    - Using the most recent data available may involve reviewing data the LEA is preparing for submission to the California Longitudinal Pupil Achievement Data System (CALPADS) or data that the LEA has recently submitted to CALPADS.
    - Indicate the school year to which the baseline data applies.
    - The baseline data must remain unchanged throughout the three-year LCAP.
        - This requirement is not intended to prevent LEAs from revising the baseline data if it is necessary to do so. For example, if an LEA identifies that its data collection practices for a particular metric are leading to inaccurate data and revises its practice to obtain accurate data, it would also be appropriate for the LEA to revise the baseline data to align with the more accurate data process and report its results using the accurate data.
        - If an LEA chooses to revise its baseline data, then, at a minimum, it must clearly identify the change as part of its response to the description of changes prompt in the Goal Analysis for the goal. LEAs are also strongly encouraged to involve their educational partners in the decision of whether or not to revise a baseline and to communicate the proposed change to their educational partners.
    - Note for Charter Schools: Charter schools developing a one- or two-year LCAP may identify a new baseline each year, as applicable.

Year 1 Outcome

- When completing the LCAP for 2025–26, enter the most recent data available. Indicate the school year to which the data applies.

- Note for Charter Schools: Charter schools developing a one-year LCAP may provide the Year 1 Outcome when completing the LCAP for both 2025–26 and 2026–27 or may provide the Year 1 Outcome for 2025–26 and provide the Year 2 Outcome for 2026–27.

Year 2 Outcome

- When completing the LCAP for 2026–27, enter the most recent data available. Indicate the school year to which the data applies.
    - Note for Charter Schools: Charter schools developing a one-year LCAP may identify the Year 2 Outcome as not applicable when completing the LCAP for 2026–27 or may provide the Year 2 Outcome for 2026–27.

Target for Year 3 Outcome

- When completing the first year of the LCAP, enter the target outcome for the relevant metric the LEA expects to achieve by the end of the three-year LCAP cycle.
    - Note for Charter Schools: Charter schools developing a one- or two-year LCAP may identify a Target for Year 1 or Target for Year 2, as applicable.

Current Difference from Baseline

- When completing the LCAP for 2025–26 and 2026–27, enter the current difference between the baseline and the yearly outcome, as applicable.
    - Note for Charter Schools: Charter schools developing a one- or two-year LCAP will identify the current difference between the baseline and the yearly outcome for Year 1 and/or the current difference between the baseline and the yearly outcome for Year 2, as applicable.

Timeline for school districts and COEs for completing the "**Measuring and Reporting Results**" part of the Goal.

Metric	Baseline	Year 1 Outcome	Year 2 Outcome	Target for Year 3 Outcome	Current Difference from Baseline
Enter information in this box when completing the LCAP for **2024–25** or when adding a new metric.	Enter information in this box when completing the LCAP for **2024–25** or when adding a new metric.	Enter information in this box when completing the LCAP for **2025–26**. Leave blank until then.	Enter information in this box when completing the LCAP for **2026–27**. Leave blank until then.	Enter information in this box when completing the LCAP for **2024–25** or when adding a new metric.	Enter information in this box when completing the LCAP for **2025–26** and **2026–27**. Leave blank until then.

Goal Analysis:

Enter the LCAP Year.

Using actual annual measurable outcome data, including data from the Dashboard, analyze whether the planned actions were effective towards achieving the goal. "Effective" means the degree to which the planned actions were successful in producing the target result. Respond to the prompts as instructed.

Note: When completing the 2024–25 LCAP, use the 2023–24 Local Control and Accountability Plan Annual Update template to complete the Goal Analysis and identify the Goal Analysis prompts in the 2024–25 LCAP as "Not Applicable."

A description of overall implementation, including any substantive differences in planned actions and actual implementation of these actions, and any relevant challenges and successes experienced with implementation.

- Describe the overall implementation of the actions to achieve the articulated goal, including relevant challenges and successes experienced with implementation.
    - Include a discussion of relevant challenges and successes experienced with the implementation process.
    - This discussion must include any instance where the LEA did not implement a planned action or implemented a planned action in a manner that differs substantively from how it was described in the adopted LCAP.

An explanation of material differences between Budgeted Expenditures and Estimated Actual Expenditures and/or Planned Percentages of Improved Services and Estimated Actual Percentages of Improved Services.

- Explain material differences between Budgeted Expenditures and Estimated Actual Expenditures and between the Planned Percentages of Improved Services and Estimated Actual Percentages of Improved Services, as applicable. Minor variances in expenditures or percentages do not need to be addressed, and a dollar-for-dollar accounting is not required.

A description of the effectiveness or ineffectiveness of the specific actions to date in making progress toward the goal.

- Describe the effectiveness or ineffectiveness of the specific actions to date in making progress toward the goal. "Effectiveness" means the degree to which the actions were successful in producing the target result and "ineffectiveness" means that the actions did not produce any significant or targeted result.
    - In some cases, not all actions in a goal will be intended to improve performance on all of the metrics associated with the goal.
    - When responding to this prompt, LEAs may assess the effectiveness of a single action or group of actions within the goal in the context of performance on a single metric or group of specific metrics within the goal that are applicable to the action(s). Grouping actions with metrics will allow for more robust analysis of whether the strategy the LEA is using to impact a specified set of metrics is working and increase transparency for educational partners. LEAs are encouraged to use such an approach when goals include multiple actions and metrics that are not closely associated.
    - Beginning with the development of the 2024–25 LCAP, the LEA must change actions that have not proven effective over a three-year period.

A description of any changes made to the planned goal, metrics, target outcomes, or actions for the coming year that resulted from reflections on prior practice.

- Describe any changes made to this goal, expected outcomes, metrics, or actions to achieve this goal as a result of this analysis and analysis of the data provided in the Dashboard or other local data, as applicable.
    - As noted above, beginning with the development of the 2024–25 LCAP, the LEA must change actions that have not proven effective over a three-year period. For actions that have been identified as ineffective, the LEA must identify the ineffective action and must include a description of the following:
        - The reasons for the ineffectiveness, and
        - How changes to the action will result in a new or strengthened approach.

Actions:

Complete the table as follows. Add additional rows as necessary.

Action #

- Enter the action number.

Title

- Provide a short title for the action. This title will also appear in the action tables.

Description

- Provide a brief description of the action.
    - For actions that contribute to meeting the increased or improved services requirement, the LEA may include an explanation of how each action is principally directed towards and effective in meeting the LEA's goals for unduplicated students, as described in the instructions for the Increased or Improved Services for Foster Youth, English Learners, and Low-Income Students section.
    - As previously noted, for each action identified as 1) contributing towards the requirement to increase or improve services for foster youth, English learners, including long-term English learners, and low-income students and 2) being provided on an LEA-wide basis, the LEA must identify one or more metrics to monitor the effectiveness of the action and its budgeted expenditures.
    - These required metrics may be identified within the action description or the first prompt in the increased or improved services section; however, the description must clearly identify the metric(s) being used to monitor the effectiveness of the action and the action(s) that the metric(s) apply to.

Total Funds

- Enter the total amount of expenditures associated with this action. Budgeted expenditures from specific fund sources will be provided in the action tables.

Contributing

- Indicate whether the action contributes to meeting the increased or improved services requirement as described in the Increased or Improved Services section using a "Y" for Yes or an "N" for No.
    - **Note:** for each such contributing action, the LEA will need to provide additional information in the Increased or Improved Services section to address the requirements in *California Code of Regulations*, Title 5 [5 *CCR*] Section 15496 in the Increased or Improved Services section of the LCAP.

***Actions for Foster Youth*:** School districts, COEs, and charter schools that have a numerically significant foster youth student subgroup are encouraged to include specific actions in the LCAP designed to meet needs specific to foster youth students.

Required Actions

For English Learners and Long-Term English Learners

- LEAs with 30 or more English learners and/or 15 or more long-term English learners must include specific actions in the LCAP related to, at a minimum:
    - Language acquisition programs, as defined in *EC* Section 306, provided to students, and
    - Professional development for teachers.
    - If an LEA has both 30 or more English learners and 15 or more long-term English learners, the LEA must include actions for both English learners and long-term English learners.

For Technical Assistance

- LEAs eligible for technical assistance pursuant to *EC* sections 47607.3, 52071, 52071.5, 52072, or 52072.5, must include specific actions within the LCAP related to its implementation of the work underway as part of technical assistance. The most common form of this technical assistance is frequently referred to as Differentiated Assistance.

For Lowest Performing Dashboard Indicators

- LEAs that have Red Dashboard indicators for (1) a school within the LEA, (2) a student group within the LEA, and/or (3) a student group within any school within the LEA must include one or more specific actions within the LCAP:
    - The specific action(s) must be directed towards the identified student group(s) and/or school(s) and must address the identified state indicator(s) for which the student group or school received the lowest performance level on the 2023 Dashboard. Each

student group and/or school that receives the lowest performance level on the 2023 Dashboard must be addressed by one or more actions.

    - These required actions will be effective for the three-year LCAP cycle.

For LEAs With Unexpended LREBG Funds

- To implement the requirements of *EC* Section 52064.4, LEAs with unexpended LREBG funds must include one or more actions supported with LREBG funds within the 2025–26, 2026–27, and 2027–28 LCAPs, as applicable to the LEA. Actions funded with LREBG funds must remain in the LCAP until the LEA has expended the remainder of its LREBG funds, after which time the actions may be removed from the LCAP.

    - Prior to identifying the actions included in the LCAP the LEA is required to conduct a needs assessment pursuant to *EC* Section 32526(d). For information related to the required needs assessment please see the Program Information tab on the LREBG Program Information web page. Additional information about the needs assessment and evidence-based resources for the LREBG may be found on the California Statewide System of Support LREBG Resources web page. The required LREBG needs assessment may be part of the LEAs regular needs assessment for the LCAP if it meets the requirements of *EC* Section 32526(d).

    - School districts receiving technical assistance and COEs providing technical assistance are encouraged to use the technical assistance process to support the school district in conducting the required needs assessment, the selection of actions funded by the LREBG and/or the evaluation of implementation of the actions required as part of the LCAP annual update process.

    - As a reminder, LREBG funds must be used to implement one or more of the purposes articulated in *EC* Section 32526(c)(2).

    - LEAs with unexpended LREBG funds must include one or more actions supported by LREBG funds within the LCAP. For each action supported by LREBG funding the action description must:

        - Identify the action as an LREBG action;

        - Include an explanation of how research supports the selected action;

        - Identify the metric(s) being used to monitor the impact of the action; and

        - Identify the amount of LREBG funds being used to support the action.

Increased or Improved Services for Foster Youth, English Learners, and Low-Income Students

Purpose

A well-written Increased or Improved Services section provides educational partners with a comprehensive description, within a single dedicated section, of how an LEA plans to increase or improve services for its unduplicated students as defined in *EC* Section 42238.02 in grades TK–12 as compared to all students in grades TK–12, as applicable, and how LEA-wide or schoolwide actions identified for this purpose meet regulatory requirements. Descriptions provided should include sufficient detail yet be sufficiently succinct to promote a broader understanding of educational partners to facilitate their ability to provide input. An LEA's description in this section must align with the actions included in the Goals and Actions section as contributing.

Please Note: For the purpose of meeting the Increased or Improved Services requirement and consistent with *EC* Section 42238.02, long-term English learners are included in the English learner student group.

Statutory Requirements

An LEA is required to demonstrate in its LCAP how it is increasing or improving services for its students who are foster youth, English learners, and/or low-income, collectively referred to as unduplicated students, as compared to the services provided to all students in proportion to the increase in funding it receives based on the number and concentration of unduplicated students in the LEA (*EC* Section 42238.07[a][1], *EC* Section 52064[b][8][B]; 5 *CCR* Section 15496[a]). This proportionality percentage is also known as the "minimum proportionality percentage" or "MPP." The manner in which an LEA demonstrates it is meeting its MPP is two-fold: (1) through the expenditure of LCFF funds or through the identification of a Planned Percentage of Improved Services as documented in the Contributing Actions Table, and (2) through the explanations provided in the Increased or Improved Services for Foster Youth, English Learners, and Low-Income Students section.

To improve services means to grow services in quality and to increase services means to grow services in quantity. Services are increased or improved by those actions in the LCAP that are identified in the Goals and Actions section as contributing to the increased or improved services requirement, whether they are provided across the entire LEA (LEA-wide action), provided to an entire school (Schoolwide action), or solely provided to one or more unduplicated student group(s) (Limited action).

Therefore, for *any* action contributing to meet the increased or improved services requirement, the LEA must include an explanation of:

- How the action is increasing or improving services for the unduplicated student group(s) (Identified Needs and Action Design), and
- How the action meets the LEA's goals for its unduplicated pupils in the state and any local priority areas (Measurement of Effectiveness).

LEA-wide and Schoolwide Actions

In addition to the above required explanations, LEAs must provide a justification for why an LEA-wide or Schoolwide action is being provided to all students and how the action is intended to improve outcomes for unduplicated student group(s) as compared to all students.

- Conclusory statements that a service will help achieve an expected outcome for the goal, without an explicit connection or further explanation as to how, are not sufficient.

- Further, simply stating that an LEA has a high enrollment percentage of a specific student group or groups does not meet the increased or improved services standard because enrolling students is not the same as serving students.

For School Districts Only

Actions provided on an **LEA-wide** basis at **school districts with an unduplicated pupil percentage of less than 55 percent** must also include a description of how the actions are the most effective use of the funds to meet the district's goals for its unduplicated pupils in the state and any local priority areas. The description must provide the basis for this determination, including any alternatives considered, supporting research, experience, or educational theory.

Actions provided on a **Schoolwide** basis for **schools with less than 40 percent enrollment of unduplicated pupils** must also include a description of how these actions are the most effective use of the funds to meet the district's goals for its unduplicated pupils in the state and any local priority areas. The description must provide the basis for this determination, including any alternatives considered, supporting research, experience, or educational theory.

Requirements and Instructions

Complete the tables as follows:

Total Projected LCFF Supplemental and/or Concentration Grants

- Specify the amount of LCFF supplemental and concentration grant funds the LEA estimates it will receive in the coming year based on the number and concentration of foster youth, English learner, and low-income students. This amount includes the Additional 15 percent LCFF Concentration Grant.

Projected Additional 15 percent LCFF Concentration Grant

- Specify the amount of additional LCFF concentration grant add-on funding, as described in *EC* Section 42238.02, that the LEA estimates it will receive in the coming year.

Projected Percentage to Increase or Improve Services for the Coming School Year

- Specify the estimated percentage by which services for unduplicated pupils must be increased or improved as compared to the services provided to all students in the LCAP year as calculated pursuant to 5 *CCR* Section 15496(a)(7).

LCFF Carryover — Percentage

- Specify the LCFF Carryover — Percentage identified in the LCFF Carryover Table. If a carryover percentage is not identified in the LCFF Carryover Table, specify a percentage of zero (0.00%).

LCFF Carryover — Dollar

- Specify the LCFF Carryover — Dollar amount identified in the LCFF Carryover Table. If a carryover amount is not identified in the LCFF Carryover Table, specify an amount of zero ($0).

Total Percentage to Increase or Improve Services for the Coming School Year

- Add the Projected Percentage to Increase or Improve Services for the Coming School Year and the Proportional LCFF Required Carryover Percentage and specify the percentage. This is the LEA's percentage by which services for unduplicated pupils must be increased or improved as compared to the services provided to all students in the LCAP year, as calculated pursuant to 5 *CCR* Section 15496(a)(7).

Required Descriptions:

LEA-wide and Schoolwide Actions

For each action being provided to an entire LEA or school, provide an explanation of (1) the unique identified need(s) of the unduplicated student group(s) for whom the action is principally directed, (2) how the action is designed to address the identified need(s) and why it is being provided on an LEA or schoolwide basis, and (3) the metric(s) used to measure the effectiveness of the action in improving outcomes for the unduplicated student group(s).

If the LEA has provided this required description in the Action Descriptions, state as such within the table.

Complete the table as follows:

Identified Need(s)

Provide an explanation of the unique identified need(s) of the LEA's unduplicated student group(s) for whom the action is principally directed.

An LEA demonstrates how an action is principally directed towards an unduplicated student group(s) when the LEA explains the need(s), condition(s), or circumstance(s) of the unduplicated student group(s) identified through a needs assessment and how the action addresses them. A meaningful needs assessment includes, at a minimum, analysis of applicable student achievement data and educational partner feedback.

How the Action(s) are Designed to Address Need(s) and Why it is Provided on an LEA-wide or Schoolwide Basis

Provide an explanation of how the action as designed will address the unique identified need(s) of the LEA's unduplicated student group(s) for whom the action is principally directed and the rationale for why the action is being provided on an LEA-wide or schoolwide basis.

- As stated above, conclusory statements that a service will help achieve an expected outcome for the goal, without an explicit connection or further explanation as to how, are not sufficient.

- Further, simply stating that an LEA has a high enrollment percentage of a specific student group or groups does not meet the increased or improved services standard because enrolling students is not the same as serving students.

Metric(s) to Monitor Effectiveness

Identify the metric(s) being used to measure the progress and effectiveness of the action(s).

Note for COEs and Charter Schools: In the case of COEs and charter schools, schoolwide and LEA-wide are considered to be synonymous.

Limited Actions

For each action being solely provided to one or more unduplicated student group(s), provide an explanation of (1) the unique identified need(s) of the unduplicated student group(s) being served, (2) how the action is designed to address the identified need(s), and (3) how the effectiveness of the action in improving outcomes for the unduplicated student group(s) will be measured.

If the LEA has provided the required descriptions in the Action Descriptions, state as such.

Complete the table as follows:

Identified Need(s)

Provide an explanation of the unique need(s) of the unduplicated student group(s) being served identified through the LEA's needs assessment. A meaningful needs assessment includes, at a minimum, analysis of applicable student achievement data and educational partner feedback.

How the Action(s) are Designed to Address Need(s)

Provide an explanation of how the action is designed to address the unique identified need(s) of the unduplicated student group(s) being served.

Metric(s) to Monitor Effectiveness

Identify the metric(s) being used to measure the progress and effectiveness of the action(s).

For any limited action contributing to meeting the increased or improved services requirement that is associated with a Planned Percentage of Improved Services in the Contributing Summary Table rather than an expenditure of LCFF funds, describe the methodology that was used to determine the contribution of the action towards the proportional percentage, as applicable.

- For each action with an identified Planned Percentage of Improved Services, identify the goal and action number and describe the methodology that was used.
- When identifying a Planned Percentage of Improved Services, the LEA must describe the methodology that it used to determine the contribution of the action towards the proportional percentage. The percentage of improved services for an action corresponds to the amount of LCFF funding that the LEA estimates it would expend to implement the action if it were funded.

- For example, an LEA determines that there is a need to analyze data to ensure that instructional aides and expanded learning providers know what targeted supports to provide to students who are foster youth. The LEA could implement this action by hiring additional staff to collect and analyze data and to coordinate supports for students, which, based on the LEA's current pay scale, the LEA estimates would cost $165,000. Instead, the LEA chooses to utilize a portion of existing staff time to analyze data relating to students who are foster youth. This analysis will then be shared with site principals who will use the data to coordinate services provided by instructional assistants and expanded learning providers to target support to students. In this example, the LEA would divide the estimated cost of $165,000 by the amount of LCFF Funding identified in the Total Planned Expenditures Table and then convert the quotient to a percentage. This percentage is the Planned Percentage of Improved Services for the action.

Additional Concentration Grant Funding

A description of the plan for how the additional concentration grant add-on funding identified above will be used to increase the number of staff providing direct services to students at schools that have a high concentration (above 55 percent) of foster youth, English learners, and low-income students, as applicable.

An LEA that receives the additional concentration grant add-on described in *EC* Section 42238.02 is required to demonstrate how it is using these funds to increase the number of staff who provide direct services to students at schools with an enrollment of unduplicated students that is greater than 55 percent as compared to the number of staff who provide direct services to students at schools with an enrollment of unduplicated students that is equal to or less than 55 percent. The staff who provide direct services to students must be certificated staff and/or classified staff employed by the LEA; classified staff includes custodial staff.

Provide the following descriptions, as applicable to the LEA:

- An LEA that does not receive a concentration grant or the concentration grant add-on must indicate that a response to this prompt is not applicable.

- Identify the goal and action numbers of the actions in the LCAP that the LEA is implementing to meet the requirement to increase the number of staff who provide direct services to students at schools with an enrollment of unduplicated students that is greater than 55 percent.

- An LEA that does not have comparison schools from which to describe how it is using the concentration grant add-on funds, such as a single-school LEA or an LEA that only has schools with an enrollment of unduplicated students that is greater than 55 percent, must describe how it is using the funds to increase the number of credentialed staff, classified staff, or both, including custodial staff, who provide direct services to students at selected schools and the criteria used to determine which schools require additional staffing support.

- In the event that an additional concentration grant add-on is not sufficient to increase staff providing direct services to students at a school with an enrollment of unduplicated students that is greater than 55 percent, the LEA must describe how it is using the funds to retain staff providing direct services to students at a school with an enrollment of unduplicated students that is greater than 55 percent.

Complete the table as follows:

- Provide the staff-to-student ratio of classified staff providing direct services to students with a concentration of unduplicated students that is 55 percent or less and the staff-to-student ratio of classified staff providing direct services to students at schools with a concentration of unduplicated students that is greater than 55 percent, as applicable to the LEA.
    - The LEA may group its schools by grade span (Elementary, Middle/Junior High, and High Schools), as applicable to the LEA.
    - The staff-to-student ratio must be based on the number of full-time equivalent (FTE) staff and the number of enrolled students as counted on the first Wednesday in October of each year.
- Provide the staff-to-student ratio of certificated staff providing direct services to students at schools with a concentration of unduplicated students that is 55 percent or less and the staff-to-student ratio of certificated staff providing direct services to students at schools with a concentration of unduplicated students that is greater than 55 percent, as applicable to the LEA.
    - The LEA may group its schools by grade span (Elementary, Middle/Junior High, and High Schools), as applicable to the LEA.
    - The staff-to-student ratio must be based on the number of FTE staff and the number of enrolled students as counted on the first Wednesday in October of each year.

Action Tables

Complete the Total Planned Expenditures Table for each action in the LCAP. The information entered into this table will automatically populate the other Action Tables. Information is only entered into the Total Planned Expenditures Table, the Annual Update Table, the Contributing Actions Annual Update Table, and the LCFF Carryover Table. The word “input” has been added to column headers to aid in identifying the column(s) where information will be entered. Information is not entered on the remaining Action tables.

The following tables are required to be included as part of the LCAP adopted by the local governing board or governing body:

- Table 1: Total Planned Expenditures Table (for the coming LCAP Year)
- Table 2: Contributing Actions Table (for the coming LCAP Year)
- Table 3: Annual Update Table (for the current LCAP Year)
- Table 4: Contributing Actions Annual Update Table (for the current LCAP Year)
- Table 5: LCFF Carryover Table (for the current LCAP Year)

Note: The coming LCAP Year is the year that is being planned for, while the current LCAP year is the current year of implementation. For example, when developing the 2024–25 LCAP, 2024–25 will be the coming LCAP Year and 2023–24 will be the current LCAP Year.

Total Planned Expenditures Table

In the Total Planned Expenditures Table, input the following information for each action in the LCAP for that applicable LCAP year:

- **LCAP Year**: Identify the applicable LCAP Year.
- **1. Projected LCFF Base Grant**: Provide the total amount estimated LCFF entitlement for the coming school year, excluding the supplemental and concentration grants and the add-ons for the Targeted Instructional Improvement Block Grant program, the former Home-to-School Transportation program, and the Small School District Transportation program, pursuant to 5 *CCR* Section 15496(a)(8). Note that the LCFF Base Grant for purposes of the LCAP also includes the Necessary Small Schools and Economic Recovery Target allowances for school districts, and County Operations Grant for COEs.

  See *EC* sections 2574 (for COEs) and 42238.02 (for school districts and charter schools), as applicable, for LCFF entitlement calculations.
- **2. Projected LCFF Supplemental and/or Concentration Grants:** Provide the total amount of LCFF supplemental and concentration grants estimated on the basis of the number and concentration of unduplicated students for the coming school year.
- **3. Projected Percentage to Increase or Improve Services for the Coming School Year:** This percentage will not be entered; it is calculated based on the Projected LCFF Base Grant and the Projected LCFF Supplemental and/or Concentration Grants, pursuant to 5 *CCR* Section 15496(a)(8). This is the percentage by which services for unduplicated pupils must be increased or improved as compared to the services provided to all students in the coming LCAP year.
- **LCFF Carryover — Percentage:** Specify the LCFF Carryover — Percentage identified in the LCFF Carryover Table from the prior LCAP year. If a carryover percentage is not identified in the LCFF Carryover Table, specify a percentage of zero (0.00%).
- **Total Percentage to Increase or Improve Services for the Coming School Year:** This percentage will not be entered; it is calculated based on the Projected Percentage to Increase or Improve Services for the Coming School Year and the LCFF Carryover — Percentage. ***This is the percentage by which the LEA must increase or improve services for unduplicated pupils as compared to the services provided to all students in the coming LCAP year.***
- **Goal #**: Enter the LCAP Goal number for the action.
- **Action #**: Enter the action's number as indicated in the LCAP Goal.
- **Action Title**: Provide a title of the action.
- **Student Group(s)**: Indicate the student group or groups who will be the primary beneficiary of the action by entering "All," or by entering a specific student group or groups.

- **Contributing to Increased or Improved Services?:** Type "Yes" if the action **is** included as contributing to meeting the increased or improved services requirement; OR, type "No" if the action is **not** included as contributing to meeting the increased or improved services requirement.

- If "Yes" is entered into the Contributing column, then complete the following columns:

    - **Scope**: The scope of an action may be LEA-wide (i.e., districtwide, countywide, or charterwide), schoolwide, or limited. An action that is LEA-wide in scope upgrades the entire educational program of the LEA. An action that is schoolwide in scope upgrades the entire educational program of a single school. An action that is limited in its scope is an action that serves only one or more unduplicated student groups.

    - **Unduplicated Student Group(s)**: Regardless of scope, contributing actions serve one or more unduplicated student groups. Indicate one or more unduplicated student groups for whom services are being increased or improved as compared to what all students receive.

    - **Location**: Identify the location where the action will be provided. If the action is provided to all schools within the LEA, the LEA must indicate "All Schools." If the action is provided to specific schools within the LEA or specific grade spans only, the LEA must enter "Specific Schools" or "Specific Grade Spans." Identify the individual school or a subset of schools or grade spans (e.g., all high schools or grades transitional kindergarten through grade five), as appropriate.

- **Time Span**: Enter "ongoing" if the action will be implemented for an indeterminate period of time. Otherwise, indicate the span of time for which the action will be implemented. For example, an LEA might enter "1 Year," or "2 Years," or "6 Months."

- **Total Personnel**: Enter the total amount of personnel expenditures utilized to implement this action.

- **Total Non-Personnel**: This amount will be automatically calculated based on information provided in the Total Personnel column and the Total Funds column.

- **LCFF Funds**: Enter the total amount of LCFF funds utilized to implement this action, if any. LCFF funds include all funds that make up an LEA's total LCFF target (i.e., base grant, grade span adjustment, supplemental grant, concentration grant, Targeted Instructional Improvement Block Grant, and Home-To-School Transportation).

    - **Note:** For an action to contribute towards meeting the increased or improved services requirement, it must include some measure of LCFF funding. The action may also include funding from other sources, however the extent to which an action contributes to meeting the increased or improved services requirement is based on the LCFF funding being used to implement the action.

- **Other State Funds**: Enter the total amount of Other State Funds utilized to implement this action, if any.

    - **Note:** Equity Multiplier funds must be included in the "Other State Funds" category, not in the "LCFF Funds" category. As a reminder, Equity Multiplier funds must be used to supplement, not supplant, funding provided to Equity Multiplier schoolsites for purposes of the LCFF, the ELO-P, the LCRS, and/or the CCSPP. This means that Equity Multiplier funds must not be used to

replace funding that an Equity Multiplier schoolsite would otherwise receive to implement LEA-wide actions identified in the LEA's LCAP or that an Equity Multiplier schoolsite would otherwise receive to implement provisions of the ELO-P, the LCRS, and/or the CCSPP.

- **Local Funds**: Enter the total amount of Local Funds utilized to implement this action, if any.
- **Federal Funds**: Enter the total amount of Federal Funds utilized to implement this action, if any.
- **Total Funds**: This amount is automatically calculated based on amounts entered in the previous four columns.
- **Planned Percentage of Improved Services**: For any action identified as contributing, being provided on a Limited basis to unduplicated students, and that does not have funding associated with the action, enter the planned quality improvement anticipated for the action as a percentage rounded to the nearest hundredth (0.00%). A limited action is an action that only serves foster youth, English learners, and/or low-income students.
    - As noted in the instructions for the Increased or Improved Services section, when identifying a Planned Percentage of Improved Services, the LEA must describe the methodology that it used to determine the contribution of the action towards the proportional percentage. The percentage of improved services for an action corresponds to the amount of LCFF funding that the LEA estimates it would expend to implement the action if it were funded.

      For example, an LEA determines that there is a need to analyze data to ensure that instructional aides and expanded learning providers know what targeted supports to provide to students who are foster youth. The LEA could implement this action by hiring additional staff to collect and analyze data and to coordinate supports for students, which, based on the LEA's current pay scale, the LEA estimates would cost $165,000. Instead, the LEA chooses to utilize a portion of existing staff time to analyze data relating to students who are foster youth. This analysis will then be shared with site principals who will use the data to coordinate services provided by instructional assistants and expanded learning providers to target support to students. In this example, the LEA would divide the estimated cost of $165,000 by the amount of LCFF Funding identified in the Data Entry Table and then convert the quotient to a percentage. This percentage is the Planned Percentage of Improved Services for the action.

Contributing Actions Table

As noted above, information will not be entered in the Contributing Actions Table; however, the 'Contributing to Increased or Improved Services?' column will need to be checked to ensure that only actions with a "Yes" are displaying. If actions with a "No" are displayed or if actions that are contributing are not displaying in the column, use the drop-down menu in the column header to filter only the "Yes" responses.

Annual Update Table

In the Annual Update Table, provide the following information for each action in the LCAP for the relevant LCAP year:

- **Estimated Actual Expenditures**: Enter the total estimated actual expenditures to implement this action, if any.

Contributing Actions Annual Update Table

In the Contributing Actions Annual Update Table, check the 'Contributing to Increased or Improved Services?' column to ensure that only actions with a "Yes" are displaying. If actions with a "No" are displayed or if actions that are contributing are not displaying in the column, use the drop-down menu in the column header to filter only the "Yes" responses. Provide the following information for each contributing action in the LCAP for the relevant LCAP year:

- **6. Estimated Actual LCFF Supplemental and/or Concentration Grants:** Provide the total amount of LCFF supplemental and concentration grants estimated based on the number and concentration of unduplicated students in the current school year.

- **Estimated Actual Expenditures for Contributing Actions**: Enter the total estimated actual expenditure of LCFF funds used to implement this action, if any.

- **Estimated Actual Percentage of Improved Services:** For any action identified as contributing, being provided on a Limited basis only to unduplicated students, and that does not have funding associated with the action, enter the total estimated actual quality improvement anticipated for the action as a percentage rounded to the nearest hundredth (0.00%).

    - Building on the example provided above for calculating the Planned Percentage of Improved Services, the LEA in the example implements the action. As part of the annual update process, the LEA reviews implementation and student outcome data and determines that the action was implemented with fidelity and that outcomes for foster youth students improved. The LEA reviews the original estimated cost for the action and determines that had it hired additional staff to collect and analyze data and to coordinate supports for students that estimated actual cost would have been $169,500 due to a cost of living adjustment. The LEA would divide the estimated actual cost of $169,500 by the amount of LCFF Funding identified in the Data Entry Table and then convert the quotient to a percentage. This percentage is the Estimated Actual Percentage of Improved Services for the action.

LCFF Carryover Table

- **9. Estimated Actual LCFF Base Grant**: Provide the total amount of estimated LCFF Target Entitlement for the current school year, excluding the supplemental and concentration grants and the add-ons for the Targeted Instructional Improvement Block Grant program, the former Home-to-School Transportation program, and the Small School District Transportation program, pursuant to 5 *CCR* Section 15496(a)(8). Note that the LCFF Base Grant for purposes of the LCAP also includes the Necessary Small Schools and Economic Recovery Target allowances for school districts, and County Operations Grant for COEs. See *EC* sections 2574 (for COEs) and 42238.02 (for school districts and charter schools), as applicable, for LCFF entitlement calculations.

- **10. Total Percentage to Increase or Improve Services for the Current School Year:** This percentage will not be entered. The percentage is calculated based on the amounts of the Estimated Actual LCFF Base Grant (9) and the Estimated Actual LCFF Supplemental and/or Concentration Grants (6), pursuant to 5 *CCR* Section 15496(a)(8), plus the LCFF Carryover – Percentage from the prior year. This is the percentage by which services for unduplicated pupils must be increased or improved as compared to the services provided to all students in the current LCAP year.

Calculations in the Action Tables

To reduce the duplication of effort of LEAs, the Action Tables include functionality such as pre-population of fields and cells based on the information provided in the Data Entry Table, the Annual Update Summary Table, and the Contributing Actions Table. For transparency, the functionality and calculations used are provided below.

Contributing Actions Table

- **4. Total Planned Contributing Expenditures (LCFF Funds)**
    - This amount is the total of the Planned Expenditures for Contributing Actions (LCFF Funds) column.
- **5. Total Planned Percentage of Improved Services**
    - This percentage is the total of the Planned Percentage of Improved Services column.
- **Planned Percentage to Increase or Improve Services for the coming school year (4 divided by 1, plus 5)**
    - This percentage is calculated by dividing the Total Planned Contributing Expenditures (4) by the Projected LCFF Base Grant (1), converting the quotient to a percentage, and adding it to the Total Planned Percentage of Improved Services (5).

Contributing Actions Annual Update Table

Pursuant to *EC* Section 42238.07(c)(2), if the Total Planned Contributing Expenditures (4) is less than the Estimated Actual LCFF Supplemental and Concentration Grants (6), the LEA is required to calculate the difference between the Total Planned Percentage of Improved Services (5) and the Total Estimated Actual Percentage of Improved Services (7). If the Total Planned Contributing Expenditures (4) is equal to or greater than the Estimated Actual LCFF Supplemental and Concentration Grants (6), the Difference Between Planned and Estimated Actual Percentage of Improved Services will display "Not Required."

- **6. Estimated Actual LCFF Supplemental and Concentration Grants**
    - This is the total amount of LCFF supplemental and concentration grants the LEA estimates it will actually receive based on the number and concentration of unduplicated students in the current school year.
- **4. Total Planned Contributing Expenditures (LCFF Funds)**
    - This amount is the total of the Last Year's Planned Expenditures for Contributing Actions (LCFF Funds).
- **7. Total Estimated Actual Expenditures for Contributing Actions**
    - This amount is the total of the Estimated Actual Expenditures for Contributing Actions (LCFF Funds).
- **Difference Between Planned and Estimated Actual Expenditures for Contributing Actions (Subtract 7 from 4)**

- This amount is the Total Estimated Actual Expenditures for Contributing Actions (7) subtracted from the Total Planned Contributing Expenditures (4).

- **5. Total Planned Percentage of Improved Services (%)**
  - This amount is the total of the Planned Percentage of Improved Services column.
- **8. Total Estimated Actual Percentage of Improved Services (%)**
  - This amount is the total of the Estimated Actual Percentage of Improved Services column.
- **Difference Between Planned and Estimated Actual Percentage of Improved Services (Subtract 5 from 8)**
  - This amount is the Total Planned Percentage of Improved Services (5) subtracted from the Total Estimated Actual Percentage of Improved Services (8).

LCFF Carryover Table

- **10. Total Percentage to Increase or Improve Services for the Current School Year (6 divided by 9 plus Carryover %)**
  - This percentage is the Estimated Actual LCFF Supplemental and/or Concentration Grants (6) divided by the Estimated Actual LCFF Base Grant (9) plus the LCFF Carryover – Percentage from the prior year.
- **11. Estimated Actual Percentage of Increased or Improved Services (7 divided by 9, plus 8)**
  - This percentage is the Total Estimated Actual Expenditures for Contributing Actions (7) divided by the LCFF Funding (9), then converting the quotient to a percentage and adding the Total Estimated Actual Percentage of Improved Services (8).
- **12. LCFF Carryover — Dollar Amount LCFF Carryover (Subtract 11 from 10 and multiply by 9)**
  - If the Estimated Actual Percentage of Increased or Improved Services (11) is less than the Estimated Actual Percentage to Increase or Improve Services (10), the LEA is required to carry over LCFF funds.

    The amount of LCFF funds is calculated by subtracting the Estimated Actual Percentage to Increase or Improve Services (11) from the Estimated Actual Percentage of Increased or Improved Services (10) and then multiplying by the Estimated Actual LCFF Base Grant (9). This amount is the amount of LCFF funds that is required to be carried over to the coming year.
- **13. LCFF Carryover — Percentage (12 divided by 9)**
  - This percentage is the unmet portion of the Percentage to Increase or Improve Services that the LEA must carry over into the coming LCAP year. The percentage is calculated by dividing the LCFF Carryover (12) by the LCFF Funding (9).

LCFF Budget Overview for Parents

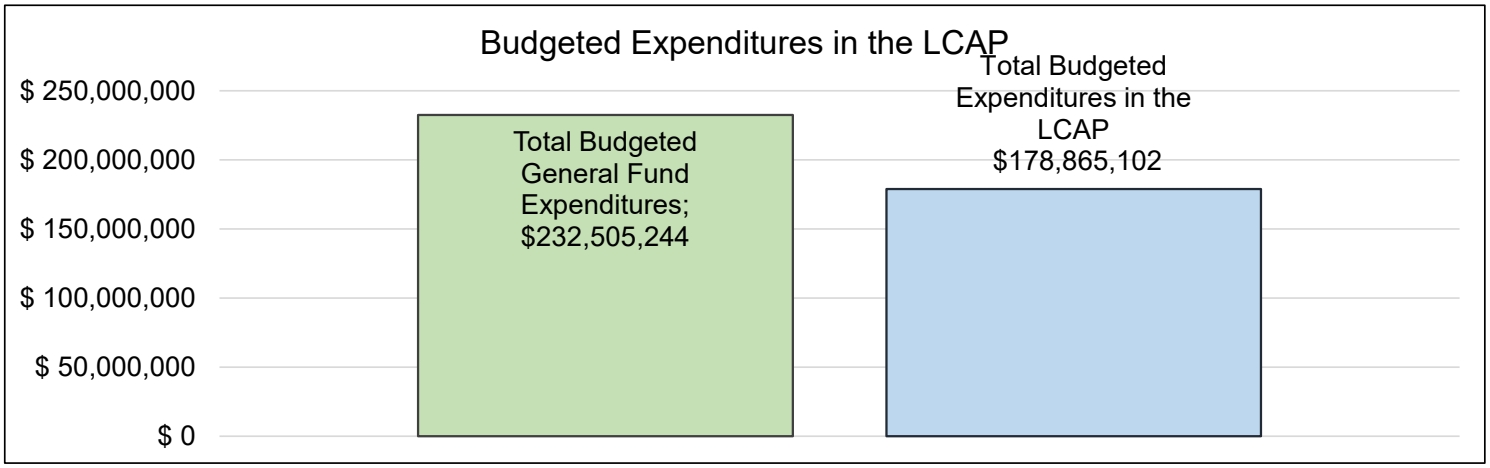

This chart provides a quick summary of how much Burbank Unified School District plans to spend for 2026-27. It shows how much of the total is tied to planned actions and services in the LCAP.

The text description of the above chart is as follows: Burbank Unified School District plans to spend $232,505,244.00 for the 2026-27 school year. Of that amount, $178,865,102.22 is tied to actions/services in the LCAP and $53,640,141.78 is not included in the LCAP. The budgeted expenditures that are not included in the LCAP will be used for the following:

General Fund Budget Expenditures not in included in the LCAP will be primarily used for personnel costs including benefits and retirement contributions for non-certificated staff. Non-certificated includes operations, finance, purchasing, Human Resources, instructional support staff, and office/secretarial staff. Facility and Maintenance Operations staff, including custodians to provide a clean, safe, and secure learning environment for all students is anticipated to cost $7,395,358.

Increased or Improved Services for High Needs Students in the LCAP for the 2026-27 School Year

In 2026-27, Burbank Unified School District is projecting it will receive $12,617,495.00 based on the enrollment of foster youth, English learner, and low-income students. Burbank Unified School District must describe how it intends to increase or improve services for high needs students in the LCAP. Burbank Unified School District plans to spend $12,484,655.22 towards meeting this requirement, as described in the LCAP. The additional improved services described in the plan include the following:

LCFF Budget Overview for Parents

Update on Increased or Improved Services for High Needs Students in 2025-26

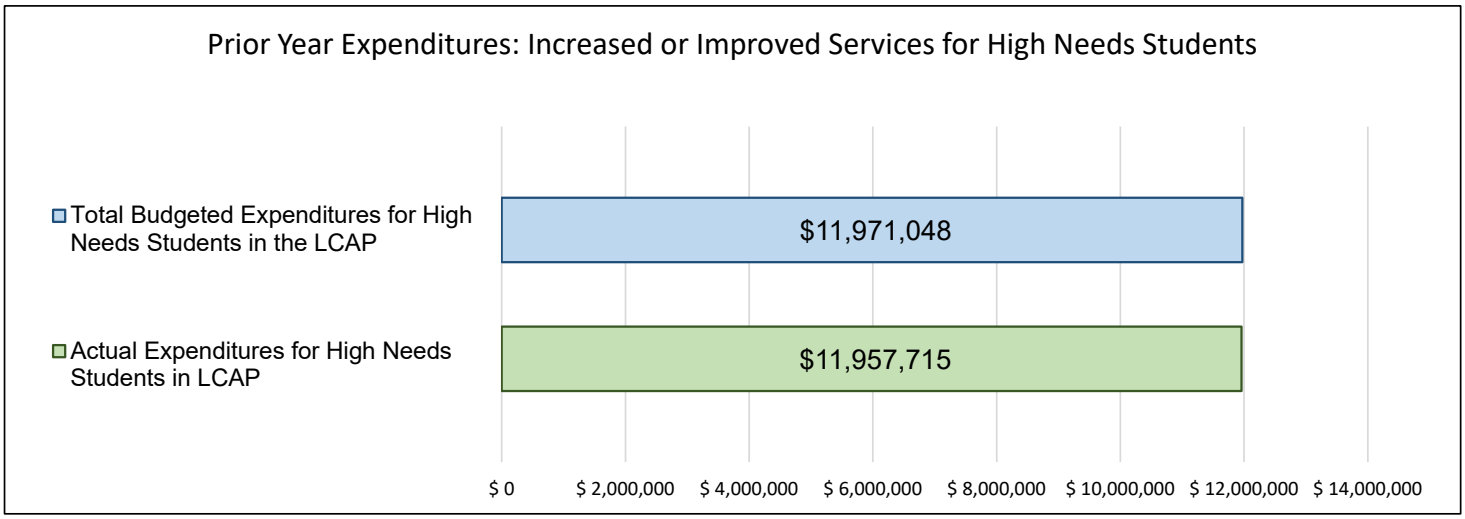

This chart compares what Burbank Unified School District budgeted last year in the LCAP for actions and services that contribute to increasing or improving services for high needs students with what Burbank Unified School District estimates it has spent on actions and services that contribute to increasing or improving services for high needs students in the current year.

The text description of the above chart is as follows: In 2025-26, Burbank Unified School District's LCAP budgeted $11,971,047.79 for planned actions to increase or improve services for high needs students. Burbank Unified School District actually spent $11,957,715.00 for actions to increase or improve services for high needs students in 2025-26. The difference between the budgeted and actual expenditures of $13,332.79 had the following impact on Burbank Unified School District's ability to increase or improve services for high needs students:

The total estimated actual expenditures for actions and services to increase or improve services for high needs students in 2025-26 ($11,957,715) were within approximately $13,333 (0.1%) of the budgeted amount ($11,971,048). All planned actions and services were implemented as described in the LCAP, and this minor difference did not have a material impact on the District's ability to increase or improve services for unduplicated students. (2025-26 amounts are estimated actuals from the Second Interim Report and will be finalized at year-end.)

Local Control and Accountability Plan

The instructions for completing the Local Control and Accountability Plan (LCAP) follow the template.

Local Educational Agency (LEA) Name	Contact Name and Title	Email and Phone
Burbank Unified	Robyn Anders Director of Instructional Technology & Accountability	robynanders@burbankusd.org 8187294517

Plan Summary 2026-2027

General Information

A description of the LEA, its schools, and its students in grades transitional kindergarten-12, as applicable to the LEA. LEAs may also provide information about their strategic plan, vision, etc.

The Burbank Unified School District serves the community of Burbank, a separate municipality with its own independent government and services. Burbank is located in the San Fernando Valley and is surrounded by Los Angeles, Hollywood, and North Hollywood. The Burbank Unified School District provides a comprehensive, balanced educational program from Transitional Kindergarten through Grade 12, providing a standards-based curriculum that supports basic skills development and concept development while addressing individual differences and needs. The district is governed by a five-member Board of Education and served by central administrative staff. A diverse and culturally enriched student population attends eleven TK-5 elementary schools, three middle schools, two comprehensive high schools, and a continuation school. In addition, the district offers childcare programs, several special education alternative programs, an Independent Learning Academy (independent study program), a continuation school, and an adult school. The total school enrollment for Burbank Unified School District is 13,820. A variety of socioeconomic and demographic backgrounds make up the Burbank community. BUSD students are 49.8% Caucasian (including Armenian, European, and Middle Eastern), 31.0% Hispanic/Latino, 4.6% Asian, 2.9% Filipino, 1.6% African American, 0.2% American Indian, 0.1% Pacific Islander, 6.4% multiple races, and 3.5% declined to state their ethnicity. BUSD has a significant percentage of students with disabilities, which equates to 14.89% special needs. The following is the summary of student counts for each unduplicated student group:
- Socioeconomically Disadvantaged 4,866 35.2%
- English Learners 1,794; 11.9%
- Foster Youth 13 students; 0.1%
- Students Experiencing Homelessness 70 students; 0.5%

In Burbank, multiple languages are spoken, with the top four being English, Armenian, Spanish, Russian, Ukrainian, and Arabic. Funding remains low due to declining enrollment and the lack of an active parcel tax.
The LCAP Plan addresses the Eight State Priorities through the actions and metrics described in this plan. State of California Priorities:
Priority One: Basic (Conditions of Learning)
Priority Two: State Standards (Conditions of Learning)
Priority Three: Parental Involvement (Engagement)
Priority Four: Pupil Achievement (Pupil Outcomes)
Priority Five: Pupil Engagement (Engagement)
Priority Six: School Climate (Engagement)
Priority Seven: Course Access (Conditions of Learning)
Priority Eight: Other Pupil Outcomes (Pupil Outcomes)

No schools in the Burbank Unified School District receive LCFF Equity Multiplier funds.

BUSD Goals for 2024-2027
1. Students will be career/college ready via high-quality instruction of State Standards as measured by State, federal, and District assessment tools, including the California Dashboard.
2. Students will be physically, emotionally, and mentally healthy and supported through Parental Involvement as measured by State, federal, and District assessment tools, including the California Dashboard.
3. Recruit and retain quality employees as measured by full employment of teaching staff with appropriate credentials and placed in appropriate assignments.
4. Efficient and effective operations as measured by appropriate facilities, especially classrooms that are conducive to the needs of the instructional program.

Reflections: Annual Performance

A reflection on annual performance based on a review of the California School Dashboard (Dashboard) and local data.

Based on a review of the 2025 California School Dashboard and local data, the Burbank Unified School District (BUSD) is proud of its historical and ongoing academic progress. The data highlights significant milestones in student achievement, sustained areas of strength, and systemic improvements across multiple indicators.
Greatest Progress and Successes BUSD has demonstrated notable growth and sustained high performance across key academic and engagement metrics:
English Language Arts (ELA): Student achievement in ELA remains a relative strength for the District. Historically earning a "Green" status (2017–2019) and a "High" rating (2022–2023), this positive trend has been well-maintained, resulting in a "Green" performance tier on both the 2024 and 2025 Dashboards.
Mathematics: The District has made measurable academic gains in Mathematics. After receiving a "Medium" rating in 2022–2023 and a "Yellow" status in 2024, BUSD successfully improved its Mathematics performance to a "Green" status on the 2025 Dashboard.
Graduation Rates: High school graduation remains a standout success for BUSD. Traditionally maintaining a "Green" status, the District elevated this metric to the highest "Blue" tier in 2024 (96.3%) and continued to grow in 2025, achieving an impressive 97.4% graduation rate. BUSD considers this 97.4% completion rate a major indicator of our educational program's overall success. Crucially, the graduation rate for several key student groups—including English Learners, Hispanic students, and Socioeconomically Disadvantaged students—has steadily improved over the past three years.
College and Career Readiness: BUSD has made significant strides in preparing students for post-secondary success. The District's College and Career Indicator improved from a "Yellow" status in 2024 (50.6% prepared) to a "Green" status in 2025, with 55.2% of students identified as prepared.
Contributing Factors to Our Success. The improvements in graduation rates and College and Career measures can be directly attributed to targeted, strategic actions implemented by the District, including:
Robust academic and behavioral intervention programs at the middle school level.
Comprehensive credit recovery programs are offered during the academic year and summer. An evolving summer school program focused on credit recovery, alongside targeted initial credit course offerings.
The expansion of Career Technical Education (CTE) pathways in media, medical, and engineering fields.
Increased access to dual enrollment courses in partnership with the local community college.
Identified Challenges and Ongoing Needs. While BUSD celebrates these achievements, the District recognizes that maintaining high performance requires continuous effort, fidelity of implementation, and a focus on areas that still require growth. To build upon our successes, BUSD has identified the following areas of focus for the 2026-2027 LCAP cycle:
Targeted Growth Areas: The District must continue to monitor and support English Learner proficiency (as measured by the ELPAC), continue to reduce Chronic Absenteeism, lower Suspension rates, and provide robust mental and emotional health supports for all students.
Systemic Fidelity: Achieving sustained success requires a staff that is highly trained, well-informed, and equipped to carry out their responsibilities. Implementation of academic programs and wrap-around supports must be executed with fidelity and a strong sense of purpose.
Continuous Monitoring and Expectations: School and District administrators will continue to rigorously monitor student achievement, staff performance, and parental involvement on a daily basis. Furthermore, the Board of Education remains committed to staying informed and setting high expectations for the performance of staff, parents, and students alike.
2023 Dashboard

The following district sub-groups received the lowest performance level on one or more state indicators on the 2023 dashboard:

- Foster Youth Students in Academic Performance in English Language Arts and Mathematics.
- Students with Disabilities in Academic Performance in English Language Arts

The following schools received the lowest performance level on one or more state indicators on the 2023 dashboard:

College and Career Indicator:
- All Students at Monterey High School
Chronic Absenteeism Indicator:
- All students at Independent Learning Academy
- All students at John Muir Middle School
- All students at Walt Disney Elementary School
Suspension Indicator
- All students at Burbank Community Day School
- All students at Monterey High School

The following school sub-groups received the lowest performance level on one or more state indicators on the 2023 dashboard:

Academic Performance in the English Language Arts Indicator:
- English Learners at Dolores Huerta Middle School
- Students with Disabilities at Dolores Huerta Middle School
- Students with Disabilities at Luther Burbank Middle School
Academic Performance in the Mathematics Indicator:
- English Learners at Burbank High School
- English Learners at Dolores Huerta Middle School
- Students with Disabilities at Dolores Huerta Middle School
English Learner Progress Indicator:
- English Learners at George Washington Elementary School
College and Career Indicator:
- Hispanic Students, Socio-Economically Disadvantaged Students, and White Students at Monterey High School
Chronic Absenteeism Indicator:
- Asian Students, Hispanic Students, Students with Disabilities, and Socio-Economically Disadvantaged students at Joaquin Miller Elementary
- English Learners, Hispanic students, Socio-Economically Disadvantaged, Students with Disabilities, and White students at John Muir Middle School
- Hispanic students at R. L. Stevenson Elementary School
- Students with Disabilities at Ralph Emerson Elementary School
- Hispanic and Socio-Economically Disadvantaged Students at Thomas Jefferson Elementary School
- English Learners and Students with Disabilities at Thomas Edison Elementary School
- English Learners, Hispanic, Socio-Economically Disadvantaged, Students with Disabilities and White students at Walt Disney Elementary School
- White students at William McKinley Elementary School
Suspension Indicator:
- African American students and Students with Disabilities at Burbank High School
- Socio-Economically Disadvantaged students at Burroughs High School
- Hispanic and Socio-Economically Disadvantaged at Dolores Huerta Middle School
- Hispanic and White students at Monterey High School

2024 Dashboard

The following district sub-groups received the lowest performance level on one or more state indicators on the 2024 dashboard:
- Long Term English Learners in English Language Arts, Mathematics, Suspension Rate, and Chronic Absenteeism
- Foster Youth Students in Suspensions.
- Students experiencing homelessness in Mathematics

- Students with Disabilities in Academic Performance in English Language Arts

The following schools received the lowest performance level on one or more state indicators on the 2024 dashboard:

College and Career Indicator:
- All Students at Monterey High School
Chronic Absenteeism
- All students at Independent Learning Academy
Mathematics Performance
- All students at Independent Learning Academy
English Language Arts Performance
- All students at Independent Learning Academy
English Learner Progress Indicator
- All students at John Burroughs High School
- All students at Independent Learning Academy

The following school sub-groups received the lowest performance level on one or more state indicators on the 2024 dashboard:

Academic Performance in the English Language Arts Indicator:
- English Learners at Burbank High School
- Long-Term English Learners at John Muir Middle School
- Students with Disabilities at Bret Harte Elementary School
- Students with Disabilities at Burbank High School
- Students with Disabilities at John Burroughs High School
- Students with Disabilities at Luther Burbank Middle School
- Students with Disabilities at William McKinley Elementary School
Academic Performance in the Mathematics Indicator:
- English Learners, Socioeconomically Disadvantaged, Students with Disabilities, Hispanic, and White students at Burbank High School
- Socioeconomically Disadvantaged and White students at Independent Learning Academy
- English Learners at Dolores Huerta Middle School
- Long-Term English Learners at John Muir Middle School
English Learner Progress Indicator:
- English Learners at Independent Learning Academy
- English Learners at John Burroughs High School
College and Career Indicator:
- Hispanic Students and Socio-Economically Disadvantaged Students at Monterey High School
Chronic Absenteeism Indicator:
- Long-Term English Learners at John Muir Middle School
- Students with Disabilities at Ralph Emerson Elementary School
Suspension Indicator:
- English Learners at Dolores Huerta Middle School

2025 Dashboard

The following district sub-groups received the lowest performance level on one or more state indicators on the 2025 dashboard:
Long-Term English Learners in Science.
Foster Youth Students in Suspension Rate.
Students experiencing homelessness in Chronic Absenteeism
Students with Disabilities in Academic Performance in English Language Arts and Mathematics

The following schools received the lowest performance level on one or more state indicators on the 2024 dashboard:

Suspension Rate
All students at Monterey High School

The following school sub-groups received the lowest performance level on one or more state indicators on the 2024 dashboard:

Academic Performance in the English Language Arts Indicator:
English Learners at Burbank High and Dolores Huerta MS
Students with Disabilities at Burbank High, John Burroughs High, Dolores Huerta MS, George Washington ES, and Luther Burbank MS
Academic Performance in the Mathematics Indicator:
English Learners at Dolores Huerta MS
Socioeconomically Disadvantaged Students at Burbank High
Students with Disabilities at Burbank High, John Burroughs High, Dolores Huerta MS, George Washington ES, Luther Burbank MS
White students at Burbank High School
English Learner Progress Indicator:
Long-Term English Learners at Burbank High
Chronic Absenteeism Indicator:
English Learners at Dolores Huerta MS and Luther Burbank MS
Socioeconomically Disadvantaged students at Dolores Huerta MS
Students with Disabilities at John Muir MS, Luther Burbank MS, and Thomas Edison ES
Suspension Indicator:
English Learners at Dolores Huerta MS
Hispanic students at Burbank High and Monterey High
Socioeconomically Disadvantaged students at Monterey High
Students with Disabilities at Burbank High and Dolores Huerta MS

Improving services for the lowest performing subgroups

The following action items will specifically improve services for all district and school subgroups with the lowest performance level in the Academic Performance in the English Language Arts Indicator - specifically, students with disabilities and English learners at multiple sites:
- Goal 1 Action Item 9: Professional Development Day Costs for All Teachers
- Goal 1 Action Item 20: Culturally Responsive Pedagogy Professional Development.

The following action items will specifically improve services for all district and school subgroups with the lowest performance level in the Academic Performance in Mathematics Indicator - specifically, students with disabilities, English learners, socioeconomically disadvantaged, and white students at multiple sites:
- Goal 1 Action Item 6: Secondary Designated ELD Teachers
- Goal 1 Action Item 9: Professional Development Day Costs for All Teachers
- Goal 1 Action Item 20: Culturally Responsive Pedagogy Professional Development

The following action items will specifically improve services for Long-Term English Learners at all school sites for Science:
Goal 1 Action Item 3: Elementary ELD Instructional Assistants
Goal 1 Action Item 10: Elementary Response to Intervention Reading/Language Arts and Math
Goal 1 Action Item 20: Culturally Responsive Pedagogy Professional

The following action items will specifically improve services for the English Language Learner Development at Burbank High School and other sites:
- Goal 1 Action Item 6: Secondary Designated ELD Teachers
- Goal 1 Action Item 19: Secondary ELD Instructional Aides

Other Sites
- Goal 1 Action Item 2: Elementary ELD Specialists
- Goal 1 Action Item 3: Elementary ELD Instructional Assistants
- Goal 1 Action Item 10: Elementary Response to Intervention Reading/Language Arts and Math

The following action items will specifically target English Learners, Students with Disabilities, Socioeconomically Disadvantaged, and Homeless students at multiple sites
- Goal 1 Action Item 10: Elementary Response to Intervention Reading/Language Arts and Math
- Goal 1 Action Item 11: Middle School Psychologists
- Goal 1 Action Item 16: Professional Development for Twice Exceptional Students
- Goal 1 Action Item 20: Culturally Responsive Pedagogy Professional Development
- Goal 2 Action Item 1: Monterey Continuation High School Teachers
- Goal 2 Action Item 2: FSA School-Based Counseling
- Goal 2 Action Item 3: Secondary Credit Recovery
- Goal 2 Action Item 5: Student Services Attendance Specialist Foster/Homeless
- Goal 2 Action Item 7: SOAR Program Staff

The following action items will specifically improve services for suspension rates at Monterey High School, as well as Students with Disabilities, Socioeconomically Disadvantaged, Hispanic students, English Learners, and Foster youth at multiple sites:
- Goal 1 Action Item 20: Culturally Responsive Pedagogy Professional Development
- Goal 2 Action Item 1: Monterey Continuation High School Teachers
- Goal 2 Action Item 2: FSA School-Based Counseling
- Goal 2 Action Item 3: Secondary Credit Recovery
- Goal 2 Action Item 7: SOAR Program Staff

Based on the previously identified results, Burbank Unified School District previously prioritized the need to address chronic absenteeism across all schools and sites, specifically the schools and subgroups identified in 2023. Chronic absenteeism rates have increased during the pandemic and distance learning, and the return to in-person instruction. They increased to 34.6% in 2021-22 (an increase of 27.9%) after dropping to 6.7% before the pandemic, and were reported at 19.7% on the 2022 Dashboard. The current districtwide rate for chronic absenteeism is 11.8%. As the ramifications of the pandemic diminish, we've seen this continue to decline; however, this will be a long-term area of focus.

Mathematics historically is an area for growth. The 2022 Dashboard shows BUSD students scoring 19.1 points below standard on average, and the 2023 Dashboard shows BUSD students scoring 19 points below the standard. The 2025 Dashboard shows all students at 16.5 points below standard. CAASPP results show students in testing grades as 45.56% Meeting or Exceeding the Standard. Mathematics curriculum and instruction are being addressed through focused professional development on standards, the core curriculum, instructional practices, monitoring, credit recovery, and interventions. There is also professional learning community (PLC) work being done by grade levels and departments. "D" and "F" rates are being closely monitored, and when needed, an intervention section or assistance is provided. Additionally, BUSD has actively participated in a Math Collaborative through CAL-ED Partners and is seeing initial signs of progress as D and F rates in High School Algebra I continue to decrease year after year.

Services supporting ELA, such as interventions, will need to be maintained and refocused so that significant student subgroups need remediation; specifically, students with disabilities at specific schools. Additionally, Long-Term English Learners need support as metrics indicated a decrease in reclassified students in2020-2021 during distance learning, as noted in our Goal 1 & 2 Metrics.

During the 2025-2026 school year, the LCAP Advisory Committee, DELAC Parent Advisory Committee, Superintendent's Cabinet, District Leadership Team, and Principals reviewed the planned expected annual measurable outcomes (AMO) outlined in our 2025-2026 LCAP with historical and current data available, including the California School Dashboard and locally collected data through grade reports, diagnostic assessments, and benchmark assessments. Additionally, the committees determined the effectiveness of each service provided and identified strengths, progress, gaps, and areas needing improvement. We specifically looked at any schools, district subgroups, and school subgroups with the lowest performance level on California Dashboard indicators.

Burbank Unified School District (BUSD) expended all original Learning Recovery Emergency Block Grant (LREBG) funds from the first allocation prior to the 2025-2026 school year, with zero LREBG expenditures occurring in 2025-2026. The recent reallocation of unspent funds will be utilized in the 2026-2027 and 2027-2028 LCAP plans. These funds will directly support Goal 1: Students will be career/college ready via high-quality instruction of State Standards as measured by State, federal, and District assessment tools, including the California Dashboard. Specifically, Action 9 (Professional Development) will be increased in implementation and effectiveness by expanding upon pre-existing professional development offerings.
Alignment with Allowable LREBG Uses: In accordance with California Education Code Section 32526, this action directly aligns with the CDE's allowable uses for LREBG

funds. Expanding Professional Development addresses Allowable Use #2 (Accelerating progress to close learning gaps through educator training and collaborative planning/PLCs) and Allowable Use #3 (Integrating pupil supports by providing staff training on attendance and behavioral interventions to ensure a safe, inclusive learning environment).
Addressing the Local Needs Assessment: To ensure these funds target the most critical areas of need, BUSD conducted the Title IIA and Title IV Needs Assessment among instructional staff and educational partners. This needs assessment included the use of LREBG Funds. The survey data strongly validated the need to expand specific professional development areas. Based on the assessment results:
Professional Learning Communities (PLCs): Staff overwhelmingly indicated that structured collaboration (such as "Grade Level Collaboration," "Department Collaboration," and "District-wide articulation") is a High Priority. Expanding PLCs will provide educators with the dedicated time needed to analyze data and plan targeted instruction.
Targeted Support for Vulnerable Populations: The needs assessment highlighted a critical demand for expanded training to meet the needs of the district's lowest-performing student groups, specifically Students with Disabilities and Low-Income students. Furthermore, because BUSD has identified more than 30 students as Long-Term English Learners (LTELs), a significant focus of this expanded professional development will be tailored toward language acquisition strategies and interventions for LTELs, ensuring compliance with state requirements. Additional investment of LREBG funds in Action 1.9 Professional Development for Staff will increase training and Professional Development for LTEL populations. Existing actions such as 1.3 and 1.19, which include ELD instructional aides, have been specifically identified to include all relevant staff for accurate accounting and implementation of current ELD programming, as well as new supplemental curriculum across secondary ELD classrooms.
Attendance and Behavior: As identified in the "Safe and Healthy Schools" section of the survey, respondents consistently ranked "Aggressive Behavior Prevention" and "School-Based Mental Health/Conflict Resolution" as High Priority areas. Consequently, training to support students with attendance and behavior issues will now be provided district-wide to all staff.
Metrics for Monitoring Impact: To fulfill the LREBG statutory requirement of monitoring the impact of funded actions, BUSD will measure the effectiveness of this professional development expansion (Goal 1, Action 9) using the following metrics over the 26-27 and 27-28 school years:
Academic Progress: Percentage of Students with Disabilities, Low-Income students, and English Learners scoring "Meets or Exceeds Standards" on the ELA and Math CAASPP.
LTEL Progress: English Learner Reclassification Rate and progress toward English proficiency on the ELPAC.
Behavior and Climate: District-wide Chronic Absenteeism Rates and Suspension Rates.
These metrics, in addition to the existing metrics identified to measure the success of our professional development programs, will be incorporated to review the overall success of Action 9 as well as the expansion of this effort with LREBG Funds.

Reflections: Technical Assistance

As applicable, a summary of the work underway as part of technical assistance.

Although Burbank Unified is not eligible for Year 1 Differentiated Assistance under the 2025 California Dashboard, the district is eligible for Year 2 Differentiated Assistance support under the 2024 California Dashboard. Specifically, the district is eligible for support for the following student group: Long-Term English Learners (LTELs) in ELA & Math (Priority #4) and LTELs in Chronic Absenteeism and Suspension Rate (Priority #6).

As part of receiving technical assistance, Burbank Unified has engaged in purposeful planning to address these dashboard indicators and better support our LTEL students. The district is taking the following strategic actions:
Targeted Supplemental Curriculum: We are purchasing a new, specialized supplemental curriculum explicitly designed for our English Language Development (ELD) courses.
Vertical Articulation and Sequencing: This new curriculum provides a vertically articulated, sequential learning pathway designed to guide students more effectively through the language acquisition process.

Accelerating Academic Achievement (Priority #4): By strategically supplementing our existing core English Language Arts (ELA) instruction, this curriculum provides LTELs with greater opportunities to progress toward reclassification. It ensures they are equipped with the foundational skills necessary to be successful in transitional and mainstream ELA classrooms.

Improving Engagement and School Climate (Priority #6): Providing curriculum that is accessible, sequentially supportive, and highly relevant increases student academic confidence and engagement. This targeted academic support acts as a critical lever in reducing frustration-driven behavioral incidents (suspensions) and increasing overall

school connectedness (reducing chronic absenteeism).

Implementation and LCAP Alignment To ensure the successful rollout of this new curriculum in the 2026–2027 school year, the district will strategically leverage existing LCAP actions to provide comprehensive support:
Professional Development (Action 1.9): This action will directly support implementation by providing dedicated professional development opportunities for staff to master the new supplemental curriculum.

Instructional Assistant Support (Actions 1.3 and 1.19): This rollout is highly coordinated with our existing actions funding ELD Instructional Assistants at both the elementary (Action 1.3) and secondary (Action 1.19) levels. Both certificated staff and instructional aides will be trained on the new supplemental materials. This ensures that the curriculum can be seamlessly and effectively utilized not only in designated ELD classrooms but also in general education classrooms that contain clusters of English Learner students.

Comprehensive Support and Improvement

An LEA with a school or schools eligible for comprehensive support and improvement must respond to the following prompts.

Schools Identified

A list of the schools in the LEA that are eligible for comprehensive support and improvement.

NA

Support for Identified Schools

A description of how the LEA has or will support its eligible schools in developing comprehensive support and improvement plans.

NA

Monitoring and Evaluating Effectiveness

A description of how the LEA will monitor and evaluate the plan to support student and school improvement.

NA

Engaging Educational Partners

A summary of the process used to engage educational partners in the development of the LCAP.

School districts and county offices of education must, at a minimum, consult with teachers, principals, administrators, other school personnel, local bargaining units, parents, and students in the development of the LCAP.

Charter schools must, at a minimum, consult with teachers, principals, administrators, other school personnel, parents, and students in the development of the LCAP.

An LEA receiving Equity Multiplier funds must also consult with educational partners at schools generating Equity Multiplier funds in the development of the LCAP, specifically, in the development of the required focus goal for each applicable school.

Educational Partner(s)	Process for Engagement
Burbank Community	Website, Newsletters, Public Meetings, Recordings of Public Meetings, Presentation Materials, and Translation of meetings and materials. September 25, October 23, & December 4, 2025; January 29 and February 26, 2026: DELAC LCAP Presentations & Discussions December 10, 2025: PAC LCAP Overview & Budget Update January 14, 2026: Superintendent's Budget Advisory Committee January 20, 2026: Superintendent's Budget Advisory Committee January 21, 2026: PAC LCAP Goals & Metrics January 27, 2026: Superintendent's Budget Advisory Committee February 3, 2026: Superintendent's Budget Advisory Committee February 10, 2026: Superintendent's Budget Advisory Committee February 11, 2026: PAC LCAP Budget Update February 12, 2026: Board of Education Mid-Year Update February 23, 2026: Superintendent's Budget Advisory Committee
Burbank Unified Parents of Students	Website, Newsletters, Public Meetings, Survey, Recordings of Public Meetings, Presentation Materials, and Translation of meetings and materials. September 25, October 23, & December 4, 2025; January 29 and February 26, 2026: DELAC LCAP Presentations & Discussions December 10, 2025: PAC LCAP Overview & Budget Update January 14, 2026: Superintendent's Budget Advisory Committee January 20, 2026: Superintendent's Budget Advisory Committee January 21, 2026: PAC LCAP Goals & Metrics January 27, 2026: Superintendent's Budget Advisory Committee February 3, 2026: Superintendent's Budget Advisory Committee February 10, 2026: Superintendent's Budget Advisory Committee February 11, 2026: PAC LCAP Budget Update February 12, 2026: Board of Education Mid-Year Update February 23, 2026: Superintendent's Budget Advisory Committee
Burbank Unified Teachers	Website, Newsletters, Public Meetings, Survey, Recordings of Public Meetings, Presentation Materials, and Translation of meetings and materials. September 25, October 23, & December 4, 2025; January 29 and February 26, 2026: DELAC LCAP Presentations & Discussions January 14, 2026: Superintendent's Budget Advisory Committee January 20, 2026: Superintendent's Budget Advisory Committee January 27, 2026: Superintendent's Budget Advisory Committee February 3, 2026: Superintendent's Budget Advisory Committee February 10, 2026: Superintendent's Budget Advisory Committee February 23, 2026: Superintendent's Budget Advisory Committee April 27, 2026: Superintendent's Budget Advisory Committee
Burbank Unified Students	Website, Newsletters, Public Meetings, Survey, Recordings of Public Meetings, Presentation Materials, and Translation of meetings and

	materials. Key presentation and review dates included: January 14, 2026: Superintendent's Budget Advisory Committee January 20, 2026: Superintendent's Budget Advisory Committee January 27, 2026: Superintendent's Budget Advisory Committee February 3, 2026: Superintendent's Budget Advisory Committee February 10, 2026: Superintendent's Budget Advisory Committee February 23, 2026: Superintendent's Budget Advisory Committee April 27, 2026: Superintendent's Budget Advisory Committee
Burbank Unified Staff	Website, Newsletters, Public Meetings, Survey, Recordings of Public Meetings, Presentation Materials, and Translation of meetings and materials. Key presentation and review dates included: January 14, 2026: Superintendent's Budget Advisory Committee January 20, 2026: Superintendent's Budget Advisory Committee January 27, 2026: Superintendent's Budget Advisory Committee February 3, 2026: Superintendent's Budget Advisory Committee February 10, 2026: Superintendent's Budget Advisory Committee February 23, 2026: Superintendent's Budget Advisory Committee April 27, 2026: Superintendent's Budget Advisory Committee
Burbank Unified Bargaining Units	Individual Meeting with Superintendent and district leadership, Website, Newsletters, Public Meetings, Survey, Recordings of Public Meetings, Presentation Materials, and Translation of meetings and materials. Key presentation and review dates included: January 14, 2026: Superintendent's Budget Advisory Committee January 20, 2026: Superintendent's Budget Advisory Committee January 27, 2026: Superintendent's Budget Advisory Committee February 3, 2026: Superintendent's Budget Advisory Committee February 10, 2026: Superintendent's Budget Advisory Committee February 23, 2026: Superintendent's Budget Advisory Committee April 27, 2026: Superintendent's Budget Advisory Committee
Burbank Unified Principals	Regular Meetings with Superintendent and district leadership, Website, Newsletters, Public Meetings, Survey, Recordings of Public Meetings, Presentation Materials, and Translation of meetings and materials. Principal Meetings are held on the first (Elementary), third (Secondary), and fourth (All Principals) Wednesday of every month.
District English Learner Advisory Committee (DELAC)	Presentations and an agenda item at all calendared DELAC Meetings. Website, Newsletters, Public Meetings, Survey, Recordings of Public Meetings, Presentation Materials, and Translation of meetings and materials.

	Key presentation and review dates included: September 25, October 23, & December 4, 2025; January 29 and February 26, 2026: DELAC LCAP Presentations & Discussions
District Administrative Leadership (Cabinet)	Regular Meetings with Superintendent and district leadership, Website, Newsletters, Public Meetings, Recordings of Public Meetings, Presentation Materials, and Translation District Cabinet meets weekly on Tuesday mornings.
Consultation with the SELPA	Provided a copy of plan and accompanying presentations. Responded in writing to feedback. May - June 2026
ASB Student Representatives	Website, Newsletters, Public Meetings, Survey, Recordings of Public Meetings, Presentation Materials, and Translation of meetings and materials.
Superintendent's Budget Advisory Committee	Meetings, Agendas, Emails, and presentations Key presentation and review dates included: January 14, 2026: Superintendent’s Budget Advisory Committee January 20, 2026: Superintendent’s Budget Advisory Committee January 27, 2026: Superintendent’s Budget Advisory Committee February 3, 2026: Superintendent’s Budget Advisory Committee February 10, 2026: Superintendent’s Budget Advisory Committee February 23, 2026: Superintendent’s Budget Advisory Committee April 27, 2026: Superintendent’s Budget Advisory Committee

A description of how the adopted LCAP was influenced by the feedback provided by educational partners.

Overview of the Engagement Process The Burbank Unified School District (BUSD) utilized an inclusive and collaborative approach to involve educational partners in the 2026-2027 LCAP adoption process. This comprehensive engagement strategy ensured that the LCAP was genuinely informed by representatives with a wide range of interests, ideas, and perspectives. Throughout the 2025-2026 school year, the District held numerous public meetings, including three general session LCAP Parent Advisory Group meetings, four District English Learner Advisory Committee (DELAC) meetings, and three public meetings with the Board of Education.
The engagement plan included multiple routes of communication to ensure broad participation. District staff consulted with local bargaining units (Burbank Teachers Association and the California State Employees Association), school site principals, certificated and classified personnel, and district administrators. To gather student perceptions and increase engagement, the LCAP budget and process were presented to the Associated Student Body (ASB) programs at both comprehensive high schools (John Burroughs High School and Burbank High School). Furthermore, the District held targeted discussions with parents of homeless children to better understand their specific needs, and the Superintendent presented the LCAP to the district PTA. Furthermore, SELPA reviewed the LCAP to ensure provisions for Special Needs Students were accurately reflected, with suggestions memorialized before the first reading.
Transparency and Accessibility To foster a democratic and transparent process, all general session LCAP meetings were live-streamed via Zoom and recorded. These recordings, along with all presentations, budget documents, and handouts, were archived on the BUSD website. To ensure accessibility for all families, including those who could not attend live meetings, materials were translated into Spanish and Armenian. Questions and answers from these sessions were provided both live and in writing, and posted publicly online.
Meeting dates and materials were advertised extensively via the District’s website, BUSD eNEWS notifications, electronic invitations sent to the entire school community (staff, parents, and high school students), and regular communications from site principals.
Advisory Groups and Meeting Timeline The District’s LCAP Parent Advisory Groups—the General Public LCAP Advisory Group and the DELAC— met eight times during the 2025-2026 school year. Participants included parents of English Language Learners, Socioeconomically Disadvantaged students, Reclassified English Learners, Foster Youth, and GATE students, representing a diverse range of ethnic, racial, and unduplicated student subgroups.

Key presentation and review dates included:
September 25, October 23, & December 4, 2025; January 29 and February 26, 2026: DELAC LCAP Presentations & Discussions
December 10, 2025: PAC LCAP Overview & Budget Update
January 14, 2026: Superintendent's Budget Advisory Committee
January 20, 2026: Superintendent's Budget Advisory Committee
January 21, 2026: PAC LCAP Goals & Metrics
January 27, 2026: Superintendent's Budget Advisory Committee
February 3, 2026: Superintendent's Budget Advisory Committee
February 10, 2026: Superintendent's Budget Advisory Committee
February 11, 2026: PAC LCAP Budget Update
February 12, 2026: Board of Education Mid-Year Update
February 23, 2026: Superintendent's Budget Advisory Committee
April 27, 2026: Superintendent's Budget Advisory Committee
June 4, 2026: First Reading of the LCAP (Public Hearing)
June 25, 2026: Second Reading and Formal LCAP Adoption
At each meeting, detailed qualitative and quantitative data were provided. This allowed partners to analyze the extent to which existing services and budgets were effectively meeting the needs of targeted student groups.
Influence of Feedback on the Adopted LCAP Educational partner feedback fundamentally shaped the development, priorities, and budget allocations of the 2026-2027 LCAP. The timely provision of data allowed partners to evaluate program efficacy and advocate for necessary adjustments, fostering a strong sense of trust and distributed leadership. A primary theme that emerged from educational partner feedback was the support for increases and improved services for BUSD's growing English Learner population, as well as the commitment made to bolster site-level behavioral and wellness interventions. Based on collaborative analysis and consensus among the advisory groups, the District maintained its four original goals but made significant reallocations to the supplemental budget to directly reflect community priorities.
Actions Removed or Reduced Based on the 25-26 Plan: Focus was put on evaluating the changes made for the 2025-26 school year and the effectiveness of those changes in the LCAP:
Secondary Summer School
Hanover Research Group Work
DEI Consultant
Elementary Curriculum Specialists (2.0 FTE)
Elementary Intervention Specialists (11.0 FTE)
Elementary Response to Intervention Funds
Interpretation Services/Translator Funds
DEI Collaboration Time for School Leads
ELD Instructional Supports for Staff and Materials (one-time)
Actions Added or Augmented in 25-26: Additional support was given in 25-26 to support student wellness, behavioral needs, and experiential learning:
Addition of Elementary Assistant Principals (2.0 FTE)
Addition of Elementary Wellness & Behavior Specialists (3.0 FTE)
Addition of Elementary Behavior Interventionists (7.0 FTE)
Funding support for the Outdoor Science School
Through comprehensive meetings, discussions, and presentations with a wide variety of educational partners, Burbank Unified School District engaged in a thorough evaluation of all actions within the LCAP. Particular focus was placed on assessing the major programmatic and budgetary changes implemented during the 2025-2026 school year to determine their overall effectiveness and their specific contribution toward increasing and improving services for our identified student populations. Based on this collaborative review, the determination was that these recent changes have been successful and are working as anticipated to support student needs. Consequently, educational partners agreed to "stay the course" with the current actions and budget allocations for the 2026-2027 school year. The District and its partners will conduct a more detailed and exhaustive re-evaluation of all initiatives during the 2026-2027 school year to chart the course for the upcoming new three-year LCAP cycle. Ultimately, this inclusive, data-informed dialogue culminated in a 2026-2027 LCAP that was fully supported by the Board of Education and formally approved on June 25, 2026.

Goals and Actions

Goal

Goal #	Description	Type of Goal
1	Students will be career/college ready via high-quality instruction of State Standards as measured by State, federal, and District assessment tools including the California Dashboard. (Instrucitonal Services) State of California Priorities: Priority One: Basic (Conditions of Learning) Priority Two: State Standards (Conditions of Learning) Priority Three: Parental Involvement (Engagement) Priority Four: Pupil Achievement (Pupil Outcomes) Priority Five: Pupil Engagement (Engagement) Priority Seven: Course Access (Conditions of Learning)	Broad Goal

State priorities addressed by this goal.

2, 1, 4, 5, 7, 3

An explanation of why the LEA has developed this goal.

The goal of BUSD is to provide the highest quality instruction of the California State Standards that leads students to success in career choices and college readiness.

Goal 1 was established based on multiple sources of data: CAASPP scores, California Dashboard indicators, graduation data (district data and Dashboard data), A through G completion rates.

The intention of creating this goal is to ensure that students are given State Standards driven curriculum and that teachers are properly trained in order to effectively deliver instruction in an appropriate manner. Additionally, it is important for the District to provide access to the curriculum for all learners.

Goal 1 focuses on English Learners, Foster Youth, Homeless and Students with Disabilities, and students who are gifted. The targeted subgroups need access to appropriate materials, access to courses and curriculum, the highest quality instruction, and access to interventions and support including not only academic but social-emotional. Similarly, these targeted subgroups will benefit from smaller class size environments when appropriate. Goal 1 is designed to meet these needs of the targeted subgroups, with the understanding that the school district will monitor the following areas to evaluate progress towards goals:

Reclassification rates ELPAC results for English Learners
CAASPP Data for ELs, SEDs, SWDs, Foster Youth, Homeless Students, and Hispanic Students
Graduation Rates for ELs, SEDs, SWDs, Foster Youth, Homeless Students, and Hispanic Students

The reason the goal was established is based on data. Graduation data is good district-wide, but there are discrepancies with subgroup data, which needs attention. The current Dashboard shows gaps in performance for ELs and SED students, despite a relatively good score overall. Similarly, we have seen the same gap in A through G completion and CAASPP data. Part of the impetus for this goal was also to ensure that these subgroups were receiving full access to courses and curriculum. More importantly, instructional materials needed to be appropriate for these groups.

The goal addresses good first teaching. When students are not being successful, the goal addresses Response to Intervention at the elementary level and intervention sections at the secondary level. Additionally, the goal addresses a robust design for students to have opportunities in the summer for elementary reteaching and expansion of knowledge and in secondary credit recovery. There are also opportunities for students to maintain their skill level during the summer so they are not losing their academic skills.

As a school of choice, the Independent Learning Academy (ILA) is an opportunity for students to access core classes on APEX Learning, which is an online platform. This allows students more flexible schedules to pursue other goals such as the Junior Olympics, or acting and modeling careers. In some cases, the ILA has been an opportunity for students to engage in their academic learning online because they suffer from various phobias or social disorders.

The focus for Burbank Unified is good first instruction. Therefore, the intention of this goal is to ensure the students in Burbank encounter a curriculum and materials that are aligned with State Standards. It is also important for instruction to be differentiated so that student's needs are being met. Therefore, professional development becomes critical to ensure the most effective delivery of instruction, appropriate methods for checking for understanding, and methods of reteaching differently to meet the needs of students who did not get it the first time.

A focus for this goal includes technology. Not just access to more technology, but the integration of technology into lesson plans that will engage students in the learning process. Similarly, the district continues to endorse Kagan strategies and offers teachers many point of access to be trained during the regular school year.

Goal 1 focuses on:

- Mastery of State Standards
- Professional development for Kagan Classroom technology training
- Professional development time to ensure assessments and lessons are standards aligned
- Google classroom
- Core curriculum online resources

Access to arts and music education is a passion in Burbank. Goal 1 is intended to keep our district focused on our commitment to art and music education and to maintain services that are already currently in place while creating a plan to expand further. Over the last couple of years, the District has created a strategic master plan for art and music education which is captured in the Burbank Arts for All Master Plan.

The following items are paramount to goal 1:

- Maintain current ratios of students to teachers for music instruction in grades 2 through 5
- Maintain 1600 instructional minutes per year in music instruction for a student in grades 4 and 5
- Maintain 1200 instructional minutes per year of music instruction for students in grades 2 and 3
- Continue to increase the number of visual and performing arts courses offered in grades 9 through 12

In summary, Goal 1 is designed to meet all these needs, with the understanding that the school district will monitor the following areas to evaluate progress toward meeting the action items:

CAASPP data for All Students and Subgroups
Graduation data for All Students and Subgroups
Dropout Rate for High School Students
A through G data AP data for High School Students
D and F Rates for Middle and High School Students
Credit recovery data for High School Students
Teacher Credentialing and Appropriate Assignments (Williams Compliance)
Textbooks and Instructional Materials (Williams Compliance)

Measuring and Reporting Results

Metric #	Metric	Baseline	Year 1 Outcome	Year 2 Outcome	Target for Year 3 Outcome	Current Difference from Baseline
1	Percent of All Students who score Exceeds or Meet Standards on the English Language Arts CAASPP will increase by 3 percentage points over 3 years	In 2022-2023, 58.43% of All Students scored Exceeds or Meets Standards on the English Language Arts CAASPP	In 2023-2024, 56.38% of All Students scored Exceeds or Meets Standards on the English Language Arts CAASPP	In 2024-2025, 58.02% of All Students scored Exceeds or Meets Standards on the ELA CAASPP. 51.94% in 3rd Grade for ELA is now also being monitored as 3rd-grade literacy proficiency is a new/additoinal instructional goal.	All Students who Exceed or Meet Standards on the English Language Arts CAASPP will increase by 3 percentage points by year 3.	The percentage of all students who scored Exceed or Meet Standards on the English Language Arts CAASPP declined by 0.41%.

2	Percent of English Learners Exceeding or Meeting Standards on English Language Arts CAASPP will increase by 3 percentage points over 3 years	In 2022-2023, 13.41% of English Learners scored Exceeds or Meets Standards on the English Language Arts CAASPP. 8.11% of Long-Term English Learners Met or Exceeded Standard on the English Language Arts CAASPP	In 2023-2024, 14.09% of English Learners scored Exceeds or Meets Standards on the English Language Arts CAASPP 2.0% of Long-Term English Learners Met or Exceeded Standard on the English Language Arts CAASPP	In 2024-2025, 15.99% of English Learners scored Exceeds or Meets Standards on the English Language Arts CAASPP 13.21% of Long-Term English Learners Met or Exceeded Standard on the English Language Arts CAASPP.	English Learners scoring Exceeds or Meets Expectations on the English Language Arts CAASPP will increase by 3 percentage points by year 3.	The percentage of English Learners who scored Exceed or Meet Standards on the English Language Arts CAASPP increased by 2.58%. The percentage of Long-Term English Learners who scored Exceed or Meet Standards on the English Language Arts CAASPP increased by 5.1%.
3	Percent of Socioeconomically Disadvantaged Students Exceeding or Meeting Standards on the English Language Arts CAASPP will increase by 3 percentage points over 3 years	In 2202-20223, 47.15% of Socioeconomically Disadvantaged scored Exceeds or Meets Standards on the English Language Arts CAASPP.	In 2023-2024, 43.15% of Socioeconomically Disadvantaged scored Exceeds or Meets Standards on the English Language Arts CAASPP.	In 2024-2025, 43.82% of Socioeconomically Disadvantaged scored Exceeds or Meets Standards on the ELA CAASPP. 38.34% in 3rd Grade for ELA (Added based on the introduction of district instructional goals).	Socioeconomically Disadvantaged students who score Exceeds or Meets Standards on English Language Arts CAASPP will increase by 3 percentage points by year 3.	The percentage of Socioeconomically Disadvantaged students who scored Exceed or Meet Standards on the English Language Arts CAASPP declined by 3.33%.

4	Percent of Homeless Students Exceeding or Meeting Standards on the English Language Arts CAASPP will increase by 3 percentage points over 3 years	In 2022-2023, 42.86% of Homeless Students scored Exceeds or Meets Standards on the ELA CAASPP	In 2023-2024, 25.00% of Homeless Students scored Exceeds or Meets Standards on the ELA CAASPP	In 2024-2025, 45.16% of Homeless Students scored Exceeds or Meets Standards on the ELA CAASPP	Homeless Students scoring Exceeds or Meets Expectations on the English Language Arts CAASPP will increase by 3 percentage points by year 3.	The percentage of students experiencing homelessness who scored Exceed or Meet Standards on the English Language Arts CAASPP increased by 2.3%.
5	Percent of Foster Youth Students who score Exceeds or Meets Standards on the Mathematics CAASPP will increase by 3 percentage points over 3 years	In 2022-2023, NA% of Foster Students scored Exceeds or Meets Standards on the English Language Arts CAASPP	In 2023-2024, NA% of Foster Students scored Exceeds or Meets Standards on the English Language Arts CAASPP	In 2024-2025, NA% of Foster Students scored Exceeds or Meets Standards on the English Language Arts CAASPP	Foster students scoring Exceeds or Meets Expectations on the English Language Arts CAASPP will increase by 3 percentage points by year 3.	The percentage of students in foster care who scored Exceed or Meet Standards on the English Language Arts CAASPP had no change.

6	Percent of Students with Disabilities Exceeding or Meeting Standards on the English Language Arts CAASPP will increase by 3 percentage points over 3 years	In 2022-2023, 27.31% of Students with Disabilities scored Exceeds or Meets Standards on the English Language Arts CAASPP	In 2023-2024, 25.62% of Students with Disabilities scored Exceeds or Meets Standards on the English Language Arts CAASPP	In 2024-2025, 23.47% of Students with Disabilities scored Exceeds or Meets Standards on the English Language Arts CAASPP	Students with Disabilities who exceed or meet standards on the English Language Arts CAASPP will increase by 3 percentage points by year 3.	The percentage of students with Disabilities who scored Exceed or Meet Standards on the English Language Arts CAASPP declined by 3.84%.
7	Percent of Hispanic students Exceeding or Meeting Standards on the English Language Arts CAASPP will increase by 3 percentage points over 3 years	In 2022-2023, 47.49% of Hispanic students scored Exceeds or Meets Standards on the English Language Arts CAASPP	In 2023-2024, 46.64% of Hispanic students scored Exceeds or Meets Standards on the English Language Arts CAASPP	In 2024-2025, 48.15% of Hispanic students scored Exceeds or Meets Standards on the English Language Arts CAASPP	Hispanic students who meet Exceed or Meet Standards on the English Language Arts CAASPP will increase by 3 percentage points over 3 years.	The percentage of Hispanic students who scored Exceed or Meet Standards on the English Language Arts CAASPP increased by 0.66%.

8	Percent of Twice Exceptional (GATE & UDP) students Exceeding or Meeting Standards on the English Language Arts CAASPP will increase by 3 percentage points over 3 years	In 2022-2023, 93.8% of Twice Exceptional studentss scored Exceeds or Meets Standards on the English Language Arts CAASPP	In 2023-2024, 91.0% of Twice Exceptional students scored Exceeds or Meets Standards on the English Language Arts CAASPP	In 2024-2025, 90.0% of Twice Exceptional students scored Exceeds or Meets Standards on the English Language Arts CAASPP	Twice Exceptional (GATE & UDP) students who Exceed or Meet Standards on the English Language Arts CAASPP will increase by 3 percentage points by year 3.	The percentage of Twice Exceptional students who scored Exceed or Meet Standards on the English Language Arts CAASPP declined by 3.8%.
9	Percent of All Students who score Exceeds or Meets Standards on the Mathematics CAASPP will increase by 3 percentage points over 3 years	In 2022-2023, 44.40% of All Students scored Exceeds or Meets Standards on the Mathematics CAASPP	In 2023-2024, 43.46% of All Students scored Exceeds or Meets Standards on the Mathematics CAASPP	In 2024-2025, 46.56% of All Students scored Exceeds or Meets Standards on the Mathematics CAASPP. Grade 6 – 42.97%; Grade 7 – 45.82%; Grade 8 - 41.57% Grade-level proficiency in MS Math is being closely monitored as it is a new/additional instructional goal.	All Students who Exceed or Meet Standards on the Mathematics CAASPP will increase by 3 percentage points by year 3.	The percentage of All students who scored Exceed or Meet Standards on the Mathematics CAASPP increased by 2.16%.

10	Percent of English Learners who score Exceed and Meet Standards of the Math CAASPP will increase by 3 percentage points over 3 years	In 2022-2023, 15.14% of English Learner students scored Exceed and Meet Standards of the Math CAASPP 1.3% of Long-Term English Learner students scored Exceed and Meet Standards of the Math CAASPP	In 2023-2024, 16.57% of English Learner students scored Exceed and Meet Standards of the Math CAASPP 0.0% of Long-Term English Learner students scored Exceed and Meet Standards of the Math CAASPP	In 2024-2025, 21.41% of English Learner students scored Exceed and Meet Standards of the Math CAASPP 1.89% of Long-Term English Learner students scored Exceed and Meet Standards of the Math CAASPP	English Learners who Exceed or Meet Standards on the Math CAASPP will increase by 3 percentage points by year 3.	The percentage of English Learner students who scored Exceed or Meet Standards on the Mathematics CAASPP increased by 6.27%. The percentage of Long-Term English Learner students who scored Exceed or Meet Standards on the Mathematics CAASPP increased by 0.59%.
11	Percent of Socioeconomically Disadvantaged Students Exceeding or Meeting Standards on Math CAASPP will increase by 3 percentage points over 3 years	In 2022-2023, 19.06% of Socioeconomically Disadvantaged Students scored exceeds or Meets standards on the Mathematics CAASPP	In 2023-2024, 31.26% of Socioeconomically Disadvantaged Students scored Exceeds or Meets Standards on the Math CAASPP (The previous year/baseline was 32.74% for Socioeconomically Disadvantaged Students (22-23).	In 2024-2025, 33.74% of Socioeconomically Disadvantaged Students scored Exceeds or Meets Standards on the Math CAASPP; Grade 6 – 28.58%; Grade 7 – 35.70%; Grade 8 – 25.00% Grade-level proficiency in MS Math is being closely monitored as it is a new/additional instructional goal.	Socioeconomically Disadvantaged Students who exceed or meet standards on the Mathematics CAASPP will increase by 3 percentage points by year 3.	The percentage of Socioeconomically Disadvantaged students who scored Exceed or Meet Standards on the Mathematics CAASPP increased by 14.68%.

12	Percent of Homeless Students Exceeding or Meeting Standards on the Mathematics CAASPP will increase by 3 percentage points over 3 years	In 2022-2023, 28.58% of Homeless Students scored Exceeds or Meets Standards on the Mathematics CAASPP	In 2023-2024, 39.28% of Homeless Students scored Exceeds or Meets Standards on the Mathematics CAASPP	In 2024-2025, 35.48% of Homeless Students scored Exceeds or Meets Standards on the Mathematics CAASPP	Homeless Students Exceeding or Meeting Standards on the Mathematics CAASPP will increase by 3 percentage points by year 3.	The percentage of students experiencing homelessness who scored Exceed or Meet Standards on the Mathematics CAASPP increased by 6.9%.
13	Percent of Foster Youth Students who score Exceeds or Meets Standards on the Mathematics CAASPP will increase by 3 percentage points over 3 years	In 2022-2023, NA% of Foster Students scored Exceeds or Meets Standards on the Mathematics CAASPP	In 2023-2024, NA% of Foster Students scored Exceeds or Meets Standards on the Mathematics CAASPP	In 2024-2025, NA% of Foster Students scored Exceeds or Meets Standards on the Mathematics CAASPP	Foster Youth Students who score Exceeds or Meets Standards on the Mathematics CAASPP will increase by 3 percentage points by year 3.	The percentage of students in foster care who scored Exceed or Meet Standards on the Mathematics CAASPP remained unchanged.
14	Percent of Students with Disabilities that Exceed or Meet Standards on the Mathematics CAASPP will increase by 3 percentage points over 3 years	In 2022-2023, 19.06% of Students with Disabilities scored exceeds or Meets standards on the Mathematics CAASPP	In 2023-2024, 20.89% of Students with Disabilities scored exceeds or Meets standards on the Mathematics CAASPP	In 2024-2025, 20.00% of Students with Disabilities scored exceeds or Meets standards on the Mathematics CAASPP	Students with Disabilities that Exceed or Meet Standards on the Mathematics CAASPP will increase by 3 percentage points by year 3.	The percentage of students with disabilities who scored Exceed or Meet Standards on the Mathematics CAASPP increased by 0.94%.

15	Percent of Hispanic students who Exceed or Meet Standards on the Mathematics CAASPP will increase by percentage points over 3 years	In 2022-2023 30.18% of Hispanic students scored Exceeds or Meets Standards on the Mathematics CAASPP	In 2023-2024, 30.12% of Hispanic students scored Exceeds or Meets Standards on the Mathematics CAASPP	In 2024-2025, 32.51% of Hispanic students scored Exceeds or Meets Standards on the Mathematics CAASPP	The percent of Hispanic students who meet Exceed or Meet Standards on the Mathematics CAASPP will increase by 3 percentage points by year 3.	The percentage of Hispanic students who scored Exceed or Meet Standards on the Mathematics CAASPP increased by 2.33%.
16	Percent of Twice Exceptional (GATE & UDP) students who score Exceeds or Meets Standards on the Mathematics CAASPP will increase by 3 percentage points over 3 years.	In 2022-2023, 91.4% Twice Exceptional students scored Exceeds or Meets Standards on the Mathematics CAASPP	In 2023-2024, 90.0% of Twice Exceptional students scored Exceeds or Meets Standards on the Mathematics CAASPP	In 2024-2025, 91.0% of Twice Exceptional students scored Exceeds or Meets Standards on the Mathematics CAASPP	Twice Exceptional (GATE & UDP) students who Exceed or Meet Standards on the Mathematics CAASPP will increase by 3 percentage points by year 3.	The percentage of twice exceptional students who scored Exceed or Meet Standards on the Mathematics CAASPP declined by 0.4%.

17	Percent of English Learners making progress towards English language proficiency as reported on the California Dashboard will increase by 3 percentage points over 3 years	In 2022-2023, 57.7% of English Learners making progress towards English language proficiency as reported on the California Dashboard	In 2023-2024, 59.4% of English Learners made progress towards English language proficiency as reported on the California Dashboard 52.2% of Long-Term English Learners are making progress towards English language proficiency as reported on the California Dashboard	In 2024-2025, 58.8% of English Learners made progress towards English language proficiency as reported on the California Dashboard 46.2% of Long-Term English Learners are making progress towards English language proficiency as reported on the California Dashboard	English Learners making Progress on the ELPAC will increase by 3 percentage points by year 3.	English Learners making progress towards English language proficiency increased by 1.1% Long-Term English Learners making progress towards English language proficiency decreased by 6.0%
18	Percent of English Learners being reclassified as determined by the Reclassification Rate will meet or exceed previous annual rate or at least pass the State reclassification rate	In 2022-2023, 20.7% of English Learners were reclassified	In 2023-2024, 12.67% of English Learners were reclassified	In 2024-2025, 13.7% of English Learners were reclassified	Maintain or increase the reclassification rate of English Learners.	The percentage of English Learners who were reclassified decreased by 7.0%

19	Percent of fully credential teachers in grades Transitional Kindergarten through Grade 12 will be maintained	In 2021-2022, the following was reported on the CDE TAMO Report: Clear - 88.7% Out-of-Field - 2.7% Intern - 0.5% Ineffective - 1.7% Incomplete - 6.1% Unknown - 0.3% In 2022-2023, BUSD anticipates having 42 Out-of-Field Teacher (Local Assignment Approval by Board), 5 Ineffective Teacher (emergency permit, waiver), 29 Inexperienced Teacher (2 years or less)	In 2022-2023, the following was reported on the CDE TAMO Report: Clear - 87.5%; Out-of-Field - 3.7%; Intern - 0.6%; Ineffective - 4.6%; Incomplete - 3.5%; Unknown - 0.1%	In 2023-2024, the following was reported on the CDE TAMO Report: Clear - 83.8%; Out-of-Field - 4.3%; Intern - 1.0%; Ineffective - 6.8%; Incomplete - 4.1%; Unknown - 0.0%	Maintain or increase percentage of teachers who are fully credentialed per teaching assignment	The percentage of fully credentialed teachers in grades Transitional Kindergarten through Grade 12 decreased by 4.9%. Out-of-Field increased by 1.6%. Intern increased by 0.5%. Ineffective increased by 5.1%. Incomplete decreased by 2.0%. Unkown decreased by 0.3%.
20	Graduation Rate for All Students will increase by 1 percentage point over 3 years as reported on the California Dashboard.	In 2022-2023 93.2% of All Students were graduated from high school	In 2023-2024, the District-wide graduation rate was 96.3% for all students.	In 2024-2025, the District-wide graduation rate was 97.4% for all students.	All Students who are graduated from high school will increase by 1 percentage point by year 3.	The District-wide graduation rate for all students increased by 4.2%

21	Graduation Rate of English Learners will increase by 3 percentage points over 3 years as reported on the California Dashboard.	In 2022-2023, 80.6% of English Learners were graduated from high school	In 2023-2024, 91.3% of English Learners graduated	In 2024-2025, 95.6% of English Learners graduated	All English Learners who are graduated from high school will increase by 3 percentage points by year 3.	The graduation rate of English Learners increased by 15.0%
22	Graduation Rate of Socio-Economically Disadvantaged Students will increase by 2 percentage points over 3 years as reported on the California Dashboard.	In 2022-2023, 91.0% of Socio-economically Disadvantaged Students were graduated from high school	In 2023-2024, 95.1% of Socio-economically Disadvantaged Students graduated	In 2024-2025, 95.5% of Socio-economically Disadvantaged Students graduated	Socio-economically Disadvantaged Students who are graduated from high school will increase by 2 percentage points by year 3.	The graduation rate of Socio-Economically Disadvantaged Students increased by 4.5%
23	Graduation Rate for Homeless Students will increase by 1 percentage points over 3 years as reported on the California Dashboard.	In 2022-2023, 90.9% of Homeless Students were graduated from high school	In 2023-2024, 85.2% of Homeless Students graduated	In 2024-2025, 95.2% of Homeless Students graduated	Homeless Students who are graduated from high school will increase by 1 percentage point by year 3.	The graduation rate for Homeless Students increased by 4.3%

24	Graduation Rate for Foster Youth will increase by 1 percentage point over 3 years as reported on the California Dashboard.	In 2022-2023 NA% of Foster Youth were graduated from high school (Subgroup too small to report)	In 2023-2024 NA% of Foster Youth graduated	In 2024-2025 NA% of Foster Youth graduated from high school (Subgroup too small to report)	Foster Youth who are graduated from high school will increase by 1 percentage point by year 3.	The graduation rate for Foster Youth remains unchanged.
25	Graduation Rate for Students with Disabilities will increase by 2 percentage points over 3 years as reported on the California Dashboard.	In 2022-2023, 88.3% of Students with Disabilities were graduated from high school	In 2023-2024, 88.3% of Students with Disabilities graduated	In 2024-2025, 89.8% of Students with Disabilities graduated	Students with Disabilities who are graduated from high school will increase by 2 percentage points by year 3.	The graduation rate for Students with Disabilities increased by 1.5%
26	Graduation Rate for Hispanic Students will increase by 1 percentage point over 3 years as reported on the California Dashboard.	In 2022-2023, 94.0% of Hispanic Students were graduated from high school	In 2023-2024, 96.0% of Hispanic Students graduated	In 2024-2025, 97.0% of Hispanic Students graduated	Hispanic Students who are graduated from high school will increase by 1 percentage point by year 3.	The graduation rate for Hispanic Students increased by 3%

27	Percent of "D" and "F" Grade Rate in Middle School and High School will decrease by 3 percentage points over 3 years as reported through our student information system (AERIES).	Fall of 2023 - 7.7% of middle school grades were a "D" or "F" Spring of 2024 - 8.14% of middle school grades were a "D" or "F" Fall of 2023 - 11.2% of high school grades were a "D" or "F" Spring of 2024 - 12.05% of high school grades were a "D" or "F"	Fall of 2024 - 7.22% of middle school grades were a "D" or "F" Spring of 2025 - 8.29% of middle school grades were a "D" or "F" Fall of 2024 - 11.3% of high school grades were a "D" or "F" Spring of 2025 - 12.67% of high school grades were a "D" or "F"	Fall of 2025 - 6.63% of middle school grades were a "D" or "F" Spring of 2026 - 7.62% of middle school grades were a "D" or "F" Fall of 2025 - 10.21% of high school grades were a "D" or "F" Spring of 2026 - 11.72% of high school grades were a "D" or "F"	Middle school and high school students who earn a "D" or "F" grade in Spring and Fall will decrease by 3 percentage points by year 3.	Fall of 2024 - middle school "D" or "F" grades decreased by 1.07% Spring of 2025 - middle school "D" or "F" grades decreased by 0.52% Fall of 2024 - high school "D" or "F" grades decreased by 0.99% Spring of 2025 - high school "D" or "F" grades decreased by 0.33%
28	Drop-Out Rate will decrease or be maintained	In 2022-2023, the High School Drop- Out Rate was 1.4% (CDE no longer calculates the dropout rate; however, the District will calculate using a combination of our student information system and CALPADS).	In 2023-2024, the High School Drop- Out Rate was 1.01%	In 2024-2025, the High School Drop- Out Rate was 0.8%	Maintain or decrease the percent of students who Drop-Out of High School	The High School Drop-Out Rate decreased by 0.6%

29	Percentage of students completing the A-G requirements. The completion rate will increase by 2% percentage points per year until students reach the highest level of performance as reported on the California Dashboard.	In 2022-2023 48.0% of high school students met A-G completion rate	In 2023-2024 47.1% of high school students met A-G completion requirements	In 2024-2025, 49.2% of high school students met A-G completion requirements	All students who meet A-G requirements will increase by 6 percentage points by year 3.	The percentage of students completing the A-G requirements increased by 1.2%
30	Percentage of Secondary Student Credit Recovery Rate will increase by 1 percentage point over 3 years as reported through our student information system (AERIES).	In 2022-2023, the "Traditional" recovery rate of students was 92.8% In 2022-2023, online credit recovery was not offered.	In 2023-2024, the credit recovery rate of students was 96.4%	In 2024-2025, the credit recovery rate of students was 93.8%	Students who recover credits towards graduation either through traditional or online methods will increase by 1 percentage point by year 3.	The percentage of Secondary Student Credit Recovery Rate increased by 1.0%

31	Percent of Advanced Placement (AP) Examination Passing Rate with a "3" or better will increase by 2% percentage points annually until students reach the highest performance level as reported by the college board.	In 2022-2023, 76.8% of students on average pass the Advanced Placement Examination with a "3" or better	In 2023-2024, 81.2% of students on average pass the Advanced Placement Examination with a "3" or better	In 2024-2025, 85.3% of students on average pass the Advanced Placement Examination with a "3" or better	Students who pass the Advanced Placement Examination with a "3" or better will increase by 6 percentage points by year 3.	The percent of Advanced Placement (AP) Examination Passing Rate with a "3" or better increased by 8.5%
32	100% Compliance with the Williams Act Instructional Materials Requirement	100% Compliance with the Williams Act Instructional Materials Requirement in 2022-2023	100% Compliance with the Williams Act Instructional Materials Requirement in 2023-2024	100% Compliance with the Williams Act Instructional Materials Requirement in 2023-2024	100% Compliance with the Williams Act Instructional Materials Requirement	100% Compliance with the Williams Act Instructional Materials Requirement

33	Parent Participation in Decision-Making Groups: DELAC, LCAP Advisory Group, PTA Council Meetings (State Priority 3)	2023-2024 - 100% Compliance with DELAC, LCAP Advisory Group, and PTA Council participation increases	2024-2025 - 100% Compliance with DELAC, LCAP Advisory Group, and PTA Council participation	2025-26 - 100% Compliance with DELAC, LCAP Advisory Group, and PTA Council participation increases An increase in DELAC meetings by 3 to a total of 8 DELAC Meetings throughout the year. The LCAP Advisory group included the formation of the Superintendent's Budget Advisory Committee, a new committee this school year that met seven times in the spring of 2026 to discuss the LCAP budget. These were in addition to the three LCAP overview meetings. New meetings facilitated by the district brought an additional 20 educational partners to budgetary discussions.	100% Compliance with DELAC, LCAP Advisory Group, and PTA Council participation increases	100% Compliance with DELAC, LCAP Advisory Group, and PTA Council participation increases
34	Percent of students proficient in English Language Arts as Measured by District Assessment will increase by 3% over 3 years	In 2023-2024, 66% of Elementary students scored proficient on the I-Ready end-of-year reading assessment. In 2023-2024, 50% of Middle School students scored proficient on the I-Ready end-of-year reading assessment. In 2023-2024, 57% of High School students scored proficient on the spring District Writing Prompt.	In 2024-2025, 61% of Elementary students scored proficient on the I-Ready most recent reading assessment. In 2024-2025, 52.4% of Middle School students scored proficient on local reading assessments. In 2024-2025, 45.1% of High School students scored proficient on the District Writing Prompt.	In 2025-2026, 59.9% of Elementary students scored proficient on the most recent Star Reading assessment District Benchmark. In 2025-2026, 53.7% of Middle School students scored near standard, and 27.7% scored above standard on local reading assessments. In 2025-2026, 55.17% of High School students scored proficient on the District Writing Prompt.	All Students who are proficient in English Language Arts, as measured by District Assessments, will increase by 3 percentage points by year 3.	The percentage of Elementary students who scored proficient on the most recent reading assessment decreased by 6.1% The percentage of Middle School students who scored proficient on local reading assessments cannot be calculated in year 25-26, as a new assessment baseline has been established. The percentage of High School students who scored proficient on the District Writing Prompt decreased by 1.83%

35	Percent of students proficient in Mathematics as measured by District Assessment will increase by 3% over 3 years.	In 2023-2024, 58% of Elementary students scored proficient on the I-Ready end-of-year math assessment. In 2023-2024, 43% of Middle School students scored proficient on the I-Ready end-of-year math assessment. In 2023-2024, 41.1% of High School students scored proficient on the spring Math District Benchmark Assessments.	In 2024-2025, 62.8% of Elementary students scored proficient on the end-of-year math assessment. In 2024-2025, 59.81% of Middle School students scored proficient on the end-of-year math assessment. In 2024-2025, 44.02% of High School students scored proficient on the spring Math District Benchmark	In 2025-2026, 55.3% of Elementary students scored proficient on the end-of-year math assessment. In 2025-2026, 61.7% of Middle School students scored proficient on the end-of-year math assessment. In 2025-2026, 48.3% of High School students scored proficient on the spring Math District Benchmark	All Students who are proficient in Mathematics as Measured by District Assessment will increase by 3 percentage points by year 3.	The percentage of Elementary students who scored proficient on the EOY math assessment decreased by 2.7% The percentage of Middle School students who scored proficient on local EOY Math assessments increased by 18.7% The percentage of High School students who scored proficient on the EOY Math assessments increased by 7.2%
36	Percent of students college/career ready will increase annually by 2% percentage points annually until students reach the highest performance level	In 2022-2023, 49.6% of students were prepared as indicated in the GREEN Tier on the California Dashboard	In 2023-2024, 50.6% of students were prepared as indicated on the California Dashboard	In 2024-2025, 55.2% of students were prepared as indicated on the California Dashboard/Data Quest.	Students who are college/career prepared will increase by 6 percentage points by year 3.	The percentage of students college/career ready increased by 5.6%

37	Percent of college/career students completing the A-G requirements. The completion rate will increase by 2% per year until students reach the highest performance level.	In 2022-2023, 85.9% of college/career students met the A-G completion requirement (Dataquest).	In 2023-2024, 79.5% of college/career students met the A-G completion requirement (Dataquest).	In 2024-2025, 82.0% of college/career students met the A-G completion requirement (Dataquest).	College/career students completing the A-G requirement will increase by 6 percentage points by year 3.	The percent of college/career students completing the A-G requirements decreased by 3.9% (Dataquest).
38	Four Year Adjusted Cohort Graduation Rate will increase by 1% over 3 years	In 2022-2023, the four year adjusted cohort graduation rate was reported as 93.2% (Dataquest).	In 2023-2024, the four-year adjusted cohort graduation rate was reported as 96.3% (Dataquest).	In 2024-2025, the four-year adjusted cohort graduation rate was reported as 97.4% (Dataquest).	Four-year adjusted cohort graduation will increase by 1 percentage point by year 3.	The four-year Adjusted Cohort Graduation Rate increased by 4.2% (Dataquest).
39	Meet all Standards on Local Indicators as reported to the California Dashboard (State Priorities 1, 2, 3, 6, & 7)	In 2022-2023, the District reported that all Local Dashboard indicators were "Met" - Efforts to seek parent input in making decisions for the school district and each school site met - Promotion of parent participation in programs for unduplicated pupils and individuals with exceptional needs met	In 2023-2024, the District reported that all Local Dashboard indicators were "Met" - Efforts to seek parent input in making decisions for the school district and each school site met - Promotion of parent participation in programs for unduplicated pupils and individuals with exceptional needs met	In 2024-2025, the District reported that all Local Dashboard indicators were "Met" - Efforts to seek parent input in making decisions for the school district and each school site met - Promotion of parent participation in programs for unduplicated pupils and individuals with exceptional needs met	Maintain "Met" status on all Locally reported indicators on the California Dashboard.	All Standards on Local Indicators as reported to the California Dashboard were met.

40	Percentage of students on the Early Assessment Program scoring Prepared and Approaching Prepared in ELA will increase by 3 percentage points over 3 years until the students reach the highest level of performance.	In 2022-2023, prepared: 65.23% Approaching Prepared: 19.58% Not Prepared: 15.19% (Dataquest).	In 2023-2024, Prepared: 60.86% Approaching Prepared: 19.52% Not Prepared: 19.62% (Dataquest).	In 2024-2025, Prepared: 63.82%, Approaching Prepared: 17.23% Not Prepared: 18.95% (Dataquest).	The students on the Early Assessment Program scoring Prepared and Approaching Prepared in ELA will increase by 3 percentage points by year 3.	The percentage of students on the Early Assessment Program scoring Prepared decreased by 1.41% and, Approaching Prepared decreased by 2.35%, and not prepared increased by 3.76% (Dataquest).
41	Percentage of students on the Early Assessment Program scoring Prepared and Approaching Prepared in math will increase by 3 percentage points over 3 years until the students reach the highest level of performance.	In 2022-2023, Prepared: 34.76% Approaching Prepared: 22.58% Not Prepared: 42.67% (caaspp-elpac.ets.org).	In 2023-2024, Prepared in Math: 33.02% Approaching Prepared: 25.48% Not Prepared: 41.51% (caaspp-elpac.ets.org).	In 2024-2025, Prepared in Math: 38.07% Approaching Prepared: 20.32% Not Prepared: 41.60% (caaspp-elpac.ets.org).	Students on the Early Assessment Program scoring Prepared and Approaching Prepared in Math will increase by 3 percentage points by year 3.	The percentage of students on the Early Assessment Program scoring Prepared increased by 3.31%, Approaching Prepared in math decreased by 2.26%, and not prepared decreased by 1.07%(caaspp-elpac.ets.org).
42	Percent of Student Expulsions from the District will reduce/maintain a percent lower than the state	In 2022-2023, no students were expelled from the District	In 2023-2024, no students were expelled from the District	In 2024-2025, no students were expelled from the District	Student Expulsions from the District will reduce/maintain a percent lower than the state	The percent of Student Expulsions from the District remained at 0%

43	Access to a Broad Course of Student Local Indicator will be met (State Priority 7)	In 2022-2023, the metric was met as reported by the District. - Student access to standards-aligned instructional materials met. - Implementation of the academic content and performance standards adopted by the State Board met. - Programs and services enabling English learners to access the Common Core State Standards and ELD standards met.	In 2023-2024, the metric was met as reported by the District. - Student access to standards-aligned instructional materials met. - Implementation of the academic content and performance standards adopted by the State Board met. - Programs and services enabling English learners to access the Common Core State Standards and ELD standards met.	In 2024-2025, the metric was met as reported by the District. - Student access to standards-aligned instructional materials met. - Implementation of the academic content and performance standards adopted by the State Board met. - Programs and services enabling English learners to access the Common Core State Standards and ELD standards met.	Access to a Broad Course of Student Local Indicator will continue to be met all 3 years of the plan.	Access to a Broad Course of Student Local Indicator continues to be met.
44	Percent of All Students who score Exceeds or Meet Standards on the CAST will increase by 3 percentage points over 3 years.	In 2022-2023, 38.54% of All Students scored Exceeds or Meets Standards on the CAST.	In 2023-2024, 37.49% of All Students scored Exceeds or Meets Standards on the CAST.	In 2024-2025, 41.41% of All Students scored Exceeds or Meets Standards on the CAST.	All Students who score Exceeds or Meet Standards on the CAST will increase by 3 percentage points by year 3.	The percent of All Students who score Exceeds or Meet Standards on the CAST increased by 2.87%

45	Percentage of students who met both College and Career Indicators for A-G completion (College Ready) and completing a CTE Pathway (Career Ready) (CA Dashboard/Data Quest).	In 2022-2023, 11.6% of students met UC/CSU Requirements AND Completed at Least One CTE Pathway	In 2023-2024, 6.8% of students met UC/CSU Requirements AND Completed at Least One CTE Pathway.	In 2024-2025, 8.8% of students met UC/CSU requirements and completed at Least One CTE Pathway.	Increase the percentage of students meeting both the A-G and CTE requirements for the college and career indicator by 3%.	The percentage of students who met UC/CSU Requirements AND Completed at Least One CTE Pathway decreased by 2.8%.

Goal Analysis for 2025-2026

An analysis of how this goal was carried out in the previous year.

A description of overall implementation, including any substantive differences in planned actions and actual implementation of these actions, and any relevant challenges and successes experienced with implementation.

Overall Implementation & General Successes Overall, the implementation of Goal 1 was highly successful, with 30 of the 30 planned action items implemented. The vast majority of these actions were fully implemented as planned, with only minor adjustments made based on staffing vacancies, salary schedule placements, or increased program participation. Base-funded (non-contributing) actions (Actions 23-30), including GATE program identification, music and art resources, special education support, CTE pathways, and middle school world language courses, were fully implemented as intended without interruption.
A thorough review of state and local metrics indicates notable progress in several key areas. The District successfully met its metrics measuring progress on local indicators, Advanced Placement (AP) pass rates, and dropout rates. Furthermore, the graduation rate improved across almost all student groups (Actions 6, 8, 9, 13, 16, 18-21), with the exception of students experiencing homelessness. While overall CAASPP ELA and Math proficiency rates remain an area for growth due to the lingering impacts of pandemic disruptions on primary grades, specific targeted student groups demonstrated significant academic successes. Specifically, English Learners met their growth target in English Language Arts, and both Students with Disabilities and Hispanic student groups demonstrated growth in Mathematics.
Action-Specific Successes (Contributing Actions) The implementation of specific contributing actions effectively supported our unduplicated student groups (English Learners, Foster Youth, and Low-Income students):
Class Size & Direct Instruction: Elementary Class Size Reduction for Grades 4 and 5 (Action 1) was fully implemented with highly experienced staff, successfully enhancing individualized instruction at Disney and McKinley Elementary.
English Learner Supports: Actions targeting English Learners were robustly implemented. Elementary ELD Specialists (Action 2) and Instructional Assistants (Action 3) provided consistent, targeted language development. Secondary Designated ELD Teachers (Action 6) and Secondary ELD Assistants (Action 19) delivered essential academic language development, with staffing strategically shifted to match site-specific EL populations. Additionally, Secondary Sheltered ELD Sections for Social Studies and Science (Action 18) and Supplemental EL Program Supports (Action 13) were fully implemented to integrate language development with content learning.
Dual Immersion: Dual Immersion Teacher Cost Share (Action 4) and Dual Immersion Assistants (Action 5) were fully staffed, strengthening language proficiency and cultural inclusion at McKinley and Disney Elementary.
Professional Development & Curriculum: Induction PD for new teachers (Action 8), District-wide PD Days (Action 9), and Culturally Responsive Pedagogy PLCs (Action 20) were

fully implemented, promoting inclusive, equity-focused instructional strategies. Curriculum Specialists (Action 14) and Library Coordinators (Action 15) successfully supported curriculum alignment and enhanced literacy access.
Intervention & Wellness: Elementary RTI for Reading/Math (Action 10) and RTI Assessment Programs like iReady and School City (Action 21) effectively provided tiered interventions and data-informed instructional planning. Furthermore, Middle School Psychologists (Action 11) and Behavior Specialists (Action 12) provided critical mental health and behavioral support, promoting a positive school climate.
Family Engagement: Interpreters for Second Language Learner Parents (Action 7) successfully facilitated family engagement, utilizing AI in some instances to efficiently lower expenditures.
Targeted Student Support: Support for Twice Exceptional (GATE + Unduplicated) students (Action16) was fully implemented, addressing their unique academic and social-emotional needs.
Challenges and Substantive Differences. while implementation was largely successful, the District experienced relevant challenges, primarily driven by state-wide staffing shortages and recruitment difficulties. Identifying highly qualified staff for competitive positions—particularly instructional aides—resulted in temporary vacancies at several school sites.

Budgetary Variances due to Staffing: Staffing dynamics created discrepancies between budgeted amounts and estimated actuals. In some instances (Actions 2, 3, 5, 6, 10, 13, 14, 17, and 19), vacancies or the use of long-term substitutes resulted in lower-than-anticipated expenditures. Conversely, when vacancies were successfully filled with highly qualified candidates (Actions 1, 4, 8, 11, 12, and 14), it resulted in increased salary and benefit expenditures due to their advanced placement on the salary schedule.
Ongoing Areas for Growth: Increasing the District's A-G completion rate and improving the College and Career Indicator (CCI) remain priority challenges. BUSD is actively monitoring these metrics for accurate reporting and is developing additional A-G completion incentives, evaluating graduation requirement adjustments, and utilizing PLCs to increase student performance in A-G coursework. Additionally, general academic performance in CAASPP ELA and Math for the broader student population remains a challenge that will require sustained intervention efforts.
Action Specific Successes:
Elementary Class Size Reduction (Grades 4 and 5) Action 1
- Fully implemented with an increase in experienced staff.
- Targeted subgroups: Foster Youth, Low Income, English Learners.
- Analysis: Increased staffing at Disney and McKinley Elementary supported smaller class sizes, enhancing individualized instruction.

Elementary ELD Specialists Action 2
- Fully implemented with the shifting of staffing based on EL populations at school sites.
- Targeted subgroup: English Learners (TK–5).
- Analysis: ELD specialists provided targeted language development, maintaining consistent support across elementary grades.

Elementary ELD Instructional Assistants Action 3
- Fully implemented with temporary vacancies at specific school sites.
- Targeted subgroup: English Learners (TK–5).
- Analysis: Assistants supported ELD instruction, contributing to language acquisition and academic engagement.

Dual Immersion Teacher Cost Share Action 4
- Fully implemented with consistency in staffing.
- Targeted subgroups: Low Income, English Learners.
- Analysis: Bilingual instruction at McKinley and Disney Elementary strengthened language proficiency and cultural inclusion.

Dual Immersion Instructional Assistants Action 5
- Fully implemented based on existing program needs.
- Targeted subgroup: English Learners.
- Analysis: Provided classroom support in dual immersion settings, reinforcing bilingual learning.

Secondary Designated ELD Teachers Action 6
- Fully implemented with shifting in staffing based on EL populations in schools and grade levels.
- Targeted subgroup: English Learners (Grades 6–12).
- Analysis: Teachers delivered designated ELD instruction, supporting academic language development.

Interpreters for Second Language Learner Parents Action 7
- Fully implemented, and AI has been used in some cases to lower expenditures.
- Targeted subgroups: English Learners, Foster Youth, Low Income.
- Analysis: Interpreters facilitated family engagement and access to school services.

Induction Professional Development (TOSA) Action 8
- Fully implemented with a change in personnel mid-year.
- Targeted subgroups: Low Income, Foster Youth, English Learners.
- Analysis: Supported new teachers with mentorship and training, improving instructional quality.
- Funds identified have not been increased for multiple years and no longer fund the current staffing costs for a day and a half of Professional Development for all staff. The release of unspent Learning Recovery Block Grant Funds will be used to ensure we can sustain the time and fund all staff to participate in Professional Development focused on improving LCAP Goals and measuring outcomes to ensure full implementation of this action item.

Professional Development Days for All Teachers Action 9
- Fully implemented with consistency in planned Professional Development.
- Targeted subgroups: English Learners, Foster Youth, Low Income.
- Analysis: Focused on inclusive practices and academic strategies to support diverse learners.

Elementary RTI for Reading/Math Action 10
- Fully implemented with reduced expenditures due to fewer extra hourly assignments.
- Targeted subgroups: Low Income, Foster Youth, English Learners.
- Analysis: RTI programs provided tiered interventions to address academic gaps.

Middle School Psychologists (2.0 FTEs) Action 11
- Fully implemented with a change in personnel.
- Targeted subgroups: English Learners, Foster Youth, Low Income.
- Analysis: Psychologists supported mental health and academic success in middle grades.

Behavior Specialists Action 12
- Fully implemented with the addition of 7.0 FTEs
- Targeted subgroups: English Learners, Foster Youth, Low Income.
- Analysis: Specialists addressed behavioral needs, promoting a positive school climate.

English Learner Program – Supplemental Supports Action 13
- Fully implemented with budget more accurately reflected in personnel costs in Actions 3 & 19
- Targeted subgroup: English Learners.
- Analysis: Provided additional resources and services to enhance EL achievement.

Curriculum Specialists (Elementary) Action 14
- Fully implemented with new personnel at specific school sites.
- Targeted subgroups: Foster Youth, Low Income, English Learners.
- Analysis: Specialists supported curriculum alignment and instructional planning.

Library Coordinators (Elementary) Action 15
- Fully implemented with temporary vacancies at specific school sites.
- Targeted subgroups: English Learners, Foster Youth, Low Income.
- Analysis: Coordinators enhanced literacy access and library programming.

Support for Twice Exceptional Students (GATE + Unduplicated) Action 16
- Fully implemented with Professional Development with an increase of funding and staffing
- Targeted subgroups: English Learners, Low Income, Foster Youth.
- Analysis: Services addressed unique academic and social-emotional needs.

Elementary Assistant Principals (2.0 FTE) Action 17 (Replaced previous action Elementary ELD Instructional Supports from 24-25 Plan)
Fully implemented with Staff at Miller and Jefferson Elementary Schools
Targeted Subgroups: English Learners & Low Income
Analysis: Larger schools received better support with an assistant principal in place instead of Curriculum Specialist with limited responsibilities.

Secondary Sheltered ELD Sections (Social Studies & Science) Action 18
- Fully implemented with increased need, but budget restraints did not allow for increased staffing.
- Targeted subgroup: English Learners (Grades 6–8).
- Analysis: Sheltered instruction integrated language development with content learning.

Secondary ELD Instructional Assistants (ALL FTEs now reflected in 19 instead of action 13) Action 19
- Fully implemented with shifting of staffing based on EL Populations in school sites and grade levels.
- Targeted subgroup: English Learners (Grades 6–12).
- Analysis: Assistants supported ELD instruction and student engagement. Culturally Responsive

Pedagogy PD (K–12 PLCs) Action 20
- Fully implemented as planned with funding from A-G grant prioritized for expenditures
- Targeted subgroups: Low Income, Foster Youth, English Learners.
- Analysis: PD promoted inclusive teaching practices and equity-focused instruction. RTI Assessment

Programs (iReady & School City) Action 21
- Fully implemented as planned.
- Targeted subgroups: English Learners, Foster Youth, Low Income.
- Analysis: Assessment tools, informed instruction, and intervention planning.

Specific Successes (Non-Contributing Actions).
GATE Program Annual Identification Process, District GATE Coordinator, Music Instrument Repair and Replacement, Secondary Art Supplies and Materials, Provide support for students with Disabilities to achieve their IEP goals, Elementary Music Teachers Staffing, Provide CTE Pathway offerings to secondary students, and World Language Courses at Middle Schools. Actions 23-30.
- Fully implemented as planned.
- Analysis: General Budget Base Funding was used to implement all of the above actions as intended. Staffing, account strings, purchases, and distribution of resources were implemented with consistency from previous years and as planned.

An explanation of material differences between Budgeted Expenditures and Estimated Actual Expenditures and/or Planned Percentages of Improved Services and Estimated Actual Percentages of Improved Services.

Summary: Overall, the district experienced a net overspending of approximately $31,552 for Goal 1 contributing initiatives. This variance was largely driven by a mix of staffing-related challenges, such as higher salary placements in specific areas, offset by unfilled positions and recruitment difficulties in other areas. The most significant overspending occurred in Elementary RTI for Reading/Math (Action 1.10), which saw expenditures come in nearly $123,276 over budget due to an increase in the need for extra hourly assignments and loss of LREBG funds. Other areas with lower-than-expected expenditures included Elementary ELD Instructional Assistants, Elementary Assistant Principals, Culturally Responsive Pedagogy PD, and Outdoor Science School Support, the latter of which saw no expenditures during this cycle. While the services were maintained, they were often delivered with new staff at full capacity but lower salary rate or funding with site funds which didn't require district supplemental support..
Conversely, some areas saw higher-than-anticipated costs. Notably, expenditures increased for Curriculum Specialists and Elementary Class Size Reduction. These increases were attributed to either higher salary placements for highly qualified hires, expanded staffing to meet growing student needs, or mid-year personnel shifts that resulted in staffing overlaps.
Despite these fluctuations, the district maintained its commitment to the core objectives of Goal 1: ensuring high-quality instruction aligned with state standards, supporting English learners and other unduplicated student groups, and enhancing student achievement through targeted interventions. The adjustments made reflect a responsive approach to evolving needs, balancing fiscal responsibility with the goal of sustaining and improving educational outcomes for unduplicated students.
Specific Actions: Action 1.1 – Elementary Class Size Reduction (Grades 4 and 5)
Variance: Increase in expenditures (Planned: $219,098 | Actual: $279,232).
Targeted subgroups: Low Income, English Learners.
Analysis: Increased staffing at Disney and McKinley Elementary supported smaller class sizes, enhancing individualized instruction with an increase in highly qualified, experienced staff, which resulted in increased salary expenditures.
Action 1.10 – Elementary RTI for Reading/Math
Variance: Increase in expenditures (Planned: $473,376 | Actual: $596,652).
Targeted subgroups: Low Income, English Learners.
Analysis: While tiered interventions supported academic gaps, actual expenditures were significantly higher due to additional extra hourly assignments that were previously funded through the LREBG funds that were no longer available in 25-26.
Action 1.16 - Targeted support for Twice Exceptional students who qualify as GATE and are included in the unduplicated count
Variance: Decrease in expenditures (Planned $70,000 | Actual $41,197).
Targeted: GATE and Low Income
Analysis: Position was not filled until the spring semester. No applicants when flown multiple times in the fall semester.
Action 1.17 – Elementary Assistant Principals (Miller & Jefferson 2.0)
Variance: Decrease in expenditures (Planned: $321,239 | Actual: $268,085).
Targeted subgroups: Low Income, English Learners.
Analysis: Staff salaries were lower than anticipated.
Action 1.20 – Culturally Responsive Pedagogy PD (K–12 PLCs)
Variance: Decrease in expenditures (Planned: $125,000 | Actual: $73,044).
Targeted subgroups: Low Income, English Learners.
Analysis: The district delivered the planned professional development, but utilized existing structures and alternative scheduling, which reduced the need for external extra-hourly compensation. Additionally, A-G Grant funds were utilized to pay for the primary cost for delivering Professional Development.
Action 1.22 – Outdoor Science School Support Funding
Variance: Decrease in expenditures (Planned: $20,000 | Actual: $0).
Targeted subgroups: Low Income, English Learners.
Analysis: While established as a new support measure, schools were able to fully fund their trips using site funds without the need for additional district funding, resulting in no expenditures.

A description of the effectiveness or ineffectiveness of the specific actions to date in making progress toward the goal.

Summary: The analysis of Goal 1 for the 2025-2026 school year plan reveals a mixed but improving picture of effectiveness regarding all actions taken to date. Goal 1, which focuses on career and college readiness through high-quality instruction, has seen varied results across different metrics and student groups, though recent data indicates strong post-pandemic recovery in several areas. Each action has been implemented and has been determined to be effective to some degree.

The CAASPP scores, a key metric for assessing academic performance, show continuous improvements for English Learners, increasing from a baseline of 13.41% to 15.99% in meeting or exceeding standards in English Language Arts (ELA). Other groups, such as socioeconomically disadvantaged (SED) students and homeless students, experienced an initial decline but have shown recent rebounds. For instance, SED students' scores rebounded to 43.82% (up from 43.15% the previous year), and homeless students' scores recovered to 45.16% (up from 25.00%). Overall, the CAASPP scores for all students increased from the prior year to 58.02% in ELA and 46.56% in Mathematics (which exceeds the original math baseline), indicating that instructional interventions (Actions 8–12) are beginning to yield effective results - specifically in grades 6-8 which experienced significant gains on average of 4-6% increase.

Graduation rates present a highly positive and consistent trend, with overall rates increasing from 93.2% to an impressive 97.4%. English Learners saw a substantial and sustained increase, rising from 80.6% to 95.6%, and socioeconomically disadvantaged students' rates steadily rose from 91.0% to 95.5% (Actions 6, 8, 9, 13, 16, 18, 19, 20, and 21). Furthermore, homeless students experienced a rebound in graduation rates, improving from 85.2% to 95.2%, though this remains an area requiring additional targeted support.

Reclassification rates for English Learners, another important metric, initially decreased from a baseline of 20.7% to 12.67%, suggesting that early strategies were struggling to help students achieve proficiency. However, recent data shows a recovery to 13.7% (Actions 3, 5, 13, and 19). The earlier drop may have been partially influenced by a large, temporary "bubble" of students being reclassified immediately following the return from distance learning.

When comparing Burbank Unified School District's performance to the state of California and similar districts it has been consistent. For example, the latest California School Dashboard indicates that BUSD's performance in English Language Arts is categorized as "Green" (High). Furthermore, our targeted efforts in Mathematics have paid off, with the District improving from a "Medium/Yellow" status to a "Green" status on the most recent Dashboard.

The non-contributing actions listed under Goal 1 (Actions 1.22 through 1.29) are considered highly effective based on the metrics and local data provided in the plan. These actions primarily support the broader instructional and enrichment framework of BUSD and are designed to enhance student engagement, access to a well-rounded curriculum, and overall academic achievement. For instance, actions such as the GATE Program Identification Process (Action 1.22), the District GATE Coordinator (Action 1.23), and support for music and arts education (Actions 1.24, 1.25, and 1.27) contribute to maintaining student interest and connectedness, which are monitored through local engagement surveys. Additionally, the District’s investment in Career Technical Education (CTE) pathways (Action 1.28) and world language courses at the middle school level (Action 1.29) directly align with college and career readiness. These offerings support the District’s performance on the College and Career Indicator (CCI)—which rebounded to 55.2%—and A-G completion rates which increased to 49.2%. While these actions are not directly tied to supplemental funding, they serve all students and contribute significantly to overall academic equity.

Specific Actions:

Action 1.1 – Elementary Class Size Reduction (Grades 4 and 5) Effective (Metrics 1.1–1.16; 1.20-1.26: CAASPP ELA & Math; Graduation). Improved individualized instruction and teacher collaboration. CAASPP ELA, Math, and progress towards proficiency increased for English learners (EL CAASPP ELA scores increased to 15.99%), and graduation rates consistently increased for ELs (from a baseline of 80.6% to 94.5%) and socioeconomically disadvantaged students (from a baseline of 91.0% to 96.8%), demonstrating effective increased services for these target groups.

Action 1.2 – Elementary ELD Specialists Effective (Metrics 1.2, 1.10, 1.17, 1.18: EL CAASPP & Reclassification). ELs showed consistent growth in ELA CAASPP (increasing from a 13.41% baseline up to 15.99%) and ELPAC progress; reclassification initially declined but showed recent recovery (rebounding to 13.7%), stabilizing after an initial post-pandemic bubble. This targeted staffing directly improved services and outcomes for the EL population.

Action 1.3 – Elementary ELD Instructional Assistants Effective (Metrics 1.2, 1.10, 1.17, 1.18). Supported ELs with small group instruction. ELPAC progress improved, and reclassification rates showed signs of recovery following previous data bubbles (improving to 13.7%), validating the effectiveness of increased direct instructional support for EL students.

Action 1.4 – Dual Immersion Teacher Cost Share Effective (Metrics 1.1–1.16; 1.20-1.26: CAASPP ELA & Math; Graduation). Provided robust bilingual engagement; CAASPP ELA, Math, and progress towards proficiency increased for English learners (up to 15.99% in ELA), while graduation rates increased for ELs (94.5%) and socioeconomically disadvantaged students (96.8%), demonstrating strong efficacy in improving outcomes for unduplicated pupils.

Action 1.5 – Dual Immersion Instructional Assistants Effective (Metrics 1.1–1.16; 1.20-1.26: CAASPP ELA & Math; Graduation). Reinforced bilingual learning; EL performance

demonstrated steady upward trends (with EL CAASPP ELA reaching 15.99%), highlighting the value of increased primary language support.
Action 1.6 – Secondary Designated ELD Teachers Effective (Metrics 1.2, 1.10, 1.17, 1.18). ELs improved in both Math and ELA CAASPP (growing to 15.99% in ELA); reclassification rates showed signs of rebounding to 13.7%. This action remains a critical increased service for accelerating secondary language acquisition.
Action 1.7 – Interpreters for Second Language Learners Effective (Metrics 1.2, 1.10, 1.17, 1.18, 1.33). Improved family engagement for students whose home language is not English, supporting the conditions that led to EL CAASPP growth (up to 15.99%) and increased progress toward proficiency. Schools primarily supported include Burbank High (14.4% EL Population), George Washington ES (20.8% EL Population), Joaquin Miller ES (35.1% EL Population), John Muir MS (17.7% EL Population), and Ralph Emerson (25.2% EL Population).
Action 1.8 – Induction Professional Development (TOSA) Effective (Metrics 1.1–1.16; 1.20-1.26: CAASPP ELA & Math; Graduation). Supported new teachers, contributing to recent rebounds in CAASPP subgroups; graduation rates for ELs (increased to 94.5%) and SEDs (increased to 96.8%) increased notably, showing the indirect but powerful impact of well-trained staff on high-needs populations.
Action 1.9 – Professional Development Days for All Teachers Effective (Metrics 1.1–1.16; 1.20-1.26: CAASPP ELA & Math; Graduation). Supported inclusive instruction; overall graduation rates reached 97.4% (up from a 93.2% baseline), and CAASPP metrics for subgroups showed recovery. Funds identified have not been increased for multiple years and no longer fund the current staffing costs for a day and a half of Professional Development for all staff. The release of unspent Learning Recovery Block Grant Funds will be used to ensure we can sustain the time and fund all staff to participate in Professional Development focused on improving LCAP Goals and measuring outcomes to ensure the effectiveness of this action item.
Action 1.10 – Elementary RTI for Reading/Math Effective (Metrics 1.1–1.16; 1.20-1.26: CAASPP ELA & Math; Graduation). Tiered interventions supported academic gaps; dropout and absenteeism improved, and CAASPP results in targeted subgroups rebounded (e.g., SED Math improved to 33.74%), proving highly effective at improving services for struggling learners.
Action 1.11 – Middle School Psychologists (2.0 FTEs) Effective (Metrics 1.20–1.28: Graduation & Dropout Rates). Supported mental health; overall attendance and graduation metrics demonstrated strong improvement (overall graduation rising to 97.4%), successfully removing social-emotional barriers to academic achievement for unduplicated students.
Action 1.12 – Behavior Specialists Effective (Metric 1.42: Expulsions). Suspension and expulsion rates declined; behavioral support significantly expanded across sites, effectively improving the learning environment and safety for all unduplicated subgroups.
Action 1.13 – English Learner Program – Supplemental Supports Effective (Metrics 1.2, 1.10, 1.17, 1.18). ELs steadily improved in CAASPP (reaching 15.99% in ELA) and ELPAC; reclassification stabilized and recovered slightly to 13.7% after adjusting for the previous year's data bubble.
Action 1.14 – Curriculum Specialists (Elementary) Effective (Metrics 1.1–1.16; 1.20-1.26: CAASPP ELA & Math; Graduation). Supported standards-aligned instruction; implementation fidelity is high. Graduation rates increased for ELs (94.5%) and socioeconomically disadvantaged students (96.8%). Subgroups improving in ELA include low-income students at Walt Disney ES and William McKinley ES (Yellow on Dashboard with growth), and English Learners at Providencia & William McKinley (Yellow with growth). Subgroups improving in Math include low-income students at Bret Harte (Green with growth), Providencia, and William McKinley (Yellow with growth); and English Learners at Ralph Emerson and William McKinley (Yellow with growth).
Action 1.15 – Library Coordinators (Elementary) Partially Effective (Metrics 1.1–1.8: CAASPP ELA). Literacy access improved, and support for unduplicated students remained consistent. EL CAASPP scores on ELA improved to 15.99%. Similar to Action 1.14, SED student ELA scores are rebounding but require further momentum. Subgroups improving in ELA include low-income students at Walt Disney ES and William McKinley ES (Yellow on Dashboard with growth), and English Learners at Providencia & William McKinley (Yellow with growth).
Action 1.16 – Support for Twice Exceptional Students (GATE + Unduplicated) Ineffective (Metrics 1.8 & 1.16: CAASPP ELA & Math). CAASPP scores initially declined before showing minimal recent improvement; therefore, funding will be increased to provide more robust, targeted professional development to better support this unique intersection of student needs.
Action 1.17 – Elementary Assistant Principals Effective (Metrics 1.1–1.16; 1.20-1.26: CAASPP ELA & Math; Graduation). Supported standards-aligned instruction; implementation fidelity is high. Graduation rates increased for ELs (to 94.5%) and socioeconomically disadvantaged students (to 96.8%).
Action 1.18 – Secondary Sheltered ELD Sections (Social Studies & Science) Effective (Metrics 1.2, 1.10, 1.17, 1.18). Supported ELs in content areas; contributed to modest CAASPP growth (EL ELA at 15.99%) and rebounding progress towards reclassification (13.7%), directly improving access to the core curriculum.

Action 1.19 – Secondary ELD Instructional Assistants (5 FTEs) Effective (Metrics 1.2, 1.10, 1.17, 1.18). ELPAC progress improved; reclassification recovered to 14.8% (with district-wide average at 13.7%), with modest but consistent CAASPP gains in ELA scores.
Action 1.20 – Culturally Responsive Pedagogy PD (K–12 PLCs) Effective (Metrics 1.1–1.16, 1.20–1.29, 1.34–1.39). Supported equity-focused instruction; overall graduation and engagement metrics improved across unduplicated groups (SED graduation rising to 96.8%).
Action 1.21 – RTI Assessment Programs (iReady & School City) Effective (Metrics 1.1–1.16, 1.20–1.29, 1.34–1.39). Local assessment proficiency improved, providing critical data to inform classroom instruction and target specific interventions for EL, SED, and Foster Youth.
Non-Contributing Actions (Evaluated Using All-Student Metrics)
Action 1.22 – Outdoor Science School Support Funding Effective (Metrics 1.44). Supported equity-focused instruction, Science Instruction for students in grade 5; CAST scores increased by 2.87%
Action 1.23 – GATE Program Identification Effective (Metrics 1.39 & 1.43: General engagement and access metrics). Maintained identification process; successfully supported enrichment across the district.
Action 1.24 – District GATE Coordinator Effective (Metrics 1.39 & 1.43). Ensured continuity and support for program oversight.
Action 1.25 – Music Instrument Repair/Replacement Effective (Metrics 1.32, 1.39 & 1.43). Supported continuous arts access and student engagement.
Action 1.26 – Secondary Art Supplies Effective (Metrics 1.32, 1.39 & 1.43). Supported visual arts instruction and broad course of study access.
Action 1.27 – Support for Students with Disabilities (IEP Goals) Effective (Metrics 1.20, 1.25, 1.39 & 1.43). Maintained IEP services; graduation rates for SWD remained stable, and CAASPP math scores showed growth.
Action 1.28 – Elementary Music Teachers Effective (Metrics 1.39 & 1.43). Provided music instruction to ensure a broad course of study and a well-rounded curriculum for students in all TK-5 grade levels.
Action 1.29 – CTE Pathway Offerings Effective (Metrics 1.36, 1.39 & 1.43). Supported college/career readiness; the College/Career Indicator (CCI) rebounded successfully from a 50.6% baseline to 55.2%.
Action 1.30 – World Language Courses at Middle Schools Effective (Metrics 1.29, 1.31, 1.39 & 1.43). Supported foundational language instruction and A-G completion readiness, contributing to overall high graduation rates (97.4%).

A description of any changes made to the planned goal, metrics, target outcomes, or actions for the coming year that resulted from reflections on prior practice.

Reflections on the implementation of Goal 1 during the 2025–2026 school year have led to a collective decision by the Burbank Unified School District (BUSD) and our educational partners to "stay the course" for the upcoming 2026–2027 LCAP. Because the District executed significant, strategic adjustments to supplemental funding and actions in the previous year to more effectively support student academic performance and well-being, the focus for the coming year is to allow these newly established programs to mature and solidify. Therefore, no substantive changes are being made to the planned goal, metrics, target outcomes, or actions for the 2026–2027 cycle.
Reflecting on the 2025–2026 Changes: The consensus to maintain our current alignment is rooted in the success of the targeted shifts implemented during the 2025–2026 school year. In response to mixed post-pandemic academic results, the District reallocated funds to more impactful areas, and those decisions are now yielding positive early indicators. The following key changes, initiated in 2025-2026, will be maintained without alteration for the 2026-2027 LCAP:
Behavior Specialists (Action 1.12): The District maintains the significant staffing increase from 2.0 FTEs to 9.0 FTEs. This expansion has successfully enhanced student behavioral support, which indirectly but powerfully supports academic performance and engagement.
Elementary Assistant Principals: BUSD will continue to fund the Elementary Assistant Principals at Miller ES and Jefferson ES. This strategic reallocation—replacing former Curriculum Specialists at these specific sites—successfully provided the necessary administrative capacity to enhance school management and student support at our two largest elementary schools.
Response to Intervention (Action 1.10): The funding for elementary RTI will be increased at the right-sized amount. This reflects a successful realignment of resources to match actual historical expenditures for extra hourly services, allowing funds to be utilized elsewhere without negatively impacting tiered interventions.
Twice Exceptional GATE Students (Action 1.16): The District will maintain the increased funding levels established last year to provide robust, targeted professional development that better addresses the unique needs of twice-exceptional students.
Outdoor Science School Support: The District continues to allocate $20,000 to enhance experiential learning opportunities and boost student engagement in the sciences.
Interpreter Efficiency (Action 1.7): The District will continue to leverage efficient practices, including the use of AI for translating documents and written correspondence, to maximize resources while maintaining strong communication with second-language learner parents.
Long-Term English Learners (LTELs): Because BUSD has over 100 Long-Term English Learners, the District will continue to directly support these students through our existing, highly effective English Learner Development actions embedded in Goal 1. Having seen positive results from our current services—such as improved ELPAC progress and rebounding reclassification rates—we will continue to leverage these structures to accelerate outcomes for our LTEL population.
Professional Development for all Staff (Action 1.9) The recent re-allocation of unspent LREBG funds will be included in the 26-27 and 27-28 LCAP plans to increase and improve professional development offerings and opportunities as part of the existing goal, one action item for professional development (Action 9). No expenditures of LREBG funds were expended in 25-26. Additional funding provided by LREBG will ensure all staff can participate in full.
Maintaining Metrics and Target Outcomes: The metrics and target outcomes used to evaluate Goal 1 will generally remain unchanged. BUSD will continue tracking the impact of behavior specialists on incident rates, measuring the academic growth supported by our APs and instructional staff, and rigorously monitoring CAASPP scores, EL reclassification rates, and A-G completion rates.
Additionally, new/additional instructional goals were added to key metrics to monitor reading proficiency in Grade 3 (metrics 1.1 and 1.3), grade-level proficiency in mathematics in middle school grades (6-8; metrics 1.10 and 1.11) LTEL data points were added to metrics that measure ELD progress and reclassification (metrics 1.2, 1.10, and 1.17) for school years for which this data was available. Metric 1.33 identified increases in parent decision-making and participation. Lastly, data was updated for the baseline year in metric 1.41 regarding the Early Assessment Program.

In conclusion, while the District faced broader challenges related to the pandemic's lingering effects, the data indicate that our targeted interventions are working. The 2026–2027 school year represents a commitment to stability and implementation fidelity. By continuing the actions refined during the 2025–2026 cycle and contributing additional LREBG funds to existing actions (1.9), BUSD aims to build upon our recent successes, driving continuous improvement in overall academic performance and student well-being.

A report of the Total Estimated Actual Expenditures for last year's actions may be found in the Annual Update Table. A report of the Estimated Actual Percentages of Improved Services for last year's actions may be found in the Contributing Actions Annual Update Table.

Actions

Action #	Title	Description	Total Funds	Contributing
1	Elementary Class Size Reduction Grades 4 and 5	Research shows that smaller class size coupled with effective teaching practices results in greater students achievement. The makeup of classrooms is approximately 40% of students who are English learners, low-income students, and students experiencing homelessness. Teachers and instructional assistants provide students with small group and 1:1 instruction that will towards student academic success. The action being developed is based on the needs of English learners and socioeconomically disadvantaged students (low-income students). The following data set provides the reader with additional data for comparative purposes. Disney ELA SBAC data indicates the following need to raise the percentage of students who meet or exceed the standard from the following 2022-23 baseline: All (68.04%); ELs (16.67%); SEDs (55.00%); Homeless (**%) Disney Math SBAC data indicates the following need to raise the percentage of students who meet or exceed the standard from the following 2022-23 baseline: All (50.00%); ELs (7.70%); SEDs (36.91%); Homeless (**%) McKinley ELA SBAC data indicates the following need to raise the percentage of students who meet or exceed the standard from the following 202-23 baseline: All (45.46%); ELs (0.0%); SEDs (31.33%); Homeless (**%) McKinley Math SBAC data indicates the following need to raise the percentage of students who meet or exceed the standard from the following 2022-23 baseline: All (37.05%); ELs (11.11%); SEDs (19.27%); Homeless (**%) (**% is too small at school level for percentage) 4th and 5th Grade Class Size Reduction for Targeted Subgroups - Disney Elementary and McKinley Elementary (Title I Schools) Smaller class sizes will allow the teacher and instructional assistants to work with students in small groups and in a 1:1 setting, resulting in increased student achievement.	$284,816.64	Yes
2	Elementary ELD Specialists	The action being developed is based on the needs of English learners. The following data set provides the reader with additional data for comparative purposes. ELA SBAC data indicates the following need to raise the percentage of students who meet or exceed the standard from the following 2022-23 baseline: ELs (13.41%). Math SBAC data indicates the following need to raise the percentage of students who meet or exceed the standard from the following 2022-23 baseline: ELs (15.14%). 22-23 ELPAC making progress rate is 57.7%. 2022-23 reclassification rate is 20.7% English Language Development Specialists - Maintain 4 ELD specialists to support students and staff at elementary schools with English Learners	$616,583.88	Yes

		- Organize and conduct professional development in Designated ELD - Monitor progress of English Learners and recently reclassified students - Support Project G.L.A.D. and Step up to Writing training and program implementations - Assist in the analysis of data and review with staff - Provide demonstration lessons - Participate in SST's, IEP's, and the development of ILP's for English learners - Provide direct intervention services to English Learners The work of ELD specialists provide support to teachers, instructional assistants and students will result in increases (or maintaining when at a high level like reclassification rate) in student achievement and teacher/instructional assistant effectiveness.		
3	Elementary ELD Instructional Assistants	The action being developed is based on the needs of English learners. The following data set provides the reader with additional data for comparative purposes. ELA SBAC data indicates the following need to raise the percentage of students who meet or exceed the standard from the following 2022-23 baseline: ELs (13.41%). Math SBAC data indicates the following need to raise the percentage of students who meet or exceed the standard from the following 2022-23 baseline: ELs (15.14%). 22-23 ELPAC making progress rate is 57.7%. 2022-23 reclassification rate is 20.7% English Language Development Instructional Assistants - Provide additional hourly support in E/LA and ELD at the elementary level - Work with small groups of students to allow for differentiation and Tier II intervention - Assist teachers in the implementation of the ELD program - Assist teachers in the implementation of the RtI program The work of ELD instructional assistants provide support to teachers and students will result in increases (or maintaining when at a high level like reclassification rate) in student achievement and teacher/instructional assistant effectiveness on ELA and math SBAC. Addressing Differentiated Assistance for Long-Term English Learners (LTELs) As part of the District's strategic response to Year 2 Differentiated Assistance for our Long-Term English Learner (LTEL) student group, we have explicitly refined Goal 1, Action 3 (Elementary ELD Instructional Assistants) to clarify exactly who is doing what for whom. Who: Elementary ELD Instructional Assistants. Is Doing What: Providing highly targeted academic interventions, utilizing newly adopted supplemental ELD curriculum, and applying specific ELD instructional strategies. To ensure maximum effectiveness, these instructional aides will participate in dedicated professional development time where they will be explicitly trained on supportive mechanisms, the new supplemental curriculum, and advanced ELD instructional strategies. For Whom: Long-Term English Learners (LTELs) and elementary students at risk of becoming LTELs, within both designated ELD classrooms and general education classrooms containing	$1,034,809.38	Yes

		clusters of English Learners. Expected Outcomes and Dashboard Alignment This action will be specifically utilized to support LTELs in accelerating their academic performance on various state and local assessments, increasing their opportunities to progress toward reclassification. By utilizing highly trained instructional aides to provide accessible, sequentially supportive academic interventions, the district aims to reduce student frustration and disengagement. Therefore, this direct academic support acts as a critical lever to address the specific Differentiated Assistance dashboard indicators: it will improve overall academic performance in ELA and Math (Priority #4), while simultaneously increasing school connectedness to help reduce chronic absenteeism and suspension rates (Priority #6) for our LTEL population.		
4	Dual Immersion Teacher Cost Share	Class Size Reduction for Dual Immersion The action being developed is based on the needs of English learners and socioeconomically disadvantaged students (low-income students). The following data set provides the reader with additional data for comparative purposes. Disney ELA SBAC data indicates the following need to raise the percentage of students who meet or exceed the standard from the following 2022-23 baseline: All (68.04%); ELs (16.67%); SEDs (55.00%); Homeless (**%) Disney Math SBAC data indicates the following need to raise the percentage of students who meet or exceed the standard from the following 2022-23 baseline: All (50.00%); ELs (7.70%); SEDs (36.91%); Homeless (**%) McKinley ELA SBAC data indicates the following need to raise the percentage of students who meet or exceed the standard from the following 202-23 baseline: All (45.46%); ELs (0.0%); SEDs (31.33%); Homeless (**%) McKinley Math SBAC data indicates the following need to raise the percentage of students who meet or exceed the standard from the following 2022-23 baseline: All (37.05%); ELs (11.11%); SEDs (19.27%); Homeless (**%) (**% is too small at the school level for a percentage) 4th and 5th Grade Class Size Reduction for Targeted Subgroups - Disney Elementary and McKinley Elementary (Title I Schools) Research shows that a smaller class size, coupled with effective teaching practices, results in greater student achievement. The makeup of classrooms is primarily of unduplicated students with a concentration of students who are English learners and low-income. Teachers and instructional assistants provide students with small-group and 1:1 instruction that will contribute to student academic success. - This action will fund the partial cost to run the dual immersion classes, as it provides the most effective environment for English Language Learners to thrive academically - This action will reduce class size so that there are 5 to 7 fewer students per class to provide additional support to ELD & Low-income students.	$672,251.40	Yes
5	Dual Immersion	Dual Immersion (Spanish/English) Program	$149,109.72	Yes

	Instructional Assistants	The action being developed is based on the needs of English learners and socioeconomically disadvantaged students (low-income students). The following data set provides the reader with additional data for comparative purposes. Disney ELA SBAC data indicates the following need to raise the percentage of students who meet or exceed the standard from the following 2022-23 baseline: All (68.04%); ELs (16.67%); SEDs (55.00%); Homeless (**%) Disney Math SBAC data indicates the following need to raise the percentage of students who meet or exceed the standard from the following 2022-23 baseline: All (50.00%); ELs (7.70%); SEDs (36.91%); Homeless (**%) McKinley ELA SBAC data indicates the following need to raise the percentage of students who meet or exceed the standard from the following 202-23 baseline: All (45.46%); ELs (0.0%); SEDs (31.33%); Homeless (**%) McKinley Math SBAC data indicates the following need to raise the percentage of students who meet or exceed the standard from the following 2022-23 baseline: All (37.05%); ELs (11.11%); SEDs (19.27%); Homeless (**%) (**% is too small at school level for percentage) 4th and 5th Grade Class Size Reduction for Targeted Subgroups - Disney Elementary and McKinley Elementary (Title I Schools) - Instructional assistants are not provided in general education classrooms and only for one hour per day in transitional kindergarten and kindergarten classrooms - Provide Instructional Assistants (IAs) - Primary Language Support for three hours daily - Provide Primary Language Support at Disney Elementary and McKinley Elementary - Work with small groups of students to allow for differentiation and Tier II Intervention (as needed) - Serve as an additional language model of the target language - Assist teachers in the implementation of the dual immersion program		
6	Secondary Designated ELD Teachers	The action being developed is based on the needs of English learners to provide supplemental English language development instruction in addition to the core instruction provided at the site. The following data set provides the reader with additional data for comparative purposes. ELA SBAC data indicates the following need to raise the percentage of students who meet or exceed the standard from the following 2022-23 baseline: ELs (13.41%). Math SBAC data indicates the following need to raise the percentage of students who meet or exceed the standard from the following 2022-23 baseline: ELs (15.14%). 22-23 ELPAC making progress rate is 57.7%. 2022-23 reclassification rate is 20.7% Designated ELD (additional courses) - Provide a separate, additional classes for students who are in Transition English to teach the Standards for ELD (designated ELD)	$518,107.98	Yes

		- Support to secondary students who are English learners - Certificated salaries and related statutory benefits		
7	Interpreters for Second Language Learners	Interpreters (written and spoken) for Second Language Students, Parents, and Family Members - Continue to recruit and hire more classified staff who can provide interpretation services at all sites that have an English Learner Advisory Committee (ELAC), as well as to any District families who require translation - Translate documents for parents of English Language Learners	$70,000.00	Yes
8	Induction Professional Development Teacher on Special Assignment	New hires and teaching staff need support for entering into the workforce as well as a mechanism to finish their credentialing to be full-time, highly qualified, permanent teachers. Oftentimes times vacancies and new hires are positions that work with our most vulnerable populations, including English Learners and students experiencing homelessness. The teacher on Special Assignment will provide professional development services to induction teachers, focusing on the teaching and learning needs of unduplicated students. Attention will be given to the mastery of standards, engagement practices, monitoring, intervention services, assessments, and parent communication. The goal is twofold: to raise the level of instructional services provided by the teacher, with the additional benefit that students receive from better instructional practices that are consistently administered.	$30,600.00	Yes
9	Professional Development Day Costs for All Teachers (1 1/2 days)	LCFF Supplemental ($1,000,000) + LREBG Action ($750,000) The action being developed is based on the needs of English learners and socioeconomically disadvantaged students (low-income students). The following data set provides the reader with additional data for comparative purposes. ELA SBAC data indicates the following need to raise the percentage of students who meet or exceed the standard from the following 2022-23 baseline: All (58.43%); ELs (13.41%); SEDs (47.15%); Homeless (42.86%) Math SBAC data indicates the following need to raise the percentage of students who meet or exceed the standard from the following 2022-23 baseline: All (44.40%); ELs (15.14%); SEDs (32.74%); Homeless (28.58%) 22-23 ELPAC making progress rate is 57.7%. 2022-23 reclassification rate is 20.7% The focus of professional development is on the delivery of instruction and researched-based strategies to differentiate instruction for unduplicated student groups. English learners and low-income students will benefit from the focus on their instructional needs and the subsequent delivery of lessons by teachers. Additionally, learning recovery efforts to continue to be a focus for professional development opportunities as we remain focused on addressing gaps in learning through RTI, differentiated instruction, targeted scaffolding, and spiral review. The training will focus on dimensions of diversity, equity, and inclusion as they impact the teaching and learning of students who are low-income, experiencing homelessness, and English learners. Specific curricular supplemental resources, instructional strategies, monitoring systems, interventions, and outcomes will be components of the training. The goal of the training is to raise	$1,750,000.00	Yes

teaching and learning so that unduplicated students benefit from the work of the instructional staff in getting students more successful in their academic career while also attending to social-emotional learning.

Empowering Certificated Teachers and Instructional Aides Through Professional Development (Goal 1, Action 9)
To ensure that our English Learners and Long-Term English Learners (LTELs) receive the highest quality of cohesive support on their path to reclassification, the district is strategically utilizing Goal 1, Action 9 (Professional Development Days) to comprehensively train both our Certificated Teachers and our Elementary and Secondary ELD Instructional Assistants.

While instructional aides are funded through specific actions (Actions 1.3 and 1.19), Action 9 provides the dedicated, structured time necessary to equip all classroom educators with research-based ELD strategies and collaborative tools. This professional development will train staff to effectively support students through the following key focus areas:

1. Mastering the New Supplemental Curriculum
Both certificated classroom teachers and instructional aides will be trained on how to effectively utilize the newly purchased supplemental ELD curriculum. Certificated teachers will be trained on the pedagogical delivery and pacing of this vertically articulated curriculum, while instructional aides will learn how to seamlessly partner with the teacher to reinforce foundational language acquisition through targeted guided practice and small-group support.

2. Optimizing the Teacher-Aide Partnership
A critical component of this professional development is explicitly training certificated classroom teachers on how to best utilize and direct their instructional aides. Teachers will learn research-based co-teaching and delegation strategies to maximize the impact of their aides within the classroom. This ensures that instructional assistants are strategically deployed to provide targeted interventions for English Learners, rather than just offering generalized classroom help.

3. Supporting Integrated ELD in Core Content Areas
Because English Learners spend the majority of their day outside of explicit ELD classrooms, both teachers and aides require robust training on integrated ELD strategies. Action 9 will provide cross-training on how teacher-aide teams can effectively scaffold complex core content (such as Math, Science, and Social Studies). Staff will learn how to collaboratively utilize visual supports, reduce cognitive load, and clarify academic language in real-time so that students can access the core curriculum while acquiring English.

Expected Outcomes
By leveraging Action 9 to comprehensively train both our certificated teachers and instructional aides as a unified instructional team, Burbank Unified ensures that English Learners receive highly coordinated, high-quality support throughout their entire school day. Equipping our educators with these collaborative, research-based tools accelerates a student's progress toward reclassification and significantly reduces academic frustration—directly supporting our Differentiated Assistance goals of improving academic performance (Priority #4) and reducing chronic absenteeism and suspension rates (Priority #6) for our LTEL population.

To effectively address the evolving academic needs of our current student population—specifically our Long-Term English Learners (LTELs) and low-income students struggling to meet grade-level expectations—the District is strategically expanding Goal 1, Action 9 (Professional Development

Days for All Teachers and Staff).

Because base LCAP funding has not increased sufficiently over the past several years to sustain the costs of comprehensive, district-wide training, the District is allocating $750,000 in unspent Learning Recovery Block Grant (LRBG) funds to support this action for the 2026–2027 LCAP year, as well as the subsequent LCAP year.

Increasing Time and Reach for Comprehensive Training
Historically, professional development funding has been heavily constrained, limiting the amount of dedicated learning time and frequently restricting training to specific certificated groups. The infusion of the $750,000 LRBG allocation allows the district to significantly increase both the time and the reach of our professional development initiatives. This funding ensures we can sustain a robust day-and-a-half of targeted professional development and expand the reach to include all educators—both certificated classroom teachers and classified instructional staff (such as ELD Instructional Assistants). Learning recovery efforts will continue to be a focus for professional development opportunities as we remain focused on addressing gaps in learning through RTI, differentiated instruction, targeted scaffolding, and spiral review.

By training teaching teams collaboratively, we ensure that every adult interacting with our highest-need students is fully prepared to deliver cohesive, highly effective academic and behavioral interventions.

Research-Based Justification: The Best Use of Funds
Investing block grant funds directly into educator capacity is the most effective lever for accelerating student achievement. Educational research consistently demonstrates that collective teacher efficacy and high-quality Tier 1 classroom instruction are the most significant in-school factors impacting student learning outcomes.

Specifically regarding LTELs and socioeconomically disadvantaged students, research indicates that simply purchasing materials or providing isolated pull-out interventions is insufficient. Instead, students experiencing academic gaps require continuous access to highly trained educators who can provide:

Targeted Scaffolding: Teachers and aides trained to reduce cognitive load and provide real-time visual and linguistic supports so students can access complex, grade-level core content.

Integrated Language Development: Training staff on research-based integrated ELD strategies ensures that LTELs receive language support continuously throughout the day in math, science, and social studies, rather than just during a designated ELD block.

Responsive Pedagogy: Professional development equips staff with the instructional strategies necessary to identify specific academic barriers for low-income and English Learner students and pivot their instruction immediately to close those gaps.

By utilizing the LRBG funds to build adult capacity, the District is making a sustainable investment. While one-time materials eventually expire, the advanced pedagogical skills acquired by our teachers and staff will continue to benefit unduplicated students for years to come.

Monitoring Impact Through LCAP Metrics
To ensure the effectiveness of this $750,000 investment in professional development, the District

		will closely monitor the impact on our targeted student groups using the following specific data points identified in the Measuring and Reporting Results and Increased/Improved Services sections of the LCAP: Metrics 1.1–1.16 (CAASPP ELA & Math): We will monitor the direct impact of improved instructional practices on the academic growth of our unduplicated subgroups. Specifically, we will track the continued rebound and growth of CAASPP ELA and Math scores for our English Learners and Socioeconomically Disadvantaged (SED) students. Metrics 1.17–1.18 (ELPAC Progress & Reclassification Rates): By training all staff on ELD strategies and the new supplemental curriculum, we will measure success by tracking the progress of LTELs on the ELPAC and monitoring the district's overall reclassification rate (currently rebounding to 13.7%). Metrics 1.20–1.26 (Graduation Rates): As highly trained staff successfully engage and support struggling students, we will monitor the ultimate indicator of academic recovery: the sustained improvement of graduation rates for English Learners (currently at 94.5%) and socioeconomically disadvantaged students (currently at 96.8%).		
10	Elementary Response to Intervention for Reading/Language Arts, Math, and Socio-Emotional Learning (SEL)	The action being developed is based on the needs of English learners and socioeconomically disadvantaged students (low-income students). The following data set provides the reader with additional data for comparative purposes. ELA SBAC data indicates the following need to raise the percentage of students who meet or exceed the standard from the following 2022-23 baseline: All (58.43%); ELs (13.41%); SEDs (47.15%); Homeless (42.86%) Math SBAC data indicates the following need to raise the percentage of students who meet or exceed the standard from the following 2022-23 baseline: All (44.40%); ELs (15.14%); SEDs (32.74%); Homeless (28.58%) 22-23 ELPAC making progress rate is 57.7%. 2022-23 reclassification rate is 20.7% The data indicate that the needs of English learners and low-income students are significant. Intervention teachers and instructional assistants will: - Provide direct intervention to students at skill level provided by certificated classroom and intervention teachers using research-based materials - Utilize full-time curriculum specialists (at elementary) to provide direct support to students and manage the program - Utilize part-time intervention teachers and instructional assistants to provide direct support to students in ELA, Math, & SEL. - Provide direct intervention for underperforming students by certificated classroom and intervention teachers and instructional assistants - Utilize full-time curriculum specialists (at elementary) to provide direct support to students and manage the program - Utilize part-time intervention teachers and instructional assistants to provide direct support to students	$600,000.00	Yes

		- Create targeted Math Intervention sections at the middle schools - When the math intervention classes cannot be secured because of staffing, the budget funds can be used for aide support or supplemental materials. - Provide socio-emotional interventions for students identified as low-performing due to behavioral or social issues that impact their progress in academics. The outcome is to have students master State standards through the delivery of instruction that has high engagement practices, monitoring, assessments, and parent communication.		
11	Middle School School Psychologist (2.0 FTEs)	Approximately 40% of middle school students qualify for free/reduced lunch and about 20% of these same students experience a high rate of D/F grades. Additionally, about 10% of students in middle schools are English learners. These two psychologist positions serve all three unduplicated populations. They assess students, work with teachers to support the learning needs of students, provide professional development, consult with parents, and assist administrators. The work of the psychologists will help to lower the D/F rates of middle school students, increase attendance and increase test scores. The impact on English learners will be to maintain and increase performance on their daily work and the ELPAC.	$313,980.48	Yes
12	Behavior Specialists (9.0 FTEs)	Nine Behavior Specialists at schools will provide behavioral supports for low-income, students experiencing homelessness, and English learners. These Behavior Specialists will be working exclusively with the schools with high populations of targeted student subgroups. Anecdotal data indicates a rise in the number of students who have increasing behavior and academic needs. At the elementary level especially, the number of students requiring greater assistance has dramatically increased over the past three years going from one/two students in severe need to over 20 students across the district. These students are displaying major meltdowns and become physical to their peers and adults. Their parents are in crisis mode as they also want to work with their children and school staff. Behavior specialists work with teachers, instructional staff, administrators, and parents. Behavior specialists participate in student study teams, 504s, and Special Education. Supporting low-income, English learners and homeless youth will result in fewer outbursts, more focused students, greater attendance, and increased achievement as measured by SBAC data and attendance.	$984,168.42	Yes
13	English Learner Program, Supplemental Supports	There is a need to establish a baseline ELD program for students who are working towards English proficiency as English Learners. ELA SBAC data indicates the following need to raise the percentage of students who meet or exceed the standard from the following 2022-23 baseline: ELs (13.41%). Math SBAC data indicates the following need to raise the percentage of students who meet or exceed the standard from the following 2022-23 baseline: ELs (15.14%). 22-23 ELPAC making progress rate is 57.7%. 2022-23 reclassification rate is 20.7%	$513,398.64	Yes

		The program is designed to increase or improve services by: - Provide support for English Learner students in classes by Instructional Assistants - Provide supplemental materials and supplies to support site-based English Learner programs - Provide liaison support between the school and community for translation, parent contact, and parent education - Implement and monitor implementation of Master Plan for English Learners The work of instructional assistants paid by Maintenance of Effort funds provides support to teachers, instructional assistants and students will result in increases (or maintaining when at a high level like reclassification rate) in student achievement and teacher/instructional assistant effectiveness.		
14	Full Time Curriculum Specialists for nine elementary schools	The action being developed is based on the needs of English learners and socioeconomically disadvantaged students (low-income students). The following data set provides the reader with additional data for comparative purposes. ELA SBAC data indicates the following need to raise the percentage of students who meet or exceed the standard from the following 2022-23 baseline: All (58.43%); ELs (13.41%); SEDs (47.15%); Homeless (42.86%) Math SBAC data indicates the following need to raise the percentage of students who meet or exceed the standard from the following 2022-23 baseline: All (44.40%); ELs (15.14%); SEDs (32.74%); Homeless (28.58%) The Curriculum Specialists for nine of our elementary schools will increase or improve services through the following duties and tasks: Manage site assessments (including ELPAC) Manage and supervise site RTI program to support underperforming students Organize and conduct professional development Analyze data and review with staff Demonstrate lessons Provide direct intervention services to underperforming students in targeted subgroups including low-income students and English learners	$1,389,783.66	Yes
15	Library Coordinators at Elementary Schools	Provide focused services to English Learners, socioeconomically disadvantaged students, and students experiencing homelessness through the services that they provide. Services include a concentration on literacy-based skills, phonics, word recognition, comprehension, and other age-appropriate literacy standards. Stock and weed collections Manage information systems Manage school-wide Accelerated Reader Program Provide direct services to classes and targeted subgroup students Provide after-school access to the library for targeted subgroup students	$433,609.14	Yes
16	Targeted support for Twice Exceptional students who qualify as GATE and are included in the	BUSD believes in learning beyond the core curriculum by providing GATE enrichment activities and opportunities for unduplicated student groups who may not have access outside of school due to the cost of a program and other restrictions. The LCAP committee identified a need to provide activities during and after school hours in the area of GATE to connect students to school,	$70,000.00	Yes

	unduplicated count	create positive experiences, and develop connections with adults. This action provides improved and increased services principally directed toward unduplicated students who may not be exposed to GATE activities due to their home environment or financial constraints. This budgeted expenditure is to cover partial costs of the GATE program for students who are English learners and low-income students. This is an increased service to these unduplicated student groups as they benefit from participating in the GATE program and are challenged by the activities implemented through the program. Researchers have identified several barriers to student participation, ranging from the more tangible, including family or work responsibilities, limited resources for equipment or other expenses, and transportation or other logistical difficulties, to the more complex, such as lack of interest in or alienation from school and its activities (Kleese and D'Onofrio, 1994). Involvement in extracurricular activities also helps at-risk students. John Mahoney and Robert Cairns (1997) indicated that engagement in school extracurricular activities is linked to decreasing rates of early school dropouts in both boys and girls.		
17	Elementary Assistant Principals (Miller & Jefferson 2.0)	The action being developed is based on the needs of English learners and socioeconomically disadvantaged students (low-income students). The following data set provides the reader with additional data for comparative purposes. ELA SBAC data indicates the following need to raise the percentage of students who meet or exceed the standard from the following 2022-23 baseline: All (58.43%); ELs (13.41%); SEDs (47.15%); Homeless (42.86%) Math SBAC data indicate the following need to raise the percentage of students who meet or exceed the standard from the following 2022-23 baseline: All (44.40%); ELs (15.14%); SEDs (32.74%); Homeless (28.58%) The Assistant Principal at our two largest elementary schools will increase or improve services through the following duties and tasks: Manage site assessments (including ELPAC) Manage and supervise site RTI program to support underperforming students Organize and conduct professional development Analyze data and review with staff Demonstrate lessons Provide direct intervention services to underperforming students in targeted subgroups, including low-income students and English learners.	$273,446.70	Yes
18	Secondary Sheltered ELD Sections (Social Studies and Science)	The action being developed is based on the needs of English learners. The following data set provides the reader with additional data for comparative purposes. ELA SBAC data indicates the following need to raise the percentage of students who meet or exceed the standard from the following 2022-23 baseline: ELs (13.41%). Math SBAC data indicates the following need to raise the percentage of students who meet or exceed the standard from the following 2022-23 baseline: ELs (15.14%). 22-23 ELPAC making progress rate is 57.7%. 2022-23 reclassification rate is 20.7% Secondary Sheltered ELD Sections are designed to reduce class size or dedicate sheltered sections for ELD students in the subjects of Social Science and Science. These subjects are	$519,725.70	Yes

		language intensive subjects that require additional support from instructional staff to provide small group instruction and/or differentiation. Smaller class sized or dedicated sections will allow for teaching staff to better support english learners in these core subject areas.		
19	ELD Instructional Assistants, Secondary (5 FTE)	The action being developed is based on the needs of English learners. The following data set provides the reader with additional data for comparative purposes. ELA SBAC data indicates the following need to raise the percentage of students who meet or exceed the standard from the following 2022-23 baseline: ELs (13.41%). Math SBAC data indicates the following need to raise the percentage of students who meet or exceed the standard from the following 2022-23 baseline: ELs (15.14%). 22-23 ELPAC making progress rate is 57.7%. 2022-23 reclassification rate is 20.7% English Language Development Instructional Assistants - Provide additional hourly support in E/LA and ELD at the secondary level - Work with small groups of students to allow for differentiation and Tier II intervention - Assist teachers in the implementation of the ELD program - Assist teachers in the implementation of the RtI program The work of ELD instructional assistants provides support to teachers and students will result in increases (or maintaining when at a high level like reclassification rate) in student achievement and teacher/instructional assistant effectiveness on ELA and math SBAC. Addressing Differentiated Assistance for Long-Term English Learners (LTELs) As part of the District's strategic response to Year 2 Differentiated Assistance for our Long-Term English Learner (LTEL) student group, we have explicitly refined Goal 1, Action 19 (Secondary ELD Instructional Assistants) to clarify exactly who is doing what for whom. Who: Secondary ELD Instructional Assistants. Is Doing What: Providing highly targeted academic interventions and focused instructional support specifically within designated ELD classrooms. To ensure maximum effectiveness, these instructional aides will participate in dedicated professional development time where they will be explicitly trained on supportive mechanisms, the newly adopted secondary supplemental ELD curriculum, and advanced ELD instructional strategies tailored for older students. For Whom: Secondary Long-Term English Learners (LTELs) and older students at risk of becoming LTELs who are currently receiving instruction in designated ELD classrooms. Expected Outcomes and Dashboard Alignment This action will be specifically utilized to support secondary LTELs in accelerating their active performance on various state and local assessments, ultimately helping them overcome the specific hurdles to reclassification and successfully transition into mainstream English Language Arts classrooms.	$846,673.44	Yes

		By utilizing highly trained instructional aides to provide accessible, sequentially supportive academic interventions right inside the ELD classroom, the district aims to reduce the profound student frustration and disengagement often experienced by secondary LTELs. Therefore, this direct academic support acts as a critical lever to address the specific Differentiated Assistance dashboard indicators: it will improve overall student performance in ELA and Math (Priority #4), while simultaneously increasing school connectedness and engagement to help reduce chronic absenteeism and suspension rates (Priority #6) for our vulnerable secondary LTEL population.		
20	Culturally Responsive Pedagogy PD (K-12 PLCs in ELA & Math)	The action being developed is based on the needs of English learners and socioeconomically disadvantaged students (low-income students). The following data set provides the reader with additional data for comparative purposes. ELA SBAC data indicates the following need to raise the percentage of students who meet or exceed the standard from the following 2022-23 baseline: All (58.43%); ELs (13.41%); SEDs (47.15%); Homeless (42.86%) Math SBAC data indicates the following need to raise the percentage of students who meet or exceed the standard from the following 2022-23 baseline: All (44.40%); ELs (15.14%); SEDs (32.74%); Homeless (28.58%) 22-23 ELPAC making progress rate is 57.7%. 2022-23 reclassification rate is 20.7% The data indicate that the needs of English learners and low-income students are significant. Culturally Responsive Pedagogy PD will create time and space for teachers to work in professional learning communities with identified lead teachers, site administration, and district administration. Collaboration will be focused on instructional practices including our district work in diversity, equity, and inclusion as well as the following: - Equity in grading - Best practices in culturally relevant instruction - Research interventions - The DuFour's essential questions for professional learning communities - Local data from formative assessments and district benchmarks - Plan-Do-Study-Act Cycles	$150,000.00	Yes
21	RTI Assessment Programs (i-Ready Assessment & School City)	The action being developed is based on the needs of English learners and socioeconomically disadvantaged students (low-income students). The following data set provides the reader with additional data for comparative purposes. ELA SBAC data indicates the following need to raise the percentage of students who meet or exceed the standard from the following 2022-23 baseline: All (58.43%); ELs (13.41%); SEDs (47.15%); Homeless (42.86%) Math SBAC data indicates the following need to raise the percentage of students who meet or exceed the standard from the following 2022-23 baseline: All (44.40%); ELs (15.14%); SEDs (32.74%); Homeless (28.58%) 22-23 ELPAC making progress rate is 57.7%.	$200,000.00	Yes

		2022-23 reclassification rate is 20.7% The data indicate that the needs of English learners and low-income students are significant. RTI Assessment Programs will provide students, staff, and families with performance data to make data-driven decisions regarding interventions for individual, small-group, and whole-group instructional practices. Data will be used to guide professional learning community work in course-alike cohorts as well as grade-level cohorts. Local data is essential in meeting the local indicators on the CA Dashboard. These local assessments will help measure the successful implementation of California State Standards.		
22	Outdoor Science School Support Funding	The action being developed is based on the needs of English learners and socioeconomically disadvantaged students (low-income students). The following data set provides the reader with additional data for comparative purposes. ELA SBAC data indicates the following need to raise the percentage of students who meet or exceed the standard from the following 2022-23 baseline: All (58.43%); ELs (13.41%); SEDs (47.15%); Homeless (42.86%) Math SBAC data indicates the following need to raise the percentage of students who meet or exceed the standard from the following 2022-23 baseline: All (44.40%); ELs (15.14%); SEDs (32.74%); Homeless (28.58%) CAST (Science) Data indicates the following need to raise the percentage of students who meet or exceed the standard from the following 2023-24 baseline in 5th grade: All (45.94%) ; ELs, (4.39%); SEDs (31.37%); Homeless (**%) The 2022-23 reclassification rate is 20.7% The data indicate that the needs of English learners and low-income students are significant. Exposure to outdoor science will increase interest and motivation to improve mastery in the subject of science. The Outdoor Science School gives students opportunities to experience science firsthand that cannot be replicated in a standard classroom. The outcome is to have students master State standards through the delivery of instruction that has high engagement practices, monitoring, assessments, and parent communication.	$20,000.00	Yes
23	GATE Program Annual Identification Assessment Process	- Provide training for teachers and administrators on the CogAT-7 GATE identification instrument - Purchase CogAT-7 assessments for all 3rd grade students and nominated/recommended students at other grade levels - Fund additional psychologist time for students who qualify to take the WISC-V or WNV assessments - Provide extra duty for teacher test administrators State of California Priorities: Priority One: Basic (Conditions of Learning) Priority Two: State Standards (Conditions of Learning) Priority Three: Parental Involvement (Engagement) Priority Four: Pupil Achievement (Pupil Outcomes) Priority Five: Pupil Engagement (Engagement)	$20,000.00	No

		Priority Seven: Course Access (Conditions of Learning) BUSD Board of Education Goal 1: Students will be career/college ready via high-quality instruction		
24	District GATE Coordinator	Provide one (0.2 FTE) certificated teacher to coordinate and support the District's GATE program	$25,658.00	No
25	Music Instrument Repair and Replacement	- Provide funding to all secondary school sites for instrumental repair and replacement - Repair or replace damaged or worn-out instruments State of California Priorities: Priority One: Basic (Conditions of Learning) Priority Two: State Standards (Conditions of Learning) Priority Four: Pupil Achievement (Pupil Outcomes) Priority Five: Pupil Engagement (Engagement) Priority Seven: Course Access (Conditions of Learning) BUSD Board of Education Goal 1: Students will be career/college ready via high-quality instruction	$20,000.00	No
26	Secondary Art Supplies and Materials	- Provide additional funding for visual arts classes - Increase available art supplies and materials for students - Replace damaged or worn-out art supplies and materials State of California Priorities: Priority One: Basic (Conditions of Learning) Priority Two: State Standards (Conditions of Learning) Priority Four: Pupil Achievement (Pupil Outcomes) Priority Five: Pupil Engagement (Engagement) Priority Seven: Course Access (Conditions of Learning) BUSD Board of Education Goal 1: Students will be career/college ready via high-quality instruction	$12,600.00	No
27	Provide support for students with disabilities to achieve their Individual Education Plan (IEP) goals.	This budgeted expenditure includes all of the salaries and benefits for Special Education Services across the District. This Special Education expenditure also includes non-public school, contracted services, plus supplies and services, transportation, and instructional assistant personnel. State of California Priorities: Priority One: Basic (Conditions of Learning) Priority Two: State Standards (Conditions of Learning) Priority Three: Parental Involvement (Engagement) Priority Four: Pupil Achievement (Pupil Outcomes) Priority Five: Pupil Engagement (Engagement) Priority Seven: Course Access (Conditions of Learning) BUSD Board of Education Goal 1: Students will be career/college ready via high-quality instruction	$39,217,554.00	No
28	Elementary Music	Elementary music teachers will:	$537,498.00	No

	Teachers Staffing	- Provide weekly music instruction - Annually determine the grade level that will be served for music instruction based on financial conditions - Increase when [possible the instructional minutes for elementary music Im-plement components of the District's Arts for All Plan State of California Priorities: Priority One: Basic (Conditions of Learning) Priority Two: State Standards (Conditions of Learning) Priority Three: Parental Involvement (Engagement) Priority Four: Pupil Achievement (Pupil Outcomes) Priority Five: Pupil Engagement (Engagement) Priority Seven: Course Access (Conditions of Learning) BUSD Board of Education Goal 1: Students will be career/college ready via high-quality instruction		
29	Provide CTE Pathway offerings to Secondary Students	Provide instruction, course offerings, and appropriate staffing to maintain current CTE Pathways. Provide Instructional Materials for CTE courses. Povide licenses and membership fees associated with CTE courses.	$1,269,998.00	No
30	World Language Courses at Middle Schools	- Maintain Spanish 1 classes at each middle school - Provide students with one-year completion to meet UC/CSU A-G requirement for work language - Allow students to continue work language instruction upon entering high school State of California Priorities: Priority One: Basic (Conditions of Learning) Priority Two: State Standards (Conditions of Learning) Priority Three: Parental Involvement (Engagement) Priority Four: Pupil Achievement (Pupil Outcomes) Priority Five: Pupil Engagement (Engagement) Priority Seven: Course Access (Conditions of Learning) BUSD Board of Education Goal 1: Students will be career/college ready via high-quality instruction	$399,101.00	No

Goal

Goal #	Description	Type of Goal
2	Students will be physically, emotionally, and mentally healthy and supported through Parental Involvement as measured by State, federal, and District assessment tools including the California Dashboard. (Educational Services) State of California Priorities: Priority One: Basic (Conditions of Learning) Priority Two: State Standards (Conditions of Learning) Priority Three: Parental Involvement (Engagement) Priority Four: Pupil Achievement (Pupil Outcomes) Priority Five: Pupil Engagement (Engagement) Priority Six: School Climate (Engagement) Priority Seven: Course Access (Conditions of Learning) Priority Eight: Other Pupil Outcomes (Pupil Outcomes)	Broad Goal

State priorities addressed by this goal.

1, 2, 3, 4, 5, 6, 7, 8

An explanation of why the LEA has developed this goal.

Goal 2 was created to ensure the students in Burbank Unified School District are in a learning environment that is safe. Students will not be able to engage in academic discourse if they do not feel safe physically or emotionally. Therefore, the mental health and wellness of students are addressed in this goal, included but not limited to:

- Access to more psychologists
- Access to intervention specialists
- Access to behavior specialists
- Access to intervention counselors
- Access to mental health and wellness center
- Access to more nurses
- Implementation of PBIS
- Inclusion of parental involvement

Metrics for this goal will measure the completion of requirements to graduate from high school. We will closely monitor identified subgroups to make sure the graduation rate increases appropriately based on historic performance and/or achievement gaps. Additionally, survey results and other measures will help us identify areas where students may disengage with school such as attendance, behaviors, or perceptions towards staff, and school climate.

Measuring and Reporting Results

Metric #	Metric	Baseline	Year 1 Outcome	Year 2 Outcome	Target for Year 3 Outcome	Current Difference from Baseline
1	Percentage of students completing the A-G requirements. The completion rate will increase by 2% percentage points per year until students reach the highest level of performance as reported on the California Dashboard.	In 2022-2023, 48.0% of high school students met A-G completion rate	In 2023-2024 47.1% of high school students met A-G completion requirements	In 2024-2025, 49.2% of high school students met A-G completion requirements	All students who meet A-G requirements will increase by 6 percentage points by year 3.	The percentage of students completing the A-G requirements increased by 1.2%
2	Graduation Rate for All Students will increase by 1 percentage point over 3 years as reported on the California Dashboard.	In 2022-2023 93.2% of All Students were graduated from high school	In 2023-2024 96.3% of All Students were graduated from high school	In 2024-2025, the District-wide graduation rate was 97.4% for all students. Monterey – 98.4%	All Students who are graduated from high school will increase by 1 percentage points by year 3.	The graduation Rate for All Students increased by 4.2%

3	Graduation Rate of English Learners will increase by 2 percentage points over 3 years as reported on the California Dashboard.	In 2022-2023, 80.6% of English Learners were graduated from high school	In 2023-2024, 91.3% of English Learners graduated	In 2024-2025, 95.6% of English Learners graduated	English Learners who are graduated from HS will increase by 2 percentage points by year 3.	The graduation Rate of English Learners increased by 15.0%
4	Graduation Rate of Socio-Economically Disadvantaged Students will increase by 2 percentage points over 3 years as reported on the California Dashboard.	In 2022-2023, 91.0% of Socio-economically Disadvantaged Students were graduated from high school	In 2023-2024, 95.1% of Socio-economically Disadvantaged Students graduated	In 2024-2025, 95.5% of Socio-economically Disadvantaged Students graduated Monterey 97.8%	Socio-economically Disadvantaged Students who graduate from HS will increase by 2 percentage points by year 3.	The graduation Rate of Socio-Economically Disadvantaged Students increased by 4.5%
5	Graduation Rate for Homeless Students will increase by 2 percentage points over 3 years as reported on the California Dashboard.	In 2022-2023, 90.9% of Homeless Students were graduated from high school	In 2023-2024, 85.2% of Homeless Students graduated	In 2024-2025, 95.2% of Homeless Students graduated	Homeless Students who are graduated from high school will increase by 1 percentage points by year 3.	The graduation Rate for Homeless Students increased by 4.3%

6	Graduation Rate for Foster Youth will increase by 1 percentage points over 3 years as reported on the California Dashboard.	In 2022-2023, 12 out of 16 Foster Youth graduated (Local SIS Data)	In 2023-2024, 9 out of 11 Foster Youth graduated (Local SIS Data)	In 2024-2025, 10 out of 11 Foster Youth graduated (Local SIS Data)	Foster Youth who are graduated from high school will increase by 1 percentage points by year 3.	The graduation Rate for Foster Youth increased from 75% to 91%, an increase of 16% based on local SIS Data
7	Graduation Rate for Students with Disabilities will increase by 2 percentage points over 3 years as reported on the California Dashboard.	In 2022-2023, 88.3% of Students with Disabilities were graduated from high school	In 2023-2024, 88.3% of Students with Disabilities graduated	In 2024-2025, 89.8% of Students with Disabilities graduated	Students with Disabilities who are graduated from high school will increase by 2 percentage points by year 3.	The graduation Rate for Students with Disabilities increased by 1.5%
8	Graduation Rate for Hispanic Students will increase by 1 percentage points over 3 years as reported on the California Dashboard.	In 2022-2023, 94.0% of Hispanic Students were graduated from high school	In 2023-2024, 96.0% of Hispanic Students graduated	In 2024-2025, 97.0% of Hispanic Students graduated	Hispanic Students who are graduated from high school will increase by 1 percentage points by year 3.	The graduation Rate for Hispanic Students increased by 3.0%

9	Suspension Rate District wide will be maintained or at least decrease by 1 percentage point over 3 years as reported on the California Dashboard.	In 2022-2023, 3.2% of students were suspended at least once	In 2023-2024, 2.7% of students were suspended at least once	In 2024-2025, 2.5% of students were suspended at least once	Decrease suspension rate by 1% district wide or maintain Green or advance to Blue on the Dashboard	The suspension Rate District wide declined by 0.7%
10	School Attendance Rate will increase by 1 percentage point over 3 years as reported on the California Dashboard/Data Quest.	In 2022-2023, the attendance rate was 91.71%	In 2023-2024, the attendance rate was 93.0%	In 2024-2025, the attendance rate was 94.2%	School attendance rate will increase by 1 percentage points by year 3.	School Attendance Rate increased by 2.49%
11	Chronic Absenteeism Rate will decrease by 9 percentage points over 3 years as reported on the California Dashboard.	18.9% of students are chronically absent in 2022-2023 (Dashboard)	In 2023-2024, 13.4% of students are chronically absent (Dashboard)	In 2024-2025, 11.8% of students are chronically absent (Dashboard)	Chronic absenteeism decreaes by 9 percentage points by year 3 or maintain Green level or Blue level on CA Dashboard indicator.	The Chronic Absenteeism Rate decreased by 7.1%

12	Four Year Adjusted Cohort Graduation Rate will increase by 1 percentage point over 3 years as reported on the California Dashboard/Data Quest.	In 2022-2023, the four year adjusted cohort graduation rate was reported as 93.2%	In 2023-2024, the four-year adjusted cohort graduation rate was reported as 96.2%	In 2024-2025, the four-year adjusted cohort graduation rate was reported as 97.4% (Dataquest).	The four-year adjusted cohort graduation will increase by 1 percentage points by year 3.	The Four Year Adjusted Cohort Graduation Rate increased by 4.2%
13	Middle School Drop Out Rate will remain at 0% annually as reported by our local student information system (AERIES) and CALPADS.	In 2022-2023, Middle school dropout rate remains at 0% (CALPADs)	In 2023-2024, middle school dropout rate remains at 0% (CALPADs)	In 2024-2025, middle school dropout rate remains at 0% (CALPADs)	Middle school dropout rate will be maintined at 0%	The Middle School Drop Out Rate remains unchanged
14	Percent of Student Expulsions from the District will reduce/maintain at a rate lower than the state on an annual basis as reported on the California Dashboard.	In 2022-2023, no students were expelled from the District (CALPADs)	In 2023-2024, no students were expelled from the District (CALPADs)	In 2024-2025, no students were expelled from the District (CALPADs)	Student Expulsions from the District will be maintained at a rate lower than the state on an annual basis	The percent of Student Expulsions from the District remains unchanged

15	Survey and other local measures of pupils, parents, and staff, on the sense of safety will improve by 6 percentage points over 3 years.	In 2022-2023, School Satisfaction Survey analysis indicated the following: Children are safe at school - Staff - 76%; Students - 60%; Parents - 73%	In 2023-2024, School Satisfaction Survey analysis indicated the following: Children are safe at school - Staff - 80%; Students - 59%; Parents - 79%	In 2024-2025, School Satisfaction Survey analysis indicated the following: Children are safe at school - Staff - 82%; Students - 74%; Parents - 84%	Pupils, parents, and staff, sense of safety will increase by 6 percentage points by year 3.	Survey and other local measures of pupils, parents, and staff, on the sense of safety changed as follows: Staff increased by 6%; Students increased by 14%; Parents increased 11%
16	Surveys of pupils, parents, and staff, on the sense of care will improve by 6 percentage points over 3 years	In 2022-2023, School Satisfaction Survey analysis indicated the following: School is a positive and supportive learning environment: Staff - 82%; Students - 64%; Parents: 75%	In 2023-2024, School Satisfaction Survey analysis indicated the following: School is a positive and supportive learning environment: Staff - 89%; Students - 57%; Parents: 79%	In 2024-2025, School Satisfaction Survey analysis indicated the following: School is a positive and supportive learning environment: Staff - 83%; Students - 70%; Parents: 79%	Pupils, parents, and staff sense of care will improve by 6 percentage points by year 3.	Surveys of pupils, parents, and staff, on the sense of care changed as follows: Staff increased by 1%; Students increased by 6%; Parents increased by 4%
17	Surveys of pupils, parents, and staff, on the sense of connectedness will improve by 6 percentage points over 3 years.	In 2022-2023, School Satisfaction Survey analysis indicated the following: We treat each other with respect: Staff - 72%; Students - 65%; Parents - 82%	In 2023-2024, School Satisfaction Survey analysis indicated the following: We treat each other with respect: Staff - 88%; Students - 64%; Parents - 78%	In 2024-2025, School Satisfaction Survey analysis indicated the following: We treat each other with respect: Staff - 85%; Students - 79%; Parents - 80%;	Pupils, parents, and staff sense of connectedness will improve by 6 percentage points by year 3.	Surveys of pupils, parents, and staff, on the sense of connectedness changed as follows: Staff increased by 13%; Students increased by 14%; Parents decreased by 2%.

Goal Analysis for 2025-2026

An analysis of how this goal was carried out in the previous year.

A description of overall implementation, including any substantive differences in planned actions and actual implementation of these actions, and any relevant challenges and successes experienced with implementation.

Overall Implementation & Successes The overall implementation of all actions in Goal 2 during the 2025–2026 school year reflected the District's continued commitment to

student wellness and our evolving, data-informed approach to supporting physical, emotional, and mental health. Following comprehensive evaluations with our educational partners during the previous cycle, 2025-2026 served as the foundational year for our strategic pivot toward more proactive, school-based mental health and behavioral supports. Overall, implementation was highly successful, and educational partners have agreed to "stay the course" with our current actions and budget.

A major success of this year's implementation was the successful rollout of the newly established Elementary Wellness and Behavior Specialists (3 FTE) (Action 2.4). Having transitioned away from the previous model of broad academic intervention specialists, these new roles were embedded across school sites to provide more of a case management approach. This targeted approach has yielded positive early indicators in managing extreme behavioral outbursts and improving school climate.

Other successes include the continued effectiveness of the SOAR program (Action 2.7) in its second year, which successfully maintained its staffing and behavioral support structures to serve students with intensive needs. Similarly, Monterey High School (Action 2.1) was successfully supported with 5.0 FTEs, underscoring its immense value in providing credit recovery and graduation pathways for an enrollment primarily comprised of unduplicated students. Furthermore, the district successfully administered the Hanover School Climate & Mental Health Surveys (Action 2.6) during the Fall and Spring windows to capture vital, anonymous feedback from educational partners.

These systemic successes are becoming evident in our local and state metrics. Chronic absenteeism, which had previously decreased to 13.4% in 2023-2024, has continued to decline at 11.8% according to the 2025 California Dashboard. Suspension rates have also declined at 2.5%. Furthermore, graduation rates for English Learners and socioeconomically disadvantaged students have continued to rise significantly, indicating that this broader system of holistic support is contributing directly to long-term academic and social success (Actions 2.1, 2.2, 2.3, and 2.5).

Challenges and Substantive Differences Because the 2025-2026 LCAP was heavily vetted and restructured to match current realities, the actions in Goal 2 were executed with a high degree of fidelity to the plan, resulting in very few substantive differences. The District successfully discontinued the extra research expenses previously utilized for care center evaluations through Hanover, redirecting those funds to sustain direct services, exactly as planned.

However, relevant challenges were still experienced during implementation. While the new Elementary Wellness and Behavior Specialists were successful, initial challenges arose in managing high caseloads across multiple sites as well as placement decisions of which sites they would support based on a distribution of students in need of caseload management. Despite these logistical challenges, the District's adaptive, student-centered approach ensured that critical services reached our most vulnerable populations.

Specific Actions: * Action 2.1 – Monterey Teachers (5.0 FTEs)

Implementation: Fully implemented. (Note: FTE updated to 5.0 based on 25-26 mid-year projections).

Targeted subgroups: Low Income, English Learners, Foster/Homeless Youth

Analysis: Successfully supported credit recovery and graduation success for unduplicated students at Monterey High School through small group instruction, flexible scheduling, and individualized academic support.

Action 2.2 – Family Services Agency of Burbank (FSA) Counseling Program

Implementation: Fully implemented with minor adjustments based on specific site needs.

Targeted subgroups: Low Income, English Learners, Foster/Homeless Youth

Analysis: Effectively provided vital mental health services for students lacking access outside of school; improved emotional safety, attendance, and academic engagement.

Action 2.3 – Secondary Summer School Credit Recovery

Implementation: Fully implemented with a focus on supporting students taking courses through surrounding organizations and platforms (e.g., Apex).

Targeted subgroups: Low Income, English Learners, Foster/Homeless Youth

Analysis: Offered crucial credit recovery in core subjects for students who previously failed courses; helped maintain graduation eligibility and actively reduced dropout risks.

Action 2.4 – Elementary Wellness & Behavior Specialists (3.0 FTE)

Implementation: Fully implemented as a newly redesigned action for 25-26.

Targeted subgroups: Low Income, English Learners, Foster/Homeless Youth

Analysis: Replaced the previous academic intervention model to directly address behavioral challenges and emotional regulation. By focusing on school-based mental health, character building, and crisis response, these specialists successfully improved student engagement and school climate.

Action 2.5 – Homeless/Foster/At-Risk Youth Specialist (0.5 FTE)

Implementation: Fully implemented with consistent practices and cross-agency communication.

Targeted subgroups: Foster Youth, Homeless Students

Analysis: Provided essential advocacy, attendance monitoring, and individualized support for accessing academic programs; significantly improved resource coordination for the District's most vulnerable students.
Action 2.6 – School Climate & Mental Health Surveys (Hanover)
Implementation: Fully implemented according to the planned Fall 2024 and Spring 2025 timelines.
Targeted subgroups: Low Income, English Learners, Foster/Homeless Youth
Analysis: Collected anonymous feedback from students, families, and staff; informed district planning and accurately measured growth in school climate and mental health metrics.
Action 2.7 – Partial SOAR Program Staffing (CDS) (1 teacher; 1 para; 2 specialists)
Implementation: Fully implemented with minor ongoing refinements as the program entered its second year.
Targeted subgroups: Low Income, English Learners, Foster/Homeless Youth
Analysis: Successfully supported alternative education for students with significant behavioral challenges; provided small class sizes, individualized instruction, behavioral interventions, and vital case management across secondary sites.

An explanation of material differences between Budgeted Expenditures and Estimated Actual Expenditures and/or Planned Percentages of Improved Services and Estimated Actual Percentages of Improved Services.

Summary: Overall, the district experienced a net underspending of approximately $41,974 for Goal 2 contributing initiatives. This variance was largely driven by a mix of staffing-related shifts, such as lower salary placements and unfilled positions in some programs, offset by higher salary placements and increased staffing costs in other specialized areas. The most significant underspending occurred in Secondary Summer School Credit Recovery (Action 2.3), which saw expenditures come in $76,000 under budget due to fewer sections being needed as a result of successful credit recovery during the regular school year, along with the use of site funds that didn't require district supplemental support. Other areas with lower-than-expected expenditures included Partial SOAR Program Staffing and School Climate & Mental Health Surveys.
Conversely, some areas saw higher-than-anticipated costs. Notably, expenditures increased for Elementary Wellness & Behavior Specialists, Monterey Teachers, and the Homeless/Foster/At-Risk Youth Specialist. These increases were primarily attributed to higher salary placements for highly qualified hires and necessary adjustments to ensure continuity of specialized student support services.
Despite these fluctuations, the district maintained its commitment to the core objectives of Goal 2: supporting the physical, emotional, and mental health of students and providing targeted behavioral interventions. The adjustments made reflect a responsive approach to evolving needs, balancing fiscal responsibility with the goal of sustaining and improving wellness and educational outcomes for unduplicated students.
Analysis: Staff salaries and benefits were higher than anticipated due to the retention of highly experienced personnel and step increases on the salary schedule.
Action 2.3 – Secondary Summer School Credit Recovery
Variance: Decrease in expenditures (Planned: $100,000 | Actual: $24,000).
Targeted subgroups: Low Income, English Learners.
Analysis: Expenditures were significantly lower due to a reduction in the number of required sections, as well as the utilization of alternate grant funding to cover a portion of the operational costs.
Action 2.4 – Elementary Wellness & Behavior Specialists (3 FTE)
Variance: Increase in expenditures (Planned: $264,580 | Actual: $328,953).
Targeted subgroups: Low Income, English Learners, Foster Youth.
Analysis: The district retained highly qualified specialists to fill these critical new roles; staff salaries were higher than anticipated due to advanced placement on the salary scale.

A description of the effectiveness or ineffectiveness of the specific actions to date in making progress toward the goal.

Summary: The evaluation of Goal 2, which focuses on supporting the physical, emotional, and mental health of students, reveals a highly encouraging picture of progress within the Burbank Unified School District (BUSD). During the 2025–2026 school year, the District fully realized a strategic pivot away from broad academic interventions toward targeted, proactive, school-based mental health and behavioral supports. A thorough analysis of our metrics and implementation data indicates that this philosophical shift was highly effective in addressing the evolving needs of our student populations.

During the 2025–2026 cycle, BUSD committed substantial supplemental funding toward Goal 2 initiatives. These included expanded support for Monterey High School teachers (Action 2.1), the Family Services Agency (FSA) counseling program (Action 2.2), secondary summer school credit recovery (Action 2.3), and the newly designed Elementary Wellness and Behavior Specialists (Action 2.4). Because the 2025-2026 LCAP was heavily vetted and restructured to remove previously ineffective actions (such as the former 11 FTE Academic Intervention Specialists), the updated suite of actions has yielded measurable and positive outcomes.

A particularly notable success from the 2025–2026 plan was the implementation of the three Elementary Wellness and Behavior Specialist positions (Action 2.4), budgeted at $324,429. This strategic pivot directly addressed the reality that extreme emotional and behavioral challenges often underlie academic struggles. By shifting resources to highly trained behavioral specialists, the District effectively took a progressive step in curtailing extreme behavioral outbursts, supporting emotional regulation, and providing critical crisis response across elementary sites.

Other actions under Goal 2 continued to demonstrate clear effectiveness. Monterey Teachers (Action 2.1) received sustained funding for 5.0 FTEs, proving invaluable in supporting credit recovery and driving up graduation rates for a student body largely comprising unduplicated pupils. The SOAR program (Action 2.7), entering its second year of implementation, also proved effective as a critical alternative education setting for students requiring intensive behavioral interventions.

To assess the broader effectiveness of these actions, BUSD continues to closely monitor local and state metrics. Chronic absenteeism, which had previously decreased to 13.4% in 2023-2024, has continued to decline at 11.8% according to the 2025 California Dashboard. Suspension rates have also declined at 2.5%. Furthermore, graduation rates for key subgroups such as English Learners and socioeconomically disadvantaged students have continued to rise. The graduation rate for homeless students, which had previously declined, has shown signs of stabilization and improvement to 95.2%, indicating that the targeted advocacy provided by the Homeless/Foster/At-Risk Youth Specialist (Action 2.5) is making a positive impact.

In summary, the actions taken under Goal 2 during the 2025–2026 school year were highly effective. The District's focused approach on behavioral health and wellness supports is exceptionally well-aligned with our evolving understanding of student needs. Because these actions are working as anticipated, BUSD educational partners have agreed to continue actions for the 2026–2027 plan, allowing these vital support systems to fully mature and continue fostering a responsive, safe, and engaging educational environment for all students.

Specific Actions:

Action 2.1 – Monterey Teachers (5.0 FTEs)

Effective (Metrics 2.2–2.8 & 2.12: Graduation Rates). Successfully supported credit recovery, engagement, and graduation success for unduplicated students at Monterey High School through smaller learning environments. Overall graduation rates reached 97.4%, with English Learners consistently increasing to 94.5% and socioeconomically disadvantaged students increasing to 96.8%, demonstrating effective increased services for these target groups.

Action 2.2 – Family Services Agency of Burbank (FSA) Counseling Program

Effective (Metrics 2.10, 2.11, 2.12, 2.13, 2.16, & 2.17: Attendance, Discipline, & School Climate). Significantly expanded access to necessary mental health services; directly improved emotional safety, attendance, and academic engagement for unduplicated students. This targeted support contributed to a significant decrease in chronic absenteeism (improving from an 18.9% baseline down to 13.4%) and a decline in overall suspension rates, highlighting the positive impact on school climate for vulnerable subgroups.

Action 2.3 – Secondary Summer School Credit Recovery

Effective (Metrics 2.2–2.8 & 2.12: Graduation Rates). Provided crucial credit recovery opportunities in core subjects; successfully supported graduation eligibility and dropout prevention for students who had previously failed courses. This supplemental intervention directly contributed to the overall graduation rate increasing to 97.4% and the socioeconomically disadvantaged graduation rate rising to 96.8%.

Action 2.4 – Elementary Wellness & Behavior Specialists (3.0 FTEs)

Effective (Metrics 2.9–2.14: Discipline & School Climate). Successfully replaced the former academic intervention model to directly address severe behavioral challenges and emotional dysregulation. These specialized staff members effectively improved school climate, reduced extreme behavioral incidents, and provided essential crisis response, supported by declining suspension and expulsion rates across elementary sites for unduplicated pupils.

Action 2.5 – Homeless/Foster/At-Risk Youth Specialist (0.5 FTE)
Effective (Metrics 2.5, 2.6, 2.9, 2.10, 2.12, 2.13, & 2.14: Foster & Homeless Graduation Rates, Discipline, & School Climate). Provided targeted advocacy, cross-agency coordination, and immediate access to services, stabilizing the educational experience for the District's most vulnerable youth. Because of this targeted intervention, graduation rates for homeless students showed a successful rebound, improving from 85.2% to 88.9%.

Action 2.6 – School Climate & Mental Health Surveys (Hanover)
Effective (Metrics 2.15–2.17: School Climate). Effectively gathered actionable, anonymous feedback on school climate and mental health during the Fall and Spring windows, directly informing site-level engagement planning. Survey results confirmed a positive school climate driven by site-level DEI and wellness initiatives, with 85% of staff, 80% of parents, and 79% of students agreeing that "we treat each other with respect."

Action 2.7 – Partial SOAR Program Staffing (CDS) (1 teacher; 1 para; 2 specialists)
Effective (Metrics 2.2–2.8 & 2.12: Graduation Rates & Discipline). Successfully supported alternative education and specialized behavioral interventions for unduplicated secondary students with intensive needs. This targeted support provided necessary interventions that contributed to declining discipline rates and the notable increases in graduation rates for English Learners (94.5%) and socioeconomically disadvantaged students (96.8%).

A description of any changes made to the planned goal, metrics, target outcomes, or actions for the coming year that resulted from reflections on prior practice.

Reflections on the implementation of Goal 2 during the 2025–2026 school year have led to a collective decision by the Burbank Unified School District (BUSD) and our educational partners to "stay the course" for the upcoming 2026–2027 LCAP. Because the District executed a major restructuring of supplemental funding and actions in the previous year to more effectively support students' physical, emotional, and mental well-being, the focus for the coming year is to allow these newly established, highly effective programs to fully mature and solidify. Therefore, no substantive changes are being made to the planned goal, metrics, target outcomes, or actions for the 2026-2027 cycle.

Maintaining Metrics and Target Outcomes: The metrics used to evaluate Goal 2 will remain consistent with the refined focus established last year. While traditional academic indicators remain important, the District will continue to place heavy emphasis on behavioral and wellness metrics. These include chronic absenteeism, which dropped from 18.9% in 2022–2023, to 13.4% in 2023–2024, and has continued to decline to 13.1%, as well as suspension rates, which have also remained low and declined at 2.5%. These sustained improvements confirm that the District's investments in targeted mental health support are yielding positive results. Going forward, BUSD will continue to monitor these indicators closely alongside student and parent survey data. An addition was made to our graduation metrics. 2.2 and 2.4 to specifically monitor the graduation rate for Monterey HS as there are significant financial investments in goal 2 to support the student population at our continuation school (Monterey).

In summary, the 2026–2027 LCAP represents a commitment to stability and continuous improvement. By reflecting on the successes of the major structural changes made during the 2025–2026 cycle, BUSD and its educational partners have chosen to deliberately maintain the current actions, metrics, and target outcomes. This ensures that our targeted behavioral and wellness supports can achieve maximum direct impact for our students in the post-pandemic educational landscape.

A report of the Total Estimated Actual Expenditures for last year's actions may be found in the Annual Update Table. A report of the Estimated Actual Percentages of Improved Services for last year's actions may be found in the Contributing Actions Annual Update Table.

Actions

Action #	Title	Description	Total Funds	Contributing

1	Monterey Teachers (4.0 FTEs)	Four additional teachers at Monterey High School will provide instructional services to unduplicated students in the continuation school environment. - The continuation high school serves a large number of students who represent our low-income students, English learners, and homeless students. - Will increase services to unduplicated students by giving teachers greater opportunities to provide individualized instruction to meet unique student needs. - Low-income, English learners, and homeless youth within this smaller setting will receive small group instruction more regularly, increased 1:1 instruction, closely monitored academic progress, and increased intervention beginning with Tier II and then advancing to Tier III as needed - Increasing teachers will improve communication with parents about the academic and behavioral progress of the unduplicated students on this campus.	$578,862.24	Yes
2	Family Services Agency of Burbank (FSA) Counseling Program	English learners and low-income students have shown to have limited access to personal counseling as these families have voiced the inability to procure these services on their own. Research shows that when students are feeling emotionally safe, they are focused on their studies and perform better academically. Unduplicated student groups benefit from this service as targeted funding gives an avenue for students to seek assistance from an outside agency as students may not feel comfortable talking with school district staff. Students may feel more comfortable talking with someone who has less affiliation with the school. The Family Services Agency of Burbank (FSA) provided counseling and mental health services for low-income students and English learners. Academic achievement counseling may also occur depending on the student's needs. The result will be a student who has someone to turn to and help to work with through crisis situation and positively impact his/her academic, social-emotional, and behavioral issues.	$134,130.00	Yes
3	Secondary Summer School Credit Recovery	Provide opportunities for high school students who have failed one or more courses during the regular school year to make up credits. The failure rate of students who are low-income, English learners and students experiencing homelessness is at a higher rate than other student subgroups. Credit recovery opportunities helps students towards course completion which leads towards graduation.	$102,000.00	Yes
4	Elementary Wellness & Behavior Specialists (3 FTE)	Unduplicated students often experience chronic absenteeism and frequent tardiness. Research indicates that when students feel emotionally safe, they are more focused and perform better academically. Elementary principals have identified a need for staff who can respond effectively to collaborate with parents to address attendance issues. Staff will also coordinate with district student services for students who have behavioral concerns but do not qualify for SPED services. Elementary Wellness and Behavior Specialists will specialize in providing interventions when students have chronic absences, tardy absences, and/or significant behaviors. - Provide 3.0 FTE to serve all elementary schools and supplement the behavior interventionalist work at the site with coordinated effort through student services department. - Concentrate focus on supporting parents with attendance, getting students to school with their basic needs met. - A focus on addressing chronic absenteeism across the sites they serve.. The district will access the services from LACOE, and school sites will be given training and assistance from the Department of Student Services. - Staff to support the School Attendance Review Board (SARB) process to work directly with student services department to identify and provide interventions prior to a SARB Meeting with parents and school staff.	$335,532.06	Yes

5	Homeless/Foster/At-Risk Youth Specialist	Students experiencing homelessness and foster youth students need support accessing local and regional resources. Additionally, traditional methods of communication with families are often inaccessible to families in these circumstances. A need for a staff member who can act as an advocate on behalf of the student group and individual students has been identified based on the frequency with which these students' ability to access the academic program, as well as additional services and activities, is often overlooked or not addressed by traditional staffing. Transportation and access to local and regional services will be communicated directly with families, and individualized communication will be provided to Students and parents experiencing homelessness or who are placed in foster care. Students and families will be assisted by this staff to advocate for additional resources and considerations to be able to access the instructional programs, as well as other activities and programs.	$58,579.62	Yes
6	School Climate & Mental Health Surveys (Hanover)	BUSD surveys students, families, and staff annually to collect data on a variety of metrics that give us insight into the perspectives, perceptions, and experiences our students, families and staff have. We collect and analyze this data through an outside vendor to allow our participants to remain anonymous. Additionally, the results of these surveys help us measure growth in the metrics section of the LCAP.	$50,000.00	Yes
7	Partial SOAR Program Staffing (CDS) (1 teacher; 1 para; 2 specialists)	- The SOAR Program serves a large number of unduplicated students. Therefore, a smaller class size will ensure that students receive more individualized instruction to meet their needs and excel academically. - Low-income, English learners, and foster youth within this smaller will receive small group instruction more regularly, 1:1 instruction more regularly, more closely monitored academic progress, more intervention beginning with Tier II and then advancing to Tier III as needed - This will provide for 1.0 FTE additional teachers to serve the unduplicated students at the school. - It will also provide for a 2.0 FTE for SOAR Wellness & Behavior Specialists to serve the unduplicated students across the district. - It also provides 1.0 Campus Supervisor to assist with the SOAR student population on Monterey Campus.	$408,230.52	Yes

Goal

Goal #	Description	Type of Goal
3	Recruit and retain quality employees as measured by full employment of teaching staff with appropriate credentials and placed in appropriate assignments. (Human Resources) State of California Priorities: Priority One: Basic (Conditions of Learning) Priority Two: State Standards (Conditions of Learning) Priority Three: Parental Involvement (Engagement) Priority Four: Pupil Achievement (Pupil Outcomes) Priority Five: Pupil Engagement (Engagement) Priority Six: School Climate (Engagement) Priority Seven: Course Access (Conditions of Learning) Priority Eight: Other Pupil Outcomes (Pupil Outcomes)	Broad Goal

State priorities addressed by this goal.

1, 2, 3, 4, 5, 6, 7, 8

An explanation of why the LEA has developed this goal.

BUSD has traditionally met Williams compliance annually and will work towards maintaining that expectation. Fully credentialed teachers not only are required for compliance but also for the instructional program to meet the learning needs of students.

Metrics in this goal will help determine the progress made in creating an inclusive work environment that attracts high qualify candidates diverse backgrounds.

Measuring and Reporting Results

Metric #	Metric	Baseline	Year 1 Outcome	Year 2 Outcome	Target for Year 3 Outcome	Current Difference from Baseline

1	Survey data will indicate progress in positive relationships among staff, students, and families leading to more open communication, academic achievement, and positive student behavior will improve by 6 percentage points over 3 years.	In 2022-2023, School Satisfaction Survey analysis indicated the following: Teachers communicate with students about academic progress: Students - 60%; Parents - 78%; Staff - 84%; In 23-24, School Satisfaction Survey analysis indicated English Language Learner (Parent & Student) - 33% and Title I Schools (SED) 79%	In 2023-2024, School Satisfaction Survey analysis indicated the following: Teachers communicate with students about academic progress: Students - 55%; Parents - 78%; Staff - 93%;	In 2024-2025, School Satisfaction Survey analysis indicated the following: Teachers communicate with students about academic progress: Students - 57%; Parents - 77%; Staff - 85%;	Staff, students, and families sense of open communication, academic achievement, and positive student behavior will improve by 6 percentage points by year 3.	Survey data will indicate progress in positive relationships among staff, students, and families leading to more open communication, academic achievement, and positive student behavior changed as follows: Students decreased by 3%; Parents decreased by 1%; Staff increased by 1%
2	Survey results related to diversity, equity, and inclusion will improve by 6 percentage points over 3 years	In 2022-2023, School Satisfaction Survey analysis indicated the following: We treat each other with respect: Staff - 74%; Students - 78%; Parents - 86%; In 23-24, School Satisfaction Survey analysis indicated English Language Learner (Parent & Student) - 33% and Title I Schools (SED) 69%	In 2023-2024, School Satisfaction Survey analysis indicated the following: We treat each other with respect: Staff - 88%; Students - 64%; Parents - 78%;	In 2024-2025, School Satisfaction Survey analysis indicated the following: We treat each other with respect: Staff - 85%; Students - 79%; Parents - 80%;	Survey results related to diversity, equity, and inclusion will improve by 6 percentage points by year 3.	Survey results related to diversity, equity, and inclusion changed as follows: Staff increased by 11%; Students increased by 1%; Parents decreased by 6%

3	Employment of Certificated Personnel Administrators will meet the needs of the District and be in alignment with State certification requirements	In 2022–2023, this metric was met.	In 2023–2024, this metric was met	In 2024–2025, this metric was met	Employment of Certificated Personnel Administrators will meet the needs of the District and be in alignment with State certification requirements	2024-2025 Employment of Certificated Personnel Administrators was met.

Goal Analysis for 2025-2026

An analysis of how this goal was carried out in the previous year.

A description of overall implementation, including any substantive differences in planned actions and actual implementation of these actions, and any relevant challenges and successes experienced with implementation.

Overall Implementation & Successes The implementation of Goal 3 during the 2025–2026 school year focused on recruiting and retaining highly qualified employees while fostering a diverse, inclusive, and professionally supported workforce. Following the strategic adjustments made in the previous LCAP cycle the planned actions for 2025-2026 were implemented with a high degree of fidelity and success. Most notably the shift away from a centralized DEI Consultant toward a more sustainable, site-based leadership model contributed to the success of our DEI work as well as staff satisfaction.

A major success of this decentralized approach was the effective utilization of the Diversity, Equity, and Inclusion (DEI) Site Teacher Lead stipends (Action 3.1) and their dedicated collaboration time (Action 3.2). By relying on existing administrative staff and site-based teacher leaders rather than outside consultants, the District successfully embedded equity work more deeply into the daily fabric of school life. Participation in site-based equity initiatives remained robust. School Satisfaction Survey data indicates that this decentralized approach is positively influencing school culture; for example, the percentage of staff reporting that "we treat each other with respect" was 85% in the prior year, staff increased by 11%; Students increased by 1%; Parents decreased by 6% in 2025-2026.

Another cornerstone of success for Goal 3 was the District's continued compliance with state certification requirements for certificated personnel and administrators (Action 3.3). This metric, which ensures that all educators are appropriately credentialed and assigned, was fully met. Maintaining this standard is critical to ensuring high-quality instruction and reflects the District's ongoing, unwavering commitment to professional excellence.

Challenges and Substantive Differences Because the 2025–2026 actions were purposefully refined and scaled to match the District's capacity, there were no major substantive differences between the planned actions and actual implementation. The reduction in collaboration funding (Action 3.2) planned for 25-26 successfully balanced fiscal responsibility with the need for meaningful professional development without overextending limited resources.

However, systemic challenges persisted. The recruitment and retention of staff in specialized roles continues to be a hurdle. Similar to the challenges noted in Goals 1 and 2, statewide staffing shortages—especially in areas such as behavioral support and special education—required ongoing, intensive recruitment efforts. While this did not prevent the District from meeting its baseline certification requirements, it underscores the critical importance of not only offering competitive compensation but continuing to foster the supportive and inclusive work environments driven by our site-level DEI initiatives.

Specific Actions:

Action 3.1 – Diversity, Equity, and Inclusion (DEI) Site Teacher Lead Stipends (Note: Shifted from Action 3.2 in previous cycles)

Implementation: Fully implemented.

Targeted subgroups: English Learners, Low Income, Foster Youth.

Analysis: With the strategic removal of the centralized consultant role, these stipends successfully empowered site-based DEI leadership. Participation was strong, and empowering site leads allowed for equity initiatives to be tailored to specific campus needs, resulting in sustained positive perceptions of school climate and inclusion.

Action 3.2 – DEI Site Lead Collaboration Time (Note: Shifted from Action 3.3 in previous cycles)

Implementation: Fully implemented.

Targeted subgroups: English Learners, Low Income, Foster Youth.

Analysis: The refined budget successfully provided the necessary time for professional development and coordination among DEI leads. This action supported the District's shift toward efficiently embedding collaboration into existing structures.

Action 3.3 – Certificated Personnel and Administrative Costs at the District and Site Level (Note: Shifted from Action 3.4 in previous cycles)

Implementation: Fully implemented.

Targeted subgroups: All students (Not contributing to increased/improved services for unduplicated groups; Base funded).

Analysis: The District successfully met its goal of maintaining fully credentialed staff. 100% compliance with state certification requirements was achieved, securing high-quality instruction and workforce stability despite broader regional hiring challenges.

An explanation of material differences between Budgeted Expenditures and Estimated Actual Expenditures and/or Planned Percentages of Improved Services and Estimated Actual Percentages of Improved Services.

Summary: Overall, the district experienced a net underspending of approximately $2,611 for Goal 3 contributing initiatives. This minor variance was largely driven by highly accurate fiscal planning and efficient program execution following the structural shifts made in the previous year. The most notable (though slight) underspending occurred in Diversity, Equity, & Inclusion Site Lead Collaboration Time (Action 3.2), which came in just under budget due to the successful integration of collaboration into existing professional learning communities, reducing the need for additional paid hours. The Diversity, Equity, & Inclusion Site Teacher Lead Stipends (Action 3.1) were almost perfectly on budget, reflecting stable and full implementation.

Because the district had already refined this goal by removing ineffective actions (such as the centralized DEI consultant) in the previous cycle, the current expenditures closely match the budget. Despite the minor underspending, the district fully maintained its commitment to the core objectives of Goal 3: fostering a diverse, inclusive, and professionally supported workforce. The adjustments and execution reflect a responsive approach to evolving needs, balancing fiscal responsibility with the goal of sustaining and improving school climate and equitable outcomes for unduplicated students.

A description of the effectiveness or ineffectiveness of the specific actions to date in making progress toward the goal.

Summary: The evaluation of Goal 3—which focuses on recruiting and retaining highly qualified employees while fostering a positive, inclusive culture—demonstrates that the District's recent strategic recalibrations have been highly effective. During the 2025–2026 school year, Burbank Unified School District (BUSD) fully realized its shift away from centralized consulting toward an empowering, site-based leadership model. The outcomes of this implementation confirm that the actions taken to date are making meaningful progress toward the goal.

A central success of the 2025–2026 plan was the effective utilization of the Diversity, Equity, and Inclusion (DEI) Site Teacher Lead stipends (Action 3.1) and their associated Collaboration Time (Action 3.2). Having previously removed the centralized DEI Consultant role, the District relied on these site-based teacher leaders to advance equity-focused initiatives that were tailored to the specific needs of their individual campuses. This localized approach proved highly effective. Recent School Satisfaction Survey data indicates strong, sustained positive perceptions of school climate. For instance, staff agreement with the statement "we treat each other with respect" remained high at 85%. Furthermore, student agreement saw a dramatic increase (from a baseline of 64% to 79%), and parent agreement increased to 80%. This improvement strongly suggests that embedding site-based DEI leadership into the daily practices of our schools is having a profound, positive effect on school culture and relationships.

Another key metric for Goal 3 is the employment of fully credentialed teachers and administrators (Action 3.3). The District effectively met this target, maintaining compliance with state certification requirements. This success is significant, especially in a statewide context where many districts continue to struggle with post-pandemic staffing shortages and a reliance on intern or out-of-field teachers. Burbank Unified's ability to maintain a highly qualified workforce speaks to the strength and effectiveness of its base-funded recruitment and retention practices, even amid broader labor market challenges.

Despite these overarching successes, the District acknowledges that staffing specialized roles (such as special education and behavioral support) requires continuous effort. However, by right-sizing the collaboration funding to balance fiscal responsibility with meaningful professional development, BUSD has ensured that its equity and retention work is both impactful and sustainable.

In summary, the actions under Goal 3 during the 2025–2026 school year were highly effective. The strategic pivot to empower site-based DEI leadership (Actions 3.1 and 3.2) and the District's continued compliance with credentialing standards (Action 3.3) demonstrate meaningful progress. The adjustments made in the previous year reflect a commitment to refining strategies based on evidence, ensuring that the District continues to build a strong, inclusive, and professionally supported workforce for the 2026–2027 cycle and beyond.

Specific Actions:

Action 3.1 – Diversity, Equity, and Inclusion (DEI) Site Teacher Lead Stipends (Note: Shifted from Action 3.2 in previous cycles)

Effective

Targeted subgroups: English Learners, Low Income.

Analysis: With the strategic removal of the centralized consultant role, these stipends successfully empowered site-based DEI leadership. Participation was strong, and

empowering site leads allowed for equity initiatives to be tailored to specific campus needs, resulting in sustained positive perceptions of school climate and inclusion. This action successfully supported increased services, as validated by recent survey data showing agreement that "we treat each other with respect" among staff (85%), students (improving significantly to 79%), and parents (80%). English learners reported 89% agreement. Title I schools 86% compered to non-title one schools - 83% to represent low-income populations.

Action 3.2 – DEI Site Lead Collaboration Time (Note: Shifted from Action 3.3 in previous cycles)

Effective

Targeted subgroups: English Learners, Low Income, Foster Youth.

Analysis: The refined budget successfully provided the necessary time for professional development and coordination among DEI leads. This action supported the District's shift toward efficiently embedding collaboration into existing structures, contributing directly to the positive climate survey results across key subgroups (staff at 85%, students at 79%, and parents at 80% agreement on respectful treatment). English learners reported 89% agreement. Title I schools 86% compered to non-title one schools - 83% to represent low-income populations.

Action 3.3 – Certificated Personnel and Administrative Costs at the District and Site Level (Note: Shifted from Action 3.4 in previous cycles)

Effective

Targeted subgroups: All students (Not contributing to increased/improved services for unduplicated groups; Base funded).

Analysis: The District successfully met its goal of maintaining fully credentialed staff. Compliance with state certification requirements was achieved, securing high-quality instruction and workforce stability despite broader regional hiring challenges.

A description of any changes made to the planned goal, metrics, target outcomes, or actions for the coming year that resulted from reflections on prior practice.

Reflections on the highly successful implementation of Goal 3 during the 2025–2026 school year have led to a collective decision by the Burbank Unified School District (BUSD) and our educational partners to continue actions as is for the upcoming 2026–2027 Local Control and Accountability Plan (LCAP). Because the District executed significant, strategic adjustments to this goal in the previous cycle the focus for the coming year is to allow these refined strategies to fully mature. Therefore, no substantive changes are being made to the planned goal, metrics, target outcomes, or actions for the 2026–2027 cycle.

Maintaining Metrics and Target Outcomes: Another critical area of continuity is the District's unwavering commitment to maintaining a fully credentialed teaching and administrative staff (Action 3.3). This metric, which was successfully met in the previous cycles, remains a cornerstone of Goal 3. The District's ability to consistently meet this target, even amid ongoing statewide staffing shortages, is a testament to its effective, base-funded recruitment and retention strategies. For 2026–2027, this metric will continue to be rigorously monitored through the California Department of Education's Teacher Assignment Monitoring and Oversight (TAMO) report to ensure that all students have access to appropriately credentialed educators. The metric was updated for year 1 outcomes to reflect the appropriate year.
In summary, the 2026–2027 LCAP for Goal 3 reflects a commitment to stability and implementation fidelity. The strategic refinements made in the previous year—focusing on sustainable, site-embedded leadership (Actions 3.1 and 3.2) and maintaining high standards for teacher qualifications (Action 3.3)—have proven highly effective. By choosing to "stay the course" and invest in what works, Burbank Unified is reinforcing its long-term vision of building a strong, inclusive, and professionally supported workforce.

A report of the Total Estimated Actual Expenditures for last year's actions may be found in the Annual Update Table. A report of the Estimated Actual Percentages of Improved Services for last year's actions may be found in the Contributing Actions Annual Update Table.

Actions

Action #	Title	Description	Total Funds	Contributing
1	Diversity, Equity, & Inclusion Site Teacher Lead Stipends	As a continued extension and progression of the professional development, training, and support our campuses have received in diversity, equity, and inclusion (DEI) practices, a stipend will be given to select teachers on campus who will act as liaisons for students to receive support and voice issues or concerns regarding DEI. Teachers receiving the DEI stipend will collaborate with our DEI consultants and will assist in leading site discussions and professional development for the DEI initiative. Professional Development will focus on marginalized student groups found within the subgroups of English Learners and Socioeconomically Disadvantaged.	$100,755.60	Yes
2	Diversity, Equity, & Inclusion Site Lead Collaboration Time	As a continued extension and progression of the professional development, training, and support our campuses have received in diversity, equity, and inclusion (DEI) practices, collaboration time will be provided to select teachers on campus who will act as a liaisons for students to receive support and voice issues or concerns regarding DEI. Teachers will collaborate with our DEI consultants and will assist in leading site discussions and professional development for the DEI initiative. Professional Development will focus on marginalized student groups found within the subgroups of English Learners and Socioeconomically Disadvantaged.	$25,500.00	Yes
3	Certificated Personnel and Administrative Costs at the District and Site Level	Certificated Personnel and Administrative Costs at the District and Site Level to support the education of students Continue to recruit and retain highly qualified certificated staff via a more competitive salary - given competing budgetary needs and interests.	$116,732,680.00	No

Goal

Goal #	Description	Type of Goal
4	Efficient and effective operations as measured by appropriate facilities especially classrooms that are conducive to the needs of the instructional program. (Business Services) State of California Priorities: Priority One: Basic (Conditions of Learning) Priority Three: Parental Involvement (Engagement) Priority Six: School Climate (Engagement) Priority Eight: Other Pupil Outcomes (Pupil Outcomes)	Broad Goal

State priorities addressed by this goal.

1, 3, 6, 8

An explanation of why the LEA has developed this goal.

BUSD prides itself in having facilities especially classrooms, playgrounds, libraries, cafeterias, and other instructional areas that meet the needs of the instructional program. It is the expectation that this practice continues.

A single metric will determine if processes being followed to identify and address any concerns with the status of our school and district infrastructure including grounds and buildings.

Measuring and Reporting Results

Metric #	Metric	Baseline	Year 1 Outcome	Year 2 Outcome	Target for Year 3 Outcome	Current Difference from Baseline
1	100% Compliance with the Facilities Inspection Tool (FIT)	100% compliance with the completion of the Facilities Inspection Tool (FIT) in 2022-2023	100% compliance with the completion of the Facilities Inspection Tool (FIT) in 2023-2024	100% compliance with the completion of the Facilities Inspection Tool (FIT) in 2024-2025	100% compliance with the completion of the Facilities Inspection Tool (FIT)	100% Compliance with the Facilities Inspection Tool (FIT)

Goal Analysis for 2025-2026

An analysis of how this goal was carried out in the previous year.

A description of overall implementation, including any substantive differences in planned actions and actual implementation of these actions, and any relevant challenges and successes experienced with implementation.

Overall Implementation & Successes
During the 2025–2026 school year, the implementation of Goal 4—which ensures that all school facilities are maintained in good repair and provide safe, functional learning environments—was highly successful. The District achieved full implementation of its planned maintenance and operations action (Action 4.1).

Ongoing base funding effectively supported the daily maintenance and operation of all schools and district sites. Furthermore, the District successfully utilized specific bond and insurance funds to support necessary new construction and address major infrastructural repairs without detracting from the general maintenance budget. A key measurable success of this implementation was the District's ability to achieve and maintain 100% compliance with the Facilities Inspection Tool (FIT) across all campuses, ensuring that students and staff had access to safe, clean, and well-maintained educational spaces.

Challenges and Substantive Differences
Because the District prioritized basic operational services, there were no substantive differences between the planned actions and the actual implementation; Action 4.1 was fully implemented as intended.

However, the District did navigate relevant operational challenges during the 2025–2026 school year. Extreme weather occurrences, including heavy winds, highlighted ongoing vulnerabilities and created immediate needs for roofing and facility improvements. This required the maintenance and operations teams to swiftly pivot resources to address urgent repairs.

Additionally, consistent staffing within the facilities and maintenance departments remained a persistent challenge. The District faced continuous vacancies and navigated a limited pool of highly qualified candidates for specialized trades and custodial roles. To mitigate this challenge and ensure no lapse in service quality, the Facilities Department collaborated closely with Human Resources to actively recruit and fill positions, strategically utilizing both long-term hires and daily substitutes to maintain operational standards across all sites.

Specific Actions:

Action 4.1 – Maintenance and Operations of Facilities

Implementation: Fully implemented.

Targeted subgroups: All students (Not contributing to increased/improved services for unduplicated groups; Base funded).

Analysis: The District successfully provided for the basic operational and maintenance services of all school sites. Despite the challenges posed by extreme weather occurrences and an ongoing shortage of classified facility staff, strategic collaboration with HR and the use of substitute personnel ensured continuous, safe operations and a 100% compliance rate on the state Facilities Inspection Tool (FIT).

An explanation of material differences between Budgeted Expenditures and Estimated Actual Expenditures and/or Planned Percentages of Improved Services and Estimated Actual Percentages of Improved Services.

All Goal 4 action item one was fully funded with no supplemental funds or variations in the general fund budgeted amount compared to actual expenditures, as this goal is funded through base grant funds or grant and bond monies, with no material difference in maintenance costs.

A description of the effectiveness or ineffectiveness of the specific actions to date in making progress toward the goal.

A description of the effectiveness or ineffectiveness of the specific actions to date in making progress toward the goal.

Summary:
The evaluation of Goal 4—which ensures that all school facilities are maintained in good repair and provide safe, functional learning environments—demonstrates that the District's maintenance and operations efforts were highly effective during the 2025–2026 school year.

District Facilities Inspection Tool (FIT) reports were all completed promptly, and any facility findings (including immediate needs generated by extreme weather and high winds) were addressed rapidly by the maintenance teams. As a result, the District remains in excellent standing with all state reporting regarding the conditions of our campuses. Despite the ongoing classified staffing challenges noted previously, day-to-day operations and cleaning schedules were successfully maintained without interruption throughout the 2025–2026 school year through strategic collaboration with Human Resources.

Overall, the District's base-funded facility operations (Action 4.1) successfully met its target, achieving a 100% compliance rate on the state Facilities Inspection Tool (FIT). Because it directly resulted in safe, well-maintained campuses for all students and staff, this action is determined to be highly effective in making progress toward the goal.

Specific Actions:

Action 4.1 – Maintenance and Operations of Facilities

Effective (Metric 4.1: 100% Compliance with the Facilities Inspection Tool (FIT))

Analysis: Base-funded maintenance and operations successfully ensured that all campuses remained safe, clean, and fully functional. The District achieved 100% compliance on state facility inspections, successfully overcoming regional staffing shortages and acute weather challenges to provide an optimal physical environment for student learning.

A description of any changes made to the planned goal, metrics, target outcomes, or actions for the coming year that resulted from reflections on prior practice.

Reflections on the successful implementation of Goal 4 during the 2025–2026 school year indicate that the District's current approach to maintenance and operations is highly effective. As a result, Burbank Unified School District (BUSD) and its educational partners have determined that no changes will be made to the planned goal, metrics, target outcomes, or actions for the upcoming 2026–2027 LCAP.
Because the District successfully maintained 100% compliance on the state Facilities Inspection Tool (FIT)—even while navigating acute weather challenges and regional classified staffing shortages—the focus for the coming year is to simply maintain this high standard of operational excellence. The District will "stay the course" with its base-funded facilities maintenance (Action 4.1).
There have been no changes to the goals, metrics, target outcomes, or actions.

A report of the Total Estimated Actual Expenditures for last year's actions may be found in the Annual Update Table. A report of the Estimated Actual Percentages of Improved Services for last year's actions may be found in the Contributing Actions Annual Update Table.

Actions

Action #	Title	Description	Total Funds	Contributing
1	Provide Facility and Maintenance Operations staff, including custodians to provide a clean, safe, and secure learning environment for all students.	Provide Facility and Support Operations (FASO) staff, including custodians to provide a clean, safe, and secure learning. This action supports the education of students by having safe and secure facilities.	$7,395,358.00	No

Increased or Improved Services for Foster Youth, English Learners, and Low-Income Students for 2026-2027

Total Projected LCFF Supplemental and/or Concentration Grants	Projected Additional 15 percent LCFF Concentration Grant
$12,617,495.00	

Required Percentage to Increase or Improve Services for the LCAP Year

Projected Percentage to Increase or Improve Services for the Coming School Year	LCFF Carryover — Percentage	LCFF Carryover — Dollar	Total Percentage to Increase or Improve Services for the Coming School Year
7.77%	0.00%	$0.00	7.77%

The Budgeted Expenditures for Actions identified as Contributing may be found in the Contributing Actions Table.

Required Descriptions

LEA-wide and Schoolwide Actions

For each action being provided to an entire LEA or school, provide an explanation of (1) the unique identified need(s) of the unduplicated student group(s) for whom the action is principally directed, (2) how the action is designed to address the identified need(s) and why it is being provided on an LEA or schoolwide basis, and (3) the metric(s) used to measure the effectiveness of the action in improving outcomes for the unduplicated student group(s).

Goal and Action #(s)	Identified Need(s)	How the Action(s) Address Need(s) and Why it is Provided on an LEA-wide or Schoolwide Basis	Metric(s) to Monitor Effectiveness
Goal 1, Action 1 Elementary Class Size Reduction Grades 4 and 5	Unduplicated pupils' academic achievement in mathematics and literacy, and acquisition of English for EL students. This action is a schoolwide action due to the high unduplicated student counts as well as Dual Immersion program at Disney (43% unduplicated pupils) & McKineley (38% unduplicated pupils) Elementary schools. The action being developed is based on the needs of English learners and socioeconomically disadvantaged students (low-income students). The following data set provides the reader with additional data for comparative purposes. Disney ELA SBAC data indicates the following need to raise the percentage of students who meet or exceed the standard from the following 2022-23 baseline: All (68.04%); ELs (16.67%); SEDs (55.00%). Disney Math SBAC data indicates the following need to raise the percentage of students who meet or exceed the standard from the following 2022-23 baseline: All (50.00%); ELs (7.70%); SEDs (36.91%). McKinley ELA SBAC data indicates the following need to raise the percentage of students who meet or exceed the standard from the following 202-23 baseline: All (45.46%); ELs (0.0%); SEDs (31.33%). McKinley Math SBAC data indicates the following need to raise the percentage of students who meet or exceed the standard from the following 2022-23 baseline: All (37.05%); ELs (11.11%); SEDs (19.27%).	This action meets the needs of our UDP population, as smaller class sizes will allow the teacher and instructional assistants to work with students in small groups and in a 1:1 setting, resulting in increased student achievement. This is the most effective use of funds as research shows that a smaller class size, coupled with effective teaching practices, results in greater student achievement. Teachers and instructional assistants provide students with small group and 1:1 instruction that will towards student academic success. The makeup of classrooms is approximately 40% of students who are English learners, low-income students, and students experiencing homelessness, where small groups and individualized instruction can be specifically utilized. This action is school-wide wide though it is principally directed to support smaller classes in upper elementary for UDP students, which will allow for more focused time for small group instruction to support the math and literacy achievement of all students. Smaller class sizes benefit all students as teachers are able to provide more small-group and 1:1 instruction in a smaller class setting, resulting in improved student performance. This is to ensure students are on grade level academically before entering middle school.	(Metrics 1.1–1.16; 1.20-1.26: CAASPP ELA & Math; Graduation)

Goal 1, Action 4 Dual Immersion Teacher Cost Share	The action being developed is based on the needs of English learners and socioeconomically disadvantaged students (low-income students). The following data set provides the reader with additional data for comparative purposes. Unduplicated pupils' academic achievement in mathematics and literacy, and acquisition of English for EL students. Disney ELA SBAC data indicates the following need to raise the percentage of students who meet or exceed the standard from the following 2022-23 baseline: All (68.04%); ELs (16.67%); SEDs (55.00%). Disney Math SBAC data indicates the following need to raise the percentage of students who meet or exceed the standard from the following 2022-23 baseline: All (50.00%); ELs (7.70%); SEDs (36.91%). McKinley ELA SBAC data indicates the following need to raise the percentage of students who meet or exceed the standard from the following 202-23 baseline: All (45.46%); ELs (0.0%); SEDs (31.33%). McKinley Math SBAC data indicates the following need to raise the percentage of students who meet or exceed the standard from the following 2022-23 baseline: All (37.05%); ELs (11.11%); SEDs (19.27%). 4th and 5th Grade Class Size Reduction for Targeted Subgroups - Disney Elementary and McKinley Elementary (Title I Schools)	This action meets the needs of our UDP population, as it will reduce class size so that there are 5 to 7 fewer students per class to provide additional support to ELD and low-income students. Research shows that smaller class size coupled with effective teaching practices results in greater students achievement. The makeup of classrooms is primarily of unduplicated students with a concentration of students who are English learners and low-income. Teachers and instructional assistants provide students with small group and 1:1 instruction that will towards student academic success. This Action is school-wide though it is principally directed to support English language acquisition for English learners, in elementary. Dual-Immersion language classrooms allow mutually beneficial classroom environments for Spanish speaking families and English Speaking families to learn grade level curriculum while obtaining a second language. Therefor this action is school-wide as it benefits all students. Re-enforcement of the child's home language will also occur as a result. This will ensure students are at grade level academically before entering middle school and reduce the risk of ELs becoming LTELs.	(Metrics 1.1–1.16; 1.20-1.26: CAASPP ELA & Math; Graduation)

Goal 1, Action 5 Dual Immersion Instructional Assistants	The action being developed is based on the needs of English learners and socioeconomically disadvantaged students (low-income students). The following data set provides the reader with additional data for comparative purposes. Unduplicated pupils' academic achievement in mathematics and literacy, and acquisition of English for EL students. Disney ELA SBAC data indicates the following need to raise the percentage of students who meet or exceed the standard from the following 2022-23 baseline: All (68.04%); ELs (16.67%); SEDs (55.00%). Disney Math SBAC data indicates the following need to raise the percentage of students who meet or exceed the standard from the following 2022-23 baseline: All (50.00%); ELs (7.70%); SEDs (36.91%). McKinley ELA SBAC data indicates the following need to raise the percentage of students who meet or exceed the standard from the following 202-23 baseline: All (45.46%); ELs (0.0%); SEDs (31.33%). McKinley Math SBAC data indicates the following need to raise the percentage of students who meet or exceed the standard from the following 2022-23 baseline: All (37.05%); ELs (11.11%); SEDs (19.27%).	This action meets the needs of our UDP population, as it will reduce class size so that there are 5 to 7 fewer students per class to provide additional support to ELD and low-income students. This is the most effective use of funds as research shows that smaller class sizes, combined with effective teaching practices, lead to greater student achievement. In classrooms primarily composed of unduplicated students, educators apply principles from social learning theory and culturally responsive teaching by providing small group and 1:1 instruction tailored to students' backgrounds and needs. These approaches foster engagement, build academic confidence, and support equitable learning outcomes. This Action is school-wide though it is principally directed to support English language acquisition for English learners, in elementary. Dual-Immersion language classrooms allow mutually beneficial classroom environments for Spanish speaking families and English Speaking families to learn grade level curriculum while obtaining a second language. Therefor this action is school-wide as it benefits all students. Re-enforcement of the child's home language will also occur as a result. This will ensure students are at grade level academically before entering middle school and reduce the risk of ELs becoming LTELs.	(Metrics 1.1–1.16; 1.20-1.26: CAASPP ELA & Math; Graduation)

Goal 1, Action 7 Interpreters for Second Language Learner Parents	English Learner pupils' and families need school and district information in a variety of languages. Access to the same educational opportunities require the use of translators and interpreters so families with a home language other than English have the same access to information to make educational decisions for their children. These services are provided across all districtwide communications as well as available to sites that request support for translation of school-to-home materials. Interpreters (written and spoken) for Second Language Students, Parents, and Family Members - Continue to recruit and hire more classified staff who can provide interpretation services at all sites that have an English Learner Advisory Committee (ELAC), as well as to any District families who require translation	This action meets the needs of our ELL population, as it will assist in translating documents for parents of English Language Learners who need additional support to access school meetings, materials, and correspondence. This action is the most effective use of funds to meet the needs of ELL populations at all sites, as English Learner families are elevated within the unduplicated student populations, and parent engagement is a research-based contributor to student success. This action is LEA-wide to support families that speak a language other than English in their household across the entire district. All students will benefit from this action as many families have parents and/or contacts that speak a language other than English, regardless of their students' English language acquisition.	Metrics 1.2, 1.10, 1.17, 1.18, & 1.33 (English Learner CAASPP ELA & MATH and family engagement)
Goal 1, Action 8 Induction Professional Development Teacher on Special Assignment	Unduplicated pupils' academic achievement in mathematics and literacy, and acquisition of English for EL students. New hires and teaching staff need support for entering into the workforce as well as a mechanism to finish their credentialing to be full-time, highly qualified, permanent teachers. Often times vacancies and new hires are positions that work with our most vulnerable populations, including English Learners, and students experiencing homelessness.	This action meets the needs of our UDP population, as the teacher on Special Assignment will provide professional development services to induction teachers, focusing on the teaching and learning needs of unduplicated students. Attention will be given to the mastery of standards, engagement practices, monitoring, intervention services, assessments, and parent communication. The goal is twofold: to raise the level of instructional services provided by the teacher, with the additional benefit that students receive from better instructional practices that are consistently administered. This action is the most effective use of funds to meet the instructional goals for the unduplicated populations at all sites, as professional development and training are essential to providing the services that increase access and performance for unduplicated students. It is aligned with having highly effective teachers in classrooms who have received new teacher training and professional development. This action is LEA wide though it is principally directed to support Unduplicated students who are commonly assigned new teachers in the profession or our least senior teaching staff. This action will benefit all students as providing Professional Development on the teaching standards and induction for new teachers allows for sustainability and increased performance for our students and classrooms comprised primarily of Unduplicated students.	(Metrics 1.1–1.16; 1.20-1.26: CAASPP ELA & Math; Graduation)

Goal 1, Action 9 Professional Development Day Costs for All Teachers (1 1/2 days)	Unduplicated pupils' academic achievement in mathematics and literacy, and acquisition of English for EL students. The action being developed is based on the needs of English learners, socioeconomically disadvantaged students (low-income students), and students experiencing homelessness in the entire district. Professional Development will be identified based on the needs of the district to support these populations. It will then be planned and delivered to all instructional staff to improve academic performance for unduplicated students across the entire school district. The following data set provides the reader with additional data for comparative purposes. ELA SBAC data indicate the following need to raise the percentage of students who meet or exceed the standard from the following 2022-23 baseline: All (58.43%); ELs (13.41%); SEDs (47.15%); Homeless (42.86%) Math SBAC data indicates the following need to raise the percentage of students who meet or exceed the standard from the following 2022-23 baseline: All (44.40%); ELs (15.14%); SEDs (32.74%); Homeless (28.58%) 22-23 ELPAC making progress rate is 57.7%. 2022-23 reclassification rate is 20.7%	This action meets the needs of our UDP population, asit is principally directed to support unduplicated student populations, which will allow for more focused time with ELs at risk of becoming LTELs, and in small group instruction to support the math and literacy achievement of our unduplicated students. This is to ensure students are on grade level academically before entering middle school. The training will focus on dimensions of diversity, equity, and inclusion as they impact the teaching and learning of students who are low-income, experiencing homelessness, and English learners. Specific curricular supplemental resources, instructional strategies, monitoring systems, interventions, and outcomes will be components of the training. The goal of the training is to raise teaching and learning so that unduplicated students benefit from the work of the instructional staff in getting students more successful in their academic career while also attending to social-emotional learning. The focus of professional development is on the delivery of instruction and research-based strategies to differentiate instruction for unduplicated student groups. English learners and low-income students will benefit from the focus on their instructional needs and the subsequent delivery of lessons by teachers. This action is LEA-wide as it will improve services for all students throughout the district, regardless of school site, grade, or instructional program, as teachers learn and grow in their profession to meet the current needs of students.	(Metrics 1.1–1.16; 1.20-1.26: CAASPP ELA & Math; Graduation)

Goal 1, Action 10 Elementary Response to Intervention for Reading/Language Arts and Math	Unduplicated pupils' academic achievement in mathematics and literacy, and acquisition of English for EL students. The action being developed is based on the needs of English learners and socioeconomically disadvantaged students (low-income students). The following data set provides the reader with additional data for comparative purposes. ELA SBAC data indicate the following need to raise the percentage of students who meet or exceed the standard from the following 2022-23 baseline: All (58.43%); ELs (13.41%); SEDs (47.15%); Homeless (42.86%) Math SBAC data indicates the following need to raise the percentage of students who meet or exceed the standard from the following 2022-23 baseline: All (44.40%); ELs (15.14%); SEDs (32.74%); Homeless (28.58%) 22-23 ELPAC making progress rate is 57.7%. 2022-23 reclassification rate is 20.7% The data indicate that the needs of English learners and low-income students are significant.	This action is designed to meet the academic needs of UDP population who fall below grade level, as Intervention teachers and instructional assistants will: - Provide direct intervention to students at skill level provided by certificated classroom and intervention teachers using research-based materials - Utilize full-time curriculum specialists (at elementary) to provide direct support to students and manage the program - Utilize part-time intervention teachers and instructional assistants to provide direct support to students - Provide direct intervention for underperforming students by certificated classroom and intervention teachers and instructional assistants - Utilize full-time curriculum specialists (at elementary) to provide direct support to students and manage the program - Utilize part-time intervention teachers and instructional assistants to provide direct support to students - When english or math intervention classes cannot be secured because of staffing, the budget funds can be used for aide support or supplemental materials. The outcome is to have students master State standards through the delivery of instruction that has high engagement practices, monitoring, assessments, and parent communication. This action is the most effective use of funds to meet the instructional goals for the unduplicated populations at these sites, as unduplicated students have increased knowledge gaps and performance compared to their peers. RTI is particularly effective in helping students stay at grade level and avoid the need for special education services. This action is LEA-wide as it will improve services for all students below grade level throughout the district to receive needed support through small group instruction, regardless of school site, grade, or instructional program.	(Metrics 1.1–1.16; 1.20-1.26: CAASPP ELA & Math; Graduation)

Goal 1, Action 11 Middle School School Psychologist (2.0 FTEs)	Unduplicated pupils' access to academics in mathematics and literacy, and acquisition of English for EL students. Approximately 40% of middle school students qualify for free/reduced lunch and about 20% of these same students experience a high rate of D/F grades. Additionally, about 10% of students in middle schools are English learners. These two psychologist positions serve all unduplicated populations.	This action meets the needs of our UDP population, as these two psychologist positions serve all unduplicated populations. They assess students, work with teachers to support the learning needs of students, provide professional development, consult with parents, and assist administrators. The work of the psychologists will help to lower the D/F rates of middle school students, increase attendance and increase test scores. The impact on English learners will be to maintain and increase performance on their daily work and the ELPAC. This action is the most effective use of funds to meet the instructional goals for the unduplicated populations at these sites, as experience has demonstrated that they have significant populations of students who don't have access to psychological services outside of school within their unduplicated student populations. This action is LEA-wide as it will allow access to students throughout the district, who have outside factors or basic needs that need to be met to engage in school and succeed academically. Services will include access to mental health services, behavioral interventions, and identification of disabilities or other factors impeding academic success.	Metrics 1.20-1.28 (Graduation Rates)

Goal 1, Action 12 Behavior Specialists	Unduplicated pupils' access to academics in mathematics and literacy, and acquisition of English for EL students. Behavior Specialists at schools will work with low-income, students experiencing homelessness, and English learners. These Behavior Specialists will be working exclusively with the schools with high populations of targeted student subgroups. Anecdotal data indicates a rise in the number of students who have increasing behavior and academic needs. At the elementary level especially, the number of students requiring greater assistance has dramatically increased over the past three years going from one/two students in severe need to over 20 students across the district. Students are displaying major meltdowns and become physical to their peers and adults. Their parents are in crisis mode as they also want to work with their children and school staff. This service provided through the school system is critically important to the identified subgoups as they often time struggle to arrange these services from the home or outside of school.	This action meets the needs of our UDP population, as behavior specialists work with teachers, instructional staff, DTTs, administrators, and parents. Behavior specialists participate in student study teams, 504s, and Special Education. Supporting low-income and English learners will result in increased access to instruction, more focused students, greater attendance, and increased achievement as measured by SBAC data and attendance. This action is the most effective use of funds to meet the instructional goals for the unduplicated populations at all sites, as they have significant behaviors within the unduplicated student populations across the district. Behavior Specialists specialize in working with staff to avoid these behaviors as opposed to responding to them. They add value to our other services directed towards the unduplicated population. This action is LEA-wide to support all students who have behavioral needs that impede their ability to succeed academically. This is being implemented LEA-Wide as these supports are needed across all grade levels and sites to provide behavioral interventions, monitoring, and strategies to preclude behavioral outbursts.	Goal 1 Metric 42 (Expulsions)

Goal 1, Action 14 Full Time Curriculum Specialists for all elementary schools	Unduplicated pupils' academic achievement in mathematics and literacy, and acquisition of English for EL students. The action being developed is based on the needs of English learners and socioeconomically disadvantaged students (low-income students). The following data set provides the reader with additional data for comparative purposes. ELA SBAC data indicates the following need to raise the percentage of students who meet or exceed the standard from the following 2022-23 baseline: All (58.43%); ELs (13.41%); SEDs (47.15%); Homeless (42.86%) Math SBAC data indicates the following need to raise the percentage of students who meet or exceed the standard from the following 2022-23 baseline: All (44.40%); ELs (15.14%); SEDs (32.74%); Homeless (28.58%)	This action meets the needs of our UDP population, as the Curriculum Specialists for all elementary schools will increase or improve services through the following duties and tasks: Manage site assessments (including ELPAC) Manage and supervise site RTI program to support underperforming students Organize and conduct professional development Analyze data and review with staff Demonstrate lessons Provide direct intervention services to underperforming students in targeted subgroups, including low-income students, English learners, and students experiencing homelessness This action represents the most effective use of funds to meet instructional goals for unduplicated student populations, as site and district leadership have observed that teachers respond more positively to peer-led support than to guidance from administration or external entities. Grounded in social learning theory, this approach recognizes that educators, like students, learn best through collaboration, modeling, and shared practice within trusted communities. By fostering peer-driven professional development, schools promote sustainable instructional improvement and equity-focused outcomes. This action is school-wide as it benefits all students to receive rigorous instruction at grade level. It is principally directed to support small-group instruction, standards implementation, SDAIE strategies, and in-class interventions with elementary teachers. This is to ensure students are on grade level academically before entering middle school. Curriculum Specialists support teachers in providing interventions, planning around assessment data, and best instructional practices for providing unduplicated students with access to grade-level curriculum. Curriculum specialists standardize instructional practices across classrooms and schools, ensuring that all students, regardless of background, receive access to high-quality learning experiences. They also help align curriculum with state standards and district goals, promoting coherence and equity.	(Metrics 1.1–1.16; 1.20-1.26: CAASPP ELA & Math; Graduation)

Goal 1, Action 15 Library Coordinators at Elementary Schools	Unduplicated pupils' access to a variety of literature for use at home and at school. The LCAP Committee continues to identify a need to provide unduplicated students access to libraries and technology computer labs during the school day to support student learning and therefore recommends that this remain an action for the 2023-24 LCAP. Access to primary language materials, software programs, and guided supplemental instructional lessons provided students with access to relevant and meaningful learning experiences to encourage and advance learning across all content areas. Library aides and multimedia technology specialists provide improved or increased services principally directed toward unduplicated students with 21st-century learning styles, specifically for students who may not have access to these services at home or in the community. This is an ongoing action from the 2017-2020 LCAP. Student achievement data shows that English learners, and students experiencing homelessness perform well in elementary schools, and the reclassification rates are relatively high and stable. Unduplicated student groups will be better equipped in English Language Arts as measured by District assessments.	This action meets the needs of our UDP population, as Library Coordinators will provide focused services to English Learners, socioeconomically disadvantaged students, and students experiencing homelessness through the services that they provide. Services include a concentration on literacy-based skills phonics, word recognition, comprehension, and other age-appropriate literacy standards. Stock and weed collections Manage information systems Manage school-wide Accelerated Reader Program Provide direct services to classes and targeted subgroup students Provide after school access to the library for targeted subgroup students Research consistently shows that certified school librarians and well-supported library programs are strongly correlated with improved student outcomes. In schools with full-time librarians, students score higher on standardized reading and writing tests, and these benefits are especially pronounced among at-risk populations, including low-income students, students of color, and students with disabilitie This action is LEA-wide as it will benefit all students to have access to books and have books read to them, though it is principally directed to Unduplicated students who may not have families at home to provide guidance for books or to read to them in English because of language barriers or time constraints with working long hours or two jobs.	Metrics 1.1-1.8 (CAASPP ELA)

Goal 1, Action 16 Targeted support for Twice Exceptional students who qualify as GATE and are UDP	Unduplicated pupils' academic achievement in mathematics and literacy, and acquisition of English for EL students for students identified as twice exceptional (GATE & UDP). These students have demonstrated additional need for teacher training and Professional Development so that the appropriate learning environment can be created to meet their learning needs.	This action will meet the needs of UDP students as it is an increased service to these unduplicated student groups, as they benefit from participating in the GATE program and are challenged by the activities implemented through the program. Research shows that students from families facing challenges such as poverty, homelessness, or learning English are often underrepresented in Gifted and Talented Education (GATE). This action supports equitable identification UDP students by applying principles from culturally responsive teaching, which emphasize recognizing and nurturing diverse forms of intelligence and potential. By addressing systemic barriers, schools ensure that students' academic strengths are not overlooked due to external circumstances. This action is LEA-wide as it will benefit all students; it is being implemented across K-8 schools to ensure equitable access to services by utilizing best practices for the identification and support of GATE students, such as universal screening tools for identification and Universal Design for Learning for multi-modal instruction.	Metrics 1.8 & 1.16 (CAASPP ELA & MATH)

Goal 1, Action 17 Elementary Assistant Principals (Miller & Jefferson 2 FTE)	Unduplicated pupils' academic achievement in mathematics and literacy, and acquisition of English for EL students. Additionally, the a need to support and address behavioral challenges in our unduplicated population that result in increased suspensions, attendance concerns, and impede academic access for this population of students.	The Assistant Principals for these two elementary schools will meet the needs of our UDP population by increasing or improving services through the following duties and tasks: Manage site assessments (including ELPAC) Manage and supervise all teachers in addition to site RTI program to support underperforming students Organize and conduct professional development Analyze data and review with staff Demonstrate lessons Provide administrative services to underperforming students in targeted subgroups, including low-income students, English learners, and students experiencing homelessness APs often manage critical aspects of school life, including: - Discipline and behavior systems - Scheduling and staffing - Facilities and safety - Family and community engagement 2 Their work ensures that schools run smoothly and that principals can focus on strategic leadership. When APs are supported and empowered, they help create positive, inclusive, and high-functioning school environments. This is the most effective use of funds as Assistant Principals are more effective than curriculum specialists and auxiliary staff, as they were found insufficient to meet the needs of a large-population elementary school. Drawing from systems theory and organizational learning, this decision reflects an understanding that sustainable change occurs when solutions are tailored to the unique dynamics and capacity of the school environment. Investing in site-specific strategies ensures resources directly support instructional goals and student outcomes. This action is school-wide and is being implemented at our two largest elementary schools to ensure equitable access to services, recognizing that these two schools share comparable instructional needs in supporting a larger general population and subsequent large unduplicated student population.	(Metrics 1.1–1.16; 1.20-1.26: CAASPP ELA & Math; Graduation)

Goal 1, Action 20 Culturally Responsive Pedagogy PD (K-12 PLCs in ELA & Math)	Unduplicated pupils' academic achievement in mathematics and literacy, and acquisition of English for EL students. The action being developed is based on the needs of English learners and socioeconomically disadvantaged students (low-income students). The following data set provides the reader with additional data for comparative purposes. ELA SBAC data indicates the following need to raise the percentage of students who meet or exceed the standard from the following 2022-23 baseline: All (58.43%); ELs (13.41%); SEDs (47.15%); Homeless (42.86%) Math SBAC data indicates the following need to raise the percentage of students who meet or exceed the standard from the following 2022-23 baseline: All (44.40%); ELs (15.14%); SEDs (32.74%); Homeless (28.58%) 22-23 ELPAC making progress rate is 57.7%. 2022-23 reclassification rate is 20.7% The data indicate that the needs of English learners and low-income students are significant.	Culturally Responsive Pedagogy PD will create time and space for teachers to work in professional learning communities with identified lead teachers, site administration, and district administration. Collaboration will be focused on instructional practices, including our district's work in diversity, equity, and inclusion, as well as the following: - Equity in grading - Best practices in culturally relevant instruction - Research interventions - The DuFour's essential questions for professional learning communities - Local data from formative assessments and district benchmarks - Plan-Do-Study-Act Cycles Culturally responsive pedagogy is a student-centered approach that integrates students' cultural backgrounds into all aspects of learning. Research shows that when students see their identities reflected in the curriculum and pedagogy, they are more engaged, motivated, and successful 1. CRP helps bridge the cultural disconnect that often exists between teachers and students, especially in diverse and low-income school settings. This is the most effective use of funds to meet the needs of our unduplicated pupil (UDP) population, as we are utilizing research-based collaboration protocols such as Professional Learning Communities, Plan-Do-Study-Act Cycles, and Instructional Rounds to improve instruction. Grounded in culturally responsive pedagogy and adult learning theory, these collaborative models empower educators to reflect on practice, share strategies that honor students' diverse backgrounds, and adapt instruction to better meet the academic and cultural needs of all learners. This action is LEA wide as it will benefit all students, though it is principally directed to support improved implementation of standards and good first instruction, which will allow for more focused lessons, instructional practices, and equity in grading for ELs at risk of becoming LTELs, and instruction to support the math and literacy achievement of our unduplicated students. This is to ensure students are on grade level academically before entering middle school.This action is being implemented across all schools to ensure equitable access to academic programming.	Metrics 1-16 (CAASPP ELA & MATH), 20-29 (Graduation Rates), & 34-39 (HS Dashboard Indicators)

Goal 1, Action 21 RTI Assessment Programs (i-Ready Assessment & School City)	Unduplicated pupils' academic achievement in mathematics and literacy, and acquisition of English for EL students. The action being developed is based on the needs of English learners and socioeconomically disadvantaged students (low-income students). The following data set provides the reader with additional data for comparative purposes. ELA SBAC data indicates the following need to raise the percentage of students who meet or exceed the standard from the following 2022-23 baseline: All (58.43%); ELs (13.41%); SEDs (47.15%); Homeless (42.86%) Math SBAC data indicates the following need to raise the percentage of students who meet or exceed the standard from the following 2022-23 baseline: All (44.40%); ELs (15.14%); SEDs (32.74%); Homeless (28.58%) 22-23 ELPAC making progress rate is 57.7%. 2022-23 reclassification rate is 20.7% The data indicate that the needs of English learners and low-income students are significant.	RTI Assessment Programs will provide students, staff, and families with performance data to make data-driven decisions regarding interventions for individual, small-group, and whole-group instructional practices. Data will be used to guide professional learning community work in course-alike cohorts as well as grade-level cohorts. Local data is essential in meeting the local indicators on the CA Dashboard. These local assessments will help measure the successful implementation of California State Standards. This action is the most effective use of funds to meet the instructional goals for unduplicated populations across all sites, as there is a significant need for timely, actionable data to guide instructional supports. Research-based practices emphasize the importance of formative assessment and data-driven decision-making in improving student outcomes, particularly for historically underserved groups. Other alternatives were considered but did not provide the real-time, formative data necessary to drive immediate and impactful changes in instructional practice. This action is LEA wide though as it will benifit all students even though it is principally directed to provide formative performance data for unduplicated populations, which will allow for more focused work with ELs at risk of becoming LTELs, and groupings or identification of Unduplicated students needing small group instruction to support the math and literacy achievement of our unduplicated students. This is to ensure students are on grade level academically before entering the next grade level. This action is being implemented across all schools to ensure equitable access to assessment data, recognizing that each school shares comparable instructional and data needs to support their unduplicated student populations by making informed decisions and planning based on comparable and relevant data.	Metrics 1-16 (CAASPP ELA & MATH), 20-29 (Graduation Rates), & 34-39 (HS Dashboard Indicators)

Goal 1, Action 22: Outdoor Science School Support Funding	CAST (Science) Data indicates the following need to raise the percentage of students who meet or exceed the standard from the following 2023-24 baseline in 5th grade: All (45.94%) ; ELs, (4.39%); SEDs (31.37%); Homeless (**%); 22-23 ELPAC making progress rate is 57.7%. The 2022-23 reclassification rate is 20.7% The data indicate that the needs of English learners and low-income students are significant. The outcome is to have students master State standards through the delivery of instruction that has high engagement practices, monitoring, assessments, and parent communication.	Exposure to outdoor science will increase interest and motivation to improve mastery in the subject of science. The Outdoor Science School gives students opportunities to experience science firsthand that cannot be replicated in a standard classroom. The outcome is to have students master State standards through the delivery of instruction that has high engagement practices, monitoring, assessments, and parent communication. This action is the most effective use of funds to meet the instructional goals for unduplicated populations at elementary sites. District experience has demonstrated the value of the outdoor science school program as a hands-on, experiential learning opportunity that aligns with culturally responsive pedagogy by engaging students in real-world contexts that reflect diverse ways of knowing and learning. Research supports experiential and place-based education as effective strategies for increasing engagement and achievement, especially for students from historically underserved backgrounds, making this investment a priority in our LCAP and budgeting. This action will benefit all students as schools will be able to send all classrooms and students. Teachers will be able to further student knowledge by incorporating this experience into their instruction. This action is being implemented across all elementary schools to ensure equitable access to services, recognizing that each school shares comparable instructional needs in supporting their unduplicated student populations and the ability to support sites that are financially struggling to support their population of unduplicated students.	Goal 1 Metric 44 (CAST)

Goal 2, Action 1 Monterey Teachers (4.0 FTEs)	Unduplicated pupils' who are credit deficient with needs to recover credits to be on-track to graduate. The continuation high school program allows an academically supportive environment, especially for English learners and Socio-Economically Disadvantaged students who make up a large portion (58% Unduplicated) of the learning environment, to thrive with the general population of students who are behind in credits. Oftentimes, these students have been unsuccessful because of chronic absenteeism or because they could not manage the larger comprehensive high school which was too big for them. The district experience has been that students who are in smaller classes with personalized attention from a certificated teacher perform better academically. Additionally, the district has designed flexibility in the academic program for the continuation school with students being able to access the curriculum online as well as in the traditional manner. This action item will allow for class size reduction so that there are 10 to 12 fewer students per class. The data from the California Dashboard on graduation rates is evidence that this action is the most effective use of funds as it allows students the opportunity to recover credit to meet diploma requirements. This is an ongoing action from the 2017-2020 LCAP. Student achievement data shows that English learners, and students experiencing homelessness will achieve in this high school environment.	Four additional teachers at Monterey High School will provide instructional services to unduplicated students in the continuation school environment. - The continuation high school serves a large number of students who represent our low-income students, English learners, and homeless students. - Will increase services to unduplicated students by giving teachers greater opportunities to provide individualized instruction to meet unique student needs. - Low-income, English learners, and homeless youth within this smaller setting will receive small group instruction more regularly, increased 1:1 instruction, closely monitored academic progress, and increased intervention beginning with Tier I and then advancing to Tier II as needed - Increasing teachers will improve communication with parents about the academic and behavioral progress of the unduplicated students on this campus. This is the best use of funds, as credit recovery programs offer students who have failed core courses a second chance to earn the credits needed for graduation. Research shows that 89% of U.S. high schools offer credit recovery, and many districts are expanding these programs to meet growing demand. These programs are especially vital for students who struggle academically in 9th grade, a key predictor of dropout risk. Continuation programs provide flexible pathways for students who face personal, academic, or economic challenges, helping them stay engaged and complete their education. This action is school-wide, as all students at the continuation school will benefit from increased access to curriculum and courses by making available smaller class sizes, flexible scheduling to recover credits while earning new credits. These services will benefit unduplicated students at an increased rate due to the high percentage of unduplicated students at our continuation school.	Goal 2 Metrics 2-8 & 12 (Graduation Rates)

Goal 2, Action 2 Family Services Agency of Burbank (FSA) Counseling Program	Unduplicated mental health and wellness needs are increasing at a rate higher than the general population. English learners and low-income students have shown to have limited access to personal counseling as these families have voiced the inability to procure these services on their own. Research shows that when students are feeling emotionally safe, they are focused on their studies and perform better academically. Unduplicated student groups benefit from this service, as targeted funding gives an avenue for students to seek assistance from an outside agency, as students may not feel comfortable talking with school district staff. Students may feel more comfortable talking with someone who has less affiliation with the school.	The Family Services Agency of Burbank (FSA) provides counseling and mental health services for low-income students, English learners, and homeless students. Academic achievement counseling may also occur depending on the student's needs. The result will be a student who has someone to turn to and help to work with through crisis situation and positively impact his/her academic, social-emotional, and behavioral issue. This action is the most effective use of funds to meet the mental health needs of the unduplicated populations at all sites, as local experience has demonstrated UDP students have limited access to these services outside of school and benefit greatly from access within the school day. This Action is LEA wide as it will benefit all students to have increased access to mental health suervices. It is principally directed to support Unduplicated students receive services they may not have access to outside of school. This action is being implemented across all schools to ensure equitable access to services, recognizing that each school shares comparable mental health needs in supporting their unduplicated student populations.	Goal 2 Metric 10, 11, 12, 13, 16, & 17 (Attendance, Discipline, & School Climate)

Goal 2, Action 3 Secondary Summer School Credit Recovery	Unduplicated pupils' who are credit deficient with needs to recover credits to be on-track to graduate. A large portion of students who take advantage of this learning opportunity is a part of the unduplicated student group. The D/F failure rate is at about 15% and therefore the need for a summer makeup opportunity is great. The opportunities that are provided to students during the summer are in all the core academic areas: English, math, science, and social studies. This program is effective because sometimes a student has only failed one semester of a course, which makes it impossible to remediate during the regular school year when the district does not offer semester-long courses. Additionally, the summer school offerings are not limited to just general education students. The program addresses the needs of Socio-Economically Disadvantaged students and English Language Learners.	Provide opportunities for high school students who have failed one or more courses during the regular school year to make up credits. The failure rate of students who are low-income, English learners, and students experiencing homelessness is at a higher rate than other student subgroups. Credit recovery opportunities help students towards course completion, which leads to graduation. This action is the most effective use of funds to meet the instructional goals for the unduplicated populations at these sites, as they have significant populations in need of credit recovery and/or credits toward graduation within their unduplicated student populations. Credit recovery programs offer students who have failed core courses a second chance to earn the credits needed for graduation. Research shows that 89% of U.S. high schools offer credit recovery, and many districts are expanding these programs to meet growing demand. These programs are especially vital for students who struggle academically in 9th grade, a key predictor of dropout risk. This action is being implemented to support all students to ensure equitable access to services, recognizing that unduplicated students across all schools in the district are supporting their unduplicated student populations to stay on grade level and meet graduation requirements. This action is LEA wide though it is principally directed to support unduplicated students to recover credits over the summer to be on-track for gratuation.	Goal 2 Metrics 1 - 8 & 12 (Graduation Rates)

Goal 2, Action 4 Elementary Wellness & Behavior Specialists (3 FTE)	Unduplicated students often experience chronic absenteeism, frequent tardiness, and/or significant behavioral challenges. Research indicates that when students feel emotionally safe, they are more focused and perform better academically. Elementary principals have identified a need for staff who can respond effectively to students in crisis and collaborate with parents to address attendance issues.	This action meets the needs of our UDP population, as Elementary Wellness and Behavior Specialists will specialize in providing interventions when students have chronic absences; tardy absences, and/or significant behaviors. - Provide 3.0 FTE to serve all elementary schools - Concentrate focus on attendance and behaviors. - Focus is also on character building especially for students in LACP subgroups. - Particularly, a focus on addressing chronic absenteeism. The district will access the services from LACOE and school sites will be given training and assistance from the Department of Student Services. This action is the most effective use of funds to meet the behavioral and attendance needs for the unduplicated populations at elementary sites. As the attendance and behavioral support programs we provide are rooted in Maslow's Hierarchy of Needs and Bronfenbrenner's Ecological Systems Theory, which emphasize that students must have their basic physical, emotional, and social needs met before they can fully engage in learning. For students facing economic hardship, language barriers, or unstable living situations, consistent school attendance and positive behavioral reinforcement create a stable, supportive environment that fosters academic engagement. This action will benefit all students as it will provide increased awareness of socio-emotional learning and opportunities for students to build positive relationships. This action is being implemented across all elementary schools to ensure equitable access to services, recognizing that each school shares comparable instructional needs in supporting their unduplicated student populations.	Goal 2 Metrics 9 - 14 (Discipline/School Climate)

Goal 2, Action 6 School Climate & Mental Health Surveys (Hanover)	Unduplicated students have demonstrated gaps in access to resources, mental health supports, and reduced family engagement with the school and district. There is a need to develop instruments that increase and improve communication with UDP families to better understand the exact needs of our UDP students so that services and resources can be directed to best support families with gaps in access to essential services and supports. Regional data does not consistently mirror the specific needs of our community, so a survey instrument provided by Hanover, tailored to our community, allows for data to be analyzed that represents our community's needs.	This action meets the needs of UDP students as it facilitates BUSD surveys of students, families, and staff annually to collect data on a variety of metrics that give us insight into the perspectives, perceptions, and experiences our students, families, and staff have. We collect and analyze this data through an outside vendor to allow our participants to remain anonymous. Additionally, the results of these surveys help us measure growth in the metrics section of the LCAP. This action is the most effective use of funds to meet the district goals for the unduplicated populations at all sites, as the experience of our site and district administration team in BUSD has validated through local experiences that soliciting feedback is essential to providing a safe and welcoming environment, as well as knowledge and participation in our instructional programs. This action is LEA-wide as it will benefit all students to obtain data and information on how best we can engage, increase, and improve services for unduplicated students.	Goal 2 Metrics 15-17 (School Climate)

Goal 2, Action 7 Partial SOAR Program Staffing (CDS) (1 teacher; 1 para; 2 specialists)	Unduplicated pupils' academic achievement in mathematics and literacy, and acquisition of English for EL students who have behavior patterns that violate education code on a regular basis. The action being developed is based on the needs of English learners, socioeconomically disadvantaged students (low-income students), and foster youth. The following data set provides the reader with additional data for comparative purposes. ELA SBAC data indicates the following need to raise the percentage of students who meet or exceed the standard from the following 2022-23 baseline: All (58.43%); ELs (13.41%); SEDs (47.15%); Homeless (42.86%); Foster (**%). Math SBAC data indicates the following need to raise the percentage of students who meet or exceed the standard from the following 2022-23 baseline: All (44.40%); ELs (15.14%); SEDs (32.74%); Homeless (28.58%); Foster (**%). 22-23 ELPAC making progress rate is 57.7%. 2022-23 reclassification rate is 20.7% The data indicate that the needs of English learners and low-income students are significant. **% Population too small for public results for this subgroup.	This action item will provide the necessary resources to run smaller class sizes at the SOAR program for our targeted subgroups of students. The SOAR program allows an academically supportive environment for English Learners, socioeconomically disadvantaged, and foster youth to thrive with the general population of students who are behind in credits. Oftentimes, these students have been unsuccessful because of chronic absenteeism or because they had behavioral issues that impeded their ability to learn. This action item will allow for class size reduction so that there are 10 to 12 fewer students per class. Smaller class sizes allow teachers to provide students with direct, interactive instruction as individuals and in small groups. English learners, Foster Youth, and Socio-Economically Disadvantaged students often have learning gaps that require more individual attention. Smaller class sizes provide more opportunities for longer and more frequent teacher/student/teacher instruction and interaction This action is the most effective use of funds to meet the instructional goals for the unduplicated populations, as they have significant populations in need of an alternative education pathway that supports access to curriculum regardless of their behavioral challenges. The data from the California Dashboard on graduation rates is evidence that this action is the most effective use of funds, as it allows students the opportunity to recover credit to meet diploma requirements. The district experience has been that students who are in smaller classes with personalized attention from a certificated teacher perform better academically. Additionally, the district has designed flexibility in the academic program for the SOAR Program, with students being able to access the curriculum online as well as in the traditional manner. This action is LEA-wide as it will benefit all students who will also benefit from an alternative setting due to mounting suspensions and other conduct that does not allow them to remain engaged and enrolled in a comprehensive school site.	Goal 2 Metrics 2-8 & 12 (Graduation Rates & Discipline)

Goal 3, Action 1 Diversity, Equity, & Inclusion Site Teacher Lead Stipends	Unduplicated pupils' academic achievement in mathematics and literacy, and acquisition of English for EL students. Marginalized students within the unduplicated population have demonstrated additional need for teacher training and Professional Development so that the appropriate learning environment can be created to meet their learning needs. The action being developed is based on the needs of English learners and socioeconomically disadvantaged students (low-income students). The following data set provides the reader with additional data for comparative purposes. ELA SBAC data indicates the following need to raise the percentage of students who meet or exceed the standard from the following 2022-23 baseline: All (58.43%); ELs (13.41%); SEDs (47.15%); Homeless (42.86%) Math SBAC data indicates the following need to raise the percentage of students who meet or exceed the standard from the following 2022-23 baseline: All (44.40%); ELs (15.14%); SEDs (32.74%); Homeless (28.58%). 22-23 ELPAC making progress rate is 57.7%. 2022-23 reclassification rate is 20.7% The data indicate that the needs of English learners and low-income students are significant.	This action addressses the neesd of UDP students as a continued extension and progression of the professional development, training, and support our campuses have received in diversity, equity, and inclusion (DEI) practices, a stipend will be given to select teachers on campus who will act as a liaison for students to receive support and voice issues or concerns regarding DEI. Teachers receiving the DEI stipend will collaborate with our DEI consultants and will assist in leading site discussions and professional development for the DEI initiative. This action is the most effective use of funds to increase equity and inclusionary practices in schools and classrooms for unduplicated students. DEI in K–12 classrooms is supported by educational theories like critical pedagogy and social learning, which emphasize empowering students and fostering empathy through inclusive environments. Culturally responsive teaching further shows that students thrive academically when their identities and experiences are reflected in the curriculum. Together, these approaches create equitable learning spaces that benefit all students. This action is LEA-wide and will benefit all students, as all students benefit when their identities and experiences are reflected in the curriculum and instruction provided in classrooms and in schools.	Goal 3 Metrics 1 & 2 (School Climate)

Goal 3, Action 2 Diversity, Equity, & Inclusion Site Lead Collaboration Time	Unduplicated pupils' academic achievement in mathematics and literacy, and acquisition of English for EL students. Marginalized students within the unduplicated population have demonstrated additional need for teacher training and Professional Development so that the appropriate learning environment can be created to meet their learning needs. The action being developed is based on the needs of English learners and socioeconomically disadvantaged students (low-income students). The following data set provides the reader with additional data for comparative purposes. ELA SBAC data indicates the following need to raise the percentage of students who meet or exceed the standard from the following 2022-23 baseline: All (58.43%); ELs (13.41%); SEDs (47.15%); Homeless (42.86%) Math SBAC data indicates the following need to raise the percentage of students who meet or exceed the standard from the following 2022-23 baseline: All (44.40%); ELs (15.14%); SEDs (32.74%); Homeless (28.58%) 22-23 ELPAC making progress rate is 57.7%. 2022-23 reclassification rate is 20.7% The data indicate that the needs of English learners and low-income students are significant.	This action addressses the neesd of UDP students as a continued extension and progression of the professional development, training, and support our campuses have received in diversity, equity, and inclusion (DEI) practices, a stipend will be given to select teachers on campus who will act as a liaison for students to receive support and voice issues or concerns regarding DEI. Teachers receiving the DEI stipend will collaborate with our DEI consultants and will assist in leading site discussions and professional development for the DEI initiative. This action is the most effective use of funds to increase equity and inclusionary practices in schools and classrooms for unduplicated students. DEI in K–12 classrooms is supported by educational theories like critical pedagogy and social learning, which emphasize empowering students and fostering empathy through inclusive environments. Culturally responsive teaching further shows that students thrive academically when their identities and experiences are reflected in the curriculum. Together, these approaches create equitable learning spaces that benefit all students. This action is LEA-wide and will benefit all students, as all students benefit when their identities and experiences are reflected in the curriculum and instruction provided in classrooms and in schools.	Goal 3 Metrics 1 & 2 (School Climate)

Limited Actions

For each action being solely provided to one or more unduplicated student group(s), provide an explanation of (1) the unique identified need(s) of the unduplicated student group(s) being served, (2) how the action is designed to address the identified need(s), and (3) how the effectiveness of the action in improving outcomes for the unduplicated student group(s) will be measured.

Goal and Action #(s)	Identified Need(s)	How the Action(s) are Designed to Address Need(s)	Metric(s) to Monitor Effectiveness
Goal 1, Action 2 Elementary ELD Specialists	The action being developed is based on the needs of English learners. The following data set provides the reader with additional data for comparative purposes. ELA SBAC data indicates the following need to raise the percentage of students who meet or exceed the standard from the following 2022-23 baseline: ELs (13.41%). Math SBAC data indicates the following need to raise the percentage of students who meet or exceed the standard from the following 2022-23 baseline: ELs (15.14%). 22-23 ELPAC making progress rate is 57.7%. 2022-23 reclassification rate is 20.7%	English Language Development Specialists will support English Learners as they: - Organize and conduct professional development in Designated ELD - Monitor progress of English Learners and recently reclassified students - Support Project G.L.A.D. and Step up to Writing training and program implementations - Assist in the analysis of data and review with staff - Provide demonstration lessons - Participate in SST's, IEP's, and the development of ILP's for English learners - Provide direct intervention services to English Learners The work of ELD specialists provide support to teachers, instructional assistants and students will result in increases (or maintaining when at a high level like reclassification rate) in student achievement and teacher/instructional assistant effectiveness.	Goal 1 Metrics 2, 10, 17, & 18 (EL CAASPP & Reclassification of ELs)
Goal 1, Action 3 Elementary ELD Instructional Assistants	The action being developed is based on the needs of English learners. The following data set provides the reader with additional data for comparative purposes. ELA SBAC data indicate the following need to raise the percentage of students who meet or exceed the standard from the following 2022-23 baseline: ELs (13.41%). Math SBAC data indicate the following need to raise the percentage of students who meet or exceed the standard from the following 2022-23 baseline: ELs (15.14%). 22-23 ELPAC making progress rate is 57.7%. 2022-23 reclassification rate is 20.7%	English Language Development Instructional Assistants will: - Provide additional hourly support in E/LA and ELD at the elementary level - Work with small groups of students to allow for differentiation and Tier II intervention - Assist teachers in the implementation of the ELD program - Assist teachers in the implementation of the RtI program The work of ELD instructional assistants provide support to teachers and students will result in increases (or maintaining when at a high level like reclassification rate) in student achievement and teacher/instructional assistant effectiveness on ELA and math SBAC.	Goal 1 Metrics 2, 10, 17, & 18 (EL CAASPP & Reclassification of ELs)

Goal 1, Action 6 Secondary Designated ELD Teachers	The action being developed is based on the needs of English learners to provide supplemental English language development instruction in addition to the core instruction provided at the site. The following data set provides the reader with additional data for comparative purposes. ELA SBAC data indicate the following need to raise the percentage of students who meet or exceed the standard from the following 2022-23 baseline: ELs (13.41%). Math SBAC data indicates the following need to raise the percentage of students who meet or exceed the standard from the following 2022-23 baseline: ELs (15.14%). 22-23 ELPAC making progress rate is 57.7%. 2022-23 reclassification rate is 20.7%	Designated ELD (additional courses) - Provide a separate, additional classes for students who are in Transition English to teach the Standards for ELD (designated ELD) - Support to secondary students who are English learners - Certificated salaries and related statutory benefits.	Goal 1 Metrics 2, 10, 17, & 18 (EL CAASPP & Reclassification of ELs)
Goal 1, Action 13 English Learner Program, Supplemental Supports	There is a need to establish a baseline ELD program for students who are working towards English proficiency as English Learners. ELA SBAC data indicate the following need to raise the percentage of students who meet or exceed the standard from the following 2022-23 baseline: ELs (13.41%). Math SBAC data indicates the following need to raise the percentage of students who meet or exceed the standard from the following 2022-23 baseline: ELs (15.14%). 22-23 ELPAC making progress rate is 57.7%. 2022-23 reclassification rate is 20.7%	The program is designed to increase or improve services by: - Provide support for English Learner students in classes by Instructional Assistants - Provide supplemental materials and supplies to support site-based English Learner programs - Provide liaison support between the school and community for translation, parent contact, and parent education - Implement and monitor the implementation of the Master Plan for English Learners	Goal 1 Metrics 2, 10, 17, & 18 (EL CAASPP & Reclassification of ELs)

Goal 1, Action 18 Secondary Sheltered ELD Sections (Social Studies and Science)	The action being developed is based on the needs of English learners. The following data set provides the reader with additional data for comparative purposes. ELA SBAC data indicate the following need to raise the percentage of students who meet or exceed the standard from the following 2022-23 baseline: ELs (13.41%). Math SBAC data indicates the following need to raise the percentage of students who meet or exceed the standard from the following 2022-23 baseline: ELs (15.14%). 22-23 ELPAC making progress rate is 57.7%. 2022-23 reclassification rate is 20.7%	Secondary Sheltered ELD Sections are designed to reduce class size or dedicate sheltered sections for ELD students in the subjects of Social Science and Science. These subjects are language intensive subjects that require additional support from instructional staff to provide small group instruction and/or differentiation. Smaller class sized or dedicated sections will allow for teaching staff to better support english learners in these core subject areas.	Goal 1 Metrics 2, 10, 17, & 18 (EL CAASPP & Reclassification of ELs)
Goal 1, Action 19 ELD Instructional Assistants, Secondary (5 FTE)	The action being developed is based on the needs of English learners. The following data set provides the reader with additional data for comparative purposes. ELA SBAC data indicates the following need to raise the percentage of students who meet or exceed the standard from the following 2022-23 baseline: ELs (13.41%). Math SBAC data indicates the following need to raise the percentage of students who meet or exceed the standard from the following 2022-23 baseline: ELs (15.14%). 22-23 ELPAC making progress rate is 57.7%. 2022-23 reclassification rate is 20.7%	English Language Development Instructional Assistants - Provide additional hourly support in E/LA and ELD at the elementary level - Work with small groups of students to allow for differentiation and Tier II intervention - Assist teachers in the implementation of the ELD program - Assist teachers in the implementation of the RtI program The work of ELD instructional assistants provide support to teachers and students will result in increases (or maintaining when at a high level like reclassification rate) in student achievement and teacher/instructional assistant effectiveness on ELA and math SBAC.	Goal 1 Metrics 2, 10, 17, & 18 (EL CAASPP & Reclassification of ELs)

Goal 2, Action 5 Homeless/Foster/At-Risk Youth Specialist	Students experiencing homelessness and foster youth students need support accessing local and regional resources. Additionally, traditional methods of communication with families are often times not accessible to families in these circumstances. A need for a staff membe who can act as an advocate on behalf of thes student group and individual students has been identified based on the fequency in which these students' ability to access the academic program as well as additional services and activities is often times overlooked or not addressed by traditional staffing.	Transportation and access to local and regiongal services will be communicated directly with families and individualized communication will be provided to Students and parents experiencing homelessness or who are placed in foster care. Students and famlies will be assisted by this staff to advocate for additional resources and considerations to be able to access the instructional programs as well as other activities and programs.	Goal 2 Metrics 5, 6, 9, 10, 11, 12, 13, & 14 (Foster & Homeless Graduation Rates, Discipline, & School Climate)

For any limited action contributing to meeting the increased or improved services requirement that is associated with a Planned Percentage of Improved Services in the Contributing Summary Table rather than an expenditure of LCFF funds, describe the methodology that was used to determine the contribution of the action towards the proportional percentage, as applicable.

NA

Additional Concentration Grant Funding

A description of the plan for how the additional concentration grant add-on funding identified above will be used to increase the number of staff providing direct services to students at schools that have a high concentration (above 55 percent) of foster youth, English learners, and low-income students, as applicable.

NA

Staff-to-student ratios by type of school and concentration of unduplicated students	Schools with a student concentration of 55 percent or less	Schools with a student concentration of greater than 55 percent
Staff-to-student ratio of classified staff providing direct services to students	NA	NA
Staff-to-student ratio of certificated staff providing direct services to students	NA	NA

Action Tables

2026-2027 Total Planned Expenditures Table

LCAP Year (Input)	1. Projected LCFF Base Grant (Input Dollar Amount)	2. Projected LCFF Supplemental and/or Concentration Grants (Input Dollar Amount)	3. Projected Percentage to Increase or Improve Services for the Coming School Year (2 divided by 1)	LCFF Carryover — Percentage (Input Percentage from Prior Year)	Total Percentage to Increase or Improve Services for the Coming School Year (3 + Carryover %)
2026-2027	$162,329,411.00	$12,617,495.00	7.77%	0.00%	7.77%

Totals:	LCFF Funds	Other State Funds	Local Funds	Federal Funds	Total Funds	Total Personnel	Total Non-personnel
Totals:	$19,880,013.22	$158,985,089.00	$0.00	$0.00	$178,865,102.22	$178,326,372.22	$538,730.00

Goal #	Action #	Action Title	Student Group(s)	Contributing to Increased or Improved Services?	Scope	Unduplicated Student Group(s)	Location	Time Span	Total Personnel	Total Non-personnel	LCFF Funds	Other State Funds	Local Funds	Federal Funds	Total Funds	Planned Percentage of Improved Services
1	1	Elementary Class Size Reduction Grades 4 and 5	All	Yes	Schoolwide	Low Income, English learner (EL)	Specific Grade Spans, 4th and 5th, Specific Schools, Disney Elementary - McKinley Elementary	Ongoing	$284,817	$0	$284,817	$0	$0	$0	$284,817	0.00%
1	2	Elementary ELD Specialists	All	Yes	Limited	English learner (EL)	Specific Grade Spans, TK - 5	Ongoing	$616,584	$0	$616,584	$0	$0	$0	$616,584	0.00%
1	3	Elementary ELD Instructional Assistants	All	Yes	Limited	English learner (EL)	Specific Grade Spans, TK - 5	Ongoing	$1,034,809	$0	$1,034,809	$0	$0	$0	$1,034,809	0.00%

1	4	Dual Immersion Teacher Cost Share	All	Yes	Schoolwide	English learner (EL), Low Income	Specific Schools, McKinley Elementary & Disney Elementary	Ongoing	$672,251	$0	$672,251	$0	$0	$0	$672,251	0.00%
1	5	Dual Immersion Instructional Assistants	All	Yes	Schoolwide	English learner (EL), Low Income	Specific Schools, Disney Elementary & McKinley Elementary	Ongoing	$149,110	$0	$149,110	$0	$0	$0	$149,110	0.00%
1	6	Secondary Designated ELD Teachers	All	Yes	Limited	English learner (EL)	Specific Grade Spans, 6-12	Ongoing	$518,108	$0	$518,108	$0	$0	$0	$518,108	0.00%
1	7	Interpreters for Second Language Learners	All	Yes	LEA-wide	English learner (EL)	All Schools	Ongoing	$70,000	$0	$70,000	$0	$0	$0	$70,000	0.00%
1	8	Induction Professional Development Teacher on Special Assignment	All	Yes	LEA-wide	Low Income, English learner (EL)	All Schools	Ongoing	$30,600	$0	$30,600	$0	$0	$0	$30,600	0.00%
1	9	Professional Development Day Costs for All Teachers (1 1/2 days)	All	Yes	LEA-wide	English learner (EL), Low Income	All Schools	Ongoing	$1,750,000	$0	$1,000,000	$750,000	$0	$0	$1,750,000	0.00%
1	10	Elementary Response to Intervention for Reading/Language Arts, Math, and Socio-Emotional Learning (SEL)	All	Yes	LEA-wide	Low Income, English learner (EL)	Specific Grade Spans, TK - 5	Ongoing	$600,000	$0	$600,000	$0	$0	$0	$600,000	0.00%
1	11	Middle School School Psychologist (2.0 FTEs)	All	Yes	LEA-wide	English learner (EL), Low Income	Specific Grade Spans, 6-8	Ongoing	$313,980	$0	$313,980	$0	$0	$0	$313,980	0.00%
1	12	Behavior Specialists (9.0 FTEs)	All	Yes	LEA-wide	English learner (EL), Low Income	All Schools	Ongoing	$984,168	$0	$984,168	$0	$0	$0	$984,168	0.00%
1	13	English Learner Program, Supplemental Supports	All	Yes	Limited	English learner (EL)	All Schools	Ongoing	$513,399	$0	$513,399	$0	$0	$0	$513,399	0.00%
1	14	Full Time Curriculum Specialists for nine elementary schools	All	Yes	Schoolwide	Low Income, English learner (EL)	Specific Grade Spans, TK - 5	Ongoing	$1,389,784	$0	$1,389,784	$0	$0	$0	$1,389,784	0.00%
1	15	Library Coordinators at Elementary Schools	All	Yes	LEA-wide	English learner (EL), Low Income	Specific Grade Spans, TK - 5	Ongoing	$433,609	$0	$433,609	$0	$0	$0	$433,609	0.00%

1	16	Targeted support for Twice Exceptional students who qualify as GATE and are included in the unduplicated count	All	Yes	LEA-wide	English learner (EL), Low Income	All Schools	Ongoing	$70,000	$0	$70,000	$0	$0	$0	$70,000	0.00%
1	17	Elementary Assistant Principals (Miller & Jefferson 2.0)	All	Yes	Schoolwide	English learner (EL), Low Income	Specific Schools, Miller & Jefferson	Ongoing	$273,447	$0	$273,447	$0	$0	$0	$273,447	0.00%
1	18	Secondary Sheltered ELD Sections (Social Studies and Science)	English learner (EL), Long-term English learner	Yes	Limited	English learner (EL)	Specific Grade Spans, 6-8	Ongoing	$519,726	$0	$519,726	$0	$0	$0	$519,726	0.00%
1	19	ELD Instructional Assistants, Secondary (5 FTE)	English learner (EL), Long-term English learner	Yes	Limited	English learner (EL)	Specific Grade Spans, 6-12	Ongoing	$846,673	$0	$846,673	$0	$0	$0	$846,673	0.00%
1	20	Culturally Responsive Pedagogy PD (K-12 PLCs in ELA & Math)	All	Yes	LEA-wide	Low Income, English learner (EL)	All Schools	Ongoing	$150,000	$0	$150,000	$0	$0	$0	$150,000	0.00%
1	21	RTI Assessment Programs (i-Ready Assessment & School City)	All	Yes	LEA-wide	English learner (EL), Low Income	All Schools	Ongoing	$0	$200,000	$200,000	$0	$0	$0	$200,000	0.00%
1	22	Outdoor Science School Support Funding	All	Yes	LEA-wide	English learner (EL), Low Income	Specific Grade Spans, 5	Ongoing	$0	$20,000	$20,000	$0	$0	$0	$20,000	0.00%
1	23	GATE Program Annual Identification Assessment Process	All	No				Ongoing	$0	$20,000	$0	$20,000	$0	$0	$20,000	0.00%
1	24	District GATE Coordinator	All	No				Ongoing	$25,658	$0	$0	$25,658	$0	$0	$25,658	0.00%
1	25	Music Instrument Repair and Replacement	All	No				Ongoing	$0	$20,000	$0	$20,000	$0	$0	$20,000	0.00%
1	26	Secondary Art Supplies and Materials	All	No				Ongoing	$0	$12,600	$0	$12,600	$0	$0	$12,600	0.00%
1	27	Provide support for students with disabilities to achieve their Individual Education Plan (IEP) goals.	All	No				Ongoing	$39,217,554	$0	$0	$39,217,554	$0	$0	$39,217,554	0.00%
1	28	Elementary Music Teachers Staffing	All	No				Ongoing	$537,498	$0	$0	$537,498	$0	$0	$537,498	0.00%
1	29	Provide CTE Pathway offerings to Secondary Students	All	No				Ongoing	$1,269,998	$0	$0	$1,269,998	$0	$0	$1,269,998	0.00%

1	30	World Language Courses at Middle Schools	Standard English Learners, Low Income, Hispanic or Latino, GATE, English learner (EL)	No				Ongoing	$399,101	$0	$0	$399,101	$0	$0	$399,101	0.00%
2	1	Monterey Teachers (4.0 FTEs)	All	Yes	Schoolwide	English learner (EL), Low Income	Specific Schools, Monterey High School (Continuation)	Ongoing	$578,862	$0	$578,862	$0	$0	$0	$578,862	0.00%
2	2	Family Services Agency of Burbank (FSA) Counseling Program	All	Yes	LEA-wide	Low Income, English learner (EL)	All Schools	Ongoing	$0	$134,130	$134,130	$0	$0	$0	$134,130	0.00%
2	3	Secondary Summer School Credit Recovery	All	Yes	LEA-wide	English learner (EL), Low Income	Specific Grade Spans, 9-12	Ongoing	$20,000	$82,000	$102,000	$0	$0	$0	$102,000	0.00%
2	4	Elementary Wellness & Behavior Specialists (3 FTE)	All	Yes	LEA-wide	English learner (EL), Low Income, Foster Youth	Specific Grade Spans, TK - 5	Ongoing	$335,532	$0	$335,532	$0	$0	$0	$335,532	0.00%
2	5	Homeless/Foster/At-Risk Youth Specialist	Foster Youth, Homeless	Yes	Limited	Foster Youth	All Schools	Ongoing	$58,580	$0	$58,580	$0	$0	$0	$58,580	0.00%
2	6	School Climate & Mental Health Surveys (Hanover)	All	Yes	LEA-wide	English learner (EL), Low Income	All Schools	Ongoing	$0	$50,000	$50,000	$0	$0	$0	$50,000	0.00%
2	7	Partial SOAR Program Staffing (CDS) (1 teacher; 1 para; 2 specialists)	All	Yes	LEA-wide	Low Income, Foster Youth, English learner (EL)	Specific Grade Spans, 9-12	Ongoing	$408,231	$0	$408,231	$0	$0	$0	$408,231	0.00%
3	1	Diversity, Equity, & Inclusion Site Teacher Lead Stipends	All	Yes	LEA-wide	English learner (EL), Low Income	All Schools	Ongoing	$100,756	$0	$100,756	$0	$0	$0	$100,756	0.00%
3	2	Diversity, Equity, & Inclusion Site Lead Collaboration Time	All	Yes	LEA-wide	English learner (EL), Low Income	All Schools	Ongoing	$25,500	$0	$25,500	$0	$0	$0	$25,500	0.00%
3	3	Certificated Personnel and Administrative Costs at the District and Site Level	All	No				Ongoing	$116,732,680	$0	$0	$116,732,680	$0	$0	$116,732,680	0.00%

4	1	Provide Facility and Maintenance Operations staff, including custodians to provide a clean, safe, and secure learning environment for all students.	All	No				Ongoing	$7,395,358	$0	$7,395,358	$0	$0	$0	$7,395,358	0.00%

2026-2027 Contributing Actions Table

1. Projected LCFF Base Grant	2. Projected LCFF Supplemental and/or Concentration Grants	3. Projected Percentage to Increase or Improve Services for the Coming School Year (2 divided by 1)	LCFF Carryover – Percentage (Percentage from prior year)	Total Percentage to Increase or Improve Services for the Coming School Year (3 + Carryover %)	4.Total Planned Contributing Expenditures (LCFF Funds)	5.Total Planned Percentage of Improved Services (%)	Planned Percentage to Increase or Improve Services for the Coming School Year (4 divided by 1, plus 5)	Totals by Type	Total LCFF Funds
$162,329,411.00	$12,617,495.00	7.77%	0.00% - No Carryover	7.77%	$12,484,655.22	0.00%	7.69%	**Total:**	$12,484,655.22
								LEA-wide Total:	$5,028,506.22
								Limited Total:	$4,107,878.64
								Schoolwide Total:	$3,348,270.36

Goal #	Action #	Action Title	Contributing to Increased or Improved Services?	Scope	Unduplicated Student Group(s)	Location	Planned Expenditures for Contributing Actions(LCFF Funds)	Planned Percentage of Improved Services (%)
1	1	Elementary Class Size Reduction Grades 4 and 5	Yes	Schoolwide	Low Income, English learner (EL)	Specific Grade Spans, 4th and 5th, Specific Schools, Disney Elementary - McKinley Elementary	$284,816.64	0.00%
1	2	Elementary ELD Specialists	Yes	Limited	English learner (EL)	Specific Grade Spans, TK - 5	$616,583.88	0.00%
1	3	Elementary ELD Instructional Assistants	Yes	Limited	English learner (EL)	Specific Grade Spans, TK - 5	$1,034,809.38	0.00%

1	4	Dual Immersion Teacher Cost Share	Yes	Schoolwide	English learner (EL), Low Income	Specific Schools, McKinley Elementary & Disney Elementary	$672,251.40	0.00%
1	5	Dual Immersion Instructional Assistants	Yes	Schoolwide	English learner (EL), Low Income	Specific Schools, Disney Elementary & McKinley Elementary	$149,109.72	0.00%
1	6	Secondary Designated ELD Teachers	Yes	Limited	English learner (EL)	Specific Grade Spans, 6-12	$518,107.98	0.00%
1	7	Interpreters for Second Language Learners	Yes	LEA-wide	English learner (EL)	All Schools	$70,000.00	0.00%
1	8	Induction Professional Development Teacher on Special Assignment	Yes	LEA-wide	Low Income, English learner (EL)	All Schools	$30,600.00	0.00%
1	9	Professional Development Day Costs for All Teachers (1 1/2 days)	Yes	LEA-wide	English learner (EL), Low Income	All Schools	$1,000,000.00	0.00%
1	10	Elementary Response to Intervention for Reading/Language Arts, Math, and Socio-Emotional Learning (SEL)	Yes	LEA-wide	Low Income, English learner (EL)	Specific Grade Spans, TK - 5	$600,000.00	0.00%
1	11	Middle School School Psychologist (2.0 FTEs)	Yes	LEA-wide	English learner (EL), Low Income	Specific Grade Spans, 6-8	$313,980.48	0.00%
1	12	Behavior Specialists (9.0 FTEs)	Yes	LEA-wide	English learner (EL), Low Income	All Schools	$984,168.42	0.00%
1	13	English Learner Program, Supplemental Supports	Yes	Limited	English learner (EL)	All Schools	$513,398.64	0.00%
1	14	Full Time Curriculum Specialists for nine elementary schools	Yes	Schoolwide	Low Income, English learner (EL)	Specific Grade Spans, TK - 5	$1,389,783.66	0.00%
1	15	Library Coordinators at Elementary Schools	Yes	LEA-wide	English learner (EL), Low Income	Specific Grade Spans, TK - 5	$433,609.14	0.00%
1	16	Targeted support for Twice Exceptional students who qualify as GATE and are included in the unduplicated count	Yes	LEA-wide	English learner (EL), Low Income	All Schools	$70,000.00	0.00%

1	17	Elementary Assistant Principals (Miller & Jefferson 2.0)	Yes	Schoolwide	English learner (EL), Low Income	Specific Schools, Miller & Jefferson	$273,446.70	0.00%
1	18	Secondary Sheltered ELD Sections (Social Studies and Science)	Yes	Limited	English learner (EL)	Specific Grade Spans, 6-8	$519,725.70	0.00%
1	19	ELD Instructional Assistants, Secondary (5 FTE)	Yes	Limited	English learner (EL)	Specific Grade Spans, 6-12	$846,673.44	0.00%
1	20	Culturally Responsive Pedagogy PD (K-12 PLCs in ELA & Math)	Yes	LEA-wide	Low Income, English learner (EL)	All Schools	$150,000.00	0.00%
1	21	RTI Assessment Programs (i-Ready Assessment & School City)	Yes	LEA-wide	English learner (EL), Low Income	All Schools	$200,000.00	0.00%
1	22	Outdoor Science School Support Funding	Yes	LEA-wide	English learner (EL), Low Income	Specific Grade Spans, 5	$20,000.00	0.00%
2	1	Monterey Teachers (4.0 FTEs)	Yes	Schoolwide	English learner (EL), Low Income	Specific Schools, Monterey High School (Continuation)	$578,862.24	0.00%
2	2	Family Services Agency of Burbank (FSA) Counseling Program	Yes	LEA-wide	Low Income, English learner (EL)	All Schools	$134,130.00	0.00%
2	3	Secondary Summer School Credit Recovery	Yes	LEA-wide	English learner (EL), Low Income	Specific Grade Spans, 9-12	$102,000.00	0.00%
2	4	Elementary Wellness & Behavior Specialists (3 FTE)	Yes	LEA-wide	English learner (EL), Low Income, Foster Youth	Specific Grade Spans, TK - 5	$335,532.06	0.00%
2	5	Homeless/Foster/At-Risk Youth Specialist	Yes	Limited	Foster Youth	All Schools	$58,579.62	0.00%
2	6	School Climate & Mental Health Surveys (Hanover)	Yes	LEA-wide	English learner (EL), Low Income	All Schools	$50,000.00	0.00%
2	7	Partial SOAR Program Staffing (CDS) (1 teacher; 1 para; 2 specialists)	Yes	LEA-wide	Low Income, Foster Youth, English learner (EL)	Specific Grade Spans, 9-12	$408,230.52	0.00%

3	1	Diversity, Equity, & Inclusion Site Teacher Lead Stipends	Yes	LEA-wide	English learner (EL), Low Income	All Schools	$100,755.60	0.00%
3	2	Diversity, Equity, & Inclusion Site Lead Collaboration Time	Yes	LEA-wide	English learner (EL), Low Income	All Schools	$25,500.00	0.00%

2025-2026 Annual Update Table

Totals:	Last Year's Total Planned Expenditures (Total Funds)	Total Estimated Actual Expenditures (Total Funds)
Totals:	$177,601,494.79	$177,589,797.00

Last Year's Goal#	Last Year's Action#	Prior Action/Service Title	Contributed to Increased or Improved Services?	Last Year's Planned Expenditures (Total Funds)	Estimated Actual Expenditures (Input Total Funds)
1	1	Elementary Class Size Reduction Grades 4 and 5	Yes	$219,098.27	$279,232.00
1	2	Elementary ELD Specialists	Yes	$592,730.05	$604,494.00
1	3	Elementary ELD Instructional Assistants	Yes	$1,086,694.00	$1,014,519.00
1	4	Dual Immersion Teacher Cost Share	Yes	$685,969.05	$659,070.00
1	5	Dual Immersion Instructional Assistants	Yes	$139,540.06	$146,186.00
1	6	Secondary Designated ELD Teachers	Yes	$507,948.52	$483,194.00
1	7	Interpreters for Second Language Learner Parents	Yes	$78,102.00	$72,556.00
1	8	Induction Professional Development Teacher on Special Assignment	Yes	$30,000.00	$28,218.00
1	9	Professional Development Day Costs for All Teachers (1 1/2 days)	Yes	$1,000,000.00	$1,000,000.00
1	10	Elementary Response to Intervention for Reading/Language Arts and Math	Yes	$473,376.00	$596,652.00
1	11	Middle School School	Yes	$357,414.00	$307,824.00

		Psychologist (2.0 FTEs)			
1	12	Behavior Specialists (9.0 FTEs)	Yes	$967,072.99	$964,871.00
1	13	English Learner Program, Supplemental Supports	Yes	$478,795.15	$503,332.00
1	14	Full Time Curriculum Specialists for nine elementary schools	Yes	$1,293,890.00	$1,362,533.00
1	15	Library Coordinators at Elementary Schools	Yes	$411,787.26	$425,107.00
1	16	Targeted support for Twice Exceptional students who qualify as GATE and are included in the unduplicated count	Yes	$70,000.00	$41,197.00
1	17	Elementary Assistant Principals (Miller & Jefferson 2.0)	Yes	$321,239.85	$268,085.00
1	18	Secondary Sheltered ELD Sections (Social Studies and Science)	Yes	$511,346.28	$509,535.00
1	19	ELD Instructional Assistants, Secondary (5 FTE)	Yes	$785,155.67	$830,072.00
1	20	Culturally Responsive Pedagogy PD (K-12 PLCs in ELA & Math)	Yes	$125,000.00	$73,044.00
1	21	RTI Assessment Programs (i-Ready Assessment & School City)	Yes	$146,634.00	$163,624.00
1	22	Outdoor Science School Support Funding	Yes	$20,000.00	$0.00
1	23	GATE Program Annual Identification Assessment Process	No	$20,000.00	$21,335.00
1	24	District GATE Coordinator	No	$25,658.00	$25,658.00
1	25	Music Instrument Repair and Replacement	No	$20,000.00	$20,000.00
1	26	Secondary Art Supplies and Materials	No	$12,600.00	$12,600.00
1	27	Provide support for students with disabilities to achieve their Individual Education Plan (IEP) goals.	No	$39,217,554.00	$39,217,554.00

1	28	Elementary Music Teachers Staffing	No	$537,498.00	$537,498.00
1	29	Provide CTE Pathway offerings to Secondary Students	No	$1,269,998.00	$1,269,998.00
1	30	World Language Courses at Middle Schools	No	$399,101.00	$399,101.00
2	1	Monterey Teachers (4.0 FTEs)	Yes	$539,766.94	$567,512.00
2	2	Family Services Agency of Burbank (FSA) Counseling Program	Yes	$131,500.00	$131,500.00
2	3	Secondary Summer School Credit Recovery	Yes	$100,000.00	$24,000.00
2	4	Elementary Wellness & Behavior Specialists (3 FTE)	Yes	$264,579.75	$328,953.00
2	5	Homeless/Foster/At-Risk Youth Specialist	Yes	$53,093.00	$57,431.00
2	6	School Climate & Mental Health Surveys (Hanover)	Yes	$56,279.00	$48,300.00
2	7	Partial SOAR Program Staffing (CDS) (1 teacher; 1 para; 2 specialists)	Yes	$400,255.95	$345,805.00
3	1	Diversity, Equity, & Inclusion Site Teacher Lead Stipends	Yes	$98,780.00	$98,762.00
3	2	Diversity, Equity, & Inclusion Site Lead Collaboration Time	Yes	$25,000.00	$22,407.00
3	3	Certificated Personnel and Administrative Costs at the District and Site Level	No	$116,732,680.00	$116,732,680.00
4	1	Provide Facility and Maintenance Operations staff, including custodians to provide a clean, safe, and secure learning environment for all students.	No	$7,395,358.00	$7,395,358.00

2025-2026 Contributing Actions Annual Update Table

6.Estimated Actual LCFF Supplemental and/or Concentration Grants (Input Dollar Amount):	4.Total Planned Contributing Expenditures (LCFF Funds)	7.Total Estimated Actual Expenditures for Contributing Actions (LCFF Funds)	Difference Between Planned and Estimated Actual Expenditures for Contributing Actions (Subtract 7 from 4)	5.Total Planned Percentage of Improved Services (%)	8.Total Estimated Actual Percentage of Improved Services(%)	Difference Between Planned and Estimated Actual Percentage of Improved Services (Subtract 5 from 8)
$11,939,870.00	$11,971,047.79	$11,957,715.00	$13,332.79	0.00%	0.00%	0.00% - No Difference

Last Year's Goal#	Last Year's Action#	Prior Action/Service Title	Contributed to Increased or Improved Services?	Last Year's Planned Expenditures for Contributing Actions (LCFF Funds)	Estimated Actual Expenditures for Contributing Actions(Input LCFF Funds)	Planned Percentage of Improved Services	Estimated Actual Percentage of Improved Services(Input Percentage)
1	1	Elementary Class Size Reduction Grades 4 and 5	Yes	$219,098.27	$279,232.00	0.00%	0.00%
1	2	Elementary ELD Specialists	Yes	$592,730.05	$604,494.00	0.00%	0.00%
1	3	Elementary ELD Instructional Assistants	Yes	$1,086,694.00	$1,014,519.00	0.00%	0.00%
1	4	Dual Immersion Teacher Cost Share	Yes	$685,969.05	$659,070.00	0.00%	0.00%
1	5	Dual Immersion Instructional Assistants	Yes	$139,540.06	$146,186.00	0.00%	0.00%
1	6	Secondary Designated ELD Teachers	Yes	$507,948.52	$483,194.00	0.00%	0.00%
1	7	Interpreters for Second Language Learner Parents	Yes	$78,102.00	$72,556.00	0.00%	0.00%
1	8	Induction Professional Development Teacher on Special Assignment	Yes	$30,000.00	$28,218.00	0.00%	0.00%
1	9	Professional Development Day Costs for All Teachers (1 1/2 days)	Yes	$1,000,000.00	$1,000,000.00	0.00%	0.00%
1	10	Elementary Response to Intervention for Reading/Language Arts and Math	Yes	$473,376.00	$596,652.00	0.00%	0.00%

1	11	Middle School School Psychologist (2.0 FTEs)	Yes	$357,414.00	$307,824.00	0.00%	0.00%
1	12	Behavior Specialists (9.0 FTEs)	Yes	$967,072.99	$964,871.00	0.00%	0.00%
1	13	English Learner Program, Supplemental Supports	Yes	$478,795.15	$503,332.00	0.00%	0.00%
1	14	Full Time Curriculum Specialists for nine elementary schools	Yes	$1,293,890.00	$1,362,533.00	0.00%	0.00%
1	15	Library Coordinators at Elementary Schools	Yes	$411,787.26	$425,107.00	0.00%	0.00%
1	16	Targeted support for Twice Exceptional students who qualify as GATE and are included in the unduplicated count	Yes	$70,000.00	$41,197.00	0.00%	0.00%
1	17	Elementary Assistant Principals (Miller & Jefferson 2.0)	Yes	$321,239.85	$268,085.00	0.00%	0.00%
1	18	Secondary Sheltered ELD Sections (Social Studies and Science)	Yes	$511,346.28	$509,535.00	0.00%	0.00%
1	19	ELD Instructional Assistants, Secondary (5 FTE)	Yes	$785,155.67	$830,072.00	0.00%	0.00%
1	20	Culturally Responsive Pedagogy PD (K-12 PLCs in ELA & Math)	Yes	$125,000.00	$73,044.00	0.00%	0.00%
1	21	RTI Assessment Programs (i-Ready Assessment & School City)	Yes	$146,634.00	$163,324.00	0.00%	0.00%
1	22	Outdoor Science School Support Funding	Yes	$20,000.00	$0.00	0.00%	0.00%
2	1	Monterey Teachers (4.0 FTEs)	Yes	$539,766.94	$567,512.00	0.00%	0.00%
2	2	Family Services Agency of Burbank (FSA) Counseling Program	Yes	$131,500.00	$131,500.00	0.00%	0.00%
2	3	Secondary Summer School Credit Recovery	Yes	$100,000.00	$24,000.00	0.00%	0.00%
2	4	Elementary Wellness & Behavior Specialists (3 FTE)	Yes	$264,579.75	$328,953.00	0.00%	0.00%
2	5	Homeless/Foster/At-Risk Youth Specialist	Yes	$53,093.00	$57,431.00	0.00%	0.00%

2	6	School Climate & Mental Health Surveys (Hanover)	Yes	$56,279.00	$48,300.00	0.00%	0.00%
2	7	Partial SOAR Program Staffing (CDS) (1 teacher; 1 para; 2 specialists)	Yes	$400,255.95	$345,805.00	0.00%	0.00%
3	1	Diversity, Equity, & Inclusion Site Teacher Lead Stipends	Yes	$98,780.00	$98,762.00	0.00%	0.00%
3	2	Diversity, Equity, & Inclusion Site Lead Collaboration Time	Yes	$25,000.00	$22,407.00	0.00%	0.00%

2025-2026 LCFF Carryover Table

9.Estimated Actual LCFF Base Grant (Input Dollar Amount)	6. Estimated Actual LCFF Supplemental and/or Concentration Grants	LCFF Carryover – Percentage (Percentage from prior year)	10. Total Percentage to Increase or Improve Services for the Current School Year (6 divided by 9 + Carryover %)	7. Total Estimated Actual Expenditures for Contributing Actions (LCFF Funds)	8.Total Estimated Actual Percentage of Improved Services(%)	11. Estimated Actual Percentage of Increased or Improved Services (7 divided by 9, plus 8)	12. LCFF Carryover – Dollar Amount (Subtract 11 from 10 and multiply by 9)	13. LCFF Carryover – Percentage (12 divided by 9)
$157,195,660.00	$11,939,870.00	0.00%	7.60%	$11,957,715.00	0.00%	7.61%	$0.00 - No Carryover	0.00% - No Carryover

Local Control and Accountability Plan Instructions

Plan Summary

Engaging Educational Partners

Goals and Actions

Increased or Improved Services for Foster Youth, English Learners, and Low-Income Students

For additional questions or technical assistance related to the completion of the Local Control and Accountability Plan (LCAP) template, please contact the local county office of education (COE), or the California Department of Education's (CDE's) Local Agency Systems Support Office, by phone at 916-319-0809 or by email at LCFF@cde.ca.gov.

Introduction and Instructions

The Local Control Funding Formula (LCFF) requires local educational agencies (LEAs) to engage their local educational partners in an annual planning process to evaluate their progress within eight state priority areas encompassing all statutory metrics (COEs have 10 state priorities). LEAs document the results of this planning process in the LCAP using the template adopted by the State Board of Education.

The LCAP development process serves three distinct, but related functions:

- **Comprehensive Strategic Planning:** The process of developing and annually updating the LCAP supports comprehensive strategic planning, particularly to address and reduce disparities in opportunities and outcomes between student groups indicated by the California School Dashboard (California *Education Code* [*EC*] Section 52064[e][1]). Strategic planning that is comprehensive connects budgetary decisions to teaching and learning performance data. LEAs should continually evaluate the hard choices they make about the use of limited resources to meet student and community needs to ensure opportunities and outcomes are improved for all students.

- **Meaningful Engagement of Educational Partners:** The LCAP development process should result in an LCAP that reflects decisions made through meaningful engagement (*EC* Section 52064[e][1]). Local educational partners possess valuable perspectives and insights about an LEA's programs and services. Effective strategic planning will incorporate these perspectives and insights in order to identify potential goals and actions to be included in the LCAP.

- **Accountability and Compliance:** The LCAP serves an important accountability function because the nature of some LCAP template sections require LEAs to show that they have complied with various requirements specified in the LCFF statutes and regulations, most notably:

    - Demonstrating that LEAs are increasing or improving services for foster youth, English learners, including long-term English learners, and low-income students in proportion to the amount of additional funding those students generate under LCFF (*EC* Section 52064[b][4-6]).

- Establishing goals, supported by actions and related expenditures, that address the statutory priority areas and statutory metrics (*EC* sections 52064[b][1] and [2]).
    - **NOTE:** As specified in *EC* Section 62064(b)(1), the LCAP must provide a description of the annual goals, for all pupils and each subgroup of pupils identified pursuant to *EC* Section 52052, to be achieved for each of the state priorities. Beginning in 2023–24, *EC* Section 52052 identifies long-term English learners as a separate and distinct pupil subgroup with a numerical significance at 15 students.
- Annually reviewing and updating the LCAP to reflect progress toward the goals (*EC* Section 52064[b][7]).
- Ensuring that all increases attributable to supplemental and concentration grant calculations, including concentration grant add-on funding and/or LCFF carryover, are reflected in the LCAP (*EC* sections 52064[b][6], [8], and [11]).

The LCAP template, like each LEA's final adopted LCAP, is a document, not a process. LEAs must use the template to memorialize the outcome of their LCAP development process, which must: (a) reflect comprehensive strategic planning, particularly to address and reduce disparities in opportunities and outcomes between student groups indicated by the California School Dashboard (Dashboard), (b) through meaningful engagement with educational partners that (c) meets legal requirements, as reflected in the final adopted LCAP. The sections included within the LCAP template do not and cannot reflect the full development process, just as the LCAP template itself is not intended as a tool for engaging educational partners.

If a county superintendent of schools has jurisdiction over a single school district, the county board of education and the governing board of the school district may adopt and file for review and approval a single LCAP consistent with the requirements in *EC* sections 52060, 52062, 52066, 52068, and 52070. The LCAP must clearly articulate to which entity's budget (school district or county superintendent of schools) all budgeted and actual expenditures are aligned.

The revised LCAP template for the 2024–25, 2025–26, and 2026–27 school years reflects statutory changes made through Senate Bill 114 (Committee on Budget and Fiscal Review), Chapter 48, Statutes of 2023 and Senate Bill 153, Chapter 38, Statues of 2024.

At its most basic, the adopted LCAP should attempt to distill not just what the LEA is doing for students in transitional kindergarten through grade twelve (TK–12), but also allow educational partners to understand why, and whether those strategies are leading to improved opportunities and outcomes for students. LEAs are strongly encouraged to use language and a level of detail in their adopted LCAPs intended to be meaningful and accessible for the LEA's diverse educational partners and the broader public.

In developing and finalizing the LCAP for adoption, LEAs are encouraged to keep the following overarching frame at the forefront of the strategic planning and educational partner engagement functions:

> Given present performance across the state priorities and on indicators in the Dashboard, how is the LEA using its budgetary resources to respond to TK–12 student and community needs, and address any performance gaps, including by meeting its obligation to increase or improve services for foster youth, English learners, and low-income students?

LEAs are encouraged to focus on a set of metrics and actions which, based on research, experience, and input gathered from educational partners, the LEA believes will have the biggest impact on behalf of its TK–12 students.

These instructions address the requirements for each section of the LCAP but may include information about effective practices when developing the LCAP and completing the LCAP document. Additionally, the beginning of each template section includes information emphasizing the purpose that section serves.

Plan Summary

Purpose

A well-developed Plan Summary section provides a meaningful context for the LCAP. This section provides information about an LEA's community as well as relevant information about student needs and performance. In order to present a meaningful context for the rest of the LCAP, the content of this section should be clearly and meaningfully related to the content included throughout each subsequent section of the LCAP.

Requirements and Instructions

General Information

A description of the LEA, its schools, and its students in grades transitional kindergarten–12, as applicable to the LEA. LEAs may also provide information about their strategic plan, vision, etc.

Briefly describe the LEA, its schools, and its students in grades TK–12, as applicable to the LEA.

- For example, information about an LEA in terms of geography, enrollment, employment, the number and size of specific schools, recent community challenges, and other such information the LEA may wish to include can enable a reader to more fully understand the LEA's LCAP.
- LEAs may also provide information about their strategic plan, vision, etc.
- As part of this response, identify all schools within the LEA receiving Equity Multiplier funding.

Reflections: Annual Performance

A reflection on annual performance based on a review of the California School Dashboard (Dashboard) and local data.

Reflect on the LEA's annual performance on the Dashboard and local data. This may include both successes and challenges identified by the LEA during the development process.

LEAs are encouraged to highlight how they are addressing the identified needs of student groups, and/or schools within the LCAP as part of this response.

As part of this response, the LEA must identify the following, which will remain unchanged during the three-year LCAP cycle:

- Any school within the LEA that received the lowest performance level on one or more state indicators on the 2023 Dashboard;

- Any student group within the LEA that received the lowest performance level on one or more state indicators on the 2023 Dashboard; and/or

- Any student group within a school within the LEA that received the lowest performance level on one or more state indicators on the 2023 Dashboard.

EC Section 52064.4 requires that an LEA that has unexpended Learning Recovery Emergency Block Grant (LREBG) funds must include one or more actions funded with LREBG funds within the 2025-26, 2026-27 and 2027-28 LCAPs, as applicable to the LEA. To implement the requirements of *EC* Section 52064.4, all LEAs must do the following:

- For the 2025–26, 2026–27, and 2027–28 LCAP years, identify whether or not the LEA has unexpended LREBG funds for the applicable LCAP year.
    - If the LEA has unexpended LREBG funds the LEA must provide the following:
        - The goal and action number for each action that will be funded, either in whole or in part, with LREBG funds; and
        - An explanation of the rationale for selecting each action funded with LREBG funds. This explanation must include:
            - An explanation of how the action is aligned with the allowable uses of funds identified in *EC* Section 32526(c)(2); and
            - An explanation of how the action is expected to address the area(s) of need of students and schools identified in the needs assessment required by *EC* Section 32526(d).
                - For information related to the allowable uses of funds and the required needs assessment, please see the Program Information tab on the LREBG Program Information web page.
            - Actions may be grouped together for purposes of these explanations.
            - The LEA may provide these explanations as part of the action description rather than as part of the Reflections: Annual Performance.
    - If the LEA does not have unexpended LREBG funds, the LEA is not required to conduct the needs assessment required by *EC* Section 32526(d), to provide the information identified above or to include actions funded with LREBG funds within the 2025-26, 2026-27 and 2027-28 LCAPs.

Reflections: Technical Assistance

As applicable, a summary of the work underway as part of technical assistance.

Annually identify the reason(s) the LEA is eligible for or has requested technical assistance consistent with *EC* sections 47607.3, 52071, 52071.5, 52072, or 52072.5, and provide a summary of the work underway as part of receiving technical assistance. The most common form of this technical assistance is frequently referred to as Differentiated Assistance, however this also includes LEAs that have requested technical assistance from their COE.

- If the LEA is not eligible for or receiving technical assistance, the LEA may respond to this prompt as "Not Applicable."

Comprehensive Support and Improvement

An LEA with a school or schools identified for comprehensive support and improvement (CSI) under the Every Student Succeeds Act must respond to the following prompts:

Schools Identified

A list of the schools in the LEA that are eligible for comprehensive support and improvement.

- Identify the schools within the LEA that have been identified for CSI.

Support for Identified Schools

A description of how the LEA has or will support its eligible schools in developing comprehensive support and improvement plans.

- Describe how the LEA has or will support the identified schools in developing CSI plans that included a school-level needs assessment, evidence-based interventions, and the identification of any resource inequities to be addressed through the implementation of the CSI plan.

Monitoring and Evaluating Effectiveness

A description of how the LEA will monitor and evaluate the plan to support student and school improvement.

- Describe how the LEA will monitor and evaluate the implementation and effectiveness of the CSI plan to support student and school improvement.

Engaging Educational Partners

Purpose

Significant and purposeful engagement of parents, students, educators, and other educational partners, including those representing the student groups identified by LCFF, is critical to the development of the LCAP and the budget process. Consistent with statute, such engagement should support comprehensive strategic planning, particularly to address and reduce disparities in opportunities and outcomes between student groups indicated by the Dashboard, accountability, and improvement across the state priorities and locally identified priorities (*EC* Section 52064[e][1]). Engagement of educational partners is an ongoing, annual process.

This section is designed to reflect how the engagement of educational partners influenced the decisions reflected in the adopted LCAP. The goal is to allow educational partners that participated in the LCAP development process and the broader public to understand how the LEA

engaged educational partners and the impact of that engagement. LEAs are encouraged to keep this goal in the forefront when completing this section.

Requirements

School districts and COEs: *EC* Section 52060(g) and *EC* Section 52066(g) specify the educational partners that must be consulted when developing the LCAP:

- Teachers,
- Principals,
- Administrators,
- Other school personnel,
- Local bargaining units of the LEA,
- Parents, and
- Students

A school district or COE receiving Equity Multiplier funds must also consult with educational partners at schools generating Equity Multiplier funds in the development of the LCAP, specifically, in the development of the required focus goal for each applicable school.

Before adopting the LCAP, school districts and COEs must share it with the applicable committees, as identified below under Requirements and Instructions. The superintendent is required by statute to respond in writing to the comments received from these committees. School districts and COEs must also consult with the special education local plan area administrator(s) when developing the LCAP.

Charter schools: *EC* Section 47606.5(d) requires that the following educational partners be consulted with when developing the LCAP:

- Teachers,
- Principals,
- Administrators,
- Other school personnel,
- Parents, and
- Students

A charter school receiving Equity Multiplier funds must also consult with educational partners at the school generating Equity Multiplier funds in the development of the LCAP, specifically, in the development of the required focus goal for the school.

The LCAP should also be shared with, and LEAs should request input from, schoolsite-level advisory groups, as applicable (e.g., schoolsite councils, English Learner Advisory Councils, student advisory groups, etc.), to facilitate alignment between schoolsite and district-level goals. Information and resources that support effective engagement, define student consultation, and provide the requirements for advisory group composition, can be found under Resources on the CDE's LCAP webpage.

Before the governing board/body of an LEA considers the adoption of the LCAP, the LEA must meet the following legal requirements:

- For school districts, see *Education Code* Section 52062;
    - **Note:** Charter schools using the LCAP as the School Plan for Student Achievement must meet the requirements of *EC* Section 52062(a).
- For COEs, see *Education Code* Section 52068; and
- For charter schools, see *Education Code* Section 47606.5.
- **NOTE:** As a reminder, the superintendent of a school district or COE must respond, in writing, to comments received by the applicable committees identified in the *Education Code* sections listed above. This includes the parent advisory committee and may include the English learner parent advisory committee and, as of July 1, 2024, the student advisory committee, as applicable.

Instructions

Respond to the prompts as follows:

A summary of the process used to engage educational partners in the development of the LCAP.

School districts and county offices of education must, at a minimum, consult with teachers, principals, administrators, other school personnel, local bargaining units, parents, and students in the development of the LCAP.

Charter schools must, at a minimum, consult with teachers, principals, administrators, other school personnel, parents, and students in the development of the LCAP.

An LEA receiving Equity Multiplier funds must also consult with educational partners at schools generating Equity Multiplier funds in the development of the LCAP, specifically, in the development of the required focus goal for each applicable school.

Complete the table as follows:

Educational Partners

Identify the applicable educational partner(s) or group(s) that were engaged in the development of the LCAP.

Process for Engagement

Describe the engagement process used by the LEA to involve the identified educational partner(s) in the development of the LCAP. At a minimum, the LEA must describe how it met its obligation to consult with all statutorily required educational partners, as applicable to the type of LEA.

- A sufficient response to this prompt must include general information about the timeline of the process and meetings or other engagement strategies with educational partners. A response may also include information about an LEA's philosophical approach to engaging its educational partners.

- An LEA receiving Equity Multiplier funds must also include a summary of how it consulted with educational partners at schools generating Equity Multiplier funds in the development of the LCAP, specifically, in the development of the required focus goal for each applicable school.

A description of how the adopted LCAP was influenced by the feedback provided by educational partners.

Describe any goals, metrics, actions, or budgeted expenditures in the LCAP that were influenced by or developed in response to the educational partner feedback.

- A sufficient response to this prompt will provide educational partners and the public with clear, specific information about how the engagement process influenced the development of the LCAP. This may include a description of how the LEA prioritized requests of educational partners within the context of the budgetary resources available or otherwise prioritized areas of focus within the LCAP.

- An LEA receiving Equity Multiplier funds must include a description of how the consultation with educational partners at schools generating Equity Multiplier funds influenced the development of the adopted LCAP.

- For the purposes of this prompt, this may also include, but is not necessarily limited to:

    - Inclusion of a goal or decision to pursue a Focus Goal (as described below)
    - Inclusion of metrics other than the statutorily required metrics
    - Determination of the target outcome on one or more metrics
    - Inclusion of performance by one or more student groups in the Measuring and Reporting Results subsection
    - Inclusion of action(s) or a group of actions
    - Elimination of action(s) or group of actions
    - Changes to the level of proposed expenditures for one or more actions
    - Inclusion of action(s) as contributing to increased or improved services for unduplicated students
    - Analysis of effectiveness of the specific actions to achieve the goal
    - Analysis of material differences in expenditures
    - Analysis of changes made to a goal for the ensuing LCAP year based on the annual update process
    - Analysis of challenges or successes in the implementation of actions

Goals and Actions

Purpose

Well-developed goals will clearly communicate to educational partners what the LEA plans to accomplish, what the LEA plans to do in order to accomplish the goal, and how the LEA will know when it has accomplished the goal. A goal statement, associated metrics and expected outcomes, and the actions included in the goal must be in alignment. The explanation for why the LEA included a goal is an opportunity for LEAs to clearly communicate to educational partners and the public why, among the various strengths and areas for improvement highlighted by performance data and strategies and actions that could be pursued, the LEA decided to pursue this goal, and the related metrics, expected outcomes, actions, and expenditures.

A well-developed goal can be focused on the performance relative to a metric or metrics for all students, a specific student group(s), narrowing performance gaps, or implementing programs or strategies expected to impact outcomes. LEAs should assess the performance of their student groups when developing goals and the related actions to achieve such goals.

Requirements and Instructions

LEAs should prioritize the goals, specific actions, and related expenditures included within the LCAP within one or more state priorities. LEAs must consider performance on the state and local indicators, including their locally collected and reported data for the local indicators that are included in the Dashboard, in determining whether and how to prioritize its goals within the LCAP. As previously stated, strategic planning that is comprehensive connects budgetary decisions to teaching and learning performance data. LEAs should continually evaluate the hard choices they make about the use of limited resources to meet student and community needs to ensure opportunities and outcomes are improved for all students, and to address and reduce disparities in opportunities and outcomes between student groups indicated by the Dashboard.

In order to support prioritization of goals, the LCAP template provides LEAs with the option of developing three different kinds of goals:

- Focus Goal: A Focus Goal is relatively more concentrated in scope and may focus on a fewer number of metrics to measure improvement. A Focus Goal statement will be time bound and make clear how the goal is to be measured.
    - All Equity Multiplier goals must be developed as focus goals. For additional information, see Required Focus Goal(s) for LEAs Receiving Equity Multiplier Funding below.
- Broad Goal: A Broad Goal is relatively less concentrated in its scope and may focus on improving performance across a wide range of metrics.
- Maintenance of Progress Goal: A Maintenance of Progress Goal includes actions that may be ongoing without significant changes and allows an LEA to track performance on any metrics not addressed in the other goals of the LCAP.

Requirement to Address the LCFF State Priorities

At a minimum, the LCAP must address all LCFF priorities and associated metrics articulated in *EC* sections 52060(d) and 52066(d), as applicable to the LEA. The *LCFF State Priorities Summary* provides a summary of *EC* sections 52060(d) and 52066(d) to aid in the development of the LCAP.

Respond to the following prompts, as applicable:

Focus Goal(s)

Description

The description provided for a Focus Goal must be specific, measurable, and time bound.

- An LEA develops a Focus Goal to address areas of need that may require or benefit from a more specific and data intensive approach.

- The Focus Goal can explicitly reference the metric(s) by which achievement of the goal will be measured and the time frame according to which the LEA expects to achieve the goal.

Type of Goal

Identify the type of goal being implemented as a Focus Goal.

State Priorities addressed by this goal.

Identify each of the state priorities that this goal is intended to address.

An explanation of why the LEA has developed this goal.

Explain why the LEA has chosen to prioritize this goal.

- An explanation must be based on Dashboard data or other locally collected data.
- LEAs must describe how the LEA identified this goal for focused attention, including relevant consultation with educational partners.
- LEAs are encouraged to promote transparency and understanding around the decision to pursue a focus goal.

Required Focus Goal(s) for LEAs Receiving Equity Multiplier Funding

Description

LEAs receiving Equity Multiplier funding must include one or more focus goals for each school generating Equity Multiplier funding. In addition to addressing the focus goal requirements described above, LEAs must adhere to the following requirements.

Focus goals for Equity Multiplier schoolsites must address the following:

(A) All student groups that have the lowest performance level on one or more state indicators on the Dashboard, and

(B) Any underlying issues in the credentialing, subject matter preparation, and retention of the school's educators, if applicable.

- Focus Goals for each and every Equity Multiplier schoolsite must identify specific metrics for each identified student group, as applicable.
- An LEA may create a single goal for multiple Equity Multiplier schoolsites if those schoolsites have the same student group(s) performing at the lowest performance level on one or more state indicators on the Dashboard or, experience similar issues in the credentialing, subject matter preparation, and retention of the school's educators.
    - When creating a single goal for multiple Equity Multiplier schoolsites, the goal must identify the student groups and the performance levels on the Dashboard that the Focus Goal is addressing; or,

- The common issues the schoolsites are experiencing in credentialing, subject matter preparation, and retention of the school's educators, if applicable.

Type of Goal

Identify the type of goal being implemented as an Equity Multiplier Focus Goal.

State Priorities addressed by this goal.

Identify each of the state priorities that this goal is intended to address.

An explanation of why the LEA has developed this goal.

Explain why the LEA has chosen to prioritize this goal.

- An explanation must be based on Dashboard data or other locally collected data.
- LEAs must describe how the LEA identified this goal for focused attention, including relevant consultation with educational partners.
- LEAs are encouraged to promote transparency and understanding around the decision to pursue a focus goal.
- In addition to this information, the LEA must also identify:
  - The school or schools to which the goal applies

LEAs are encouraged to approach an Equity Multiplier goal from a wholistic standpoint, considering how the goal might maximize student outcomes through the use of LCFF and other funding in addition to Equity Multiplier funds.

- Equity Multiplier funds must be used to supplement, not supplant, funding provided to Equity Multiplier schoolsites for purposes of the LCFF, the Expanded Learning Opportunities Program (ELO-P), the Literacy Coaches and Reading Specialists (LCRS) Grant Program, and/or the California Community Schools Partnership Program (CCSPP).
- This means that Equity Multiplier funds must not be used to replace funding that an Equity Multiplier schoolsite would otherwise receive to implement LEA-wide actions identified in the LCAP or that an Equity Multiplier schoolsite would otherwise receive to implement provisions of the ELO-P, the LCRS, and/or the CCSPP.

Note: *EC* Section 42238.024(b)(1) requires that Equity Multiplier funds be used for the provision of evidence-based services and supports for students. Evidence-based services and supports are based on objective evidence that has informed the design of the service or support and/or guides the modification of those services and supports. Evidence-based supports and strategies are most commonly based on educational research and/or metrics of LEA, school, and/or student performance.

Broad Goal

Description

Describe what the LEA plans to achieve through the actions included in the goal.

- The description of a broad goal will be clearly aligned with the expected measurable outcomes included for the goal.
- The goal description organizes the actions and expected outcomes in a cohesive and consistent manner.
- A goal description is specific enough to be measurable in either quantitative or qualitative terms. A broad goal is not as specific as a focus goal. While it is specific enough to be measurable, there are many different metrics for measuring progress toward the goal.

Type of Goal

Identify the type of goal being implemented as a Broad Goal.

State Priorities addressed by this goal.

Identify each of the state priorities that this goal is intended to address.

An explanation of why the LEA has developed this goal.

Explain why the LEA developed this goal and how the actions and metrics grouped together will help achieve the goal.

Maintenance of Progress Goal

Description

Describe how the LEA intends to maintain the progress made in the LCFF State Priorities not addressed by the other goals in the LCAP.

- Use this type of goal to address the state priorities and applicable metrics not addressed within the other goals in the LCAP.
- The state priorities and metrics to be addressed in this section are those for which the LEA, in consultation with educational partners, has determined to maintain actions and monitor progress while focusing implementation efforts on the actions covered by other goals in the LCAP.

Type of Goal

Identify the type of goal being implemented as a Maintenance of Progress Goal.

State Priorities addressed by this goal.

Identify each of the state priorities that this goal is intended to address.

An explanation of why the LEA has developed this goal.

Explain how the actions will sustain the progress exemplified by the related metrics.

Measuring and Reporting Results:

For each LCAP year, identify the metric(s) that the LEA will use to track progress toward the expected outcomes.

- LEAs must identify metrics for specific student groups, as appropriate, including expected outcomes that address and reduce disparities in outcomes between student groups.

- The metrics may be quantitative or qualitative; but at minimum, an LEA's LCAP must include goals that are measured using all of the applicable metrics for the related state priorities, in each LCAP year, as applicable to the type of LEA.

- To the extent a state priority does not specify one or more metrics (e.g., implementation of state academic content and performance standards), the LEA must identify a metric to use within the LCAP. For these state priorities, LEAs are encouraged to use metrics based on or reported through the relevant local indicator self-reflection tools within the Dashboard.

- **Required metrics for LEA-wide actions:** For each action identified as 1) contributing towards the requirement to increase or improve services for foster youth, English learners, including long-term English learners, and low-income students and 2) being provided on an LEA-wide basis, the LEA must identify one or more metrics to monitor the effectiveness of the action and its budgeted expenditures.

    - These required metrics may be identified within the action description or the first prompt in the increased or improved services section, however the description must clearly identify the metric(s) being used to monitor the effectiveness of the action and the action(s) that the metric(s) apply to.

- **Required metrics for Equity Multiplier goals**: For each Equity Multiplier goal, the LEA must identify:

    - The specific metrics for each identified student group at each specific schoolsite, as applicable, to measure the progress toward the goal, and/or

    - The specific metrics used to measure progress in meeting the goal related to credentialing, subject matter preparation, or educator retention at each specific schoolsite.

- **Required metrics for actions supported by LREBG funds**: To implement the requirements of *EC* Section 52064.4, LEAs with unexpended LREBG funds must include at least one metric to monitor the impact of each action funded with LREBG funds included in the goal.

    - The metrics being used to monitor the impact of each action funded with LREBG funds are not required to be new metrics; they may be metrics that are already being used to measure progress towards goals and actions included in the LCAP.

Complete the table as follows:

Metric

- Enter the metric number.

Metric

- Identify the standard of measure being used to determine progress towards the goal and/or to measure the effectiveness of one or more actions associated with the goal.

Baseline

- Enter the baseline when completing the LCAP for 2024–25.
    - Use the most recent data associated with the metric available at the time of adoption of the LCAP for the first year of the three-year plan. LEAs may use data as reported on the 2023 Dashboard for the baseline of a metric only if that data represents the most recent available data (e.g., high school graduation rate).
    - Using the most recent data available may involve reviewing data the LEA is preparing for submission to the California Longitudinal Pupil Achievement Data System (CALPADS) or data that the LEA has recently submitted to CALPADS.
    - Indicate the school year to which the baseline data applies.
    - The baseline data must remain unchanged throughout the three-year LCAP.
        - This requirement is not intended to prevent LEAs from revising the baseline data if it is necessary to do so. For example, if an LEA identifies that its data collection practices for a particular metric are leading to inaccurate data and revises its practice to obtain accurate data, it would also be appropriate for the LEA to revise the baseline data to align with the more accurate data process and report its results using the accurate data.
        - If an LEA chooses to revise its baseline data, then, at a minimum, it must clearly identify the change as part of its response to the description of changes prompt in the Goal Analysis for the goal. LEAs are also strongly encouraged to involve their educational partners in the decision of whether or not to revise a baseline and to communicate the proposed change to their educational partners.
    - Note for Charter Schools: Charter schools developing a one- or two-year LCAP may identify a new baseline each year, as applicable.

Year 1 Outcome

- When completing the LCAP for 2025–26, enter the most recent data available. Indicate the school year to which the data applies.

- Note for Charter Schools: Charter schools developing a one-year LCAP may provide the Year 1 Outcome when completing the LCAP for both 2025–26 and 2026–27 or may provide the Year 1 Outcome for 2025–26 and provide the Year 2 Outcome for 2026–27.

Year 2 Outcome

- When completing the LCAP for 2026–27, enter the most recent data available. Indicate the school year to which the data applies.
    - Note for Charter Schools: Charter schools developing a one-year LCAP may identify the Year 2 Outcome as not applicable when completing the LCAP for 2026–27 or may provide the Year 2 Outcome for 2026–27.

Target for Year 3 Outcome

- When completing the first year of the LCAP, enter the target outcome for the relevant metric the LEA expects to achieve by the end of the three-year LCAP cycle.
    - Note for Charter Schools: Charter schools developing a one- or two-year LCAP may identify a Target for Year 1 or Target for Year 2, as applicable.

Current Difference from Baseline

- When completing the LCAP for 2025–26 and 2026–27, enter the current difference between the baseline and the yearly outcome, as applicable.
    - Note for Charter Schools: Charter schools developing a one- or two-year LCAP will identify the current difference between the baseline and the yearly outcome for Year 1 and/or the current difference between the baseline and the yearly outcome for Year 2, as applicable.

Timeline for school districts and COEs for completing the "**Measuring and Reporting Results**" part of the Goal.

Metric	Baseline	Year 1 Outcome	Year 2 Outcome	Target for Year 3 Outcome	Current Difference from Baseline
Enter information in this box when completing the LCAP for **2024–25** or when adding a new metric.	Enter information in this box when completing the LCAP for **2024–25** or when adding a new metric.	Enter information in this box when completing the LCAP for **2025–26**. Leave blank until then.	Enter information in this box when completing the LCAP for **2026–27**. Leave blank until then.	Enter information in this box when completing the LCAP for **2024–25** or when adding a new metric.	Enter information in this box when completing the LCAP for **2025–26** and **2026–27**. Leave blank until then.

Goal Analysis:

Enter the LCAP Year.

Using actual annual measurable outcome data, including data from the Dashboard, analyze whether the planned actions were effective towards achieving the goal. "Effective" means the degree to which the planned actions were successful in producing the target result. Respond to the prompts as instructed.

Note: When completing the 2024–25 LCAP, use the 2023–24 Local Control and Accountability Plan Annual Update template to complete the Goal Analysis and identify the Goal Analysis prompts in the 2024–25 LCAP as "Not Applicable."

A description of overall implementation, including any substantive differences in planned actions and actual implementation of these actions, and any relevant challenges and successes experienced with implementation.

- Describe the overall implementation of the actions to achieve the articulated goal, including relevant challenges and successes experienced with implementation.
    - Include a discussion of relevant challenges and successes experienced with the implementation process.
    - This discussion must include any instance where the LEA did not implement a planned action or implemented a planned action in a manner that differs substantively from how it was described in the adopted LCAP.

An explanation of material differences between Budgeted Expenditures and Estimated Actual Expenditures and/or Planned Percentages of Improved Services and Estimated Actual Percentages of Improved Services.

- Explain material differences between Budgeted Expenditures and Estimated Actual Expenditures and between the Planned Percentages of Improved Services and Estimated Actual Percentages of Improved Services, as applicable. Minor variances in expenditures or percentages do not need to be addressed, and a dollar-for-dollar accounting is not required.

A description of the effectiveness or ineffectiveness of the specific actions to date in making progress toward the goal.

- Describe the effectiveness or ineffectiveness of the specific actions to date in making progress toward the goal. "Effectiveness" means the degree to which the actions were successful in producing the target result and "ineffectiveness" means that the actions did not produce any significant or targeted result.
    - In some cases, not all actions in a goal will be intended to improve performance on all of the metrics associated with the goal.
    - When responding to this prompt, LEAs may assess the effectiveness of a single action or group of actions within the goal in the context of performance on a single metric or group of specific metrics within the goal that are applicable to the action(s). Grouping actions with metrics will allow for more robust analysis of whether the strategy the LEA is using to impact a specified set of metrics is working and increase transparency for educational partners. LEAs are encouraged to use such an approach when goals include multiple actions and metrics that are not closely associated.
    - Beginning with the development of the 2024–25 LCAP, the LEA must change actions that have not proven effective over a three-year period.

A description of any changes made to the planned goal, metrics, target outcomes, or actions for the coming year that resulted from reflections on prior practice.

- Describe any changes made to this goal, expected outcomes, metrics, or actions to achieve this goal as a result of this analysis and analysis of the data provided in the Dashboard or other local data, as applicable.
    - As noted above, beginning with the development of the 2024–25 LCAP, the LEA must change actions that have not proven effective over a three-year period. For actions that have been identified as ineffective, the LEA must identify the ineffective action and must include a description of the following:
        - The reasons for the ineffectiveness, and
        - How changes to the action will result in a new or strengthened approach.

Actions:

Complete the table as follows. Add additional rows as necessary.

Action #

- Enter the action number.

Title

- Provide a short title for the action. This title will also appear in the action tables.

Description

- Provide a brief description of the action.
    - For actions that contribute to meeting the increased or improved services requirement, the LEA may include an explanation of how each action is principally directed towards and effective in meeting the LEA's goals for unduplicated students, as described in the instructions for the Increased or Improved Services for Foster Youth, English Learners, and Low-Income Students section.
    - As previously noted, for each action identified as 1) contributing towards the requirement to increase or improve services for foster youth, English learners, including long-term English learners, and low-income students and 2) being provided on an LEA-wide basis, the LEA must identify one or more metrics to monitor the effectiveness of the action and its budgeted expenditures.
    - These required metrics may be identified within the action description or the first prompt in the increased or improved services section; however, the description must clearly identify the metric(s) being used to monitor the effectiveness of the action and the action(s) that the metric(s) apply to.

Total Funds

- Enter the total amount of expenditures associated with this action. Budgeted expenditures from specific fund sources will be provided in the action tables.

Contributing

- Indicate whether the action contributes to meeting the increased or improved services requirement as described in the Increased or Improved Services section using a "Y" for Yes or an "N" for No.
    - **Note:** for each such contributing action, the LEA will need to provide additional information in the Increased or Improved Services section to address the requirements in *California Code of Regulations*, Title 5 [5 *CCR*] Section 15496 in the Increased or Improved Services section of the LCAP.

***Actions for Foster Youth*:** School districts, COEs, and charter schools that have a numerically significant foster youth student subgroup are encouraged to include specific actions in the LCAP designed to meet needs specific to foster youth students.

Required Actions

For English Learners and Long-Term English Learners

- LEAs with 30 or more English learners and/or 15 or more long-term English learners must include specific actions in the LCAP related to, at a minimum:
    - Language acquisition programs, as defined in *EC* Section 306, provided to students, and
    - Professional development for teachers.
    - If an LEA has both 30 or more English learners and 15 or more long-term English learners, the LEA must include actions for both English learners and long-term English learners.

For Technical Assistance

- LEAs eligible for technical assistance pursuant to *EC* sections 47607.3, 52071, 52071.5, 52072, or 52072.5, must include specific actions within the LCAP related to its implementation of the work underway as part of technical assistance. The most common form of this technical assistance is frequently referred to as Differentiated Assistance.

For Lowest Performing Dashboard Indicators

- LEAs that have Red Dashboard indicators for (1) a school within the LEA, (2) a student group within the LEA, and/or (3) a student group within any school within the LEA must include one or more specific actions within the LCAP:
    - The specific action(s) must be directed towards the identified student group(s) and/or school(s) and must address the identified state indicator(s) for which the student group or school received the lowest performance level on the 2023 Dashboard. Each

student group and/or school that receives the lowest performance level on the 2023 Dashboard must be addressed by one or more actions.

  - These required actions will be effective for the three-year LCAP cycle.

For LEAs With Unexpended LREBG Funds

- To implement the requirements of *EC* Section 52064.4, LEAs with unexpended LREBG funds must include one or more actions supported with LREBG funds within the 2025–26, 2026–27, and 2027–28 LCAPs, as applicable to the LEA. Actions funded with LREBG funds must remain in the LCAP until the LEA has expended the remainder of its LREBG funds, after which time the actions may be removed from the LCAP.

  - Prior to identifying the actions included in the LCAP the LEA is required to conduct a needs assessment pursuant to *EC* Section 32526(d). For information related to the required needs assessment please see the Program Information tab on the LREBG Program Information web page. Additional information about the needs assessment and evidence-based resources for the LREBG may be found on the California Statewide System of Support LREBG Resources web page. The required LREBG needs assessment may be part of the LEAs regular needs assessment for the LCAP if it meets the requirements of *EC* Section 32526(d).

  - School districts receiving technical assistance and COEs providing technical assistance are encouraged to use the technical assistance process to support the school district in conducting the required needs assessment, the selection of actions funded by the LREBG and/or the evaluation of implementation of the actions required as part of the LCAP annual update process.

  - As a reminder, LREBG funds must be used to implement one or more of the purposes articulated in *EC* Section 32526(c)(2).

  - LEAs with unexpended LREBG funds must include one or more actions supported by LREBG funds within the LCAP. For each action supported by LREBG funding the action description must:

    - Identify the action as an LREBG action;

    - Include an explanation of how research supports the selected action;

    - Identify the metric(s) being used to monitor the impact of the action; and

    - Identify the amount of LREBG funds being used to support the action.

Increased or Improved Services for Foster Youth, English Learners, and Low-Income Students

Purpose

A well-written Increased or Improved Services section provides educational partners with a comprehensive description, within a single dedicated section, of how an LEA plans to increase or improve services for its unduplicated students as defined in *EC* Section 42238.02 in grades TK–12 as compared to all students in grades TK–12, as applicable, and how LEA-wide or schoolwide actions identified for this purpose meet regulatory requirements. Descriptions provided should include sufficient detail yet be sufficiently succinct to promote a broader understanding of educational partners to facilitate their ability to provide input. An LEA's description in this section must align with the actions included in the Goals and Actions section as contributing.

Please Note: For the purpose of meeting the Increased or Improved Services requirement and consistent with *EC* Section 42238.02, long-term English learners are included in the English learner student group.

Statutory Requirements

An LEA is required to demonstrate in its LCAP how it is increasing or improving services for its students who are foster youth, English learners, and/or low-income, collectively referred to as unduplicated students, as compared to the services provided to all students in proportion to the increase in funding it receives based on the number and concentration of unduplicated students in the LEA (*EC* Section 42238.07[a][1], *EC* Section 52064[b][8][B]; 5 *CCR* Section 15496[a]). This proportionality percentage is also known as the "minimum proportionality percentage" or "MPP." The manner in which an LEA demonstrates it is meeting its MPP is two-fold: (1) through the expenditure of LCFF funds or through the identification of a Planned Percentage of Improved Services as documented in the Contributing Actions Table, and (2) through the explanations provided in the Increased or Improved Services for Foster Youth, English Learners, and Low-Income Students section.

To improve services means to grow services in quality and to increase services means to grow services in quantity. Services are increased or improved by those actions in the LCAP that are identified in the Goals and Actions section as contributing to the increased or improved services requirement, whether they are provided across the entire LEA (LEA-wide action), provided to an entire school (Schoolwide action), or solely provided to one or more unduplicated student group(s) (Limited action).

Therefore, for *any* action contributing to meet the increased or improved services requirement, the LEA must include an explanation of:

- How the action is increasing or improving services for the unduplicated student group(s) (Identified Needs and Action Design), and
- How the action meets the LEA's goals for its unduplicated pupils in the state and any local priority areas (Measurement of Effectiveness).

LEA-wide and Schoolwide Actions

In addition to the above required explanations, LEAs must provide a justification for why an LEA-wide or Schoolwide action is being provided to all students and how the action is intended to improve outcomes for unduplicated student group(s) as compared to all students.

- Conclusory statements that a service will help achieve an expected outcome for the goal, without an explicit connection or further explanation as to how, are not sufficient.

- Further, simply stating that an LEA has a high enrollment percentage of a specific student group or groups does not meet the increased or improved services standard because enrolling students is not the same as serving students.

For School Districts Only

Actions provided on an **LEA-wide** basis at **school districts with an unduplicated pupil percentage of less than 55 percent** must also include a description of how the actions are the most effective use of the funds to meet the district's goals for its unduplicated pupils in the state and any local priority areas. The description must provide the basis for this determination, including any alternatives considered, supporting research, experience, or educational theory.

Actions provided on a **Schoolwide** basis for **schools with less than 40 percent enrollment of unduplicated pupils** must also include a description of how these actions are the most effective use of the funds to meet the district's goals for its unduplicated pupils in the state and any local priority areas. The description must provide the basis for this determination, including any alternatives considered, supporting research, experience, or educational theory.

Requirements and Instructions

Complete the tables as follows:

Total Projected LCFF Supplemental and/or Concentration Grants

- Specify the amount of LCFF supplemental and concentration grant funds the LEA estimates it will receive in the coming year based on the number and concentration of foster youth, English learner, and low-income students. This amount includes the Additional 15 percent LCFF Concentration Grant.

Projected Additional 15 percent LCFF Concentration Grant

- Specify the amount of additional LCFF concentration grant add-on funding, as described in *EC* Section 42238.02, that the LEA estimates it will receive in the coming year.

Projected Percentage to Increase or Improve Services for the Coming School Year

- Specify the estimated percentage by which services for unduplicated pupils must be increased or improved as compared to the services provided to all students in the LCAP year as calculated pursuant to 5 *CCR* Section 15496(a)(7).

LCFF Carryover — Percentage

- Specify the LCFF Carryover — Percentage identified in the LCFF Carryover Table. If a carryover percentage is not identified in the LCFF Carryover Table, specify a percentage of zero (0.00%).

LCFF Carryover — Dollar

- Specify the LCFF Carryover — Dollar amount identified in the LCFF Carryover Table. If a carryover amount is not identified in the LCFF Carryover Table, specify an amount of zero ($0).

Total Percentage to Increase or Improve Services for the Coming School Year

- Add the Projected Percentage to Increase or Improve Services for the Coming School Year and the Proportional LCFF Required Carryover Percentage and specify the percentage. This is the LEA's percentage by which services for unduplicated pupils must be increased or improved as compared to the services provided to all students in the LCAP year, as calculated pursuant to 5 *CCR* Section 15496(a)(7).

Required Descriptions:

LEA-wide and Schoolwide Actions

For each action being provided to an entire LEA or school, provide an explanation of (1) the unique identified need(s) of the unduplicated student group(s) for whom the action is principally directed, (2) how the action is designed to address the identified need(s) and why it is being provided on an LEA or schoolwide basis, and (3) the metric(s) used to measure the effectiveness of the action in improving outcomes for the unduplicated student group(s).

If the LEA has provided this required description in the Action Descriptions, state as such within the table.

Complete the table as follows:

Identified Need(s)

Provide an explanation of the unique identified need(s) of the LEA's unduplicated student group(s) for whom the action is principally directed.

An LEA demonstrates how an action is principally directed towards an unduplicated student group(s) when the LEA explains the need(s), condition(s), or circumstance(s) of the unduplicated student group(s) identified through a needs assessment and how the action addresses them. A meaningful needs assessment includes, at a minimum, analysis of applicable student achievement data and educational partner feedback.

How the Action(s) are Designed to Address Need(s) and Why it is Provided on an LEA-wide or Schoolwide Basis

Provide an explanation of how the action as designed will address the unique identified need(s) of the LEA's unduplicated student group(s) for whom the action is principally directed and the rationale for why the action is being provided on an LEA-wide or schoolwide basis.

- As stated above, conclusory statements that a service will help achieve an expected outcome for the goal, without an explicit connection or further explanation as to how, are not sufficient.

- Further, simply stating that an LEA has a high enrollment percentage of a specific student group or groups does not meet the increased or improved services standard because enrolling students is not the same as serving students.

Metric(s) to Monitor Effectiveness

Identify the metric(s) being used to measure the progress and effectiveness of the action(s).

Note for COEs and Charter Schools: In the case of COEs and charter schools, schoolwide and LEA-wide are considered to be synonymous.

Limited Actions

For each action being solely provided to one or more unduplicated student group(s), provide an explanation of (1) the unique identified need(s) of the unduplicated student group(s) being served, (2) how the action is designed to address the identified need(s), and (3) how the effectiveness of the action in improving outcomes for the unduplicated student group(s) will be measured.

If the LEA has provided the required descriptions in the Action Descriptions, state as such.

Complete the table as follows:

Identified Need(s)

Provide an explanation of the unique need(s) of the unduplicated student group(s) being served identified through the LEA's needs assessment. A meaningful needs assessment includes, at a minimum, analysis of applicable student achievement data and educational partner feedback.

How the Action(s) are Designed to Address Need(s)

Provide an explanation of how the action is designed to address the unique identified need(s) of the unduplicated student group(s) being served.

Metric(s) to Monitor Effectiveness

Identify the metric(s) being used to measure the progress and effectiveness of the action(s).

For any limited action contributing to meeting the increased or improved services requirement that is associated with a Planned Percentage of Improved Services in the Contributing Summary Table rather than an expenditure of LCFF funds, describe the methodology that was used to determine the contribution of the action towards the proportional percentage, as applicable.

- For each action with an identified Planned Percentage of Improved Services, identify the goal and action number and describe the methodology that was used.
- When identifying a Planned Percentage of Improved Services, the LEA must describe the methodology that it used to determine the contribution of the action towards the proportional percentage. The percentage of improved services for an action corresponds to the amount of LCFF funding that the LEA estimates it would expend to implement the action if it were funded.

- For example, an LEA determines that there is a need to analyze data to ensure that instructional aides and expanded learning providers know what targeted supports to provide to students who are foster youth. The LEA could implement this action by hiring additional staff to collect and analyze data and to coordinate supports for students, which, based on the LEA's current pay scale, the LEA estimates would cost $165,000. Instead, the LEA chooses to utilize a portion of existing staff time to analyze data relating to students who are foster youth. This analysis will then be shared with site principals who will use the data to coordinate services provided by instructional assistants and expanded learning providers to target support to students. In this example, the LEA would divide the estimated cost of $165,000 by the amount of LCFF Funding identified in the Total Planned Expenditures Table and then convert the quotient to a percentage. This percentage is the Planned Percentage of Improved Services for the action.

Additional Concentration Grant Funding

A description of the plan for how the additional concentration grant add-on funding identified above will be used to increase the number of staff providing direct services to students at schools that have a high concentration (above 55 percent) of foster youth, English learners, and low-income students, as applicable.

An LEA that receives the additional concentration grant add-on described in *EC* Section 42238.02 is required to demonstrate how it is using these funds to increase the number of staff who provide direct services to students at schools with an enrollment of unduplicated students that is greater than 55 percent as compared to the number of staff who provide direct services to students at schools with an enrollment of unduplicated students that is equal to or less than 55 percent. The staff who provide direct services to students must be certificated staff and/or classified staff employed by the LEA; classified staff includes custodial staff.

Provide the following descriptions, as applicable to the LEA:

- An LEA that does not receive a concentration grant or the concentration grant add-on must indicate that a response to this prompt is not applicable.

- Identify the goal and action numbers of the actions in the LCAP that the LEA is implementing to meet the requirement to increase the number of staff who provide direct services to students at schools with an enrollment of unduplicated students that is greater than 55 percent.

- An LEA that does not have comparison schools from which to describe how it is using the concentration grant add-on funds, such as a single-school LEA or an LEA that only has schools with an enrollment of unduplicated students that is greater than 55 percent, must describe how it is using the funds to increase the number of credentialed staff, classified staff, or both, including custodial staff, who provide direct services to students at selected schools and the criteria used to determine which schools require additional staffing support.

- In the event that an additional concentration grant add-on is not sufficient to increase staff providing direct services to students at a school with an enrollment of unduplicated students that is greater than 55 percent, the LEA must describe how it is using the funds to retain staff providing direct services to students at a school with an enrollment of unduplicated students that is greater than 55 percent.

Complete the table as follows:

- Provide the staff-to-student ratio of classified staff providing direct services to students with a concentration of unduplicated students that is 55 percent or less and the staff-to-student ratio of classified staff providing direct services to students at schools with a concentration of unduplicated students that is greater than 55 percent, as applicable to the LEA.
    - The LEA may group its schools by grade span (Elementary, Middle/Junior High, and High Schools), as applicable to the LEA.
    - The staff-to-student ratio must be based on the number of full-time equivalent (FTE) staff and the number of enrolled students as counted on the first Wednesday in October of each year.
- Provide the staff-to-student ratio of certificated staff providing direct services to students at schools with a concentration of unduplicated students that is 55 percent or less and the staff-to-student ratio of certificated staff providing direct services to students at schools with a concentration of unduplicated students that is greater than 55 percent, as applicable to the LEA.
    - The LEA may group its schools by grade span (Elementary, Middle/Junior High, and High Schools), as applicable to the LEA.
    - The staff-to-student ratio must be based on the number of FTE staff and the number of enrolled students as counted on the first Wednesday in October of each year.

Action Tables

Complete the Total Planned Expenditures Table for each action in the LCAP. The information entered into this table will automatically populate the other Action Tables. Information is only entered into the Total Planned Expenditures Table, the Annual Update Table, the Contributing Actions Annual Update Table, and the LCFF Carryover Table. The word “input” has been added to column headers to aid in identifying the column(s) where information will be entered. Information is not entered on the remaining Action tables.

The following tables are required to be included as part of the LCAP adopted by the local governing board or governing body:

- Table 1: Total Planned Expenditures Table (for the coming LCAP Year)
- Table 2: Contributing Actions Table (for the coming LCAP Year)
- Table 3: Annual Update Table (for the current LCAP Year)
- Table 4: Contributing Actions Annual Update Table (for the current LCAP Year)
- Table 5: LCFF Carryover Table (for the current LCAP Year)

Note: The coming LCAP Year is the year that is being planned for, while the current LCAP year is the current year of implementation. For example, when developing the 2024–25 LCAP, 2024–25 will be the coming LCAP Year and 2023–24 will be the current LCAP Year.

Total Planned Expenditures Table

In the Total Planned Expenditures Table, input the following information for each action in the LCAP for that applicable LCAP year:

- **LCAP Year**: Identify the applicable LCAP Year.
- **1. Projected LCFF Base Grant**: Provide the total amount estimated LCFF entitlement for the coming school year, excluding the supplemental and concentration grants and the add-ons for the Targeted Instructional Improvement Block Grant program, the former Home-to-School Transportation program, and the Small School District Transportation program, pursuant to 5 *CCR* Section 15496(a)(8). Note that the LCFF Base Grant for purposes of the LCAP also includes the Necessary Small Schools and Economic Recovery Target allowances for school districts, and County Operations Grant for COEs.

  See *EC* sections 2574 (for COEs) and 42238.02 (for school districts and charter schools), as applicable, for LCFF entitlement calculations.
- **2. Projected LCFF Supplemental and/or Concentration Grants:** Provide the total amount of LCFF supplemental and concentration grants estimated on the basis of the number and concentration of unduplicated students for the coming school year.
- **3. Projected Percentage to Increase or Improve Services for the Coming School Year:** This percentage will not be entered; it is calculated based on the Projected LCFF Base Grant and the Projected LCFF Supplemental and/or Concentration Grants, pursuant to 5 *CCR* Section 15496(a)(8). This is the percentage by which services for unduplicated pupils must be increased or improved as compared to the services provided to all students in the coming LCAP year.
- **LCFF Carryover — Percentage:** Specify the LCFF Carryover — Percentage identified in the LCFF Carryover Table from the prior LCAP year. If a carryover percentage is not identified in the LCFF Carryover Table, specify a percentage of zero (0.00%).
- **Total Percentage to Increase or Improve Services for the Coming School Year:** This percentage will not be entered; it is calculated based on the Projected Percentage to Increase or Improve Services for the Coming School Year and the LCFF Carryover — Percentage. ***This is the percentage by which the LEA must increase or improve services for unduplicated pupils as compared to the services provided to all students in the coming LCAP year.***
- **Goal #**: Enter the LCAP Goal number for the action.
- **Action #**: Enter the action's number as indicated in the LCAP Goal.
- **Action Title**: Provide a title of the action.
- **Student Group(s)**: Indicate the student group or groups who will be the primary beneficiary of the action by entering "All," or by entering a specific student group or groups.

- **Contributing to Increased or Improved Services?:** Type "Yes" if the action **is** included as contributing to meeting the increased or improved services requirement; OR, type "No" if the action is **not** included as contributing to meeting the increased or improved services requirement.

- If "Yes" is entered into the Contributing column, then complete the following columns:

    - **Scope**: The scope of an action may be LEA-wide (i.e., districtwide, countywide, or charterwide), schoolwide, or limited. An action that is LEA-wide in scope upgrades the entire educational program of the LEA. An action that is schoolwide in scope upgrades the entire educational program of a single school. An action that is limited in its scope is an action that serves only one or more unduplicated student groups.

    - **Unduplicated Student Group(s)**: Regardless of scope, contributing actions serve one or more unduplicated student groups. Indicate one or more unduplicated student groups for whom services are being increased or improved as compared to what all students receive.

    - **Location**: Identify the location where the action will be provided. If the action is provided to all schools within the LEA, the LEA must indicate "All Schools." If the action is provided to specific schools within the LEA or specific grade spans only, the LEA must enter "Specific Schools" or "Specific Grade Spans." Identify the individual school or a subset of schools or grade spans (e.g., all high schools or grades transitional kindergarten through grade five), as appropriate.

- **Time Span**: Enter "ongoing" if the action will be implemented for an indeterminate period of time. Otherwise, indicate the span of time for which the action will be implemented. For example, an LEA might enter "1 Year," or "2 Years," or "6 Months."

- **Total Personnel**: Enter the total amount of personnel expenditures utilized to implement this action.

- **Total Non-Personnel**: This amount will be automatically calculated based on information provided in the Total Personnel column and the Total Funds column.

- **LCFF Funds**: Enter the total amount of LCFF funds utilized to implement this action, if any. LCFF funds include all funds that make up an LEA's total LCFF target (i.e., base grant, grade span adjustment, supplemental grant, concentration grant, Targeted Instructional Improvement Block Grant, and Home-To-School Transportation).

    - **Note:** For an action to contribute towards meeting the increased or improved services requirement, it must include some measure of LCFF funding. The action may also include funding from other sources, however the extent to which an action contributes to meeting the increased or improved services requirement is based on the LCFF funding being used to implement the action.

- **Other State Funds**: Enter the total amount of Other State Funds utilized to implement this action, if any.

    - **Note:** Equity Multiplier funds must be included in the "Other State Funds" category, not in the "LCFF Funds" category. As a reminder, Equity Multiplier funds must be used to supplement, not supplant, funding provided to Equity Multiplier schoolsites for purposes of the LCFF, the ELO-P, the LCRS, and/or the CCSPP. This means that Equity Multiplier funds must not be used to

replace funding that an Equity Multiplier schoolsite would otherwise receive to implement LEA-wide actions identified in the LEA's LCAP or that an Equity Multiplier schoolsite would otherwise receive to implement provisions of the ELO-P, the LCRS, and/or the CCSPP.

- **Local Funds**: Enter the total amount of Local Funds utilized to implement this action, if any.
- **Federal Funds**: Enter the total amount of Federal Funds utilized to implement this action, if any.
- **Total Funds**: This amount is automatically calculated based on amounts entered in the previous four columns.
- **Planned Percentage of Improved Services**: For any action identified as contributing, being provided on a Limited basis to unduplicated students, and that does not have funding associated with the action, enter the planned quality improvement anticipated for the action as a percentage rounded to the nearest hundredth (0.00%). A limited action is an action that only serves foster youth, English learners, and/or low-income students.
    - As noted in the instructions for the Increased or Improved Services section, when identifying a Planned Percentage of Improved Services, the LEA must describe the methodology that it used to determine the contribution of the action towards the proportional percentage. The percentage of improved services for an action corresponds to the amount of LCFF funding that the LEA estimates it would expend to implement the action if it were funded.

      For example, an LEA determines that there is a need to analyze data to ensure that instructional aides and expanded learning providers know what targeted supports to provide to students who are foster youth. The LEA could implement this action by hiring additional staff to collect and analyze data and to coordinate supports for students, which, based on the LEA's current pay scale, the LEA estimates would cost $165,000. Instead, the LEA chooses to utilize a portion of existing staff time to analyze data relating to students who are foster youth. This analysis will then be shared with site principals who will use the data to coordinate services provided by instructional assistants and expanded learning providers to target support to students. In this example, the LEA would divide the estimated cost of $165,000 by the amount of LCFF Funding identified in the Data Entry Table and then convert the quotient to a percentage. This percentage is the Planned Percentage of Improved Services for the action.

Contributing Actions Table

As noted above, information will not be entered in the Contributing Actions Table; however, the 'Contributing to Increased or Improved Services?' column will need to be checked to ensure that only actions with a "Yes" are displaying. If actions with a "No" are displayed or if actions that are contributing are not displaying in the column, use the drop-down menu in the column header to filter only the "Yes" responses.

Annual Update Table

In the Annual Update Table, provide the following information for each action in the LCAP for the relevant LCAP year:

- **Estimated Actual Expenditures**: Enter the total estimated actual expenditures to implement this action, if any.

Contributing Actions Annual Update Table

In the Contributing Actions Annual Update Table, check the 'Contributing to Increased or Improved Services?' column to ensure that only actions with a "Yes" are displaying. If actions with a "No" are displayed or if actions that are contributing are not displaying in the column, use the drop-down menu in the column header to filter only the "Yes" responses. Provide the following information for each contributing action in the LCAP for the relevant LCAP year:

- **6. Estimated Actual LCFF Supplemental and/or Concentration Grants:** Provide the total amount of LCFF supplemental and concentration grants estimated based on the number and concentration of unduplicated students in the current school year.

- **Estimated Actual Expenditures for Contributing Actions**: Enter the total estimated actual expenditure of LCFF funds used to implement this action, if any.

- **Estimated Actual Percentage of Improved Services:** For any action identified as contributing, being provided on a Limited basis only to unduplicated students, and that does not have funding associated with the action, enter the total estimated actual quality improvement anticipated for the action as a percentage rounded to the nearest hundredth (0.00%).

    - Building on the example provided above for calculating the Planned Percentage of Improved Services, the LEA in the example implements the action. As part of the annual update process, the LEA reviews implementation and student outcome data and determines that the action was implemented with fidelity and that outcomes for foster youth students improved. The LEA reviews the original estimated cost for the action and determines that had it hired additional staff to collect and analyze data and to coordinate supports for students that estimated actual cost would have been $169,500 due to a cost of living adjustment. The LEA would divide the estimated actual cost of $169,500 by the amount of LCFF Funding identified in the Data Entry Table and then convert the quotient to a percentage. This percentage is the Estimated Actual Percentage of Improved Services for the action.

LCFF Carryover Table

- **9. Estimated Actual LCFF Base Grant**: Provide the total amount of estimated LCFF Target Entitlement for the current school year, excluding the supplemental and concentration grants and the add-ons for the Targeted Instructional Improvement Block Grant program, the former Home-to-School Transportation program, and the Small School District Transportation program, pursuant to 5 *CCR* Section 15496(a)(8). Note that the LCFF Base Grant for purposes of the LCAP also includes the Necessary Small Schools and Economic Recovery Target allowances for school districts, and County Operations Grant for COEs. See *EC* sections 2574 (for COEs) and 42238.02 (for school districts and charter schools), as applicable, for LCFF entitlement calculations.

- **10. Total Percentage to Increase or Improve Services for the Current School Year:** This percentage will not be entered. The percentage is calculated based on the amounts of the Estimated Actual LCFF Base Grant (9) and the Estimated Actual LCFF Supplemental and/or Concentration Grants (6), pursuant to 5 *CCR* Section 15496(a)(8), plus the LCFF Carryover – Percentage from the prior year. This is the percentage by which services for unduplicated pupils must be increased or improved as compared to the services provided to all students in the current LCAP year.

Calculations in the Action Tables

To reduce the duplication of effort of LEAs, the Action Tables include functionality such as pre-population of fields and cells based on the information provided in the Data Entry Table, the Annual Update Summary Table, and the Contributing Actions Table. For transparency, the functionality and calculations used are provided below.

Contributing Actions Table

- **4. Total Planned Contributing Expenditures (LCFF Funds)**
    - This amount is the total of the Planned Expenditures for Contributing Actions (LCFF Funds) column.
- **5. Total Planned Percentage of Improved Services**
    - This percentage is the total of the Planned Percentage of Improved Services column.
- **Planned Percentage to Increase or Improve Services for the coming school year (4 divided by 1, plus 5)**
    - This percentage is calculated by dividing the Total Planned Contributing Expenditures (4) by the Projected LCFF Base Grant (1), converting the quotient to a percentage, and adding it to the Total Planned Percentage of Improved Services (5).

Contributing Actions Annual Update Table

Pursuant to *EC* Section 42238.07(c)(2), if the Total Planned Contributing Expenditures (4) is less than the Estimated Actual LCFF Supplemental and Concentration Grants (6), the LEA is required to calculate the difference between the Total Planned Percentage of Improved Services (5) and the Total Estimated Actual Percentage of Improved Services (7). If the Total Planned Contributing Expenditures (4) is equal to or greater than the Estimated Actual LCFF Supplemental and Concentration Grants (6), the Difference Between Planned and Estimated Actual Percentage of Improved Services will display "Not Required."

- **6. Estimated Actual LCFF Supplemental and Concentration Grants**
    - This is the total amount of LCFF supplemental and concentration grants the LEA estimates it will actually receive based on the number and concentration of unduplicated students in the current school year.
- **4. Total Planned Contributing Expenditures (LCFF Funds)**
    - This amount is the total of the Last Year's Planned Expenditures for Contributing Actions (LCFF Funds).
- **7. Total Estimated Actual Expenditures for Contributing Actions**
    - This amount is the total of the Estimated Actual Expenditures for Contributing Actions (LCFF Funds).
- **Difference Between Planned and Estimated Actual Expenditures for Contributing Actions (Subtract 7 from 4)**

- This amount is the Total Estimated Actual Expenditures for Contributing Actions (7) subtracted from the Total Planned Contributing Expenditures (4).

- **5. Total Planned Percentage of Improved Services (%)**
  - This amount is the total of the Planned Percentage of Improved Services column.
- **8. Total Estimated Actual Percentage of Improved Services (%)**
  - This amount is the total of the Estimated Actual Percentage of Improved Services column.
- **Difference Between Planned and Estimated Actual Percentage of Improved Services (Subtract 5 from 8)**
  - This amount is the Total Planned Percentage of Improved Services (5) subtracted from the Total Estimated Actual Percentage of Improved Services (8).

LCFF Carryover Table

- **10. Total Percentage to Increase or Improve Services for the Current School Year (6 divided by 9 plus Carryover %)**
  - This percentage is the Estimated Actual LCFF Supplemental and/or Concentration Grants (6) divided by the Estimated Actual LCFF Base Grant (9) plus the LCFF Carryover – Percentage from the prior year.
- **11. Estimated Actual Percentage of Increased or Improved Services (7 divided by 9, plus 8)**
  - This percentage is the Total Estimated Actual Expenditures for Contributing Actions (7) divided by the LCFF Funding (9), then converting the quotient to a percentage and adding the Total Estimated Actual Percentage of Improved Services (8).
- **12. LCFF Carryover — Dollar Amount LCFF Carryover (Subtract 11 from 10 and multiply by 9)**
  - If the Estimated Actual Percentage of Increased or Improved Services (11) is less than the Estimated Actual Percentage to Increase or Improve Services (10), the LEA is required to carry over LCFF funds.

    The amount of LCFF funds is calculated by subtracting the Estimated Actual Percentage to Increase or Improve Services (11) from the Estimated Actual Percentage of Increased or Improved Services (10) and then multiplying by the Estimated Actual LCFF Base Grant (9). This amount is the amount of LCFF funds that is required to be carried over to the coming year.
- **13. LCFF Carryover — Percentage (12 divided by 9)**
  - This percentage is the unmet portion of the Percentage to Increase or Improve Services that the LEA must carry over into the coming LCAP year. The percentage is calculated by dividing the LCFF Carryover (12) by the LCFF Funding (9).

Burbank Unified School District
Instructional Services

REPORT TO THE BOARD

TO:	Members of the Board of Education
FROM :	Peter Knapik, Assistant Superintendent of Educational Services
PREPARED BY:	Robyn Anders, Director of Instructional Technology & Accountability
SUBMITTED BY:	Laura Erisman, Administrative Secretary
DATE:	June 25, 2026
SUBJECT:	Approval of Status of Local Indicators

Background:

The Local Control Funding Formula (LCFF) was passed in 2013 establishing California's new accountability system based on multiple measures. These measures are used to determine District and school progress toward meeting the needs of students. The measures are based on various elements that contribute to a quality education, including high school graduation rates, college/career readiness, student test scores, English Learner progress, suspension rates, chronic absenteeism, and parent engagement.

The current state indicators do not measure several LCFF priority areas. These remaining priority areas are considered local indicators. Districts must do a self-review to determine if they have *Met, Not Met, or Not Met for Two or More Years* each local indicator. Districts will use the local indicators to evaluate and report their progress on priority areas. After the self-review, districts then report this information to the CDE for inclusion on the California State Dashboard by July 31, 2026. This timeline was modified beginning in 2021, so the report to the board on the local indicators must be aligned with the approval of the Local Control Accountability Plan. However, the data will not be posted to the California State Dashboard until the fall of 2026.

District-Wide Goals for 2025-2026:

1. Students will be career/college ready via high-quality instruction.
2. Students will be physically, emotionally, and mentally healthy.
3. Recruit and retain highly qualified employees.
4. Maintain Efficient and effective operations.

Discussion and Issues:

In order to assess progress towards the priorities, Districts are required to complete the self-reflection tool below. The self-reflection tool included the following questions:
The scale when applicable is 1-5 with five as the highest.

1- Exploration and Research Phase
2- Beginning Development
3- Initial Implementation
4- Full Implementation
5- Full Implementation and Sustainability

Self- Reflection Tool:

Appropriately Assigned Teachers, Access to Curriculum-Aligned Instructional Materials, and Safe, Clean and Functional School Facilities

- What is the number of misassignments of teachers of English learners, total teacher misassignments, and vacant teacher positions?

Total FTE	Clear	Out-of-Field	Intern	Ineffective	Incomplete	Unknown	N/A
612.1	83.8%	4.3%	1.0%	6.8%	4.1%	0.0%	0.0%

- What is the number of students without access to their own copies of standards-aligned instructional materials for use at school and at home?
    - **0**
- What is the number of identified instances where facilities do not meet the "good repair" standard (including deficiencies and extreme deficiencies)
    - **0**

Priority 2-Recently Adopted Academic Standards and/or Curriculum Frameworks

1. Rate the local education agency's progress in providing professional learning for teaching to the recently adopted academic standards and/or curriculum frameworks identified below.
    - English Language Arts **5**
    - English Language Development **5**
    - Mathematics **5**
    - Next Generation Science Standards **4**
    - History-Social Science **4**
2. Rate the local educational agency's progress in making instructional materials that are aligned to the recently adopted academic standards and/or curriculum frameworks identified below in all classrooms where the subject is taught.
    - English Language Arts **3**
    - English Language Development **5**
    - Mathematics **3**
    - Next Generation Science Standards **4**
    - History-Social Science **4**
3. Rate the local educational agency's progress in implementing policies or programs to support staff in identifying areas where they can improve in delivering instruction aligned to the recently adopted academics standards and/or curriculum frameworks identified below:

- English Language Arts **4**
- English Language Development **4**
- Mathematics **5**
- Next Generation Science Standards **4**
- History-Social Science **4**

Other Adopted Standards

4. Rate the local educational agency's progress implementing each of the following academic standards adopted by the State Board of Education for all students.

    - Career Technical Education **5**
    - Health Education Content Standards **5**
    - Physical Education Model Content Standards **5**
    - Visual and Performing Arts **4**
    - World Language **4**

The charts below show the status of the local assessments that the district uses to measure progress towards the standards.

Elementary Local Assessments:

	English/Reading Language Arts			**Math**		
	Fall	**Winter**	**Spring**	**Fall**	**Winter**	**Spring**
	BOY	**MOY**	**EOY**	**BOY**	**MOY**	**EOY**
K		STAR Reading	STAR Reading		Math NS Screener	Math NS Screener
1	STAR Reading	STAR Reading	STAR Reading	Math NS Screener	Math NS Screener	Math NS Screener
2	STAR Reading	STAR Reading	STAR Reading	Math NS Screener	Math NS Screener	Math NS Screener
3	STAR Reading	STAR Reading	STAR Reading	Math NS Screener	Math NS Screener	Math NS Screener
4	STAR Reading	STAR Reading	STAR Reading	Math NS Screener	Math NS Screener	Math NS Screener
5	STAR Reading	STAR Reading	STAR Reading	Math NS Screener	Math NS Screener	Math NS Screener

Secondary Local Assessments:

English		**Math**		**Science**		**Social Sci**	
Fall	**Spring**	**Fall**	**Spring**	**Fall**	**Spring**	**Fall**	**Spring**
Interim Assessment Grade 6	Interim Assessment Grade 6	Math 6(1) Math 6(2) Math 6(3)	Math 6(1) Math 6(2) Math 6(3)	Science 6	Science 6	Soc Sci 6	Soc Sci 6
Interim Assessment Grade 7	Interim Assessment Grade 7	Math 7(1) Math 7(2) Algebra	Math 7(1) Math 7(2) Algebra	Science 7	Science 7	Soc Sci 7	Soc Sci 7
Interim	Interim	Math 8	Math 8	Science 8	Science 8	Soc Sci 8	Soc Sci 8

Assessment Grade 8	Assessment Grade 8	Algebra Geometry	Algebra Geometry				
English		**Math**		**Science**		**Social Sci**	
Fall	**Spring**	**Fall**	**Spring**	**Fall**	**Spring**	**Fall**	**Spring**
Eng 9 DWP	Eng 9 DWP	Algebra Geometry Algebra 2	Algebra Geometry Algebra 2	Health Adoption Biology	Health Adoption Biology		
Eng 10 DWP	Eng 10 DWP	Algebra Geometry Algebra 2 Pre-Cal	Algebra Geometry Algebra 2 Pre-Cal	Chemistry	Chemistry	World History	World History
Eng 11 AP Eng Lang DWP	Eng 11 Ap Eng Lang DWP	Geometry Algebra 2 Pre-Cal	Geometry Algebra 2 Pre-Cal	Chemistry	Chemistry	US History	US History
Eng 12 AP Lit DWP	Eng 12 AP Lit DWP	Algebra 2 Pre-Cal	Algebra 2 Pre-Cal	Anatomy Phys	Anatomy Phys	Gov./Econ	Gov./Econ

PE 6	PE 6	PE 7	PE 7	PE 8	PE 8	PE 9	PE 9	PE 10-12	PE 10-12
World Language 1st Year w/ New Textbook									

Summary of Student Performance on Local Benchmarks:
2025-2026 Local Assessment Results

English Language Arts

- In 2025-2026, 59.9% of Elementary students scored proficient on the most recent Star Reading assessment District Benchmark.
- In 2025-2026, 53.7% of Middle School students scored near standard, and 27.7% scored above standard on local reading assessments.
- In 2025-2026, 55.17% of High School students scored proficient on the District Writing Prompt.

Mathematics

- In 2025-2026, 55.3% of Elementary students scored proficient on the end-of-year math assessment.
- In 2025-2026, 61.7% of Middle School students scored proficient on the end-of-year math assessment.
- In 2025-2026, 48.3% of High School students scored proficient on the spring Math District Benchmark

Support for Teachers and Administrators

5. During the 2022-2023 school year (including summer 2022). Rate the local educational agency's success at engaging in the following activities with teachers and school administrators.
   - Identifying the professional learning needs of groups of teachers or staff as a whole **3**
   - Identifying the professional learning needs of individual teachers **4**
   - Providing support for teachers on the standards that they have not yet mastered. **4**

Criteria: Please assess the local educational agency performance on meeting the standard by designating the following: Met, Not Met, or Not Met for Two or More Years- **Met**

Districtwide Trainings
Preservice week

- Child Abuse Reporting Training
- Title IX
- Sexual Harassment in the Workplace
- Student Mental Health Training
- Diversity, Equity, & Inclusion

District PD Calendar

- Read & Write (ongoing)
- Canva PD
- Science Task Force
- Social Science Task Force
- PE Task Force
- ELA Scoring Day
- Adobe Create Cloud
- World Language Task Force
- CA Ed Partners/PLC work
- PLC Site-Based (Math)
- GATE PD
- Adobe Express Training
- Math Collaborative HS
- Math Collaborative MS
- Math Collaborative ES
- Project Glad 2-Day Research & Theory
- VAPA Task Force
- Project GLAD
- Ethnic Studies Collaboration
- STEM Elementary Teacher Trainings
- DEI Site Lead Professional Development

ELD PD

- Project GLAD (elementary)
- Theater Arts Integration in English Language Development Classes (Designated ELD teachers, Middle & High School)
- "A Glimpse of GLAD" - introduction to Project GLAD (select elementary schools)
- Project GLAD Follow-up PD (select elementary schools)
- High Leverage Strategies for Working with ELs (Middle school teachers)
- Working with ELs (BHS teachers)

District PLC and Small-Group Professional Development

- Rubric Grading PD for Muir Math Teachers
- Rubric Grading PD for Huerta Math Teachers
- CPM Textbook Training for New Secondary Math Teachers
- CPM Textbook Training for New Teachers

Districtwide SPED Trainings

- Pre-Service: Compliant IEPs
- Pre-Service: Case Management

- Pre-Service: Classroom Management
- Becoming a "Para-Pro"
- Verbal De-Escalation
- Initial SEIS Training
- Admin Designee Training
- SEIS Workshop
- Defensible Reports Presentation
- Suicide Prevention Training
- Best Practices in Assessment & Legal Update
- Teaching a Skill and Data Collection
- Reading, Understanding, and Implementing BIPs
- Verbal De-Escalation
- Positive Behavior Intervention Supports
- Teaching a Skill and Data Collection
- Reading, Understanding, and Implementing BIPs
- Building Better Behavior Intervention Plans
- "Positive Behavior Intervention Supports
- Functions of Behavior
- All Middle School Collaboration"
- Intro to ABA and Autism
- IEP Notes Training
- Admin Designee and Notes Taking Training
- Unique Learning Training
- Alternative Pathways to Diploma Training
- Interdisciplinary Assessment of Girls with Suspected Autism: Reframing our Thinking

Instructional Technology

- Tech Tuesday Newsletter
- Multiple 1-1 training sessions with teachers throughout the year
- AERIES Gradebook Trainings
- Artificial Intelligence PD: District Office Departments, Individual School Sites
- Canva PD
- Updates to Professional Development Website

Induction PD:

- Aspects of an Engaged Classroom
- Principles of Quality Assessment
- IEP Case Management
- Classroom Environment/Classroom Management
- Universal Design for Learning
- Differentiating Instruction
- Role of a Gen Ed Teacher in SST, 504 and IEP meetings
- California Standards for the Teaching Profession

In addition, all Induction participants are invited to PDs through our Cluster 4 Induction Cohort. They were:

Priority 3 -Parent and Family Engagement:

1. Rate the LEA's progress in developing the capacity of staff (i.e. administrators, teachers, and classified staff) to build trusting and respectful relationships with families.

- **4 – Full Implementation**

2. Rate the LEA's progress in creating welcoming environments for all families in the community.

- **4 – Full Implementation**

3. Rate the LEA's progress in supporting staff to learn about each family's strengths, cultures, languages, and goals for their children.

- **4 – Full Implementation**

4. Rate the LEA's progress in developing multiple opportunities for the LEA and school sites to engage in 2-way communication between families and educators using language that is understandable and accessible to families.

- **4 – Full Implementation**

Building Relationships Dashboard Narrative Boxes

1. Based on the analysis of educational partner input and local data, briefly describe the LEA's current strengths and progress in Building Relationships Between School Staff and Families.

The District Parent Involvement Policy is distributed annually to all staff, parents, and guardians as part of our Annual Notice to Parents at the beginning of each new school year. The Parent Involvement Policy complies with both Federal and State regulations.
Title I schools, as well as non-Title I schools, review the Parent Involvement Policy annually at regularly scheduled School Site Council meetings. Annually, the Policy is reviewed by parents at a Title I School meeting. Additionally, at the annual Title I parent meeting, the elementary and middle school State Standards and grade-level curricula are reviewed to increase parents' understanding of elementary and middle school student expectations and requirements. Non-Title I schools also review State Standards and the grade-level/subject area curricula. High schools provide this information through teachers and at parent meetings.

Parents and guardians are provided information on their child's progress through failure notices, progress reports, and report cards. At elementary schools, parent conferences are held at the end of the first and second trimesters, allowing parents/guardians to meet individually with teachers to discuss student progress toward proficiency on grade-level standards. Middle school and high schools do have parent conference days; however, parents are advised to contact teachers to contact teachers on grades, etc. at any time. In addition, parents have access to an online Aeries Parent Portal through which they can learn about their students' daily attendance, grades, test scores, and additional information. Teachers are available beyond those two designated windows for conferences, too.
For State assessments like CAASPP (California Assessment of Student Performance and Progress), parents receive an explanation of their child's performance on CAASPP as compared to State proficiency expectations each year that their child is tested.
Parent involvement in the LCAP process through scheduled meetings provides another venue for parents to ask questions and for the district to give parents information about the resources identified in the LCAP and how they will prepare their children for success.
BUSD provides materials and training through several avenues in our Title I school and non-Title I schools. Parents of incoming Transitional Kindergarten and Kindergarten students are provided with information that they can work with their children at home. Materials and resources are provided to give concrete information on helping children at home. Information on State Frameworks, State Standards, curriculum, instruction,

grading, testing, etc., is imparted to parents and guardians. BUSD's approach is that economic status does not affect parents' opportunity to support their child's learning. Principals, support staff, and teachers at all grade levels, from Transitional Kindergarten through high school, provide individual and group training to parents about how to use the student information parent portal to access real-time attendance and grade information. Elementary schools and middle schools hold family math nights where parents learn about the math curriculum and how to help their students. These sessions include training on accessing the online components of the English language arts and math curriculum.

2. Based on the analysis of educational partner input and local data, briefly describe the LEA's focus area(s) for improvement in Building Relationships Between School Staff and Families.

Feedback from BUSD parents through our annual school satisfaction survey indicates that parents want to continue to be able to access school information in a variety of ways. The majority of families still prefer getting information via email from school staff and Principals.
BUSD is focused on providing timely updates and information to parents and families when emergencies occur on campus. Information about our processes and communication plans has been shared with families so they are more familiar with our patterns of communication and what to expect in emergencies.
Lastly, discussions, training, and professional development regarding Diversity, Equity, and Inclusion have brought increased attention to how we interact and respond to parents and families with diverse backgrounds or unique needs.

3. Based on the analysis of educational partner input and local data, briefly describe how the LEA will improve the engagement of underrepresented families identified during the self-reflection process in relation to Building Relationships Between School Staff and Families.

Multiple modes of communication between families and District staff address families' diverse needs and interests. Information is provided through phone contact, text messaging, emails, Facebook, Instagram, website postings, and newsletters. Notices are also mailed home in a timely fashion. Communication is translated into the required languages, primarily Armenian and Spanish, per the Education Code in a format that communicates well to parents. Families receive text messages if they opt in, and/or phone calls providing them with critical school information. In addition, parents have access to an online Aeries Parent Portal through which they can learn about their students' daily attendance, grades, test scores, Individualized Education Plan, English Learner status, graduation requirements, discipline records, transportation schedule, lunch application, health records, and contact information.

<u>Section 2: Building Partnerships for Student Outcomes</u>

5. Rate the LEA's progress in providing professional learning and support to teachers and principals to improve a school's capacity to partner with families.

- **3 – Initial Implementation**

6. Rate the LEA's progress in providing families with information and resources to support student learning and development in the home.

- **4 – Full Implementation**

7. Rate the LEA's progress in implementing policies or programs for teachers to meet with families and students to discuss student progress and ways to work together to support improved student outcomes.

- **4 – Full Implementation**

8. Rate the LEA's progress in supporting families to understand and exercise their legal rights and advocate for their own students and all students.

- **4 – Full Implementation**

1. Based on the analysis of educational partner input and local data, briefly describe the LEA's current strengths and progress in Building Partnerships for Student Outcomes.

BUSD gathers input from parents, especially those whose children are eligible for Socio-economic Disadvantaged, English Learners, Foster Youth, and Students Experiencing Homelessness services, in multiple ways including surveys, school site meetings, English Learner Advisory Committee (ELAC) meetings, District English Learner Advisory Committee (DELAC) meetings, Title I Advisory meetings, School Site Council (SSC), and other parent meetings. Staff and Principals are always available to work with families and guardians. District and school-level parent involvement policies are annually evaluated and reviewed for revision to ensure that the policy is up-to-date and is being carried out. The Board of Education approves changes to Board Policy and Administrative Regulations annually as needed. School and district policies are distributed through the annual notification. The District and school sites regularly send communications to families and staff about safety updates, operational updates, curricular updates, and special events. The District and schools also maintain websites with information on demand.

The key findings of commendation from the school satisfaction survey were the following:

- **School Environment**
  - **Overall, respondents in 2026 continue to express favorable opinions about the school environments at BUSD.**
- **Principal Evaluation**
  - **In line with prior results, respondents this year express generally positive opinions about school principals.**
- **Parent Participation**
  - **Measures of parent participation continue to be largely positive.**
- **Bullying**
  - **Overall, perceptions of bullying have continued to improve, but respondents still express concern in some areas.**
- **Career and Technical Education (CTE), Plans After High School, and Overall Satisfaction**
  - **Student participation in CTE courses increased somewhat from 30% in 2025 to 37% this year, while involvement with NAF Academies decreased slightly from 15% last year to 9% this year. Perceptions of both of these programs remain steady and mostly positive.**

2. Based on the analysis of educational partner input and local data, briefly describe the LEA's focus area(s) for improvement in Building Partnerships for Student Outcomes.

Based on national and local trends, a primary focus of improvement for BUSD has been creating a more inclusive and diverse school community and culture. For the past three years, BUSD has been building partnerships around Diversity, Equity, and Inclusion (DEI). Parents, staff, and administration have participated in discussions, in-services, and implementation of new practices and supports for students. The work in DEI will continue with an advisory group of teachers. The work includes consultants, site leaders, and administrators. This is an area of improvement to ensure practices become part of our school culture and foundational beliefs with an impact on classroom and student outcomes. Parents will be encouraged to participate in governance at the school and District levels. Parents will be encouraged to participate in the SSCs, ELACs, DELACs, the PTAs, and Fundraising Committees at schools. The District will utilize a robust parent volunteer program to continue to provide parents opportunities to be involved in their child(ren)'s school by providing a variety of volunteer activities.

The key findings of commendation from the school satisfaction survey were the following:

- **LCAP**
  - **As in prior years, staff respondents are more familiar with BUSD's LCAP than parent respondents are. Close to half of parents (46%) are not at all familiar with BUSD's LCAP, compared to about a quarter of staff members (23%).**
- **District Leadership**
  - **In contrast, parents and staff members do not have high opinions of district office administrators, and respondents in 2026 have less favorable perceptions than earlier respondents.**
- **Professional Development**
  - **Professional development (PD) provided by district schools remains a potential area for growth.**
- **Positive Behavioral Interventions and Supports (PBIS)**
  - **As in prior years, school staff are knowledgeable about and relatively comfortable with PBIS but are less likely to think it is effective.**
- **Mental Health**
  - **In 2026, agreement on items regarding resources related to student mental health stayed consistent or decreased.**

3. Based on the analysis of educational partner input and local data, briefly describe how the LEA will improve the engagement of underrepresented families identified during the self-reflection process in relation to Building Partnerships for Student Outcomes.

BUSD will leverage the existing committees and structures to improve engagement for these families. BUSD has committed resources to ensuring that translation is available and provided for district communications. Advisory panels and new committees have been prescriptive in requiring students and parent members. The LCAP advisory group includes English-learner parents and students as part of the core members attending meetings. Schools also have English learner point persons and Special Education point persons who make it a priority to reach out and involve underrepresented families. The district is also looking to create new positions to improve school-to-home communication through a Public Information Officer and support staff to manage the school's website and communication platforms

Section 3: Seeking Input for Decision-Making

9. Rate the LEA's progress in building the capacity of and supporting principals and staff to effectively engage families in advisory groups and with decision-making.

- **4 – Full Implementation**

10. Rate the LEA's progress in building the capacity of and supporting family members to effectively engage in advisory groups and decision-making.

- **4 – Full Implementation**

11. Rate the LEA's progress in providing all families with opportunities to provide input on policies and programs, and implementing strategies to reach and seek input from any underrepresented groups in the school community.

- **4 – Full Implementation**

12. Rate the LEA's progress in providing opportunities to have families, teachers, principals, and district administrators work together to plan, design, implement and evaluate family engagement activities at school and district levels.

- **4 – Full Implementation**

1. Based on the analysis of educational partner input and local data, briefly describe the LEA's current strengths and progress in Seeking Input for Decision-Making.

All school sites and the District hold the required number of meetings for the English Learner Advisory Committee (ELAC), District English Learner Advisory Council (DELAC), and School Site Council (SSC). Agendas are posted. Minutes are taken. Recent Federal Program Monitoring (FPM) reviews had not found any issues with governance and decision-making procedures.
The District's LCAP is updated annually and goes through a rigorous process to share information and gather input from educational partners. This includes seeking input from teachers, Principals, District Office administrators, classified personnel, the Burbank Teachers Association, the California State Employees Association, parents, and students. The District's website advertises the dates of the meetings and the presentations that contain the content of the meetings, including metrics, action items, and the budgeted expenditures. Electronic invitations are sent to the entire Burbank school community or school communities, including administrators and staff, parents/guardians, and high school students. The general public had access to information from the BUSD website and BUSD eNEWS, which is sent to the general public. All materials presented at the LCAP committee meetings were translated into Spanish and Armenian, including presentations, the budget, and all handouts. Additionally, every General Parent/Community Committee meeting was live-streamed on Zoom. The videos for each meeting were then posted on the district website, along with all the materials (presentations, budget, and handouts). Lastly, the district re-established a Superintendent's Budget Advisory Committee for the 2026-2027 school year with multiple meetings throughout the spring semester to include representation from all educational partners and constituencies.

2. Based on the analysis of educational partner input and local data, briefly describe the LEA's focus area(s) for improvement in Seeking Input for Decision-Making.

Annual surveys are distributed to all parents, students, and families. BUSD staff review the survey results for decision-making. Data is also collected and shared with our educational partners. Parents/ guardians and students who participate in advisory groups serve as a focus group for gathering and soliciting qualitative data about programs and initiatives. Areas of focus are educational technology, emergency communications, bullying, social-emotional learning, and Diversity, Equity, Inclusion, and Belonging.

3. Based on the analysis of educational partner input and local data, briefly describe how the LEA will improve the engagement of underrepresented families identified during the self-reflection process in relation to Seeking Input for Decision-Making.

Parents and District staff partner with one another to build capacity. Schools offer training to parents to understand District and school academic initiatives and to provide parents with opportunities to learn how to support learning in the home, the California School Dashboard, and graduation requirements.
The engagement of underrepresented families is addressed in multiple ways. These ways include specific outreach to families by designated personnel in areas where underrepresented families are concentrated, through surveys at the district, school, and program levels, governance committees, and through site parent meetings.

Priority 6- School Climate:

If the local educational agency administers a local survey to parents/guardians in at least one grade within each grade span that the local educational agency serves (e.g., K-5, 6-8, 9-12), summarize:

The School Satisfaction Survey is administered through a third party to provide BUSD educational partners with anonymity. This survey is designed to analyze and compare trends over time. Therefore, the questions cannot be changed on an annual basis, even though some questions don't accurately reflect the circumstances in which schools' function due to local and state health guidelines and policies. The results below reflect the most recent data obtained from the spring 2026 School Satisfaction Survey.

RESEARCH QUESTIONS

- What are student, parent, staff, and community member perceptions of academic rigor and support, school safety, family engagement, DEI, and college and career readiness?
- In what ways can Burbank improve services and outcomes in these areas?

SURVEY ADMINISTRATION & SURVEY SAMPLE

- The survey was administered online from March to April 2026 using the Qualtrics survey platform.
- The analysis includes a total of n=1708 (2025-26), n=1946 (2024-25), and n=2441 (2023-24) respondents following data cleaning and quality control.
- Results in this analysis are segmented by year and respondent group. Fully segmented results can be found in the accompanying data supplement.

RESPONDENT QUALIFICATIONS

- Must be a student, parent, staff member, or community member at BUSD.

METHODOLOGY

- Sample sizes vary across questions as some questions only pertain to a subset of respondents.
- Conclusions drawn from a small sample size (n<20) should be interpreted with caution.
- Statistically significant differences (at the 95% confidence level) between groups are noted with bracketed letters
- After data collection, data collectors identified and removed low-quality respondents.
- Due to sample size limitations, questions only seen by community members are not included in this analysis. These results may be found in the accompanying Dashboard and Data Supplement.

RESPONDENT CHARACTERISTICS
Group (n=1708)
Student - 51%
Parent/Guardian of a student - 32%
Staff member - 16%
Community member - 1%

Race/Ethnicity (n=1946)
American Indian or Alaska Native - 1%
Black or African American - 4%
Asian - 14%
Hispanic or Latin(o/a/x) - 21%
Middle Eastern or North African - 5%
White - 52%
Native Hawaiian or Pacific Islander - 2%
Not listed/Prefer to self-describe - 13%
Prefer not to respond - 12%

The key findings from the survey were the following:

- LCAP
  - As in prior years, staff respondents are more familiar with BUSD's LCAP than parent respondents are. Close to half of parents (46%) are not at all familiar with BUSD's LCAP, compared to about a quarter of staff members (23%).
  - Overall, agreement with statements about the LCAP is lower this year than in 2025.
- School Environment
  - Overall, respondents in 2026 continue to express favorable opinions about the school environments at BUSD.
- Principal Evaluation
  - In line with prior results, respondents this year express generally positive opinions about school principals.
- District Leadership
  - In contrast, parents and staff members do not have high opinions of district office administrators, and respondents in 2026 have less favorable perceptions than earlier respondents.
- Parent Participation
  - Measures of parent participation continue to be largely positive.
- Professional Development
  - Professional development (PD) provided by district schools remains a potential area for growth.
- Bullying

        - Overall, perceptions of bullying have continued to improve, but respondents still express concern in some areas.
- Positive Behavioral Interventions and Supports (PBIS)
    - As in prior years, school staff are knowledgeable about and relatively comfortable with PBIS but are less likely to think it is effective.
- Mental Health
    - In 2026, agreement on items regarding resources related to student mental health stayed consistent or decreased.
- Career and Technical Education (CTE), Plans After High School, and Overall Satisfaction
    - Student participation in CTE courses increased somewhat from 30% in 2025 to 37% this year, while involvement with NAF Academies decreased slightly from 15% last year to 9% this year. Perceptions of both of these programs remain steady and mostly positive.

Based on analysis of this survey, future work in Burbank Unified School District could include:

- **Conduct a districtwide technology inventory and needs survey to address growing gaps in perceived technology adequacy.**
    - While students increasingly feel their school provides the technology they need (86%, up from 82% in 2025), parent and staff perceptions have declined notably—only 68% now believe schools provide adequate technology for students, down from 82% in 2024. Staff perceptions of technology resources for teachers have also fallen to 63%. To close this gap, the district should launch a formal technology inventory to catalog existing hardware, software, and infrastructure at each school site, paired with a needs survey distributed to staff, parents, and students. This two-pronged approach will pinpoint where shortages are most acute, clarify which resources would have the greatest impact, and provide a data-driven foundation for equitable resource allocation decisions going forward.
- **Develop and disseminate clear guidance for parents about what they should do in the event of an emergency at their child's school and ensure they have access to existing school safety plans.**
    - This year's parent respondents are less likely than past respondents to agree that schools provide clear information on emergency procedures for parents and guardians in the event of a crisis or disaster (2024: 76%, 2025: 77%, 2026: 70%) or make parents aware of the school's safety plan (74%, 74%, 66%) (see slide 49). BUSD may consider updating and redistributing Emergency Response Protocols and Communications and distribute it through multiple channels such as email, the district website, and social media to provide clarity to help parents feel prepared and reduce confusion during difficult situations.
- **Share the positive trends in bullying perceptions with the school community and conduct focus groups with parents across school levels to develop targeted anti-bullying supports.**
    - Agreement on nearly all bullying-related statements improved or held steady this year, satisfaction with anti-bullying programs rose to 62% (up from 37% in 2024), and bullying based on personal characteristics has declined. However, parents remain more concerned than students or staff—65% report that students are bullied (vs. 51% of students and staff), only 51% believe anti-bullying rules are effective (vs. 62% for students and staff), and confidence that schools respond immediately to bullying dropped from 64% to 54%. The district should share these positive trends through infographics, social media, and the district website. BUSD should also consider conducting focus groups with parents at the elementary, middle, and high school levels. These conversations can surface the specific concerns driving parent perceptions at each level and inform the development of targeted anti-bullying strategies, ensuring that supports are tailored to the distinct dynamics of each school environment.

The responses from the survey above will be used to complete the local indicator section at the California Department of Education website for the California School Dashboard. Each component will receive either a color code or a numerical score.

Priority 7- Access to a Broad Course of Study:

1. The locally selected measures or tools used to track the extent to which all students have access to, and are enrolled in, a broad course of study, based on grade spans, unduplicated student groups, and individuals with exceptional needs served.

The Burbank Unified School District (BUSD) employs a range of tools to monitor and support equitable student access to a comprehensive curriculum. Through analysis of data from the student information system, the district tracks enrollment patterns and course availability to ensure broad access across all student groups. In recent years, BUSD has implemented and refined strategic initiatives to expand course offerings and promote student choice. Students may self-select into Honors and Advanced Placement (AP) courses, provided they have earned a minimum grade of C in the prerequisite course. This approach supports open access while maintaining academic readiness. The district continues to invest in robust Music and Career Technical Education (CTE) pathways, including Engineering and Medical programs aligned with the nationally recognized NAF (National Academy Foundation) model. These pathways emphasize real-world learning through internships and hands-on experiences. Dual enrollment opportunities are available at both high schools, enabling students to earn college credit while still in high school. Additionally, BUSD has sustained its participation in K12 Strong Workforce Program grants to strengthen CTE pathways and facilitate transitions to community college programs. Master schedules at school sites are developed with a focus on unduplicated students, ensuring that the needs of English learners, students with disabilities, and other historically underserved groups.

2. A summary of the differences across school sites and student groups having access to, and are enrolled in, a broad course of study, and may include a description of progress over time in the extent to which all students have access to, and are enrolled in, a broad course of study.

Burbank Unified School District (BUSD) continues to prioritize equitable access to academic opportunities and support services for all students. Recent data indicates that the district has emphasized credit recovery for students with disabilities during summer programming to help them stay on track for graduation. The district actively monitors student participation in specialized programs, including Visual and Performing Arts, Dual Enrollment, Career Technical Education (CTE), and Honors and Advanced Placement (AP) courses. Participation by Hispanic/Latinx students is proportional to their overall enrollment, reflecting efforts to ensure inclusive access. While local benchmarks, course grades, and CAASPP data show limited growth in English Language Arts and Mathematics, they also highlight persistent achievement gaps among foster youth, students experiencing homelessness, English Learners, and students with disabilities. These insights inform the district's ongoing efforts to close opportunity gaps. English Learners have access to the full range of district programs, including Honors and AP courses. Reclassified English Learners are thriving and participate broadly across academic offerings. Students with disabilities are included in the core curriculum and are enrolled in higher-level coursework as appropriate. They are represented in CTE pathways and, in some cases, in Honors and AP courses. The majority of students with disabilities are enrolled in general education.

3. Identification of any barriers preventing access to a broad course of study for all students.

Burbank Unified School District (BUSD) recognizes that ensuring equitable access to a broad course of study requires stable and sustainable funding. A key component of this effort has been securing and leveraging grant funding to support and expand Career Technical Education (CTE) pathways. While fluctuations in state revenue have led to periodic adjustments in program scale, the district has successfully maintained long-term program stability through diversified funding sources. Despite these successes, budgetary constraints continue to pose challenges when seeking to expand or enhance programs. In response, BUSD remains committed to strategically reallocating existing resources to address areas of need identified through data analysis and community input. The district has also

prioritized improving A–G completion rates, recognizing this as a critical measure of student access to college-preparatory coursework. Increasing participation in expanded learning opportunities further supports this goal by providing students with additional avenues for academic enrichment and career exploration. By reducing the need for credit recovery, intervention, or grade improvement during the regular school day, BUSD aims to free up student schedules—allowing more students to pursue electives and courses aligned with their interests and post-secondary goals. This approach supports the district's overarching commitment to preparing all students to be college and career ready.

4. Revisions, decisions, or new actions that will be implemented, or has been implemented, to ensure access to a broad course of study for all students.

Burbank Unified School District (BUSD) has been actively monitoring A–G completion rates as a key indicator of college readiness and equitable access to rigorous coursework. In response to identified needs, the district has implemented Professional Learning Community (PLC) structures, formative assessments, and updated grading practices in courses critical to A–G success. A particular focus has been placed on Algebra and other foundational math courses, where targeted efforts have aimed to reduce D and F rates while increasing the number of students meeting the A–G math requirement. These strategies are now being scaled to middle school math departments to build a stronger pipeline of readiness. Collaboration through the PLC process has also expanded to include elementary math instruction, fostering alignment and coherence across grade levels. In addition, BUSD has initiated plans to strengthen PLC collaboration in elementary English Language Arts, with a focus on improving reading proficiency. This includes the adoption and implementation of supplemental curriculum materials designed to support emerging readers. Through these coordinated efforts, BUSD continues to promote equitable access to a broad and rigorous course of study, ensuring that all students are supported in meeting college and career readiness benchmarks.

Fiscal Impact:

There is no upcoming expense related to the California School Dashboard.

Recommendation:

Peter Knapik, Assistant Superintendent of Educational Services and Robyn Anders, Director of Instructional Technology and Accountability, Instructional Services, recommends that the Board of Education approve the Status of All Local Indicators as "Met", as presented.

BUSD LOCAL INDICATORS

2025-2026

2025-2026 BUSD LOCAL INDICATORS

Districtwide Goals Measured

- Students will be career/college ready…
- Students will be physically, emotionally, and mentally healthy…
- Recruit and retain quality employees...
- Efficient and effective operations…

Self-Reflection Scale

1. Exploration and Research Phase
2. Beginning Development
3. Initial Implementation
4. Full Implementation
5. Full Implementation and Sustainability

The current state indicators do not measure several LCFF priority areas. These remaining priority areas are considered local indicators. Districts must do a self-review to determine if they have *Met, Not Met, or Not Met for Two or More Years* each local indicator. Districts will use the local indicators to evaluate and report their progress on priority areas.

PRIORITY 2 – RECENTLY ADOPTED ACADEMIC STANDARDS AND/OR CURRICULUM FRAMEWORKS

	English Language Arts	English Language Development	Math	Science (NGSS)	History Social Studies
Progress in providing professional learning for teaching to the recently adopted academic standards and/or curriculum frameworks identified below.	5	5	5	4	4
Progress in making instructional materials that are aligned to the recently adopted academic standards and/or curriculum frameworks identified below in all classrooms where the subject is taught.	3	5	3	4	4
Progress in implementing policies or programs to support staff in identifying areas where they can improve in delivering instruction aligned to the recently adopted academics standards and/or curriculum frameworks identified below:	4	4	5	4	4

BUSD ELEMENTARY LOCAL ASSESSMENT DATA

Elementary English

- In 2025-2026, 59.9% of Elementary students scored proficient on the most recent Star Reading assessment District Benchmark.
- Preliminary results indicate 55% of Elementary School students scored proficient on the CAASPP (SBAC) Assessment for English Language Arts in spring of 2026
  - This is a decrease of 2% from 24-25 and 1% decrease from 23-24

Elementary Math

- In 2025-2026, 55.3% of Elementary students scored proficient on the end-of-year math District Benchmark assessment.
- Preliminary results indicate 53% of Elementary School students scored proficient on the CAASPP (SBAC) Assessment for Mathematics in spring of 2026
  - This remains the same from 24-25 and a 1% increase from 23-24

BUSD SECONDARY LOCAL ASSESSMENT DATA

Secondary English

- Grades 6 – 8
  - In 2025-2026, 53.7% of Middle School students scored near standard, and 27.7% scored above standard on local reading assessments
  - Preliminary results indicate 58% of Middle School students scored proficient on the CAASPP (SBAC) Assessment for English Language Arts
    - An increase of approximately 1% from 24-25 and an increase of 7% from 23-24
- Grades 9-12
  - 44.54% of High School students scored proficient on the spring District Writing Prompt.
    - A decrease of approximately 2% from 23-24
  - Preliminary results indicate 60% of 11th Grade students scored proficient on the CAASPP (SBAC) Assessment for English Language Arts
    - No change from 24-25 and an increase of 7% from 23-24

Secondary Math

- Grades 6-8
  - In 2025-2026, 61.7% of Middle School students scored proficient on the end-of-year math assessment.
    - An increase of 16% from 24-25.
  - Preliminary results indicate 47% of Middle School students scored proficient on the CAASPP (SBAC) Assessment for Mathematics
    - An increase of approximately 4% from 24-25 and an increase of 10% from 23-24
- Grades 9-12
  - In 2025-2026, 48.3% of High School students scored proficient on the spring Math District Benchmark
    - An increase of approximately 4% since 24-25 and a decrease of 6% from 23-24
  - Preliminary results indicate 38% of 11th Grade students scored proficient on the CAASPP (SBAC) Assessment for English Language Arts
    - An increase of approximately 4% from 24-25 and an increase of 11% from 23-24

BUSD SUPPORT FOR TEACHERS AND ADMINISTRATORS

During the 2024-2025 school year (including summer 2024). Rate the local educational agency's success at engaging in the following activities with teachers and school administrators.

- Identifying the professional learning needs of groups of teachers or staff as a whole
  - Full Implementation
- Identifying the professional learning needs of individual teachers
  - Full Implementation
- Providing support for teachers on the standards, they have not yet mastered.
  - Full Implementation

BUSD Professional Development Offerings

- Arts
- Cross Content
- English Learners
- Elementary
- Secondary
- GATE
- Special Education
- Induction
- Instructional Services Growth and Academic Support

PRIORITY 3 – PARENT & FAMILY ENGAGEMENT

Priority 3 -Parent and Family Engagement:

1. Rate the LEA's progress in developing the capacity of staff (i.e. administrators, teachers, and classified staff) to build trusting and respectful relationships with families.

   4 – Full Implementation

2. Rate the LEA's progress in creating welcoming environments for all families in the community.

   4 – Full Implementation

3. Rate the LEA's progress in supporting staff to learn about each family's strengths, cultures, languages, and goals for their children.

   4 – Full Implementation

4. Rate the LEA's progress in developing multiple opportunities for the LEA and school sites to engage in 2-way communication between families and educators using language that is understandable and accessible to families.

   4 – Full Implementation

PRIORITY 3 – PARENT & FAMILY ENGAGEMENT

Priority 3 -Parent and Family Engagement:

5. Rate the LEA's progress in providing professional learning and support to teachers and principals to improve a school's capacity to partner with families.

   3 – Initial Implementation

6. Rate the LEA's progress in providing families with information and resources to support student learning and development in the home.

   4 – Full Implementation

7. Rate the LEA's progress in implementing policies or programs for teachers to meet with families and students to discuss student progress and ways to work together to support improved student outcomes.

   4 – Full Implementation

8. Rate the LEA's progress in supporting families to understand and exercise their legal rights and advocate for their own students and all students.

   4 – Full Implementation

PRIORITY 3 – PARENT & FAMILY ENGAGEMENT

Priority 3 -Parent and Family Engagement:

9. Rate the LEA's progress in building the capacity of and supporting principals and staff to effectively engage families in advisory groups and with decision-making.

   4 – Full Implementation

10. Rate the LEA's progress in building the capacity of and supporting family members to effectively engage in advisory groups and decision-making.

    4 – Full Implementation

11. Rate the LEA's progress in providing all families with opportunities to provide input on policies and programs, and implementing strategies to reach and seek input from any underrepresented groups in the school community.

    4 – Full Implementation

12. Rate the LEA's progress in providing opportunities to have families, teachers, principals, and district administrators work together to plan, design, implement and evaluate family engagement activities at school and district levels.

    4 – Full Implementation

PRIORITY 6 – SCHOOL CLIMATE

The key findings of commendation from the school satisfaction survey were the following:

- **LCAP**
  - **As in prior years, staff respondents are more familiar with BUSD's LCAP than parent respondents are. Close to half of parents (46%) are not at all familiar with BUSD's LCAP, compared to about a quarter of staff members (23%).**
  - **Overall, agreement with statements about the LCAP is lower this year than in 2025.**
- **School Environment**
  - **Overall, respondents in 2026 continue to express favorable opinions about the school environments at BUSD.**
- **Principal Evaluation**
  - **In line with prior results, respondents this year express generally positive opinions about school principals.**
- **District Leadership**
  - **In contrast, parents and staff members do not have high opinions of district office administrators, and respondents in 2026 have less favorable perceptions than earlier respondents.**
- **Parent Participation**
  - **Measures of parent participation continue to be largely positive.**

PRIORITY 6 – SCHOOL CLIMATE

The key findings of commendation from the school satisfaction survey were the following:

- **Professional Development**
  - **Professional development (PD) provided by district schools remains a potential area for growth.**
- **Bullying**
  - **Overall, perceptions of bullying have continued to improve, but respondents still express concern in some areas.**
- **Positive Behavioral Interventions and Supports (PBIS)**
  - **As in prior years, school staff are knowledgeable about and relatively comfortable with PBIS but are less likely to think it is effective.**
- **Mental Health**
  - **In 2026, agreement on items regarding resources related to student mental health stayed consistent or decreased.**
- **Career and Technical Education (CTE), Plans After High School, and Overall Satisfaction**
  - **Student participation in CTE courses increased somewhat from 30% in 2025 to 37% this year, while involvement with NAF Academies decreased slightly from 15% last year to 9% this year. Perceptions of both of these programs remain steady and mostly positive.**

PRIORITY 6 – SCHOOL CLIMATE

The key recommendation findings from the survey include the following:

- **Conduct a districtwide technology inventory and needs survey to address growing gaps in perceived technology adequacy.**
  - While students increasingly feel their school provides the technology they need (86%, up from 82% in 2025), parent and staff perceptions have declined notably—only 68% now believe schools provide adequate technology for students, down from 82% in 2024. Staff perceptions of technology resources for teachers have also fallen to 63%. To close this gap, the district should launch a formal technology inventory to catalog existing hardware, software, and infrastructure at each school site, paired with a needs survey distributed to staff, parents, and students. This two-pronged approach will pinpoint where shortages are most acute, clarify which resources would have the greatest impact, and provide a data-driven foundation for equitable resource allocation decisions going forward.
- **Develop and disseminate clear guidance for parents about what they should do in the event of an emergency at their child's school and ensure they have access to existing school safety plans.**
  - This year's parent respondents are less likely than past respondents to agree that schools provide clear information on emergency procedures for parents and guardians in the event of a crisis or disaster (2024: 76%, 2025: 77%, 2026: 70%) or make parents aware of the school's safety plan (74%, 74%, 66%) (see slide 49). BUSD may consider updating and redistributing Emergency Response Protocols and Communications and distribute it through multiple channels such as email, the district website, and social media to provide clarity to help parents feel prepared and reduce confusion during difficult situations.
- **Share the positive trends in bullying perceptions with the school community and conduct focus groups with parents across school levels to develop targeted anti-bullying supports.**
  - Agreement on nearly all bullying-related statements improved or held steady this year, satisfaction with anti-bullying programs rose to 62% (up from 37% in 2024), and bullying based on personal characteristics has declined. However, parents remain more concerned than students or staff—65% report that students are bullied (vs. 51% of students and staff), only 51% believe anti-bullying rules are effective (vs. 62% for students and staff), and confidence that schools respond immediately to bullying dropped from 64% to 54%. The district should share these positive trends through infographics, social media, and the district website. BUSD should also consider conducting focus groups with parents at the elementary, middle, and high school levels. These conversations can surface the specific concerns driving parent perceptions at each level and inform the development of targeted anti-bullying strategies, ensuring that supports are tailored to the distinct dynamics of each school environment.

Burbank Unified School District
Instructional Services

REPORT TO THE BOARD

TO: Members of the Board of Education

FROM: Peter Knapik, Assistant Superintendent of Educational Services
Robyn Anders, Director of Instructional Technology & Accountability

PREPARED BY: Robyn Anders, Director of Instructional Technology & Accountability

SUBMITTED BY: Glenda Nolasco Diaz, Administrative Secretary

DATE: June 25, 2026

SUBJECT: Approval of Title I Schoolwide Program (SWP) Status for Ralph Emerson Elementary School

---

Background:

Title I, Part A of the Elementary and Secondary Education Act (ESEA) provides federal funding to support students most at risk of not meeting state academic standards. Schools receiving Title I funds may operate either a Targeted Assistance School (TAS) program or a Schoolwide Program (SWP).

A Schoolwide Program is a comprehensive reform strategy designed to upgrade the entire educational program of a school to improve outcomes for all students, particularly the lowest-achieving students.

Federal and state guidance requires that each school transitioning to a Schoolwide Program (SWP):

- Conduct a comprehensive needs assessment
- Develop a Schoolwide Plan aligned to the SPSA
- Obtain local governing board approval of the SWP plan

District-Wide Goals for 2025-2026:

1. Students will be career/college ready via high-quality instruction.
2. Students will be physically, emotionally, and mentally healthy.
3. Recruit and retain highly qualified employees.
4. Maintain Efficient and effective operations.

Discussion/Issues:

Ralph Emerson Elementary School meets the eligibility criteria to operate a Schoolwide Program, with at least 40% of students identified as low income. Ralph Emerson Elementary had a 41.2% Free/Reduced Lunch rate based on CALPADs Fall 1 Reporting from CBEDS day.

District and school staff have completed all required steps for implementation:

- Conducted a comprehensive needs assessment
- Engaged stakeholders including School Site Council (SSC), staff, and families
- Developed a Schoolwide Plan incorporated into the School Plan for Student Achievement (SPSA)
- Aligned strategies with Local Control Accountability Plan (LCAP) goals

Operating as a Schoolwide Program will allow the school to:

- Consolidate federal, state, and local funds
- Provide services to all students rather than only identified students
- Increase flexibility in addressing academic and support needs schoolwide

Fiscal Impact:
There is no additional fiscal impact. Title I funds will continue to be allocated to the school and used in accordance with federal guidelines and current district allocation parameters.

Recommendation:
Peter Knapik, Assistant Superintendent of Educational Services, and Robyn Anders, Director of Instructional Technology & Accountability, recommend that the Board of Education approve the designation of Ralph Emerson Elementary School as a Title I Schoolwide Program (SWP) school and approve the associated Schoolwide Plan, effective July 1, 2026, as presented.

School Year: **2026-27**

School Plan for Student Achievement (SPSA)

School Name	County-District-School (CDS) Code	Schoolsite Council (SSC) Approval Date	Local Board Approval Date
Ralph Emerson Elementary School	19- 64337- 6011894	May 26, 2026	June 25, 2026

The School Plan for Student Achievement (SPSA) is a strategic plan that maximizes the resources available to the school while minimizing duplication of effort with the ultimate goal of increasing student achievement. SPSA development should be aligned with and inform the Local Control and Accountability Plan (LCAP) process.

This SPSA template consolidates all school-level planning efforts into one plan for programs funded through the Consolidated Application (ConApp), and for federal Additional Targeted Support and Improvement (ATSI), pursuant to California Education Code (EC) Section 64001 and the Elementary and Secondary Education Act (ESEA) as amended by the Every Student Succeeds Act (ESSA). This template is designed to meet schoolwide program planning requirements for both the SPSA and federal ATSI planning requirements.

California's ESSA State Plan supports the state's approach to improving student group performance through the utilization of federal resources. Schools use the SPSA to document their approach to maximizing the impact of federal investments in support of underserved students. The implementation of ESSA in California presents an opportunity for schools to innovate with their federally-funded programs and align them with the priority goals of the school and the local educational agency (LEA) that are being realized under the state's Local Control Funding Formula (LCFF).

The LCFF provides schools and LEAs flexibility to design programs and provide services that meet the needs of students in order to achieve readiness for college, career, and lifelong learning. The SPSA planning process supports continuous cycles of action, reflection, and improvement. Consistent with EC 64001(g)(1), the Schoolsite Council (SSC) is required to develop and annually review the SPSA, establish an annual budget, and make modifications to the plan that reflect changing needs and priorities, as applicable.

This plan is being used by Ralph Emerson Elementary School for meeting the following ESSA planning requirements in alignment with the LCAP and other federal, state, and local programs:

Schoolwide Program

Ralph Emerson Elementary School – Burbank Unified School District
The TAS model has constrained Emerson's ability to address schoolwide instructional gaps and provide early, preventative support for all students. This year we wish to move to a Schoolwide Program Model.
1. Limitations of the Targeted Assistance (TAS) Model at Emerson
Under the Targeted Assistance model, Ralph Emerson Elementary has worked to support identified students through intervention; however, several limitations have impacted our ability to fully close achievement gaps:

- Restricted access to services: Only students who met Title I eligibility criteria received supplemental support, leaving many "bubble students" without needed intervention despite demonstrating emerging gaps.
- Limited impact on core (Tier 1) instruction: Title I resources could not be fully leveraged to strengthen universal classroom practices across all grade levels.

- Reactive vs. preventive system: Students typically received support only after demonstrating significant academic struggle rather than benefiting from early, schoolwide prevention.

2. Vision for Emerson's Schoolwide Program (SWP)
Transitioning to a Schoolwide Program allows Emerson Elementary to shift to a proactive, cohesive system of support that addresses root causes of student underperformance.
Key elements of the Emerson Schoolwide vision include:

- Strong, consistent Tier 1 instruction across all classrooms, particularly in foundational literacy and mathematics
- Full implementation of MTSS, integrating academic and social-emotional supports
- Data-driven decision-making cycles through Instructional Rounds and grade-level collaboration
- Focus on closing equity gaps, especially for English learners, students with foundational skill gaps, and historically underperforming groups

At Ralph Emerson Elementary, the Schoolwide Program will ensure that every student receives high-quality Tier 1 instruction supported by a comprehensive, data-driven system of intervention, addressing root causes of underachievement and promoting equitable outcomes for all learners.
3. Protection of Vulnerable Students (Former TAS-Eligible Students)
Emerson Elementary will ensure that students who would have qualified for Targeted Assistance continue to receive intensive and prioritized support through a strengthened MTSS framework:

- Universal screenings using district assessments to identify at-risk students early
- Tier 2 and Tier 3 intervention pushed into classrooms, ensuring no loss of core instruction
- Frequent progress monitoring for students receiving intervention
- Designated intervention staff and shared responsibility among teachers for monitoring high-need students
- Regular data meetings (Communities of Practice/Instructional Rounds) to review progress and adjust supports

Students who previously qualified for TAS will continue to receive targeted, data-driven interventions within a structured MTSS system, ensuring no reduction in services and improved coordination across all instructional levels.

4. Resource Allocation Benefits at Emerson
The Schoolwide model allows Emerson Elementary to use Title I resources more flexibly to strengthen the entire instructional program.
New opportunities include:

- Instructional coaching and teacher support to improve Tier 1 instructional practices
- Professional development in:
- Structured literacy and foundational reading skills

Tier 1 Math Instruction

- Differentiation and small-group instruction
- Data analysis and progress monitoring

Supporting ELs and SPED students in the Gen Ed classroom

- High-quality instructional materials and assessments aligned to state standards
- Expanded intervention programs within the classroom setting (push-in support)
- Extended learning opportunities (before/after school support, enrichment opportunities)
- Collaborative planning time for teachers to align instruction and analyze student data

Schoolwide flexibility allows Emerson to invest in high-impact strategies that strengthen core instruction while also intensifying support for our most at-risk students.

Under the Targeted Assistance model, Ralph Emerson Elementary was limited in its ability to

address systemic instructional gaps, as services were restricted to identified students. Transitioning to a Schoolwide Program enables the school to strengthen Tier 1 instruction, implement a cohesive MTSS framework, and use resources more flexibly to support all students. This shift ensures that the needs of the lowest-performing students remain a priority while also addressing root causes identified in the Comprehensive Needs Assessment. The SPSA goals are aligned with Burbank USD LCAP priorities and focus on improving academic outcomes, promoting equity, and increasing student success across all grade levels.

Alignment to Burbank USD LCAP Priorities
Emerson's SPSA aligns with district priorities by:

- Improving academic achievement through stronger Tier 1 instruction
- Promoting equity by closing achievement gaps for at-risk student groups
- Enhancing student engagement through inclusive and differentiated teaching practices

Root Cause 1: Inconsistent implementation of foundational literacy instruction across classrooms

- SPSA Goal: Increase the percentage of students meeting or exceeding grade-level benchmarks in ELA

Root Cause 2: Inconsistent implementation in development of math conceptual understanding

- SPSA Goal: Increase the percentage of students meeting or exceeding grade-level benchmarks in Math

Root Cause 3: Inconsistent use of assessment data to guide instruction

- SPSA Goal: Strengthen data-driven instructional practices schoolwide

Schoolwide Strategies for Emerson
Strategy 1: Strengthen Tier 1 Literacy/Math Instruction

- Increase Understanding of ELA and Mathematics Framework
- Increase use of structured literacy/math practices
- Provide coaching and modeling for teachers

Strategy 2: Implement Systematic MTSS Structures

- Use flexible grouping based on ongoing data
- Provide push-in and targeted small-group instruction

Strategy 3: Build Data-Driven Instructional Practices

- Conduct regular data cycles (every 6–8 weeks)
- Use common assessments to monitor progress
- Train staff on data analysis and instructional response

Strategy 4: Provide Targeted Professional Development

- Focus on differentiation, scaffolding, and engagement strategies
- Align PD with identified instructional gaps and student needs

This template is based on the December, 2023 CDE revision of the School Plan for Student Achievement. Some modifications have been made to inform the SPSA development process.

Table of Contents

SPSA Title Page 1
Table of Contents....4
Plan Description....6
Educational Partner Involvement....8
Resource Inequities....8
Comprehensive Needs Assessment Components....8
- California School Dashboard (Dashboard) Indicators....9
- Other Needs....9

School and Student Performance Data....10
- Student Enrollment....10
- CAASPP Results....12
- ELPAC Results....16
- Student Population....19
- Overall Performance....21
- Academic Performance....23
- Academic Engagement....31
- Conditions & Climate....34

Goals, Strategies, & Proposed Expenditures....36
- Goal 1....36
- Goal 2....40
- Goal 3....44
- Goal 4....46
- Goal 5....49

Budget Summary....52
- Budget Summary....52
- Other Federal, State, and Local Funds....52

Budgeted Funds and Expenditures in this Plan....53
- Funds Budgeted to the School by Funding Source....53
- Expenditures by Funding Source....53
- Expenditures by Budget Reference....53
- Expenditures by Budget Reference and Funding Source....53
- Expenditures by Goal....54

School Site Council Membership....55
Recommendations and Assurances....56
Instructions....57
Appendix A: Plan Requirements....64

Appendix B: Plan Requirements for School to CSI/ATSI Planning Requirements 67
Appendix C: Select State and Federal Programs 70

Plan Description

Briefly describe your school's plan for effectively meeting ESSA's planning requirements in alignment with the Local Control and Accountability Plan (LCAP) and other federal, state, and local programs.

This plan is being used by Ralph Emerson Elementary School for meeting the following ESSA planning requirements in alignment with the LCAP and other federal, state, and local programs:

Schoolwide Program

Ralph Emerson Elementary School – Burbank Unified School District

The TAS model has constrained Emerson's ability to address schoolwide instructional gaps and provide early, preventative support for all students. This year we wish to move to a Schoolwide Program Model.

1. Limitations of the Targeted Assistance (TAS) Model at Emerson

Under the Targeted Assistance model, Ralph Emerson Elementary has worked to support identified students through intervention; however, several limitations have impacted our ability to fully close achievement gaps:

- Restricted access to services: Only students who met Title I eligibility criteria received supplemental support, leaving many "bubble students" without needed intervention despite demonstrating emerging gaps.
- Limited impact on core (Tier 1) instruction: Title I resources could not be fully leveraged to strengthen universal classroom practices across all grade levels.
- Reactive vs. preventive system: Students typically received support only after demonstrating significant academic struggle rather than benefiting from early, schoolwide prevention.

2. Vision for Emerson's Schoolwide Program (SWP)

Transitioning to a Schoolwide Program allows Emerson Elementary to shift to a proactive, cohesive system of support that addresses root causes of student underperformance.

Key elements of the Emerson Schoolwide vision include:

- Strong, consistent Tier 1 instruction across all classrooms, particularly in foundational literacy and mathematics
- Full implementation of MTSS, integrating academic and social-emotional supports
- Data-driven decision-making cycles through Instructional Rounds and grade-level collaboration
- Focus on closing equity gaps, especially for English learners, students with foundational skill gaps, and historically underperforming groups

At Ralph Emerson Elementary, the Schoolwide Program will ensure that every student receives high-quality Tier 1 instruction supported by a comprehensive, data-driven system of intervention, addressing root causes of underachievement and promoting equitable outcomes for all learners.

3. Protection of Vulnerable Students (Former TAS-Eligible Students)

Emerson Elementary will ensure that students who would have qualified for Targeted Assistance continue to receive intensive and prioritized support through a strengthened MTSS framework:

- Universal screenings using district assessments to identify at-risk students early
- Tier 2 and Tier 3 intervention pushed into classrooms, ensuring no loss of core instruction
- Frequent progress monitoring for students receiving intervention
- Designated intervention staff and shared responsibility among teachers for monitoring high-need students
- Regular data meetings (Communities of Practice/Instructional Rounds) to review progress and adjust supports

Students who previously qualified for TAS will continue to receive targeted, data-driven interventions within a structured MTSS system, ensuring no reduction in services and improved

coordination across all instructional levels.

4. Resource Allocation Benefits at Emerson
The Schoolwide model allows Emerson Elementary to use Title I resources more flexibly to strengthen the entire instructional program.
New opportunities include:

- Instructional coaching and teacher support to improve Tier 1 instructional practices
- Professional development in:
- Structured literacy and foundational reading skills

Tier 1 Math Instruction

- Differentiation and small-group instruction
- Data analysis and progress monitoring

Supporting ELs and SPED students in the Gen Ed classroom

- High-quality instructional materials and assessments aligned to state standards
- Expanded intervention programs within the classroom setting (push-in support)
- Extended learning opportunities (before/after school support, enrichment opportunities)
- Collaborative planning time for teachers to align instruction and analyze student data

Schoolwide flexibility allows Emerson to invest in high-impact strategies that strengthen core instruction while also intensifying support for our most at-risk students.

Under the Targeted Assistance model, Ralph Emerson Elementary was limited in its ability to address systemic instructional gaps, as services were restricted to identified students. Transitioning to a Schoolwide Program enables the school to strengthen Tier 1 instruction, implement a cohesive MTSS framework, and use resources more flexibly to support all students. This shift ensures that the needs of the lowest-performing students remain a priority while also addressing root causes identified in the Comprehensive Needs Assessment. The SPSA goals are aligned with Burbank USD LCAP priorities and focus on improving academic outcomes, promoting equity, and increasing student success across all grade levels.

Alignment to Burbank USD LCAP Priorities
Emerson's SPSA aligns with district priorities by:

- Improving academic achievement through stronger Tier 1 instruction
- Promoting equity by closing achievement gaps for at-risk student groups
- Enhancing student engagement through inclusive and differentiated teaching practices

Root Cause 1: Inconsistent implementation of foundational literacy instruction across classrooms

- SPSA Goal: Increase the percentage of students meeting or exceeding grade-level benchmarks in ELA

Root Cause 2: Inconsistent implementation in development of math conceptual understanding

- SPSA Goal: Increase the percentage of students meeting or exceeding grade-level benchmarks in Math

Root Cause 3: Inconsistent use of assessment data to guide instruction

- SPSA Goal: Strengthen data-driven instructional practices schoolwide

Schoolwide Strategies for Emerson
Strategy 1: Strengthen Tier 1 Literacy/Math Instruction

- Increase Understanding of ELA and Mathematics Framework
- Increase use of structured literacy/math practices
- Provide coaching and modeling for teachers

Strategy 2: Implement Systematic MTSS Structures

- Use flexible grouping based on ongoing data

- Provide push-in and targeted small-group instruction

Strategy 3: Build Data-Driven Instructional Practices

- Conduct regular data cycles (every 6–8 weeks)
- Use common assessments to monitor progress
- Train staff on data analysis and instructional response

Strategy 4: Provide Targeted Professional Development

- Focus on differentiation, scaffolding, and engagement strategies
- Align PD with identified instructional gaps and student needs

- Emerson Elementary School did qualify for Title I Targeted Assistance for the year 2025-26 and 2026-27
  - School plans aligned to LCAP goals for Reading/Language Arts and Mathematics
- School accountability aligned to LCAP accountability (Dashboard), including SBAC results in Reading/Language Arts and Mathematics
- Federally funded programs are aligned to the requirements of each of those programs
- CSI, TSI, and ATSI requirements will be followed as schools are identified for support and intervention (new program improvement)
- Parent involvement and engagement are a priority of the district
- Professional development of certificated and classified staff is based on the needs of students and staff to increase student achievement
- The School Site Council performs development and monitoring of the school plan activities and expenditures

Educational Partner Involvement

How, when, and with whom did Ralph Emerson Elementary School consult as part of the planning process for this SPSA/Annual Review and Update?

Involvement Process for the SPSA and Annual Review and Update

The principal has shared CAASPP data and reviewed SPSA goals with Emerson School Site Council on May 26, 2026. The School Site Council helped to complete the Compehensive needs assessment to move to a Schoolwide Title 1 Model. The 2026 SPSA will be shared with the staff and ELAC in August 2026. In addition, the draft of the SPSA for 2026 will be sent out after review of staff, ELAC, and 2026-7 School Site Council in September 2026.

Resource Inequities

Briefly identify and describe any resource inequities identified as a result of the required needs assessment, as applicable.

This section is required for all schools eligible for ATSI and CSI.

Emerson is not an ATSI or CSI school.

No resource inequities have been identified due to the required needs assessment.

All funds are distributed on a per-pupil basis to all schools.

All schools are staffed using the same formula.

Comprehensive Needs Assessment Components

Identify and describe any areas that need significant improvement based on a review of Dashboard and local data, including any areas of low performance and significant performance gaps among student groups on Dashboard indicators, and any steps taken to address those areas.

California School Dashboard (Dashboard) Indicators

Referring to the California School Dashboard (Dashboard), any state indicator for which overall performance was in the "Red" or "Orange" performance category.

Referring to the California School Dashboard (Dashboard), any state indicator for which performance for any student group was two or more performance levels below the "all student" performance.

Other Needs

In addition to Dashboard data, other needs may be identified using locally collected data developed by the LEA to measure pupil outcomes.

Emerson identifies needs in the ELA and Math performance for English Learners and Socioeconomically Disadvantaged students.

School and Student Performance Data

Student Enrollment

This report displays the annual K-12 public school enrollment by student ethnicity and grade level for Ralph Emerson Elementary School. Annual enrollment consists of the number of students enrolled on Census Day (the first Wednesday in October). This information was submitted to the CDE as part of the annual Fall 1 data submission in the California Longitudinal Pupil Achievement Data System (CALPADS).

Enrollment By Student Group

Student Enrollment by Subgroup						
Student Group	Percent of Enrollment			Number of Students		
	23-24	24-25	25-26	23-24	24-25	25-26
African American	1.85%	1.28%	1.35%	10	7	7
Asian	5.93%	6.75%	5.78%	32	37	30
Filipino	1.85%	2.19%	2.70%	10	12	14
Hispanic/Latino	15.93%	15.51%	15.41%	86	85	80
White	62.41%	62.59%	64.93%	337	343	337
Two or More Races	4.81%	4.74%	5.20%	26	26	27
Not Reported	7.22%	6.93%	4.62%	39	38	24
			Total Enrollment	540	548	519

Enrollment By Grade Level

Student Enrollment by Grade Level			
Grade	Number of Students		
	23-24	24-25	25-26
Transitional Kindergarten		22	39
Kindergarten	61	72	49
Grade 1	73	70	75
Grade 2	98	73	70
Grade3	94	119	75
Grade 4	96	95	112
Grade 5	96	97	99
Total Enrollment	540	548	519

Conclusions based on this data:

1. Emerson's overall enrollment his declining overall and reduced by 29 students from 2024-26 to 2025-26.
2. Grades K-3 are seing the most decline with steadier numbers in grades 4 and 5.
3. The White subgroup remains the largest in numbers consistently.

School and Student Performance Data

English Learner (EL) Enrollment

This report displays the annual K-12 public school enrollment by English Language Acquisition Status (ELAS). This information was submitted to the CDE as part of the annual Fall 1 data submission in the California Longitudinal Pupil Achievement Data System (CALPADS).

English Learner (EL) Enrollment						
Student Group	Number of Students			Percent of Students		
	23-24	24-25	25-26	23-24	24-25	25-26
English Learners	123	146	131	22.8%	26.6%	25.2%
Fluent English Proficient (FEP)	56	53	58	10.4%	9.7%	11.2%

Conclusions based on this data:

1. About one fourth of Emerson's student population included students which are English Learners. (123 ELs/540 All students)
2. The percent of FEP and RFEP students has only a 10% difference.
3. RFEP data has not been reported by the CDE for the last two yaears.

School and Student Performance Data

CAASPP Results
English Language Arts/Literacy (All Students)

The Smarter Balanced Summative Assessments for ELA and mathematics are an annual measure of what students know and can do using the Common Core State Standards for English language arts/literacy and mathematics.

The purpose of the Smarter Balanced Summative Assessments is to assess student knowledge and skills for English language arts/literacy (ELA) and mathematics, as well as how much students have improved since the previous year. These measures help identify and address gaps in knowledge or skills early so students get the support they need for success in higher grades and for college and career readiness.

All students in grades three through eight and grade eleven take the Smarter Balanced Summative Assessments unless a student's active individualized education program (IEP) designates the California Alternate Assessments.

Visit the California Department of Education's Smarter Balanced Assessment System web page for more information.

Overall Participation for All Students												
Grade Level	# of Students Enrolled			# of Students Tested			# of Students with Scores			% of Enrolled Students Tested		
	22-23	23-24	24-25	22-23	23-24	24-25	22-23	23-24	24-25	22-23	23-24	24-25
Grade 3	97	97	115	95	88	112	95	88	112	97.9	90.7	97.4
Grade 4	96	96	97	94	95	94	94	95	94	97.9	99	96.9
Grade 5	98	98	97	95	95	97	95	95	97	96.9	96.9	100
All Grades	291	291	309	284	278	303	284	278	303	97.6	95.5	98.1

The "% of Enrolled Students Tested" showing in this table is not the same as "Participation Rate" for federal accountability purposes.

Overall Achievement for All Students															
Grade Level	Mean Scale Score			% Standard Exceeded			% Standard Met			% Standard Nearly Met			% Standard Not Met		
	22-23	23-24	24-25	22-23	23-24	24-25	22-23	23-24	24-25	22-23	23-24	24-25	22-23	23-24	24-25
Grade 3	2419.	2420.	2413.	20.00	23.86	22.32	25.26	25.00	15.18	28.42	19.32	30.36	26.32	31.82	32.14
Grade 4	2489.	2474.	2461.	32.98	32.63	25.53	28.72	21.05	23.40	19.15	21.05	21.28	19.15	25.26	29.79
Grade 5	2518.	2512.	2512.	30.53	24.21	28.87	28.42	38.95	25.77	22.11	15.79	17.53	18.95	21.05	27.84
All Grades	N/A	N/A	N/A	27.82	26.98	25.41	27.46	28.42	21.12	23.24	18.71	23.43	21.48	25.90	30.03

Reading Demonstrating understanding of literary and non-fictional texts									
Grade Level	% Above Standard			% At or Near Standard			% Below Standard		
	22-23	23-24	24-25	22-23	23-24	24-25	22-23	23-24	24-25
Grade 3	17.89	18.18	11.61	63.16	61.36	66.96	18.95	20.45	21.43
Grade 4	26.60	26.32	20.21	63.83	58.95	65.96	9.57	14.74	13.83
Grade 5	21.05	23.16	18.56	65.26	61.05	64.95	13.68	15.79	16.49
All Grades	21.83	22.66	16.50	64.08	60.43	66.01	14.08	16.91	17.49

Writing Producing clear and purposeful writing									
Grade Level	% Above Standard			% At or Near Standard			% Below Standard		
	22-23	23-24	24-25	22-23	23-24	24-25	22-23	23-24	24-25
Grade 3	15.79	18.18	12.50	53.68	53.41	58.93	30.53	28.41	28.57
Grade 4	22.34	17.89	18.09	58.51	57.89	53.19	19.15	24.21	28.72
Grade 5	24.21	16.84	27.84	57.89	65.26	50.52	17.89	17.89	21.65
All Grades	20.77	17.63	19.14	56.69	58.99	54.46	22.54	23.38	26.40

Listening Demonstrating effective communication skills									
Grade Level	% Above Standard			% At or Near Standard			% Below Standard		
	22-23	23-24	24-25	22-23	23-24	24-25	22-23	23-24	24-25
Grade 3	13.68	6.82	9.82	71.58	76.14	76.79	14.74	17.05	13.39
Grade 4	13.83	13.68	10.64	71.28	70.53	67.02	14.89	15.79	22.34
Grade 5	11.58	18.95	16.49	83.16	69.47	72.16	5.26	11.58	11.34
All Grades	13.03	13.31	12.21	75.35	71.94	72.28	11.62	14.75	15.51

Research/Inquiry Investigating, analyzing, and presenting information									
Grade Level	% Above Standard			% At or Near Standard			% Below Standard		
	22-23	23-24	24-25	22-23	23-24	24-25	22-23	23-24	24-25
Grade 3	17.89	12.50	15.18	63.16	70.45	58.93	18.95	17.05	25.89
Grade 4	22.34	13.68	19.15	63.83	69.47	62.77	13.83	16.84	18.09
Grade 5	22.11	17.89	14.43	62.11	69.47	67.01	15.79	12.63	18.56
All Grades	20.77	14.75	16.17	63.03	69.78	62.71	16.20	15.47	21.12

Conclusions based on this data:

1. Lessons need to focus on comprehending both literary and non-fictional texts across the grade levels. 16.91% below standard.
2. Research/inquiry is an area which students below grade level need more support with. 15.47% below standard.
3. Investigating, analyzing and presenting information are skills students need to master while using both literary and non-fictional texts and be able to communicate the findings.

School and Student Performance Data

CAASPP Results
Mathematics (All Students)

The Smarter Balanced Summative Assessments for ELA and mathematics are an annual measure of what students know and can do using the Common Core State Standards for English language arts/literacy and mathematics.

The purpose of the Smarter Balanced Summative Assessments is to assess student knowledge and skills for English language arts/literacy (ELA) and mathematics, as well as how much students have improved since the previous year. These measures help identify and address gaps in knowledge or skills early so students get the support they need for success in higher grades and for college and career readiness.

All students in grades three through eight and grade eleven take the Smarter Balanced Summative Assessments unless a student's active individualized education program (IEP) designates the California Alternate Assessments.

Visit the California Department of Education's Smarter Balanced Assessment System web page for more information.

Overall Participation for All Students												
Grade Level	# of Students Enrolled			# of Students Tested			# of Students with Scores			% of Enrolled Students Tested		
	22-23	23-24	24-25	22-23	23-24	24-25	22-23	23-24	24-25	22-23	23-24	24-25
Grade 3	97	97	115	97	93	115	97	93	115	100.0	95.9	100
Grade 4	96	96	97	95	95	95	95	95	95	99.0	99	97.9
Grade 5	98	98	97	96	97	97	96	97	97	98.0	99	100
All Grades	291	291	309	288	285	307	288	285	307	99.0	97.9	99.4

* The "% of Enrolled Students Tested" showing in this table is not the same as "Participation Rate" for federal accountability purposes.

Overall Achievement for All Students															
Grade Level	Mean Scale Score			% Standard Exceeded			% Standard Met			% Standard Nearly Met			% Standard Not Met		
	22-23	23-24	24-25	22-23	23-24	24-25	22-23	23-24	24-25	22-23	23-24	24-25	22-23	23-24	24-25
Grade 3	2428.	2436.	2424.	11.34	22.58	19.13	36.08	25.81	29.57	28.87	24.73	25.22	23.71	26.88	26.09
Grade 4	2500.	2489.	2487.	30.53	28.42	25.26	27.37	24.21	29.47	30.53	27.37	24.21	11.58	20.00	21.05
Grade 5	2526.	2510.	2510.	31.25	23.71	28.87	20.83	20.62	18.56	22.92	26.80	25.77	25.00	28.87	26.80
Grade 11															
All Grades	N/A	N/A	N/A	24.31	24.91	24.10	28.13	23.51	26.06	27.43	26.32	25.08	20.14	25.26	24.76

Concepts & Procedures Applying mathematical concepts and procedures									
Grade Level	% Above Standard			% At or Near Standard			% Below Standard		
	22-23	23-24	24-25	22-23	23-24	24-25	22-23	23-24	24-25
Grade 3	16.49	23.66	23.48	63.92	51.61	50.43	19.59	24.73	26.09
Grade 4	32.63	28.42	26.32	53.68	49.47	55.79	13.68	22.11	17.89
Grade 5	29.17	20.62	25.77	45.83	50.52	43.30	25.00	28.87	30.93
Grade 11									
All Grades	26.04	24.21	25.08	54.51	50.53	49.84	19.44	25.26	25.08

Problem Solving & Modeling/Data Analysis Using appropriate tools and strategies to solve real world and mathematical problems									
Grade Level	% Above Standard			% At or Near Standard			% Below Standard		
	22-23	23-24	24-25	22-23	23-24	24-25	22-23	23-24	24-25
Grade 3	22.68	26.88	18.26	57.73	45.16	55.65	19.59	27.96	26.09
Grade 4	34.74	31.58	27.37	43.16	44.21	46.32	22.11	24.21	26.32
Grade 5	27.08	21.65	26.80	44.79	48.45	52.58	28.13	29.90	20.62
All Grades	28.13	26.67	23.78	48.61	45.96	51.79	23.26	27.37	24.43

Communicating Reasoning Demonstrating ability to support mathematical conclusions									
Grade Level	% Above Standard			% At or Near Standard			% Below Standard		
	22-23	23-24	24-25	22-23	23-24	24-25	22-23	23-24	24-25
Grade 3	22.68	25.81	23.48	59.79	58.06	56.52	17.53	16.13	20.00
Grade 4	32.63	29.47	23.16	53.68	51.58	56.84	13.68	18.95	20.00
Grade 5	18.75	19.59	17.53	65.63	68.04	60.82	15.63	12.37	21.65
All Grades	24.65	24.91	21.50	59.72	59.30	57.98	15.63	15.79	20.52

Conclusions based on this data:

1. Based on students below standard, the area of problem solving and modeling/data analysis needs to be focused on deeper understanding with concepts and procedures following closely behind.
2. Students need further exposure to testing format in addition to practicing the completion of performance tasks in the areas of mathematics to practice utilizing concepts & procedures, analyzing the data, and communicating reasoning.
3. Academic language/vocabulary in the area of mathematics continues to be a focus area at all grade levels.

School and Student Performance Data

The English Language Proficiency Assessments for California (ELPAC) system is used to determine and monitor the progress of the English language proficiency for students whose primary language is not English. The ELPAC is aligned with the 2012 California English Language Development Standards and assesses four domains: listening, speaking, reading, and writing.

Visit the California Department of Education's English Language Proficiency Assessments for California (ELPAC) web page or the ELPAC.org website for more information about the ELPAC.

ELPAC Results

ELPAC Summative Assessment Data Number of Students and Mean Scale Scores for All Students												
Grade Level	Overall			Oral Language			Written Language			Number of Students Tested		
	22-23	23-24	24-25	22-23	23-24	24-25	22-23	23-24	24-25	22-23	23-24	24-25
K	1410.0	1434.8	1423.5	1410.1	1433.3	1424.2	1409.8	1438.5	1421.4	36	19	21
1	1433.5	1435.5	1434.3	1446.7	1443.8	1445.4	1419.7	1426.6	1422.6	30	27	18
2	1455.0	1468.6	1472.9	1440.1	1476.8	1475.4	1469.3	1460.1	1470.0	21	32	28
3	1487.8	1480.8	1483.5	1480.6	1471.8	1481.3	1494.5	1489.4	1485.2	17	24	36
4	1498.7	1495.8	1515.0	1486.1	1496.4	1513.2	1510.9	1494.6	1516.2	13	16	21
5	1543.2	1529.4	1540.0	1526.6	1514.0	1540.9	1559.2	1544.5	1538.7	22	13	15
All Grades										139	131	139

Overall Language Percentage of Students at Each Performance Level for All Students															
Grade Level	Level 4			Level 3			Level 2			Level 1			Total Number of Students		
	22-23	23-24	24-25	22-23	23-24	24-25	22-23	23-24	24-25	22-23	23-24	24-25	22-23	23-24	24-25
K	16.67	26.32	14.29	27.78	26.32	47.62	38.89	15.79	28.57	16.67	31.58	9.52	36	19	21
1	3.33	7.41	0.00	30.00	40.74	38.89	43.33	29.63	33.33	23.33	22.22	27.78	30	27	18
2	9.52	12.50	7.14	28.57	37.50	53.57	42.86	34.38	21.43	19.05	15.63	17.86	21	32	28
3	17.65	8.33	11.11	29.41	41.67	25.00	29.41	29.17	44.44	23.53	20.83	19.44	17	24	36
4	15.38	18.75	28.57	53.85	37.50	28.57	15.38	18.75	28.57	15.38	25.00	14.29	13	16	21
5	27.27	15.38	26.67	36.36	61.54	46.67	31.82	7.69	20.00	4.55	15.38	6.67	22	13	15
All Grades	14.39	13.74	13.67	32.37	39.69	38.85	35.97	25.19	30.94	17.27	21.37	16.55	139	131	139

Oral Language Percentage of Students at Each Performance Level for All Students															
Grade Level	Level 4			Level 3			Level 2			Level 1			Total Number of Students		
	22-23	23-24	24-25	22-23	23-24	24-25	22-23	23-24	24-25	22-23	23-24	24-25	22-23	23-24	24-25
K	16.67	36.84	19.05	33.33	15.79	33.33	27.78	15.79	38.10	22.22	31.58	9.52	36	19	21
1	16.67	25.93	16.67	40.00	33.33	27.78	33.33	18.52	33.33	10.00	22.22	22.22	30	27	18
2	9.52	28.13	21.43	38.10	34.38	42.86	33.33	25.00	21.43	19.05	12.50	14.29	21	32	28
3	29.41	33.33	16.67	29.41	25.00	55.56	17.65	20.83	11.11	23.53	20.83	16.67	17	24	36
4	30.77	31.25	42.86	46.15	43.75	38.10	7.69	12.50	9.52	15.38	12.50	9.52	13	16	21
5	27.27	23.08	53.33	45.45	61.54	40.00	22.73	0.00	0.00	4.55	15.38	6.67	22	13	15
All Grades	20.14	29.77	25.90	38.13	33.59	41.73	25.90	17.56	18.71	15.83	19.08	13.67	139	131	139

Written Language Percentage of Students at Each Performance Level for All Students															
Grade Level	Level 4			Level 3			Level 2			Level 1			Total Number of Students		
	22-23	23-24	24-25	22-23	23-24	24-25	22-23	23-24	24-25	22-23	23-24	24-25	22-23	23-24	24-25
K	40.91	26.32	19.05	18.18	21.05	28.57	36.36	42.11	38.10	4.55	10.53	14.29	22	19	21
1	0.00	3.70	0.00	42.11	22.22	27.78	36.84	44.44	38.89	21.05	29.63	33.33	19	27	18
2	19.05	3.13	3.57	57.14	40.63	42.86	14.29	25.00	28.57	9.52	31.25	25.00	21	32	28
3	24.00	0.00	5.56	48.00	37.50	22.22	16.00	41.67	41.67	12.00	20.83	30.56	25	24	36
4	28.57	6.25	9.52	17.86	31.25	42.86	42.86	25.00	23.81	10.71	37.50	23.81	28	16	21
5	47.37	15.38	6.67	31.58	38.46	26.67	15.79	23.08	53.33	5.26	23.08	13.33	19	13	15
All Grades	10.07	7.63	7.19	27.34	32.06	31.65	42.45	34.35	36.69	20.14	25.95	24.46	139	131	139

Listening Domain Percentage of Students by Domain Performance Level for All Students												
Grade Level	Well Developed			Somewhat/Moderately			Beginning			Total Number of Students		
	22-23	23-24	24-25	22-23	23-24	24-25	22-23	23-24	24-25	22-23	23-24	24-25
K	30.56	26.32	23.81	50.00	47.37	66.67	19.44	26.32	9.52	36	19	21
1	46.67	48.15	44.44	36.67	29.63	50.00	16.67	22.22	5.56	30	27	18
2	19.05	37.50	32.14	66.67	43.75	50.00	14.29	18.75	17.86	21	32	28
3	41.18	25.00	25.00	41.18	54.17	50.00	17.65	20.83	25.00	17	24	36
4	23.08	25.00	57.14	61.54	56.25	28.57	15.38	18.75	14.29	13	16	21
5	27.27	23.08	53.33	72.73	61.54	40.00	0.00	15.38	6.67	22	13	15
All Grades	32.37	32.82	36.69	53.24	46.56	48.20	14.39	20.61	15.11	139	131	139

Speaking Domain Percentage of Students by Domain Performance Level for All Students												
Grade Level	Well Developed			Somewhat/Moderately			Beginning			Total Number of Students		
	22-23	23-24	24-25	22-23	23-24	24-25	22-23	23-24	24-25	22-23	23-24	24-25
K	11.11	42.11	14.29	66.67	21.05	71.43	22.22	36.84	14.29	36	19	21
1	6.67	14.81	5.56	76.67	62.96	50.00	16.67	22.22	44.44	30	27	18
2	0.00	21.88	21.43	80.95	65.63	71.43	19.05	12.50	7.14	21	32	28
3	17.65	37.50	30.56	58.82	37.50	50.00	23.53	25.00	19.44	17	24	36
4	23.08	37.50	38.10	61.54	50.00	52.38	15.38	12.50	9.52	13	16	21
5	40.91	61.54	60.00	45.45	30.77	33.33	13.64	7.69	6.67	22	13	15
All Grades	15.11	32.06	27.34	66.19	48.09	56.12	18.71	19.85	16.55	139	131	139

Reading Domain Percentage of Students by Domain Performance Level for All Students												
Grade Level	Well Developed			Somewhat/Moderately			Beginning			Total Number of Students		
	22-23	23-24	24-25	22-23	23-24	24-25	22-23	23-24	24-25	22-23	23-24	24-25
K	13.89	21.05	14.29	63.89	57.89	76.19	22.22	21.05	9.52	36	19	21
1	20.00	11.11	5.56	26.67	62.96	66.67	53.33	25.93	27.78	30	27	18
2	14.29	6.25	7.14	61.90	62.50	67.86	23.81	31.25	25.00	21	32	28
3	5.88	0.00	5.56	70.59	66.67	47.22	23.53	33.33	47.22	17	24	36
4	0.00	6.25	9.52	69.23	50.00	57.14	30.77	43.75	33.33	13	16	21
5	31.82	15.38	6.67	50.00	61.54	86.67	18.18	23.08	6.67	22	13	15
All Grades	15.83	9.16	7.91	54.68	61.07	64.03	29.50	29.77	28.06	139	131	139

Writing Domain Percentage of Students by Domain Performance Level for All Students												
Grade Level	Well Developed			Somewhat/Moderately			Beginning			Total Number of Students		
	22-23	23-24	24-25	22-23	23-24	24-25	22-23	23-24	24-25	22-23	23-24	24-25
K	22.22	47.37	47.62	55.56	42.11	38.10	22.22	10.53	14.29	36	19	21
1	3.33	0.00	0.00	73.33	70.37	66.67	23.33	29.63	33.33	30	27	18
2	28.57	9.38	10.71	52.38	62.50	75.00	19.05	28.13	14.29	21	32	28
3	29.41	8.33	5.56	52.94	70.83	77.78	17.65	20.83	16.67	17	24	36
4	53.85	31.25	14.29	30.77	43.75	66.67	15.38	25.00	19.05	13	16	21
5	31.82	46.15	6.67	63.64	38.46	73.33	4.55	15.38	20.00	22	13	15
All Grades	24.46	19.08	13.67	57.55	58.02	67.63	17.99	22.90	18.71	139	131	139

Conclusions based on this data:

1. The number of students tested has fallen between 131 and 139 the past three years.
2. Of all EL students tested in 2023-24, the largest amount of students in this group tested out at Level 3 at 39.69%.
3. In 2023-24, only 9.16% of test students scored "well developed" in Reading.

School and Student Performance Data

Student Population

The 2025 California School Dashboard provides parents and educators with meaningful information on school and district progress so they can participate in decisions to improve student learning.

The California School Dashboard goes beyond test scores alone to provide a more complete picture of how schools and districts are meeting the needs of all students. To help parents and educators identify strengths and areas for improvement, California reports how districts, schools (including alternative schools), and student groups are performing across state and local measures.

This section provides information about the school's student population.

2024-25 Student Population			
Total Enrollment	**Socioeconomically Disadvantaged**	**English Learners**	**Foster Youth**
548	**36.5%**	**26.6%**	**0.0%**
Total Number of Students enrolled in Ralph Emerson Elementary School.	Students who are eligible for free or reduced priced meals; or have parents/guardians who did not receive a high school diploma.	Students who are learning to communicate effectively in English, typically requiring instruction in both the English Language and in their academic courses.	Students whose well being is the responsibility of a court.

2024-25 Enrollment for All Students/Student Group		
Student Group	**Total**	**Percentage**
English Learners	146	26.6%
Foster Youth	0	0.0%
Homeless	1	0.2%
Socioeconomically Disadvantaged	200	36.5%
Students with Disabilities	64	11.7%

Enrollment by Race/Ethnicity		
Student Group	**Total**	**Percentage**
African American	7	1.3%
American Indian	0	0.0%
Asian	37	6.8%
Filipino	12	2.2%
Hispanic	85	15.5%
Two or More Races	26	4.7%
Pacific Islander	0	0.0%
White	343	62.6%

Conclusions based on this data:

1. In 2025-26, 36.5% of students qualify for free or reduced lunch.

2. In 2025-26, 26.6% of students are identified as English Learners.

3. In 2025-26, 11.7% of students are identified as Students with Disabilities.

School and Student Performance Data

Overall Performance

The 2025 California School Dashboard provides parents and educators with meaningful information on school and district progress so they can participate in decisions to improve student learning.

The California School Dashboard goes beyond test scores alone to provide a more complete picture of how schools and districts are meeting the needs of all students. To help parents and educators identify strengths and areas for improvement, California reports how districts, schools (including alternative schools), and student groups are performing across state and local measures.

Performance on state measures, using comparable statewide data, is represented by one of five colors. The performance level (color) is not included when there are fewer than 30 students in any year. This is represented using a greyed out color dial with the words “No Performance Color.”



Red

Lowest Performance



Orange



Yellow



Green



Blue

Highest Performance

2025 Fall Dashboard Overall Performance for All Students

Academic Performance	Academic Engagement	Conditions & Climate
English Language Arts Orange	**Chronic Absenteeism** Yellow	**Suspension Rate** Yellow
Mathematics Yellow		
English Learner Progress Orange		

Conclusions based on this data:

1. English Language Arts is at the ORANGE performance level. Mathematics is at the YELLOW performance level.
2. The suspension rate is at the YELLOW performance level. Chronic Absenteeism is at the YELLOW performance level.
3. There has been an increase in suspension.

School and Student Performance Data

Academic Performance
English Language Arts

The 2025 California School Dashboard provides parents and educators with meaningful information on school and district progress so they can participate in decisions to improve student learning.

The California School Dashboard goes beyond test scores alone to provide a more complete picture of how schools and districts are meeting the needs of all students. To help parents and educators identify strengths and areas for improvement, California reports how districts, schools (including alternative schools), and student groups are performing across state and local measures.

Performance on state measures, using comparable statewide data, is represented by one of five colors. The performance level (color) is not included when there are fewer than 30 students in any year. This is represented using a greyed out color dial with the words “No Performance Color.”


Red
Lowest Performance


Orange


Yellow


Green


Blue
Highest Performance

This section provides number of student groups in each level.

2025 Fall Dashboard English Language Arts Equity Report				
Red	Orange	Yellow	Green	Blue
0	4	1	0	0

This section provides a view of how well students are meeting grade-level standards on the English Language Arts assessment. This measure is based on student performance on either the Smarter Balanced Summative Assessment or the California Alternate Assessment, which is taken annually by students in grades 3–8 and grade 11.

2025 Fall Dashboard English Language Arts Performance for All Students/Student Group

All Students	English Learners	Long-Term English Learners
 Orange	 Orange	
5.9 points below standard	44.4 points below standard	
Declined 7.7 points	Declined 7.8 points	
300 Students	89 Students	

Foster Youth	Homeless	Socioeconomically Disadvantaged
 No Performance Color	 No Performance Color	 Orange
0 Students	Fewer than 11 students - No Data for Privacy	28.9 points below standard
	1 Student	Declined 17.1 points
		136 Students

Students with Disabilities	African American	American Indian
 Orange	 No Performance Color	 No Performance Color
107.9 points below standard	Fewer than 11 students - No Data for Privacy	0 Students
Increased 32.7 points	5 Students	
44 Students		

Asian	Filipino	Hispanic
 No Performance Color	 No Performance Color	 Yellow
79.9 points above standard	Fewer than 11 students - No Data for Privacy	37.1 points below standard
Increased 9.5 points	4 Students	Increased 8.1 points
21 Students		44 Students

Two or More Races	Pacific Islander	White
 No Performance Color	 No Performance Color	 Orange
20.4 points above standard	0 Students	8 points below standard
Declined 18.1 points		Declined 8.7 points
11 Students		196 Students

Conclusions based on this data:

1. ALL students are at the ORANGE performance level and are 5.9 points below the standard.
2. English Learners and Hispanic student groups scored at the ORANGE performance level.
3. All groups of students are in the ORANGE performance level.

School and Student Performance Data

Academic Performance
Mathematics

The 2025 California School Dashboard provides parents and educators with meaningful information on school and district progress so they can participate in decisions to improve student learning.

The California School Dashboard goes beyond test scores alone to provide a more complete picture of how schools and districts are meeting the needs of all students. To help parents and educators identify strengths and areas for improvement, California reports how districts, schools (including alternative schools), and student groups are performing across state and local measures.

Performance on state measures, using comparable statewide data, is represented by one of five colors. The performance level (color) is not included when there are fewer than 30 students in any year. This is represented using a greyed out color dial with the words “No Performance Color.”



Red

Lowest Performance



Orange



Yellow



Green



Blue

Highest Performance

This section provides number of student groups in each level.

2025 Fall Dashboard Mathematics Equity Report				
Red	Orange	Yellow	Green	Blue
0	3	2	0	0

This section provides a view of how well students are meeting grade-level standards on the Mathematics assessment. This measure is based on student performance either on the Smarter Balanced Summative Assessment or the California Alternate Assessment, which is taken annually by students in grades 3–8 and grade 11.

2025 Fall Dashboard Mathematics Performance for All Students/Student Group

All Students	English Learners	Long-Term English Learners
 Yellow	 Yellow	
8.8 points below standard	21.8 points below standard	
Declined 6.7 points	Maintained 2.1 points	
303 Students	92 Students	

Foster Youth	Homeless	Socioeconomically Disadvantaged
 No Performance Color	 No Performance Color	 Orange
0 Students	Fewer than 11 students - No Data for Privacy	27.9 points below standard
	1 Student	Declined 14.2 points
		137 Students

Students with Disabilities	African American	American Indian
 Orange	 No Performance Color	 No Performance Color
99.6 points below standard	Fewer than 11 students - No Data for Privacy	0 Students
Increased 53.9 points	5 Students	
44 Students		

Asian	Filipino	Hispanic
 No Performance Color	 No Performance Color	 Orange
80 points above standard	Fewer than 11 students - No Data for Privacy	61.2 points below standard
Declined 11.9 points	4 Students	Declined 21.9 points
21 Students		44 Students

Two or More Races	Pacific Islander	White
 No Performance Color	 No Performance Color	 Yellow
31.4 points above standard	0 Students	10.7 points below standard
Increased 25.6 points		Declined 5.7 points
11 Students		199 Students

Conclusions based on this data:

1. ALL students are at the YELLOW performance level.
2. English Leaners, White, subgroups scored at the YELLOW performance level.
3. The Socioeconomically Disadvantaged and students with disabilities subgroup scored at the ORANGE performance level.

School and Student Performance Data

Academic Performance
Science

The 2025 California School Dashboard provides parents and educators with meaningful information on school and district progress so they can participate in decisions to improve student learning.

The California School Dashboard goes beyond test scores alone to provide a more complete picture of how schools and districts are meeting the needs of all students. To help parents and educators identify strengths and areas for improvement, California reports how districts, schools (including alternative schools), and student groups are performing across state and local measures.

Performance on state measures, using comparable statewide data, is represented by one of five colors. The performance level (color) is not included when there are fewer than 30 students in any year. This is represented using a greyed out color dial with the words "No Performance Color."


Red
Lowest Performance


Orange


Yellow


Green


Blue
Highest Performance

This section provides number of student groups in each level.

2025 Fall Dashboard Science Equity Report				
Red	Orange	Yellow	Green	Blue
0	0	1	1	0

This section provides a view of how well students are meeting grade-level standards on the Science assessment. This measure is based on student performance either on the Smarter Balanced Summative Assessment or the California Alternate Assessment, which is taken annually by students in grades 3–8 and grade 11.

2025 Fall Dashboard Science Performance for All Students/Student Group

All Students	English Learners	Long-Term English Learners
 Green	 No Performance Color	 No Performance Color
56.8 science points	48.2 science points	0 Students
Maintained 0.8 points	Maintained -0.1 points	
97 Students	23 Students	

Foster Youth	Homeless	Socioeconomically Disadvantaged
 No Performance Color	 No Performance Color	 Yellow
0 Students	0 Students	53 science points
		Declined 3.2 points
		37 Students

Students with Disabilities	African American	American Indian
 No Performance Color	 No Performance Color	 No Performance Color
29.8 science points	Fewer than 11 students - No Data for Privacy	0 Students
12 Students	1 Student	

Asian	Filipino	Hispanic
 No Performance Color	 No Performance Color	 No Performance Color
Fewer than 11 students - No Data for Privacy	Fewer than 11 students - No Data for Privacy	46 science points
9 Students	1 Student	Increased 2.1 points
		15 Students

Two or More Races	Pacific Islander	White
 No Performance Color	 No Performance Color	 Green
Fewer than 11 students - No Data for Privacy	0 Students	57.7 science points
3 Students		Maintained 1.8 points
		62 Students

Conclusions based on this data:

1. All students are in the GREEN level of performance.

School and Student Performance Data

Academic Performance
English Learner Progress

The 2025 California School Dashboard provides parents and educators with meaningful information on school and district progress so they can participate in decisions to improve student learning.

The California School Dashboard goes beyond test scores alone to provide a more complete picture of how schools and districts are meeting the needs of all students. To help parents and educators identify strengths and areas for improvement, California reports how districts, schools (including alternative schools), and student groups are performing across state and local measures.

Performance on state measures, using comparable statewide data, is represented by one of five colors. The performance level (color) is not included when there are fewer than 30 students in any year. This is represented using a greyed out color dial with the words “No Performance Color.”

This section provides a view of the percentage of current EL students making progress towards English language proficiency or maintaining the highest level.

2025 Fall Dashboard English Learner Progress Indicator	
English Learner Progress	**Long-Term English Learner Progress**
	
Orange	No Performance Color
53.6 making progress.	making progress.
Number Students: 112 Students	Number Students: 0 Students

This section provides a view of the percentage of current EL students who progressed at least one ELPI level, maintained ELPI level 4, maintained lower ELPI levels (i.e, levels 1, 2L, 2H, 3L, or 3H), or decreased at least one ELPI Level.

2025 Fall Dashboard Student English Language Acquisition Results			
Decreased One ELPI Level	**Maintained ELPI Level 1, 2L, 2H, 3L, or 3H**	**Maintained ELPI Level 4**	**Progressed At Least One ELPI Level**
14.3%	32.1%	0.9%	52.7%

Conclusions based on this data:

1. 52.7% of English Learners progressed at least one ELPI level. 53.6% of ELs are making progress towards English language proficiency.
2. 14.3% of English Learners decreased one ELPI level.
3. 112 students were tested on the ELPAC.

School and Student Performance Data

Academic Performance
College/Career Report

The 2025 California School Dashboard provides parents and educators with meaningful information on school and district progress so they can participate in decisions to improve student learning.

The California School Dashboard goes beyond test scores alone to provide a more complete picture of how schools and districts are meeting the needs of all students. To help parents and educators identify strengths and areas for improvement, California reports how districts, schools (including alternative schools), and student groups are performing across state and local measures.

Performance on state measures, using comparable statewide data, is represented by one of five colors. The performance level (color) is not included when there are fewer than 30 students in any year. This is represented using a greyed out color dial with the words “No Performance Color.”

This section provided information on the percentage of high school graduates who are placed in the "Prepared" level on the College/Career Indicator.

Very Low	Low	Medium	High	Very High
Lowest Performance				Highest Performance

This section provides number of student groups in each level.

2025 Fall Dashboard College/Career Equity Report				
Red	Orange	Yellow	Green	Blue

Explore information on the percentage of high school graduates who are placed in the "Prepared" level on the College/Career Indicator.

2025 Fall Dashboard College/Career Performance for All Students/Student Group		
All Students	English Learners	Long-Term English Learners
Foster Youth	Homeless	Socioeconomically Disadvantaged
Students with Disabilities	African American	American Indian
Asian	Filipino	Hispanic
Two or More Races	Pacific Islander	White

Conclusions based on this data:

1.

School and Student Performance Data

Academic Engagement
Chronic Absenteeism

The 2025 California School Dashboard provides parents and educators with meaningful information on school and district progress so they can participate in decisions to improve student learning.

The California School Dashboard goes beyond test scores alone to provide a more complete picture of how schools and districts are meeting the needs of all students. To help parents and educators identify strengths and areas for improvement, California reports how districts, schools (including alternative schools), and student groups are performing across state and local measures.

Performance on state measures, using comparable statewide data, is represented by one of five colors. The performance level (color) is not included when there are fewer than 30 students in any year. This is represented using a greyed out color dial with the words “No Performance Color.”



Red

Lowest Performance



Orange



Yellow



Green



Blue

Highest Performance

This section provides number of student groups in each level.

2025 Fall Dashboard Chronic Absenteeism Equity Report

Red	Orange	Yellow	Green	Blue

This section provides information about the percentage of students in kindergarten through grade 8 who are absent 10 percent or more of the instructional days they were enrolled.

2025 Fall Dashboard Chronic Absenteeism Performance for All Students/Student Group

All Students	English Learners	Long-Term English Learners
 Yellow	 Yellow	
12.6% Chronically Absent	14.6% Chronically Absent	
Declined 2.3	Declined 2.9	
563 Students	157 Students	

Foster Youth	Homeless	Socioeconomically Disadvantaged
 No Performance Color	 No Performance Color	 Yellow
0 Students	Fewer than 11 students - No Data for Privacy	15% Chronically Absent
	2 Students	Declined 7.7
		254 Students

Students with Disabilities	African American	American Indian
 Yellow	 No Performance Color	 No Performance Color
17.3% Chronically Absent	Fewer than 11 students - No Data for Privacy	0 Students
Declined 11.5	7 Students	
81 Students		

Asian	Filipino	Hispanic
 Green	 No Performance Color	 Yellow
2.7% Chronically Absent	7.7% Chronically Absent	19.3% Chronically Absent
Maintained -0.2	0	Declined 5.4
37 Students	13 Students	88 Students

Two or More Races	Pacific Islander	White
 Green	 No Performance Color	 Yellow
6.9% Chronically Absent	0 Students	13.1% Chronically Absent
Declined 6.9		Declined 1
58 Students		360 Students

Conclusions based on this data:

1. English learners, Socioeconomically Disadvantaged, Students with Disabilities, and Hispanic subgroups scored at the YELLOW level.
2. TTwo or More Races and Asian subgroups scored at the GREEN performance level.
3. ALL subgroups made progress from the previouis year.

School and Student Performance Data

Academic Engagement
Graduation Rate

The 2025 California School Dashboard provides parents and educators with meaningful information on school and district progress so they can participate in decisions to improve student learning.

The California School Dashboard goes beyond test scores alone to provide a more complete picture of how schools and districts are meeting the needs of all students. To help parents and educators identify strengths and areas for improvement, California reports how districts, schools (including alternative schools), and student groups are performing across state and local measures.

Performance on state measures, using comparable statewide data, is represented by one of five colors. The performance level (color) is not included when there are fewer than 30 students in any year. This is represented using a greyed out color dial with the words “No Performance Color.”

Red	Orange	Yellow	Green	Blue
Lowest Performance				Highest Performance

This section provides number of student groups in each level.

2025 Fall Dashboard Graduation Rate Equity Report				
Red	Orange	Yellow	Green	Blue

This section provides information about students completing high school, which includes students who receive a standard high school diploma.

2025 Fall Dashboard Graduation Rate for All Students/Student Group		
All Students	English Learners	Long-Term English Learners
Foster Youth	Homeless	Socioeconomically Disadvantaged
Students with Disabilities	African American	American Indian
Asian	Filipino	Hispanic
Two or More Races	Pacific Islander	White

Conclusions based on this data:

1.

School and Student Performance Data

Conditions & Climate
Suspension Rate

The 2025 California School Dashboard provides parents and educators with meaningful information on school and district progress so they can participate in decisions to improve student learning.

The California School Dashboard goes beyond test scores alone to provide a more complete picture of how schools and districts are meeting the needs of all students. To help parents and educators identify strengths and areas for improvement, California reports how districts, schools (including alternative schools), and student groups are performing across state and local measures.

Performance on state measures, using comparable statewide data, is represented by one of five colors. The performance level (color) is not included when there are fewer than 30 students in any year. This is represented using a greyed out color dial with the words “No Performance Color.”



Red

Lowest Performance



Orange



Yellow



Green



Blue

Highest Performance

This section provides number of student groups in each level.

2025 Fall Dashboard Suspension Rate Equity Report				
Red	Orange	Yellow	Green	Blue
0	3	0	3	1

This section provides information about the percentage of students in kindergarten through grade 12 who have been suspended at least once in a given school year. Students who are suspended multiple times are only counted once.

2025 Fall Dashboard Suspension Rate for All Students/Student Group

All Students	English Learners	Long-Term English Learners
 Yellow	 Green	
0.7% suspended at least one day	0.6% suspended at least one day	
Increased 0.4%	Maintained -0.1%	
565 Students	157 Students	

Foster Youth	Homeless	Socioeconomically Disadvantaged
 No Performance Color	 No Performance Color	 Green
0 Students	Fewer than 11 students - No Data for Privacy	0.4% suspended at least one day
	2 Students	Increased 0.4%
		254 Students

Students with Disabilities	African American	American Indian
 Orange	 No Performance Color	 No Performance Color
2.5% suspended at least one day	Fewer than 11 students - No Data for Privacy	0 Students
Increased 2.5%	7 Students	
81 Students		

Asian	Filipino	Hispanic
 Blue	 No Performance Color	 Orange
0% suspended at least one day	0% suspended at least one day	1.1% suspended at least one day
Maintained 0%	13 Students	Increased 1.1%
37 Students		88 Students

Two or More Races	Pacific Islander	White
 Orange	 No Performance Color	 Green
1.7% suspended at least one day	0 Students	0.6% suspended at least one day
Increased 1.7%		Maintained 0%
58 Students		362 Students

Conclusions based on this data:

1. Students with disabilities, two or more races, and Hispanic students are in the ORANGE performance level.
2. The English Learners GREEN performance level.
3. Suspension rates are very low.

Goals, Strategies, & Proposed Expenditures

Complete a copy of the following table for each of the school's goals. Duplicate the table as needed.

Goal 1

Title and Description of School Goal

Broad statement that describes the desired result to which all strategies/activities are directed.

Increase student proficiency rates in English Language Arts and Mathematics
Increase student achievement in Language Arts and Mathematics

LCAP Goal to which this School Goal is Aligned

LCAP goal to which this school goal is aligned.

Board of Education Goals
1. Students will be career/college ready via high-quality instruction
2. Students will be physically, emotionally, and mentally healthy
3. Recruit and retain highly qualified employees
4. Maintain efficient and effective operations

LCAP Goals
1. Students will be career/college ready via high-quality instruction of State Standards as measured by State, federal, and District assessment tools, including the California Dashboard, with success as indicated in the metrics, which defines targets for each metric by the end of the 2026-27 school year. (Instructional Services)

2. Students will be physically, emotionally, and mentally healthy and supported through Parental Involvement as measured by State, federal, and District assessment tools, including the California Dashboard, with success as indicated in the metrics, which defines targets for each metric by the end of the 2026-27 school year. (Educational Services)

3. Recruit and retain quality employees as measured by full employment of teaching staff with appropriate credentials and placed in appropriate assignments following Williams compliance by September 1, 2025, depending on clearance requirements (i.e., fingerprinting). (Human Resources)

4. Efficient and effective operations are measured by appropriate facilities, especially classrooms that are conducive to the needs of the instructional program from the first day of the school year, meeting Williams' facilities requirements. (Business Services)

Identified Need

A description of any areas that need significant improvement based on a review of Dashboard and local data, including any areas of low performance and significant performance gaps among student groups on Dashboard indicators, and any steps taken to address those areas.

There is a need to increase proficiency in both ELA and Mathematics. The overall data in CERS, dashboard, and local data show a mismatch between what we are seeing pertaining to students growth. We continue to see need in 3rd grade overall and in 5th grade math. A schoolwide approach would help us target "bubble" students and increase achievement overall.

These are areas we would like to address. A schoolwide root cause analysis indicates the following:
Root Cause 1: Inconsistent implementation of foundational literacy instruction across classrooms
- SPSA Goal: Increase the percentage of students meeting or exceeding grade-level benchmarks in ELA

Root Cause 2: Inconsistent implementation in development of math conceptual understanding
- SPSA Goal: Increase the percentage of students meeting or exceeding grade-level benchmarks in Math

Root Cause 3: Inconsistent use of assessment data to guide instruction
- SPSA Goal: Strengthen data-driven instructional practices schoolwide

Annual Measurable Outcomes

Identify the metric(s) and/or state indicator(s) that your school will use as a means of evaluating progress toward accomplishing the goal.

Metric/Indicator	Baseline/Actual Outcome	Expected Outcome
Students will gain proficiency by 3% or 5 growth points in Math and ELA as measured by CAASP	GIven the current data in CERS: We find the following: Logitudinally - We continue to show gains when comparing cohorts in all areas over the past two years based on scaled scores. ELPAC has increased by 52pts, ELA 102pts, Math 81pts. In ELA our growth in percentages of students who meet or exceed are as follows: 3rd Grade 37% to 40% - Growth 3% 4th Grade 48% to 55% - Growth 7% 5th Grade 54% to 60% - Growth 6% In Math our growth in percentages of students who meet or exceed are as follows: 3rd Grade 48% to 43% - Decline 5% 4th Grade 54% to 57% - Growth 3% 5th Grade 47% to 48% - Growth 1%	Students will gain proficiency by 3% or 5 growth points in Math and ELA as measured by CAASP
Using STAR Assessment Data For Reading Show an overall schoolwide growth. We expect to see approx. 65% proficiency at the end of the year.	We saw a 6% increase in proficiency of STAR using district benchmark indicators. We went from 59.9% proficiency to 66.1% proficiency. This exceeded our goal of 65% proficiency.	We expect to see approx. 68% proficiency at the end of the year.
Using our Math Screening Measure show gains. We expect to see approx. 62% proficiency at the end of the year.	On the Math Screener profiency went from 57% to 59% proficiency. This was just shy of our 60% goal.	We expect to see approx. 62% proficiency at the end of the year.
Using Dibels MClass as a benchmark for Early Literacy, we would like to see growth in our percentage at and above benchmark.	Currently, our percentages of students at or above benchmark are: Kinder - 71% 1st Grade - 67.6%	We expect to see all grade levels at at least 75% at or above benchmark in grades K-2.

	2nd Grade - 82.6%	

Strategies/Activities

Complete the Strategy/Activity Table with each of your school's strategies/activities. Add additional rows as necessary.

Strategy/ Activity #	Description	Students to be Served	Proposed Expenditures
1.1	Strengthen Tier 1 Literacy/Math Instruction Increase Understanding of ELA and Mathematics Framework • Increase use of structured literacy/math practices • Provide coaching and modeling for teachers	All Students	
1.2	Develop morning and afternoon tutoring and/or enrichment opportunities to extended learning opportunities.	All Students	18970.92 Title I 1000-1999: Certificated Personnel Salaries
1.3	Improve Systematic MTSS Structures • Use flexible grouping based on ongoing data to build coherent RTI Structures. • Provide push-in and targeted small-group instruction	All Students	56,093.66 LCFF - Supplemental 1000-1999: Certificated Personnel Salaries 45,000 Title I 1000-1999: Certificated Personnel Salaries
1.4	Provide Targeted Professional Development • Focus on differentiation through UDL, scaffolding, and engagement strategies • Align PD with identified instructional gaps and student needs	All Students	15213.73 Title I 1000-1999: Certificated Personnel Salaries
1.5	Build Data-Driven Instructional Practices • Conduct regular data cycles (every 6–8 weeks) • Use common assessments to monitor progress • Train staff on data analysis and instructional response	All Students	14,084.25 Title I 1000-1999: Certificated Personnel Salaries
1.6	School will continue to research and purchase high quality, research based, curricular and supplemental instructional materials for ELA and Mathematics	All Students	15,000 Title I 4000-4999: Books And Supplies
1.7	School will provide family nights for working with students in their areas of need.	All Students	1685.52 Title I Part A: Parent Involvement 1000-1999: Certificated Personnel Salaries

Strategy/ Activity #	Description	Students to be Served	Proposed Expenditures

Annual Review

SPSA Year Reviewed: 2025-26

Respond to the following prompts relative to this goal. If the school is in the first year of implementing the goal, an analysis is not required, and this section may be left blank and completed at the end of the year after the plan has been executed.

Analysis

Describe the overall implementation and effectiveness of the strategies/activities to achieve the articulated goal.

Last year we were able to implement our strategies and activities. We were able to see much growth in our curriculum and site level data. Our STAR, Site Math Screener, and other site based multiple measures showed great gains across grade levels.

Describe any major differences between the intended implementation and/or the budgeted expenditures to implement the strategies/activities to meet the articulated goal.

There were no significant differences between the intended and actual budget expenditures. The implementation of strategies was mostly successful with some professional development being limited by time. All teachers participated in Instructional Rounds and professional development opportunities.

Describe any changes that will be made to this goal, the annual outcomes, metrics, or strategies/activities to achieve this goal as a result of this analysis. Identify where those changes can be found in the SPSA.

We have made some changes to the goals. We have are adding further pointed and purposeful work around rigor and standards alignment. Additionally, we are adding in the use of work analysis protocols. Additionally, we did a comprehensive needs assessment that helped us further direct this work and move to implement Title 1 programming schoolwide.

Goals, Strategies, & Proposed Expenditures

Complete a copy of the following table for each of the school's goals. Duplicate the table as needed.

Goal 2

Title and Description of School Goal

Broad statement that describes the desired result to which all strategies/activities are directed.

English Language Learners
Increase ELL success in ELA and Mathematics

LCAP Goal to which this School Goal is Aligned

LCAP goal to which this school goal is aligned.

Board of Education Goals
1. Students will be career/college ready via high-quality instruction
2. Students will be physically, emotionally, and mentally healthy
3. Recruit and retain highly qualified employees
4. Maintain efficient and effective operations

LCAP Goals
1. Students will be career/college ready via high-quality instruction of State Standards as measured by State, federal, and District assessment tools, including the California Dashboard, with success as indicated in the metrics, which defines targets for each metric by the end of the 2026-27 school year. (Instructional Services)

2. Students will be physically, emotionally, and mentally healthy and supported through Parental Involvement as measured by State, federal, and District assessment tools, including the California Dashboard, with success as indicated in the metrics, which defines targets for each metric by the end of the 2026-27 school year. (Educational Services)

3. Recruit and retain quality employees as measured by full employment of teaching staff with appropriate credentials and placed in appropriate assignments following Williams compliance by September 1, 2025, depending on clearance requirements (i.e., fingerprinting). (Human Resources)

4. Efficient and effective operations are measured by appropriate facilities, especially classrooms that are conducive to the needs of the instructional program from the first day of the school year, meeting Williams' facilities requirements. (Business Services)

Identified Need

A description of any areas that need significant improvement based on a review of Dashboard and local data, including any areas of low performance and significant performance gaps among student groups on Dashboard indicators, and any steps taken to address those areas.

Students in this subgroup have inconsistent growth in their overall achievement as compared to there English Only peers. However, students who go through our ELD program and become reclassified show significant gains over all other subgroups. This continues to be true. Reclassified students at Emerson are outperforming all other subgroups. The 25-26 showed tremendous gains in CAASP ELA, 3rd to 4th grade CAASPP Math scores, and district-wide benchmarks. However, much like that of the whole school progress, 3rd and 5th grade need specific focus.

Annual Measurable Outcomes

Identify the metric(s) and/or state indicator(s) that your school will use as a means of evaluating progress toward accomplishing the goal.

Metric/Indicator	Baseline/Actual Outcome	Expected Outcome
3% increase in Math and ELA on the CAASPP for English Language Learners	Given current data in CERS overall profiency for ELs in ELA was 15% in 24-25. In 25-26, 26.3% were proficient. Meeting our 3% increase. In math, 24-25 overall EL proficiency was 32%. In 25-26 is was 29% However, there was a 4% gain from 3rd to 4th grade in mathematics.	3% increase in Math and ELA for English Language Learners
3% increase in English Learner Progress on the ELPAC	Given the current data in CERS 63% of ELs made 1-3 levels of progress on ELPAC. 62% of ELs scored at a performance level of 3 or 4.	3% increase in English Learner Progress
We expect to see approx. 40% proficiency on the STAR Reading Assessment by the end of the year and at least a 80% of ELs meeting their annual growth goal from the beginning of the year.	Our STAR reading shows that 38.9% of ELs were proficient using District Benchmark. This is met our goal of 30% proficiency. 72.5% of our ELs made their annual growth goal for the year.	We expect to see approx. 40% proficiency by the end of the year.
We expect to see approx. 45% proficiency on our District Mathe by the end of the year.	Our goal here was for 36% of ELs to be proficient on our end of the year math screener. The actual outcome was 41.9% profiency.	We expect to see approx. 45% proficiency by the end of the year.

Strategies/Activities

Complete the Strategy/Activity Table with each of your school's strategies/activities. Add additional rows as necessary.

Strategy/ Activity #	Description	Students to be Served	Proposed Expenditures
2.1	Certificated teachers will provide 30 minutes of ELD instruction daily in grades first through fifth and 20 minutes of ELD instruction daily in kindergarten and transitional kindergarten classrooms focusing on vocabulary strategies and increased focus on designated ELD	English Learner Students	
2.2	ELD will analyze and restructure ELD supports to increase they depth and breadth of supports.	Students identified as English Learner/Immigrant	
2.3	The ELD specialist will support classroom teachers and EL instructional assistants in implementing and refining Project GLAD strategies to support EL students with mathematics while utilizing academic vocabulary; this will occur during data chats and/or grade-level planning meetings for each grade level throughout the school year.	Students identified as English Learner/Immigrant	
2.4	All teachers and Paraeducators will be given professional development using Project GLAD or other evidence-based strategies to help English Learner students increase literacy and Tier 3 vocabulary.	Students who are identified as English Learner/Immigrant	3629.61 Title III 1000-1999: Certificated Personnel Salaries
2.5	Parents of English Learner/Immigrant students will be provided the following educational opportunities to learn and participate in to support their children's academic growth and expand language skills: this will include family math and ELA nights and instructional technology supports	Students who are identified as English Learner/Immigrant	925.00 Title III 1000-1999: Certificated Personnel Salaries 45.95

Strategy/ Activity #	Description	Students to be Served	Proposed Expenditures
			Title III Immigrant Education Program 1000-1999: Certificated Personnel Salaries
2.6	ELD Team will implement afterschool homework/help for Newcomers and impacted ELs	Students who are identified as English Learner/Immigrant	LCFF 2000-2999: Classified Personnel Salaries This is part of paraeducators regular time/duties
2.7	Purchase materials to complement Project GLAD units and relate to use of GLAD strategies in the classroom and across content areas.	Students who are identified as English Learner/Immigrant	15000 Title I 4000-4999: Books And Supplies 7735 Title III 4000-4999: Books And Supplies
2.8	RTI Teacher will dedicate 1hr per day providing supplemental instruction and social-emotional support to English Learners including immigrant students.	Students who are identified as English Learner/Immigrant	2769.90 Title III 1000-1999: Certificated Personnel Salaries 7782.10 Title III Immigrant Education Program 1000-1999: Certificated Personnel Salaries

Annual Review

SPSA Year Reviewed: 2025-26

Respond to the following prompts relative to this goal. If the school is in the first year of implementing the goal, an analysis is not required, and this section may be left blank and completed at the end of the year after the plan has been executed.

Analysis

Describe the overall implementation and effectiveness of the strategies/activities to achieve the articulated goal.

The strategies that were implemented seemed to hold math steady even though we had an increase in newcomers. In ELA a large group of newcomers took the ELA test for the first time. This seems to explain some of the decrease given the significant increase in ELPAC scores.

Describe any major differences between the intended implementation and/or the budgeted expenditures to implement the strategies/activities to meet the articulated goal.

There were no significant differences between intention and implementation of the strategies or budget.

Describe any changes that will be made to this goal, the annual outcomes, metrics, or strategies/activities to achieve this goal as a result of this analysis. Identify where those changes can be found in the SPSA.

We are analyzing the stuctures of support and the implementation of strategies with that support.

Goals, Strategies, & Proposed Expenditures

Complete a copy of the following table for each of the school's goals. Duplicate the table as needed.

Goal 3

Title and Description of School Goal

Broad statement that describes the desired result to which all strategies/activities are directed.

Continued Professional Development and Implementation of California State Standards for Staff
Emerson Elementary School will dedicate time for continued professional development for the implementation of Tier I Instructional Strategies

LCAP Goal to which this School Goal is Aligned

LCAP goal to which this school goal is aligned.

Board of Education Goals
1. Students will be career/college ready via high-quality instruction
2. Students will be physically, emotionally, and mentally healthy
3. Recruit and retain highly qualified employees
4. Maintain efficient and effective operations

LCAP Goals
1. Students will be career/college ready via high-quality instruction of State Standards as measured by State, federal, and District assessment tools, including the California Dashboard, with success as indicated in the metrics, which defines targets for each metric by the end of the 2026-27 school year. (Instructional Services)

2. Students will be physically, emotionally, and mentally healthy and supported through Parental Involvement as measured by State, federal, and District assessment tools, including the California Dashboard, with success as indicated in the metrics, which defines targets for each metric by the end of the 2026-27 school year. (Educational Services)

3. Recruit and retain quality employees as measured by full employment of teaching staff with appropriate credentials and placed in appropriate assignments following Williams compliance by September 1, 2025, depending on clearance requirements (i.e., fingerprinting). (Human Resources)

4. Efficient and effective operations are measured by appropriate facilities, especially classrooms that are conducive to the needs of the instructional program from the first day of the school year, meeting Williams' facilities requirements. (Business Services)

Identified Need

A description of any areas that need significant improvement based on a review of Dashboard and local data, including any areas of low performance and significant performance gaps among student groups on Dashboard indicators, and any steps taken to address those areas.

Teachers have a desire to increase their understanding of the California state standards, the curriculum and best practices/instructional strategies to advance student achievement for all subgroups

Annual Measurable Outcomes

Identify the metric(s) and/or state indicator(s) that your school will use as a means of evaluating progress toward accomplishing the goal.

Metric/Indicator	Baseline/Actual Outcome	Expected Outcome
Participation in professional development, grade level and staff meetings	100% of teachers participate in staff meeting and professional development.	Continue 100% participation in growth opportunities.
Increased use of targeted strategies in classroom instruction.	Currently 75% of classrooms have showed an increase in target strategies.	We will expect 100% of classrooms to show evidence of increase in use of targeted strategies.

Strategies/Activities

Complete the Strategy/Activity Table with each of your school's strategies/activities. Add additional rows as necessary.

Strategy/ Activity #	Description	Students to be Served	Proposed Expenditures
3.1	Increase Teacher Participation in Learning Lab, Conferences, and Instructional Rounds Increase opportunities and support for collaborative planning Teachers are supported in collaborative opportunities to receive professional development and time to innovate and reflect on their practices and hone in on students not meeting proficiency. Teachers watch and learn from each other. Increased focus on standards-alignment, Tier 1 Interventions for Targeted Students, and ELD practices.	All Students	20,000 Title I 1000-1999: Certificated Personnel Salaries
3.2	TK-5 teachers will participate in collaborative planning and professional development that increases teacher knowledge of Science of reading.	All Students	
3.3	Teachers will learn to plan standards-based Units using big ideas and essential questions during increase opportunities and support for collaborative planning, including professional development and time to innovate and reflect on their practices.	All Students	
3.4	Create space and understanding for using Street Data and creating common formative assessments.	All Students	
3.7	Targeted professional development around rigor and teacher clarity - using Visible Learning	All Students	

Annual Review

SPSA Year Reviewed: 2025-26

Respond to the following prompts relative to this goal. If the school is in the first year of implementing the goal, an analysis is not required, and this section may be left blank and completed at the end of the year after the plan has been executed.

Analysis

Describe the overall implementation and effectiveness of the strategies/activities to achieve the articulated goal.

Teachers were able to participate in Instructional Rounds and were able to successfully create long term planning guides. Teachers were able to successfully implement PDSA cycles and work with multiple measures of data to analyze the effectiveness of change ideas.

Describe any major differences between the intended implementation and/or the budgeted expenditures to implement the strategies/activities to meet the articulated goal.

There was not a significant difference in implementation or budget expenditures.

Describe any changes that will be made to this goal, the annual outcomes, metrics, or strategies/activities to achieve this goal as a result of this analysis. Identify where those changes can be found in the SPSA.

We are adding more work around vertical articulation, assessment and work analysis, rigor, and standards-based planning.

Goals, Strategies, & Proposed Expenditures

Complete a copy of the following table for each of the school's goals. Duplicate the table as needed.

Goal 4

Title and Description of School Goal

Broad statement that describes the desired result to which all strategies/activities are directed.

Diversity, Equity, and Inclusion
We will increase our awareness and supports to build a welcoming, equitable, and inclusive school environment for all students.

LCAP Goal to which this School Goal is Aligned

LCAP goal to which this school goal is aligned.

Board of Education Goals
1. Students will be career/college ready via high-quality instruction
2. Students will be physically, emotionally, and mentally healthy
3. Recruit and retain highly qualified employees
4. Maintain efficient and effective operations

LCAP Goals
1. Students will be career/college ready via high-quality instruction of State Standards as measured by State, federal, and District assessment tools, including the California Dashboard, with success as indicated in the metrics, which defines targets for each metric by the end of the 2026-27 school year. (Instructional Services)

2. Students will be physically, emotionally, and mentally healthy and supported through Parental Involvement as measured by State, federal, and District assessment tools, including the California Dashboard, with success as indicated in the metrics, which defines targets for each metric by the end of the 2026-27 school year. (Educational Services)

3. Recruit and retain quality employees as measured by full employment of teaching staff with appropriate credentials and placed in appropriate assignments following Williams compliance by September 1, 2025, depending on clearance requirements (i.e., fingerprinting). (Human Resources)

4. Efficient and effective operations are measured by appropriate facilities, especially classrooms that are conducive to the needs of the instructional program from the first day of the school year, meeting Williams' facilities requirements. (Business Services)

Identified Need

A description of any areas that need significant improvement based on a review of Dashboard and local data, including any areas of low performance and significant performance gaps among student groups on Dashboard indicators, and any steps taken to address those areas.

All students need a place that supports them physically, emotionally, and mentally.

Annual Measurable Outcomes

Identify the metric(s) and/or state indicator(s) that your school will use as a means of evaluating progress toward accomplishing the goal.

Metric/Indicator	Baseline/Actual Outcome	Expected Outcome
Based on the District's LCAP goals students will be physically, emotionally, and mentally healthy and supported.	Teachers and students participated in several DEI opportunities related to belonging and identity. We also began to build some new library choices related to mental health. Each class at each grade level received four to six weeks of instruction in performing arts, highlighting cultural diversity.	We will increase our awareness and supports to build a welcoming, equitable, and inclusive school environment for all students.We also want to add in the tenets of belonging to our DEI model.

Strategies/Activities

Complete the Strategy/Activity Table with each of your school's strategies/activities. Add additional rows as necessary.

Strategy/ Activity #	Description	Students to be Served	Proposed Expenditures
4.1	Increase literature for children representing neurodiversity	All Students	1000 Donations None Specified Monies donated by PTA and Emerson Fundraising Committee
4.2	Enhance classroom experiences by partnering with families to come into classrooms to share their culture.	All Students	
4.3	Work with the book Street Data to increase understanding of data and and equity	All Students	
4.4	Build a teacher Repository of Lesson Materials and Cultural Resources	All Students	
4.5	Each class at each grade level will receive four to six weeks of instruction in the area of performing arts highlighting cultural diversity.	All Student	5,000 Other 5800: Professional/Consulting Services And Operating Expenditures This funding will be provided by the Emerson Fundraising Committee and Prop. 28

Annual Review

SPSA Year Reviewed: 2025-26

Respond to the following prompts relative to this goal. If the school is in the first year of implementing the goal, an analysis is not required, and this section may be left blank and completed at the end of the year after the plan has been executed.

Analysis

Describe the overall implementation and effectiveness of the strategies/activities to achieve the articulated goal.

We were not able to spend as much time on the social justice standards as we would have hoped but continue to imbed them in all of our activities and professional development.We were not able to grow our neurodiversity library as much as we would have like but have added it again as a goal.

Describe any major differences between the intended implementation and/or the budgeted expenditures to implement the strategies/activities to meet the articulated goal.

There were no major difference metween in between the intended implementation and/or the budgeted expenditures to implement the strategies/activities to meet the articulated goal.

Describe any changes that will be made to this goal, the annual outcomes, metrics, or strategies/activities to achieve this goal as a result of this analysis. Identify where those changes can be found in the SPSA.

We will be working to add a repository of resources for teachers and working to add in family voices to increase a sense of belonging at Emerson.

Goals, Strategies, & Proposed Expenditures

Complete a copy of the following table for each of the school's goals. Duplicate the table as needed.

Goal 5

Title and Description of School Goal

Broad statement that describes the desired result to which all strategies/activities are directed.

Social Emotional Learning and Art Education
To support all students' social and emotional learning, Emerson staff will continue to analyze PBIS implementation of strategies and the implementation of Social Emotional Learning strategies at the site, including lessons from the Second Step program in grades kindergarten through fifth grade.

LCAP Goal to which this School Goal is Aligned

LCAP goal to which this school goal is aligned.

Board of Education Goals
1. Students will be career/college ready via high-quality instruction
2. Students will be physically, emotionally, and mentally healthy
3. Recruit and retain highly qualified employees
4. Maintain efficient and effective operations

LCAP Goals
1. Students will be career/college ready via high-quality instruction of State Standards as measured by State, federal, and District assessment tools, including the California Dashboard, with success as indicated in the metrics, which defines targets for each metric by the end of the 2026-27 school year. (Instructional Services)

2. Students will be physically, emotionally, and mentally healthy and supported through Parental Involvement as measured by State, federal, and District assessment tools, including the California Dashboard, with success as indicated in the metrics, which defines targets for each metric by the end of the 2026-27 school year. (Educational Services)

3. Recruit and retain quality employees as measured by full employment of teaching staff with appropriate credentials and placed in appropriate assignments following Williams compliance by September 1, 2025, depending on clearance requirements (i.e., fingerprinting). (Human Resources)

4. Efficient and effective operations are measured by appropriate facilities, especially classrooms that are conducive to the needs of the instructional program from the first day of the school year, meeting Williams' facilities requirements. (Business Services)

Identified Need

A description of any areas that need significant improvement based on a review of Dashboard and local data, including any areas of low performance and significant performance gaps among student groups on Dashboard indicators, and any steps taken to address those areas.

There is a need for a positive behavioral program and social emotional learning for all students at Emerson which supports students' academic and social emotional learning to ensure growth as well as safety. During the pandemic PBIS structure and services were difficult to maintain. Some consistency was lost.

Annual Measurable Outcomes

Identify the metric(s) and/or state indicator(s) that your school will use as a means of evaluating progress toward accomplishing the goal.

Metric/Indicator	Baseline/Actual Outcome	Expected Outcome
The Emerson PBIS program continues to develop and refine itself to support the established school-wide behavior matrix and pledge and reward students for behaving positively in the classroom and on the playground. Additionally, Emerson will increase opportunities for belonging and emotional management.		We want to build a positive, proactive, and responsive environment. We expect that with additional goals for students, we will continue to reduce significant incidents and offer more support for students with reoccurring issues and needs. Also adding

Strategies/Activities

Complete the Strategy/Activity Table with each of your school's strategies/activities. Add additional rows as necessary.

Strategy/ Activity #	Description	Students to be Served	Proposed Expenditures
5.1	Increase training for Campus Supervisors on PBIS and effective strategies for creating a positive environment on the playground.	All Sudents	
5.2	To build consistency among teachers regarding behavior support systems, teachers and staff will continue to receive professional development and support around responsive, strength-based management. We will use Love and Logic, research on Warm Demanders, and strategies from Kagan and The Responsive Classroom to create positive behavioral supports.	All Students	
5.3	Teachers, Curriculum Specialist, and RTI Teacher supporting social emotional health for targeted students not meeting academic standards will continue to Use Second Step Lessons and/or social skills groups to provide Tier I and II Emotional supports.	All Students	20,000 LCFF - Base 1000-1999: Certificated Personnel Salaries
5.4	We will be adding sensory furniture and tools to classrooms to support any student.	All Studens	2000 Donations BAEF
5.6	Add professional development opportunities to support behavioral needs in the classroom from the Behavior Interventionist.	Students with Behavioral Needs	
5.7	Teacher Leaders will lead sessions on Belonging for all teachers.		

Annual Review

SPSA Year Reviewed: 2025-26

Respond to the following prompts relative to this goal. If the school is in the first year of implementing the goal, an analysis is not required, and this section may be left blank and completed at the end of the year after the plan has been executed.

Analysis

Describe the overall implementation and effectiveness of the strategies/activities to achieve the articulated goal.

This is an ongoing goal. We continue to increase and refine goals and strategies, but essentially, they remain important in an ongoing manner. Last year, we were able to implement all of our strategy. However, the nature of supporting the social-emotional needs of all students is continuous and ever-changing. 100% of teachers and staff had some form of SEL professional development. 100% of teachers have an ongoing dialog on student emotional health and needs. We

are seeing a low incidence of ODR referrals. 9 all last year; however, they seem to be from the same students. We are continuing to work on strategies that will sustain improvement.

Describe any major differences between the intended implementation and/or the budgeted expenditures to implement the strategies/activities to meet the articulated goal.

There were no major differences between the intended implementation and/or the budgeted expenditures to implement the strategies/activities to meet the articulated goal.

Describe any changes that will be made to this goal, the annual outcomes, metrics, or strategies/activities to achieve this goal as a result of this analysis. Identify where those changes can be found in the SPSA.

We will be adding some supports for Immigrants and ELs and training from our Behavior Interventionist to support teachers to support students with behavioral needs.

Budget Summary

Complete the Budget Summary Table below. Schools may include additional information, and adjust the table as needed. The Budget Summary is required for schools funded through the Consolidated Application (ConApp).

Budget Summary

DESCRIPTION	AMOUNT
Total Funds Provided to the School Through the Consolidated Application	$
Total Funds Budgeted for Strategies to Meet the Goals in the SPSA	$251,935.64
Total Federal Funds Provided to the School from the LEA for CSI	$

Other Federal, State, and Local Funds

List the additional Federal programs that the school includes in the schoolwide program. Adjust the table as needed.

Note: If the school is not operating a Title I schoolwide program, this section is not applicable and may be deleted.

Federal Programs	Allocation ($)
Title I	$143,268.90
Title I Part A: Parent Involvement	$1,685.52
Title III	$15,059.51
Title III Immigrant Education Program	$7,828.05

Subtotal of additional federal funds included for this school: $167,841.98

List the State and local programs that the school is including in the schoolwide program. Duplicate the table as needed.

State or Local Programs	Allocation ($)
Donations	$3,000.00
LCFF - Base	$20,000.00
LCFF - Supplemental	$56,093.66
Other	$5,000.00

Subtotal of state or local funds included for this school: $84,093.66

Total of federal, state, and/or local funds for this school: $251,935.64

Budgeted Funds and Expenditures in this Plan

The tables below are provided to help the school track expenditures as they relate to funds budgeted to the school.

Funds Budgeted to the School by Funding Source

Funding Source	Amount	Balance

Expenditures by Funding Source

Funding Source	Amount
Donations	3,000.00
LCFF - Base	20,000.00
LCFF - Supplemental	56,093.66
Other	5,000.00
Title I	143,268.90
Title I Part A: Parent Involvement	1,685.52
Title III	15,059.51
Title III Immigrant Education Program	7,828.05

Expenditures by Budget Reference

Budget Reference	Amount
	2,000.00
1000-1999: Certificated Personnel Salaries	206,200.64
4000-4999: Books And Supplies	37,735.00
5800: Professional/Consulting Services And Operating Expenditures	5,000.00
None Specified	1,000.00

Expenditures by Budget Reference and Funding Source

Budget Reference	Funding Source	Amount
	Donations	2,000.00
None Specified	Donations	1,000.00
1000-1999: Certificated Personnel Salaries	LCFF - Base	20,000.00
1000-1999: Certificated Personnel Salaries	LCFF - Supplemental	56,093.66
5800: Professional/Consulting Services And Operating Expenditures	Other	5,000.00

1000-1999: Certificated Personnel Salaries	Title I	113,268.90
4000-4999: Books And Supplies	Title I	30,000.00
1000-1999: Certificated Personnel Salaries	Title I Part A: Parent Involvement	1,685.52
1000-1999: Certificated Personnel Salaries	Title III	7,324.51
4000-4999: Books And Supplies	Title III	7,735.00
1000-1999: Certificated Personnel Salaries	Title III Immigrant Education Program	7,828.05

Expenditures by Goal

Goal Number	Total Expenditures
Goal 1	166,048.08
Goal 2	37,887.56
Goal 3	20,000.00
Goal 4	6,000.00
Goal 5	22,000.00

School Site Council Membership

California Education Code describes the required composition of the School Site Council (SSC). The SSC shall be composed of the principal and representatives of: teachers selected by teachers at the school; other school personnel selected by other school personnel at the school; parents of pupils attending the school selected by such parents; and, in secondary schools, pupils selected by pupils attending the school. The current make-up of the SSC is as follows:

1 School Principal

3 Classroom Teachers

2 Other School Staff

5 Parent or Community Members

Name of Members	Role
Jennifer Almer-Johnson	Principal
Alex Lucero	Other School Staff
Rima Antounian	Other School Staff
Jaimi Fields	Classroom Teacher
Amy Walker	Classroom Teacher
Anita Moradian	Parent or Community Member
Whitney Wetta	Parent or Community Member
Melissa Ximena Golebiowski	Parent or Community Member
Julia Trostle	Parent or Community Member
Leigh Ann Stewart-Kato	Parent or Community Member
Melissa Waters	Classroom Teacher

At elementary schools, the school site council must be constituted to ensure parity between (a) the principal, classroom teachers, and other school personnel, and (b) parents of students attending the school or other community members. Classroom teachers must comprise a majority of persons represented under section (a). At secondary schools there must be, in addition, equal numbers of parents or other community members selected by parents, and students. Members must be selected by their peer group.

Recommendations and Assurances

The School Site Council (SSC) recommends this school plan and proposed expenditures to the district governing board for approval and assures the board of the following:

The SSC is correctly constituted and was formed in accordance with district governing board policy and state law.

The SSC reviewed its responsibilities under state law and district governing board policies, including those board policies relating to material changes in the School Plan for Student Achievement (SPSA) requiring board approval.

The SSC sought and considered all recommendations from the following groups or committees before adopting this plan:

Signature	Committee or Advisory Group Name
	English Learner Advisory Committee
	Other: School Leadership Team

The SSC reviewed the content requirements for school plans of programs included in this SPSA and believes all such content requirements have been met, including those found in district governing board policies and in the local educational agency plan.

This SPSA is based on a thorough analysis of student academic performance. The actions proposed herein form a sound, comprehensive, coordinated plan to reach stated school goals to improve student academic performance.

This SPSA was adopted by the SSC at a public meeting on May 26, 2026.

Attested:



Principal, Jennifer Almer-Johnson on May 26, 2026

SSC Chairperson, Anita Moradian on May 26, 2026

Instructions

The School Plan for Student Achievement (SPSA) is a strategic plan that maximizes the resources available to the school while minimizing duplication of effort with the ultimate goal of increasing student achievement. SPSA development should be aligned with and inform the Local Control and Accountability Plan (LCAP) process.

This SPSA template consolidates all school-level planning efforts into one plan for programs funded through the Consolidated Application (ConApp) pursuant to California *Education Code* (*EC*) Section 64001 and the Elementary and Secondary Education Act (ESEA) as amended by the Every Student Succeeds Act (ESSA). This template is designed to meet schoolwide program planning requirements.

California's ESSA State Plan supports the state's approach to improving student group performance through the utilization of federal resources. Schools use the SPSA to document their approach to maximizing the impact of federal investments in support of underserved students. The implementation of ESSA in California presents an opportunity for schools to innovate with their federally-funded programs and align them with the priority goals of the school and the local educational agency (LEA) that are being realized under the state's Local Control Funding Formula (LCFF).

The LCFF provides schools and LEAs flexibility to design programs and provide services that meet the needs of students in order to achieve readiness for college, career, and lifelong learning. The SPSA planning process supports continuous cycles of action, reflection, and improvement. Consistent with *EC* 64001(g)(1), the Schoolsite Council (SSC) is required to develop and annually review the SPSA, establish an annual budget, and make modifications to the plan that reflect changing needs and priorities, as applicable.

For questions related to specific sections of the template, please see instructions below.

Instructions: Table of Contents

- Plan Description
- Educational Partner Involvement
- Comprehensive Needs Assessment
- Goals, Strategies/Activities, and Expenditures
- Annual Review
- Budget Summary
- Appendix A: Plan Requirements for Title I Schoolwide Programs
- Appendix B: Select State and Federal Programs

For additional questions or technical assistance related to LEA and school planning, please contact the CDE's Local Agency Systems Support Office, at LCFF@cde.ca.gov.
For programmatic or policy questions regarding Title I schoolwide planning, please contact the LEA, or the CDE's Title I Policy and Program Guidance Office at TITLEI@cde.ca.gov.

Plan Description

Briefly describe the school's plan to effectively meet the ESSA requirements in alignment with the LCAP and other federal, state, and local programs.

Additional CSI Planning Requirements:
Schools eligible for CSI must briefly describe the purpose of this plan by stating that this plan will be used to meet federal CSI planning requirements.

Additional ATSI Planning Requirements:
Schools eligible for ATSI must briefly describe the purpose of this plan by stating that this plan will be used to meet federal ATSI planning requirements.

Educational Partner Involvement

Meaningful involvement of parents, students, and other stakeholders is critical to the development of the SPSA and the budget process. Within California, these stakeholders are referred to as educational partners. Schools must share the SPSA with school site-level advisory groups, as applicable (e.g., English Learner Advisory committee, student advisory groups, tribes and tribal organizations present in the community, as appropriate, etc.) and seek input from these advisory groups in the development of the SPSA.

The Educational Partner Engagement process is an ongoing, annual process. Describe the process used to involve advisory committees, parents, students, school faculty and staff, and the community in the development of the SPSA and the annual review and update.

Additional CSI Planning Requirements:
When completing this section for CSI, the LEA must partner with the school and its educational partners in the development and implementation of this plan.

Additional ATSI Planning Requirements:
This section meets the requirements for ATSI.

Resource Inequities

This section is required for all schools eligible for ATSI and CSI.

Additional CSI Planning Requirements:

- Schools eligible for CSI must identify resource inequities, which may include a review of LEA- and school-level budgeting as a part of the required school-level needs assessment.
- Identified resource inequities must be addressed through implementation of the CSI plan.
- Briefly identify and describe any resource inequities identified as a result of the required school-level needs assessment and summarize how the identified resource inequities are addressed in the SPSA.

Additional ATSI Planning Requirements:

- Schools eligible for ATSI must identify resource inequities, which may include a review of LEA- and school-level budgeting as a part of the required school-level needs assessment.
- Identified resource inequities must be addressed through implementation of the ATSI plan.
- Briefly identify and describe any resource inequities identified as a result of the required school-level needs assessment and summarize how the identified resource inequities are addressed in the SPSA.

Comprehensive Needs Assessment

Referring to the California School Dashboard (Dashboard), identify: (a) any state indicator for which overall performance was in the "Red" or "Orange" performance category AND (b) any state indicator for which performance for any student group was two or more performance levels below the "all student" performance. In addition to Dashboard data, other needs may be identified using locally collected data developed by the LEA to measure pupil outcomes.

SWP Planning Requirements:
When completing this section for SWP, the school shall describe the steps it is planning to take to address these areas of low performance and performance gaps to improve student outcomes.

Completing this section fully addresses all SWP relevant federal planning requirements.

CSI Planning Requirements:
When completing this section for CSI, the LEA shall describe the steps the LEA will take to address the areas of low performance, low graduation rate, and/or performance gaps for the school to improve student outcomes.

Completing this section fully addresses all relevant federal planning requirements for CSI.

ATSI Planning Requirements:
Completing this section fully addresses all relevant federal planning requirements for ATSI.

Goals, Strategies/Activities, and Expenditures

In this section, a school provides a description of the annual goals to be achieved by the school. This section also includes descriptions of the specific planned strategies/activities a school will take to meet the identified goals, and a description of the expenditures required to implement the specific strategies and activities.

Additional CSI Planning Requirements:
When completing this section to meet federal planning requirements for CSI, improvement goals must also align with the goals, actions, and services in the LEA's LCAP.

Additional ATSI Planning Requirements:
When completing this section to meet federal planning requirements for ATSI, improvement goals must also align with the goals, actions, and services in the LEA's LCAP.

Goal

Well-developed goals will clearly communicate to educational partners what the school plans to accomplish, what the school plans to do in order to accomplish the goal, and how the school will know when it has accomplished the goal. A goal should be specific enough to be measurable in either quantitative or qualitative terms. Schools should assess the performance of their student groups when developing goals and the related strategies/activities to achieve such goals. SPSA goals should align to the goals and actions in the LEA's LCAP.

A goal is a broad statement that describes the desired result to which all strategies/activities are directed. A goal answers the question: What is the school seeking to achieve?

It can be helpful to use a framework for writing goals such the S.M.A.R.T. approach.
A S.M.A.R.T. goal is:

- **S**pecific,
- **M**easurable,
- **A**chievable,
- **R**ealistic, and
- **T**ime-bound.

A level of specificity is needed in order to measure performance relative to the goal as well as to assess whether it is reasonably achievable. Including time constraints, such as milestone dates, ensures a realistic approach that supports student success.
A school may number the goals using the "Goal #" for ease of reference.

Additional CSI Planning Requirements:
Completing this section as described above fully addresses all relevant federal CSI planning requirements.

Additional ATSI Planning Requirements:
Completing this section as described above fully addresses all relevant federal ATSI planning requirements.

Identified Need

Describe the basis for establishing the goal. The goal should be based upon an analysis of verifiable state data, including local and state indicator data from the Dashboard and data from the School Accountability Report Card, including local data voluntarily collected by districts to measure pupil achievement.

Additional CSI Planning Requirements:
Completing this section as described above fully addresses all relevant federal CSI planning requirements.

Additional ATSI Planning Requirements:
Completing this section as described above fully addresses all relevant federal ATSI planning requirements.

Annual Measurable Outcomes

Identify the metric(s) and/or state indicator(s) that the school will use as a means of evaluating progress toward accomplishing the goal. A school may identify metrics for specific student groups. Include in the

baseline column the most recent data associated with the metric or indicator available at the time of adoption of the SPSA. The most recent data associated with a metric or indicator includes data reported in the annual update of the SPSA. In the subsequent Expected Outcome column, identify the progress the school intends to make in the coming year.

Additional CSI Planning Requirements:
When completing this section for CSI, the school must include school-level metrics related to the metrics that led to the school's eligibility for CSI.

Additional ATSI Planning Requirements:
Completing this section as described above fully addresses all relevant federal ATSI planning requirements.

Strategies/Activities Table

Describe the strategies and activities being provided to meet the goal.
Complete the table as follows:

- Strategy/Activity #: Number the strategy/activity using the "Strategy/Activity #" for ease of reference.
- Description: Describe the strategy/activity.
- Students to be Served: Identify in the Strategy/Activity Table either All Students or one or more specific student groups that will benefit from the strategies and activities. ESSA Section 1111(c)(2) requires the schoolwide plan to identify either "All Students" or one or more specific student groups, including socioeconomically disadvantaged students, students from major racial and ethnic groups, students with disabilities, and English learners.
- Proposed Expenditures: List the amount(s) for the proposed expenditures.
  Proposed expenditures that are included more than once in a SPSA should be indicated as a duplicated expenditure and include a reference to the goal and strategy/activity where the expenditure first appears in the SPSA. Pursuant to *EC* Section 64001(g)(3)(C), proposed expenditures, based on the projected resource allocation from the governing board or governing body of the LEA, to address the findings of the needs assessment consistent with the state priorities including identifying resource inequities which may include a review of the LEA's budgeting, its LCAP, and school-level budgeting, if applicable.
- Funding Sources: List the funding source(s) for the proposed expenditures. Specify the funding source(s) using one or more of the following: LCFF, Federal (if Federal, identify the Title and Part, as applicable), Other State, and/or Local.

Planned strategies/activities address the findings of the comprehensive needs assessment consistent with state priorities and resource inequities, which may have been identified through a review of the LEA's budgeting, its LCAP, and school-level budgeting, if applicable.

Additional CSI Planning Requirements:
- When completing this section for CSI, this plan must include evidence-based interventions and align to the goals, actions, and services in the LEA's LCAP.
- When completing this section for CSI, this plan must address through implementation, identified resource inequities, which may have been identified through a review of LEA- and school-level budgeting.

Note: Federal school improvement funds for CSI shall not be used in schools identified for TSI or ATSI. In addition, funds for CSI shall not be used to hire additional permanent staff.

Additional ATSI Planning Requirements:
- When completing this section for ATSI, this plan must include evidence-based interventions and align with the goals, actions, and services in the LEA's LCAP.

- When completing this section for ATSI, this plan must address through implementation, identified resource inequities, which may have been identified through a review of LEA- and school-level budgeting.
- When completing this section for ATSI, at a minimum, the student groups to be served shall include the student groups that are consistently underperforming, for which the school received the ATSI designation.

Note: Federal school improvement funds for CSI shall not be used in schools identified for ATSI. Schools eligible for ATSI do not receive funding but are required to include evidence-based interventions and align with the goals, actions, and services in the LEA's LCAP.

Annual Review

In the following Goal Analysis prompts, identify any material differences between what was planned and what actually occurred as well as significant changes in strategies/activities and/or expenditures from the prior year. This annual review and analysis should be the basis for decision-making and updates to the plan.

Goal Analysis

Using actual outcome data, including state indicator data from the Dashboard, analyze whether the planned strategies/activities were effective in achieving the goal. Respond to the prompts as instructed. Respond to the following prompts relative to this goal.

- Describe the overall implementation and effectiveness of the strategies/activities to achieve the articulated goal.
- Briefly describe any major differences between the intended implementation and/or material difference between the budgeted expenditures to implement the strategies/activities to meet the articulated goal.
- Describe any changes that will be made to the goal, expected annual measurable outcomes, metrics/indicators, or strategies/activities to achieve this goal as a result of this analysis and analysis of the data provided in the Dashboard, as applicable. Identify where those changes can be found in the SPSA.

Note: *If the school is in the first year of implementing the goal, the Annual Review section is not required and this section may be left blank and completed at the end of the year after the plan has been executed.*

Additional CSI Planning Requirements:

- When completing this section for CSI, any changes made to the goals, annual measurable outcomes, metrics/indicators, or strategies/activities, shall meet the federal CSI planning requirements.
- CSI planning requirements are listed under each section of the Instructions. For example, as a result of the Annual Review and Update, if changes are made to a goal(s), see the Goal section for CSI planning requirements.

Additional ATSI Planning Requirements:

- When completing this section for ATSI, any changes made to the goals, annual measurable outcomes, metrics/indicators, or strategies/activities, shall meet the federal ATSI planning requirements.
- ATSI planning requirements are listed under each section of the Instructions. For example, as a result of the Annual Review and Update, if changes are made to a goal(s), see the Goal section for ATSI planning requirements.

Budget Summary

In this section, a school provides a brief summary of the funding allocated to the school through the ConApp and/or other funding sources as well as the total amount of funds for proposed expenditures described in the SPSA. The Budget Summary is required for schools funded through the ConApp.

Note: *If the school is not operating a Title I schoolwide program, this section is not applicable and may be deleted.*

Additional CSI Planning Requirements:

- From its total allocation for CSI, the LEA may distribute funds across its schools that are eligible for CSI to support implementation of this plan. In addition, the LEA may retain a portion of its total allocation to support LEA-level expenditures that are directly related to serving schools eligible for CSI.

Note: *CSI funds may not be expended at or on behalf of schools not eligible for CSI.*

Additional ATSI Planning Requirements:
Note: *Federal funds for CSI shall not be used in schools eligible for ATSI.*

Budget Summary Table

A school receiving funds allocated through the ConApp should complete the Budget Summary Table as follows:

- **Total Funds Provided to the School Through the ConApp:** This amount is the total amount of funding provided to the school through the ConApp for the school year. The school year means the fiscal year for which a SPSA is adopted or updated.
- **Total Funds Budgeted for Strategies to Meet the Goals in the SPSA:** This amount is the total of the proposed expenditures from all sources of funds associated with the strategies/activities reflected in the SPSA. To the extent strategies/activities and/or proposed expenditures are listed in the SPSA under more than one goal, the expenditures should be counted only once.

A school receiving funds from its LEA for CSI should complete the Budget Summary Table as follows:

- **Total Federal Funds Provided to the School from the LEA for CSI:** This amount is the total amount of funding provided to the school from the LEA for the purpose of developing and implementing the CSI plan for the school year set forth in the CSI LEA Application for which funds were received.

Appendix A: Plan Requirements

Schoolwide Program Requirements

This School Plan for Student Achievement (SPSA) template meets the requirements of a schoolwide program plan. The requirements below are for planning reference.
A school that operates a schoolwide program and receives funds allocated through the ConApp is required to develop a SPSA. The SPSA, including proposed expenditures of funds allocated to the school through the ConApp, must be reviewed annually and updated by the Schoolsite Council (SSC). The content of a SPSA must be aligned with school goals for improving student achievement.

Requirements for Development of the Plan

I. The development of the SPSA shall include both of the following actions:
   A. Administration of a comprehensive needs assessment that forms the basis of the school's goals contained in the SPSA.
      1. The comprehensive needs assessment of the entire school shall:
         a. Include an analysis of verifiable state data, consistent with all state priorities as noted in Sections 52060 and 52066, and informed by all indicators described in Section 1111(c)(4)(B) of the federal Every Student Succeeds Act, including pupil performance against state-determined long-term goals. The school may include data voluntarily developed by districts to measure pupil outcomes (described in the Identified Need).
         b. Be based on academic achievement information about all students in the school, including all groups under §200.13(b)(7) and migratory children as defined in section 1309(2) of the ESEA, relative to the State's academic standards under §200.1 to:
            i. Help the school understand the subjects and skills for which teaching and learning need to be improved.
            ii. Identify the specific academic needs of students and groups of students who are not yet achieving the State's academic standards.
            iii. Assess the needs of the school relative to each of the components of the schoolwide program under §200.28.
            iv. Develop the comprehensive needs assessment with the participation of individuals who will carry out the schoolwide program plan.
            v. Document how it conducted the needs assessment, the results it obtained, and the conclusions it drew from those results.
   B. Identification of the process for evaluating and monitoring the implementation of the SPSA and progress towards accomplishing the goals set forth in the SPSA (described in the Expected Annual Measurable Outcomes and Annual Review and Update).

Requirements for the Plan

II. The SPSA shall include the following:
   A. Goals set to improve pupil outcomes, including addressing the needs of student groups as identified through the needs assessment.
   B. Evidence-based strategies, actions, or services (described in Strategies and Activities)

1. A description of the strategies that the school will be implementing to address school needs, including a description of how such strategies will:
    a. Provide opportunities for all children including each of the subgroups of students to meet the challenging state academic standards
    b. Use methods and instructional strategies that:
        i. Strengthen the academic program in the school,
        ii. Increase the amount and quality of learning time, and
        iii. Provide an enriched and accelerated curriculum, which may include programs, activities, and courses necessary to provide a well-rounded education.
    c. Address the needs of all children in the school, but particularly the needs of those at risk of not meeting the challenging State academic standards, so that all students demonstrate at least proficiency on the State's academic standards through activities which may include:
        i. Strategies to improve students' skills outside the academic subject areas;
        ii. Preparation for and awareness of opportunities for postsecondary education and the workforce;
        iii. Implementation of a schoolwide tiered model to prevent and address problem behavior;
        iv. Professional development and other activities for teachers, paraprofessionals, and other school personnel to improve instruction and use of data; and
        v. Strategies for assisting preschool children in the transition from early childhood education programs to local elementary school programs.

C. Proposed expenditures, based on the projected resource allocation from the governing board or body of the LEA (may include funds allocated via the ConApp, federal funds, and any other state or local funds allocated to the school), to address the findings of the needs assessment consistent with the state priorities, including identifying resource inequities, which may include a review of the LEAs budgeting, it's LCAP, and school-level budgeting, if applicable (described in Proposed Expenditures and Budget Summary). Employees of the schoolwide program may be deemed funded by a single cost objective.

D. A description of how the school will determine if school needs have been met (described in the Expected Annual Measurable Outcomes and the Annual Review and Update).
    1. Annually evaluate the implementation of, and results achieved by, the schoolwide program, using data from the State's annual assessments and other indicators of academic achievement;
    2. Determine whether the schoolwide program has been effective in increasing the achievement of students in meeting the State's academic standards, particularly for those students who had been furthest from achieving the standards; and
    3. Revise the plan, as necessary, based on the results of the evaluation, to ensure continuous improvement of students in the schoolwide program.

E. A description of how the school will ensure parental involvement in the planning, review, and improvement of the schoolwide program plan (described in Educational Partner Involvement and/or Strategies/Activities).
F. A description of the activities the school will include to ensure that students who experience difficulty attaining proficient or advanced levels of academic achievement standards will be provided with effective, timely additional support, including measures to:
    1. Ensure that those students' difficulties are identified on a timely basis; and
    2. Provide sufficient information on which to base effective assistance to those students.
G. For an elementary school, a description of how the school will assist preschool students in the successful transition from early childhood programs to the school.
H. A description of how the school will use resources to carry out these components (described in the Proposed Expenditures for Strategies/Activities).
I. A description of any other activities and objectives as established by the SSC (described in the Strategies/Activities).

Authority Cited: Title 34 of the *Code of Federal Regulations* (34 *CFR*), sections 200.25-26, and 200.29, and sections-1114(b)(7)(A)(i)-(iii) and 1118(b) of the ESEA. *EC* sections 64001 et. seq.

Appendix B: Plan Requirements for School to CSI/ATSI Planning Requirements

For questions or technical assistance related to meeting federal school improvement planning requirements, please contact the CDE's School Improvement and Support Office at SISO@cde.ca.gov.

Comprehensive Support and Improvement

The LEA shall partner with educational partners (including principals and other school leaders, teachers, and parents) to locally develop and implement the CSI plan for the school to improve student outcomes, and specifically address the metrics that led to eligibility for CSI (Educational Partner Involvement).

The CSI plan shall:

1. Be informed by all state indicators, including student performance against state-determined long-term goals (S*ections: Goal, Identified Need, Expected Annual Measurable Outcomes, Annual Review and Update, as applicable*);

2. Include evidence-based interventions (*Sections: Strategies/Activities, Annual Review and Update, as applicable*) (For resources related to evidence-based interventions, see the U.S. Department of Education's "Using Evidence to Strengthen Education Investments" at https://www2.ed.gov/fund/grant/about/discretionary/2023-non-regulatory-guidance-evidence.pdf);

   Non-Regulatory Guidance: Using Evidence to Strengthen Education Investments

3. Be based on a school-level needs assessment (Se*ctions: Goal, Identified Need, Expected Annual Measurable Outcomes, Annual Review and Update, as applicable*); and

4. Identify resource inequities, which may include a review of LEA- and school-level budgeting, to be addressed through implementation of the CSI plan (S*ections: Goal, Identified Need, Expected Annual Measurable Outcomes, Planned Strategies/Activities; and Annual Review and Update, as applicable*).

Authority Cited: Sections 1003(e)(1)(A), 1003(i), 1111(c)(4)(B), and 1111(d)(1) of the ESSA.

Single School Districts and Charter Schools Eligible for ESSA School Improvement

Single school districts (SSDs) or charter schools that are eligible for CSI, TSI, or ATSI, shall develop a SPSA that addresses the applicable requirements above as a condition of receiving funds (*EC* Section 64001[a] as amended by Assembly Bill 716, effective January 1, 2019).

However, a SSD or a charter school may streamline the process by combining state and federal requirements into one document which may include the LCAP and all federal planning requirements, provided that the combined plan is able to demonstrate that the legal requirements for each of the plans is met (*EC* Section 52062[a] as amended by AB 716, effective January 1, 2019).

Planning requirements for single school districts and charter schools choosing to exercise this option are available in the LCAP Instructions.

Authority Cited: *EC* sections 52062(a) and 64001(a), both as amended by AB 716, effective January 1, 2019.

CSI Resources

For additional CSI resources, please see the following links:

- **CSI Planning Requirements** (see Planning Requirements tab): https://www.cde.ca.gov/sp/sw/t1/csi.asp
- **CSI Webinars**: https://www.cde.ca.gov/sp/sw/t1/csiwebinars.asp
- **CSI Planning Summary for Charters and Single-school Districts**: https://www.cde.ca.gov/sp/sw/t1/csiplansummary.asp

Additional Targeted Support and Improvement

A school eligible for ATSI shall:

1. Identify resource inequities, which may include a review of LEA- and school-level budgeting, which will be addressed through implementation of its TSI plan (*Sections: Goal, Identified Need, Expected Annual Measurable Outcomes, Planned Strategies/Activities, and Annual Review and Update, as applicable*).

Authority Cited: Sections 1003(e)(1)(B), 1003(i), 1111(c)(4)(B), and 1111(d)(2)(c) of the ESSA.

Single School Districts and Charter Schools Eligible for ESSA School Improvement

Single school districts (SSDs) or charter schools that are eligible for CSI, TSI, or ATSI, shall develop a SPSA that addresses the applicable requirements above as a condition of receiving funds (*EC* Section 64001[a] as amended by Assembly Bill [AB] 716, effective January 1, 2019).

However, a SSD or a charter school may streamline the process by combining state and federal requirements into one document which may include the local control and accountability plan (LCAP) and all federal planning requirements, provided that the combined plan is able to demonstrate that the legal requirements for each of the plans is met (*EC* Section 52062[a] as amended by AB 716, effective January 1, 2019).

Planning requirements for single school districts and charter schools choosing to exercise this option are available in the LCAP Instructions.

Authority Cited: *EC* sections 52062(a) and 64001(a), both as amended by AB 716, effective January 1, 2019.

ATSI Resources:

For additional ATSI resources, please see the following CDE links:

- ATSI Planning Requirements (see Planning Requirements tab): https://www.cde.ca.gov/sp/sw/t1/tsi.asp
- ATSI Planning and Support Webinar: https://www.cde.ca.gov/sp/sw/t1/documents/atsiplanningwebinar22.pdf
- ATSI Planning Summary for Charters and Single-school Districts: https://www.cde.ca.gov/sp/sw/t1/atsiplansummary.asp

Appendix C: Select State and Federal Programs

For a list of active programs, please see the following links:

- Programs included on the ConApp: https://www.cde.ca.gov/fg/aa/co/
- ESSA Title I, Part A: School Improvement: https://www.cde.ca.gov/sp/sw/t1/schoolsupport.asp
- Available Funding: https://www.cde.ca.gov/fg/fo/af/

Updated by the California Department of Education, October 2023

School Site Council Agenda
May 26th, 2026
6:00 p.m. via ZOOM

✓	1a. School Plan Development – Data Analysis & Needs Assessment	✓	2a. EL Program Design/Development		3a. School Safety Plan Development & Approval
✓	1b. School Plan Development – School Goals & Improvement Activities	✓	2b. EL – Data Analysis & Needs Assessment		3b. Helping Students at Home (Academic & Social Skills)
✓	1c. School Plan – Monitoring & Evaluation		2c. EL – Monitoring & Evaluation		3c. Training – Roles and Responsibilities
✓	1d. School Plan – Budget Development & Monitoring	✓	2d. EL – Budget Development & Monitoring		3d. Election of SSC/ELAC/DELAC Members
	1e. School Plan Approval		2e. EL - Reclassification		3e. Parent Involvement Policy – Development, Approval & Distribution
✓	1f. Title I Program Description		2f. EL – Parent Training		3f. School Compact – Development, Approval & Distribution
			2g. EL - Language Census Discussion (R30)		3g. Academic Standards
	1h. Effective Communication w/Parents		2h. EL - School Attendance Discussion	✓	3h. CAASPP Assessment Results
	1i. Title I Parent Trainings/Parent Policy	✓	2i. Parent Input on Title I, III, EIA/LEP		3i. Uniform Complaint Procedures

I. Welcome and introductions-
II. Call to order
Approval of proposed agenda

III. Transition from TAS SWP for Title I

IV. Thoughts for Next Year - New Members

V. Questions

VI. Meeting Adjournment

School Site Council Minutes
May 26th, 2026
6:00 p.m. via ZOOM

✓	1a. School Plan Development – Data Analysis & Needs Assessment	✓	2a. EL Program Design/Development		3a. School Safety Plan Development & Approval
✓	1b. School Plan Development – School Goals & Improvement Activities	✓	2b. EL – Data Analysis & Needs Assessment		3b. Helping Students at Home (Academic & Social Skills)
✓	1c. School Plan – Monitoring & Evaluation		2c. EL – Monitoring & Evaluation		3c. Training – Roles and Responsibilities
✓	1d. School Plan – Budget Development & Monitoring	✓	2d. EL – Budget Development & Monitoring		3d. Election of SSC/ELAC/DELAC Members
	1e. School Plan Approval		2e. EL - Reclassification		3e. Parent Involvement Policy – Development, Approval & Distribution
✓	1f. Title I Program Description		2f. EL – Parent Training		3f. School Compact – Development, Approval & Distribution
			2g. EL - Language Census Discussion (R30)		3g. Academic Standards
	1h. Effective Communication w/Parents		2h. EL - School Attendance Discussion	✓	3h. CAASPP Assessment Results
	1i. Title I Parent Trainings/Parent Policy	✓	2i. Parent Input on Title I, III, EIA/LEP		3i. Uniform Complaint Procedures

I. Welcome and introductions-

II. Call to order

Approval of proposed agenda

- **Jaimi Field motioned to approve agenda**
- **Julie Trostle seconded the motion, everyone approved**

III. Transition from TAS SWP for Title I

8/8 voted

- **Jaimi Fields motioned to change SPSA goals**
- **Julia Trostle seconded the motion, everyone approved**

IV. Thoughts for Next Year - New Members

-

V. Questions

- **Will we review 3A at this meeting? - Julia Trostle**
  - **Not at this meeting, we will discuss this topic at next year's 2nd meeting**
  - **There have been some district visits to review ADA compliance and improve accessibility. Changes are proposed to improve accessibility.**
- **Would we want to have a science fair?**
  - **Upper grades students do a science fair and in the past there has been a larger fair planned by parents.**
  - **Jaimi - Mrs. Dobbin and Mrs. Fields did a science fair this year, there is a website called "Science Buddies" that is a great resource**
  - **Amy Walker suggested possibly doing a buddy activity**

- Melissa Waters suggested having lower grades do a whole class science activity based on what they are learning
- Leigh Ann and Anita would be interested in planning a science fair

- Have we paid for enrichment programs through Title I funds?
  - No, we have not
  - Can we diversify the dates when enrichment programs are offered?
    - Yes, we can look into that.

VI. Meeting Adjournment - 6:45pm

Recommendations and Assurances

The School Site Council (SSC) recommends this school plan and proposed expenditures to the district governing board for approval and assures the board of the following:

The SSC is correctly constituted and was formed in accordance with district governing board policy and state law.

The SSC reviewed its responsibilities under state law and district governing board policies, including those board policies relating to material changes in the School Plan for Student Achievement (SPSA) requiring board approval.

The SSC sought and considered all recommendations from the following groups or committees before adopting this plan:

Signature	Committee or Advisory Group Name
	English Learner Advisory Committee
	Other: School Leadership Team

The SSC reviewed the content requirements for school plans of programs included in this SPSA and believes all such content requirements have been met, including those found in district governing board policies and in the local educational agency plan.

This SPSA is based on a thorough analysis of student academic performance. The actions proposed herein form a sound, comprehensive, coordinated plan to reach stated school goals to improve student academic performance.

This SPSA was adopted by the SSC at a public meeting on May 26, 2026.

Attested:

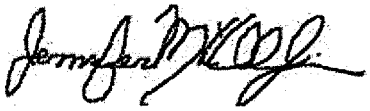	Principal, Jennifer Almer-Johnson on May 26, 2026
	SSC Chairperson, Anita Moradian on May 26, 2026

Recommendations and Assurances

The School Site Council (SSC) recommends this school plan and proposed expenditures to the district governing board for approval and assures the board of the following:

The SSC is correctly constituted and was formed in accordance with district governing board policy and state law.

The SSC reviewed its responsibilities under state law and district governing board policies, including those board policies relating to material changes in the School Plan for Student Achievement (SPSA) requiring board approval.

The SSC sought and considered all recommendations from the following groups or committees before adopting this plan:

Signature	Committee or Advisory Group Name
	English Learner Advisory Committee
	Other: School Leadership Team

The SSC reviewed the content requirements for school plans of programs included in this SPSA and believes all such content requirements have been met, including those found in district governing board policies and in the local educational agency plan.

This SPSA is based on a thorough analysis of student academic performance. The actions proposed herein form a sound, comprehensive, coordinated plan to reach stated school goals to improve student academic performance.

This SPSA was adopted by the SSC at a public meeting on May 26, 2026.

Attested:

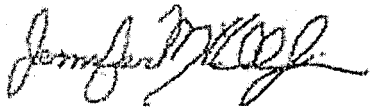

Principal, Jennifer Almer-Johnson on May 26, 2026

SSC Chairperson, Anita Moradian on May 26, 2026

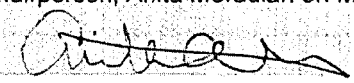

Recommendations and Assurances

The School Site Council (SSC) recommends this school plan and proposed expenditures to the district governing board for approval and assures the board of the following:

The SSC is correctly constituted and was formed in accordance with district governing board policy and state law.

The SSC reviewed its responsibilities under state law and district governing board policies, including those board policies relating to material changes in the School Plan for Student Achievement (SPSA) requiring board approval.

The SSC sought and considered all recommendations from the following groups or committees before adopting this plan:

Signature	Committee or Advisory Group Name
Alex Lucero Digitally signed by Alex Lucero Date: 2026.06.16 14:58:51 -07'00'	English Learner Advisory Committee
	Other: School Leadership Team

The SSC reviewed the content requirements for school plans of programs included in this SPSA and believes all such content requirements have been met, including those found in district governing board policies and in the local educational agency plan.

This SPSA is based on a thorough analysis of student academic performance. The actions proposed herein form a sound, comprehensive, coordinated plan to reach stated school goals to improve student academic performance.

This SPSA was adopted by the SSC at a public meeting on May 26, 2026.

Attested:

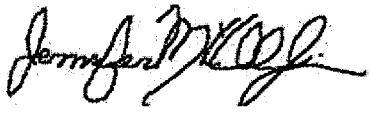

Principal, Jennifer Almer-Johnson on May 26, 2026

SSC Chairperson, Anita Moradian on May 26, 2026

Burbank Unified School District
Instructional Services

REPORT TO THE BOARD

TO: Members of the Board of Education

FROM: Peter Knapik, Assistant Superintendent of Educational Services

PREPARED BY: Robyn Anders, Director of Instructional Technology & Accountability

SUBMITTED BY: Glenda Diaz Nolasco, Administrative Secretary

DATE: June 25, 2026

SUBJECT: Approval of the 2026-2027 Consolidated Application for Categorical Programs

---

Background:
For over two decades, the California Department of Education (CDE) has required that school districts submit a Consolidated Application to receive funds for federal and State categorical programs. The application for these funds has been changed in several ways. First, the application is submitted online through the web-based Consolidated Application Reporting System (CARS). Second, the CARS system has two data collection reporting periods: Winter and Spring/Summer. Third, because of annual CDE changes to the application format, submission periods for the application are often delayed.

The Spring/Summer application is a collection of data about pupil participation and details regarding prior year expenditures of the prior year. The District qualifies for Title I, Part A, Basic Grant (Helping Disadvantaged Children), Title II, Part A (Teacher Quality and Professional Development), Title III, Part A (Program for English Learner (EL) Students), and Title IV Student Support and Academic Achievement Program. In 2025-2026, BUSD did not have enough growth in Immigrant population to receive Title III Immigrant Education Program funds.

Federal guidelines also allow local non-profit private schools to receive federal funding, along with Burbank Unified programs. Historically, Burbank private schools have participated in the Title II program.

The next application, the winter data collection, includes budget information, scheduled to be submitted to the CDE in February 2027 after district funding entitlements are received from the CDE. The winter data reporting will indicate the number of pupil participants in each of these programs, the District allocation by program, and delineate planned District and school site funding allocations for each of the federal and State programs for the Consolidated Application.

Discussion and Issues:
At this time, the District has estimated allocations that will be available for these programs for 2026-2027.

- $2,198,260 for Title 1, Part A: Helping Disadvantaged Children K-8;
- $331,517 for Title II, Part A: Teacher Quality K-12;
- $223,227 for Title III Limited English Proficient K-12;
- $0 For Title III Immigrant; and
- $152,748 for Title IV Student Support.

Burbank Unified School District qualifies for and will request funding in the following areas. (See Attachment):
For Qualifying Students:

- Title I, Part A, Helping Disadvantaged Children
- Title II, Part A, Teacher Quality and Professional Development
- Title III, Part A, Program for English Learner Students
- ~~Title III, Immigrant Education Program~~
- Title IV, Student Support

The Superintendent's signature on the Consolidated Application serves as certification that the District will observe all the applicable rules and regulations and that all the assurances are accepted as the basic legal conditions for the operation of these programs.

Fiscal Impact:
Approval of this application by the California Department of Education will provide funding for the listed programs for the 2026-2027 school year.

Recommendation:
Peter Knapik, Assistant Superintendent of Educational Services, recommends that the Board of Education approve the submission of the 2026-2027 Consolidated Application for Funding Categorical Programs, June Submission, and that authority to sign and submit the application to the California Department of Education be exercised pursuant to BUSD—AR 3314, as presented.

Attachment A

2026-2027 Consolidated Application Program Descriptions

Program	Program Description
Title I, Part A, Helping Disadvantaged Children	Title I, Part A provides supplemental funds to be used to narrow the educational gap between disadvantaged children and other children in those areas where the highest concentration of children from low-income families attend school.
Title II, Part A- Teacher Quality and Professional Development	Title II focuses on upgrading the expertise of teachers and other school staff to enable them to be "highly qualified" so that they may teach all children in the core academic subjects. Funds support sustained, high-quality professional development directed to achieve high performance related to the State content standards. Funds under this section may be used to carry out effective approaches to reducing class size with highly qualified teachers to improve educational achievement for both regular and special needs children with particular consideration given to reducing class size in the early elementary grades.
Title III, Part A Program for English Learner (EL) Students	Title III authorizes funding for supplementary programs and services for EL students. Required activities include the provision of instruction and instructional support services related to English language development and academic progress in the core curriculum in a manner that allows EL students to meet grade level and graduation requirements. Programs also must provide staff development opportunities to school staff assigned to EL student populations. Title III funds may also be used for a variety of instructional support, curricular development, parental involvement, and related EL student program activities.
~~Title III, Immigrant Education Program~~	~~Title III Immigrant Education funding supplements instructional opportunities for immigrant students and their families. Allowable activities include family literacy, parent and family outreach, and training activities designed to assist parents and families to become active participants in the education of their children; interventions for immigrant children and youth; acquisition of curricular materials, educational software, and technologies to be used in the program carried out with funds; and allowable direct administration expenses for a fiscal year may not exceed two percent of such funds for the cost of administering this subpart.~~
Title IV, Student Support	Title IV provides funding to improve students' academic achievement by increasing school district capacity to provide all students with access to a well-rounded education; improve school conditions for students learning and improve the use of technology to improve academic achievement and digital literacy of all students.

Burbank Unified School District
Instructional Services

REPORT TO THE BOARD

TO:	Members of the Board of Education
FROM:	Peter Knapik, Assistant Superintendent of Educational Services
PREPARED BY:	Peter Knapik, Assistant Superintendent of Educational Services
SUBMITTED BY:	Glenda Diaz Nolasco, Administrative Secretary
DATE:	June 25, 2026
SUBJECT:	Approval of Federal Addendum Annual Revision for 2025-2026

Background:
The Every Student Succeeds Act (ESSA) of 2015, a federal law, requires school districts that apply for federal funding to complete a federal addendum, have the federal addendum adopted by the Board of Education, and submit the federal addendum to the California State Department of Education.

The California Department of Education initially approved the federal addendum in July 2018. As required by the Department, the district reviews it annually for updates and submits it to the Burbank Board of Education for approval.

Title I

In Burbank USD, any school with more than 35% of its students designated as socioeconomically disadvantaged is eligible to receive Title I funds. The following schools will receive Title I funds for 2025-2026: Disney Elementary School, Emerson Elementary School, McKinley Elementary School, Miller Elementary School, Providencia Elementary School, Washington Elementary School, Huerta Middle School, Luther Burbank Middle School, and Muir Middle School. Since the District receives Title I funds, it is identified as a Title I District.

According to the Every Student Succeeds Act, Title I schools and Title I districts must meet annual proficiency targets in English Language Arts (ELA) and Mathematics described in the Local Control Accountability Plan (LCAP). Proficiency targets are measured by the California Assessment of Student Performance and Progress (CAASPP). The CAASPP assessment system includes the Smarter Balanced test. CAASPP was suspended in the spring of 2020 and 2021. The CAASPP was administered in Spring 2022, 2023, 2024, 2025, and 2026.

Title I schools that do not meet these proficiency targets may be identified as the lowest 5% of performing schools in the State and enter into a State program for comprehensive support and improvement (CSI). California will use the California School Dashboard to determine school eligibility for CSI.

School eligibility is based on the following two categories of schools:

1. Low graduation rate

    - High schools with a graduation rate of less than 67 percent averaged over two years (Beginning with the 2019 Dashboard)

    - High schools with a graduation rate of less than 68 percent averaged over two years (Beginning with 2019 Dashboard; Adopted by the State Board of Education on September 11, 2019)

2. Not less than the lowest-performing five percent of Title I schools

    - Schools with all red indicators
    - Schools with all red but one indicator of another color
    - Schools with all red and orange indicators
    - Schools with five or more indicators where the majority are red

For 2025-2026, no Burbank schools are in comprehensive support and improvement (CSI).

Title II Professional Development Funding for Principals and Teachers

This funding is for the professional development of administrators and teachers.

Title III English Learners and Immigrant Students Programs

Under the federal ESSA (Every Student Succeeds Act), Title III provides supplemental funding to districts for programs designed to help students receiving English Learner (EL) and/or Immigrant Student services. The focus of both programs is to help students attain English proficiency and meet/exceed the State's academic and content standards. Title III accountability as posted on the California Dashboard is a set of annual academic performance goals established for each district to hold them accountable for the progress and performance of ELs.

Title IV Student Support and Academic Achievement

Title IV funding provides students access to a well-rounded education, improving conditions for learning, and improving academic achievement through digital literacy.

District-Wide Goals for 2025-2026
1.0 Students will be career/college ready via high-quality instruction

Discussion/Issues:
The State accountability plan for ESSA, which includes Title I, II, III, and IV, was originally approved by the Department of Education in December 2020.

In the spring of 2024, the State of California used the California Assessment of Student Performance and Progress System (CAASPP) to measure students' academic achievement in grades 3, 4, 5, 6, 7, 8, and 11, including Title I and Title III students. It will disaggregate data by subgroup data for the accountability system.

Testing results were posted on the California Dashboard in December 2025, though the school district received some of the data earlier.

In January 2024, the California Department of Education (CDE) identified ATSI (Additional Targeted Support & Improvement) schools based on subgroup performance for either a single criterion or multiple criteria, i.e., ELA, Math, EL Progress, Chronic Absenteeism, Graduation Rate, Suspension Rate, or Participation Rate. To "qualify" for ATSI, the subgroup has a "Very Low" or "Low" performance level (as posted on the California Dashboard) and the subgroup size needs to be 30 or more students.

The grey cells indicate poor performance or ATSI using two years of data. This data is in the federal addendum in the Prioritizing Funding section. This is a three year designation by CDE. Edison and Miller Elementary were identified mainly due to families opting out of State testing.

	ELA (includes subgroup count)	Math (includes subgroup count)	EL Progress (includes subgroup count)	Chronic Absenteeism (includes subgroup count)	Participation Rate (includes subgroup count)
Edison		SWD – Declined 18.4 points			
Miller			EL – Declined 8.4 points		

In January 2025, the California Department of Education (CDE) identified ATSI (Additional Targeted Support & Improvement) schools based on subgroup performance for either a single criterion or multiple criteria, i.e., ELA, Math, EL Progress, Chronic Absenteeism, Graduation Rate, Suspension Rate, or Participation Rate. To "qualify" for ATSI, the subgroup has a "Very Low" or "Low" performance level (as posted on the California Dashboard) and the subgroup size needs to be 30 or more students. This is a three year designation. Emerson Elementary was identified and was mainly due to families opting out of State testing.

	ELA (includes subgroup count)	Math (includes subgroup count)	EL Progress (includes subgroup count)	Chronic Absenteeism (includes subgroup count)	Participation Rate (includes subgroup count)
Emerson				SWD – Red Performance Level	

The other material change to the federal addendum is the Educator Equity section. The update is the teacher credential status with counts for 2025-2026 by school. The update shared that four "ineffective" teachers are on permits, 30 "inexperienced" teachers who have two or fewer years of experience, and 40 "out-of-field" teachers though they have an exemption from the Board through local assignment approval.

Recommendation:
Peter Knapik, Assistant Superintendent of Educational Services, recommends that the Board of Education approve the revised Federal Addendum for 2025-2026, as presented.

LCAP Federal Addendum for Title I, II, III, and IV 2025-2026

Burbank Unified (19643370000000)

Original Submitted and CDE Approved July 2018

Status: **CDE Approved July 2018**
All your sections have been approved by CDE reviewers! You are now finished with this submission system.

LEA Contact Name:	**Peter Knapik**
LEA Contact Email:	**PeterKnapik@burbankusd.org**
LEA Contact Phone:	**818-729-4482**

Instructions

The LCAP Federal Addendum is meant to supplement the LCAP to ensure that eligible LEAs have the opportunity to meet the Local Educational Agency (LEA) Plan provisions of the Every Student Succeeds Act (ESSA).

The LCAP Federal Addendum Template must be completed and submitted to the California Department of Education (CDE) to apply for ESSA funding. LEAs are encouraged to review the LCAP Federal Addendum annually with their LCAP, as ESSA funding should be considered in yearly strategic planning.

Each provision for each program must be addressed unless the provision does not apply to the LEA.

In addressing these provisions, LEAs must provide a narrative that addresses the provision **within the LCAP Federal Addendum Template.**

Under State Priority Alignment, state priority numbers are provided to demonstrate where an ESSA provision aligns with state priorities. This is meant to assist LEAs in determining where

ESSA provisions may already be addressed in the LEA's LCAP, as it demonstrates the LEA's efforts to support the state priorities.

The LEA must address the Strategy and Alignment prompts provided below. Please describe the LEA's plan for making the best use of federal ESEA resources in alignment with other federal, state, and local programs as described in the LEA's LCAP.

Strategy

Explain the LEA's strategy for using federal funds to supplement and enhance local priorities or initiatives funded with state funds, as reflected in the LEA's LCAP. This shall include describing the rationale/evidence for the selected use(s) of federal funds within the context of the LEA's broader strategy reflected in the LCAP.

Response from Burbank Unified:

The Burbank Unified School District has designed its instructional program based on the following districtwide LCAP goals:
- Improve learning and achievement for targeted subgroups of students
- Improve learning and achievement for all students
- Continue to align all instruction and learning to California State Standards
- Expand programs to prepare students for college, post-secondary education, training, and/or the workplace from preschool through Adult Education
- Develop and implement a comprehensive professional development plan for all employees
- Create a positive school climate by maintaining a safe environment and developing a sense of belonging for all students and staff
- Provide all students with access to technology in the classroom
- Develop new communication and collaborative strategies with parents, students, employees, and the community

Title I: Helping Disadvantaged Children K-8

Each goal has actions designed to carry out the intent of the goal. Federal Title funds are used to supplement and enhance programs that are designed to address the learning needs of students. BUSD allocates Title I funds by grade span, focusing on use at our elementary and middle schools. This targeted approach is designed to address the achievement gap that widens for low-income students and students with disabilities as students matriculate. By providing more intensive support during grades TK- 8, we can better equip struggling students to meet or exceed State academic standards to prepare for high school and success in college and career.

School sites provide Tier II and III interventions in English Language Arts and Mathematics to provide students the time and opportunity to build a conceptual understanding of the Standards. Concept attainment leads to the better application of the Standards. The implementation of professional learning communities where teachers analyze data and plan instructional improvements to increase student success is another approach to examining individual and

student group achievement and actual work samples. Teachers then design strategies to rectify deficits in student learning.

Parents/guardians will benefit from Title I workshops and activities to improve their child's academic achievement. Students benefit from workshops and informational meetings provided to parents and guardians so that families can support student learning at home.

Title II: Teacher Quality K-12

Title II funds supplement district funds used for professional development for teachers, principals, and other school leaders. Professional development is currently focused on closing the achievement gap and improving the performance of underperforming student groups: improving our Multi-Tiered Systems of Support (interventions); raising the expectations for all student groups; designing lessons that engage students at all performance levels; optimizing technology to support teaching and learning.

Title III: Limited English Proficient K-12

BUSD continues to offer intervention, professional development, and parent workshops and activities. Each school designs its program with the requirements of Title III and is approved by District staff. The DELAC and ELACs continue to provide input on interventions, professional development, and parent workshops and activities. The Title III Master Plan, annual district/school English Learner/Immigrant plans, and school plans detail the ways to improve student achievement. Through the School Site Council, English Learner Advisory Councils, District English Learner Advisory Council, and Title I Advisory Council, needs are identified, actions are developed, programs are designed, programs and spending decisions are monitored, and adjustments are made.

Title IV: Student Support

Burbank USD will apply the Whole School, Whole Community, Whole Child approach and provide district-wide professional development and parent education to support the implementation of evidence-based student programs and strategies based upon identified needs and stakeholder input. In summary, to improve the academic achievement of disadvantaged, ELs, immigrant children, homeless children, youth, and students with disabilities, the district shall use federal funds to provide eligible students with supplementary services based on the California State Standards and assist students in attaining proficiency as measured by District and State assessments. Needs are identified from the District and State assessments and the observations made by teachers who carry out the daily instructional program. Supplementary services may include the use of instructional assistants for intervention programs, supplemental materials based on the learning needs of students, and targeted programs to address the learning needs of specific student subgroups who need specialized learning opportunities. Extended learning time may include before, after, and summer opportunities. Eligible students also benefit from administrators, teachers, and classified discussions about student data, and professional development for administrators, teachers, and classified staff.

ORIGINAL APPROVED BY CDE 2018/NO REVISION

Alignment

Describe the efforts that the LEA will take to align the use of federal funds with activities funded by state and local funds and, as applicable, across different federal grant programs.

Response from Burbank Unified:

LCAP-funded strategies are determined based on the needs assessments identified by data analysis aimed at the causal factors for poor student performance. Stakeholders review data and develop action plans to address those needs. Stakeholder groups include parents, students, community members, staff members, and employee groups. Stakeholder input comes from groups who focus on high-need students through the School Site Council, the English Learner Advisory Committee, the District English Learner Advisory Committee, and the Title I Advisory Committee. Monitoring metrics are detailed in the LCAP and in school plans so that alignment is achieved with the same assessment system and goals of achievement. Once needs are identified, funding is allocated to carry out the action. Federal funds supplement State and local services that provide a base or foundation. Federal services are supplementary and complement the activities paid for with State and local funds. Federal funds are used to provide supplementary services to students, and professional development to administrators, teachers, and classified staff. Parent engagement include informational meetings on how parents can help at home, State Standards, assessments, curriculum, as well as governance such as School Site Council, District English Learner Advisory Council, Title I Advisory Council, and English Learner Advisory Council.

ORIGINAL APPROVED BY CDE/NO REVISION

Every Student Succeeds Act (ESSA) Provisions Addressed Within the LCAP

Within the LCAP an LEA is required to describe its goals and the specific actions to achieve those goals, for each of the LCFF state priorities. In an approvable LCAP, it will be apparent from the descriptions of the goals, actions, and services how an LEA is acting to address the following ESSA provisions through the aligned LCFF state priorities and/or the state accountability system.

Title I, Part A

Monitoring Student Progress Towards Meeting Challenging State Academic Standards

ESSA SECTION	STATE PRIORITY ALIGNMENT
1112(b)(1) (A–D)	1, 2, 4, 7, 8 *(as applicable)*

Describe how the LEA will monitor students' progress in meeting the challenging state academic standards by:

A. developing and implementing a well-rounded program of instruction to meet the academic needs of all students;
B. identifying students who may be at risk for academic failure;
C. providing additional educational assistance to individual students the LEA or school determines need help in meeting the challenging State academic standards; and
D. identifying and implementing instructional and other strategies intended to strengthen academic programs and improve school conditions for student learning.

Overuse in Discipline Practices that Remove Students from the Classroom

ESSA SECTION	STATE PRIORITY ALIGNMENT
1112(b)(11)	6 *(as applicable)*

Describe how the LEA will support efforts to reduce the overuse of discipline practices that remove students from the classroom, which may include identifying and supporting schools with high rates of discipline, disaggregated by each of the student groups, as defined in Section 1111(c)(2).

Career Technical and Work-based Opportunities

ESSA SECTION	STATE PRIORITY ALIGNMENT
1112(b)(12)(A–B)	2, 4, 7 *(as applicable)*

If determined appropriate by the LEA, describe how such an agency will support programs that coordinate and integrate:

A. academic and career and technical education content through coordinated instructional strategies, that may incorporate experiential learning opportunities and promote skills attainment important to in-demand occupations or industries in the State; and
B. work-based learning opportunities that provide students in-depth interaction with industry professionals and, if appropriate, academic credit.

Title II, Part A

Title II, Part A Activities

ESSA SECTION	STATE PRIORITY ALIGNMENT
2102(b)(2)(A)	1, 2, 4 *(as applicable)*

Provide a description of the activities to be carried out by the LEA under this Section and how these activities will be aligned with challenging State academic standards.

Title III, Part A

Parent, Family, and Community Engagement

ESSA SECTION	STATE PRIORITY ALIGNMENT
3116(b)(3)	3, 6 *(as applicable)*

Describe how the eligible entity will promote parent, family, and community engagement in the education of English learners.

ESSA Provisions Addressed in the Consolidated Application and Reporting System

An LEA addresses the following ESSA provision as part of completing annual reporting through the Consolidated Application and Reporting System (CARS).

Title I, Part A

Poverty Criteria

ESSA SECTION	STATE PRIORITY ALIGNMENT
1112(b)(4)	N/A

Describe the poverty criteria that will be used to select school attendance areas under Section 1113.

ESSA Provisions Not Addressed in the LCAP

For the majority of LEAs, the ESSA provisions on the following pages do not align with state priorities. **Each provision for each program provided on the following pages must be addressed**, unless the provision is not applicable to the LEA. In addressing these provisions, LEAs must provide a narrative that addresses the provision **within this addendum**.

As previously stated, the CDE emphasizes that the LCAP Federal Addendum should not drive LCAP development. ESSA funds are supplemental to state funds, just as the LCAP Federal Addendum supplements your LCAP. LEAs are encouraged to integrate their ESSA funds into their LCAP development as much as possible to promote strategic planning of all resources; however, this is not a requirement. In reviewing the LCAP Federal Addendum, CDE staff will evaluate the LEA's responses to the ESSA plan provisions. There is no standard length for the responses. LEAs will be asked to clarify insufficient responses during the review process.

Title I, Part A

Every Student Succeeds Act (ESSA) Provisions Not Addressed in the LCAP

For the majority of LEAs, the ESSA provisions identified on this page do not align with state priorities. **Each provision identified on this page must be addressed** unless the provision is not applicable to the LEA. If the provision is not applicable to the LEA, respond with "N/A".

The CDE emphasizes that the LCAP Federal Addendum should not drive LCAP development. ESSA funds are supplemental to state funds, just as the LCAP Federal Addendum supplements your LCAP. LEAs are encouraged to integrate their ESSA funds into their LCAP development as much as possible to promote strategic planning of all resources; however, this is not a requirement. In reviewing the LCAP Federal Addendum, CDE staff will evaluate the LEA's responses to the ESSA plan provisions. There is no standard length for the responses. LEAs will be asked to clarify insufficient responses during the review process.

To address these provisions, provide a narrative addressing each provision in the appropriate field below:

Parent and Family Engagement

ESSA SECTIONS 1112(b)(3) and 1112(b)(7)
Describe how the LEA will carry out its responsibility under Section 1111(d).

Response from Burbank Unified:

N/A

ORIGINAL APPROVED BY CDE/NO REVISION

Describe the strategy the LEA will use to implement effective parent and family engagement under Section 1116.

Response from Burbank Unified:

Assistance to parents [ESSA Section 1116(e)(1)]

Annual Title I parent meetings provide an overview of the State Standards and the elementary and middle school curriculum. This information increases parents' understanding of elementary and middle school expectations and requirements. Parent conferences are held at the first and second trimesters to discuss student progress. Teachers are available beyond those two conferences, too. Family Nights, like math, are held at elementary and middle schools. These Family Nights cover the curriculum and standards and include at-home strategies for parents. These sessions include training on accessing the online components of the English language arts and math curriculum.

CAASPP score reports are mailed to parents within 30 days of district receipt. Parents also receive an explanation of their child's performance on CAASPP. Parents may ask questions through email, phone contact, or scheduled meetings. School webpages and the district webpage have resources for parents regarding State standards and district expectations.

Training and materials for parents to improve achievement [ESSA Section 1116(e)(2)] are provided in all schools. Parents of TK/K students receive information on standards, curriculum, assessments, helping at home, and community resources. Economic status does not affect parents' opportunity to support their child's learning.

Principals, support staff, and teachers at all grade levels, from Kindergarten through high school, and secondary school counselors provide group and individual training to parents about the student information system. Parents have access to attendance and grade information.

Staff education on working with parents [ESSA Section 1116(e)(3)] Parent participation at school activities, meetings, parent conferences, and curriculum nights, demonstrates effectiveness. Principals, staff, and parents often facilitate these events.

General and Special Education staff receive training and coaching on how to work with parents including the IEP process and other programs. Program specialists model this work with staff, demonstrating how to provide extensive, clear explanations that are free of jargon, especially when students are initially qualifying and parents with the IEP process or other specialized programs. Translations are provided.

Parent involvement programs and activities [ESSA Section 1116(e)(4)] Title I principals have reached out effectively to families of children who are eligible for Title I services. Principals use multiple communication methods, monitor what has been effective, and make improvements every year. The District and schools collaborate with community-based organizations.

Communication with parents in a format and language parents can understand [ESSA Section 1116(e)(5)]

Information on school and parent programs, the Title I Compact, meetings, and other activities are sent to parents of children participating in Title I services through multiple avenues. Parents receive e-mails and phone calls. BUSD uses Blackboard services which support multiple languages. The program also provides text-to-speech translation, where it reads a message sent in English to the parent in their home language. Information is also sent by student mail. Administrators and bilingual Family Liaisons also communicate with parents.

Support for parental involvement activities requested by parents [ESSA Section 1116(e)(14)]

Schools provide Title I meetings, parent education, special activities, and the LCAP consultation process. Schools promote and advertise volunteer opportunities. Parents have requested support in learning more about State Standards and the core curriculum, and interventions.

Parent consultation has impacted the LCAP and our plans for the use of Title I funds. Informed parent participation [ESSA Section 1116(f)]

Consultation with parents drives parent participation planning. BUSD has an English Learner population of 1,716 students. Mass communication provides messages in English, Spanish, and Armenian. Our website has the capability for multiple languages. The website follows ADA requirements to our website. Our schools are accessible to people who use mobility devices. Translators are available.

Alignment required in Section 1116 to LCAP stakeholder engagement process.

Our LCAP stakeholder engagement process is detailed in our LCAP. In summary, we consult with a broad range of stakeholders about their priorities in a series of meetings, supplemented with additional information gathering, communication, and focus groups. BUSD holds meetings to provide input on their priorities for the LCAP. Principals discuss the LCAP in SSC meetings and other parent meetings. Parent groups plan and review the LCAP goals. The processes above involve all schools.

ORIGINAL APPROVED BY CDE 2018/NO REVISION

Schoolwide Programs, Targeted Support Programs, and Programs for Neglected or Delinquent Children

ESSA SECTIONS 1112(b)(5) and 1112(b)(9)
Describe, in general, the nature of the programs to be conducted by the LEA's schools under sections 1114 and 1115 and, where appropriate, educational services outside such schools for children living in local institutions for neglected or delinquent children, and for neglected and delinquent children in community day school programs.

Response from Burbank Unified:

Title I schools develop school plans by the SSC that include a comprehensive needs assessment, student achievement data, goals, allowable expenditures, monitoring of achievement, accountability, professional development, parent engagement, and school policy. Title I Advisory meetings are also held bi-monthly to monitor the Title I program, technical assistance, and problem-solving. BUSD district office supports schools by ensuring compliance (FPM), monitoring activities and expenditures holding the school accountable for achievement, and Board policy among other requirements.

SWP schools take the following steps to upgrade the entire educational program:

• A comprehensive needs assessment of the entire school about State standards and the educational needs of students and staff

• Schoolwide strategies for all children to meet State standards (core curriculum delivery, monitoring, assessments, interventions)

• Effective methods and instructional strategies based on scientifically-based research (Hattie, et al.)

• Extended learning time, extended school year, before and after school, and summer programs focused on individual students and subgroups in reading/language arts and mathematics

• Addressing the needs of underserved students, low-achieving students, and those at risk of not meeting State standards

• Instruction by qualified teachers and strategies to attract and keep such teachers

• High quality and ongoing professional development for teachers, principals, paraprofessionals, parents, and other staff in reading/language arts, math (core curriculum, supplemental materials, assessment, data debriefs, interventions)

• Strategies to increase parental involvement in reading/language arts, mathematics, understanding assessment results, report cards, a-g requirements, graduation requirements, college financing

• Assistance to preschool children in transitioning from early childhood programs to elementary school programs outlining expectations, curriculum, assessments, monitoring practices

• Timely and effective additional assistance to students who experience difficulty mastering State standards (Tier I classroom, Tier II interventions, Tier III specialized services)

• For targeted assistance programs, the identification of students most at risk of failing to meet State standards. K-2 students are identified from district assessments who score at or below proficiency (70%). Students in grades 3-5 are identified from CAASPP and district assessments and have a score below proficiency (not meeting standard or below standard).

• Effective methods and instructional strategies based on scientifically-based research (Hattie, et al.)

• Interventions, extended learning time, extended school year, before and after school, and summer programs focused on individual students and subgroups in reading/language arts and mathematics

• Strategies that minimize removing children from the regular classroom during regular school hours for instruction

• Instruction by highly qualified teachers

• Professional development opportunities for teachers, principals, and paraprofessionals, including if appropriate, pupil services personnel, parents, and other staff in reading/language arts, math (core curriculum, supplemental materials, assessment, data debriefs, interventions)

• Strategies to increase parental involvement in reading/language arts, mathematics, understanding assessment results, report cards, a-g requirements, graduation requirements, college financing

Neglected or delinquent: N/A

ORIGINAL APPROVED BY CDE 2018/NO REVISION

Address the ESSA provision:

Describe how teachers and school leaders, in consultation with parents, administrators, paraprofessionals, and specialized instructional support personnel, in schools operating a targeted assistance school program under Section 1115, will identify the eligible children most in need of services under this part.

Response from Burbank Unified:

There are no Title I Targeted Assistance Schools. If there were, students would be identified based on low achievement in Reading/Language Arts and/or Mathematics. Staff is provided professional development to increase their understanding of State standards, the core curriculum, specific strategies, assessment monitoring, and interventions. Students below standard are provided interventions in R/LA and/or Math. Parents are also provided information on State standards, curriculum, teaching strategies, interventions, and ways parents can help at home. Staff is also training on effective communication with parents, effective parent conferences, and communicating assessment data.

ORIGINAL APPROVED BY CDE 2018/NO REVISION

Homeless Children and Youth Services

ESSA SECTION 1112(b)(6)
Describe the services the LEA will provide homeless children and youths, including services provided with funds reserved under Section 1113(c)(3)(A), to support the enrollment, attendance, and success of homeless children and youths, in coordination with the services the LEA is

providing under the McKinney-Vento Homeless Assistance Act (42 United States Code 11301 et seq.).

Response from Burbank Unified:

Federal and State law mandates that all school districts identify homeless students annually. BUSD uses the Student Housing Questionnaire (SHQ) to identify eligible homeless students and provide support services. During the 2023-2024 school year, the Burbank Unified School District identified 47 students from 30 families experiencing homelessness via the online enrollment system, school site referrals, and subsequent Student Housing Questionnaires submitted.

The SHQ establishes the parent/student's rights under the federal McKinney-Vento Homeless Assistance Act. Pursuant to the McKinney-Vento Homeless Assistance Act (42 USC. Sec. 11301 et seq.)

The education subtitle of the McKinney-Vento Act was reauthorized by the Every Student Succeeds Act of 2015. This law entitles all homeless school-aged children to equal access to the same free, appropriate public education that is provided to non-homeless students. Accordingly, schools are required to identify homeless students, inform them of their rights, remove barriers to enrollment, attendance, or academic success, and not stigmatize homeless students.

Students are identified through the SHQ (Student Housing Questionnaire) which is required to be included in every online enrollment system or enrollment packet and distributed to all students annually with emergency cards. BUSD has made the annual information part of online Parent Data Confirmation. Families self-identify their current nighttime residence during this process and the Student Services Homeless Liaison follows up with the family and obtains an SHQ. The BUSD liaison obtains an SHQ and refers the family to District resources and community supports. Parents can self-identify via the SHQ at any time during the school year at their school site or directly with the Student Services Homeless Education Program. If they are new to the program, they are referred to the District liaison for services and to complete an SHQ.

Per federal law, all schools are responsible for the annual identification of homeless students. Therefore, principals and office managers shall ensure that their school site annually identifies all homeless students and refers families to the District liaison to accurately input student information, and indicate the nighttime residence in Aeries for accounting purposes. Additionally, the liaison is required to provide public notice of the educational rights and protections of students experiencing homelessness.

In addition, the designated LEA Homeless Liaison will support the identified specialized student population and work with school site staff to ensure compliance with district policy and federal mandates regarding:

1. Identification
2. Immediate enrollment
3. Appropriate educational placement

4. Proper withdrawal from school; awarding and transfer of credits; records and grades;

5. Awareness and training

6. Consultation and collaboration with school counselors

7. Transportation

8. Allows partial credit

The BUSD Homeless Education Program provides:

• School enrollment; equal access to educational and meal programs; other support services

• Professional development; educational rights

• Removal of enrollment barriers, including barriers related to missed application or enrollment deadlines, fines, or fees; records required for enrollment, including immunization or other required health records, proof of residency, or other documentation; or academic records, including documentation for credit transfer

• Technical assistance to staff on proper identification, enrollment, and service needs of students and families; ensuring the privacy of student records

• Transportation, backpacks, school supplies, hygiene kits, and referrals for emergency clothing/shoes

• Medical, dental, and mental health referrals, in addition to other school/community services

• Educating students/parents on their educational rights

• Promote parent participation in school activities

• Assist unaccompanied youth with enrollment procedures, educational/vocational placement options, and linkage to community resources such as job placement services, post-secondary educational programs, and housing resources

• Advocacy services for parents and students during school-related educational meetings, SSTs, IEPs, SARTs, or SARBs

• Mediation in school enrollment disputes

• Assistance to specialized populations of homeless students, including preschoolers, homeless teen parents, children with special needs, and unaccompanied youth

• Identification of students who may be eligible for the state AB 1806 graduation exception and support for graduation expenses and testing for secondary schools

Assist with the completion of FAFSA and other financial aid applications through at-risk counselors for college

APPROVED BY CDE 2018/Revised 2022-23

Student Transitions

ESSA SECTIONS 1112(b)(8) and 1112(b)(10) (A–B)
Describe, if applicable, how the LEA will support, coordinate, and integrate services provided under this part with early childhood education programs at the LEA or individual school level, including plans for the transition of participants in such programs to local elementary school programs.

Response from Burbank Unified:

Student transition activities are held at the:

- preschool/prekindergarten to elementary school

- elementary school to middle school

- middle school to high school

The District's early education programs maintain assessments of children's learning strengths and needs. Articulation and a smooth transition from prekindergarten to transitional kindergarten/kindergarten are critical to learners' continued educational success. Articulation and transition are the responsibility of both the sending early education program and the receiving elementary school.

Preschool children enrolled in Early Childhood Education programs including Early Education Centers (EECs) and California State Preschools (CSPP) are provided orientation meetings at the elementary schools. The preschool alerts elementary schools that the entering student has attended a Burbank Unified School District early education program before enrolling in the elementary school.

For children enrolled in Early Childhood Education programs a planned transitional meeting will also be provided with the preschool teacher providing:

- A copy of the child's Pre-K Developmental Profile.

- A signed copy of the Permission to Transfer Preschool Information to Elementary School form.

For children enrolled in Early Childhood Education programs, parents/guardians must give permission for information to be transferred to the elementary school by:

1. Completing a Permission to Transfer Preschool Information to Elementary School. A copy of the permission form should be placed in the student's cumulative folder and a copy kept on file at the sending preschool.

2. Each pupil's information shall be kept in the elementary school's cumulative record folder in accordance with district policy.

3. Each pupil transitioning from the Special Education preschool services will also have a Special Education folder with the cumulative record folder.

ORIGINAL APPROVED BY CDE 2018/NO REVISION

Describe, if applicable, how the LEA will implement strategies to facilitate effective transitions for students from middle grades to high school and from high school to postsecondary education including:

A. through coordination with institutions of higher education, employers, and other local partners; and
B. through increased student access to early college high school or dual or concurrent enrollment opportunities, or career counseling to identify student interests and skills.

Response from Burbank Unified:

Middle School Orientation

Middle schools provide orientation days before the beginning of school to support elementary school students' transition to middle school. Students become familiar with the campus, receive their textbooks, get a tour of the school, and learn how to navigate the school and the school's system for communication and problem-solving. Students will engage in team-building activities to get to know their classmates, faculty, and staff. Some middle schools extend orientation over a few days and include academic preparation for English language arts and math, study skills, and any necessary testing.

Summer Bridge Programs

Middle school and high school summer bridge programs build student academic preparation for the English Language Arts, mathematics, a-g courses introduce college and career readiness skills, and organizational skills, and provide social-emotional support to assist with the transition from elementary to middle school and middle school to high school. The bridge programs help students make connections, build relationships, and ease the transition for students into middle and high school.

Concurrent Enrollment

BUSD has entered into agreements with community colleges to expand concurrent enrollment opportunities for high school students. The BUSD Board of Education and specific community colleges have agreed on a matrix of community college courses that are aligned with the California State Standards of high school courses. These courses may meet graduation requirements, add an enriched curriculum, and offer additional options for high school students who are pursuing a high school diploma, career preparation, and a smooth transition to college. The Division of Instruction has supported each school with funding college textbooks. In addition, students earn college credit.

ORIGINAL APPROVED BY CDE 2018/NO REVISION

Additional Information Regarding Use of Funds Under this Part

ESSA SECTION 1112(b)(13) (A–B)
Provide any other information on how the LEA proposes to use funds to meet the purposes of this part, and that the LEA determines appropriate to provide, which may include how the LEA will:

A. assist schools in identifying and serving gifted and talented students; and
B. assist schools in developing effective school library programs to provide students an opportunity to develop digital literacy skills and improve academic achievement.

Response from Burbank Unified:

A. Assist schools in identifying and serving gifted and talented students:

The Gifted and Talented Program does not receive Title I funding. The GATE Office and District schools, however, do receive LCAP funding and may choose to use funds to support their efforts to provide gifted/talented students with access to high-quality differentiated instruction that addresses their unique talents and advances their achievement. Funds may be used to provide staff access to professional learning opportunities focusing on instructional practices such as differentiated instruction, enrichment, acceleration, and curriculum compacting. Additionally, a school's funding can be used to increase the site's ability to refer/identify and serve students who are historically underrepresented in gifted and talented programs, i.e., low-income, African American, Latino, and English learners. Accordingly, funds can be used to increase gifted/talented learners' access to and engagement in high-quality educational opportunities that prepare them for rigorous coursework and advance their college and career readiness.

The Gifted and Talented program is guided by a BUSD Board-approved plan that gives guidance to the decision-making for the GATE program. A new identification system was implemented in 2016-2017 to better identify underrepresented students and is proving to be effective.

B. assist schools in developing effective school library programs to provide students an opportunity to develop digital literacy skills and improve academic achievement.

Additionally, personnel of the library program is not funded by Title I. District Office staff works directly with schools to provide all students with access to school libraries. A direct relationship exists between student achievement and access to appropriately staffed, well-stocked school libraries. This correlation has been documented in multiple longitudinal studies. Access to such libraries is a necessary tool for student achievement and essential to the successful implementation of State Standards.

District staff provides services such as:

- Assisting school site personnel on library media center issues and the development of library input teams at schools

- Training new teacher-librarians, library aides, school personnel, and District staff - Providing staff development

- Supporting and maintaining Destiny and the EBSCO Digital Library consisting of paid and free online content

- Coordinating school issues such as library media center schematics, collection development, weeding, and staffing

- Advising schools regarding modifications of library media centers - Evaluating, selecting, and developing collections, and cataloging

- Assisting in the development of California Model Library Standards-based courses and lessons

- Training, reviewing, and providing information for library-related grants and funding sources The District follows the California Model School Library Standards (2010) To graduate students who are college-prepared, career and life-ready, and life-long learners, BUSD provides each student with equitable access by centrally funding school library staffing and providing funding for up-to-date print and electronic collections.

STAFFING: The staffing standard as defined in the California Model School Library Standards is defined as a team consisting of a classified librarian, e.g., a classified position such as a library coordinator. The District provides funding to elementary schools for library aides based on student enrollment. In addition, schools may use their Title I funds to extend the hours of library aides. The number of computers or devices varies from school to school, especially as many schools continue to expand access to devices at school. Usually, the schedule for students and class visits is most flexible at secondary schools, especially those staffed by a classified library coordinator. At the elementary school level, the schedule is usually a fixed one for class library visits. At the elementary level, there is also the issue of supervising students by credentialed staff during instructional time.

CLASSIFIED LIBRARIAN RESPONSIBILITIES: District staff provide training and professional development to librarians focusing on media and information literacy and research skills. Librarians work with whole classes – including Special Education – small groups of students, and individual students. As funding allows, librarians, engage in collection development, weeding, ordering, cataloging, and supervising the work of student aides and library aides. Librarians provide book talks to students, as well as a “good book to read.”

RESOURCES: The District Office promotes diverse library collections that support the State Standards and frameworks, that provide appropriate age- and grade-level materials that support language needs, and, that provide for all students’ cognitive needs. The District provides the Digital Library for all students for use at school and via remote access.

ORIGINAL APPROVED BY CDE 2018/NO REVISION

Title I, Part A, Educator Equity

Every Student Succeeds Act (ESSA) Provisions Not Addressed in the LCAP

For the majority of LEAs, the ESSA provisions identified on this page do not align with state priorities. **Each provision identified on this page must be addressed** unless the provision is not applicable to the LEA. If the provision is not applicable to the LEA, respond with "N/A".

The CDE emphasizes that the LCAP Federal Addendum should not drive LCAP development. ESSA funds are supplemental to state funds, just as the LCAP Federal Addendum supplements your LCAP. LEAs are encouraged to integrate their ESSA funds into their LCAP development as much as possible to promote strategic planning of all resources; however, this is not a requirement. In reviewing the LCAP Federal Addendum, CDE staff will evaluate the LEA's responses to the ESSA plan provisions. There is no standard length for the responses. LEAs will be asked to clarify insufficient responses during the review process.

To address these provisions, provide a narrative addressing each provision in the appropriate field below:

Educator Equity

ESSA SECTION 1112(b)(2)
Describe how the LEA will identify and address, as required under State plans as described in Section 1111(g)(1)(B), any disparities that result in low-income students and minority students being taught at higher rates than other students by ineffective, inexperienced, or out-of-field teachers.

Response from Burbank Unified:

The district uses the process for data collection outlined on the CDE website at https://www.cde.ca.gov/pd/ee/peat.asp. Our first step was to pull district and school data from the DataQuest from 2024-25. Excel spreadsheets were created. Data was reviewed by cabinet-level administrators that include HR, C and I, PD, State/Federal Programs, Business Services, ELs, SpEd, Assessments, Early Ed, CBEDS/CALPADS, BTSA, teacher, and classified representatives. Data included counts and percentages of low-income students, minority students, ineffective teachers, inexperienced teachers, and out-of-field teachers. The Data discussions concluded that the district does not have any significant gaps across all schools. Classrooms are staffed with fully qualified and appropriately credentialed teachers.

In May 2026, there were four ineffective (emergency permit, waiver) teachers across the district. Two speech and language pathologists working at multiple schools. One teacher at Edison and one teacher at Roosevelt Elementary Schools.

Are minority students taught at higher rates by ineffective teachers? No. BUSD has four ineffective teachers. Two speech and language pathologists working at multiple schools. One teacher at Edison and one teacher at Roosevelt Elementary Schools. The differences in rates among the schools at the elementary and middle school levels are minimal.

Ineffective (Emergency Permit/Waiver) Teacher Count with Minority Count

Disney ES – 0 (75%)
Edison ES – 1 (61%)
Emerson ES – 0 (35%)
Harte ES – 0 (35%)
Jefferson ES – 0 (37%)
McKinley ES – 0 (76%)
Miller ES – 0 (28%)
Providencia ES – 0 (71%)
Roosevelt ES – 1 (50%)
Stevenson ES – 0 (55%)
Washington ES – 0 (59%)

Huerta MS - 0 (62%)
Luther Burbank MS – 0 (61%)
Muir MS – 0 (32%)

Burbank HS – 0 (31%)
Burroughs HS – 0 (35%)
Monterey HS – 0 (26%)
Independent Learning Academy – 0 (32%)

Are low-income students taught at higher rates by ineffective teachers? No. BUSD has four ineffective teachers. Two speech and language pathologists working at multiple schools (37% SED). One teacher at Edison (25% SED) and one teacher at Roosevelt Elementary (17% SED) Schools. The differences in rates among the schools at the elementary and middle school levels are minimal.

Ineffective (Emergency Permit/Waiver) Teacher Count with Socio-Economically Disadvantaged Percentage

Disney ES – 0 (39%)
Edison ES – 1 (25%)
Emerson ES – 0 (42%)
Harte ES – 0 (25%)
Jefferson ES – 0 (27%)
McKinley ES – 0 (44%)
Miller ES – 0 (50%)

Providencia ES – 0 (56%)
Roosevelt ES – 1 (17%)
Stevenson – 0 (26%)
Washington ES – 0 (57%)

Huerta MS - 0 (45%)
Luther Burbank MS – 0 (42%)
Muir MS – 0 (44%)

Burbank HS – 0 (38%)
Burroughs HS – 0 (26%)
Monterey HS – 0 (47%)
Independent Learning Academy – 0 (32%)

Are minority students taught at higher rates by inexperienced teachers (two or fewer years of experience)? No. In the district as a whole, BUSD has 3.9% (30/760) inexperienced first and second-year teachers. BUSD has 18 elementary; 9 middle; and 3 comprehensive high school inexperienced teachers. There is no pattern of ineffective teachers with socio-economically disadvantaged students at the elementary, middle, or high school levels. All teachers are appropriately credentialed, supported by new teacher induction, and onsite colleagues as they develop their profession. Vacancies mainly occur with teachers leaving the district for personal reasons and due to teacher retirements.

Inexperienced Teacher Count with Minority Count

Disney ES – 3 (75%)
Edison ES – 1 (61%)
Emerson ES – 0 (35%)
Harte ES – 4 (35%)
Jefferson ES – 1 (37%)
McKinley ES – 2 (76%)
Miller ES – 1 (28%)
Providencia ES – 0 (71%)
Roosevelt ES – 3 (50%)
Stevenson ES – 0 (55%)
Washington ES – 3 (59%)

Huerta MS - 2 (62%)
Luther Burbank MS – 4 (61%)
Muir MS – 3 (32%)

Burbank HS – 2 (31%)
Burroughs HS – 1 (35%)
Monterey HS – 0 (26%)
Independent Learning Academy – 0 (32%)

At elementary, the percentages of minority students range from 28% (Miller) to 75% (Disney). Miller has one inexperienced teacher. Disney has three inexperienced teachers. The majority of teachers are expected to continue. At the middle school level, the range of 32% minority at Muir Middle with three inexperienced teachers and 61% minority at Luther Burbank Middle with four inexperienced teachers. All seven are expected to continue. Burbank High has a 31% minority with two inexperienced teachers. Burroughs High has a 35% minority with one inexperienced teacher. The three teachers are expected to continue. There is no pattern of inexperienced teachers with high minority enrollment at the elementary, middle, or high school levels. All teachers are appropriately credentialed, supported by new teacher induction, and onsite colleagues as they develop their profession. Vacancies mainly occur with teachers leaving the district for personal reasons and due to teacher retirements.

Are low-income students taught at higher rates by inexperienced teachers? No. In the district as a whole, BUSD has 5.2% (40/760) inexperienced first and second-year teachers. BUSD has 18 elementary; 9 middle; and 3 comprehensive high school inexperienced teachers.

Inexperienced (Two Years or Less) Teacher Count with Socio-Economically Disadvantaged Percentage
Disney ES – 3 (39%)
Edison ES – 1 (25%)
Emerson ES – 0 (42%)
Harte ES – 4 (25%)
Jefferson ES – 1 (27%)
McKinley ES – 2 (44%)
Miller ES – 1 (50%)
Providencia ES – 0 (56%)
Roosevelt ES – 3 (17%)
Stevenson – 0 (26%)
Washington ES – 3 (57%)

Huerta MS - 2 (45%)
Luther Burbank MS – 4 (42%)
Muir MS – 3 (44%)

Burbank HS – 2 (38%)
Burroughs HS – 1 (26%)
Monterey HS – 0 (47%)

Independent Learning Academy – 0 (32%)

At elementary, the percentages of low-income students range from 17% (Roosevelt) to 57% (Washington). Roosevelt has three inexperienced teachers. Washington has three inexperienced teachers. The inexperienced teachers are expected to continue. At the middle school level the range of 44% low-income at Muir Middle with three inexperienced teachers and 42% low-income at Luther Burbank Middle with four inexperienced teachers. All seven are expected to continue. Burbank High has a 38% low income with two inexperienced teachers. Burroughs High has a 26% low income with one inexperienced teacher. The three teachers are expected to continue. There is no pattern of inexperienced teachers with socio-economically disadvantaged students at the elementary, middle, or high school level. All teachers are appropriately credentialed, supported by new teacher induction, and onsite colleagues as they develop their profession.

There are 40 out-of-field (Local Assignment Board-approved) teachers in the district. Burbank High has eight, Burroughs High has eight, Monterey High has five, and the Independent Study Learning Academy has five. Luther MS has two. Huerta MS has five. Muir MS has six. Stevenson Elementary has one. The out-of-field designation is due to teachers teaching multiple subjects though Bord approved for special assignments.

Are minority students taught at higher rates by out-of-field teachers? No. In the district as a whole, BUSD has 5.2% (40/760) out-of-field teachers. BUSD has the following distribution of inexperienced teachers: 1 at elementary; 13 at middle; 16 at comprehensive high schools; and 10 at alternative schools/programs.

Out-of-Field Teacher Count with Minority Student Count

Disney ES – 0 (75%)
Edison ES – 0 (61%)
Emerson ES – 0 (35%)
Harte ES – 0 (35%)
Jefferson ES – 0 (37%)
McKinley ES – 0 (76%)
Miller ES – 1 (28%)
Providencia ES – 0 (71%)
Roosevelt ES – 0 (50%)
Stevenson ES – 1 (55%)
Washington ES – 0 (59%)

Huerta MS - 5 (62%)
Luther Burbank MS – 2 (61%)
Muir MS – 6 (32%)

Burbank HS – 8 (31%)

Burroughs HS – 8 (35%)
Monterey HS – 5 (26%)
Independent Learning Academy – 5 (32%)

At elementary, the percentages of minority students range from 28% (Miller) to 75% (Disney). Miller has zero out-of-field teachers. Disney has 0 out-of-field teachers. The one teacher at Stevenson is expected to continue teaching. At the middle school level, the range of 32% minority at Muir Middle with six out-of-field teachers and 62% minority at Huerta Middle with five out-of-field teachers. All middle school teachers are expected to continue teaching. Burbank High has a 31% minority with eight out-of-field teachers. Burroughs High has a 35% minority with eight out-of-field teachers. The 16 teachers are expected to continue teaching. Monterey has five out-of-field teachers with a 26% minority rate. There is no pattern of out-of-field teachers with high minority enrollment at the elementary, middle, or high school level. All teachers are appropriately credentialed, supported by new teacher induction, and onsite colleagues as they develop their profession.

Are low-income students taught at higher rates by out-of-field teachers? No. In the district as a whole, BUSD has 5.2% (40/760) inexperienced first and second-year teachers. BUSD has 1 at an elementary school; 13 at the middle school level; 16 at the comprehensive high schools; and 10 at alternative schools/programs.

Out-of-Field Teacher Count with Socio-economically Disadvantaged Student Count

Disney ES – 0 (39%)
Edison ES – 0 (25%)
Emerson ES – 0 (42%)
Harte ES – 0 (25%)
Jefferson ES – 0 (27%)
McKinley ES – 0 (44%)
Miller ES – 0 (50%)
Providencia ES – 0 (56%)
Roosevelt ES – 0 (17%)
Stevenson – 1 (26%)
Washington ES – 0 (57%)

Huerta MS - 5 (45%)
Luther Burbank MS – 2 (42%)
Muir MS – 6 (44%)

Burbank HS – 8 (38%)
Burroughs HS – 8 (26%)
Monterey HS – 5 (47%)
Independent Learning Academy – 5 (32%)

At elementary, the percentages of low-income students range from 17% (Roosevelt) to 57% (Washington). Roosevelt has 0 inexperienced teachers. Washington has 0 inexperienced teachers. Stevenson has 1 teacher with a 26% low-income rate. The 1 teacher is expected to continue teaching.

At the middle school level the range of 44% low-income at Muir Middle with six out-of-field teachers and 42% low-income at Luther Burbank Middle with two out-of-field teachers. All eight are expected to continue. Burbank High has a 38% low income with eight out-of-field teachers. Burroughs High has a 26% low income with eight out-of-field teachers. Monterey has five out-of-field teachers with a 47% low-income rate. The total of 40 teachers are expected to continue teaching. There is no pattern of out-of-field teachers with high low-income enrollment at the elementary, middle, or high school levels. All teachers are appropriately credentialed, supported by new teacher induction, and onsite colleagues as they develop their profession. The 40 out-of-field count is due to multiple preps that the teachers are teaching and Board approved for out-of-field teaching.

Address Disparities

With no disparities for either minority or low-income students, BUSD remains committed to having all of our teachers qualified and appropriately credentialed for their assignments. Human Resources, appropriate district office staff, and school administrators will continue to improve the hiring process to attract the highest quality candidates. Human Resources advertises positions earlier, which results in earlier hiring from larger candidate pools, and a better ability to hire fully credentialed teachers. Schools also have strong collaborative teams. Inexperienced Teachers. The District provides a teacher assistance program with a mentor for all teachers who are placed on an improvement plan. The District provides administrators with a rigorous PD.

APPROVED BY CDE 2018/Revised 2025-26

Title II, Part A

Every Student Succeeds Act (ESSA) Provisions Not Addressed in the LCAP

For the majority of LEAs, the ESSA provisions identified on this page do not align with state priorities. **Each provision identified on this page must be addressed**, unless the provision is not applicable to the LEA. If the provision is not applicable to the LEA, respond with "N/A".

The CDE emphasizes that the LCAP Federal Addendum should not drive LCAP development. ESSA funds are supplemental to state funds, just as the LCAP Federal Addendum supplements your LCAP. LEAs are encouraged to integrate their ESSA funds into their LCAP development as much as possible to promote strategic planning of all resources; however, this is not a requirement. In reviewing the LCAP Federal Addendum, CDE staff will evaluate the LEA's

responses to the ESSA plan provisions. There is no standard length for the responses. LEAs will be asked to clarify insufficient responses during the review process.

To address these provisions, provide a narrative addressing each provision in the appropriate field below:

Professional Growth and Improvement

ESSA SECTION 2102(b)(2)(B)
Provide a description of the LEA's systems of professional growth and improvement, such as induction for teachers, principals, or other school leaders and opportunities for building the capacity of teachers, and opportunities to develop meaningful teacher leadership.

Response from Burbank Unified:

Professional growth and development are based on the following model:

- Identifying local needs of principals, teachers, and students
- Selecting an approach to address needs - Planning - Implementing - Monitoring and Reflecting
- Measuring Growth and Improvement

Professional development for all staff is aligned with State Standards, core curriculum, the CSTP, and program requirements. Student achievement data is the primary determiner of PD. PD is delivered by Instructional Services staff, the ELD TOSAs, Teacher Induction TOSAs, site administrators, and teachers. Principals (and PD to teachers from principals, as appropriate):

• Training for new and veteran administrators on policy, procedures, State Standards, assessments, curriculum, school plans, budget, staffing, discipline, CSTPs, etc.

• Instructional leadership using current research, best practices, and trends, based on the meta-analysis of John Hattie's Visible Learning

• Includes K-12 assessment data, CAASPP, iReady, WASC action plans, FPM requirements, TSI/ATSI/CSI, SPSA

• Addressing significant subgroups and closing the achievement gap

• Accelerating academic achievement and closing the achievement gap

• Differentiated Instruction for teachers and administrators

• Developing district assessments for reading, writing, mathematics in TK-5, as well as end-of-semester benchmarks in core courses in grades 6-12

• Innovative learning/engagement strategies/programs to improve student achievement

• Utilizing brain research

• Addressing student behavior issues and effective classroom management

• Continue parent/teacher conferences PD at the elementary level

• Monitoring teacher support programs funded with State money (for BUSD Induction) through informal and formal program reviews, participant feedback, and professional dialogue

• Monthly elementary and secondary principal meetings

• Management retreat twice annually

• Principal PLCs Teachers

• Train new trainers and sustain veteran teachers on the standards-based curriculum, instructional/engagement practices, and formative assessment and results

• Increasing vocabulary, comprehension, and writing in all content areas

• Intervention plans and strategies

• Student achievement data tracked over time to address learning needs and gaps

• Training on specialized programs GATE, Special Education, ELs, Title I

• Examine achievement data to verify that target student populations' needs are being met

• Induction Program and ongoing support for new teachers

• Provide support for SB 2042 credential teachers on meeting the needs of all students as they earn their professional teaching credential

• Provide technology PD – Google Classroom

• Technology learning tasks to teach students aligned to State standards

• Continue training teachers on designated software to improve student achievement.

Measuring Growth and Improvement quarterly review of classroom practices and student achievement by principals, teachers, and other leaders training with attention to:

• The number of students meeting/exceeding State Standards

• Examination of multiple measures achievement results (State and district student test results)

• Effective use of standards-aligned materials with fidelity

• Classroom walkthroughs to observe the implementation of curriculum and instructional practices

• Use PD feedback to identify further PD The following design steps for professional development include:

• Schedule PD during designated days, and release days; shortened Tuesdays (elementary and middle schools), late start Fridays (high school), after school or weekends

• Sustenance in the organization and management for continuous improvement of student achievement

• Use data collected from State/District assessments when presenting PD to raise awareness on areas of growth and to improve student learning.

BUSD provides a breadth of PD for administrators, teachers, and other school leaders. Training is tailored to the needs of staff. As staff advance in the district differing PDs occur based on the needs of the staff member and the role that the staff member plays. Systemically administrators participate in three monthly PDs. Teachers partake in at least two monthly PDs. These PDs are led by a variety of staff members depending on the topic.

ORIGINAL APPROVED BY CDE 2018/NO REVISION

Prioritizing Funding

ESSA SECTION 2102(b)(2)(C)
Provide a description of how the LEA will prioritize funds to schools served by the agency that are implementing comprehensive support and improvement activities and targeted support and improvement activities under Section 1111(d) and have the highest percentage of children counted under Section 1124(c).

Response from Burbank Unified:

In December 2019, Monterey Continuation High School was identified for Comprehensive Support and Intervention (CSI). The graduation rate was reported as 50% well below the 67% threshold. 100% of funds are allocated to the school except for indirect costs. Budgeted expenditures include professional development, improving the delivery of curriculum from a packet-based system to direct instruction, providing interventions, providing additional counseling services, and monitoring the progress of students. Monterey exited CSI in January 2023 with an 86% graduation rate.

In January 2024, two schools were identified for Additional Targeted Support and Improvement (ATSI). This is a three year designation by CDE. The dark gray indicates a “Very Low” score on the California Dashboard. A light gray indicates a “Low” score on the dashboard. When families opt students out of the State test, the score automatically becomes “Very Low” for that student. That has a negative impact on the subgroup. This one was an additive factor towards the designation.

Each school is writing into their school plan actions that would help to move them out of ATSI status. The actions would be approved by the School Site Council. These actions will roll over into the school plan for 2024-2025 and 2025-26.

	English Language Arts	Math	English Learner Progress	Chronic Absenteeism	Graduation Rate	Suspension Rate	Participation Rate
Edison	NA	SWD – Declined 18.4 points	NA	NA	NA	NA	NA
Miller	NA	NA	EL – Declined 8.4 points	NA	NA	NA	NA

In January 2025, one school was identified for Additional Targeted Support and Improvement (ATSI). This is a three year designation by CDE. Students with Disabilities scored “Red” on the California Dashboard for Chronic Absenteeism.

The school is writing into their school plan action that would help to move them out of ATSI status. The action would be approved by the School Site Council. These actions will roll over into the school plan for 2025-2026.

	English Language Arts	Math	English Learner Progress	Chronic Absenteeism	Graduation Rate	Suspension Rate	Participation Rate
Emerson	NA	NA	NA	SWD – Identified as Red	NA	NA	NA

Schools use an MTSS approach based on students' needs creating programs and identifying resources to attend to students. That said, the number of students in high need does vary by school site. Student needs are identified by CAASPP, district test results, and professional judgment. Student needs are unique to each school and are described in SPSAs mainly addressing focusing on Title I and Title III. Schools with a higher number of students “not meeting standards” are provided with teacher professional development, reading/language arts, math, and interventions. Data reports are created for each school that identify student needs for All Students; Disadvantaged Students; English Learners; and Ethnicity. Data is reviewed at the district level by a broad spectrum of Cabinet members, principals, assistant principals, and curriculum specialists (teachers). Also, the baseline of support is described in the LCAP (funding based on the unduplicated count of high-needs students by school site in action 1.11 of the

LCAP). District-level support available through the LCAP includes funding for staffing as described in the LCAP supplemental section, and tiered professional development described in the LCAP supplemental section. This design facilitates transparency and monitoring of program effectiveness as well as the responsible use of support funding. This structure allows us to monitor students based on need whether those be an enrichment for gifted students, students needing academic support, students needing social-emotional support, or students needing guidance towards meeting graduation requirements and preparation for college and career.

APPROVED BY CDE 2018/Revised 2025-26

Data and Ongoing Consultation to Support Continuous Improvement

ESSA SECTION 2102(b)(2)(D)
Provide a description of how the LEA will use data and ongoing consultation described in Section 2102(b)(3) to continually update and improve activities supported under this part.

Response from Burbank Unified:

BUSD organizes and shares out student outcome data (CAASPP, ELPAC, and district assessments) at least twice per year. All administrators and teachers have access to data in the student information system (School City). State and District assessment results are examined by administrators and teachers concerning the taught and learned curriculum, State Standards, and program requirements. In August CAASPP data is examined by each school staff by grade level and department by subgroups including All Students, Disadvantaged Students, English Learners, and Ethnicity.

Elementary schools administer district-developed assessments two times each year in grades K-5. Following the scoring of those tests school staff meet to examine the data by grade level, classroom, and individual student. Interventions are designed in reading/language arts and math for students in need following assessments. Intervention placement occurs when a student is identified and they are placed into an intervention program. Secondary schools administer district assessments twice each year as well as use class grades are used to identify students who need additional instructional support. Additional data is culled from teachers and school leaders, classroom observations, school-based student work, evidence of effective leadership, instructional and professional growth objectives data, stakeholder feedback, data-based objectives of student and educator achievement and performance data as well as final overall evaluation ratings and comments. These data are used to guide programmatic changes and professional development for program staff.

Ongoing consultations include data chats with district/school administrators, curriculum specialists, and English learner site coordinators about student achievement and the need to intervene with underperforming students and those who need additional challenges. Our goal has been to isolate causal factors that affect student achievement and scale the allocation of resources to the relative effects of those factors. We maintain a wide array of monitoring metrics in both our LCAP and School Plans (SPSAs) to assist in targeting needs, allocating resources, and evaluating program effectiveness. Data is regularly reported to our stakeholders including our employee groups, governing board, parents, and the community. Disaggregated data is analyzed to guide the responsible allocation of resources to ensure safe, productive learning environments with the best overall educator effectiveness.

Title II Part A funds pay for two positions in the district:

1.) Teacher Induction/Implementation of State Standards; and

2.) Instructional Technology. Both TOSAs serve administrators and teachers. At least annually, the need for both positions is reviewed.

Priorities for each position are established. Discussions for both positions included district and school administrators, teachers, association officers, and parents through the LCAP process and additional district-led meetings. Both staff members meet with district office staff weekly to attend to immediate needs and plan for future priorities. BUSD coordinates Title II-funded activities with other related programs and subsequent activities. The roles of the TOSA's support data discussions, identification of needs, implementation of curriculum, interventions, assessments, and monitoring.

ORIGINAL APPROVED BY CDE 2018/NO REVISION

Title III, Part A

Every Student Succeeds Act (ESSA) Provisions Not Addressed in the LCAP

For the majority of LEAs, the ESSA provisions identified on this page do not align with state priorities. **Each provision identified on this page must be addressed**, unless the provision is not applicable to the LEA. If the provision is not applicable to the LEA, respond with "N/A".

The CDE emphasizes that the LCAP Federal Addendum should not drive LCAP development. ESSA funds are supplemental to state funds, just as the LCAP Federal Addendum supplements your LCAP. LEAs are encouraged to integrate their ESSA funds into their LCAP development as much as possible to promote strategic planning of all resources; however, this is not a requirement. In reviewing the LCAP Federal Addendum, CDE staff will evaluate the LEA's responses to the ESSA plan provisions. There is no standard length for the responses. LEAs will be asked to clarify insufficient responses during the review process.

To address these provisions, provide a narrative addressing each provision in the appropriate field below:

Title III Professional Development

ESSA SECTION 3115(c)(2)
Describe how the eligible entity will provide effective professional development to classroom teachers, principals, and other school leaders, administrators, and other school or community-based organizational personnel.

Response from Burbank Unified:

High-quality professional development is provided for classroom teachers, principals, administrators, classified and other school-based personnel that is:

a. designed to improve the instruction and use of assessment data of English learner students;
b. designed to enhance the ability of teachers to understand and use curricula, assessment measures, and instructional strategies for English learner students;
c. based on scientifically-based research demonstrating the effectiveness of professional development to increase children's English proficiency, substantially increase teachers' subject matter knowledge, teaching approaches, and teaching skills; and
d. has a long-term effect resulting in a positive and lasting impact on teacher performance in the classroom.

Burbank Unified School District endeavors to provide English learner students with highly qualified teachers who not only hold a Professional Credential, but who also hold an appropriate Cross-cultural Language and Academic Development (CLAD) authorization which qualifies them to instruct English learner students in the State of California. All District teachers without the CLAD credential have an understanding that the certification must be completed within two years. New hires will not be moved into permanent status until the CLAD is completed. The District works with the Los Angeles County Office of Education (LACOE) to connect new hires with LACOE-sponsored workshops free of charge that they can amend after school or during the summer to prepare them to pass the State examination. These teachers are contacted annually and asked for an update on their current status regarding obtaining this credential. (At the time this was written 11 teachers were not fully CLAD authorized.) The professional development program is designed to improve instruction and, thus, the achievement of English learner students. District programs offered are research-based and have demonstrated effectiveness in developing English language proficiency and promoting academic achievement. District Professional Development Providers offer the listed trainings except as indicated.

Professional development offerings include training in:

- Adopted ELA and ELD standards and materials
- Step Up to Writing
- Project G.L.A.D. (Guided Language Acquisition Design)
- SIPPS (Systematic Instruction in Phonological Awareness, Phonics, and Sight Words)
- Literacy and engagement structures training for paraprofessionals • Workshops, institutes, and conferences such as CABE, CATESOL, Two-Way Dual Language Conference
- ELPAC (English Language Proficiency Assessments for California)

Training for teachers includes instructional strategies and program objectives being continually evaluated based on student assessment results from trimester assessments. Summative ELPAC and CAASPP assessments also help guide instruction.

Title III supplements the PD and support by providing ongoing opportunities for coaching, curriculum enhancement, and collaboration for teachers of ELs who have previously taken Step up to Writing training, Project GLAD PD, Designated ELD training, and Integrated ELD training. This ongoing site-level support supplements the first phase of PD provided by the LCAP Base and Supplemental grants, allowing teachers of EL and their Specialists/Coordinators to take a “deeper dive” to tailor their instruction and curriculum to meet the needs of ELs both in

Designated ELD and through Integrated ELD in the content areas. Administrators observe classrooms at least monthly to determine the effectiveness of teaching strategies and materials and assist teachers as required. In this way, the implementation of professional development is monitored. The District employs elementary ELD Specialists and secondary ELD Coordinators through the LCAP Supplemental Grant. Training for ELD Specialists and Coordinators is provided by the District EL Teacher on Special Assignment, which is also funded out of the LCAP Supplemental Grant. The training is held throughout the year and is designed to foster and maintain best instructional practices at their school sites. Practices learned in the training arc are then passed on to teachers at staff development meetings and through demonstration lessons in classrooms.

At monthly meetings, the ELD Specialists and Coordinators will:
• Review current data to evaluate student progress and determine needs
• Review Site Program Review documents and Action Plans to determine assistance needed by sites to implement successful programs
• Review newly implemented materials for effectiveness.
• Search for additional supplemental materials in identified areas
• Review newly implemented materials for effectiveness
• Search for additional supplemental materials in identified areas.

ORIGINAL APPROVED BY CDE 2018/NO REVISION

Enhanced Instructional Opportunities

ESSA SECTIONS 3115(e)(1) and 3116
Describe how the eligible entity will provide enhanced instructional opportunities for immigrant children and youth.

Response from Burbank Unified:

Immigrant children and youth whose first language is not English will be provided comparable services as are all English Learners. Students benefit from supplemental materials funded by Title III Immigrant designed for newcomer students who are learning English. They will be offered intervention services funded out of Title III Immigrant that help them learn and adjust to a new country by attending before and/or after school classes or joining lunchtime intervention sessions with teachers. They will also be the recipients of instructional practices that are taught to appropriately credentialed teachers and instructional assistants. Immigrant children and youth will be placed in appropriate instructional settings including:

- Structured English Immersion
- Dual-Language Immersion
- English Mainstream for non-ELs Student progress will be monitored primarily by teachers, teachers on special assignments, and school principals.

When needed, Student Study Teams will be called to examine individual student progress.

ORIGINAL APPROVED BY CDE 2018/NO REVISION

Title III Programs and Activities

ESSA SECTION 3116(b)(1)
Describe the effective programs and activities, including language instruction educational programs, proposed to be developed, implemented, and administered under the subgrant that will help English learners increase their English language proficiency and meet the challenging State academic standards.

Response from Burbank Unified:

All English Learners will have equal access to highly qualified teachers with CLAD or equivalent and will have access to skilled administrators at the school and district levels. All English Learners will have equal access to appropriate State and District Board-adopted instructional materials, daily Designated English Language Development, and comprehensible access to the core curriculum by Integrated ELD through Specially Designed Academic Instruction in English (SDAIE) strategies. All English Learners will make progress toward District goals on the California Assessment (CAASPP), English Language Proficiency Assessments for California (ELPAC), and District-designed tests developed by teachers.

Description of Programs and Services

Services are provided to English Learners (ELs) to ensure that they are acquiring English language proficiency and are receiving appropriate instruction in the core curriculum. Additional and appropriate educational services are provided in Transitional Kindergarten through grade 12 in all classroom settings. These services enable ELs to overcome language barriers and are provided until they have demonstrated English language proficiency. The District will provide all ELs with instructional programs that comply with State EC 300-340 and federal legal requirements. These programs are research-based and approved by the COE.

Description of Programs and Activities

Structured English Immersion

The Structured English Immersion program's curriculum and instruction are designed for pupils who are learning English. Students receive instruction in English, including designated ELD instruction and integrated ELD within their grade level academic subject matter content (English, math, social studies, science). The program immerses students in English-language instruction with primary-language support (as needed), provided through the use of aides, peer tutors, community volunteers, and appropriate instructional materials. Reading/Language Arts (with Integrated ELD), as well as Designated English Language Development (ELD), are provided through the implementation of State Board approved curriculum: Benchmark's Advance for grades K-5 and Houghton Mifflin Harcourt's California Collections in grades 6-12. Academic subjects in all core-curricular areas are taught according to California State Content standards. Students are assessed on their progress toward meeting ELD and content standards through District and State assessments. Support is provided for students using Specially Designed Academic Instruction in English (SDAIE) strategies and primary language support (when available). Teachers of these students are (Bilingual) Cross-cultural Language and Academic

Development (B/CLAD), Senate Bill 1969/395, or CTEL authorized, as are the administrators who evaluate them.

Dual-Language Immersion (Spanish-English)

The Dual Language Immersion (DLI) program provides language learning and academic instruction for native speakers of English and native speakers of Spanish, with the goals of high academic achievement, first and second language proficiency, and cross-cultural understanding. Content area instruction is in Spanish for 90% of the day in kindergarten, decreasing by 10% Spanish language instruction each year until a ratio of 50/50 is attained in 5th grade. English learners are provided both Designated ELD and Integrated ELD during the English-language part of the day. Spanish/Language Arts with Integrated SLD, as well as Designated English Language Development (ELD), are provided by State Board approved curriculum: Benchmark's Advance for Reading/Language Arts and ELD and Benchmark's Adelante for Reading/Spanish Language Arts. Academic subjects in all core-curricular areas are taught according to California State Content standards. Students are assessed on their progress toward meeting ELD and content standards through District and State assessments. Support in DLI comes from teacher implementation of SDAIE strategies and Integrated ELD/SLD. Teachers of these students hold bilingual authorizations in Spanish.

Programs are funded by LCAP Base or Supplemental Grants. Activities such as interventions, supplemental instructional materials, and PD and curriculum enhancement centered around initial Project GLAD training, are funded out of Title III.

ORIGINAL APPROVED BY CDE 2018/NO REVISION

English Proficiency and Academic Achievement

ESSA SECTION 3116(b)(2)(A-B)
Describe how the eligible entity will ensure that elementary schools and secondary schools receiving funds under Subpart 1 assist English learners in:

A. achieving English proficiency based on the State's English language proficiency assessment under Section 1111(b)(2)(G), consistent with the State's long-term goals, as described in Section 1111(c)(4)(A)(ii); and
B. meeting the challenging State academic standards.

Response from Burbank Unified:
The effectiveness of the programs for English learner students is determined by the increase in:

- English proficiency; and
- Academic achievement in the core academic subjects as measured by the State's Accountability Model and School Dashboard BUSD has adopted materials from the State-approved list of adoptions for core curriculum for both elementary and secondary students.

Benchmark Advance and Adelante are the adopted core programs for English Language Arts (ELA) in Grades TK-5. All students, including English learners (ELs), Gifted and Talented Education (GATE), and Special Education, have access to the core curriculum. ELs are placed in the Structured English Immersion (SEI) program or the Dual Immersion (DI) program where they receive thirty minutes of daily Designated English Language Development (ELD). This is provided through support and supplemental programs, connecting prior background knowledge, comprehension strategies, and linguistic patterns taught in small group settings. Both progress in English proficiency and academic achievement in core subjects are measured through the English Language Proficiency Assessments for California (ELPAC), the California Assessment of Student Performance and Progress (CAASPP), Scholastic Reading Inventory (SRI), and iReady ELA assessments given at the end beginning of the school year and end of the school year. For Secondary, the BUSD has chosen HMH's California Collections as the adopted core program for ELA in grades 6–12. The Language Workshop is the component of Collections used for Designated ELD. The program includes Integrated ELD strategies. It provides scaffolded instruction, cooperative learning, and metacognitive strategies to maximize learning. Progress in language proficiency is measured through program assessment, the ELPAC, interim assessments, and the CAASPP.

The District's Master Plan for ELD outlines the program requirements for ELs at elementary, middle, and high schools. It also includes the level of proficiency expected to move on to the next level. An extensive Annual EL Program Review, completed each year by site administrators and specialists, identifies strengths and areas of improvement. An Action Plan addresses the latter. The progress of ELs is demonstrated on the CAASP, ELPAC, local assessments, and curriculum-embedded assessments. The ELD Matrix (elementary) and writing prompt (secondary) are used by teachers annually to judge language growth. Data on EL student progress is disaggregated and used to complete each school's Single Plan and for the completion of Individual Learning Plans (elementary) or Individual Intervention Plans (middle school).

Title III funds will be used to supplement services and materials for ELs. ELs have the opportunity to attend before and/or after-school supplemental intervention classes. Also, supplemental materials may be purchased for those students needing materials at a level more suitable to their proficiency. Services are provided to ELs to ensure that they are acquiring English language proficiency and are receiving appropriate instruction in the core curriculum. Additional and appropriate educational services are provided in TK through grade 12 to ensure that the specific needs of ELs are met.

The district programs that address the needs of ELs for tutorials and/or intensified instruction are:

- Student Support Team (SST) process
- Before/After school intervention
- Summer school programs specifically for ELs to ensure that ELs have access to information related to vocational education, college attendance, and career opportunities, the District provides the following services:
- Visits from the CTE counselor to administer "Career Targets," an occupational interest survey, including interpretation of results:
- Information about vocational classes

• A college fair
• College financial assistance nights
• Vocational and CTE courses
• College classes at the community college Programs currently in place include:
• Before and after school extended day
• Individual Learning Plans and Individual Intervention Plans
• Student Study Teams
• Intervention held during, before, and/or after school
• Supplemental materials used during the intervention
• Special Education
• Adult School English as a Second Language services also addressed in sections 1, 2, and 3 are detailed below reinforcing the "core" activities and services for English learners. Two programs offer core and ELD: Structured English Immersion and Dual Immersion. Each school's SPSA outlines strategies to help ELs close the achievement gap and become proficient in the English language and academic content.

Resources and strategies to assist schools are:
• Master Plan for English Learner Programs
• English Language Development program
• Integrated ELD utilizing SDAIE and other strategies for content classes • State ELD standards
• State Standards for core academic areas
• Professional Development in Designated and Integrated ELD As a remedy for not achieving, the District will provide:
a. A new ELA/ELD curriculum for grades TK-5 and allow grades 6-12 to pilot programs aligned to State Standards
b. Intensified instruction for ELs
c. College and career pathways for ELs
d. Integrated instruction for ELs
e. Provide instructional strategies PDs using Project GLAD strategies and other professional developments
f. Create Project GLAD units by teachers g. Support schools with TOSAs

ORIGINAL APPROVED BY CDE 2018/NO REVISION

Title IV, Part A

Every Student Succeeds Act (ESSA) Provisions Not Addressed in the LCAP

For the majority of LEAs, the ESSA provisions identified on this page do not align with state priorities. **Each provision identified on this page must be addressed**, unless the provision is not applicable to the LEA. If the provision is not applicable to the LEA, respond with "N/A".

The CDE emphasizes that the LCAP Federal Addendum should not drive LCAP development. ESSA funds are supplemental to state funds, just as the LCAP Federal Addendum supplements your LCAP. LEAs are encouraged to integrate their ESSA funds into their LCAP development

as much as possible to promote strategic planning of all resources; however, this is not a requirement. In reviewing the LCAP Federal Addendum, CDE staff will evaluate the LEA's responses to the ESSA plan provisions. There is no standard length for the responses. LEAs will be asked to clarify insufficient responses during the review process.

To address these provisions, provide a narrative addressing each provision in the appropriate field below:

Title IV, Part A Activities and Programs

ESSA SECTION 4106(e)(1)
Describe the activities and programming that the LEA, or consortium of such agencies, will carry out under Subpart 1, including a description of:

A. any partnership with an institution of higher education, business, nonprofit organization, community-based organization, or other public or private entity with a demonstrated record of success in implementing activities under this subpart;

Response from Burbank Unified:

The Title IV application was developed through consultation with Title I Advisory and with Title III DELAC as well as BUSD Cabinet. School administrators also provided an additional layer of consultation. Needs were identified from the District's annual parent and employee survey. The need to address mental health coupled with safe and healthy students is a clear goal. In 2024-2025, BUSD received $126,144. Well-rounded education activities including career guidance and counseling are scheduled to receive $50,000. Safe and Healthy activities with a focus on mental health services, training of school personnel, PBIS activities, and drug and violence prevention are scheduled to receive $50,000. The district is partnering with Burbank Family Services to provide expertise in these areas and provides services to students, staff, and families at the two comprehensive high schools. Services will not only focus on mental health but on career guidance and counseling. District staff will meet monthly with the Burbank Family Services staff to review monthly activities and to set targets to support the Burbank community. Effective Use of Technology is scheduled to receive $20,000. Technology professional development will be used to support teachers in using the School City database and reports to guide instruction. School City contains all of the demographic and testing information for CAASPP, ELPAC, and district assessments data along with other test data. Professional development will begin with school administrators and curriculum specialists so that they can provide support to teachers as they use the School City. Professional development will also be made available to administrators and teachers in using iReady, Renaissance products and other resources. The effective use of these technology tools will be expanded to increase their effective application by students resulting in increased student achievement.

ORIGINAL APPROVED BY CDE 2018/NO REVISION

B. if applicable, how funds will be used for activities related to supporting well-rounded education under Section 4107;

Response from Burbank Unified:
ORIGINAL APPROVED BY CDE 2018/NO REVISION

C. if applicable, how funds will be used for activities related to supporting safe and healthy students under Section 4108;

Response from Burbank Unified:
ORIGINAL APPROVED BY CDE 2018/NO REVISION

D. if applicable, how funds will be used for activities related to supporting the effective use of technology in schools under Section 4109; and

Response from Burbank Unified:
ORIGINAL APPROVED BY CDE 2018/NO REVISION

E. the program objectives and intended outcomes for activities under Subpart 1, and how the LEA, or consortium of such agencies, will periodically evaluate the effectiveness of the activities carried out under this section based on such objectives and outcomes.

Response from Burbank Unified:
ORIGINAL APPROVED BY CDE 2018/NO REVISION

2024-2025 Teacher Assignments

	Out-of-Field Teacher (Local Assignment Approval by Board)	Ineffective Teacher (emergency permit, waiver)	Inexperienced Teacher (2 years or less)	Percentage of Low-Income (2024-25)	Percentage of Minority (2023-24)
BHS	7	2	3	35%	34.6
JBHS	9	2	4	25%	65.6
Monterey	7	0	0	47%	65.6
Huerta	2	0	0	29%	63.7
Luther	2	1	3	30%	62.7
Muir	2	2	4	37%	32.3
ILA	6	0	0	32%	31.5
Disney	0	0	0	33%	73.6
Edison	1	1	2	18%	58.4
Emerson	0	1	3	35%	37.6
Harte	0	0	5	23%	61.6
Jefferson	0	0	0	23%	42.3
McKinley	0	1	3	36%	73.9
Miller	0	1	2	47%	29.9
Providencia	0	0	0	40%	73.2
Roosevelt	0	0	1	13%	53.5
Stevenson	0	0	2	20%	54.6
Washington	0	0	3	49%	58.2
District Total	36	11	35		

Ineffective Teacher

An ineffective teacher is any of the following:

- An individual whose assignment is legally authorized by an emergency permit that does not require possession of a full teaching license; or
- A teacher who holds a teaching credential but does not possess a permit or authorization that temporarily allows them to teach outside of their credentialed area (misassigned)
- An individual who holds no credential, permit, or authorization to teach in California.

Under this definition, teachers with the following limited emergency permits would be considered ineffective:

- Provisional Internship Permits,
- Short-Term Staff Permits
- Variable Term Waivers

- Substitute permits or Teaching Permits for Statutory Leave (TSPL) holders serving as the teacher of record

Out-of-Field Teacher

A credentialed out-of-field teacher is:
A credentialed teacher who has not yet demonstrated subject matter competence in the subject area(s) or for the student population to which he or she is assigned. Under this definition, the following limited permits will be considered out of field:

- General Education Limited Assignment Permit (GELAP)
- Special Education Limited Assignment Permit (SELAP)
- Short-Term Waivers
- Emergency English Learner or Bilingual Authorization Permits
- Local Assignment Options (except for those made pursuant to the *California Code of Regulations*, Title 5, Section 80005[b])

Inexperienced Teacher

A teacher who has two or fewer years of teaching experience.

Minority Student

A student who is American Indian/Alaska Native, Asian, African American, Filipino, Native Hawaiian/Pacific Islander, Hispanic, or Two or More Races Not Hispanic.

Low-Income Student

A student who is eligible to receive Free or Reduced-Price Meals

Burbank Unified School District
Instructional Services

REPORT TO THE BOARD

TO:	Members of the Board of Education
FROM:	Peter Knapik, Assistant Superintendent of Educational Services
PREPARED BY:	Peter Knapik, Assistant Superintendent of Educational Services
SUBMITTED BY:	Laura Erisman, Administrative Secretary
DATE:	June 25, 2026
SUBJECT:	Approval of Agreement with Family Service Agency of Burbank to Provide School - Based Counseling Services

---

Background:

The Family Service Agency of Burbank (FSA) provides counseling services to members of the Burbank community. FSA has also been providing group and individual counseling services to students at all elementary and secondary schools in Burbank. Most of these programs have been supported by funding from the City of Burbank and FSA, and school staff has reported very positive results. FSA began to expand counseling services to include elementary schools in 2007 starting with Providencia Elementary. For the past several years, FSA has been providing these services to all elementary, secondary schools, and on alternative campuses.

During the 2015/2016 school year, Family Service Agency of Burbank (FSA) opened an on-site Wellness Center at Burbank High School (BHS). An additional on-site Wellness Center was opened at John Burroughs High School (JBHS) in the spring of 2017. These Wellness Centers were opened because of an identified need to offer students a tranquil and supportive respite to collect their thoughts and share their feelings in an environment staffed with therapists from FSA. Since opening, the programs at both schools have served hundreds of students and have become a valuable resource for the District. After the 2017-2019 school year, the name, "Wellness Center" at each comprehensive high school was changed to "Student Care Center."

District Wide Goals for 2025-2026:

1.0 Students will be career/college ready via high-quality instruction
2.0 Students and Staff will be physically, emotionally and mentally healthy.

Discussion and Issues:
In 2024-2025, The Burbank City Council recommended that the City of Burbank continue to fund the counseling services provided by FSA needed at all schools in the Burbank Unified School District. The City of Burbank has agreed to provide $245,000 for this program. Additional funding was provided by Family Service Agency to support these services, as well as $142,000 from the District LCAP Supplemental funds.

FSA staff will meet with students during the school day as resources allow. Students will receive group counseling and/or individual counseling referrals to be made by a school counselor, psychologist, teacher, assistant principal, principal or parent. Students will be eligible for counseling services when their parents or guardians have signed Informed Consent and Release of Information forms. The overall goal will be to promote skills that build resilience and improve the student's ability to succeed.

Fiscal Impact:

The contract period will be effective July 1, 2026 through June 30, 2027. The District will contribute $164,500 LCAP supplemental Funds to support these counseling services provided by FSA.

Recommendation:

Peter Knapik, Assistant Superintendent of Educational Services, recommends that the Board of Education approve the agreement between the Burbank Unified School District and the Family Service Agency of Burbank, to provide individual and group counseling to elementary and secondary school pupils, as required, effective July 1, 2026 through June 30, 2027, not to exceed $162,500 (010-01500.0-71500-31100-5810-7420000) LCAP supplemental funds, and that the authority to sign the agreement be exercised pursuant to BUSD -AR 3314, as presented.



ELEMENTARY, MIDDLE & HIGH SCHOOL AGREEMENT 2026-27
The Burbank Community Youth Mental Health
CARE Program at Burbank Unified School District

This agreement made and entered into on July 1, 2026, between Burbank Unified School District, hereinafter referred to as "District", and Family Service Agency of Burbank, hereinafter referred to as "BurbankFSA" for the purpose of providing mental health services on "District" school campuses as allowed by program design and resources.

PROGRAM DESCRIPTION

Mission and Scope of Services

The Burbank Community Youth Mental Health CARE Program (CYMH-CARE Program) is dedicated to protecting youth from adversity, fostering socio-emotional learning, and promoting psychological well-being within the "District" campuses and the Burbank community. The program ensures that young people have access to high-quality, community-based health care, which is critical for their overall healthy development and well-being. This support helps students manage mental health challenges that may impact their learning, behavior, and social-emotional development.

Partnership History

Established in 2002, a collaborative partnership was created between the "District," the City of Burbank, and "BurbankFSA." This partnership has since grown to provide both individual and group counseling services to students across a variety of school settings.

Schools Served

11 Elementary Schools
3 Middle Schools
2 High Schools
1 Alternative School
1 Adult School

In addition to these campuses, services are also extended to students enrolled in the "District's" Independent Learning Academy.

Point of Contact

The District and BurbankFSA will maintain regular communication through designated points of contact to support effective coordination, problem-solving, and service delivery. Leadership representatives from both organizations will meet periodically, as mutually agreed upon, to review program implementation, discuss emerging needs, and support ongoing partnership efforts. The parties acknowledge that communication provisions are intended to strengthen collaboration, facilitate timely resolution of operational issues, and support student access to services while preserving BurbankFSA's role as an independent provider and its responsibility for clinical decision-making and program operations.

Focus of Therapeutic Services

The CYMH-CARE Program provides individual and group sessions that address a variety of issues, including depression, anxiety, self-harm, isolation and alienation, substance abuse, all forms of violence, relationship concerns (both peer and family), and emotional regulation.

Collaboration for Student Well-Being

Through this partnership, the "District" and "BurbankFSA" leadership agree to collaborate closely on matters related to student mental health. Both organizations prioritize the well- being of students by coordinating efforts to to address their needs. This approach fosters a supportive environment where students' mental health and wellness remain at the forefront of program planning and implementation.

ACCESSING CARE

Process

Access to the BYMH-CARE Program is initiated when school staff—such as a principal, psychologist, counselor, or teacher—refer a student for services. After the referral packet is submitted by the District, a "BurbankFSA" Director, together with the student's parent or guardian, conducts an assessment to determine the student's needs. Upon completion of this assessment, a "BurbankFSA" therapist is assigned to the student to provide weekly care.

Referral Status Reporting

The District and BurbankFSA are committed to transparent communication, effective coordination, and mutual accountability throughout the referral process while maintaining the highest legal and ethical standards of confidentiality.

Together, the parties will identify reporting tools, processes, and reporting expectations that support timely information sharing, operational efficiency, meaningful aggregate trend analysis, and continuous program improvement. All reporting activities shall be conducted in a manner that protects student privacy and complies with applicable federal and state laws governing educational, mental health, and confidential records.

To support effective implementation and long-term sustainability, reporting requirements, data collection expectations, and reporting frequency shall be reasonably aligned with the scope of services provided under this Agreement, available resources, and the operational capacities of both parties.

Partnership Calendar and Annual Planning Cycle

Annual Partnership Engagement Framework

The District and BurbankFSA recognize that meaningful partnerships are built through ongoing communication, shared learning, mutual trust, and a collective commitment to student well-being. Regular opportunities to connect, reflect, and learn from one another strengthen service delivery, deepen collaboration, and help ensure that supports remain responsive to the evolving needs of students, families, and schools.

To support these shared commitments, the parties agree to the following annual partnership engagement framework:

Fall – Starting Strong Together

- **Back-to-school coordination, staffing, and program readiness**
- **Discussion of shared priorities, goals, and service delivery plans for the school year**
- **Alignment regarding communication practices, training opportunities, and operational coordination**

Winter – Learning, Listening & Adapting

- **Discussion of service delivery, utilization patterns, emerging needs, and implementation experiences**
- **Shared learning regarding successes and challenges**
- **Coordination regarding community outreach, resource development, and partnership priorities**

Winter/Spring – Student Impact & Community Connection

- **Sharing program accomplishments, participation, and emerging trends**
- **Celebrating student impact and identifying opportunities to deepen support for youth and families Highlighting the collective contributions of the partnership**

Spring – Looking Forward Together

- **Reflection on lessons learned throughout the year**
- **Consideration of stakeholder feedback and emerging community needs**
- **Exploration of future opportunities, priorities, and enhancements for the coming school year**

Additional conversations may be scheduled throughout the year by mutual agreement to address emerging opportunities, challenges, or matters of shared interest.

Special Considerations for Students with IEP or 504 Plans

When a student who has an Individualized Education Program (IEP) or a 504 plan is referred to the BYMH-CARE Program, District staff are responsible for providing a copy of the student's plan to the BYMH-CARE Program Director prior to scheduling the assessment. This step ensures that all necessary accommodations and supports are considered during the program's intake and evaluation process. It is understood that the BYMH-CARE Program, as provided by "BurbankFSA" on school campuses, does not replace the specialized services offered through "BurbankFSA's" SPED Mental Health Program.

Costs and Additional Resources

In support of the BYMH-CARE Program's youth services, "BurbankFSA" conducts two annual fundraisers. These events help generate financial resources to sustain the partnership and its activities both on school campuses.

The design and capacity of the BYMH-CARE Program, as well as its ability to enroll students and provide care, are directly determined by the resources available to the program. This means that the scope of services and the number of students who can participate depend on the funding and support that can be secured.

Program Scope and Impact

The BYMH-CARE Program is expected to provide the “District” with a minimum of 6,000 units of direct clinical care each year, supporting a minimum of 450 youth across identified elementary, middle and high schools. The positive effects of the program will extend beyond the students who receive direct services, benefiting their classmates, teachers, families, neighborhoods, and the wider Burbank community.

Students will participate in the BYMH-CARE Program at scheduled intervals. While the primary focus remains on meeting the needs of the youth, parental involvement will be included as needed during and after school hours, as indicated, to reinforce and support each student’s therapeutic process.

Continuing with the tradition established by the partnership, “BurbankFSA” will also continue to respond to unanticipated critical needs identified by the “District” that may not be specifically outlined in this agreement, provided that adequate resources are available.

Program Location

The “District” services will typically be delivered directly on school campuses, ensuring accessibility for students and supporting their educational environment. In situations where, clinical needs require a different setting, an alternative location may be considered. This decision will be made collaboratively between "BurbankFSA" and the student’s parent(s) or guardian(s), ensuring that any change in location or modality (telehealth) is in the best interest of the student and agreed upon by all parties.

The "District" will work closely with “BurbankFSA” to identify and set up appropriate therapeutic spaces for both individual and group CARE sessions within the program. This collaboration helps ensure that students have access to environments that foster their well-being and support their participation in the therapeutic process.

Dates of Implementation and Completion

The program is scheduled to operate in accordance with the established school calendar, from July 1, 2026, and completed on June 30, 2027, ensuring alignment with the academic schedule and school-based activities.

Staffing

The program employs the necessary clinical, educational, and administrative personnel to effectively fulfill the scope of work and ensure the delivery of quality services. “BurbankFSA” is highly regarded as a leading mental health training site in the region, operating with a commitment to excellence comparable to that of a distinguished teaching hospital. Each year, "BurbankFSA" supports the professional development of approximately 45 graduate students pursuing master's and/or doctoral-level degrees through a comprehensive training program.

The "BurbankFSA" team consists of a diverse group of highly skilled licensed clinicians, as well as individuals who are working toward clinical licensure in California. These professionals deliver quality mental health services under the close supervision and mentorship of an experienced and diverse group of senior clinicians. The dual mission of "BurbankFSA" is to provide accessible, high-quality mental health care to the community and to cultivate the next generation of mental health providers. This unique collaborative model ensures that the partnership can offer seamless access to community-focused mental health services while fostering the professional growth of future clinicians.

Equipment and Supplies

All equipment and supplies necessary for the operation of the program will be provided exclusively by "BurbankFSA." This includes any materials required to support the implementation of services, ensuring that staff and students have access to the resources needed to achieve program goals. By maintaining responsibility for equipment and supplies, "BurbankFSA" helps ensure consistency and quality across all program activities.

GENERAL PROVISIONS

Modifications and Amendments

Any changes or modifications to this agreement must be documented in writing and signed by both “BurbankFSA” and the "District." This process ensures that all parties are fully aware of and agree to any adjustments made to the terms of the contract.

Administrative changes that do not alter the mental health services provided under the agreement may be implemented at any time during the contract period. Such changes require mutual consent from both.

"BurbankFSA" and the "District." This approach allows for flexibility in managing the administrative aspects of the agreement while maintaining the integrity of the mental health services.

Independent "BurbankFSA" Status

For the purposes of this agreement, "BurbankFSA" shall operate as an independent contractor. At no time will "BurbankFSA" be considered an officer, employee, or agent of the "District." This distinction ensures that "BurbankFSA" is fully responsible for its operations and personnel and is solely responsible for fulfilling its contractual obligations without direct oversight or intervention from the "District."

Termination

Either party to this agreement may initiate termination by providing the other party with written notice at least one hundred twenty (120) calendar days in advance. This termination clause allows both "BurbankFSA" and the "District" sufficient time to prepare for the conclusion of services and ensures an orderly ethical transition or cessation of care.

Inspection and Audit

"BurbankFSA" agrees to provide the "District" with reasonable access to all relevant books, documents, papers, reports, records, or other materials related to the execution and administration of this contract upon receiving a reasonable request. Such access is intended to support the "District" in fulfilling its oversight and audit responsibilities. In complying with these requests, "BurbankFSA" will continue to adhere to all current state laws and regulations concerning the confidentiality of mental health service records.

Confidentiality

"BurbankFSA" will continue to work collaboratively and in good faith with students, parents/guardians, District staff, and community partners to support timely access to care, promote student safety and well-being, and strengthen the mental health support available to all youth served through this partnership. It's understood that all information obtained by "BurbankFSA" in the course of providing services under this Agreement shall be considered confidential and shall be maintained, protected, and disclosed only in accordance with all applicable federal and state laws, regulations, and professional ethical standards governing student records, mental health services, and confidentiality, including but not limited to applicable provisions of HIPAA, FERPA, and California law. "BurbankFSA" shall not release, disclose, or share confidential information with any third party without appropriate written authorization from the legally authorized individual or entity, except as otherwise permitted or required by law, **including circumstances involving mandated reporting, risk of harm, or legal obligation.**

Indemnification

"BurbankFSA" shall, at its own expense, cost, defend, hold harmless, and indemnify "District" and its officers, agents, and employees from all liabilities and claims for damages for death, sickness, or injury to persons or property including without limitation all consequential damages, from any cause whatsoever arising from or connected with its services hereunder, resulting from the negligence of "BurbankFSA", its agents, or employees.

The "District" shall, at its own expense, cost, defend, hold harmless, and indemnify "BurbankFSA" and its officers, agents, and employees from all liability and claims for death, sickness, or injury to persons or property including without limitation all consequential damages, from any cause whatsoever arising from or connected with its services hereunder, resulting from negligence of "District", its agents, or employees.

Insurance

During the entire term of this contract and any extension or modification thereof, BurbankFSA shall keep in effect a policy or policies of comprehensive general liability insurance, $2,000,000 per occurrence, the following insurance coverage at its sole expense: Commercial General Liability Insurance: Minimum $2,000,000 per occurrence and $3,000,000 aggregate, covering bodily injury and property damage arising from acts or omissions of BurbankFSA, its employees, agents, and volunteers. Sexual Abuse and Molestation Coverage: Minimum $3,000,000 per occurrence and aggregate. Workers' Compensation Insurance as required by California law. Professional Liability Insurance: Minimum $1,000,000 per occurrence.

All policies shall name the District as Additional Insured and shall provide primary coverage. Certificates of insurance and required endorsements shall be provided upon request.

Notices
Original

Any notice required under this Agreement shall be provided in writing and may be delivered by certified or registered mail, recognized overnight courier, or email.

Notices to the District shall be directed to the Superintendent or a designee identified in writing by the District. Notices to BurbankFSA shall be directed to the Executive Director or a designee identified in writing by BurbankFSA. Either party may update its notice information by providing written notice to the other party.

Notices shall be deemed received upon: (a) confirmation of delivery by the United States Postal Service for certified or registered mail; (b) confirmation of delivery by the courier for overnight delivery; or (c) acknowledgment of receipt by the receiving party for notices transmitted by email.

Payment Provisions & Reporting

Payment invoices are to be submitted to the "District" monthly and will be payable within thirty days from the date of receipt. For the contract year 2026-27, the payment amount shall not exceed $164,500. In addition, "BurbankFSA" will provide the "District" with a quarterly report, which will include information on the campus served, number of therapists assigned, number of students served, and units of care provided and primary and secondary referral trends.

IN WITNESS WHEREIN

The parties hereto have executed this agreement to be as of the day and first above written.
The contract is effective July 1, 2026, to June 30, 2027, ending at 12:00 PM unless terminated earlier as stated herein.

BURBANK UNIFIED SCHOOL DISTRICT
1900 W. Olive Ave., Burbank, CA 91506

SIGNATURE: _____ DATE: _____
Oscar Macias, Ed.D., Interim Superintendent

FAMILY SERVICE AGENCY OF BURBANK
2721 West Burbank Boulevard Burbank, CA 91505

SIGNATURE: _____ DATE: _____
Laurie Bleick, Executive Director

Burbank Unified School District
Instructional Services

REPORT TO THE BOARD

TO:	Members of the Board of Education
FROM:	Peter Knapik, Assistant Superintendent of Educational Services
PREPARED BY:	Robyn Anders, Director, Instructional Technology & Accountability
SUBMITTED BY:	Laura Erisman, Administrative Secretary
DATE:	July 25, 2026
SUBJECT:	AP Language Textbook (Lottery Textbook Fund)

Background

During the 2025-2026 school year, the Burbank Unified School District reviewed Advanced Placement/College Board approved AP Language textbooks for secondary schools.

2025-2026 District-wide Goal(s):

1. Students will be career/college ready via high-quality instruction.

Discussion/Issues

AP Language teachers reviewed Advanced Placement/College Board approved AP Language Textbooks and are in favor of the Bedford Freeman & Worth AP Language Textbooks.

Fiscal Implications

The fiscal impact of the AP Language Textbook Adoption is not to exceed $61,000. The cost will be paid from appropriation number, 01.0-63000-0-11100-10000-4110-742-9000 (lottery textbook funds)

Recommendations

Peter Knapik, Assistant Superintendent of Educational Services and Robyn Anders, Director of Instructional Technology, recommends the Board of Education adopt the Bedford Freeman & Worth AP Language Textbook. Not to exceed $61,000 (01.0-63000-0-11100-10000-4110-742-9000 Lottery Textbook Funds), as presented.

This price quote is good for 60 days. BFW High School Publishers is committed to delivering the best value for the program you have adopted. Pricing herein may reflect package discounts. Removing or editing components may cancel any package discounting applied to component items. Prices subject to change, including annual increases in November. Shipping fees are estimated; actual shipping fees may vary.

Purchase Orders: Please attach a copy of this price quote to your purchase order and submit your purchase order to:

MPS 16365 James Madison Highway Gordonsville, VA 22942
Email: highschool@mpsvirginia.com / Phone: (540) 672-7744

Quote Number	00142927	Prepared By	Rachael Babcock
Created Date	6/17/2026	Phone	+1 6469374824
		Email	rbabcock@bfwpub.com

Bill To	John Burroughs High School 1920 W Clark Ave Burbank, California 915061999 United States	Ship To	BUSD Facilities Attention: Laura Erisman 510 S. Shelton St. Burbank, California 91506 United States

Itemized Products

ISBN	EAN	Product	Edition	Author	Sales Price	Quantity	Total Price
1319409253	9781319409258	Language of Composition	4	Renee Shea;Lawrence Scanlon;Robin Aufses;Megan M. Harowitz;Katherine Cordes;Carlos Escobar	USD 114.98	450.00	USD 51,741.00

Itemized Product Total: USD 51,741.00

Free Product: Please include in your PO:

ISBN	EAN	Free Product	Edition	Author	Net Price	Quantity	Your Price
1319469213	9781319469214	Teacher's Edition with Online Teacher Resources for The Language of Composition	4	Renee Shea;Lawrence Scanlon;Robin Aufses;Megan M. Harowitz;Katherine Cordes;Carlos Escobar	USD 499.98	4	$0.00
1319574858	9781319574857	Test Bank for The Language of Composition	4	Renee Shea;Lawrence Scanlon;Robin Aufses;Megan M. Harowitz;Katherine Cordes;Carlos Escobar	USD 499.98	4	$0.00

Total Available for Purchase USD 0.00

Shipping Information

Schools are typically tax exempt however if your school is **NOT** tax exempt, please note that your local tax rate will apply to this quote.

Shipping Location Continental US and Puerto Rico

Shipping Fees: USD 2,587.05
Special Shipping Fees: USD 0.00
Total Shipping Fees: USD 2,587.05

Grand Totals

Itemized Products + Shipping Fees: USD 54,328.05

Instructor Resources

Digital Adopters: Instructor resources will be available within your product; no action needed

Print Only Adopters: Instructor resources can be unlocked by visiting www.bfwpub.com/AdopterTRM

Digital Subscription Terms

Digital subscription terms: With respect to each product, the number of licenses allocated to you will be determined by multiplying the quantity purchased by the number of uses (where use = year). [Example: 100 units of a 6-use product = 600 licenses.]

Access to each title will expire on the first to occur of (1) all purchased units which would be available over the course of the number of uses have been utilized, or (2) the number of uses has transpired utilizing the following calculation: utilizing July 5 as the start of a new year, (i) If the invoice date falls between January 1 and September 30, the end date of the subscription term shall be calculated as the invoice year plus the number of uses indicated [Example: 100 units of a 6-use product is invoiced on April 15, 2023. The end date based on uses purchased = July 4, 2029]; and (ii) If the invoice date falls between October 1 and December 31, the end date of the subscription term shall be calculated as invoice year plus the number of uses indicated + 1]. [Example: 100 units of a 6-use product is invoiced on November 15, 2023. The end date based on uses purchased = July 4, 2030.]

For complete subscription terms, see bfwpub.com/subscription-terms. Your issuance of a purchase order based on this quote or your payment for the courseware subscription signifies your affirmative understanding and acceptance of these terms.

License uses are not restricted during your subscription term, so as not to inhibit or impede the learning process, but all uses will count toward your purchase quantity based on the above calculation. If you exceed the quantity purchased, you will receive an invoice for the number of licenses used beyond those purchased.

The New Edition Option: If chosen at the time of initial purchase, the New Edition option permits the one-time option to upgrade to a new courseware edition at any time within your active courseware subscription term. It is your responsibility to inform your BFW representative when you are ready to proceed with the upgrade. The New Edition Option does not apply to e-books and applies exclusively to digital courseware and not print products.

Miscellaneous Information

Sole Source Statement: Competition in providing the above named products is precluded by the existence of a copyright. There are no like products available for purchase that serve the same purpose because of exclusive distribution/marketing rights. These products should be purchased directly from BFW (MPS) or its approved depositories. Purchases from any other source would not ensure the item's authenticity/warranty. Unapproved 3rd party vendors cannot provide packages, digital materials or teaching materials. BFW (MPS) cannot provide these items to a school if the student edition has been purchased through a third party. We are the sole source for these items and packages.

Note for Canadian Users: Please note that invoices are issued in CAD, but if payment is to be made via credit card, it will be processed through our US Bank and an exchange rate fee will be applied.

NOTE: If you plan to place an order and will require a signed data agreement, please send to your rep as soon as possible. Agreement reviews take an average of 1-3 weeks to review.

Burbank Unified School District
Business Services

REPORT TO THE BOARD

TO:	Members of the Board of Education
FROM:	Jason Hasty, Assistant Superintendent of Business Services
PREPARED BY:	Jason Hasty, Assistant Superintendent of Business Services
SUBMITTED BY:	Terri Ramirez-Adams, Senior Administrative Assistant
DATE:	June 25, 2026
SUBJECT:	Approval of Consulting Services Agreement with District Advocates Group, a Division of Urban Futures, Inc., for Facilities and Bond Program Consulting Services

---

Background:

The District is continuing to advance implementation of its capital improvement priorities and bond-funded facilities program. To support this work, the District seeks consulting services to assist with facilities planning, project development, procurement support, construction administration, stakeholder communications, and related bond program support services.

At the June 4, 2026 Board meeting, District Advocates Group, a Division of Urban Futures, Inc., provided an informational presentation regarding the proposed facilities and bond program consulting services. No Board action was requested at that time. The item is now being brought forward for Board approval of the Consulting Services Agreement.

The proposed agreement with District Advocates Group, a Division of Urban Futures, Inc., would provide consulting services to support the District's facilities and capital program efforts.

Discussion/Issues:

The proposed Consulting Services Agreement is between Burbank Unified School District and District Advocates Group, a Division of Urban Futures, Inc., and would become effective upon full execution. The agreement is for an initial term of three years, with the option to extend for successive one-year periods upon mutual written agreement.

Under the agreement, the consultant would provide support in the following general areas:

- mentorship and capacity development for Facilities staff and District leadership;
- pre-construction planning, project development, and capital readiness;
- procurement and contract management support;
- design management and construction administration support;
- ongoing reporting and stakeholder communications;
- grant strategy and supplemental funding support;
- program cost review and invoice support; and
- vendor, contractor, and project documentation coordination.

The agreement specifies that these services are non-municipal advisor services and are primarily intended to be performed remotely, with in-person support provided when reasonably necessary for matters such as Board meetings, Bond Oversight Committee meetings, and project site meetings requiring physical attendance.

Compensation under the agreement is a fixed fee of $480,000 annually, payable in monthly installments of $40,000, with first and last payments subject to proration depending on the start and end dates of the agreement. The agreement also allows for reimbursement of actual out-of-pocket expenses not to exceed $12,000 per year. The agreement provides that fees for services will be paid from bond proceeds or other allowable funding sources.

The agreement may be terminated by either party for material breach if not cured within 30 days, by mutual written consent, or by the District on an annual anniversary date with 30 days' written notice if the District determines the consultant's performance is unsatisfactory or the services are no longer required.

Fiscal Impact:

The annual cost of the agreement is $480,000, plus reimbursement of approved out-of-pocket expenses not to exceed $12,000 per year, for a total annual not-to-exceed amount of $492,000. Over the initial three-year term, the total not-to-exceed amount is $1,476,000. The cost of these services will be funded from the Measure ABC Bond.

Recommendation:

Jason Hasty, Assistant Superintendent of Business Services, recommends that the Board of Education approve the Consulting Services Agreement with District Advocates Group, a Division of Urban Futures, Inc., for facilities and bond program consulting services, for a total annual not to exceed amount of $492,000. Over the initial three-year term, the total not to exceed amount is $1,476,000, funded from Measure ABC Bond Funds, and authorize the Superintendent or designee to execute the agreement pursuant to BUSD-AR 3314, as presented.

CONSULTING SERVICES AGREEMENT

This CONSULTING SERVICES AGREEMENT (this "Agreement") is dated as of the latest date set forth on the signature page hereto (the "Effective Date") and is entered into by and between District Advocates Group, a Division of Urban Futures, Inc. a California corporation ("Consultant"), and Burbank Unified School District ("District"). This Agreement is for Non-Municipal Advisor Services.

RECITALS

WHEREAS, District wishes to complete capital projects (the "Projects") and desires that Consultant provide to District certain Consulting Services (defined below) with respect to the Projects; and

WHEREAS, Consultant desires to provide to District certain Consulting Services with respect to the Projects on the terms and subject to the conditions set forth in this Agreement.

NOW, THEREFORE, in consideration of the mutual covenants, agreements, representations, and warranties contained in this Agreement, the parties agree as follows:

AGREEMENT

1. **CONSULTING SERVICES**. District hereby retains Consultant to perform the Project Consultant Services set forth on Exhibit A hereto ("the Consulting Services"); and Consultant hereby agrees to perform the Consulting Services pursuant to the terms and conditions of this Agreement.

2. **EFFECTIVE DATE, TERM AND CONDITIONS**. This Agreement shall be effective as of the Effective Date and shall remain in effect for three (3) years or until the Agreement is terminated as set forth below. The parties may extend the Term for successive 1-year (one-year) periods upon mutual written agreement, or otherwise as the parties may agree in writing.

3. **COMPENSATION**. Compensation for the Consulting Services provided to District pursuant to this Agreement shall be as set forth in this Section 3. Fees for Project Consultant Services shall be paid out of proceeds received by the District resulting from the sale of Bonds or from other allowable sources.

a. Fees.

i. For Project Consultant Services, District shall pay to Consultant a fixed fee of Four Hundred Eighty Thousand Dollars ($480,000) annually, payable monthly in equal installments of Forty Thousand Dollars ($40,000) on the last day of each month. The first and last payments may be billed on a pro rata basis depending on the start and end dates of the

Agreement. The parties acknowledge and agree that the level of effort required of Consultant may increase or decrease during any given period depending on Project needs, and that, notwithstanding any such variation, the monthly fee shall remain consistent in order to simplify budgeting, forecasting, and contract administration for the District.

ii. District shall reimburse Consultant for out-of-pocket expenses incurred by Consultant in the course of performance of Consulting Services at the actual cost of such expenses, not to exceed Twelve Thousand Dollars ($12,000) per year. Payment for any expenses pursuant to this Section shall be made at the next following due date for payment of a fee pursuant to Section 3(a).

4. **COVENANTS**.

a. District.

i. Access to Personnel. District will cooperate with Consultant by providing opportunities to consult with District personnel as Consultant deems reasonably necessary to perform the Consulting Services.

ii. Information. District agrees to provide, on a timely basis, and to the best extent possible, all necessary and accurate information reasonably requested by Consultant for the purpose of performing the Consulting Services.

iii. Additional Professional Services. District agrees to provide or authorize additional professional services (e.g., architects, engineers, construction managers,) as Consultant deems reasonably necessary to complete the Consulting Services and the Bond issuance.

iv. Further Assurances. District agrees to take such further actions as may be necessary or appropriate to effectuate, carry out and comply with all of the terms of this Agreement and the transactions contemplated hereby.

b. Consultant.

i. Compliance with Laws. Consultant shall, at all times, comply with all laws, rules and regulations related to the subject matter of this Agreement and to which Consultant is subject.

ii. Non-Discrimination. Consultant shall not discriminate on the basis of a person's actual or perceived race, religious creed, color, national origin, ancestry, age, marital status, pregnancy, physical or mental disability, medical condition, genetic information, veteran status, gender, gender identity, gender expression, sex, or sexual orientation in employment or operation of its services.

iii. Further Assurances. Consultant agrees to take such further actions as may be necessary or appropriate to effectuate, carry out and comply with all of the terms of this Agreement and the transactions contemplated hereby.

5. **TERMINATION**.

a. This Agreement may be terminated prior to the conclusion of the Term as follows:

i. By either party upon the other party's material breach of any of its representations, warranties or obligations under this Agreement, provided that such breach is not cured within thirty (30) days of receipt of notice specifying the breach.

ii. At any time upon mutual written consent of the Parties.

iii. At the annual anniversary date of the executed contract, the District may terminate this Agreement with thirty (30) days' written notice if, after a review, the District determines that the Consultant's performance was unsatisfactory or that the Consulting Services are no longer required.

6. **LIMITATION OF LIABILITY**.

a. Consultant Liability. The parties agree that Consultant's officers, directors, agents and employees shall not be personally liable to District for any damages in connection with this Agreement. Consultant shall be solely liable for any finally determined damages in connection with this Agreement for which Consultant is deemed liable.

b. Limitation of Consultant Liability. Except to the extent finally determined to have resulted from the gross negligence, fraud or willful misconduct of Consultant, Consultant's liability to pay damages for any damages, losses and claims incurred by District, regardless of the theory of liability asserted, is limited to no more than an amount equal to the total amount of fees paid to Consultant under this Agreement. In addition, Consultant shall not be liable in any event for lost profits, revenue or goodwill, or any other consequential, indirect, incidental, punitive, exemplary or special damages.

c. District Liability. The parties agree that District's officers, directors, agents, and employees shall not be personally liable to Consultant for any damages in connection with this Agreement. District shall be solely liable for any finally determined damages in connection with this Agreement for which District is deemed liable.

d. Limitation of District Liability. Except to the extent finally determined to have resulted from the gross negligence, fraud or willful misconduct of District, District's liability to pay damages for any damages, losses and claims incurred by Consultant, regardless of the theory of liability asserted, is limited to no more than an amount equal to the total amount of fees

to be paid to Consultant under this Agreement. In addition, District will not be liable in any event for lost profits, revenue or goodwill, or any other consequential, indirect, incidental, punitive, exemplary or special damages.

e. Survival of Liability. The provisions of this Section 6 shall survive the expiration or termination of this agreement.

7. **CONFIDENTIALITY OF INFORMATION**. It is mutually agreed that Consultant shall regard all information received during the performance of services pursuant to this Agreement ("Confidential Information") as confidential and shall not disclose Confidential Information to any other person without prior written consent of District. Confidential Information shall not include information that: (i) is, as of the time of its disclosure, or thereafter becomes, part of the public domain through a source other than Consultant; or (ii) is subsequently learned from a third party not under a confidentiality obligation to District. In addition, Consultant shall be entitled to disclose Confidential Information to the extent such disclosure is requested by the order of a court of competent jurisdiction, administrative agency, or other governmental body, provided that Consultant shall provide prompt, advanced written notice thereof to enable District to seek a protective order or otherwise prevent such disclosure. The confidentiality obligations of Consultant shall survive the expiration or termination of this Agreement.

8. **ADDITIONAL MATTERS**.

a. Governing Law; Jurisdiction. It is expressly understood and agreed that this Agreement and all questions arising hereunder shall be construed according to the laws of the State of California, without giving effect to conflicts of law principles. All actions or proceedings arising directly or indirectly from this Agreement shall be litigated in courts located within San Joaquin County, California. The parties consent to the jurisdiction thereof and the parties further agree not to disturb such choice of forum.

b. Independent Contractor: Both parties hereto in the performance of this Agreement will be acting in an independent capacity and not as agents, employees, partners or joint ventures with one another. Neither the Consultants nor the Consultants' employees are employees of the District and are not entitled to any of the rights, benefits, or privileges of the District's employees, including but not limited to retirement, medical, unemployment, or workers' compensation insurance.

Neither the District nor its officers, agents or employees shall have any control over the conduct of the Consultant or any of the Consultant's employees except as herein set forth, and the Consultant expressly agrees not to represent that the Consultant or the Consultant's agents, servants, or employees are in any manner agents, servants or employees of the District, it being understood that the Consultant, its agents, servants, and employees are as to the District wholly independent Consultants and that the Consultant's obligations to the District are solely such as are prescribed by this Agreement.

c. Conflicts of Interest: No officer or employee of District shall have any financial interest, direct or indirect, in this Agreement nor shall any such officer or employee participate in any decision relating to the Agreement which affects his financial interest or the financial interest of any corporation, partnership or association in which he is, directly or indirectly, interested, in violation of any State statute or regulation. The Consultant warrants that it has not paid or given and will not pay or give any third party any money or other consideration for obtaining this Agreement.

Consultant is a division of Urban Futures, Inc., a registered Municipal Advisor with the U.S. Securities and Exchange Commission and the Municipal Securities Rulemaking Board. Urban Futures, Inc., may be or have been the municipal advisor for the District. This agreement is separate and distinct from the Municipal Advisory agreement under separate cover.

d. Successors and Assigns. Except as otherwise provided herein, this Agreement shall not be assignable by either party without the express written consent of the other party hereto. Nothing in this Agreement, express or implied, is intended to confer upon any party other than the parties hereto or their respective successors and assigns any rights, remedies, obligations, or liabilities under or by reason of this Agreement, except as expressly provided in this Agreement.

e. Attorneys' Fees. In the event of any action to enforce or interpret this Agreement, including without limitation the recovery of damages for its breach, the prevailing party shall be entitled to recover from the other party its reasonable attorneys' fees and costs. Any judgment or order entered in such action shall contain a specific provision providing for the recovery of attorneys' fees and costs incurred in enforcing such judgment.

f. Amendments to Agreement. This Agreement may not be modified, amended or supplemented except by written instrument executed by all parties hereto.

g. Notice. All notices to be given by the parties hereto and other communications hereunder shall be in writing and shall be deemed effectively given: (i) upon personal delivery to the party to be notified; (ii) when sent by confirmed telex, electronic mail or facsimile if sent during normal business hours of the recipient, if not, then on the next business day; (iii) one (1) day after deposit with a nationally recognized overnight courier, specifying next day delivery, with written verification of receipt; or (iv) four days after deposit with a United States Post Office, first class postage prepaid and registered. All communications shall be sent as follows:

To Consultant:

District Advocates Group, a Division of Urban Futures, Inc.
1470 Maria Lane, Ste. 315
Walnut Creek, CA 94596
Attn.: Jon Isom, Managing Principal
Telephone: (925) 478-7450
E-mail: jon@isomadvisors.com

To District:

Burbank Unified School District
1900 West Olive Ave.
Burbank, CA 91506-2438
Attn.: Dr. Oscar Macias, Interim Superintendent
Telephone: (818) 729-4400
E-mail: oscarmacias@burbankusd.org

h. Severability. If one or more provisions of this Agreement are held to be unenforceable under applicable law, such provision shall be excluded from this Agreement and the balance of the Agreement shall be interpreted as if such provision were so excluded and shall be enforceable in accordance with its terms.

i. Entire Agreement. This Agreement (including the Exhibits attached hereto) contains the entire understanding of the parties in respect of its subject matter and supersedes all prior agreements and understandings (oral or written) between the parties with respect to such subject matter. The Exhibits attached hereto constitute a part hereof as though set forth in full herein.

j. Counterparts. This Agreement may be executed in any number of counterparts, each of which shall be deemed an original, but all of which together shall constitute one and the same instrument.

IN WITNESS WHEREOF, the parties have duly executed this Agreement as of the dates set forth below.

CONSULTANT:

District Advocates Group, a Division of Urban Futures, Inc.

By: _____
Name: Jonathan Isom
Title: Chief Executive Officer

Dated: _____ ___, 2026

DISTRICT:

Burbank Unified School District

By: _____
Name: Dr. Oscar Macias
Title: Superintendent

Dated: _____ ___, 2026

EXHIBIT A
PROJECT CONSULTANT SERVICES

The Consultant Services described below are NOT municipal advisory services and Consultant is not providing advice to or on behalf of a municipal entity or obligated person with respect to municipal financial products or the issuance of municipal securities, including advice with respect to the structure, timing, terms, and other similar matters concerning such financial products or issues. The Services are related to pre and post issuance tasks.

The Consulting Services to be provided under this Agreement are intended to be performed primarily in a remote format, and routine in-person representation is not anticipated as part of the standard scope of services. Consultant shall provide in-person support when reasonably necessary for activities that specifically require physical attendance, including, without limitation, Board meetings, Bond Oversight Committee meetings, and project site meetings where in-person representation is required.

Mentorship and Capacity Development

- Provide mentorship and professional development to Facilities staff and other District leaders as directed by the Superintendent and CBO.
- Provide hands-on coaching in operational systems, regulatory requirements, project controls, communication protocols, and industry best practices.
- Assist in defining and documenting internal District processes, workflows, and cross-department coordination structures.
- Help identify training needs and support the development of a sustainable staffing model, roles, and responsibilities.

Pre-Construction Planning, Project Development, and Capital Readiness

- Support strategic planning and advisement to staff in developing long-range facilities priorities and future capital program direction.
- Assist in refining internal processes and systems within Facilities and Business Services to support project planning, procurement, budgeting, and implementation.
- Coordinate updates to District Facility Standards, Educational Specifications, and related guiding documents.
- Identify and assess risks associated with project scope, schedule, and budget and develop mitigation strategies.
- Assist with development of project budgets, conceptual estimates, forecasting, and funding scenarios using District funds, developer fees, or potential state funding.
- Assist the District with updating its eligibility under the State School Facility Program and provide strategic guidance on opportunities to maximize modernization, new construction, and hardship funding.

Procurement and Contract Management

- Advise on procurement strategy for consultant teams including architects, engineers, project/construction managers, and specialty firms.
- Support preparation and management of RFQ/RFP processes using templates approved by District legal counsel, including scoring, interviews, and fee negotiation.
- Assist the District with procuring construction projects, materials, and furniture/equipment, including support for Design-Bid-Build, Design-Build, CM Multi-Prime, and Lease-Leaseback construction documents, front-end specifications, and full bid process support.
- Assist with monitoring consultant and contractor compliance with scopes of work, contracts, and required deliverables.

Design Management

- Confirm and refine project prioritization and conceptual planning based on the Facilities Master Plan or Needs Assessment.
- Advise on project delivery methods and assist in evaluating appropriate approaches for identified projects.
- Support and participate in design team meetings and ensure District stakeholders are informed of design decisions and impacts.
- Assist with compliance related to safety standards, labor compliance, environmental regulations, and other local, state, or federal requirements.
- Coordinate and support value engineering sessions to optimize cost, design, and program requirements.

Construction Administration

- Support budget management coordination with architects, contractors, and specialty consultants.
- Assist with applications for State School Facilities Program funding, including eligibility updates and project submissions.
- Provide program-level construction oversight to help ensure alignment with District goals, schedule, and budget.
- Support District review and management of change orders, including documentation, approvals, and budget impact assessment.
- Facilitate construction meetings and provide updates related to status, risks, and mitigation strategies.
- Assist with monitoring safety protocols and quality assurance measures during construction.

Ongoing Reporting

- Assist with preparation of Board memoranda related to facilities, procurement, or project approvals.
- Support the development of internal reporting tools including project status summaries, budget updates, and risk logs.

- Provide periodic reporting to District leadership on project progress, schedule, and issues requiring administrative attention.

Stakeholder Communications

- Assist in the development of communications materials for staff, community members, and the Board related to facilities updates, project progress, and planning activities.
- Support District leadership in preparing materials for community meetings, Board presentations, and site-level communication.
- Help coordinate messaging to ensure clarity, consistency, and alignment with District goals and expectations.
- Advise on communication strategies that support transparency and trust with stakeholders.

Grant Strategy and Supplemental Funding

- Identify and evaluate state and federal grant opportunities including CTE, modernization, hardship, safety, and energy programs.
- Support preliminary assessment and planning required to position the District for applicable funding opportunities.

Program Cost Review and Invoice Support

- Review routine project costs to support cost control, funding alignment, and overall program accountability.
- Review project billings for consistency with approved contracts, authorized scopes of work, and applicable project budgets.
- Evaluate invoices for completeness, accuracy, appropriate supporting documentation, and alignment with work performed.
- Assist with invoice approval processes by coordinating review comments, identifying required corrections, and supporting timely processing.
- Monitor routine cost activity to help identify potential billing discrepancies, duplicate charges, unauthorized costs, or charges assigned to the incorrect project.
- Support financial reporting by summarizing project cost information, billing status, and other relevant financial data for District review.
- Provide program-level input to help ensure project expenditures remain consistent with approved funding sources, program requirements, and District procedures.

Vendor and Contractor Coordination

- Assist with scheduling and facilitating meetings with vendors, construction managers, contractors, and subcontractors as required to maintain project momentum.
- Support pre-bid site walks for vendors, helping to ensure they have the necessary information to submit accurate and competitive proposals.
- Assist as a point of contact for project-related communication, helping to bridge on-site and remote efforts.
- Support resolution of logistical challenges, such as scheduling conflicts or resource availability, to help minimize disruptions.

Project Documentation and Reporting

- Assist with reviewing and tracking project documentation, including schedules, vendor agreements, and progress reports, for accuracy and completeness.
- Support maintenance of detailed records of project milestones, vendor interactions, and site observations for District reference.
- Coordinate with the District's program manager to provide updates and insights for potential Board presentations.

Remote Coordination and Communication

- Coordinate remotely as needed, leveraging digital tools to support progress monitoring and stakeholder communication.

Limitation on Financial Reporting Services

The Consulting Services described herein do not include comprehensive financial tracking, financial reporting, or account reconciliations. Responsibility for maintaining official financial records, preparing formal financial reports, reconciling project or program accounts, and tracking expenditures against District accounting records shall remain with the District or its designated financial or accounting representatives.

###

BURBANK UNIFIED SCHOOL DISTRICT
Human Resources Services

REPORT TO THE BOARD

TO:	Members of the Board of Education
FROM:	Human Resources Services
PREPARED BY:	Lauren Trammell, Executive Assistant of Human Resources Services
SUBMITTED BY:	Lauren Trammell, Executive Assistant of Human Resources Services
DATE:	June 25, 2026
SUBJECT:	Approval of Job Description for Athletic Trainer

Background

The Athletic Trainer is a is a new classified position within the California School Employees Association (CSEA) bargaining unit that supports the health, safety, and well-being of student-athletes participating in District athletic programs. As participation in athletics continues to grow and the medical needs of student-athletes become increasingly complex, the District recognizes the importance of providing professional athletic training services to support injury prevention, emergency response, rehabilitation, and athlete wellness.

The attached job description establishes the responsibilities, qualifications, and expectations for the Athletic Trainer position. The position will provide direct support to student-athletes by evaluating athletic injuries, coordinating treatment and rehabilitation plans, monitoring recovery, supporting return-to-play decisions, and assisting with emergency medical response during athletic activities.

The Athletic Trainer will collaborate closely with coaches, administrators, school nurses, parents, physicians, and community healthcare providers to ensure safe participation in athletic programs and compliance with California Interscholastic Federation (CIF) regulations and District policies.

Approval of this job description provides a clear framework for the position's responsibilities and supports the District's commitment to student safety, wellness, and athletic program excellence. Upon approval, the District will move forward with the hire of two employees for this job.

Discussion/Issues

- Provides injury evaluation, treatment, rehabilitation, and follow-up care for student-athletes.
- Responds to athletic injuries and medical emergencies during practices, competitions, and school-sponsored athletic events.
- Monitors concussions and other sports-related injuries and coordinates return-to-play protocols.
- Develops and implements injury prevention and athlete wellness programs.
- Maintains athlete medical records and required health documentation.
- Coordinates emergency action plans and medical response procedures for athletic facilities and events.

- Provides education to students, parents, coaches, and staff regarding injury prevention, hydration, nutrition, and athlete safety.
- Assists with training related to concussion awareness, CPR/AED procedures, heat illness prevention, and emergency preparedness.
- Maintains athletic training facilities, medical supplies, and equipment.
- Ensures compliance with CIF regulations, applicable state and federal laws, and District procedures related to student-athlete health and safety.
- This position supports District priorities related to:
- Student health, safety, and wellness.
- Safe participation in interscholastic athletics and extracurricular activities.
- Compliance with CIF regulations and student-athlete safety requirements.
- Injury prevention and emergency preparedness.
- Positive student engagement and school connectedness through athletics.
- Comprehensive support services that promote student success and well-being.

Fiscal Impact

Approval of the job description itself has no fiscal impact. Any future action related to the establishment, recruitment, or appointment of the position would be brought forward separately for Board consideration through the District's budget development and staffing processes.

Recommendation

Human Resources Services recommends that the Board of Education approve the Job Description for Athletic Trainer, effective June 26, 2026, as presented.

Range 60

BURBANK UNIFIED SCHOOL DISTRICT

ATHLETIC TRAINER

Classification: Athletic Trainer
Bargaining Unit: CSEA
Salary Range: 60
Work Year: 11 Months
Work Day: 8 Hours
FLSA Status: Non-Exempt

Salary Range: $63,866 – $81,752 annually, contingent upon qualifications, experience, and placement on the negotiated CSEA salary schedule.

BASIC FUNCTION

Under the direction of the Principal or designee, provides athletic training services to student-athletes participating in district athletic programs. The Athletic Trainer is responsible for injury prevention, evaluation, treatment, rehabilitation, emergency response, and health education for student-athletes. The Athletic Trainer collaborates with coaches, parents, school personnel, healthcare providers, and community agencies to promote student safety and compliance with CIF regulations and District policies.

DISTINGUISHING CHARACTERISTICS

The Athletic Trainer is a specialized classified position requiring professional certification and expertise in sports medicine, injury prevention, rehabilitation, emergency care, and student-athlete health management. The position exercises independent judgment within established professional standards and District guidelines.

ESSENTIAL DUTIES AND RESPONSIBILITIES

- Evaluate athletic injuries and determine appropriate treatment and follow-up care.
- Provide first aid and emergency medical care for injured student-athletes.
- Develop and implement rehabilitation programs for injured athletes.
- Monitor athlete recovery and coordinate return-to-play activities.
- Assess and monitor concussions and other sports-related injuries.
- Refer students to physicians and other healthcare providers as appropriate.
- Maintain confidentiality of student health information.
- Provide athletic training coverage for practices, games, tournaments, and other assigned athletic events.
- Coordinate medical coverage and emergency response procedures for athletic activities.
- Establish and implement injury prevention programs in coordination with administration and coaches.

- Monitor environmental conditions and advise regarding athlete safety.
- Support compliance with CIF safety requirements and health regulations.
- Develop and maintain emergency action plans for athletic facilities and events.
- Maintain and inspect emergency medical equipment, including AEDs.
- Coordinate emergency response procedures with school personnel and emergency responders.
- Participate in safety drills and preparedness activities.
- Maintain accurate records of injuries, treatments, and rehabilitation plans.
- Complete required incident reports and medical documentation.
- Maintain athlete medical clearance and return-to-play records.
- Ensure compliance with HIPAA, FERPA, CIF regulations, and District procedures.
- Maintain required certifications and professional development.
- Provide education to students, parents, and coaches regarding injury prevention, hydration, nutrition, and athlete wellness.
- Communicate with physicians, parents, school nurses, coaches, and administrators regarding student-athlete health needs.
- Participate in meetings related to student-athlete welfare and athletic program safety.
- Maintain athletic training facilities in a safe and organized condition.
- Monitor inventory of athletic training supplies and equipment.
- Recommend purchases of supplies and equipment as needed.
- Assist in maintaining budgets related to athletic training supplies and equipment.
- Maintain sanitation and infection control standards within athletic training facilities.
- Perform related duties as assigned.

KNOWLEDGE OF

• Principles and practices of athletic training and sports medicine.
• Injury prevention, evaluation, treatment, and rehabilitation techniques.
• Emergency medical response procedures.
• CPR, First Aid, AED, and concussion management protocols.
• CIF regulations and athlete safety requirements.
• Recordkeeping and report preparation methods.
• Applicable federal and state laws related to student health records.

ABILITY TO

• Assess injuries and provide appropriate care.
• Respond calmly and effectively during emergencies.
• Develop and implement rehabilitation programs.
• Maintain accurate records and documentation.
• Communicate effectively with students, parents, staff, and medical professionals.
• Establish and maintain cooperative working relationships.
• Work independently and exercise sound judgment.
• Maintain confidentiality of sensitive information.

EDUCATION AND EXPERIENCE

- Bachelor’s degree from an accredited college or university in Athletic Training, Sports Medicine, Kinesiology, or a closely related field.
- Experience working as a certified Athletic Trainer in a school, collegiate, clinical, or athletic setting is preferred.

PHYSICAL DEMANDS

The physical requirements indicated below are examples of the physical aspects that this position must perform in carrying out essential job functions.

- Ability to stand and walk for extended periods of time.
- Ability to sit, bend, stoop, kneel, crouch, reach, and climb as necessary.
- Ability to lift, carry, push, and pull athletic equipment, medical supplies, and injured athletes requiring assistance.
- Ability to frequently lift and carry up to 50 pounds and occasionally lift or assist with weights exceeding 75 pounds with appropriate assistance.
- Ability to perform physical assessments, treatments, rehabilitation exercises, and emergency response procedures.
- Ability to hear and speak to exchange information in person and by telephone.
- Ability to monitor student activities, evaluate injuries, read medical records, and operate equipment.
- Ability to respond quickly and effectively in emergency situations.

LICENSES, CERTIFICATES, AND REQUIREMENTS

- Current Board of Certification (BOC) certification as an Athletic Trainer.
- Current Athletic Trainer Licensure issued by the State of California, if required by law.
- National Athletic Trainers' Association (NATA) certification required.
- Valid CPR/AED and First Aid certifications.
- Valid California Driver’s License.
- Must successfully pass a Department of Justice background check and pre-employment screening requirements.

WORKING CONDITIONS

- Environment: Indoor and outdoor athletic facilities; office environment; exposure to weather conditions and athletic activities.
- Physical Demands: Standing and walking for extended periods; lifting and carrying athletic equipment and supplies; bending, kneeling, reaching, and responding to medical emergencies.
- Hazards: Exposure to athletic injuries, bodily fluids, communicable diseases, and outdoor environmental conditions.

EQUAL EMPLOYMENT OPPORTUNITY

The Burbank Unified School District is committed to equal opportunity for all individuals in education and employment. District programs, activities, and employment practices shall be free from unlawful discrimination, harassment, intimidation, and bullying based on actual or perceived race, color, ancestry, national origin, nationality, immigration status, ethnic group identification, ethnicity, age, religion, marital status, pregnancy, parental status, physical or mental disability, medical condition, sex, sexual orientation, gender, gender identity, gender expression, genetic information, or association with a person or group possessing one or more of these actual or perceived characteristics.

TITLE IX AND NONDISCRIMINATION NOTICE

The Burbank Unified School District does not discriminate on the basis of sex and prohibits sex discrimination in any education program or activity that it operates, as required by Title IX and California law. Inquiries regarding Title IX may be referred to the District's Title IX Coordinator, the U.S. Department of Education Office for Civil Rights, or both.

SALARY RANGE ALLOCATIONS FOR CLASSIFIED BARGAINING UNIT MEMBERS

CLASSIFICATION	RANGE	BASIS
Accounting Series		
Project and Accounting Analyst	66	A
Account Analyst	60	A
Financial Analyst	60	A
Benefits Analyst	60	A
Lead Payroll Technician	51	A
Payroll Technician/ Benefits Assistant	49	A
Budget/Accounting Technician	48	A
Project Accounting Technician	48	A
Accounting Assistant IV	47	A
Payroll Technician	47	A
Employee Benefits Technician	47	A
Accounting Assistant III	45	A
Accounting Assistant II	42	A
Senior School Finance Technician	40	A, B, E
Accounting Assistant I	33	A
Clerical Series		
Use of Facilities Coordinator/ Senior Administrative Assistant	60	A
Assessment and Accountability Technician	56	A
Administrative Secretary II	56	A
Special Education Data Systems Technician	52	A
Human Resources Analyst - Certificated	50	A
Human Resources Analyst Classified	48	A
Facilities Operations and Construction Technician	48	A
District Attendance and Fundraising Technician	46	A
Budget/Program Technician	45	A
Special Education Technician	45	A
Administrative Secretary I	45	A
Food Service Operations Technician	44	A
Facilities Service Assistant	44	A
Guidance/Program Technician II	44	B,C
School Office Manager-High School	43	A
School Office Manager-Middle School	43	A
School Office Manager-Elementary	43	C
Clerical Series (continued)		
School Office Manager-Special Programs/Alternative Education	43	C
School Office Manager-Cont.	43	B, C
School Office Manager – Adult School	43	A
School Office Manager-Children's Center	43	A
School Office Manager-Alternative School	43	C
School Office Manager-Independent Learning Academy	43	C
Senior Attendance and Data Technician-Adult School	43	A
Human Resources Technician	43	A
Senior Secretary	42	A, B
Registrar	42	A
Office Technician-Adult Education	42	A
Construction & Operations Secretary	41	A
Guidance/Program Technician I	41	B, C
College/Career Center Technician	41	B, C
School Office Manager-Satellite School	40	C
Senior Attendance Technician	39	A,B
CTE Technician	38	B,C
Office Technician Continuation	37	C
Counseling Assistant	37	B
Secretary III	37	A,C,D
Office Assistant-Adult Education	37	C
Personnel Clerk	37	A
Office Assistant Elementary	36	C
Office Occupations – Adult Ed	36	D
Attendance Technician	35	C
Secretary II	35	A,C,D
Secretary I	33	A
Food Service Series		
Food Service Utility Driver	42	A,C
Food Service Cook-Central Kitchen	41	D
Serving Kitchen Operator	40	D
Food Service Cook	38	A,D
Food Service Assistant	37	D
Barbecue Cook	37	D
Food Service Cashier-Elementary	37	D

CLASSIFICATION	RANGE	BASIS
Instructional Series		
Educational Interpreter II Deaf and Hard of Hearing	62	D
Educational Interpreter I- Deaf and Hard of Hearing	55	D
Paraeducator–Severe Behavioral II	47	D
Assistive Technology Technician	47	B
Paraeducator- Environmental Science Park	45	D
Educational Reader- Visually Impaired	45	D
Paraeducator-Severe Behavioral I	45	D
Behavior Intervention Assistant	45	D
Paraeducator-Severely Impaired	45	D
Paraeducator-Health Care	41	D
Paraeducator- At Risk Youth	39	D
Paraeducator -Children's Center II	39	D
Paraeducator- Deaf and Hard Of Hearing (DHH)	39	D
Paraeducator – Special Education	38	C,D
Paraeducator – English Language Learner	37	D
Paraeducator – Adult English Language Development	37	E
Paraeducator – Children's Center	37	A,C,D
Paraeducator – Primary Language Support	37	D
Instructional Resources Assistant	37	D
Paraeducator- Parent Education	36	E
Elementary Physical Education Assistant	36	D
Community Resource Assistant	37	D
Paraeducator	36	D
Volunteer Coordinator	36	D
Paraeducator – Adult Education/ Learning Center	36	E
Auxiliary Services		
Wellness and Behavior Specialist	60	D
Student Services and Attendance Specialist	57	A,C
Student Services and Attendance Specialist for Homeless and Foster Youth	57	A
Health Services Assistant-LVN/RN	56	D
Certified Occupational Therapy Assistant	53	C
Intervention Specialist for At-Risk Students	53	C,D
Speech-Language Pathology Assistant	53	D
Athletic Trainer	**60**	**D**

CLASSIFICATION	RANGE	BASIS
Auxiliary Series (continued)		
Children's Center Health Technician	45	A
Library Coordinator	41	C
Health Services Assistant	41	D
Career Vocational Assistant	40	D
Adult School ELL/ Office Specialist III	39	A,B,E
Senior Textbook Coordinator	38	A
Adult ELL/Office Specialist II	37	A,E
Library Coordinator - Elementary	36	C,D
Campus Supervisor	36	A,D,E
District Office Receptionist	36	A
Adult School ELL/ Office Specialist I	35	E
ELD Office Specialist I	35	D
Adult School Learning Center Technician	35	E
Campus Supervisor - Elementary School	35	D
Purchasing Series		
Lead Buyer	60	A
Buyer	47	A
Purchasing Technician	45	A
Purchasing Clerk	40	A
Operations Series		
1- Grounds Group		
Grounds Leadperson	57 (62)	A
Irrigation Specialist	50	A
Integrated Pest Control/ Grounds Technician	48	A
Grounds Technician	43	A
2- Custodian Group		
Custodial Foreman	51	A
Swimming Pool Custodian	44	A
Lead Custodian	43	A
Senior Custodian/Campus Supervisor Monterey High School/CDS	39	A
School Safety/Utility Custodian	39	A,C
Custodian	38	A
Utility Custodian	38	A
Children's Center Service Worker	38	A
3-Warehouse Group		
Print Reproduction/Warehouse Worker	47	A
Reprographics Technician	46	A
Lead Warehouse Worker	42	A
Utility Driver	41	A
Warehouse Worker	41	A

CLASSIFICATION	RANGE	BASIS
Maintenance Series		
Facilities Services Leadperson	62	A
Maintenace Leadperson	62	A
Electrician	58	A
HVAC Mechanic	57	A
Plant Engineer	57	A
Low-Voltage Electrician	56	A
Plumber	55	A
Glazier/Carpenter	53	A
Vehicle & Equipment Mechanic	53	A
Locksmith	53	A
Senior Facilities Worker-Plaster/Cement	53	A
Carpenter	52	A
Painter	52	A
Sheet Metal Mechanic	52	A
Roof Repair Technician	52	A
Facilities Worker	46	A
Technology Series		
Lead Information Technology Systems Analyst	72	A
Network Analyst	67	A
Systems Analyst	67	A
Information Technology Systems Analyst	67	A
Lead Technology Support Specialist	61	A
Technology Support Specialist II	60	A
Student Information Systems Analyst	59	A
User Support Specialist	59	A
System Support Specialist	57	A
Adult School Technology Support Specialist II	57	B
Technology Support Specialist I	49	A
Instructional Media Specialist-Middle School	46	B,C
Instructional Technology Media Specialist -Elementary	42	A,C,D

Addendum: The probationary period for a promoted employee shall be six (6) months after the effective date of promotion.

BURBANK UNIFIED SCHOOL DISTRICT
Human Resources Services

REPORT TO THE BOARD

TO:	Members of the Board of Education
FROM:	Human Resources Services
PREPARED BY:	Lauren Trammell, Executive Assistant of Human Resources Services
SUBMITTED BY:	Lauren Trammell, Executive Assistant of Human Resources Services
DATE:	June 25, 2026
SUBJECT:	Approval of Job Description for Communications and Multimedia Specialist II

Background

The Communications & Multimedia Specialist II is a is a new classified position within the California School Employees Association (CSEA) bargaining unit that supports the District's commitment to clear, transparent, and effective communication with students, families, staff, and the broader community. As digital communication platforms continue to evolve, the District requires dedicated expertise to support website management, social media engagement, multimedia production, visual storytelling, and public information efforts.

Under the direction of the Public Information Officer, this position is responsible for planning, developing, and managing digital and multimedia communications that support instructional programs, community engagement, District initiatives, Board communications, student recruitment, staff recruitment, and emergency communication efforts. The position serves as a key resource in ensuring that District messaging is timely, accurate, accessible, visually engaging, and aligned with organizational priorities.

The attached job description establishes the responsibilities, qualifications, and expectations for the Communications & Multimedia Specialist II and provides a framework for supporting the District's growing communication and public engagement needs.

Discussion/Issues

The Communications & Multimedia Specialist II:

- Develops, manages, and updates District website content and digital communication platforms.
- Creates professional-quality photography, videography, graphics, publications, presentations, and multimedia content.
- Serves as the District's primary photographer and videographer for events, ceremonies, classroom activities, and special programs.
- Manages content creation, publishing, and engagement across District social media platforms.
- Develops visual storytelling content that supports student enrollment, staff recruitment, community engagement, and public awareness efforts.
- Designs digital and print communication materials, including newsletters, brochures, flyers, infographics, annual reports, and promotional materials.

- Coordinates multimedia coverage of District events, including photography, videography, livestream support, and post-production editing.
- Supports Board presentations, community outreach initiatives, and strategic communication projects.
- Ensures digital communications comply with ADA, Section 508, and District accessibility standards.
- Supports crisis and emergency communication efforts through rapid development and dissemination of public information materials.
- Compiles communication analytics and engagement data to support continuous improvement of communication strategies.
- Collaborates with school sites and departments to highlight student success, District accomplishments, and organizational initiatives.
- This position supports District priorities related to:
- Transparent and effective communication with students, families, staff, and the community.
- Community engagement and public trust.
- Promotion of student achievement, District programs, and organizational accomplishments.
- Consistent branding and professional communication standards.
- Accessibility and compliance in digital communications.
- Emergency preparedness and crisis communication.
- Strategic outreach efforts that support enrollment, recruitment, and community awareness.

Fiscal Impact

Approval of the job description itself has no fiscal impact. Any future action related to the recruitment, hiring, or placement of this position will be brought forward separately through the District's budget development and staffing processes.

Recommendation

Human Resources Services recommends that the Board of Education approve the Job Description for Communications & Multimedia Specialist II, effective June 26, 2026, as presented.

Burbank Unified School District

Communications & Multimedia Specialist II

Classification: Classified (Hourly)
Salary: Classified Schedule, Range 60 ($69,600 – $89,184)
Work Year: 12 Months
Reports To: Public Information Officer

BACKGROUND
Burbank Unified School District (BUSD) serves a diverse student population and is committed to clear, transparent, and effective communication with students, families, staff, and the broader community. The District prioritizes timely and accurate information sharing, particularly in support of instructional programs, community engagement, and crisis response.

PURPOSE
Under the direction of the Public Information Officer, the Communications & Multimedia Specialist II plans, develops, and manages digital and multimedia communications for the District. The position is responsible for supporting the District's communication strategy through website management, social media, multimedia production, and content development.

This role ensures that District messaging is clear, consistent, visually engaging, and aligned with organizational priorities. The position supports day-to-day communication needs as well as major initiatives, events, and emergency communication efforts.

ESSENTIAL FUNCTIONS / RESPONSIBILITIES

- Assist in the conceptual design and layout of web pages, e-newsletters, and digital communications, applying user interface (UI), usability, and information architecture principles
- Develop and update web content using content management systems and basic scripting (e.g., HTML/CSS) to support functionality and user experience across devices
- Create and edit professional-quality videos for District communications, marketing campaigns, Board presentations, social media, and community outreach.
- Develop engaging visual storytelling content to support student enrollment, community engagement, staff recruitment, and public awareness efforts.
- Serve as the District's primary photographer and videographer for events, ceremonies, classroom activities, and special programs.
- Establish~~ed~~ district web design standards (e.g., W3C guidelines) that adhere to ADA and Section 508
- Support and maintain web and digital communication templates to support consistency in design, layout, and user experience across District platforms
- Ensure all multimedia content reflects District branding standards, communication goals, and professional presentation expectations.

- Maintain and update the District's website as necessary, ~~and~~ digital communication platforms, social media, ensuring content is current, accurate, and consistent with District standards
- Design and produce multimedia content, including photography, videography, graphics, presentations, publications, and digital media that promote District programs, achievements, initiatives, and events.
- Create and edit professional-quality videos for District communications, marketing campaigns, Board presentations, social media, and community outreach.
- Manage day-to-day content creation and publishing for District social media platforms, including developing posts, graphics, videos, and multimedia campaigns.
- Assist in the development and preparation of communication materials for District programs, District initiatives, special projects, strategic priorities and events
- Design digital and print communication materials including flyers, brochures, newsletters, infographics, annual reports, and promotional materials.
- Ensure digital and visual communications adhere to District branding and communication guidelines
- Support crisis and emergency communication efforts by preparing and posting digital content as directed
- Coordinate multimedia coverage of District events, including photography, videography, livestream support, and post-production editing.
- Maintain templates, digital assets, and communication tools to support consistency and efficiency
- Compile basic analytics and engagement data for review by the Public Information Officer
- Collaborate with school sites and departments to identify communication opportunities and develop content that highlights student success and organizational accomplishments.
- Maintain organized archives of digital content, communications, and media assets
- Support emergency and crisis communication efforts through rapid development of graphics, videos, social media content, and public information materials.
- Provide support for photography, video production, and multimedia content development
- Perform related duties as assigned

KNOWLEDGE, SKILLS, AND ABILITIES

Knowledge of:

- Principles and practices of digital communications and multimedia production
- Website content management systems and web design practices
- Design and production processes for print, web, photography, and multimedia content
- Graphic design fundamentals, including layout and visual presentation
- Methods for adapting visual and photographic content across multiple formats and platforms
- Basic copyright laws and fair use guidelines related to digital and creative content
- Basic web development concepts, including HTML, CSS, and general web publishing practices
- Social media platforms and standard posting practices

- Livestreaming tools and digital broadcasting platforms (e.g., OBS or similar software)
- Standard office and collaboration tools, including, but not limited to, Microsoft Office and Google Workspace
- Accessibility standards (ADA, Section 508) as applied to digital content
- Multimedia and design software, including, but not limited to, Adobe Creative Cloud (InDesign, Illustrator, Photoshop, Premiere Pro, Acrobat) and similar platforms

Ability to:

- Apply design principles to create visually effective materials across print, web, and multimedia platforms
- Prepare and adapt graphics, photography, and multimedia content for various formats and distribution channels
- Utilize industry-standard software to design, edit, and produce digital and print communications
- Perform basic troubleshooting related to multimedia production, web updates, and digital publishing tools
- Ensure accuracy through copyediting, proofreading, and attention to detail in all communications
- Support livestream production and multimedia event coverage using appropriate tools and equipment
- Design and produce high-quality multimedia content for a variety of audiences
- Manage multiple communication platforms and projects simultaneously
- Communicate clearly and effectively both orally and in writing
- Collaborate with staff across departments and school sites
- Work effectively under pressure and meet deadlines in a fast-paced environment
- Adapt to changing priorities and communication needs, including emergency situations
- Analyze engagement data and adjust communication strategies accordingly
- Maintain strong organizational and project management skills

MINIMUM QUALIFICATIONS

Education

- Bachelor's degree in Communications, Multimedia, Graphic Design, Journalism, Information Technology, or a related field

Experience

- Minimum of three (3) years of progressively responsible experience in web design, multimedia production, digital communications, or a related field
- Experience designing and managing websites, social media platforms, and digital content

PREFERRED QUALIFICATIONS

- Experience in a school district or public agency environment
- Experience with live streaming and event production
- Bilingual in Spanish (written and verbal) preferred
- Experience supporting crisis communication or public information efforts

LICENSES / CERTIFICATIONS

- Valid California Driver's License
- Proof of valid automobile insurance and insurability under District policy

WORKING CONDITIONS

- In-person, on-site position requiring regular presence at District offices and school sites
- Occasional evening and weekend work required for events and emergency communications
- Frequent interaction with staff, students, and community members

PHYSICAL REQUIREMENTS

- Ability to sit and work at a computer for extended periods
- Ability to operate multimedia and audio-visual equipment
- Ability to lift and carry equipment up to 25–35 pounds

EQUAL OPPORTUNITY EMPLOYER STATEMENT

Burbank Unified School District is committed to providing equal opportunity for all individuals in employment. The District does not discriminate on the basis of race, color, ancestry, national origin, immigration status, age, religion, marital status, pregnancy, physical or mental disability, medical condition, sex, sexual orientation, gender, gender identity, gender expression, genetic information, or association with a person or group with one or more of these actual or perceived characteristics.

June 1, 2026

SALARY RANGE ALLOCATIONS FOR CLASSIFIED BARGAINING UNIT MEMBERS

CLASSIFICATION	RANGE	BASIS
Accounting Series		
Project and Accounting Analyst	66	A
Account Analyst	60	A
Financial Analyst	60	A
Benefits Analyst	60	A
Lead Payroll Technician	51	A
Payroll Technician/ Benefits Assistant	49	A
Budget/Accounting Technician	48	A
Project Accounting Technician	48	A
Accounting Assistant IV	47	A
Payroll Technician	47	A
Employee Benefits Technician	47	A
Accounting Assistant III	45	A
Accounting Assistant II	42	A
Senior School Finance Technician	40	A, B, E
Accounting Assistant I	33	A
Clerical Series		
Use of Facilities Coordinator/ Senior Administrative Assistant	60	A
Assessment and Accountability Technician	56	A
Administrative Secretary II	56	A
Special Education Data Systems Technician	52	A
Human Resources Analyst - Certificated	50	A
Human Resources Analyst Classified	48	A
Facilities Operations and Construction Technician	48	A
District Attendance and Fundraising Technician	46	A
Budget/Program Technician	45	A
Special Education Technician	45	A
Administrative Secretary I	45	A
Food Service Operations Technician	44	A
Facilities Service Assistant	44	A
Guidance/Program Technician II	44	B,C
School Office Manager-High School	43	A
School Office Manager-Middle School	43	A
School Office Manager-Elementary	43	C
Clerical Series (continued)		
School Office Manager-Special Programs/Alternative Education	43	C
School Office Manager-Cont.	43	B, C
School Office Manager – Adult School	43	A
School Office Manager-Children's Center	43	A
School Office Manager-Alternative School	43	C
School Office Manager-Independent Learning Academy	43	C
Senior Attendance and Data Technician-Adult School	43	A
Human Resources Technician	43	A
Senior Secretary	42	A, B
Registrar	42	A
Office Technician-Adult Education	42	A
Construction & Operations Secretary	41	A
Guidance/Program Technician I	41	B, C
College/Career Center Technician	41	B, C
School Office Manager-Satellite School	40	C
Senior Attendance Technician	39	A,B
CTE Technician	38	B,C
Office Technician Continuation	37	C
Counseling Assistant	37	B
Secretary III	37	A,C,D
Office Assistant-Adult Education	37	C
Personnel Clerk	37	A
Office Assistant Elementary	36	C
Office Occupations – Adult Ed	36	D
Attendance Technician	35	C
Secretary II	35	A,C,D
Secretary I	33	A
Communications & Multimedia Specialist II	**60**	**A**
Food Service Series		
Food Service Utility Driver	42	A,C
Food Service Cook-Central Kitchen	41	D
Serving Kitchen Operator	40	D
Food Service Cook	38	A,D
Food Service Assistant	37	D
Barbecue Cook	37	D
Food Service Cashier-Elementary	37	D

CLASSIFICATION	RANGE	BASIS
Instructional Series		
Educational Interpreter II Deaf and Hard of Hearing	62	D
Educational Interpreter I- Deaf and Hard of Hearing	55	D
Paraeducator–Severe Behavioral II	47	D
Assistive Technology Technician	47	B
Paraeducator- Environmental Science Park	45	D
Educational Reader- Visually Impaired	45	D
Paraeducator-Severe Behavioral I	45	D
Behavior Intervention Assistant	45	D
Paraeducator-Severely Impaired	45	D
Paraeducator-Health Care	41	D
Paraeducator- At Risk Youth	39	D
Paraeducator -Children's Center II	39	D
Paraeducator- Deaf and Hard Of Hearing (DHH)	39	D
Paraeducator – Special Education	38	C,D
Paraeducator – English Language Learner	37	D
Paraeducator – Adult English Language Development	37	E
Paraeducator – Children's Center	37	A,C,D
Paraeducator – Primary Language Support	37	D
Instructional Resources Assistant	37	D
Paraeducator- Parent Education	36	E
Elementary Physical Education Assistant	36	D
Community Resource Assistant	37	D
Paraeducator	36	D
Volunteer Coordinator	36	D
Paraeducator – Adult Education/ Learning Center	36	E
Auxiliary Services		
Wellness and Behavior Specialist	60	D
Student Services and Attendance Specialist	57	A,C
Student Services and Attendance Specialist for Homeless and Foster Youth	57	A
Health Services Assistant-LVN/RN	56	D
Certified Occupational Therapy Assistant	53	C
Intervention Specialist for At-Risk Students	53	C,D
Speech-Language Pathology Assistant	53	D

CLASSIFICATION	RANGE	BASIS
Auxiliary Series (continued)		
Children's Center Health Technician	45	A
Library Coordinator	41	C
Health Services Assistant	41	D
Career Vocational Assistant	40	D
Adult School ELL/ Office Specialist III	39	A,B,E
Senior Textbook Coordinator	38	A
Adult ELL/Office Specialist II	37	A,E
Library Coordinator - Elementary	36	C,D
Campus Supervisor	36	A,D,E
District Office Receptionist	36	A
Adult School ELL/ Office Specialist I	35	E
ELD Office Specialist I	35	D
Adult School Learning Center Technician	35	E
Campus Supervisor - Elementary School	35	D
Purchasing Series		
Lead Buyer	60	A
Buyer	47	A
Purchasing Technician	45	A
Purchasing Clerk	40	A
Operations Series		
1- Grounds Group		
Grounds Leadperson	57 (62)	A
Irrigation Specialist	50	A
Integrated Pest Control/ Grounds Technician	48	A
Grounds Technician	43	A
2- Custodian Group		
Custodial Foreman	51	A
Swimming Pool Custodian	44	A
Lead Custodian	43	A
Senior Custodian/Campus Supervisor Monterey High School/CDS	39	A
School Safety/Utility Custodian	39	A,C
Custodian	38	A
Utility Custodian	38	A
Children's Center Service Worker	38	A
3-Warehouse Group		
Print Reproduction/Warehouse Worker	47	A
Reprographics Technician	46	A
Lead Warehouse Worker	42	A
Utility Driver	41	A
Warehouse Worker	41	A

CLASSIFICATION	RANGE	BASIS
Maintenance Series		
Facilities Services Leadperson	62	A
Maintenace Leadperson	62	A
Electrician	58	A
HVAC Mechanic	57	A
Plant Engineer	57	A
Low-Voltage Electrician	56	A
Plumber	55	A
Glazier/Carpenter	53	A
Vehicle & Equipment Mechanic	53	A
Locksmith	53	A
Senior Facilities Worker-Plaster/Cement	53	A
Carpenter	52	A
Painter	52	A
Sheet Metal Mechanic	52	A
Roof Repair Technician	52	A
Facilities Worker	46	A
Technology Series		
Lead Information Technology Systems Analyst	72	A
Network Analyst	67	A
Systems Analyst	67	A
Information Technology Systems Analyst	67	A
Lead Technology Support Specialist	61	A
Technology Support Specialist II	60	A
Student Information Systems Analyst	59	A
User Support Specialist	59	A
System Support Specialist	57	A
Adult School Technology Support Specialist II	57	B
Technology Support Specialist I	49	A
Instructional Media Specialist-Middle School	46	B,C
Instructional Technology Media Specialist -Elementary	42	A,C,D

Addendum: The probationary period for a promoted employee shall be six (6) months after the effective date of promotion.

BURBANK UNIFIED SCHOOL DISTRICT
Human Resources Services

REPORT TO THE BOARD

TO:	Members of the Board of Education
FROM:	Human Resources Services
PREPARED BY:	Lauren Trammell, Executive Assistant of Human Resources Services
SUBMITTED BY:	Lauren Trammell, Executive Assistant of Human Resources Services
DATE:	June 25, 2026
SUBJECT:	Approval of Job Description for Position Control Analyst (CSEA)

Background

The Position Control Analyst is a new classified position within the California School Employees Association (CSEA) bargaining unit. The position is designed to strengthen the District's fiscal oversight, internal controls, staffing accountability, and budget monitoring functions. As the District continues to implement recommendations associated with fiscal stabilization efforts, audit readiness initiatives, and improved business processes, the need for a dedicated position control function has become increasingly important.

Reporting to the Director of Fiscal Services, the Position Control Analyst serves as a critical link between Fiscal Services, Human Resources, and Payroll. The position is responsible for maintaining the District's position control system, ensuring staffing aligns with Board-authorized positions, available funding, and budgetary constraints. The position also supports the allocation and monitoring of salary and benefit costs across multiple funding sources, including the General Fund, bond funds, and state and federal categorical programs.

In addition, the Position Control Analyst supports compliance monitoring, audit preparation, corrective action plans, payroll system implementation efforts, staffing analyses, and ongoing budget development activities. The position will help strengthen internal controls, improve operational efficiency, support compliance with applicable laws and regulations, and ensure accurate fiscal reporting.

Approval of this job description establishes a clear framework for the responsibilities, qualifications, and expectations associated with this CSEA-represented position.

Discussion/Issues

The Position Control Analyst:

- Maintains and monitors the District's position control system to ensure alignment between authorized positions, funding sources, and budget allocations.
- Reviews and processes staffing actions to ensure positions are properly authorized, funded, and budgeted.
- Monitors salary and benefit expenditures across the General Fund, bond funds, and restricted categorical programs.

- Supports compliance with funding restrictions, including bond program requirements and federal and state grant regulations.
- Maintains documentation supporting split-funded positions, Personnel Activity Reports (PARs), and time-and-effort reporting requirements.
- Conducts internal reviews of staffing allocations, payroll distributions, funding assignments, and position control records.
- Supports corrective action plans, fiscal stabilization initiatives, internal audits, and external audit activities.
- Assists in budget development and ongoing budget monitoring through staffing analysis and financial reporting.
- Supports payroll system implementation, testing, validation, reporting, and process improvement efforts.
- Develops compliance tracking tools, audit-ready documentation, and reports supporting fiscal accountability and transparency.
- Provides technical assistance and training related to position control processes, funding compliance, and staffing documentation requirements.
- Collaborates with Fiscal Services, Human Resources, Payroll, and program departments to ensure accuracy and consistency of staffing and financial data.
- This position supports District priorities related to:
- Fiscal accountability and transparency.
- Implementation of FCMAT recommendations and fiscal stabilization efforts.
- Strengthened internal controls and audit readiness.
- Accurate position control and staffing management.
- Compliance with state, federal, and local funding requirements.
- Efficient allocation and monitoring of salary and benefit expenditures.
- Improved coordination between Fiscal Services, Human Resources, and Payroll.

Fiscal Impact

Approval of the job description itself has no fiscal impact. Any future action related to recruitment, hiring, or placement of the position will be brought forward separately for Board consideration through the District's budget development and staffing processes.

Recommendation

Human Resources Services recommends that the Board of Education approve the Job Description for Position Control Analyst (CSEA), effective June 26, 2026, as presented.

Burbank Unified School District

Position Control Analyst

Classification: Classified Hourly (Non-Exempt)
Salary: Range 60 ($69,600 – $89,184)
Work Year: 12 Months
Reports To: Director of Fiscal Services

BACKGROUND

Burbank Unified School District serves a diverse student population and is committed to fiscal responsibility, transparency, and effective resource allocation. The District maintains complex staffing and budget systems that require strong internal controls to ensure alignment between authorized positions, funding sources, and financial reporting requirements.

PURPOSE

Under the direction of the Director of Fiscal Services, the Position Control Analyst plans, organizes, and maintains the District's position control system to ensure that all staffing aligns with Board-authorized positions, funding availability, and budgetary constraints.

The position serves as a critical link between Fiscal Services, Human Resources, and Payroll to ensure accuracy and integrity of staffing data. This role provides detailed financial analysis related to staffing, supports compliance with applicable laws and regulations, and assists in the development and ongoing monitoring of the District's budget.

The Position Control Analyst supports the allocation and monitoring of salary and benefit costs across multiple funding sources, including general fund, bond funds, and state and federal categorical programs. The position ensures that all personnel-related financial transactions are properly coded, documented, and aligned with allowable uses of funds, maintaining audit-ready records and supporting compliant use of restricted funding sources. The position also serves as a key component of the District's internal control and fiscal accountability structure by supporting internal audits, compliance monitoring, staffing reviews, risk mitigation efforts, corrective action plans, and external audit activities. Through ongoing analysis and review of staffing, payroll, and funding allocations, the Position Control Analyst helps strengthen fiscal oversight, improve operational efficiency, and ensure compliance with applicable laws, regulations, and District policies.

ESSENTIAL FUNCTIONS/RESPONSIBILITIES

- Plan, organize, and maintain the District's position control system to ensure alignment between authorized positions, funding sources, and budget allocations
- Review and process requests to create, modify, or fill positions, ensuring positions are authorized and funding is available and appropriate to the funding source
- Establish and maintain position control records, including job classifications, FTE allocations, and funding sources, including split-funded positions across multiple programs

- Ensure all staffing actions are properly budgeted, coded, and aligned with applicable accounting standards, funding restrictions, and District procedures
- Conduct periodic internal reviews of position control, staffing allocations, payroll distributions, and funding source assignments to identify discrepancies, compliance concerns, and potential fiscal risks.
- Support District efforts related to corrective action plans, audit findings, and fiscal stabilization initiatives.
- Monitor staffing levels and labor costs across programs, departments, and funding sources, including general fund, bond, and restricted categorical funds
- Assist in the allocation and tracking of salary and benefit costs across multiple funding streams, ensuring expenditures align with allowable uses of each funding source
- Maintain and monitor documentation supporting split-funded positions, including time and effort reporting in accordance with Personnel Activity Report (PAR) requirements and applicable federal and state guidelines
- Support compliance with restrictions associated with bond funds, including ensuring that labor costs charged to bond programs align with eligible project scopes and allowable expenditures
- Review and reconcile position control data with payroll and financial systems, including verification of funding splits and coding accuracy across multiple funding sources
- Prepare and maintain reports related to staffing allocations, funding distributions, and financial impacts, including reports supporting restricted program compliance and audit review
- Develop and maintain internal compliance tracking tools, monitoring reports, and audit-ready documentation supporting fiscal accountability and transparency.
- Support the development and monitoring of the District's annual budget by providing position control data, historical analysis, projections, and funding allocation support
- Support the implementation, configuration, testing, and continuous improvement of payroll systems and related business processes. Assist in validating system functionality, payroll calculations, position control integration, data conversions, internal controls, and reporting accuracy to ensure compliance with applicable laws, regulations, collective bargaining agreements, and District policies while improving operational efficiency and data integrity.
- Assist in the preparation and organization of documentation required for internal and external audits related to salary and benefit expenditures, including those funded by bond, state, and federal sources
- Ensure compliance with federal, state, and local laws, regulations, and District policies related to staffing, fiscal controls, and use of restricted funds
- Maintain accurate and auditable records for all position control and staffing-related transactions, including documentation supporting funding allocations and compliance requirements
- Conduct and support internal reviews, compliance assessments, and audit activities across Business Services functions, including budgeting, accounting, payroll, position control, purchasing, accounts payable, accounts receivable, grants, categorical programs, bond programs, and other fiscal operations.

- Provide training and technical assistance to District staff regarding position control processes, budget coding, funding restrictions, and documentation requirements for split-funded positions
- Identify areas of risk or inconsistency in position control and funding allocations and recommend process improvements to strengthen internal controls and audit readiness
- Participate in cross-functional reviews involving Fiscal Services, Human Resources, Payroll, and program departments to ensure consistency and accuracy of staffing and financial data.
- Collaborate and work directly with Business Services, Human Resources and various program management and teams.
- Perform related duties as assigned

KNOWLEDGE, SKILLS, AND ABILITIES

Knowledge of:

- Principles and practices of governmental accounting, budgeting, and financial reporting
- Position control systems and processes within a public agency or school district
- Funding restrictions and allowable uses associated with general obligation bond funds, including voter-approved project limitations and restrictions on salary and administrative costs
- Federal, state, and local laws and regulations related to school finance, staffing, and compliance for restricted categorical and grant-funded programs
- Requirements for time and effort reporting, including Personnel Activity Reports (PAR), and audit standards related to salary and benefit allocations across multiple funding sources
- Principles of cost allocation methodologies for distributing salary and benefit expenditures across general fund, bond, and restricted funding sources
- Internal control principles and audit requirements, including documentation standards necessary to support compliance and audit review
- Local bond program requirements, including oversight, accountability, and reporting expectations for bond-funded expenditures
- Integrated payroll, human resources, and financial systems used in public education environments, including systems such as LACOE HRS/HCM or payroll platforms
- Time reporting and absence management systems (e.g., Frontline, ETAC, ADP or similar systems) and their role in supporting payroll accuracy and compliance with funding allocations
- Data validation, reconciliation, and reporting processes across HR, payroll, and financial systems to ensure accuracy and integrity of financial and staffing data

Ability to:

- Analyze complex financial and staffing data, including multi-funded and split-funded positions, and identify trends, discrepancies, and risks
- Interpret and apply laws, regulations, and policies related to fiscal operations, staffing, and funding restrictions across multiple funding sources

- Maintain accurate and detailed records supporting position control, funding allocations, and audit compliance, including documentation required for PARs and time and effort reporting
- Monitor and reconcile salary and benefit distributions across general fund, bond, and restricted funding sources to ensure expenditures are properly aligned and allowable
- Analyze and reconcile data across multiple systems, including position control, payroll, time reporting, and financial systems
- Ensure alignment between time reporting systems and payroll distributions, particularly for employees funded by multiple funding sources
- Identify and resolve discrepancies between HR, payroll, and financial system data to ensure accurate salary and benefit allocations
- Prepare clear, concise, and accurate financial, staffing, and compliance-related reports to support budget development, monitoring, and audit review
- Utilize enterprise systems and reporting tools to support position control monitoring, budget development, and audit preparation
- Communicate effectively with administrators, staff, and external stakeholders regarding fiscal processes, position control, and funding compliance requirements
- Establish and maintain effective working relationships across departments
- Manage multiple priorities and meet deadlines in a fast-paced environment
- Provide technical guidance and training related to position control processes, funding compliance, and documentation requirements for split-funded positions

MINIMUM QUALIFICATIONS

Education

- Bachelor's degree from an accredited college or university in Accounting, Finance, Business Administration, or a related field

Experience

- Minimum of three (3) years of progressively responsible experience in budgeting, accounting, or financial analysis
- Experience in a public agency or school district environment preferred
- Experience with position control systems and processes desirable

LICENSES / CERTIFICATIONS

- Valid California Driver's License

WORKING CONDITIONS

- On-site in-person office environment with extended periods of computer use
- Frequent interaction with District staff and administrators
- Subject to deadlines, interruptions, and competing priorities

PHYSICAL REQUIREMENTS

- Ability to sit for extended periods and operate a computer
- Ability to communicate effectively in person, by phone, and electronically
- Ability to review detailed financial documents and reports

EQUAL OPPORTUNITY EMPLOYER STATEMENT

Burbank Unified School District is committed to providing equal opportunity for all individuals in employment. The District does not discriminate on the basis of race, color, ancestry, national origin, immigration status, age, religion, marital status, pregnancy, physical or mental disability, medical condition, sex, sexual orientation, gender, gender identity, gender expression, genetic information, or association with a person or group with one or more of these actual or perceived characteristics.

June 1, 2026

SALARY RANGE ALLOCATIONS FOR CLASSIFIED BARGAINING UNIT MEMBERS

CLASSIFICATION	RANGE	BASIS
Accounting Series		
Project and Accounting Analyst	66	A
Account Analyst	60	A
Financial Analyst	60	A
Benefits Analyst	60	A
Lead Payroll Technician	51	A
Payroll Technician/ Benefits Assistant	49	A
Budget/Accounting Technician	48	A
Project Accounting Technician	48	A
Accounting Assistant IV	47	A
Payroll Technician	47	A
Employee Benefits Technician	47	A
Accounting Assistant III	45	A
Accounting Assistant II	42	A
Senior School Finance Technician	40	A, B, E
Accounting Assistant I	33	A
Position Control Analyst	**60**	**A**
Clerical Series		
Use of Facilities Coordinator/ Senior Administrative Assistant	60	A
Assessment and Accountability Technician	56	A
Administrative Secretary II	56	A
Special Education Data Systems Technician	52	A
Human Resources Analyst - Certificated	50	A
Human Resources Analyst Classified	48	A
Facilities Operations and Construction Technician	48	A
District Attendance and Fundraising Technician	46	A
Budget/Program Technician	45	A
Special Education Technician	45	A
Administrative Secretary I	45	A
Food Service Operations Technician	44	A
Facilities Service Assistant	44	A
Guidance/Program Technician II	44	B,C
School Office Manager- High School	43	A
School Office Manager- Middle School	43	A
School Office Manager- Elementary	43	C

CLASSIFICATION	RANGE	BASIS
Clerical Series (continued)		
School Office Manager-Special Programs/Alternative Education	43	C
School Office Manager-Cont.	43	B, C
School Office Manager – Adult School	43	A
School Office Manager- Children's Center	43	A
School Office Manager- Alternative School	43	C
School Office Manager- Independent Learning Academy	43	C
Senior Attendance and Data Technician-Adult School	43	A
Human Resources Technician	43	A
Senior Secretary	42	A, B
Registrar	42	A
Office Technician-Adult Education	42	A
Construction & Operations Secretary	41	A
Guidance/Program Technician I	41	B, C
College/Career Center Technician	41	B, C
School Office Manager- Satellite School	40	C
Senior Attendance Technician	39	A,B
CTE Technician	38	B,C
Office Technician Continuation	37	C
Counseling Assistant	37	B
Secretary III	37	A,C,D
Office Assistant- Adult Education	37	C
Personnel Clerk	37	A
Office Assistant Elementary	36	C
Office Occupations – Adult Ed	36	D
Attendance Technician	35	C
Secretary II	35	A,C,D
Secretary I	33	A
Food Service Series		
Food Service Utility Driver	42	A,C
Food Service Cook- Central Kitchen	41	D
Serving Kitchen Operator	40	D
Food Service Cook	38	A,D
Food Service Assistant	37	D
Barbecue Cook	37	D
Food Service Cashier-Elementary	37	D

CLASSIFICATION	RANGE	BASIS
Instructional Series		
Educational Interpreter II Deaf and Hard of Hearing	62	D
Educational Interpreter I- Deaf and Hard of Hearing	55	D
Paraeducator–Severe Behavioral II	47	D
Assistive Technology Technician	47	B
Paraeducator- Environmental Science Park	45	D
Educational Reader- Visually Impaired	45	D
Paraeducator-Severe Behavioral I	45	D
Behavior Intervention Assistant	45	D
Paraeducator-Severely Impaired	45	D
Paraeducator-Health Care	41	D
Paraeducator- At Risk Youth	39	D
Paraeducator -Children's Center II	39	D
Paraeducator- Deaf and Hard Of Hearing (DHH)	39	D
Paraeducator – Special Education	38	C,D
Paraeducator – English Language Learner	37	D
Paraeducator – Adult English Language Development	37	E
Paraeducator – Children's Center	37	A,C,D
Paraeducator – Primary Language Support	37	D
Instructional Resources Assistant	37	D
Paraeducator- Parent Education	36	E
Elementary Physical Education Assistant	36	D
Community Resource Assistant	37	D
Paraeducator	36	D
Volunteer Coordinator	36	D
Paraeducator – Adult Education/ Learning Center	36	E
Auxiliary Services		
Wellness and Behavior Specialist	60	D
Student Services and Attendance Specialist	57	A,C
Student Services and Attendance Specialist for Homeless and Foster Youth	57	A
Health Services Assistant-LVN/RN	56	D
Certified Occupational Therapy Assistant	53	C
Intervention Specialist for At-Risk Students	53	C,D
Speech-Language Pathology Assistant	53	D

CLASSIFICATION	RANGE	BASIS
Auxiliary Series (continued)		
Children's Center Health Technician	45	A
Library Coordinator	41	C
Health Services Assistant	41	D
Career Vocational Assistant	40	D
Adult School ELL/ Office Specialist III	39	A,B,E
Senior Textbook Coordinator	38	A
Adult ELL/Office Specialist II	37	A,E
Library Coordinator - Elementary	36	C,D
Campus Supervisor	36	A,D,E
District Office Receptionist	36	A
Adult School ELL/ Office Specialist I	35	E
ELD Office Specialist I	35	D
Adult School Learning Center Technician	35	E
Campus Supervisor - Elementary School	35	D
Purchasing Series		
Lead Buyer	60	A
Buyer	47	A
Purchasing Technician	45	A
Purchasing Clerk	40	A
Operations Series		
1- Grounds Group		
Grounds Leadperson	57 (62)	A
Irrigation Specialist	50	A
Integrated Pest Control/ Grounds Technician	48	A
Grounds Technician	43	A
2- Custodian Group		
Custodial Foreman	51	A
Swimming Pool Custodian	44	A
Lead Custodian	43	A
Senior Custodian/Campus Supervisor Monterey High School/CDS	39	A
School Safety/Utility Custodian	39	A,C
Custodian	38	A
Utility Custodian	38	A
Children's Center Service Worker	38	A
3-Warehouse Group		
Print Reproduction/Warehouse Worker	47	A
Reprographics Technician	46	A
Lead Warehouse Worker	42	A
Utility Driver	41	A
Warehouse Worker	41	A

CLASSIFICATION	RANGE	BASIS
Maintenance Series		
Facilities Services Leadperson	62	A
Maintenace Leadperson	62	A
Electrician	58	A
HVAC Mechanic	57	A
Plant Engineer	57	A
Low-Voltage Electrician	56	A
Plumber	55	A
Glazier/Carpenter	53	A
Vehicle & Equipment Mechanic	53	A
Locksmith	53	A
Senior Facilities Worker-Plaster/Cement	53	A
Carpenter	52	A
Painter	52	A
Sheet Metal Mechanic	52	A
Roof Repair Technician	52	A
Facilities Worker	46	A
Technology Series		
Lead Information Technology Systems Analyst	72	A
Network Analyst	67	A
Systems Analyst	67	A
Information Technology Systems Analyst	67	A
Lead Technology Support Specialist	61	A
Technology Support Specialist II	60	A
Student Information Systems Analyst	59	A
User Support Specialist	59	A
System Support Specialist	57	A
Adult School Technology Support Specialist II	57	B
Technology Support Specialist I	49	A
Instructional Media Specialist-Middle School	46	B,C
Instructional Technology Media Specialist -Elementary	42	A,C,D

Addendum: The probationary period for a promoted employee shall be six (6) months after the effective date of promotion.

Burbank Unified School District
Business Services

REPORT TO THE BOARD

TO:	Members of the Board of Education
FROM:	Jason Hasty, Assistant Superintendent of Business Services
PREPARED BY:	Jason Hasty, Assistant Superintendent of Business Services
SUBMITTED BY:	Lauren Trammell, Executive Assistant of Human Resources Services
DATE:	June 25, 2026
SUBJECT:	Approval of New Classified Management Position - Director of Bond Projects

---

Background:

Burbank Unified School District maintains an active general obligation bond program under Measure ABC, supporting the construction, modernization, and improvement of school facilities. The District is required to ensure strong oversight, fiscal stewardship, accountability, and compliance with applicable laws and regulations governing bond-funded projects.

At the June 4, 2026 Board meeting, the Board received an informational presentation regarding facilities and bond program consulting services to support implementation of Measure ABC. The presentation identified the need for additional program capacity in facilities planning, project development, procurement, construction administration, stakeholder communications, reporting, and related bond program services.

As the bond program expands in scope and complexity, the District must ensure dedicated District-level leadership to coordinate project delivery, maintain alignment with the District's Facility Master Plan, monitor schedules and budgets, and support transparent communication with the Board, Citizens' Bond Oversight Committee, school sites, and community stakeholders.

The proposed Director of Bond Projects position is designed to establish a single point of accountability for the management and coordination of bond-funded construction, modernization, and facilities planning efforts while supporting successful implementation of the District's Measure ABC bond program.

Discussion/Issues:

The District currently lacks a dedicated classified management position responsible for the day-to-day District-level oversight and coordination of the bond program and related capital improvement projects. Without a dedicated position, the District may experience increased risk in the following areas:

- Fragmented oversight of project planning, procurement, construction, and closeout
- Limited centralized ownership of project schedules, budgets, documentation, and stakeholder coordination
- Increased risk of delays, cost escalation, scope changes, and inconsistent communication

- Strain on existing staff to support both ongoing facilities operations and implementation of Measure ABC projects

The Director of Bond Projects will serve a clearly defined role:

1. **District-Level Lead for Bond Project Management**

This position will be responsible for the project management side of the bond program, including:

- Planning, organizing, and directing bond-funded construction, modernization, and major facilities projects
- Coordinating project planning, design, procurement, bidding, construction, and closeout activities
- Serving as a liaison among architects, engineers, construction managers, inspectors, contractors, consultants, regulatory agencies, District departments, and school sites
- Monitoring project timelines, budgets, change orders, expenditures, and construction progress
- Supporting alignment with the District's Facility Master Plan, project priorities, and long-term capital improvement strategies

2. **Support for Accountability, Reporting, and Program Coordination**

In addition, this position will support District leadership by:

- Preparing reports, presentations, and updates for the Board of Education and Citizens' Bond Oversight Committee
- Providing clear communication regarding project status, schedules, impacts, and implementation progress
- Identifying risks and recommending mitigation strategies to minimize cost overruns and delays
- Coordinating with Fiscal Services to support accurate financial tracking and reporting
- Ensuring proper project documentation, regulatory compliance, and closeout processes

This role is essential to providing ongoing coordination, accountability, and continuity for bond-funded projects while supporting responsible stewardship of Measure ABC funds and successful delivery of capital improvements for Burbank Unified School District students, staff, and the community.

Fiscal Impact:

The Director of Bond Projects is a Classified Management (Exempt) position, 12 months, Salary Schedule B, Range AA ($125,746 - $168,505 annually), plus statutory benefits.

This position will be funded by Measure ABC Bond Funds (21.0-00000.0-00000-85000-2311-7520000).

Recommendation:

Jason Hasty, Assistant Superintendent of Business Services, recommends that the Board of Education approve the establishment of the Director of Bond Projects position, a Classified Management position on Salary Schedule B, Range AA, funded by Measure ABC to support successful implementation of the District’s bond program, effective July 1, 2026, as presented.

Burbank Unified School District

Director of Bond Projects

Classification: Classified Management (Exempt)
Salary: Schedule B, Range AA ($125,746-$168,505)
Work Year: 12 Months
Reports To: Assistant Superintendent, Business Services

BACKGROUND

Burbank Unified School District serves a diverse student population across multiple school sites and programs and is committed to providing high-quality educational environments that support student achievement and community engagement. The District maintains an active capital facilities program supported by general obligation bonds and other funding sources to modernize, construct, and maintain safe and effective learning environments.

PURPOSE

Under the direction of the Assistant Superintendent of Business Services and in collaboration with the Director of Facilities, the Director of Bond Projects organizes, directs, and oversees the District's bond-funded construction, modernization, and facilities planning efforts.

The position is responsible for the full lifecycle of capital projects, including planning, design, procurement, construction, and closeout, ensuring projects are delivered on time, within budget, and in compliance with all applicable laws and regulations. The Director serves as a key advisor to District leadership and the Board of Education on facilities planning, bond program implementation, and long-term capital improvement strategies.

This role reflects the comprehensive oversight model seen in comparable districts, including responsibility for coordinating architects, contractors, regulatory agencies, and internal stakeholders across all phases of construction projects.

ESSENTIAL FUNCTIONS / RESPONSIBILITIES

- Plan, organize, and direct the District's bond program and capital construction projects, including new construction, modernization, and major repairs
- Develop and implement long-range facilities plans, including alignment to the District's Facilities Master Plan
- Establish project priorities, timelines, and funding strategies
- Oversee all phases of construction projects including planning, design, bidding, construction, and closeout
- Coordinate the work of architects, engineers, construction managers, inspectors, and consultants
- Review plans, specifications, and designs for accuracy, compliance, and alignment with District standards

- Ensure projects comply with DSA requirements, building codes, ADA, and all applicable regulations
- Develop, monitor, and manage project and program budgets
- Review and approve project expenditures, invoices, and change orders
- Coordinate with Fiscal Services to ensure accurate financial tracking and reporting
- Analyze cost estimates and recommend adjustments to maintain fiscal integrity
- Oversee preparation of bid documents, specifications, and Requests for Proposals (RFPs)
- Coordinate public bidding processes in compliance with Public Contract Code and District policies
- Evaluate bids and recommend contract awards
- Administer contracts and monitor contractor performance
- Monitor construction progress to ensure adherence to plans, specifications, schedules, and budgets
- Conduct site visits and inspections to verify quality and compliance
- Resolve construction issues, conflicts, and delays in a timely manner
- Ensure proper project closeout, including documentation and certification
- Prepare reports, presentations, and updates for the Board of Education and Bond Oversight Committee
- Represent the District in meetings with community groups, regulatory agencies, and stakeholders
- Provide clear communication regarding project status, timelines, and impacts
- Collaborate with District departments, school sites, and external agencies to ensure project alignment with educational needs
- Facilitate meetings and coordinate communication between stakeholders
- Support site administrators in planning for facility improvements
- Identify risks and develop mitigation strategies to minimize cost overruns and delays
- Evaluate change orders and assess impacts on scope, schedule, and budget
- Ensure safe working conditions and compliance with applicable safety standards
- Perform related duties as assigned

KNOWLEDGE, SKILLS, AND ABILITIES

Knowledge of:

- California Public Contract Code, DSA requirements, Title 24, ADA, and applicable building codes
- Principles and practices of public sector construction management and facilities planning
- Budget development, cost control, and financial management for capital programs
- Contract administration, procurement processes, and competitive bidding requirements
- Applicable state and federal laws governing school facilities and capital projects

Ability to:

- Plan, organize, and direct complex capital construction and facilities programs
- Provide strategic leadership and recommendations to executive staff and the Board of Education

- Analyze technical documents, plans, specifications, and financial data
- Manage multiple large-scale projects simultaneously within strict timelines and budgets
- Communicate effectively with diverse stakeholders, including board members, staff, contractors, and the public
- Identify risks, resolve complex issues, and implement effective solutions

MINIMUM QUALIFICATIONS

Education

- Bachelor's degree in Construction Management, Architecture, Engineering, Facilities Management, or a related field

Experience

- Minimum of five (5) years of progressively responsible experience in construction project management, facilities planning, or capital program management
- Experience managing large-scale public works or school construction projects

PREFERRED QUALIFICATIONS

- Master's degree in a related field
- Experience in a K–12 school district or public agency
- Experience managing bond-funded construction programs
- Knowledge of CEQA, LEED, and sustainable design practices

LICENSES / CERTIFICATIONS

- Valid California Driver's License
- Proof of valid automobile insurance and insurability under District policy

WORKING CONDITIONS

- In-person, on-site position requiring regular presence at District offices, school sites, and construction locations
- Exposure to active construction environments, including noise, dust, and moving equipment
- Occasional evening and weekend work required

PHYSICAL REQUIREMENTS

- Ability to sit, stand, and walk for extended periods
- Ability to inspect construction sites, including climbing ladders and navigating uneven terrain
- Ability to lift and carry materials up to 50 pounds
- Ability to operate a motor vehicle and drive between District sites

BURBANK UNIFIED SCHOOL DISTRICT

EQUAL OPPORTUNITY EMPLOYER STATEMENT

Burbank Unified School District is committed to providing equal opportunity for all individuals in employment. The District does not discriminate on the basis of race, color, ancestry, national origin, immigration status, age, religion, marital status, pregnancy, physical or mental disability, medical condition, sex, sexual orientation, gender, gender identity, gender expression, genetic information, or association with a person or group with one or more of these actual or perceived characteristics.

The District complies with all applicable state and federal laws, including Title VII, Title IX, Section 504 of the Rehabilitation Act, the Americans with Disabilities Act (ADA), and the California Fair Employment and Housing Act (FEHA). Reasonable accommodations will be provided to qualified individuals with disabilities in accordance with applicable law. Inquiries regarding nondiscrimination policies should be directed to the District's Human Resources Department.

CLASSIFIED SUPERVISORS AND MANAGERS
SCHEDULE B
Effective July 1, 2024

RANGE		STEP 1	STEP 2	STEP 3	STEP 4	STEP 5	STEP 6	STEP 7
A	Director, Fiscal Services	132,028	138,634	145,561	152,841	160,483	168,507	176,932
AA	Director of Information Technology and Education Support Director, Facilities **Director of Bond Projects**	125,746	132,028	138,634	145,561	152,841	160,483	168,505
B	Assistant Director, Information Technology Director, Food Services Director, Purchasing, Warehouse, & Reprographics Project Manager Supervisor, Budget and Finance Supervisor, Human Resources Supervisor, Payroll Assistant Director of Nutritional Services Fiscal Compliance Supervisor Public Information Officer (PIO)	107,014	112,364	117,979	123,880	130,073	136,577	143,406
C	Manager, Technology Services Manager, Trades Manager Occupational Therapist Chef Manager Nutritionist	99,475	104,449	109,672	115,153	120,909	126,957	133,304
D	No Position in this Classification	97,870	102,767	107,900	113,299	118,960	124,911	131,155
E	Supervisor, Custodial Grounds Operations	92,484	97,107	101,964	107,061	112,414	118,034	123,935
F	Assistant Supervisor of Budget and Finance Lead Educational Sign Language Supervisor	90,179	94,686	99,418	104,391	109,612	115,089	120,843
G	No Position in this Classification	76,171	79,980	83,979	88,177	92,584	97,217	102,077

CLASSIFIED SUPERVISORS AND MANAGERS
SCHEDULE B
Effective July 1, 2024

CLASSIFIED SUPERVISORS AND MANAGERS
SCHEDULE B
Effective July 1, 2024

RANGE		STEP 1	STEP 2	STEP 3	STEP 4	STEP 5	STEP 6	STEP 7
H	Coordinator, Emergency Planning and Safety Coordinator, Food Services Operations Manager, Reprographics/District Warehouse Supervisor, Food Services Field Supervisor, Purchasing Supervisor, Grounds	73,390	77,059	80,913	84,957	89,207	93,662	98,348
I	Behavior Interventionist Supervisor, Custodial	67,638	71,021	74,572	78,301	82,216	86,328	90,642
J	No Position in this Classification	65,234	68,494	71,919	75,515	79,292	83,257	87,421
K	Print Center Supervisor	59,683	62,666	65,799	69,088	72,541	76,168	79,978
L	No Position in this Classification	53,782	56,471	59,294	62,257	65,371	68,640	72,071
M	No Position in this Classification	52,054	54,657	57,393	60,260	63,269	66,434	69,755
N	No Position in this Classification	51,940	54,536	57,262	60,134	63,129	66,288	69,601
O	No Position in this Classification	50,207	52,717	55,355	58,117	61,025	64,075	67,279

CLASSIFIED SUPERVISORS AND MANAGERS
SCHEDULE B
Effective July 1, 2024

RANGE		STEP 1	STEP 2	STEP 3	STEP 4	STEP 5	STEP 6	STEP 7
P	No Position in this Classification	49,640	52,119	54,728	57,461	60,338	63,354	66,521
Q	No Position in this Classification	48,505	50,932	53,482	56,154	58,957	61,906	65,003
R	Supervisor III, Food Service	46,865	49,206	51,669	54,249	56,962	59,811	62,801
S	Supervisor II, Food Service	42,186	44,295	46,510	48,833	51,275	53,839	56,531
T	No position in this classification	42,155	44,263	46,474	48,799	51,239	53,801	56,490

***All salaries listed are for 12-month employees and will be prorated for employees who do not work 12 months.

Adopted: 4/3/86

Revised: 12/06/90; 05/02/91; 02/20/92; 10/01/92; 09/19/93; 10/07/93; 04/07/94; 08/04/94; 11/17/94; 05/04/95; 07/06/95; 09/21/95; 01/18/96; 04/18/96; 08/02/96; 09/05/96; 01/16/97; 10/16/97; 02/19/98; 06/25/98; 02/04/99; 02/18/99; 06/24/99; 08/05/99; 08/19/99; 10/21/99; 11/04/99; 05/18/00; 08/17/00; 10/04/01; 02/21/02; 02/20/03; 03/18/04; 06/24/04; 08/05/04, 07/07/05;4/20/06, 06/04/07, 3/20/08,12/16/10; 4/7/11, 4/21/11, 11/03/11, 12/15/11, 2/16/12, 3/15/12, 3/20/14; 6/19/14; 11/6/14; 02/19/15, 6/4/15,6/18/15, 7/16/15, 3/3/16, 10/20/16, 11/3/16, 3/15/18 10/18/2018; 3/7/19;9/2/21;5/5/22;9/15/22; 3/2/23, 7/20/23, 8/03/23, 09/21/23, 02/01/24***;*** 05/16/24; 07/25/24; 12/12/24; 1/15/2026; **6/4/26**

BURBANK UNIFIED SCHOOL DISTRICT
Human Resources Services

REPORT TO THE BOARD

TO:	Members of the Board of Education
FROM:	Human Resources Services
PREPARED BY:	Lauren Trammell, Executive Assistant of Human Resources Services
SUBMITTED BY:	Lauren Trammell, Executive Assistant of Human Resources Services
DATE:	June 25, 2026
SUBJECT:	Approval of Job Description for Assistant Superintendent of Special Education and Student Support Services

---

Background

The Assistant Superintendent of Special Education and Student Support Services is a critical cabinet-level position responsible for providing districtwide leadership and oversight of special education programs and a broad range of student support services, including mental health, counseling, health and wellness, Section 504 plans, restorative practices, and alternatives to suspension.

The attached job description reflects the evolving scope and complexity of student needs and aligns with current federal and state requirements, including IDEA, California Education Code, SELPA directives, and Local Control Accountability Plan (LCAP) priorities. The position ensures that students with disabilities and student receiving support service make meaningful progress, while also maintaining compliance, fiscal oversight, and program quality.

Approval of this job description establishes a clear framework for leadership responsibilities, accountability, and expectations as the district continues to strengthen student supports, mental health services, and inclusive practices.

Discussion/Issues

The Assistant Superintendent of Special Education and Student Support Services:

- Provides leadership and oversight of all Special Education and Student Support Services programs
- Ensures compliance with federal, state, and local laws and regulations
- Oversees IEP, Section 504, assessment, placement, and due process activities
- Supervises and evaluates Special Education and Student Support Services personnel
- Develops and manages departmental budgets and expenditures
- Serves as the district representative in SELPA and due process matters
- Collaborates with site administrators, families and community agencies
- Provides regular updates to the Board of Education and serves on the on the Executive Cabinet

This position supports district priorities related to:

- Student safety, wellness, and belongings

- Inclusive and equitable educational practices
- Compliance and accountability in Special Education
- Strengthened mental health and student support systems
- LCAP goals and community engagement

Fiscal Impact
Approval of the job description itself has no fiscal impact. Any future action related to recruitment or appointment would be brought forward separately for Board consideration.

Recommendation
Human Resources Services recommends that the Board of Education approve the Job Description for Assistant Superintendent of Special Education and Student Support Services, effective June 26, 2026, as presented.

Burbank Unified School District

Assistant Superintendent Special Education & Student Support Services

Classification: Assistant Superintendent (Certificated Management)
Salary: TBD
Work Year: 12 Months (220 Workdays)
Reports To: Superintendent

PURPOSE

The Assistant Superintendent of Special Education and Student Support Services, under the direction of the Superintendent, provides leadership and oversight for the District's special education programs and a broad range of student support services, including mental health, health and wellness, counseling, 504 plans, and restorative interventions including, but not limited to: other means of correction and alternatives to suspension

ESSENTIAL DUTIES AND RESPONSIBILITIES

- Provides oversight and support to ensure students with disabilities make meaningful progress toward California Standards, as measured by the California Assessment of Student Performance and Progress (CASPP) and the California Alternative Assessment (CAA).
- Provides leadership, support, and oversight of the District's Special Education programs and Student Support Services programs; maintains appropriate program quality. Ensures compliance with federal, state, and local laws, regulations, and reporting requirements.
- Supervises the assignment, supervision, and evaluation of Special Education and Student Support Services personnel.
- Oversees the referral, assessment, eligibility, placement, programming, and evaluation processes for students with disabilities and exceptional needs, including Section 504 accommodation plans; reviews and approves all Student Support Services placements and recommendations for non-public school placements
- Develops and administers the Special Education and Student Support Services budget, ensuring that all services meet the District's budgetary and contractual guidelines and that appropriate billings are completed for additional services; monitors and approves expenditures, ensuring sound fiscal management of special education and student support services programs.
- Represents the District in matters related to the Special Education program; serves as district representative for due process hearings, SELPA, and other venues as appropriate
- Interprets and administers state and SELPA regulations and directives; conducts training for district staff on Special Education and Student Support Services laws, regulations, compliance requirements, district procedures, and instructional practices.
- Coordinates the District's special education and student support services programs with external organizations and agencies, negotiates interagency agreements, and serves as a liaison between schools and community service agencies to foster collaborative relationships.
- Collaborates with site leadership to serve as Special Education and Student Support Services consultant and resource to site administrators.

- Provides input for Special Education curriculum revisions and course development.
- Establishes and supports the Special Education Community Advisory Committee in accordance with state regulations and requirements.
- Establishes and supports the District's Mental Health and Wellness Committee
- Keeps administrators and the district informed of available federal, state, and local resources for Special Education and Student Support Services.
- Develops, reviews, and recommends the adoption or revision of board policies and regulations pertaining to Special Education and Student Support Services.
- Oversees inter and intra-district transfers and expulsion recommendations
- Provides oversight and support for community input on the District's Special Education, mental health programs, health and wellness services, and counseling services in support of the annual update to the Local Control Accountability Plan.
- Provides regular updates to the Board of Education and the community on Special Education and Student Support Services programs.
- Serves as a member of the District's Executive Cabinet
- Performs other duties as assigned

KNOWLEDGE AND ABILITIES

- Comprehensive knowledge of IDEA, California Education Code, and applicable federal and state regulations governing special education and student support services.
- Deep understanding of the IEP process, due process procedures, and SELPA operations.
- Knowledge of mental health frameworks, restorative practice, and multi-tiered systems of support.
- Ability to analyze complex data and translate findings into clear recommendations for staff, families, executive cabinet, and board members.
- Skill in building trust across diverse stakeholder groups, including families, site administrators, labor partners, and community agencies.
- Capacity to lead and develop a team while managing multiple high-stakes priorities.
- Ability to maintain composure and sound judgment in sensitive and high-pressure situations.

REQUIREMENTS WORK YEAR

- Certificated Management Work Year; 220 days

MINIMUM QUALIFICATIONS

Credential

- Current valid Teaching or Pupil Personnel Services Credential and Current Administrative Credential

Education

- Master's degree in education or related field from an accredited college or university; Doctorate degree in education or related field (preferred)

Experience

- Five years successful experience as a certificated teacher or school counselor or school psychologist or school social worker;

- Successful experience as a school administrator;
- Background supervising Special Education and/or Student Support Services (preferred)
- Successful experience as a school site principal (preferred);
- Extensive experience working with diverse student populations (preferred);
- Extensive experience with the IEP process (preferred);
- Experience providing Professional Learning (preferred);
- Experience with Special Education Due Process (preferred);
- Experience with laws and regulations pertaining to suspension, expulsion, alternative placement, other means of correction, and restorative interventions (preferred)

EQUAL OPPORTUNITY EMPLOYER STATEMENT

Burbank Unified School District is committed to providing equal opportunity for all individuals in employment. The District does not discriminate on the basis of race, color, ancestry, national origin, immigration status, age, religion, marital status, pregnancy, physical or mental disability, medical condition, sex, sexual orientation, gender, gender identity, gender expression, genetic information, or association with a person or group with one or more of these actual or perceived characteristics.

The District complies with all applicable state and federal laws, including Title VII, Title IX, Section 504 of the Rehabilitation Act, the Americans with Disabilities Act (ADA), and the California Fair Employment and Housing Act (FEHA). Reasonable accommodations will be provided to qualified individuals with disabilities in accordance with applicable law.

BURBANK UNIFIED SCHOOL DISTRICT
SALARY SCHEDULE FOR CERTIFICATED ASSISTANT SUPERINTENDENTS
SCHEDULE D
Effective July 1, 2024

RANGE		DAYS	STEP 1	STEP 2	STEP 3	STEP 4
A	Assistant Superintendent of Educational Services Assistant Superintendent of Human Resources Assistant Superintendent of Instructional Services **Assistant Superintendent of Special Education & Student Support Services**	220	201,840	211,931	222,528	233,655

Adopted: 7/20/23
Revised: 02/01/24
Revised; 5/16/24
Revised: 6/25/26

Burbank Unified School District
Administrative Services

REPORT TO THE BOARD

TO:	Members of the Board of Education
FROM:	Jason Hasty, Assistant Superintendent, Administrative Services
PREPARED BY:	Maricela Salinas, Director of Fiscal Services
SUBMITTED BY:	Cheretta Wade, Administrative Secretary II
DATE:	June 25, 2026
SUBJECT:	Approval of the 2026-2027 Budget

Background:

The Burbank Unified School District must prepare an annual budget for the fiscal year July 1 through June 30 which must be reviewed and approved and submitted to LA County Office of Education on or before July 1 of the fiscal year (LACOE has always asked for it by June 30). This budget is based upon assumptions regarding projected enrollment and state and federal funding among other factors. Once adopted by the Board of Education, the adopted budget is submitted to the County Office of Education for review and approval before forwarding to the State Department of Education.

Discussion/Issues:

The Board of Education will conducted a public hearing on the 2026-2027 Budget of the District for the year ending June 30, 2027. Final Adoption will be on June 25, 2026 as required by Education Code Section 42103 and 52062.

Fiscal Impact:

There is no fiscal impact in adopting the budget. However, not having a budget adopted by the statutory time lines would lead to the County withholding funding until it is received, including payroll.

Recommendation:

Jason Hasty, Assistant Superintendent, Administrative Services, recommends that the Board of Education adopt the 2026-2027 budget, as presented.

Burbank Unified School District
25-26 Estimated Actuals
26-27 Budget Adoption

Prepared by Maricela Salinas, Director of Fiscal

Dr. Jason Hasty, Assistant Superintendent, Business Services

June 18, 2026

Where are we now?

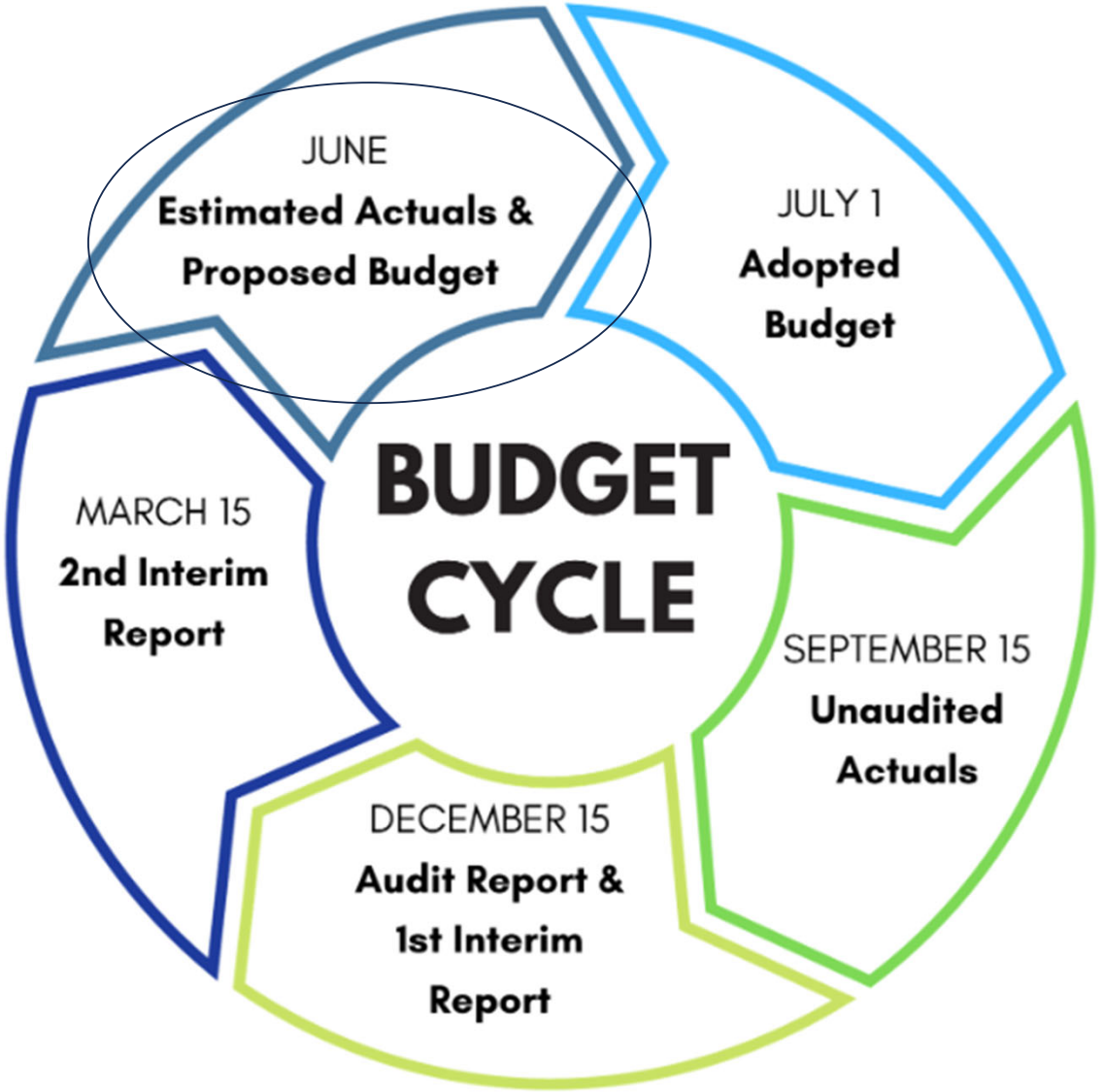

Certification

The budget is presented at the required public hearing on June 18, 2026, with adoption scheduled for June 25, 2026.

The 2026-27 Adopted Budget is certified by the Governing Board on Form CB and submitted to the Los Angeles County Office of Education for review and approval.

The County Office of Education reviews the Adopted Budget and approves, conditionally approves, or disapproves it.

Assumptions

Revenue Assumptions

- LCFF revenue reflects the Governor's May Revision and 4.31% combined LCFF (including 1.44% augmentation).
- Continued enrollment and ADA stabilization efforts - 1.2% decline over last 5 years
- Federal and state categorical revenues budgeted based on currently approved allocations.
- One-time revenues are excluded from ongoing budget planning assumptions.
- Local revenues remain generally stable.

Expenditure Assumptions

- Step-and-column movement - 1.5% annual increase
- Pension rates stable to declining (STRS 19.10%, PERS 26.4%); H&W capped at $16,750/FTE; ongoing increases in utilities and operational costs..
- Non-recurring legal and capital-related expenditures from 2025-26 are not assumed to continue.
- Continued alignment of staffing and program expenditures with student enrollment and fiscal priorities.

26-27 Budget Key Budget Outlook

26-27 Budget

- General Fund revenues projected at **$231.9 million**, an increase of **$10.5 million (4.8%)** over Estimated Actuals.
- General Fund expenditures projected at **$230.8 million**, an increase of **$1.5 million (0.6%)**.
- Combined General Fund budget remains near break-even with a projected net decrease in fund balance of **$643,559**.
- Unrestricted General Fund continues to experience structural deficit spending of approximately **$3.8 million**.
- Ending combined fund balance projected at **$38.0 million**, maintaining required reserve levels.

Bottom Line: The 2026-27 Adopted Budget reflects improved revenue assumptions from the May Revision, expenditure controls, and continued progress toward long-term fiscal stability while maintaining required reserves.

General Fund (Combined)	2025-26 EA	2026-27 BA	$ Change	%
Total Revenues	$221,336,116	$231,861,685	$10,525,569	4.8%
Total Expenditures	$229,284,528	$230,755,244	$1,470,716	0.6%
Excess (Deficiency) before Other Uses	**($7,948,412)**	**$1,106,441**	**$9,054,853**	
Transfers Out	($2,000,000)	($1,750,000)	$250,000	-12.5%
Net Increase (Decrease) in Fund Balance	**($9,948,412)**	**($643,559)**	**$9,304,853**	
Beginning Fund Balance	$48,586,013	$38,637,601		
Ending Fund Balance	**$38,637,601**	**$37,994,042**	**($643,559)**	**-1.7%**

General Fund Combined EA vs BA

2026-27 Adopted Budget	Unrestricted	Restricted	Combined
Total Revenues	$183,284,053	$48,577,632	$231,861,685
Total Expenditures	$144,175,130	$86,580,113	$230,755,244
Transfers Out	($1,750,000)	$0	($1,750,000)
Contributions (net)	($41,109,278)	$41,109,278	$0
Net Increase (Decrease)	($3,750,355)	$3,106,797	($643,559)

Unrestricted vs. Restricted

Revenues

Revenue Source	2025-26 EA	2026-27 BA	$ Change	%
LCFF Sources (8010-8099)	$171,000,278	$176,169,439	$5,169,161	3.0%
Federal Revenue (8100-8299)	$8,175,655	$8,635,483	$459,828	5.6%
Other State Revenue (8300-8599)	$33,906,558	$39,090,683	$5,184,125	15.3%
Other Local Revenue (8600-8799)	$8,253,625	$7,966,080	($287,545)	-3.5%
Total Revenues	$221,336,116	$231,861,685	$10,525,569	4.8%

Revenue Driver
ADA and UPP

Students	2025-26 EA	2026-27 BA
Funded ADA (3-year average)	13,440.58	13,316.76
Current-year ADA (P-2)	13,063.63	12,908.00
Unduplicated Pupil % (UPP)	38.49%	39.38%

*Source: LCFF Calculator

Expenditures

Expenditures by Object (Combined Fund 01)	2025-26 EA	2026-27 BA	$ Change	%
Certificated Salaries (1000)	$84,082,646	$86,344,415	$2,261,769	2.7%
Classified Salaries (2000)	$39,332,924	$39,797,773	$464,849	1.2%
Employee Benefits (3000)	$51,250,077	$52,116,438	$866,361	1.7%
Books and Supplies (4000)	$6,467,317	$8,010,822	$1,543,505	23.9%
Services and Other Operating (5000)	$44,372,124	$43,925,323	($446,801)	-1.0%
Capital Outlay (6000)	$1,602,158	$81,000	($1,521,158)	-94.9%
Other Outgo (7100-7299, 7400-7499)	$2,939,713	$1,567,236	($1,372,477)	-46.7%
Transfers of Indirect Costs (7300)	($762,431)	($1,087,763)	($325,332)	42.7%
Total Expenditures	**$229,284,528**	**$230,755,244**	**$1,470,716**	**0.6%**

Description	2025-26 Estimated Actuals	2026-27 Adopted Budget	Change
Total Contribution to Restricted Programs	$45.6 Million	$41.1 Million	**($4.5 Million)**
Special Education	~$41.1 Million	~$37.1 Million	**($4.0 Million)**
Routine Restricted Maintenance (RRM)	$7.0 Million	$7.0 Million	No Significant Change
Redevelopment Pass-Through Offset	($2.3 Million)	($2.9 Million)	600,0000
Net Change in Contributions	—	—	**(9.9%) Decrease**

Unrestricted General Fund **Contributions** to Restricted Programs

Metric	2026-27 Budget
Reserve for Economic Uncertainties	$6,975,160
State Minimum Requirement	3.00%
District Reserve Policy	6.00%
Total Available Reserves (Assigned + Reserve)	$16,021,272
Total Available Reserve Percentage	6.9%

Reserve

Total Available Reserves (Fund 01)	2026-27	2027-28	2028-29
1) Assigned Fund Balance	$9,046,112	$4,603,315	$28,834
2) Unassigned Fund Balance (incl. REU)	$6,975,160	$7,060,020	$7,163,357
3) Total Assigned and Unassigned (1 + 2)	$16,021,272	$11,663,335	$7,192,191
4) Minimum Recommended REU	$6,975,160	$7,060,020	$7,163,357
5) Amount Exceeding Minimum REU (3 - 4)	$9,046,112	$4,603,315	$28,834
Total Available as % of Expenditures and Other Uses	**6.9%**	**5.0%**	**3.0%**

Reserves: MYP

	Staffing Ratio		
	Salaries and Benefits	Total Expenditures	of Unrestricted Salaries and Benefits
Fiscal Year	(Form 01, Objects 1000-3999)	(Form 01, Objects 1000-7499)	to Total Unrestricted Expenditures
Third Prior Year (2023-24)	120,788,084.90	135,428,913.87	89.2%
Second Prior Year (2024-25)	117,202,661.34	136,363,657.81	85.3%
First Prior Year (2025-26)	123,761,366.00	145,116,149.58	**85.3%**
		Historical Average Ratio:	86.8%

General Fund Staffing Ratio

Fiscal Stabilization Plan: Targets



Year	Total Impact
2026-27	$2.0M
2027-28	$9.0M
2028-29	$9.5M

Unrestricted General Fund	2026-27	2027-28	2028-29
Beginning fund balance	$19,816,627	$17,566,272	$19,958,335
Operating deficit, before plan	($3,750,355)	($4,357,937)	($4,471,144)
Stabilization actions realized (≈75% of target)	$1,500,000	$6,750,000	$7,125,000
Operating result, after plan	($2,250,355)	$2,392,063	$2,653,856
Ending fund balance	$17,566,272	$19,958,335	$22,612,191
Available reserves, % of expenditures	7.6%	8.5%	9.5%

Three-Year Fiscal Stabilization Targets

Fiscal Stabilization Strategy	2026-27	2027-28	2028-29
Staffing Reductions through Attrition and, if Necessary, Position Reductions	$0	$1,000,000	$1,000,000
SERP & Strategic Workforce Restructuring	$0	$3,000,000	$3,000,000
Hiring Freeze & Vacancy Control	$500,000	$750,000	$750,000
Special Education Cost Containment & Contract Reductions	$500,000	$1,500,000	$1,500,000
LCAP Funding Alignment & Categorical Maximization	$250,000	$1,000,000	$1,000,000
Administrative & Organizational Efficiencies	$250,000	$500,000	$500,000
Attendance Improvement & Revenue Enhancement	$250,000	$500,000	$750,000
Facility Use, Developer Fees & Revenue Strategies	$100,000	$250,000	$500,000
Operational, Utility & Contract Efficiencies	$150,000	$500,000	$500,000
Annual Stabilization Impact	**$2.0M**	**$9.0M**	**$9.5M**

Unrestricted Structural Deficit and Reserve Recovery

Unrestricted General Fund	2026-27	2027-28	2028-29
Beginning fund balance	$19,816,627	$17,566,272	$19,958,335
Operating deficit, before plan	($3,750,355)	($4,357,937)	($4,471,144)
Stabilization actions realized (≈75% of target)	$1,500,000	$6,750,000	$7,125,000
Operating result, after plan	($2,250,355)	$2,392,063	$2,653,856
Ending fund balance	$17,566,272	$19,958,335	$22,612,191
Available reserves, % of expenditures	7.6%	8.5%	9.5%

Fiscal Stabilization Timeline 2026-27 Foundation Year

Timeline	Action
Summer/Fall 2026	Update and implement Fiscal Stabilization Plan
Summer/Fall 2026	Launch PARS SERP feasibility study
Summer/Fall 2026	Review all vacancies before replacement
Fall 2026	Develop staffing ratios aligned to enrollment
Fall 2026	Review Special Education staffing and contracts
Fall 2026	Review all LCAP contributing actions
Fall 2026	Implement Special Education improvement plan
December 2026	Organizational efficiency review
January 2027	Identify staffing reductions for 2027-28
Budget Adoption 2027	Adopt first phase of stabilization actions

Long-Term Fiscal Strategy 2027-28 Through 2028-29

Timeline	Action
Fall 2027	Continue enrollment-based staffing alignment
December 2027	Identify additional reductions for 2028-29
Budget Adoption 2028	Implement full stabilization strategy
2028-29	Begin reserve rebuilding phase

Next Steps

- ❑Closely monitor enrollment and align staffing accordingly
- ❑Start Supplemental Early Retirement Program (SERP)
- ❑Identify additional expenditure reductions
- ❑Evaluate strategies to increase revenues
- ❑Year-end Audit
- ❑Unaudited Actuals: September

Appreciation

Thank you to the BUSD **Fiscal Services Team** for their diligence and professionalism

Thank you, Fiscal Services!

- Maricela Salinas – Director of Fiscal Services
- Jeannette Victoria – Supervisor of Budget & Finance
- Terri Ramirez-Adams – Senior Administrative Secretary
- Cheretta Wade – Administrative Secretary
- Dylan Young – Financial Analyst
- Ian Bolles – Financial Analyst
- Jennifer Scott – Financial Analyst
- Julie Nuno – Budget/Accounting Technician
- Rose Wallace – Budget/Accounting Technician
- Tyler Beauregard – Financial Analyst
- Victoria Monge – Budget/Accounting Technician
- William Lindley – Budget/Accounting Technician

Questions?



2026-27 Adopted Budget

Public Hearing

July 1, 2026 Budget Adoption

Burbank Unified School District

Los Angeles County • CDS 19 64337 0000000

1900 W. Olive Ave., Burbank, CA 91506

Public Hearing: June 18, 2026 at 6:00 PM

Budget Adoption: June 25, 2026

Budget available for inspection: June 15, 2026

Burbank Unified School District

2026-27 Budget Adoption Narrative

2025-26 Estimated Actuals and 2026-27 Adopted Budget

CDS 19-64337-0000000 | Los Angeles County
Public Hearing: June 18, 2026 | Adoption: June 25, 2026

Executive Summary

This narrative supports the Burbank Unified School District 2026-27 Adopted Budget as presented on SACS Form 01. It documents the District's General Fund position for the 2025-26 Estimated Actuals and explains the assumptions, revenue and expenditure changes, staffing, contributions, fund balance, reserves, and cash position reflected in the 2026-27 Adopted Budget. The multiyear projection for 2027-28 and 2028-29 is addressed in the companion Multiyear Projection Support Narrative.

Total General Fund revenues are budgeted at $231,861,685 for 2026-27, an increase of $10,525,569 (4.8%) over the 2025-26 Estimated Actuals of $221,336,116, driven principally by the 4.31% combined Local Control Funding Formula (LCFF) cost-of-living adjustment in the Governor's May Revise. Total expenditures before transfers out are budgeted at $230,755,244, an increase of $1,470,716 (0.6%), as step-and-column movement and program changes are largely offset by the non-recurrence of elevated 2025-26 legal and capital costs.

After transfers out, the combined General Fund net change in fund balance is $(643,559), close to break-even on a combined basis. The structural pressure is concentrated in the Unrestricted General Fund, which carries an operating deficit of $(3,750,355) funded from accumulated balances. The combined ending fund balance is projected at $37,994,042, and the District meets the statutory 3% Reserve for Economic Uncertainties standard.

Key takeaways. (1) Revenue growth in 2026-27 comes almost entirely from the cost-of-living adjustment, not enrollment, which continues to decline by roughly 1.2% per year. (2) The Unrestricted General Fund operates at a structural deficit that draws down available balances over the projection period. (3) Reserves remain well above the 3% minimum in the budget year, but the multiyear trajectory is the central planning issue addressed by the District's developing Fiscal Stabilization Plan. (4) A temporary cash low point from November through March will be bridged by a planned interfund borrowing.

Forward-Looking Statement

The figures in this document are based on information available as of early June 2026, including the Governor's 2026-27 May Revise, current restricted revenue awards, and the District's adopted staffing and program plans. Pending collective bargaining agreements remains in negotiation and is not included in these figures; its fiscal effect will be incorporated once an

agreement is reached and ratified. Should state budget conditions change upon enactment of the 2026-27 Budget Act, should economic conditions affect property tax collections or LCFF state aid, or should any planned revenue offset or expenditure adjustment not materialize as assumed, the budget will be updated at the First and Second Interim reporting periods in accordance with Education Code sections 42130 and 42131.

General Fund Overview

The table below summarizes the combined (Unrestricted and Restricted) General Fund for the 2025-26 Estimated Actuals and the 2026-27 Adopted Budget, consistent with SACS Form 01.

General Fund (Combined)	2025-26 EA	2026-27 BA	$ Change	%
Total Revenues	$221,336,116	$231,861,685	$10,525,569	4.8%
Total Expenditures	$229,284,528	$230,755,244	$1,470,716	0.6%
Excess (Deficiency) before Other Uses	**($7,948,412)**	**$1,106,441**	**$9,054,853**	
Transfers Out	($2,000,000)	($1,750,000)	$250,000	-12.5%
Net Increase (Decrease) in Fund Balance	**($9,948,412)**	**($643,559)**	**$9,304,853**	
Beginning Fund Balance	$48,586,013	$38,637,601		
Ending Fund Balance	**$38,637,601**	**$37,994,042**	**($643,559)**	**-1.7%**

On a combined basis the 2026-27 budget is nearly balanced. The improvement from a $(9,948,412) net decrease in 2025-26 to $(643,559) in 2026-27 reflects full-year cost-of-living revenue together with the non-recurrence of one-time 2025-26 costs. The combined view masks the underlying dynamic, which is best understood by separating the Unrestricted and Restricted sides.

Unrestricted vs. Restricted

2026-27 Adopted Budget	Unrestricted	Restricted	Combined
Total Revenues	$183,284,053	$48,577,632	$231,861,685
Total Expenditures	$144,175,130	$86,580,113	$230,755,244
Transfers Out	($1,750,000)	$0	($1,750,000)
Contributions (net)	($41,109,278)	$41,109,278	$0
Net Increase (Decrease)	**($3,750,355)**	**$3,106,797**	**($643,559)**

The Unrestricted General Fund, the operating core of the District, carries a $(3,750,355) deficit in 2026-27, funded from accumulated fund balance. The Restricted side shows a positive net change of $3,106,797, reflecting restricted revenues and contributions that exceed budgeted restricted spending in the budget year; those balances remain legally committed to their programs. The $41,109,278 contribution from Unrestricted to Restricted programs is the mechanism by which the District funds Special Education, routine restricted maintenance, and

other restricted obligations that exceed their dedicated revenue, and is summarized in the Contributions section below.

Revenues

Revenue Source	2025-26 EA	2026-27 BA	$ Change	%
LCFF Sources (8010-8099)	$171,000,278	$176,169,439	$5,169,161	3.0%
Federal Revenue (8100-8299)	$8,175,655	$8,635,483	$459,828	5.6%
Other State Revenue (8300-8599)	$33,906,558	$39,090,683	$5,184,125	15.3%
Other Local Revenue (8600-8799)	$8,253,625	$7,966,080	($287,545)	-3.5%
Total Revenues	**$221,336,116**	**$231,861,685**	**$10,525,569**	**4.8%**

LCFF Sources

LCFF revenue is calculated using the FCMAT LCFF Calculator (May 2026 release 17.1c) and ties to the General Fund at a $0 variance. Total LCFF sources are budgeted at $176,169,439, an increase of $5,169,161 (3.0%). The increase is attributable to the cost-of-living adjustment, not attendance, which continues to decline. The 2025-26 General Fund LCFF total of $171,000,278 exceeds the Calculator's current-year entitlement of $170,348,515 by a one-time $651,763 prior-year State Aid adjustment recorded in 2025-26; the 2026-27 budget includes no such adjustment and ties to the Calculator exactly.

LCFF by Object (Combined)	2025-26 EA	2026-27 BA
State Aid, Current Year (8011)	$72,211,986	$76,146,323
Education Protection Account (8012)	$20,512,752	$22,399,339
Property Taxes (8021-8089)	$77,623,777	$77,623,777
State Aid, Prior Years (8019)	$651,763	$0
Total LCFF Sources	**$171,000,278**	**$176,169,439**

Property tax revenue is budgeted on the county's P-2 certification and held flat at $77,623,777, an assumption the District will revisit as apportionments are received from Los Angeles County. State aid remains the District's largest single funding source.

Cost-of-Living Adjustment

The Governor's May Revise establishes two COLA components for 2026-27: a statutory COLA of 2.87% applied to categorical programs and an augmentation of 1.44% applied to the LCFF Base Grant, Grade Span Adjustment, and Supplemental Grant. The combined effect on the LCFF entitlement is 4.31%. Consistent with the current calculator release, the Transitional Kindergarten and Home-to-School Transportation add-ons receive the statutory rate only.

Average Daily Attendance and Enrollment

Funded ADA is budgeted at 13,316.76 under the three-year average method authorized by Education Code section 42238.05, which softens but does not eliminate the impact of declining enrollment. Enrollment and attendance are declining approximately 1.2% per year, the District's five-year average. The Unduplicated Pupil Percentage is approximately 39%, below the 55% threshold for Concentration Grant funding.

Students	2025-26 EA	2026-27 BA
Funded ADA (3-year average)	13,440.58	13,316.76
Current-year ADA (P-2)	13,063.63	12,908.00
Unduplicated Pupil % (UPP)	38.49%	39.38%

Federal, Other State, and Other Local Revenue

- **Federal (+$0.46M, +5.6%):** updated Title allocations and restricted carryover budgeted at adoption, net of zeroing the Title III immigrant program pending confirmation of an award.
- **Other State (+$5.18M, +15.3%):** the 2.87% statutory COLA on categorical programs and the May Revise increase in Special Education funding, budgeted at approximately 40% above the prior-year level, which accounts for the majority of the change.
- **Other Local (($0.29M), -3.5%):** minor true-down of local donations, refunds, and interest to expected levels. Lottery is budgeted at $190 per ADA unrestricted and $82 per ADA restricted for instructional materials.

Expenditures

Total expenditures before transfers out increase 0.7%. The modest growth reflects two offsetting forces: contractual salary and benefit movement on one hand, and the non-recurrence of elevated 2025-26 one-time costs.

Expenditures by Object (Combined Fund 01)	2025-26 EA	2026-27 BA	$ Change	%
Certificated Salaries (1000)	$84,082,646	$86,344,415	$2,261,769	2.7%
Classified Salaries (2000)	$39,332,924	$39,797,773	$464,849	1.2%
Employee Benefits (3000)	$51,250,077	$52,116,438	$866,361	1.7%
Books and Supplies (4000)	$6,467,317	$8,010,822	$1,543,505	23.9%
Services and Other Operating (5000)	$44,372,124	$43,925,323	($446,801)	-1.0%
Capital Outlay (6000)	$1,602,158	$81,000	($1,521,158)	-94.9%
Other Outgo (7100-7299, 7400-7499)	$2,939,713	$1,567,236	($1,372,477)	-46.7%
Transfers of Indirect Costs (7300)	($762,431)	($1,087,763)	($325,332)	42.7%
Total Expenditures	**$229,284,528**	**$230,755,244**	**$1,470,716**	**0.6%**

- **Certificated salaries (+$2.26M, +2.7%):** 1.5% step-and-column movement and adopted staffing changes. Positions are budgeted as filled for the full year with no vacancy savings, and no salary schedule change is assumed.
- **Classified salaries (+$0.46M, +1.2%):** 1.5% step-and-column movement, position reductions aligned to enrollment, and targeted additions. A pending classified agreement is not included.
- **Employee benefits (+$0.87M, +1.7%):** the benefit cost of the salary base at a CalSTRS employer rate of 19.10% and a CalPERS employer rate of 26.4%, per the District's position control rate schedule, with health and welfare capped at $16,750 per FTE.
- **Books and supplies (+$1.54M, +23.9%):** restricted grant and categorical carryover budgeted at adoption; unrestricted instructional materials are held to replacement-only purchasing.
- **Services and other operating (($0.45M), -1.0%):** the reset of legal services to a normalized level after elevated one-time 2025-26 costs, net of increases in Special Education transportation and property and liability insurance.
- **Capital outlay (($1.52M), -94.9%):** non-recurrence of one-time 2025-26 purchases, with major capital project spending now budgeted in the Deferred Maintenance fund (Fund 14).
- **Other outgo (($1.37M), -46.7%):** relocation of debt service, including the solar lease, approximately $1.3 million in total, to Fund 40.
- **Transfers of indirect costs:** increased indirect cost recovery to the Unrestricted General Fund, consistent with the restricted program expenditure base.

One-time and reset items in 2026-27: board election costs of $140,000 for the two seats up in November 2026, the reset of legal services to a normalized level, and the relocation of debt service to Fund 40.

Staffing and Position Control

Staffing is managed through the District's position control system and aligned to enrollment over time, primarily through attrition and the non-replacement of vacated positions. Budgeted staffing for 2026-27 is 1,408.19 FTE, a net reduction of 1.19 FTE from 2025-26, under 0.1% of the workforce.

Bargaining Unit	2025-26 FTE	2026-27 FTE	Change
BTA (certificated)	712.62	711.62	(1.00)
CSEA (classified)	575.76	568.32	(7.44)
SAM, certificated management	68.00	70.00	2.00
SAM, classified management	53.00	58.25	5.25
Total	**1,409.38**	**1,408.19**	**(1.19)**

The net change reflects offsetting movement within the units. Additions include an assistant superintendent for Special Education and student services, two Special Education counselors, a

director of expanded learning, two athletic trainers, communications staff, technology support positions, a position control analyst, and Nutrition Services positions in Fund 13. Reductions, effective July 1, 2026, include certificated teaching and administrative positions and classified instructional support positions in restricted Special Education programs, where the largest single change is a 12.19 FTE reduction in restricted classified staffing. Unrestricted classified staffing increases 4.75 FTE, and restricted certificated staffing increases 2.6 FTE.

Total budgeted salaries rise modestly even as headcount edges down, reflecting step-and-column movement. Salaries across all funds are summarized below; General Fund salaries of $126,142,188 represent approximately 54% of total General Fund expenditures and other financing uses.

Salaries by Fund (Objects 1000-2999)	2025-26 EA	2026-27 BA	Change
General Fund, Unrestricted	$87,476,355	$89,651,754	$2,175,399
General Fund, Restricted	$35,939,215	$36,490,434	$551,219
General Fund Total	**$123,415,570**	**$126,142,188**	**$2,726,618**
Adult Education (Fund 11)	$4,133,108	$4,386,270	$253,162
Child Development (Fund 12)	$1,836,688	$1,907,782	$71,094
Cafeteria (Fund 13)	$2,394,803	$2,772,035	$377,232
Building (Fund 21)	$387,897	$360,394	($27,503)
All Funds Total	**$132,168,066**	**$135,568,669**	**$3,400,603**

Contributions Summary

The Unrestricted General Fund contributes $41,109,278 to restricted programs in 2026-27, a decrease of $4,518,269 (9.9%) from the 2025-26 Estimated Actuals of $45,627,547. The two largest components are Special Education, approximately $37.1 million including related mental health services and the local share of federal programs, and the routine restricted maintenance account at $6,978,000, which fully meets the 3% requirement of Education Code section 17070.75. A $2,900,000 redevelopment pass-through revenue offset, applied by annual Board resolution, reduces the maintenance contribution that would otherwise be required.

The year-over-year decrease is driven by Special Education, where increased AB 602 funding lowered the required contribution by approximately $4.0 million. The program-by-program breakdown is summarized below; the multiyear trend is provided in the Multiyear Projection Support Narrative at the request of the Chief Business Official.

Contribution by Program (Combined)	2025-26 EA	2026-27 BA	Change
Special Education	$41,116,681	$37,132,635	($3,984,046)
Routine Restricted Maintenance	$6,939,000	$6,978,000	$39,000
Redevelopment Pass-Through Offset	**($2,300,000)**	**($2,900,000)**	**($600,000)**
All Other Programs (net)	($128,134)	($101,357)	$26,777
Total Net Contribution	**$45,627,547**	**$41,109,278**	**($4,518,269)**

Fund Balance and Reserves

The combined General Fund ending balance is projected at $37,994,042 for 2026-27. The components below distinguish restricted balances, which are legally committed to their programs, from balances available for general operations.

Components of Ending Fund Balance (Combined)	2025-26 EA	2026-27 BA
Nonspendable (9710-9719)	$45,000	$45,000
Restricted (9740)	$18,820,975	$21,927,771
Assigned, Other Assignments (9780)	$12,833,087	$9,046,112
Reserve for Economic Uncertainties (9789)	$6,938,540	$6,975,160
Unassigned/Unappropriated (9790)	$(1)	$(1)
Total Ending Fund Balance	**$38,637,601**	**$37,994,042**

The Reserve for Economic Uncertainties of $6,975,160 equals 3.00% of total expenditures and other financing uses. The 3% level is the statutory floor, not the District's full reserve position: including Assigned balances of $9,046,112, total available reserves are approximately 6.9% of expenditures in the budget year. Those balances are being applied over the projection period to absorb the unrestricted operating deficit while the District aligns its cost base to enrollment. The District's local reserve policy is 6%, the 3% statutory minimum plus a 3% Board reserve.

Reserves in Excess of the Minimum, Disclosure per Education Code Section 42127(a)

In accordance with Education Code section 42127(a), the District discloses the minimum reserve and the balances held in excess of it. This disclosure is provided for public review at the Adopted Budget public hearing.

Reserve in Excess (Fund 01)	2026-27 BA
Assigned Fund Balance (9780)	$9,046,112
Reserve for Economic Uncertainties (9789)	$6,975,160
Unassigned/Unappropriated (9790)	$0
Total Assigned, Unassigned, and REU	**$16,021,272**
Minimum Recommended Reserve (3%)	$6,975,160
Amount in Excess of Minimum	**$9,046,112**

Reasons for reserves above the minimum. The District maintains balances above the 3% minimum to provide for (1) the revenue impact of continuing enrollment decline of approximately 1.2% per year; (2) federal Title and IDEA funding uncertainty; (3) timing variability in state apportionment receipts, which requires intra-year cash capacity; and (4) the District's multiyear transition to a cost base aligned with enrollment. These balances are budgeted to fund the unrestricted operating deficit during that transition.

10% local reserve cap (Education Code section 42127.01). As a non-basic-aid district with ADA above 2,501, the District is subject to the 10% cap on combined assigned and unassigned reserves. The 2026-27 ratio of assigned, unassigned, and REU balances ($16,021,272) to total expenditures and other financing uses ($232,505,244) is approximately 6.9%, below the cap; no reclassification is required.

Cash Flow and Interfund Borrowing

The District's cash flow projections show a temporary General Fund low point beginning in November and continuing through March. The pattern is typical for California districts, whose largest receipts, the second installment of secured property taxes and the third Education Protection Account apportionment, arrive in April. To maintain positive cash through the low point, the District plans a temporary interfund borrowing of $10,000,000 from Fund 40 (Special Reserve for Capital Outlay Projects) in October 2026, repaid in April 2027 once those receipts arrive. The borrowing and repayment occur within the same fiscal year, consistent with Education Code section 42603.

The planned borrowing is a routine cash management measure, not an indicator of fiscal distress. The multiyear cash outlook, including the corresponding 2027-28 plan, is addressed in the Multiyear Projection Support Narrative.

Other Funds

Beyond the General Fund, the District budgets the following funds, each presented on its respective SACS form in the Adopted Budget: Adult Education (Fund 11), Child Development (Fund 12), Cafeteria (Fund 13), Deferred Maintenance (Fund 14), Building (Fund 21), Capital Facilities (Fund 25), County School Facilities (Fund 35), Special Reserve for Capital Outlay Projects (Fund 40), Bond Interest and Redemption (Fund 51), and Self-Insurance (Fund 67). Fund 14 is actively budgeted in 2026-27, reflecting a one-time insurance-claim recovery of approximately $2.0 million received in 2025-26 and $960,000 of capital project expenditure budgeted in 2026-27. Fund 40 is the source of the planned cash flow borrowing described above, and Fund 67 holds the District's set-aside for long-term retiree benefit obligations described in the Multiyear Projection Support Narrative.

Closing

The 2026-27 Adopted Budget funds the District's instructional program and meets the statutory minimum reserve in the budget year. The central fiscal challenge, a structural unrestricted operating deficit in the context of declining enrollment, is addressed through the District's developing Fiscal Stabilization Plan and the multiyear assumptions documented in the companion Multiyear Projection Support Narrative. The budget will be updated at the First and Second Interim reporting periods as state actions are enacted and pending items are finalized.

Questions regarding this narrative may be directed to the District's Director of Fiscal Services or Chief Business Official.

Burbank Unified School District

Multiyear Projection Support Narrative

2026-27 Adopted Budget and the 2027-28 and 2028-29 Projection Years

CDS 19-64337-0000000 | Los Angeles County
Public Hearing: June 18, 2026 | Adoption: June 25, 2026

Executive Summary

This narrative supports the Burbank Unified School District 2026-27 Adopted Budget Multiyear Projection, prepared in FCMAT ProjectionPro and reported on SACS Form MYP. It documents the methodology and assumptions underlying the projection of revenues, expenditures, contributions, reserves, and fund balance for the budget year (2026-27) and the two subsequent fiscal years (2027-28 and 2028-29), in accordance with Education Code section 42127 and the Criteria and Standards Review on SACS Form 01CS.

The District maintains compliance with the statutory 3% Reserve for Economic Uncertainties requirement in the budget year and both subsequent years. The combined ending fund balance is projected at $37,994,042 in 2026-27, declining to $30,321,299 by 2028-29 as the District draws down accumulated unrestricted balances during a period of declining enrollment.

The defining feature of the projection is a structural deficit in the Unrestricted General Fund: $(3,750,355) in 2026-27, $(4,357,937) in 2027-28, and $(4,471,144) in 2028-29. The Unrestricted ending fund balance declines from $19,816,627 (2025-26 Estimated Actuals) to $7,237,191 by 2028-29, a reduction of approximately 63.5%. Because this exceeds a 50% reduction in reserves over the projection period, the District is developing a Fiscal Stabilization Plan, summarized in the final section of this narrative.

Forward-Looking Statement

The figures in this document are forward-looking projections based on information available as of June 2026, including the Governor's 2026-27 May Revise, current restricted revenue awards, and the District's adopted staffing and program plans. A pending classified (CSEA) agreement remains in negotiation and is not included; it will be reflected once reached and ratified. Should state budget conditions change upon enactment of the 2026-27 Budget Act or a future state budget, should economic conditions affect property tax collections or LCFF state aid, or should any planned expenditure reduction or revenue offset not materialize as assumed, the projection will be updated at the First and Second Interim reporting periods in accordance with Education Code sections 42130 and 42131.

Reserve Compliance Summary

The Reserve for Economic Uncertainties meets the 3% minimum standard in each year of the projection horizon. Total expenditures and other financing uses and the corresponding reserve amounts are taken from SACS Form MYP.

Fiscal Year	REU (9789)	Total Exp. & Other Uses	REU %
2026-27 (Budget Year)	$6,975,160	$232,505,244	3.00%
2027-28 (Year 2)	$7,060,020	$235,333,986	3.00%
2028-29 (Year 3)	$7,163,357	$238,778,545	3.00%

The 3.00% reserve is the statutory floor, not the District's full reserve position. Including Assigned balances, total available reserves are approximately 6.9% of expenditures in 2026-27, 5.0% in 2027-28, and 3.0% in 2028-29, above the floor in every year though declining as balances are applied to operations. The District's local reserve policy is 6%, the 3% statutory minimum plus a 3% Board reserve. The disclosure of reserves in excess of the minimum required by Education Code section 42127(a) is presented in the companion Budget Adoption Narrative.

Revenue Assumptions

LCFF Sources

LCFF revenue is calculated using the FCMAT LCFF Calculator (May 2026 release 17.1c) and ties to the General Fund at a $0 variance in all three years. Total LCFF sources are projected at $176,169,439 in 2026-27, $179,551,031 in 2027-28, and $181,868,750 in 2028-29. Growth is driven by the cost-of-living adjustment, partially offset by declining funded ADA.

LCFF Entitlement Component	2026-27	2027-28	2028-29
Base Grant	$154,538,440	$157,322,361	$159,366,096
Grade Span Adjustment	$5,663,379	$5,757,962	$5,828,619
Supplemental Grant	$12,617,495	$13,062,733	$13,212,274
Concentration Grant	$0	$0	$0
Add-on: TIIG	$880,303	$880,303	$880,303
Add-on: Home-to-School Transportation	$342,230	$353,524	$364,448
Add-on: Transitional Kindergarten	$2,127,592	$2,174,148	$2,217,010
Total LCFF Entitlement	**$176,169,439**	**$179,551,031**	**$181,868,750**
Entitlement per ADA	$13,229	$13,672	$14,089

Property tax revenue is held flat at $77,623,777 in all three years, reflecting no assumed growth in assessed valuation, an assumption the District will revisit as apportionments are received from Los Angeles County. The Unduplicated Pupil Percentage of approximately 39% remains

below the 55% Concentration Grant threshold, so the District receives no concentration funding in any year.

Cost-of-Living Adjustment

The Governor's May Revise establishes two COLA components for 2026-27: a statutory COLA of 2.87% applied to categorical programs and the Special Education base, and an augmentation of 1.44% applied to the LCFF Base Grant, Grade Span Adjustment, and Supplemental Grant, a combined 4.31%. Out-year COLA is assumed at statutory rates only, 3.30% in 2027-28 and 3.09% in 2028-29, with no augmentation assumed absent enactment in a subsequent Budget Act. Consistent with the current calculator release, the Transitional Kindergarten and Home-to-School Transportation add-ons receive the statutory rate only.

Average Daily Attendance and Enrollment

Funded ADA is projected under the three-year average method of Education Code section 42238.05. Enrollment and attendance are projected to decline approximately 1.2% per year, the District's five-year average. The declining enrollment trajectory is the principal structural pressure on LCFF revenue and the primary driver of the District's staffing alignment and fiscal stabilization strategy.

Students	2026-27	2027-28	2028-29
Enrollment	13,670	13,506	13,344
Funded ADA (3-year average)	13,316.76	13,132.96	12,908.62
Unduplicated Pupil % (UPP)	39.38%	40.05%	39.99%

Special Education

The District is a member of the Foothill SELPA, whose administrative unit is Glendale Unified School District; Burbank represents approximately 31% of the SELPA. The projection incorporates the May Revise increase in Special Education funding, budgeted at approximately 40% above the prior-year level. The increase reflects the May Revise Special Education base rate of $1,340 per unit of average daily attendance; the District budgets below the full rate as a conservative estimate, recognizing declining enrollment and potential SELPA holdbacks. Special Education remains the District's largest restricted obligation and the largest use of the Unrestricted contribution, as detailed in the Contributions section.

Federal, Other State, and Other Local Revenue

Federal revenue is projected approximately flat at $8,635,483, all restricted, with no Title program growth assumed and the Title III immigrant program zeroed pending confirmation of an award. Other State revenue reflects the 2.87% statutory COLA on eligible categorical and Special Education programs. Lottery is projected at $190 per ADA unrestricted and $82 per ADA restricted for instructional materials, with no rate change assumed. Other Local revenue is held essentially flat.

Expenditure Assumptions

Certificated and Classified Salaries

Salary projections apply a 1.5% step-and-column adjustment to both certificated and classified units in each year. No salary schedule change is assumed for either unit, and a pending classified agreement is not included; it will be reflected upon ratification. Combined certificated salaries are projected at $86,344,415 in 2026-27, $87,273,981 in 2027-28, and $88,583,091 in 2028-29; combined classified salaries at $39,797,773, $40,367,340, and $40,948,357 for the same years.

Staffing

Budgeted staffing for 2026-27 is 1,408.19 FTE, a net reduction of 1.19 FTE from the prior year, under 0.1% of the workforce, managed through the District's position control system. Detail by bargaining unit and by fund is presented in the staffing section of the companion Budget Adoption Narrative. The out-years assume continued alignment of staffing to enrollment, primarily through attrition and the non-replacement of vacated positions, as described in the Fiscal Stabilization Plan.

Employee Benefits

Benefits are projected on the salary base at a CalSTRS employer rate held at 19.10% and a CalPERS employer rate of 26.4% in 2026-27, per the District's position control rate schedule, with out-year CalPERS rates following the School Services of California Dartboard schedule in the District's ProjectionPro model, plus the standard OASDI, Medicare, unemployment insurance, and workers' compensation rates. The District's health and welfare contribution is capped at $16,750 per FTE, which limits benefit cost growth from step-and-column movement. Combined benefits are projected at $52,116,438 in 2026-27, $52,677,315 in 2027-28, and $52,821,490 in 2028-29.

Books, Supplies, Services, and Other Operating Expenditures

Restricted books and supplies budgets include grant and categorical carryover loaded at adoption, declining as those balances are expended. Instructional materials purchasing is held to replacement levels to preserve the restricted lottery balance. Services and other operating expenditures reflect normalized legal services costs after elevated one-time 2025-26 expense, increased Special Education transportation, and higher property and liability insurance. Out-year operating costs are escalated modestly for cost growth.

Contributions from Unrestricted to Restricted Programs

This section is provided at the request of the Chief Business Official to give a clear and accurate picture of the District's contributions from the Unrestricted General Fund to restricted programs. Contributions fund restricted obligations whose dedicated revenue is insufficient to cover their full cost. The total net contribution is $41,109,278 in 2026-27, a decrease of $4,518,269 from the 2025-26 Estimated Actuals, growing to $42,697,165 in 2027-28 and $43,331,193 in 2028-29 as restricted program costs escalate faster than restricted revenue.

Program (Contribution by Resource)	2025-26 EA	2026-27 BA	Change
Special Education (Res 6500, 6546, 3310, 3315)	$41,116,681	$37,132,635	($3,984,046)
Routine Restricted Maintenance (Res 8150)	$6,939,000	$6,978,000	$39,000
Redevelopment Pass-Through Offset	($2,300,000)	($2,900,000)	($600,000)
All Other Programs (net)	($128,134)	($101,357)	$26,777
Total Net Contribution (per Form 01/MYP)	**$45,627,547**	**$41,109,278**	**($4,518,269)**

Special Education. Special Education is the largest contribution, approximately $37.1 million, or 90% of the total. State and federal funding covers only a portion of the District's legally required program. The contribution declined approximately $4.0 million from the prior year, as increased Special Education state revenue under the May Revise reduced the Unrestricted support required for the program. Special Education should not be characterized as the driver of the District's structural pressures.

Routine Restricted Maintenance. The District contributes $6,978,000 to the routine restricted maintenance account, which fully meets the 3% of total General Fund expenditures and other financing uses required under Education Code section 17070.75 ($6,975,157 for 2026-27).

Redevelopment pass-through offset. The District applies approximately $2,900,000 of redevelopment pass-through revenue in 2026-27 against what would otherwise require additional Unrestricted contribution toward the maintenance program. The offset is authorized by annual Board resolution and is an application of ongoing local revenue, not a one-time measure.

All other programs. Remaining contributions, including Career Technical Education and the City joint-use agreement, are modest and are more than offset by revenue returned to the Unrestricted General Fund from facility use, producing the small net credit shown above.

OPEB and Strategic Transfers

The District budgets a transfer out of $1,750,000 in each projection year, following a $2,000,000 set-aside in 2025-26. For 2026-27 the transfer is budgeted to Fund 67 (Self-Insurance). For 2027-28 and 2028-29 the destination has not been determined; the transfer represents a Board-designated set-aside toward the District's long-term retiree benefit (OPEB) and other long-term obligations and may be directed to Fund 67 or Fund 14 (Deferred Maintenance), or another Board-designated fund, based on priority and need.

Characterization. Fund 67 is maintained in-house and is not an irrevocable trust under GASB Statement No. 75. The set-aside is therefore properly described as a Board-designated reserve toward future retiree benefit costs. It strengthens the District's capacity to manage those costs on a pay-as-you-go basis, but it does not by itself reduce the District's net OPEB liability, approximately $65.0 million, in the manner that a contribution to an irrevocable trust would.

In conjunction with the set-aside, the District now charges retiree benefit costs directly to benefits across all funds, so that Adult Education, Child Development, Cafeteria, and categorical programs bear their proportionate share rather than relying on a single General Fund transfer.

Reserves and Fund Balance

Components of Ending Fund Balance

Component (Combined)	2026-27	2027-28	2028-29
Nonspendable (9710-9719)	$45,000	$45,000	$45,000
Restricted (9740)	$21,927,771	$22,449,526	$23,084,108
Assigned, Other Assignments (9780)	$9,046,112	$4,603,315	$28,834
Reserve for Economic Uncertainties (9789)	$6,975,160	$7,060,020	$7,163,357
Unassigned/Unappropriated (9790)	$(1)	$0	$0
Total Ending Fund Balance	**$37,994,042**	**$34,157,861**	**$30,321,299**

Total Available Reserves

Consistent with the reserve disclosure presented at the public hearing under Education Code section 42127(a), the table below calculates the District's total assigned and unassigned balances and the amount exceeding the minimum recommended Reserve for Economic Uncertainties in each year. The unassigned balance includes the Reserve for Economic Uncertainties, consistent with its SACS classification.

Total Available Reserves (Fund 01)	2026-27	2027-28	2028-29
1) Assigned Fund Balance	$9,046,112	$4,603,315	$28,834
2) Unassigned Fund Balance (incl. REU)	$6,975,160	$7,060,020	$7,163,357
3) Total Assigned and Unassigned (1 + 2)	**$16,021,272**	**$11,663,335**	**$7,192,191**
4) Minimum Recommended REU	$6,975,160	$7,060,020	$7,163,357
5) Amount Exceeding Minimum REU (3 - 4)	**$9,046,112**	**$4,603,315**	**$28,834**
Total Available as % of Expenditures and Other Uses	6.9%	5.0%	3.0%

The amount exceeding the minimum declines from $9,046,112 in the budget year to $28,834 by 2028-29 as assigned balances are applied to the unrestricted operating deficit. The reasons for balances above the minimum are presented in the companion Budget Adoption Narrative.

Unrestricted Ending Fund Balance Trajectory

The structural story of the projection is best seen in the Unrestricted General Fund, where annual operating deficits draw down accumulated balances:

Unrestricted General Fund	Operating Result	Ending Fund Balance
2025-26 Estimated Actuals (basis)		$19,816,627
2026-27 Budget Year	($3,750,355)	$16,066,272
2027-28 Year 2	($4,357,937)	$11,708,335
2028-29 Year 3	($4,471,144)	$7,237,191

Over the projection period the Unrestricted ending fund balance declines from $19,816,627 to $7,237,191, a reduction of approximately 63.5%. The drawdown is concentrated in the Assigned component, which is applied to absorb operating deficits during the District's transition to a cost base aligned with enrollment, while the Reserve for Economic Uncertainties is held at the 3% minimum throughout. Because the reduction in unrestricted reserves exceeds 50% over the period, the District is developing the Fiscal Stabilization Plan described below.

Cash Flow Outlook

The District's monthly cash projections show a recurring General Fund low point from November through March, ahead of the second installment of secured property taxes and the third Education Protection Account apportionment in April. The District plans temporary interfund borrowings from Fund 40 (Special Reserve for Capital Outlay Projects) of $10,000,000 in October 2026, repaid in April 2027, and $12,000,000 in October 2027, repaid in June 2028. Each borrowing is repaid within the fiscal year in which it is made, consistent with Education Code section 42603, and is a routine cash management measure.

Fiscal Stabilization Plan

The multiyear projection shows the Unrestricted General Fund operating at a structural deficit of approximately $4 million per year, drawing unrestricted reserves down approximately 63% over the projection period. While the District meets the 3% reserve standard in every year, the trajectory is not sustainable beyond the projection horizon without corrective action. The District is therefore developing a Fiscal Stabilization Plan to restore structural balance over time, built on the following principles:

- **Align staffing to enrollment through attrition.** With enrollment declining approximately 1.2% per year, the District intends to align staffing primarily through natural attrition and the non-replacement of vacated positions, guided by defined staffing ratios.
- **Early retirement incentive.** The District is evaluating a supplementary early retirement incentive to accelerate savings from attrition. Savings would begin in 2027-28; the design and participation level are not yet final and are therefore not included in this projection.
- **Apply ongoing local revenue.** The District continues to apply redevelopment pass-through revenue, approximately $2 million per year, to offset contributions, reducing pressure on the Unrestricted General Fund.
- **Protect the classroom.** Reductions are prioritized to preserve direct instructional services to the greatest extent possible.

As a measure of its commitment, the District is targeting approximately $4 million in ongoing reductions and budget solutions over the projection period, with the goal of restoring structural balance and strengthening the unrestricted ending balance trajectory. The plan will be developed in consultation with the Governing Board and refined at each interim reporting period as enrollment, attrition, and state funding conditions become clearer.

Closing

This Multiyear Projection demonstrates that the District meets the statutory 3% reserve standard in the budget year and both subsequent years, while disclosing the structural unrestricted operating deficit and the District's plan to address it. The revenue assumptions are conservative, with flat property taxes, no out-year augmentation, and no assumed Title or concentration growth, and the expenditure and contribution assumptions reflect the District's adopted staffing and program plans. The projection will be updated at the First and Second Interim reporting periods in accordance with Education Code sections 42130 and 42131.

Questions regarding this projection may be directed to the District's Director of Fiscal Services or Chief Business Official.

G = General Ledger Data; S = Supplemental Data

Form	Description	Page	Data Supplied For: 2025-26 Estimated Actuals	2026-27 Budget
01	General Fund/County School Service Fund	1	GS	GS
08	Student Activity Special Revenue Fund			
09	Charter Schools Special Revenue Fund			
10	Special Education Pass-Through Fund			
11	Adult Education Fund	46	G	G
12	Child Development Fund	52	G	G
13	Cafeteria Special Revenue Fund	58	G	G
14	Deferred Maintenance Fund	64	G	G
15	Pupil Transportation Equipment Fund			
17	Special Reserve Fund for Other Than Capital Outlay Projects			
18	School Bus Emissions Reduction Fund			
19	Foundation Special Revenue Fund			
20	Special Reserve Fund for Postemployment Benefits			
21	Building Fund	69	G	G
25	Capital Facilities Fund	75	G	G
30	State School Building Lease-Purchase Fund			
35	County School Facilities Fund	81	G	G
40	Special Reserve Fund for Capital Outlay Projects	87	G	G
49	Capital Project Fund for Blended Component Units			
51	Bond Interest and Redemption Fund	93	G	G
52	Debt Service Fund for Blended Component Units			
53	Tax Override Fund			
56	Debt Service Fund			
57	Foundation Permanent Fund			
61	Cafeteria Enterprise Fund			
62	Charter Schools Enterprise Fund			
63	Other Enterprise Fund			
66	Warehouse Revolving Fund			
67	Self-Insurance Fund	98	G	G
71	Retiree Benefit Fund			
73	Foundation Private-Purpose Trust Fund			
76	Warrant/Pass-Through Fund			
95	Student Body Fund			
A	Average Daily Attendance	104	S	S
ASSET	Schedule of Capital Assets			
CASH	Cashflow Worksheet	107		S
CB	Budget Certification	115		S
CC	Workers' Compensation Certification			S
CEA	Current Expense Formula/Minimum Classroom Comp. - Actuals	118	GS	
CEB	Current Expense Formula/Minimum Classroom Comp. - Budget	120		GS
DEBT	Schedule of Long-Term Liabilities			
ESMOE	Every Student Succeeds Act Maintenance of Effort	122	GS	
ICR	Indirect Cost Rate Worksheet	124	GS	

L	Lottery Report	128	G	
MYP	Multiyear Projections - General Fund	129		GS
SEA	Special Education Revenue Allocations			
SEAS	Special Education Revenue Allocations Setup (SELPA Selection)			
SIAA	Summary of Interfund Activities - Actuals	136	G	
SIAB	Summary of Interfund Activities - Budget	140		G
01CS	Criteria and Standards Review	15	GS	GS

Burbank Unified
Los Angeles County

Budget, July 1
General Fund
Unrestricted and Restricted
Expenditures by Object

19 64337 0000000
Form 01
H8B8FABHZR(2026-27)

Description	Resource Codes	Object Codes	2025-26 Estimated Actuals Unrestricted (A)	2025-26 Estimated Actuals Restricted (B)	2025-26 Estimated Actuals Total Fund col. A + B (C)	2026-27 Budget Unrestricted (D)	2026-27 Budget Restricted (E)	2026-27 Budget Total Fund col. D + E (F)	% Diff Column C & F
A. REVENUES									
1) LCFF Sources		8010-8099	171,000,278.00	0.00	171,000,278.00	176,169,439.00	0.00	176,169,439.00	3.0%
2) Federal Revenue		8100-8299	0.00	8,175,655.00	8,175,655.00	0.00	8,635,483.00	8,635,483.00	5.6%
3) Other State Revenue		8300-8599	6,108,049.00	27,798,509.00	33,906,558.00	6,077,175.00	33,013,508.00	39,090,683.00	15.3%
4) Other Local Revenue		8600-8799	1,437,439.00	6,816,186.00	8,253,625.00	1,037,439.00	6,928,641.00	7,966,080.00	-3.5%
5) TOTAL, REVENUES			178,545,766.00	42,790,350.00	221,336,116.00	183,284,053.00	48,577,632.00	231,861,685.00	4.8%
B. EXPENDITURES									
1) Certificated Salaries		1000-1999	66,722,136.00	17,360,510.00	84,082,646.00	68,756,656.96	17,587,758.06	86,344,415.02	2.7%
2) Classified Salaries		2000-2999	20,754,219.00	18,578,705.00	39,332,924.00	20,895,096.98	18,902,676.00	39,797,772.98	1.2%
3) Employee Benefits		3000-3999	36,285,011.00	14,965,065.98	51,250,076.98	36,808,604.39	15,307,833.20	52,116,437.59	1.7%
4) Books and Supplies		4000-4999	1,674,430.00	4,792,887.00	6,467,317.00	1,838,799.00	6,172,023.00	8,010,822.00	23.9%
5) Services and Other Operating Expenditures		5000-5999	18,595,419.58	25,776,704.47	44,372,124.05	18,024,321.00	25,901,002.00	43,925,323.00	-1.0%
6) Capital Outlay		6000-6999	1,124,992.00	477,166.00	1,602,158.00	16,000.00	65,000.00	81,000.00	-94.9%
7) Other Outgo (excluding Transfers of Indirect Costs)		7100-7299 7400-7499	1,616,542.00	1,323,171.00	2,939,713.00	244,065.00	1,323,171.00	1,567,236.00	-46.7%
8) Other Outgo - Transfers of Indirect Costs		7300-7399	(1,656,600.00)	894,169.00	(762,431.00)	(2,408,413.00)	1,320,650.00	(1,087,763.00)	42.7%
9) TOTAL, EXPENDITURES			145,116,149.58	84,168,378.45	229,284,528.03	144,175,130.33	86,580,113.26	230,755,243.59	0.6%
C. EXCESS (DEFICIENCY) OF REVENUES OVER EXPENDITURES BEFORE OTHER FINANCING SOURCES AND USES (A5 - B9)			33,429,616.42	(41,378,028.45)	(7,948,412.03)	39,108,922.67	(38,002,481.26)	1,106,441.41	-113.9%
D. OTHER FINANCING SOURCES/USES									
1) Interfund Transfers									
a) Transfers In		8900-8929	0.00	0.00	0.00	0.00	0.00	0.00	0.0%
b) Transfers Out		7600-7629	2,000,000.00	0.00	2,000,000.00	1,750,000.00	0.00	1,750,000.00	-12.5%
2) Other Sources/Uses									
a) Sources		8930-8979	0.00	0.00	0.00	0.00	0.00	0.00	0.0%
b) Uses		7630-7699	0.00	0.00	0.00	0.00	0.00	0.00	0.0%
3) Contributions		8980-8999	(45,627,547.00)	45,627,547.00	0.00	(41,109,278.00)	41,109,278.00	0.00	0.0%
4) TOTAL, OTHER FINANCING SOURCES/USES			(47,627,547.00)	45,627,547.00	(2,000,000.00)	(42,859,278.00)	41,109,278.00	(1,750,000.00)	-12.5%
E. NET INCREASE (DECREASE) IN FUND BALANCE (C + D4)			(14,197,930.58)	4,249,518.55	(9,948,412.03)	(3,750,355.33)	3,106,796.74	(643,558.59)	-93.5%
F. FUND BALANCE, RESERVES									
1) Beginning Fund Balance									
a) As of July 1 - Unaudited		9791	34,014,557.57	14,571,455.17	48,586,012.74	19,816,626.99	18,820,973.72	38,637,600.71	-20.5%
b) Audit Adjustments		9793	0.00	0.00	0.00	0.00	0.00	0.00	0.0%

Description	Resource Codes	Object Codes	2025-26 Estimated Actuals			2026-27 Budget			% Diff Column C & F
			Unrestricted (A)	Restricted (B)	Total Fund col. A + B (C)	Unrestricted (D)	Restricted (E)	Total Fund col. D + E (F)	
c) As of July 1 - Audited (F1a + F1b)			34,014,557.57	14,571,455.17	48,586,012.74	19,816,626.99	18,820,973.72	38,637,600.71	-20.5%
d) Other Restatements		9795	0.00	0.00	0.00	0.00	0.00	0.00	0.0%
e) Adjusted Beginning Balance (F1c + F1d)			34,014,557.57	14,571,455.17	48,586,012.74	19,816,626.99	18,820,973.72	38,637,600.71	-20.5%
2) Ending Balance, June 30 (E + F1e)			19,816,626.99	18,820,973.72	38,637,600.71	16,066,271.66	21,927,770.46	37,994,042.12	-1.7%
Components of Ending Fund Balance									
a) Nonspendable									
Revolving Cash		9711	25,000.00	0.00	25,000.00	25,000.00	0.00	25,000.00	0.0%
Stores		9712	20,000.00	0.00	20,000.00	20,000.00	0.00	20,000.00	0.0%
Prepaid Items		9713	0.00	0.00	0.00	0.00	0.00	0.00	0.0%
All Others		9719	0.00	0.00	0.00	0.00	0.00	0.00	0.0%
b) Restricted		9740	0.00	18,820,974.98	18,820,974.98	0.00	21,927,771.72	21,927,771.72	16.5%
c) Committed									
Stabilization Arrangements		9750	0.00	0.00	0.00	0.00	0.00	0.00	0.0%
Other Commitments		9760	0.00	0.00	0.00	0.00	0.00	0.00	0.0%
d) Assigned									
Other Assignments		9780	12,833,086.99	0.00	12,833,086.99	9,046,111.66	0.00	9,046,111.66	-29.5%
e) Unassigned/Unappropriated									
Reserve for Economic Uncertainties		9789	6,938,540.00	0.00	6,938,540.00	6,975,160.00	0.00	6,975,160.00	0.5%
Unassigned/Unappropriated Amount		9790	0.00	(1.26)	(1.26)	0.00	(1.26)	(1.26)	0.0%
G. ASSETS									
1) Cash									
a) in County Treasury		9110	0.00	0.00	0.00				
1) Fair Value Adjustment to Cash in County Treasury		9111	0.00	0.00	0.00				
b) in Banks		9120	0.00	0.00	0.00				
c) in Revolving Cash Account		9130	0.00	0.00	0.00				
d) with Fiscal Agent/Trustee		9135	0.00	0.00	0.00				
e) Collections Awaiting Deposit		9140	0.00	0.00	0.00				
2) Investments		9150	0.00	0.00	0.00				
3) Accounts Receivable		9200	0.00	0.00	0.00				
4) Due from Grantor Government		9290	0.00	0.00	0.00				
5) Due from Other Funds		9310	0.00	0.00	0.00				
6) Stores		9320	0.00	0.00	0.00				
7) Prepaid Expenditures		9330	0.00	0.00	0.00				
8) Other Current Assets		9340	0.00	0.00	0.00				

Description	Resource Codes	Object Codes	2025-26 Estimated Actuals Unrestricted (A)	2025-26 Estimated Actuals Restricted (B)	2025-26 Estimated Actuals Total Fund col. A + B (C)	2026-27 Budget Unrestricted (D)	2026-27 Budget Restricted (E)	2026-27 Budget Total Fund col. D + E (F)	% Diff Column C & F
9) Lease Receivable		9380	0.00	0.00	0.00				
10) TOTAL, ASSETS			0.00	0.00	0.00				
H. DEFERRED OUTFLOWS OF RESOURCES									
1) Deferred Outflows of Resources		9490	0.00	0.00	0.00				
2) TOTAL, DEFERRED OUTFLOWS			0.00	0.00	0.00				
I. LIABILITIES									
1) Accounts Payable		9500	0.00	0.00	0.00				
2) Due to Grantor Governments		9590	0.00	0.00	0.00				
3) Due to Other Funds		9610	0.00	0.00	0.00				
4) Current Loans		9640	0.00	0.00	0.00				
5) Unearned Revenue		9650	0.00	0.00	0.00				
6) TOTAL, LIABILITIES			0.00	0.00	0.00				
J. DEFERRED INFLOWS OF RESOURCES									
1) Deferred Inflows of Resources		9690	0.00	0.00	0.00				
2) TOTAL, DEFERRED INFLOWS			0.00	0.00	0.00				
K. FUND EQUITY									
Ending Fund Balance, June 30 (G10 + H2) - (I6 + J2)			0.00	0.00	0.00				
LCFF SOURCES									
Principal Apportionment									
State Aid - Current Year		8011	72,211,986.00	0.00	72,211,986.00	76,146,323.00	0.00	76,146,323.00	5.4%
Education Protection Account State Aid - Current Year		8012	20,512,752.00	0.00	20,512,752.00	22,399,339.00	0.00	22,399,339.00	9.2%
State Aid - Prior Years		8019	651,763.00	0.00	651,763.00	0.00	0.00	0.00	-100.0%
Tax Relief Subventions									
Homeowners' Exemptions		8021	162,742.00	0.00	162,742.00	162,742.00	0.00	162,742.00	0.0%
Timber Yield Tax		8022	0.00	0.00	0.00	0.00	0.00	0.00	0.0%
Other Subventions/In-Lieu Taxes		8029	0.00	0.00	0.00	0.00	0.00	0.00	0.0%
County & District Taxes									
Secured Roll Taxes		8041	46,651,015.00	0.00	46,651,015.00	46,651,015.00	0.00	46,651,015.00	0.0%
Unsecured Roll Taxes		8042	367,143.00	0.00	367,143.00	367,143.00	0.00	367,143.00	0.0%
Prior Years' Taxes		8043	1,961,143.00	0.00	1,961,143.00	1,961,143.00	0.00	1,961,143.00	0.0%
Supplemental Taxes		8044	633,242.00	0.00	633,242.00	633,242.00	0.00	633,242.00	0.0%
Education Revenue Augmentation Fund (ERAF)		8045	11,954,877.00	0.00	11,954,877.00	11,954,877.00	0.00	11,954,877.00	0.0%

Burbank Unified
Los Angeles County

Budget, July 1
General Fund
Unrestricted and Restricted
Expenditures by Object

19 64337 0000000
Form 01
H8B8FABHZR(2026-27)

Description	Resource Codes	Object Codes	2025-26 Estimated Actuals			2026-27 Budget			% Diff Column C & F
			Unrestricted (A)	Restricted (B)	Total Fund col. A + B (C)	Unrestricted (D)	Restricted (E)	Total Fund col. D + E (F)	
Community Redevelopment Funds (SB 617/699/1992)		8047	15,893,615.00	0.00	15,893,615.00	15,893,615.00	0.00	15,893,615.00	0.0%
Penalties and Interest from Delinquent Taxes		8048	0.00	0.00	0.00	0.00	0.00	0.00	0.0%
Miscellaneous Funds (EC 41604)									
Royalties and Bonuses		8081	0.00	0.00	0.00	0.00	0.00	0.00	0.0%
Other In-Lieu Taxes		8082	0.00	0.00	0.00	0.00	0.00	0.00	0.0%
Less: Non-LCFF (50%) Adjustment		8089	0.00	0.00	0.00	0.00	0.00	0.00	0.0%
Subtotal, LCFF Sources			171,000,278.00	0.00	171,000,278.00	176,169,439.00	0.00	176,169,439.00	3.0%
LCFF Transfers									
Unrestricted LCFF Transfers - Current Year	0000	8091	0.00		0.00	0.00		0.00	0.0%
All Other LCFF Transfers - Current Year	All Other	8091	0.00	0.00	0.00	0.00	0.00	0.00	0.0%
Transfers to Charter Schools in Lieu of Property Taxes		8096	0.00	0.00	0.00	0.00	0.00	0.00	0.0%
Property Taxes Transfers		8097	0.00	0.00	0.00	0.00	0.00	0.00	0.0%
LCFF Transfers - Prior Years		8099	0.00	0.00	0.00	0.00	0.00	0.00	0.0%
TOTAL, LCFF SOURCES			171,000,278.00	0.00	171,000,278.00	176,169,439.00	0.00	176,169,439.00	3.0%
FEDERAL REVENUE									
Maintenance and Operations		8110	0.00	0.00	0.00	0.00	0.00	0.00	0.0%
Special Education Entitlement		8181	0.00	3,220,411.00	3,220,411.00	0.00	3,220,411.00	3,220,411.00	0.0%
Special Education Discretionary Grants		8182	0.00	214,254.00	214,254.00	0.00	214,254.00	214,254.00	0.0%
Child Nutrition Programs		8220	0.00	0.00	0.00	0.00	0.00	0.00	0.0%
Donated Food Commodities		8221	0.00	0.00	0.00	0.00	0.00	0.00	0.0%
Forest Reserve Funds		8260	0.00	0.00	0.00	0.00	0.00	0.00	0.0%
Flood Control Funds		8270	0.00	0.00	0.00	0.00	0.00	0.00	0.0%
Wildlife Reserve Funds		8280	0.00	0.00	0.00	0.00	0.00	0.00	0.0%
FEMA		8281	0.00	245,235.00	245,235.00	0.00	245,235.00	245,235.00	0.0%
Interagency Contracts Between LEAs		8285	0.00	0.00	0.00	0.00	0.00	0.00	0.0%
Pass-Through Revenues from Federal Sources		8287	0.00	0.00	0.00	0.00	0.00	0.00	0.0%
Title I, Part A, Basic	3010	8290		1,869,714.00	1,869,714.00		2,414,114.00	2,414,114.00	29.1%
Title I, Part D, Local Delinquent Programs	3025	8290		0.00	0.00		0.00	0.00	0.0%
Title II, Part A, Supporting Effective Instruction	4035	8290		317,803.00	317,803.00		331,517.00	331,517.00	4.3%
Title III, Immigrant Student Program	4201	8290		105,741.00	105,741.00		6,342.00	6,342.00	-94.0%
Title III, English Learner Program	4203	8290		244,145.00	244,145.00		223,362.00	223,362.00	-8.5%
Public Charter Schools Grant Program (PCSGP)	4610	8290		0.00	0.00		0.00	0.00	0.0%

Description	Resource Codes	Object Codes	2025-26 Estimated Actuals			2026-27 Budget			% Diff Column C & F
			Unrestricted (A)	Restricted (B)	Total Fund col. A + B (C)	Unrestricted (D)	Restricted (E)	Total Fund col. D + E (F)	
Other Every Student Succeeds Act	3040, 3060, 3061, 3110, 3150, 3155, 3182, 4037, 4123, 4124, 4126, 4127, 5630	8290		24,151.00	24,151.00		22,737.00	22,737.00	-5.9%
Career and Technical Education	3500-3599	8290		86,175.00	86,175.00		84,851.00	84,851.00	-1.5%
All Other Federal Revenue	All Other	8290	0.00	1,848,026.00	1,848,026.00	0.00	1,872,660.00	1,872,660.00	1.3%
TOTAL, FEDERAL REVENUE			0.00	8,175,655.00	8,175,655.00	0.00	8,635,483.00	8,635,483.00	5.6%
OTHER STATE REVENUE									
Other State Apportionments									
Special Education Master Plan									
Current Year	6500	8311		12,438,309.00	12,438,309.00		17,413,633.00	17,413,633.00	40.0%
Prior Years	6500	8319		0.00	0.00		0.00	0.00	0.0%
All Other State Apportionments - Current Year	All Other	8311	0.00	0.00	0.00	0.00	0.00	0.00	0.0%
All Other State Apportionments - Prior Years	All Other	8319	0.00	0.00	0.00	0.00	0.00	0.00	0.0%
Child Nutrition Programs		8520	0.00	0.00	0.00	0.00	0.00	0.00	0.0%
Mandated Costs Reimbursements		8550	699,592.00	0.00	699,592.00	699,592.00	0.00	699,592.00	0.0%
Lottery - Unrestricted and Instructional Materials		8560	2,591,550.00	1,118,458.00	3,710,008.00	2,560,676.00	1,105,134.00	3,665,810.00	-1.2%
Tax Relief Subventions									
Restricted Levies - Other									
Homeowners' Exemptions		8575	0.00	0.00	0.00	0.00	0.00	0.00	0.0%
Other Subventions/In-Lieu Taxes		8576	0.00	0.00	0.00	0.00	0.00	0.00	0.0%
Pass-Through Revenues from									
State Sources		8587	0.00	0.00	0.00	0.00	0.00	0.00	0.0%
Expanded Learning Opportunities Program (ELO-P)	2600	8590		3,859,529.00	3,859,529.00		3,859,529.00	3,859,529.00	0.0%
After School Education and Safety (ASES)	6010	8590		181,440.00	181,440.00		449,350.00	449,350.00	147.7%
Charter School Facility Grant	6030	8590		0.00	0.00		0.00	0.00	0.0%
Drug/Alcohol/Tobacco Funds	6650, 6690, 6695	8590		0.00	0.00		0.00	0.00	0.0%
California Clean Energy Jobs Act	6230	8590		0.00	0.00		0.00	0.00	0.0%
Career Technical Education Incentive Grant Program	6387	8590		572,826.00	572,826.00		533,309.00	533,309.00	-6.9%
Arts and Music in Schools (Prop 28)	6770	8590		2,154,237.00	2,154,237.00		2,154,237.00	2,154,237.00	0.0%
American Indian Early Childhood Education	7210	8590		0.00	0.00		0.00	0.00	0.0%
Specialized Secondary	7370	8590		0.00	0.00		0.00	0.00	0.0%
All Other State Revenue	All Other	8590	2,816,907.00	7,473,710.00	10,290,617.00	2,816,907.00	7,498,316.00	10,315,223.00	0.2%
TOTAL, OTHER STATE REVENUE			6,108,049.00	27,798,509.00	33,906,558.00	6,077,175.00	33,013,508.00	39,090,683.00	15.3%

Description	Resource Codes	Object Codes	2025-26 Estimated Actuals			2026-27 Budget			% Diff Column C & F
			Unrestricted (A)	Restricted (B)	Total Fund col. A + B (C)	Unrestricted (D)	Restricted (E)	Total Fund col. D + E (F)	
OTHER LOCAL REVENUE									
Other Local Revenue									
County and District Taxes									
Other Restricted Levies									
Secured Roll		8615	0.00	0.00	0.00	0.00	0.00	0.00	0.0%
Unsecured Roll		8616	0.00	0.00	0.00	0.00	0.00	0.00	0.0%
Prior Years' Taxes		8617	0.00	0.00	0.00	0.00	0.00	0.00	0.0%
Supplemental Taxes		8618	0.00	0.00	0.00	0.00	0.00	0.00	0.0%
Non-Ad Valorem Taxes									
Parcel Taxes		8621	0.00	0.00	0.00	0.00	0.00	0.00	0.0%
Other		8622	0.00	0.00	0.00	0.00	0.00	0.00	0.0%
Community Redevelopment Funds Not Subject to LCFF Deduction		8625	0.00	2,307,378.00	2,307,378.00	0.00	2,307,378.00	2,307,378.00	0.0%
Penalties and Interest from Delinquent Non-LCFF Taxes		8629	0.00	0.00	0.00	0.00	0.00	0.00	0.0%
Sales									
Sale of Equipment/Supplies		8631	0.00	0.00	0.00	0.00	0.00	0.00	0.0%
Sale of Publications		8632	0.00	0.00	0.00	0.00	0.00	0.00	0.0%
Food Service Sales		8634	0.00	0.00	0.00	0.00	0.00	0.00	0.0%
All Other Sales		8639	0.00	0.00	0.00	0.00	0.00	0.00	0.0%
Leases and Rentals		8650	0.00	432,409.00	432,409.00	0.00	432,409.00	432,409.00	0.0%
Interest		8660	774,840.00	0.00	774,840.00	774,840.00	0.00	774,840.00	0.0%
Net Increase (Decrease) in the Fair Value of Investments		8662	0.00	0.00	0.00	0.00	0.00	0.00	0.0%
Fees and Contracts									
Adult Education Fees		8671	0.00	0.00	0.00	0.00	0.00	0.00	0.0%
Non-Resident Students		8672	0.00	0.00	0.00	0.00	0.00	0.00	0.0%
Transportation Fees From Individuals		8675	0.00	0.00	0.00	0.00	0.00	0.00	0.0%
Interagency Services		8677	0.00	87,385.00	87,385.00	0.00	87,385.00	87,385.00	0.0%
Mitigation/Developer Fees		8681	0.00	0.00	0.00	0.00	0.00	0.00	0.0%
All Other Fees and Contracts		8689	0.00	0.00	0.00	0.00	0.00	0.00	0.0%
Other Local Revenue									
Plus: Miscellaneous Funds Non-LCFF (50 Percent) Adjustment		8691	0.00	0.00	0.00	0.00	0.00	0.00	0.0%
Pass-Through Revenue from Local Sources		8697	0.00	0.00	0.00	0.00	0.00	0.00	0.0%
All Other Local Revenue		8699	662,599.00	2,545,217.00	3,207,816.00	262,599.00	2,657,672.00	2,920,271.00	-9.0%

Description	Resource Codes	Object Codes	2025-26 Estimated Actuals			2026-27 Budget			% Diff Column C & F
			Unrestricted (A)	Restricted (B)	Total Fund col. A + B (C)	Unrestricted (D)	Restricted (E)	Total Fund col. D + E (F)	
Tuition		8710	0.00	1,443,797.00	1,443,797.00	0.00	1,443,797.00	1,443,797.00	0.0%
All Other Transfers In		8781-8783	0.00	0.00	0.00	0.00	0.00	0.00	0.0%
Transfers of Apportionments									
Special Education SELPA Transfers									
From Districts or Charter Schools	6500	8791		0.00	0.00		0.00	0.00	0.0%
From County Offices	6500	8792		0.00	0.00		0.00	0.00	0.0%
From JPAs	6500	8793		0.00	0.00		0.00	0.00	0.0%
Other Transfers of Apportionments									
From Districts or Charter Schools	All Other	8791	0.00	0.00	0.00	0.00	0.00	0.00	0.0%
From County Offices	All Other	8792	0.00	0.00	0.00	0.00	0.00	0.00	0.0%
From JPAs	All Other	8793	0.00	0.00	0.00	0.00	0.00	0.00	0.0%
All Other Transfers In from All Others		8799	0.00	0.00	0.00	0.00	0.00	0.00	0.0%
TOTAL, OTHER LOCAL REVENUE			1,437,439.00	6,816,186.00	8,253,625.00	1,037,439.00	6,928,641.00	7,966,080.00	-3.5%
TOTAL, REVENUES			178,545,766.00	42,790,350.00	221,336,116.00	183,284,053.00	48,577,632.00	231,861,685.00	4.8%
CERTIFICATED SALARIES									
Certificated Teachers' Salaries		1100	53,374,621.00	14,529,592.00	67,904,213.00	55,508,640.78	14,222,867.00	69,731,507.78	2.7%
Certificated Pupil Support Salaries		1200	4,544,792.00	762,849.00	5,307,641.00	4,828,839.00	804,031.00	5,632,870.00	6.1%
Certificated Supervisors' and Administrators' Salaries		1300	6,770,511.00	750,972.00	7,521,483.00	6,461,701.18	1,339,313.06	7,801,014.24	3.7%
Other Certificated Salaries		1900	2,032,212.00	1,317,097.00	3,349,309.00	1,957,476.00	1,221,547.00	3,179,023.00	-5.1%
TOTAL, CERTIFICATED SALARIES			66,722,136.00	17,360,510.00	84,082,646.00	68,756,656.96	17,587,758.06	86,344,415.02	2.7%
CLASSIFIED SALARIES									
Classified Instructional Salaries		2100	2,214,784.00	11,633,843.00	13,848,627.00	2,184,560.00	12,270,344.00	14,454,904.00	4.4%
Classified Support Salaries		2200	8,028,729.00	5,149,372.00	13,178,101.00	7,692,510.00	5,030,078.00	12,722,588.00	-3.5%
Classified Supervisors' and Administrators' Salaries		2300	1,574,563.00	469,963.00	2,044,526.00	1,566,473.98	478,513.00	2,044,986.98	0.0%
Clerical, Technical and Office Salaries		2400	7,485,285.00	786,390.00	8,271,675.00	7,962,550.00	772,333.00	8,734,883.00	5.6%
Other Classified Salaries		2900	1,450,858.00	539,137.00	1,989,995.00	1,489,003.00	351,408.00	1,840,411.00	-7.5%
TOTAL, CLASSIFIED SALARIES			20,754,219.00	18,578,705.00	39,332,924.00	20,895,096.98	18,902,676.00	39,797,772.98	1.2%
EMPLOYEE BENEFITS									
STRS		3101-3102	11,955,615.00	2,759,625.00	14,715,240.00	12,550,975.66	2,820,293.95	15,371,269.61	4.5%
PERS		3201-3202	5,503,109.00	4,817,559.00	10,320,668.00	5,493,034.71	4,498,908.00	9,991,942.71	-3.2%
OASDI/Medicare/Alternative		3301-3302	2,636,451.00	1,650,682.00	4,287,133.00	2,577,874.42	1,538,024.51	4,115,898.93	-4.0%
Health and Welfare Benefits		3401-3402	12,499,867.00	4,791,183.98	17,291,050.98	12,769,212.45	5,185,405.35	17,954,617.80	3.8%
Unemployment Insurance		3501-3502	44,711.00	16,991.00	61,702.00	56,481.06	18,681.30	75,162.36	21.8%
Workers' Compensation		3601-3602	2,202,166.00	830,027.00	3,032,193.00	2,120,090.69	801,064.31	2,921,155.00	-3.7%

Description	Resource Codes	Object Codes	2025-26 Estimated Actuals			2026-27 Budget			% Diff Column C & F
			Unrestricted (A)	Restricted (B)	Total Fund col. A + B (C)	Unrestricted (D)	Restricted (E)	Total Fund col. D + E (F)	
OPEB, Allocated		3701-3702	1,443,092.00	98,998.00	1,542,090.00	1,240,935.40	445,455.78	1,686,391.18	9.4%
OPEB, Active Employees		3751-3752	0.00	0.00	0.00	0.00	0.00	0.00	0.0%
Other Employee Benefits		3901-3902	0.00	0.00	0.00	0.00	0.00	0.00	0.0%
TOTAL, EMPLOYEE BENEFITS			36,285,011.00	14,965,065.98	51,250,076.98	36,808,604.39	15,307,833.20	52,116,437.59	1.7%
BOOKS AND SUPPLIES									
Approved Textbooks and Core Curricula Materials		4100	0.00	1,491,105.00	1,491,105.00	0.00	1,491,105.00	1,491,105.00	0.0%
Books and Other Reference Materials		4200	8,584.00	179,126.00	187,710.00	8,584.00	95,198.00	103,782.00	-44.7%
Materials and Supplies		4300	1,596,139.00	2,479,405.00	4,075,544.00	1,760,508.00	3,970,490.00	5,730,998.00	40.6%
Noncapitalized Equipment		4400	69,707.00	609,204.00	678,911.00	69,707.00	581,183.00	650,890.00	-4.1%
Food		4700	0.00	34,047.00	34,047.00	0.00	34,047.00	34,047.00	0.0%
TOTAL, BOOKS AND SUPPLIES			1,674,430.00	4,792,887.00	6,467,317.00	1,838,799.00	6,172,023.00	8,010,822.00	23.9%
SERVICES AND OTHER OPERATING EXPENDITURES									
Subagreements for Services		5100	0.00	0.00	0.00	0.00	0.00	0.00	0.0%
Travel and Conferences		5200	61,880.00	69,167.00	131,047.00	82,816.00	69,079.00	151,895.00	15.9%
Dues and Memberships		5300	55,071.00	3,547.00	58,618.00	56,767.00	3,657.00	60,424.00	3.1%
Insurance		5400 - 5499	2,918,964.00	0.00	2,918,964.00	3,008,868.00	0.00	3,008,868.00	3.1%
Operations and Housekeeping Services		5500	3,559,508.00	22,291.00	3,581,799.00	3,669,142.00	22,977.00	3,692,119.00	3.1%
Rentals, Leases, Repairs, and Noncapitalized Improvements		5600	863,178.00	599,837.00	1,463,015.00	889,763.00	617,124.00	1,506,887.00	3.0%
Transfers of Direct Costs		5710	(130,759.42)	130,759.42	0.00	(264,722.00)	264,722.00	0.00	0.0%
Transfers of Direct Costs - Interfund		5750	(9,619.00)	0.00	(9,619.00)	0.00	0.00	0.00	-100.0%
Professional/Consulting Services and Operating Expenditures		5800 - 5899	10,953,254.00	24,943,426.05	35,896,680.05	10,247,437.00	24,915,531.00	35,162,968.00	-2.0%
Communications		5900	323,943.00	7,677.00	331,620.00	334,250.00	7,912.00	342,162.00	3.2%
TOTAL, SERVICES AND OTHER OPERATING EXPENDITURES			18,595,419.58	25,776,704.47	44,372,124.05	18,024,321.00	25,901,002.00	43,925,323.00	-1.0%
CAPITAL OUTLAY									
Land		6100	0.00	0.00	0.00	0.00	0.00	0.00	0.0%
Land Improvements		6170	0.00	0.00	0.00	0.00	0.00	0.00	0.0%
Buildings and Improvements of Buildings		6200	0.00	99,833.00	99,833.00	0.00	65,000.00	65,000.00	-34.9%
Books and Media for New School Libraries or Major Expansion of School Libraries		6300	0.00	0.00	0.00	0.00	0.00	0.00	0.0%
Equipment		6400	36,414.00	377,333.00	413,747.00	16,000.00	0.00	16,000.00	-96.1%
Equipment Replacement		6500	1,088,578.00	0.00	1,088,578.00	0.00	0.00	0.00	-100.0%
Lease Assets		6600	0.00	0.00	0.00	0.00	0.00	0.00	0.0%
Subscription Assets		6700	0.00	0.00	0.00	0.00	0.00	0.00	0.0%

Description	Resource Codes	Object Codes	2025-26 Estimated Actuals			2026-27 Budget			% Diff Column C & F
			Unrestricted (A)	Restricted (B)	Total Fund col. A + B (C)	Unrestricted (D)	Restricted (E)	Total Fund col. D + E (F)	
TOTAL, CAPITAL OUTLAY			1,124,992.00	477,166.00	1,602,158.00	16,000.00	65,000.00	81,000.00	-94.9%
OTHER OUTGO (excluding Transfers of Indirect Costs)									
Tuition									
Tuition for Instruction Under Interdistrict									
Attendance Agreements		7110	0.00	0.00	0.00	0.00	0.00	0.00	0.0%
State Special Schools		7130	7,548.00	0.00	7,548.00	7,548.00	0.00	7,548.00	0.0%
Tuition, Excess Costs, and/or Deficit Payments									
Payments to Districts or Charter Schools		7141	0.00	1,304,828.00	1,304,828.00	0.00	1,304,828.00	1,304,828.00	0.0%
Payments to County Offices		7142	236,517.00	0.00	236,517.00	236,517.00	0.00	236,517.00	0.0%
Payments to JPAs		7143	0.00	0.00	0.00	0.00	0.00	0.00	0.0%
Transfers of Pass-Through Revenues									
To Districts or Charter Schools		7211	0.00	0.00	0.00	0.00	0.00	0.00	0.0%
To County Offices		7212	0.00	0.00	0.00	0.00	0.00	0.00	0.0%
To JPAs		7213	0.00	0.00	0.00	0.00	0.00	0.00	0.0%
Special Education SELPA Transfers of Apportionments									
To Districts or Charter Schools	6500	7221		0.00	0.00		0.00	0.00	0.0%
To County Offices	6500	7222		0.00	0.00		0.00	0.00	0.0%
To JPAs	6500	7223		0.00	0.00		0.00	0.00	0.0%
Other Transfers of Apportionments	All Other	7221-7223	0.00	0.00	0.00	0.00	0.00	0.00	0.0%
All Other Transfers		7281-7283	0.00	0.00	0.00	0.00	0.00	0.00	0.0%
All Other Transfers Out to All Others		7299	0.00	0.00	0.00	0.00	0.00	0.00	0.0%
Debt Service									
Debt Service - Interest		7438	486,634.00	282.00	486,916.00	0.00	282.00	282.00	-99.9%
Other Debt Service - Principal		7439	885,843.00	18,061.00	903,904.00	0.00	18,061.00	18,061.00	-98.0%
TOTAL, OTHER OUTGO (excluding Transfers of Indirect Costs)			1,616,542.00	1,323,171.00	2,939,713.00	244,065.00	1,323,171.00	1,567,236.00	-46.7%
OTHER OUTGO - TRANSFERS OF INDIRECT COSTS									
Transfers of Indirect Costs		7310	(894,169.00)	894,169.00	0.00	(1,320,650.00)	1,320,650.00	0.00	0.0%
Transfers of Indirect Costs - Interfund		7350	(762,431.00)	0.00	(762,431.00)	(1,087,763.00)	0.00	(1,087,763.00)	42.7%
TOTAL, OTHER OUTGO - TRANSFERS OF INDIRECT COSTS			(1,656,600.00)	894,169.00	(762,431.00)	(2,408,413.00)	1,320,650.00	(1,087,763.00)	42.7%
TOTAL, EXPENDITURES			145,116,149.58	84,168,378.45	229,284,528.03	144,175,130.33	86,580,113.26	230,755,243.59	0.6%
INTERFUND TRANSFERS									
INTERFUND TRANSFERS IN									
From: Special Reserve Fund		8912	0.00	0.00	0.00	0.00	0.00	0.00	0.0%

Description	Resource Codes	Object Codes	2025-26 Estimated Actuals			2026-27 Budget			% Diff Column C & F
			Unrestricted (A)	Restricted (B)	Total Fund col. A + B (C)	Unrestricted (D)	Restricted (E)	Total Fund col. D + E (F)	
From: Bond Interest and Redemption Fund		8914	0.00	0.00	0.00	0.00	0.00	0.00	0.0%
Other Authorized Interfund Transfers In		8919	0.00	0.00	0.00	0.00	0.00	0.00	0.0%
(a) TOTAL, INTERFUND TRANSFERS IN			0.00	0.00	0.00	0.00	0.00	0.00	0.0%
INTERFUND TRANSFERS OUT									
To: Child Development Fund		7611	0.00	0.00	0.00	0.00	0.00	0.00	0.0%
To: Special Reserve Fund		7612	0.00	0.00	0.00	0.00	0.00	0.00	0.0%
To State School Building Fund/County School Facilities Fund		7613	0.00	0.00	0.00	0.00	0.00	0.00	0.0%
To: Cafeteria Fund		7616	0.00	0.00	0.00	0.00	0.00	0.00	0.0%
Other Authorized Interfund Transfers Out		7619	2,000,000.00	0.00	2,000,000.00	1,750,000.00	0.00	1,750,000.00	-12.5%
(b) TOTAL, INTERFUND TRANSFERS OUT			2,000,000.00	0.00	2,000,000.00	1,750,000.00	0.00	1,750,000.00	-12.5%
OTHER SOURCES/USES									
SOURCES									
State Apportionments									
Emergency Apportionments		8931	0.00	0.00	0.00	0.00	0.00	0.00	0.0%
Proceeds									
Proceeds from Disposal of Capital Assets		8953	0.00	0.00	0.00	0.00	0.00	0.00	0.0%
Other Sources									
Transfers from Funds of Lapsed/Reorganized LEAs		8965	0.00	0.00	0.00	0.00	0.00	0.00	0.0%
Long-Term Debt Proceeds									
Proceeds from Certificates of Participation		8971	0.00	0.00	0.00	0.00	0.00	0.00	0.0%
Proceeds from Leases		8972	0.00	0.00	0.00	0.00	0.00	0.00	0.0%
Proceeds from Lease Revenue Bonds		8973	0.00	0.00	0.00	0.00	0.00	0.00	0.0%
Proceeds from SBITAs		8974	0.00	0.00	0.00	0.00	0.00	0.00	0.0%
All Other Financing Sources		8979	0.00	0.00	0.00	0.00	0.00	0.00	0.0%
(c) TOTAL, SOURCES			0.00	0.00	0.00	0.00	0.00	0.00	0.0%
USES									
Transfers of Funds from Lapsed/Reorganized LEAs		7651	0.00	0.00	0.00	0.00	0.00	0.00	0.0%
All Other Financing Uses		7699	0.00	0.00	0.00	0.00	0.00	0.00	0.0%
(d) TOTAL, USES			0.00	0.00	0.00	0.00	0.00	0.00	0.0%
CONTRIBUTIONS									
Contributions from Unrestricted Revenues		8980	(45,627,547.00)	45,627,547.00	0.00	(41,109,278.00)	41,109,278.00	0.00	0.0%
Contributions from Restricted Revenues		8990	0.00	0.00	0.00	0.00	0.00	0.00	0.0%
(e) TOTAL, CONTRIBUTIONS			(45,627,547.00)	45,627,547.00	0.00	(41,109,278.00)	41,109,278.00	0.00	0.0%

Description	Resource Codes	Object Codes	2025-26 Estimated Actuals			2026-27 Budget			% Diff Column C & F
			Unrestricted (A)	Restricted (B)	Total Fund col. A + B (C)	Unrestricted (D)	Restricted (E)	Total Fund col. D + E (F)	
TOTAL, OTHER FINANCING SOURCES/USES (a- b + c - d + e)			(47,627,547.00)	45,627,547.00	(2,000,000.00)	(42,859,278.00)	41,109,278.00	(1,750,000.00)	-12.5%

Description	Function Codes	Object Codes	2025-26 Estimated Actuals Unrestricted (A)	2025-26 Estimated Actuals Restricted (B)	2025-26 Estimated Actuals Total Fund col. A + B (C)	2026-27 Budget Unrestricted (D)	2026-27 Budget Restricted (E)	2026-27 Budget Total Fund col. D + E (F)	% Diff Column C & F
A. REVENUES									
1) LCFF Sources		8010-8099	171,000,278.00	0.00	171,000,278.00	176,169,439.00	0.00	176,169,439.00	3.0%
2) Federal Revenue		8100-8299	0.00	8,175,655.00	8,175,655.00	0.00	8,635,483.00	8,635,483.00	5.6%
3) Other State Revenue		8300-8599	6,108,049.00	27,798,509.00	33,906,558.00	6,077,175.00	33,013,508.00	39,090,683.00	15.3%
4) Other Local Revenue		8600-8799	1,437,439.00	6,816,186.00	8,253,625.00	1,037,439.00	6,928,641.00	7,966,080.00	-3.5%
5) TOTAL, REVENUES			178,545,766.00	42,790,350.00	221,336,116.00	183,284,053.00	48,577,632.00	231,861,685.00	4.8%
B. EXPENDITURES (Objects 1000-7999)									
1) Instruction	1000-1999		79,948,774.58	63,498,081.45	143,446,856.03	81,691,850.67	65,423,081.19	147,114,931.86	2.6%
2) Instruction - Related Services	2000-2999		17,769,133.00	5,355,475.00	23,124,608.00	17,605,725.05	5,777,146.09	23,382,871.14	1.1%
3) Pupil Services	3000-3999		13,986,946.00	4,895,477.00	18,882,423.00	14,699,538.00	5,044,491.56	19,744,029.56	4.6%
4) Ancillary Services	4000-4999		1,274,933.00	505,453.00	1,780,386.00	1,659,331.28	424,390.00	2,083,721.28	17.0%
5) Community Services	5000-5999		904.00	149,054.00	149,958.00	0.00	174,795.00	174,795.00	16.6%
6) Enterprise	6000-6999		5,100.00	0.00	5,100.00	5,257.00	0.00	5,257.00	3.1%
7) General Administration	7000-7999		16,674,736.00	978,137.00	17,652,873.00	15,968,380.33	1,536,970.42	17,505,350.75	-0.8%
8) Plant Services	8000-8999		13,839,081.00	7,463,530.00	21,302,611.00	12,300,983.00	6,876,068.00	19,177,051.00	-10.0%
9) Other Outgo	9000-9999	Except 7600-7699	1,616,542.00	1,323,171.00	2,939,713.00	244,065.00	1,323,171.00	1,567,236.00	-46.7%
10) TOTAL, EXPENDITURES			145,116,149.58	84,168,378.45	229,284,528.03	144,175,130.33	86,580,113.26	230,755,243.59	0.6%
C. EXCESS (DEFICIENCY) OF REVENUES OVER EXPENDITURES BEFORE OTHER FINANCING SOURCES AND USES (A5 - B10)			33,429,616.42	(41,378,028.45)	(7,948,412.03)	39,108,922.67	(38,002,481.26)	1,106,441.41	-113.9%
D. OTHER FINANCING SOURCES/USES									
1) Interfund Transfers									
a) Transfers In		8900-8929	0.00	0.00	0.00	0.00	0.00	0.00	0.0%
b) Transfers Out		7600-7629	2,000,000.00	0.00	2,000,000.00	1,750,000.00	0.00	1,750,000.00	-12.5%
2) Other Sources/Uses									
a) Sources		8930-8979	0.00	0.00	0.00	0.00	0.00	0.00	0.0%
b) Uses		7630-7699	0.00	0.00	0.00	0.00	0.00	0.00	0.0%
3) Contributions		8980-8999	(45,627,547.00)	45,627,547.00	0.00	(41,109,278.00)	41,109,278.00	0.00	0.0%
4) TOTAL, OTHER FINANCING SOURCES/USES			(47,627,547.00)	45,627,547.00	(2,000,000.00)	(42,859,278.00)	41,109,278.00	(1,750,000.00)	-12.5%
E. NET INCREASE (DECREASE) IN FUND BALANCE (C + D4)			(14,197,930.58)	4,249,518.55	(9,948,412.03)	(3,750,355.33)	3,106,796.74	(643,558.59)	-93.5%
F. FUND BALANCE, RESERVES									
1) Beginning Fund Balance									
a) As of July 1 - Unaudited		9791	34,014,557.57	14,571,455.17	48,586,012.74	19,816,626.99	18,820,973.72	38,637,600.71	-20.5%

Burbank Unified
Los Angeles County

Budget, July 1
General Fund
Unrestricted and Restricted
Expenditures by Function

19 64337 0000000
Form 01
H8B8FABHZR(2026-27)

Description	Function Codes	Object Codes	2025-26 Estimated Actuals			2026-27 Budget			% Diff Column C & F
			Unrestricted (A)	Restricted (B)	Total Fund col. A + B (C)	Unrestricted (D)	Restricted (E)	Total Fund col. D + E (F)	
b) Audit Adjustments		9793	0.00	0.00	0.00	0.00	0.00	0.00	0.0%
c) As of July 1 - Audited (F1a + F1b)			34,014,557.57	14,571,455.17	48,586,012.74	19,816,626.99	18,820,973.72	38,637,600.71	-20.5%
d) Other Restatements		9795	0.00	0.00	0.00	0.00	0.00	0.00	0.0%
e) Adjusted Beginning Balance (F1c + F1d)			34,014,557.57	14,571,455.17	48,586,012.74	19,816,626.99	18,820,973.72	38,637,600.71	-20.5%
2) Ending Balance, June 30 (E + F1e)			19,816,626.99	18,820,973.72	38,637,600.71	16,066,271.66	21,927,770.46	37,994,042.12	-1.7%
Components of Ending Fund Balance									
a) Nonspendable									
Revolving Cash		9711	25,000.00	0.00	25,000.00	25,000.00	0.00	25,000.00	0.0%
Stores		9712	20,000.00	0.00	20,000.00	20,000.00	0.00	20,000.00	0.0%
Prepaid Items		9713	0.00	0.00	0.00	0.00	0.00	0.00	0.0%
All Others		9719	0.00	0.00	0.00	0.00	0.00	0.00	0.0%
b) Restricted		9740	0.00	18,820,974.98	18,820,974.98	0.00	21,927,771.72	21,927,771.72	16.5%
c) Committed									
Stabilization Arrangements		9750	0.00	0.00	0.00	0.00	0.00	0.00	0.0%
Other Commitments (by Resource/Object)		9760	0.00	0.00	0.00	0.00	0.00	0.00	0.0%
d) Assigned									
Other Assignments (by Resource/Object)		9780	12,833,086.99	0.00	12,833,086.99	9,046,111.66	0.00	9,046,111.66	-29.5%
e) Unassigned/Unappropriated									
Reserve for Economic Uncertainties		9789	6,938,540.00	0.00	6,938,540.00	6,975,160.00	0.00	6,975,160.00	0.5%
Unassigned/Unappropriated Amount		9790	0.00	(1.26)	(1.26)	0.00	(1.26)	(1.26)	0.0%

Resource	Description	2025-26 Estimated Actuals	2026-27 Budget
2600	Expanded Learning Opportunities Program	2,030,504.75	1,940,488.48
5650	FEMA Public Assistance Funds	200,972.03	446,207.03
6019	Student Support and Professional Development Discretionary Block Grant	4,192,475.00	7,228,193.01
6300	Lottery: Instructional Materials	1,109,410.80	693,507.80
6547	Special Education Early Intervention Preschool Grant	633,703.00	1,267,406.00
6770	Arts and Music in Schools (AMS)-Funding Guarantee and Accountability Act (Prop 28)	2,059,289.84	1,157,339.84
7311	Classified School Employee Professional Development Block Grant	87,699.08	87,699.08
7388	SB 117 COVID-19 LEA Response Funds	.76	.76
7435	Learning Recovery Emergency Block Grant	544,547.00	1,100,983.00
7510	Low-Performing Students Block Grant	4.77	4.77
7810	Other Restricted State	188,520.00	188,520.00
8150	Ongoing & Major Maintenance Account (RMA: Education Code Section 17070.75)	470,645.80	468,446.80
9010	Other Restricted Local	7,303,202.15	7,348,975.15
Total, Restricted Balance		18,820,974.98	21,927,771.72

Provide methodology and assumptions used to estimate ADA, enrollment, revenues, expenditures, reserves and fund balance, and multiyear commitments (including cost-of-living adjustments).

Deviations from the standards must be explained and may affect the approval of the budget.

CRITERIA AND STANDARDS

1. CRITERION: Average Daily Attendance

STANDARD: Projected funded average daily attendance (ADA) has not been overestimated in 1) the first prior fiscal year OR in 2) two or more of the previous three fiscal years by more than the following percentage levels:

Percentage Level	District ADA
3.0%	0 to 300
2.0%	301 to 1,000
1.0%	1,001 and over

District ADA (Form A, Estimated P-2 ADA column, lines A4 and C4):	12,893
District's ADA Standard Percentage Level:	**1.0%**

1A. Calculating the District's ADA Variances

DATA ENTRY: For the Third, Second, and First Prior Years, enter Estimated Funded ADA in the Original Budget Funded ADA column; enter district regular ADA and charter school ADA corresponding to financial data reported in the General Fund, only, for the Third, Second, and First Prior Years. All other data are extracted.

Fiscal Year	Original Budget Funded ADA (Form A, Lines A4 and C4)	Estimated/Unaudited Actuals Funded ADA (Form A, Lines A4 and C4)	ADA Variance Level (If Budget is greater than Actuals, else N/A)	Status
Third Prior Year (2023-24)				
District Regular	14,021	13,974		
Charter School	0			
Total ADA	**14,021**	**13,974**	**0.3%**	**Met**
Second Prior Year (2024-25)				
District Regular	13,595	13,555		
Charter School	0			
Total ADA	**13,595**	**13,555**	**0.3%**	**Met**
First Prior Year (2025-26)				
District Regular	13,441	13,426		
Charter School	0	0		
Total ADA	**13,441**	**13,426**	**0.1%**	**Met**
Budget Year (2026-27)				
District Regular	13,302			
Charter School	0			
Total ADA	**13,302**			

1B. Comparison of District ADA to the Standard

DATA ENTRY: Enter an explanation if the standard is not met.

1a. STANDARD MET - Funded ADA has not been overestimated by more than the standard percentage level for the first prior year.

Explanation:
(required if NOT met)

1b. STANDARD MET - Funded ADA has not been overestimated by more than the standard percentage level for two or more of the previous three years.

Explanation:
(required if NOT met)

2. CRITERION: Enrollment

STANDARD: Projected enrollment has not been overestimated in 1) the first prior fiscal year OR in 2) two or more of the previous three fiscal years by more than the following percentage levels:

Percentage Level	District ADA
3.0%	0 to 300
2.0%	301 to 1,000
1.0%	1,001 and over

District ADA (Form A, Estimated P-2 ADA column, lines A4 and C4): 12,893

District's Enrollment Standard Percentage Level: 1.0%

2A. Calculating the District's Enrollment Variances

DATA ENTRY: Enter data in the Enrollment, Budget, column for all fiscal years and in the Enrollment, CALPADS Actual column for the First Prior Year; all other data are extracted or calculated. CALPADS Actual enrollment data preloaded in the District Regular lines will include both District Regular and Charter School enrollment. Districts will need to adjust the District Regular enrollment lines and the Charter School enrollment lines accordingly. Enter district regular enrollment and charter school enrollment corresponding to financial data reported in the General Fund, only, for all fiscal years.

Fiscal Year	Enrollment Budget	Enrollment CALPADS Actual	Enrollment Variance Level (If Budget is greater than Actual, else N/A)	Status
Third Prior Year (2023-24)				
District Regular	14,250	14,240		
Charter School	0			
Total Enrollment	**14,250**	**14,240**	**0.1%**	**Met**
Second Prior Year (2024-25)				
District Regular	14,185	14,168		
Charter School	0			
Total Enrollment	**14,185**	**14,168**	**0.1%**	**Met**
First Prior Year (2025-26)				
District Regular	13,836	13,836		
Charter School	0			
Total Enrollment	**13,836**	**13,836**	**0.0%**	**Met**
Budget Year (2026-27)				
District Regular	13,670			
Charter School	0			
Total Enrollment	**13,670**			

2B. Comparison of District Enrollment to the Standard

DATA ENTRY: Enter an explanation if the standard is not met.

1a. STANDARD MET - Enrollment has not been overestimated by more than the standard percentage level for the first prior year.

Explanation:
(required if NOT met)

1b. STANDARD MET - Enrollment has not been overestimated by more than the standard percentage level for two or more of the previous three years.

Explanation:
(required if NOT met)

3. CRITERION: ADA to Enrollment

STANDARD: Projected second period (P-2) average daily attendance (ADA) to enrollment ratio for any of the budget year or two subsequent fiscal years has not increased from the historical average ratio from the three prior fiscal years by more than one half of one percent (0.5%).

3A. Calculating the District's ADA to Enrollment Standard

DATA ENTRY: All data are extracted or calculated. Data should reflect district regular and charter school ADA/enrollment corresponding to financial data reported in the General Fund, only, for all fiscal years.

Fiscal Year	P-2 ADA Estimated/Unaudited Actuals (Form A, Lines A4 and C4)	Enrollment CALPADS Actual (Criterion 2, Item 2A)	Historical Ratio of ADA to Enrollment
Third Prior Year (2023-24)			
District Regular	13,456	14,240	
Charter School		0	
Total ADA/Enrollment	**13,456**	**14,240**	**94.5%**
Second Prior Year (2024-25)			
District Regular	13,501	14,168	
Charter School	0		
Total ADA/Enrollment	**13,501**	**14,168**	**95.3%**
First Prior Year (2025-26)			
District Regular	13,049	13,836	
Charter School			
Total ADA/Enrollment	**13,049**	**13,836**	**94.3%**
		Historical Average Ratio:	94.7%
		District's ADA to Enrollment Standard (historical average ratio plus 0.5%):	**95.2%**

3B. Calculating the District's Projected Ratio of ADA to Enrollment

DATA ENTRY: Enter data in the Estimated P-2 ADA column for the two subsequent years. Enter data in the Enrollment column for the two subsequent years. Data should reflect district regular and charter school ADA/enrollment corresponding to financial data reported in the General Fund only, for all fiscal years. All other data are extracted or calculated.

Fiscal Year	Estimated P-2 ADA Budget (Form A, Lines A4 and C4)	Enrollment Budget/Projected (Criterion 2, Item 2A)	Ratio of ADA to Enrollment	Status
Budget Year (2026-27)				
District Regular	12,893	13,670		
Charter School	0	0		
Total ADA/Enrollment	**12,893**	**13,670**	**94.3%**	**Met**
1st Subsequent Year (2027-28)				
District Regular	12,754	13,506		
Charter School	0	0		
Total ADA/Enrollment	**12,754**	**13,506**	**94.4%**	**Met**
2nd Subsequent Year (2028-29)				
District Regular	12,601	13,344		
Charter School	0	0		
Total ADA/Enrollment	**12,601**	**13,344**	**94.4%**	**Met**

3C. Comparison of District ADA to Enrollment Ratio to the Standard

DATA ENTRY: Enter an explanation if the standard is not met.

1a. STANDARD MET - Projected P-2 ADA to enrollment ratio has not exceeded the standard for the budget and two subsequent fiscal years.

Explanation:
(required if NOT met)

4. CRITERION: LCFF Revenue

STANDARD: Projected local control funding formula (LCFF) revenue for any of the budget year or two subsequent fiscal years has not changed from the prior fiscal year by more than the change in population, plus the district's cost-of-living adjustment (COLA), plus or minus one percent.

For basic aid districts, projected LCFF revenue has not changed from the prior fiscal year by more than the percent change in property tax revenues plus or minus one percent.

For districts funded by necessary small school formulas, projected LCFF revenue has not changed from the prior fiscal year amount by more than the district's COLA, plus or minus one percent.

4A. District's LCFF Revenue Standard

Indicate which standard applies:

LCFF Revenue

Basic Aid

Necessary Small School

The District must select which LCFF revenue standard applies.

LCFF Revenue Standard selected: LCFF Revenue

4A1. Calculating the District's LCFF Revenue Standard

DATA ENTRY: Enter data in Step 1a for the two subsequent fiscal years. All other data is extracted or calculated. Enter data for Steps 2a through 2b1. All other data is calculated.

Projected LCFF Revenue

		Prior Year (2025-26)	Budget Year (2026-27)	1st Subsequent Year (2027-28)	2nd Subsequent Year (2028-29)
Step 1 - Change in Population					
a.	ADA (Funded) (Form A, lines A6 and C4)	13,440.58	13,316.76	13,132.96	12,908.62
b.	Prior Year ADA (Funded)		13,440.58	13,316.76	13,132.96
c.	Difference (Step 1a minus Step 1b)		(123.82)	(183.80)	(224.34)
d.	Percent Change Due to Population (Step 1c divided by Step 1b)		(.92%)	(1.38%)	(1.71%)
Step 2 - Change in Funding Level					
a.	Prior Year LCFF Funding		13,440.58	13,316.76	13,132.96
b1.	COLA percentage		4.31%	3.30%	3.09%
b2.	COLA amount (proxy for purposes of this criterion)		579.29	439.45	405.81
c.	Percent Change Due to Funding Level (Step 2b2 divided by Step 2a)		4.31%	3.30%	3.09%
Step 3 - Total Change in Population and Funding Level (Step 1d plus Step 2c)			3.39%	1.92%	1.38%
	LCFF Revenue Standard (Step 3, plus/minus 1%):		**2.39% to 4.39%**	**0.92% to 2.92%**	**0.38% to 2.38%**

4A2. Alternate LCFF Revenue Standard - Basic Aid

DATA ENTRY: If applicable to your district, input data in the 1st and 2nd Subsequent Year columns for projected local property taxes; all other data are extracted or calculated.

Basic Aid District Projected LCFF Revenue

	Prior Year (2025-26)	Budget Year (2026-27)	1st Subsequent Year (2027-28)	2nd Subsequent Year (2028-29)
Projected Local Property Taxes (Form 01, Objects 8021 - 8089)	77,623,777.00	77,623,777.00	77,623,777.00	77,623,777.00
Percent Change from Previous Year		**N/A**	**N/A**	**N/A**
Basic Aid Standard (percent change from previous year, plus/minus 1%):		**N/A**	**N/A**	**N/A**

4A3. Alternate LCFF Revenue Standard - Necessary Small School

DATA ENTRY: All data are extracted or calculated.

Necessary Small School District Projected LCFF Revenue

	Budget Year (2026-27)	1st Subsequent Year (2027-28)	2nd Subsequent Year (2028-29)
Necessary Small School Standard (COLA Step 2c, plus/minus 1%):	**N/A**	**N/A**	**N/A**

4B. Calculating the District's Projected Change in LCFF Revenue

DATA ENTRY: Enter data in the 1st and 2nd Subsequent Year columns for LCFF Revenue; all other data are extracted or calculated.

	Prior Year (2025-26)	Budget Year (2026-27)	1st Subsequent Year (2027-28)	2nd Subsequent Year (2028-29)
LCFF Revenue (Fund 01, Objects 8011, 8012, 8020-8089)	170,348,515.00	176,169,439.00	179,551,031.00	181,868,750.00
District's Projected Change in LCFF Revenue:		3.42%	1.92%	1.29%
LCFF Revenue Standard		**2.39% to 4.39%**	**0.92% to 2.92%**	**0.38% to 2.38%**
Status:		Met	Met	Met

4C. Comparison of District LCFF Revenue to the Standard

DATA ENTRY: Enter an explanation if the standard is not met.

1a. STANDARD MET - Projected change in LCFF revenue has met the standard for the budget and two subsequent fiscal years.

Explanation:
(required if NOT met)

LCFF grows with the 4.31% combined COLA on the entitlement, moderated by a ~0.9% funded-ADA decline (13,440.58 to 13,316.76).The variance vs the standard also reflects non-recurrence of the 25-26 EPA prior-year adjustment (Object 8019: $1,293,418 in EA to $0 in the budget year).

5. CRITERION: Salaries and Benefits

STANDARD: Projected ratio of total unrestricted salaries and benefits to total unrestricted general fund expenditures for any of the budget year or two subsequent fiscal years has not changed from the historical average ratio from the three prior fiscal years by more than the greater of three percent or the district's required reserves percentage.

5A. Calculating the District's Historical Average Ratio of Unrestricted Salaries and Benefits to Total Unrestricted General Fund Expenditures

DATA ENTRY: All data are extracted or calculated.

Fiscal Year	Estimated/Unaudited Actuals - Unrestricted (Resources 0000-1999) Salaries and Benefits (Form 01, Objects 1000-3999)	Estimated/Unaudited Actuals - Unrestricted (Resources 0000-1999) Total Expenditures (Form 01, Objects 1000-7499)	Ratio of Unrestricted Salaries and Benefits to Total Unrestricted Expenditures
Third Prior Year (2023-24)	120,788,084.90	135,428,913.87	89.2%
Second Prior Year (2024-25)	117,202,661.34	136,363,657.81	85.9%
First Prior Year (2025-26)	123,761,366.00	145,116,149.58	85.3%
		Historical Average Ratio:	86.8%

	Budget Year (2026-27)	1st Subsequent Year (2027-28)	2nd Subsequent Year (2028-29)
District's Reserve Standard Percentage (Criterion 10B, Line 4):	3.0%	3.0%	3.0%
District's Salaries and Benefits Standard (historical average ratio, plus/minus the greater of 3% or the district's reserve standard percentage):	**83.8% to 89.8%**	**83.8% to 89.8%**	**83.8% to 89.8%**

5B. Calculating the District's Projected Ratio of Unrestricted Salaries and Benefits to Total Unrestricted General Fund Expenditures

DATA ENTRY: If Form MYP exists, Unrestricted Salaries and Benefits, and Total Unrestricted Expenditures data for the 1st and 2nd Subsequent Years will be extracted; if not, enter data for the two subsequent years. All other data are extracted or calculated.

Fiscal Year	Budget - Unrestricted (Resources 0000-1999) Salaries and Benefits (Form MYP, Lines B1-B3)	Budget - Unrestricted (Resources 0000-1999) Total Expenditures (Form MYP, Lines B1-B8, B10)	Ratio of Unrestricted Salaries and Benefits to Total Unrestricted Expenditures	Status
Budget Year (2026-27)	126,460,358.33	144,175,130.33	87.7%	Met
1st Subsequent Year (2027-28)	127,786,825.78	146,732,691.92	87.1%	Met
2nd Subsequent Year (2028-29)	129,300,667.96	148,805,489.85	86.9%	Met

5C. Comparison of District Salaries and Benefits Ratio to the Standard

DATA ENTRY: Enter an explanation if the standard is not met.

1a. STANDARD MET - Ratio of total unrestricted salaries and benefits to total unrestricted expenditures has met the standard for the budget and two subsequent fiscal years.

Explanation:
(required if NOT met)

6. CRITERION: Other Revenues and Expenditures

STANDARD: Projected operating revenues (including federal, other state, and other local) or expenditures (including books and supplies, and services and other operating), for any of the budget year or two subsequent fiscal years, have not changed from the prior fiscal year amount by more than the percentage change in population and the funded cost-of-living adjustment (COLA) plus or minus ten percent.

For each major object category, changes that exceed the percentage change in population and the funded COLA plus or minus five percent must be explained.

6A. Calculating the District's Other Revenues and Expenditures Standard Percentage Ranges

DATA ENTRY: All data are extracted or calculated.

	Budget Year (2026-27)	1st Subsequent Year (2027-28)	2nd Subsequent Year (2028-29)
1. District's Change in Population and Funding Level (Criterion 4A1, Step 3):	3.39%	1.92%	1.38%
2. District's Other Revenues and Expenditures Standard Percentage Range (Line 1, plus/minus 10%):	**-6.61% to 13.39%**	**-8.08% to 11.92%**	**-8.62% to 11.38%**
3. District's Other Revenues and Expenditures Explanation Percentage Range (Line 1, plus/minus 5%):	-1.61% to 8.39%	-3.08% to 6.92%	-3.62% to 6.38%

6B. Calculating the District's Change by Major Object Category and Comparison to the Explanation Percentage Range (Section 6A, Line 3)

DATA ENTRY: If Form MYP exists, the 1st and 2nd Subsequent Year data for each revenue and expenditure section will be extracted; if not, enter data for the two subsequent years. All other data are extracted or calculated.

Explanations must be entered for each category if the percent change for any year exceeds the district's explanation percentage range.

Object Range / Fiscal Year	Amount	Percent Change Over Previous Year	Change Is Outside Explanation Range
Federal Revenue (Fund 01, Objects 8100-8299) (Form MYP, Line A2)			
First Prior Year (2025-26)	8,175,655.00		
Budget Year (2026-27)	8,635,483.00	5.62%	No
1st Subsequent Year (2027-28)	8,635,483.00	0.00%	No
2nd Subsequent Year (2028-29)	8,635,483.00	0.00%	No

Explanation: (required if Yes)
Federal revenue rises about $460K (5.6%), driven by restricted federal carryover budgeted at adoption and updated Title allocations (Title I ~$2.20M, Title II-A ~$332K, Title IV ~$153K), net of Title III zeroed (~$223K, no award).Medi-Cal reimbursement is held flat at $1.365M in both 25-26 and 26-27, so it is not a driver of the year-over-year change.

Other State Revenue (Fund 01, Objects 8300-8599) (Form MYP, Line A3)			
First Prior Year (2025-26)	33,906,558.00		
Budget Year (2026-27)	39,090,683.00	15.29%	Yes
1st Subsequent Year (2027-28)	35,395,744.00	(9.45%)	Yes
2nd Subsequent Year (2028-29)	36,522,202.73	3.18%	No

Explanation: (required if Yes)
Other State revenue rises about $3.9M (11%), driven primarily by Special Education State revenue budgeted up ~30% per the May Revise (~+$3.7M) plus the 2.87% statutory COLA on categoricals.This is recurring program growth, not one-time funding; it continues at statutory COLA in the subsequent years.

Other Local Revenue (Fund 01, Objects 8600-8799) (Form MYP, Line A4)			
First Prior Year (2025-26)	8,253,625.00		
Budget Year (2026-27)	7,966,080.00	(3.48%)	Yes
1st Subsequent Year (2027-28)	7,915,547.26	(.63%)	No
2nd Subsequent Year (2028-29)	7,915,547.26	0.00%	No

Explanation: (required if Yes)
The District does not budget donations and other unpredictable local revenue; these are recognized as received and trued up at First and Second Interim. The ~$50K subsequent-year decline is non-recurrence of a one-time local item.

Books and Supplies (Fund 01, Objects 4000-4999) (Form MYP, Line B4)

First Prior Year (2025-26)	6,467,317.00		
Budget Year (2026-27)	8,010,822.00	23.87%	Yes
1st Subsequent Year (2027-28)	7,681,489.53	(4.11%)	Yes
2nd Subsequent Year (2028-29)	7,852,223.10	2.22%	No

Explanation: (required if Yes)

Books and supplies rise about $1.5M (24%), predominantly restricted grant/categorical carryover loaded at adoption (restricted 4000s +$1,379,136; unrestricted essentially flat, +$164,369).Carryover is spent down over the year and returns to normal levels by First and Second Interim.

Services and Other Operating Expenditures (Fund 01, Objects 5000-5999) (Form MYP, Line B5)

First Prior Year (2025-26)	44,372,124.05		
Budget Year (2026-27)	43,925,323.00	(1.01%)	No
1st Subsequent Year (2027-28)	45,039,386.95	2.54%	No
2nd Subsequent Year (2028-29)	46,278,911.02	2.75%	No

Explanation: (required if Yes)

The budget-year change (-1%) is the net of two largely offsetting moves: unrestricted services +$1.93M ($16.10M to $18.02M; SpEd transportation, property/liability insurance, and normalized legal),and restricted services -$2.38M ($28.28M to $25.90M; reduced SpEd non-public agency/contracted staffing). Elevated 25-26 legal costs do not recur. The 1SY +2.5% is ordinary cost escalation.

6C. Calculating the District's Change in Total Operating Revenues and Expenditures (Section 6A, Line 2)

DATA ENTRY: All data are extracted or calculated.

Total Federal, Other State, and Other Local Revenue (Criterion 6B)

Object Range / Fiscal Year	Amount	Percent Change Over Previous Year	Status
First Prior Year (2025-26)	50,335,838.00		
Budget Year (2026-27)	55,692,246.00	10.64%	Met
1st Subsequent Year (2027-28)	51,946,774.26	(6.73%)	Met
2nd Subsequent Year (2028-29)	53,073,232.99	2.17%	Met

Total Books and Supplies, and Services and Other Operating Expenditures (Criterion 6B)

First Prior Year (2025-26)	50,839,441.05		
Budget Year (2026-27)	51,936,145.00	2.16%	Met
1st Subsequent Year (2027-28)	52,720,876.48	1.51%	Met
2nd Subsequent Year (2028-29)	54,131,134.12	2.67%	Met

6D. Comparison of District Total Operating Revenues and Expenditures to the Standard Percentage Range

DATA ENTRY: Explanations are linked from Section 6B if the status in Section 6C is not met; no entry is allowed below.

1a. STANDARD MET - Projected total operating revenues have not changed by more than the standard for the budget and two subsequent fiscal years.

Explanation:
Federal Revenue
(linked from 6B
if NOT met)

Explanation:
Other State Revenue
(linked from 6B
if NOT met)

Explanation:
Other Local Revenue
(linked from 6B
if NOT met)

1b. STANDARD MET - Projected total operating expenditures have not changed by more than the standard for the budget and two subsequent fiscal years.

Explanation:
Books and Supplies
(linked from 6B
if NOT met)

Explanation:
Services and Other Exps
(linked from 6B
if NOT met)

7. CRITERION: Facilities Maintenance

STANDARD: Confirm that the annual contribution for facilities maintenance funding is not less than the amount required pursuant to Education Code Section 17070.75, if applicable, and that the district is providing adequately to preserve the functionality of its facilities for their normal life in accordance with Education Code sections 52060(d)(1) and 17002(d)(1).

Determining the District's Compliance with the Contribution Requirement for EC Section 17070.75 - Ongoing and Major Maintenance/Restricted Maintenance Account (OMMA/RMA)

NOTE: EC Section 17070.75 requires the district to deposit into the account a minimum amount equal to or greater than three percent of the total general fund expenditures and other financing uses for that fiscal year. Statute exclude the following resource codes from the total general fund expenditures calculation: 3212, 3213, 3214, 3216, 3218, 3219, 3225, 3226, 3227, 3228, 5316, 5632, 5633, 5634, 7027, and 7690.

DATA ENTRY: Click the appropriate Yes or No button for special education local plan area (SELPA) administrative units (AUs); all other data are extracted or calculated. If standard is not met, enter an X in the appropriate box and enter an explanation, if applicable.

1. a. For districts that are the AU of a SELPA, do you choose to exclude revenues that are passed through to participating members of the SELPA from the OMMA/RMA required minimum contribution calculation? — No

   b. Pass-through revenues and apportionments that may be excluded from the OMMA/RMA calculation per EC Section 17070.75(b)(2)(D) (Fund 10, resources 3300-3499, 6500-6540 and 6546, objects 7211-7213 and 7221-7223) — 0.00

2. Ongoing and Major Maintenance/Restricted Maintenance Account

a. Budgeted Expenditures and Other Financing Uses (Form 01, objects 1000-7999, exclude resources 3212, 3213, 3214, 3216, 3218, 3219, 3225, 3226, 3227, 3228, 5316, 5632, 5633, 5634, 7027, and 7690)	232,505,243.59			
b. Plus: Pass-through Revenues and Apportionments (Line 1b, if line 1a is No)	0.00			
		3% Required Minimum Contribution (Line 2c times 3%)	Budgeted Contribution[1] to the Ongoing and Major Maintenance Account	Status
c. Net Budgeted Expenditures and Other Financing Uses	232,505,243.59	6,975,157.31	6,978,000.00	Met

[1] Fund 01, Resource 8150, Objects 8900-8999

If standard is not met, enter an X in the box that best describes why the minimum required contribution was not made:

- [ ] Not applicable (district does not participate in the Leroy F. Greene School Facilities Act of 1998)
- [ ] Exempt (due to district's small size [EC Section 17070.75 (b)(2)(E)])
- [ ] Other (explanation must be provided)

Explanation: (required if NOT met and Other is marked)

The District is funding the full 3% required contribution to the Ongoing and Major Maintenance Account (Resource 8150), $6,977,224, per EC 17070.75. The Adopted Budget reflects the full required contribution.

8. CRITERION: Deficit Spending

STANDARD: Unrestricted deficit spending (total unrestricted expenditures and other financing uses is greater than total unrestricted revenues and other financing sources) as a percentage of total unrestricted expenditures and other financing uses, has not exceeded one-third of the district's available reserves[1] as a percentage of total expenditures and other financing uses[2] in two out of three prior fiscal years.

8A. Calculating the District's Deficit Spending Standard Percentage Levels

DATA ENTRY: All data are extracted or calculated.

		Third Prior Year (2023-24)	Second Prior Year (2024-25)	First Prior Year (2025-26)
1.	District's Available Reserve Amounts (resources 0000-1999)			
	a. Stabilization Arrangements (Funds 01 and 17, Object 9750)	0.00	0.00	0.00
	b. Reserve for Economic Uncertainties (Funds 01 and 17, Object 9789)	0.00	0.00	6,938,540.00
	c. Unassigned/Unappropriated (Funds 01 and 17, Object 9790)	37,654,990.96	33,971,584.93	0.00
	d. Negative General Fund Ending Balances in Restricted Resources (Fund 01, Object 979Z, if negative, for each of resources 2000-9999)	(1.30)	(1.26)	(1.26)
	e. Available Reserves (Lines 1a through 1d)	37,654,989.66	33,971,583.67	6,938,538.74
2.	Expenditures and Other Financing Uses			
	a. District's Total Expenditures and Other Financing Uses (Fund 01, objects 1000-7999)	223,033,913.78	228,377,937.38	231,284,528.03
	b. Plus: Special Education Pass-through Funds (Fund 10, resources 3300-3499, 6500-6540 and 6546, objects 7211-7213 and 7221-7223)			0.00
	c. Total Expenditures and Other Financing Uses (Line 2a plus Line 2b)	223,033,913.78	228,377,937.38	231,284,528.03
3.	District's Available Reserve Percentage (Line 1e divided by Line 2c)	16.9%	14.9%	3.0%
	District's Deficit Spending Standard Percentage Levels (Line 3 times 1/3):	**5.6%**	**5.0%**	**1.0%**

[1]Available reserves are the unrestricted amounts in the Stabilization Arrangement, Reserve for Economic Uncertainties, and Unassigned/Unappropriated accounts in the General Fund and the Special Reserve Fund for Other Than Capital Outlay Projects. Available reserves will be reduced by any negative ending balances in restricted resources in the General Fund.

[2]A school district that is the Administrative Unit of a Special Education Local Plan Area (SELPA) may exclude from its expenditures the distribution of funds to its participating members.

8B. Calculating the District's Deficit Spending Percentages

DATA ENTRY: All data are extracted or calculated.

Fiscal Year	Net Change in Unrestricted Fund Balance (Form 01, Section E)	Total Unrestricted Expenditures and Other Financing Uses (Form 01, Objects 1000-7999)	Deficit Spending Level (If Net Change in Unrestricted Fund Balance is negative, else N/A)	Status
Third Prior Year (2023-24)	5,114,032.65	135,589,909.98	N/A	Met
Second Prior Year (2024-25)	(3,813,843.38)	137,367,387.75	2.8%	Met
First Prior Year (2025-26)	(14,197,930.58)	147,116,149.58	9.7%	Not Met
Budget Year (2026-27) (Information only)	(3,750,355.33)	145,925,130.33		

8C. Comparison of District Deficit Spending to the Standard

DATA ENTRY: Enter an explanation if the standard is not met.

1a. STANDARD MET - Unrestricted deficit spending, if any, has not exceeded the standard percentage level in two or more of the three prior years.

Explanation:
(required if NOT met)

9. CRITERION: Fund and Cash Balances

A. Fund Balance STANDARD: Budgeted beginning unrestricted general fund balance has not been overestimated for two out of three prior fiscal years by more than the following percentage levels:

Percentage Level [1]	District ADA
1.7%	0 to 300
1.3%	301 to 1,000
1.0%	1,001 to 30,000
0.7%	30,001 to 250,000
0.3%	250,001 and over

[1] Percentage levels equate to a rate of deficit spending which would eliminate recommended reserves for economic uncertainties over a three year period.

District Estimated P-2 ADA (Form A, Lines A6 and C4):	12,908
District's Fund Balance Standard Percentage Level:	**1.0%**

9A-1. Calculating the District's Unrestricted General Fund Beginning Balance Percentages

DATA ENTRY: Enter data in the Original Budget column for the First, Second, and Third Prior Years; all other data are extracted or calculated.

Fiscal Year	Unrestricted General Fund Beginning Balance [2] (Form 01, Line F1e, Unrestricted Column) Original Budget	Estimated/Unaudited Actuals	Beginning Fund Balance Variance Level (If overestimated, else N/A)	Status
Third Prior Year (2023-24)	36,041,502.74	32,586,310.30	9.6%	Not Met
Second Prior Year (2024-25)	30,676,644.30	37,828,400.95	N/A	Met
First Prior Year (2025-26)	31,512,041.22	34,014,557.57	N/A	Met
Budget Year (2026-27) (Information only)	19,816,626.99			

[2] Adjusted beginning balance, including audit adjustments and other restatements (objects 9791-9795)

9A-2. Comparison of District Unrestricted Beginning Fund Balance to the Standard

DATA ENTRY: Enter an explanation if the standard is not met.

1a. STANDARD MET - Unrestricted general fund beginning fund balance has not been overestimated by more than the standard percentage level for two or more of the previous three years.

Explanation:
(required if NOT met)

Of the three prior years, only 2023-24 had a budgeted unrestricted beginning balance above actuals; 2024-25 and 2025-26 were not overestimated, so the standard is met in two of three years.The District projects the beginning unrestricted balance from updated estimated actuals at adoption and trues it up at First and Second Interim.

B. Cash Balance Standard: Projected general fund cash balance will be positive at the end of the current fiscal year.

9B-1: Determining if the District's Ending Cash Balance is Positive

DATA ENTRY: If Form CASH exists, data will be extracted; if not, data must be entered below.

Fiscal Year	Ending Cash Balance General Fund (Form CASH, Line F, June Column)	Status
Current Year (2026-27)	24,028,142.81	Met

9B-2. Comparison of the District's Ending Cash Balance to the Standard

DATA ENTRY: Enter an explanation if the standard is not met.

1a. STANDARD MET - Projected general fund cash balance will be positive at the end of the current fiscal year.

Explanation:
(required if NOT met)

10. CRITERION: Reserves

STANDARD: Available reserves[1] for any of the budget year or two subsequent fiscal years are not less than the following percentages or amounts[2] as applied to total expenditures and other financing uses[3]:

DATA ENTRY: Budget Year data are extracted. If Form MYP exists, 1st and 2nd Subsequent Year data will be extracted. If not, enter district regular ADA and charter school ADA corresponding to financial data reported in the General Fund, only, for the two subsequent years.

Percentage Level	District ADA
5% or $90,000 (greater of)	0 to 300
4% or $90,000 (greater of)	301 to 1,000
3%	1,001 to 30,000
2%	30,001 to 250,000
1%	250,001 and over

[1] Available reserves are the unrestricted amounts in the Stabilization Arrangements, Reserve for Economic Uncertainties, and Unassigned/Unappropriated accounts in the General Fund and the Special Reserve Fund for Other Than Capital Outlay Projects. Available reserves will be reduced by any negative ending balances in restricted resources in the General Fund.

[2] Dollar amounts to be adjusted annually by the prior year statutory cost-of-living adjustment, as referenced in Education Code Section 42238.02, rounded to the nearest thousand.

[3] A school district that is the Administrative Unit (AU) of a Special Education Local Plan Area (SELPA) may exclude from its expenditures the distribution of funds to its participating members.

	Budget Year (2026-27)	1st Subsequent Year (2027-28)	2nd Subsequent Year (2028-29)
District Estimated P-2 ADA (Budget Year, Form A, Lines A4 and C4. Subsequent Years, Form MYP, Line F2, if available.)	12,893	12,739	12,586
District's Reserve Standard Percentage Level:	**3%**	**3%**	**3%**

10A. Calculating the District's Special Education Pass-through Exclusions (only for districts that serve as the AU of a SELPA)

DATA ENTRY: For SELPA AUs, if Form MYP exists, all data will be extracted including the Yes/No button selection. If not, click the appropriate Yes or No button for item 1. If Yes, enter data for item 2a. If No, enter data for the two subsequent years in item 2b; Budget Year data are extracted.

For districts that serve as the AU of a SELPA (Form MYP, Lines F1a, F1b1, and F1b2):

1. Do you choose to exclude from the reserve calculation the pass-through funds distributed to SELPA members? YES

2. If you are the SELPA AU and are excluding special education pass-through funds:

   a. Enter the name(s) of the SELPA(s):

	Budget Year (2026-27)	1st Subsequent Year (2027-28)	2nd Subsequent Year (2028-29)
b. Special Education Pass-through Funds (Fund 10, resources 3300-3499, 6500-6540 and 6546, objects 7211-7213 and 7221-7223)	0.00		

10B. Calculating the District's Reserve Standard

DATA ENTRY: If Form MYP exists, 1st and 2nd Subsequent Year data for lines 1 and 2 will be extracted; if not, enter data for the two subsequent years.

All other data are extracted or calculated.

	Budget Year (2026-27)	1st Subsequent Year (2027-28)	2nd Subsequent Year (2028-29)
1. Expenditures and Other Financing Uses (Fund 01, objects 1000-7999) (Form MYP, Line B11)	232,505,243.59	235,333,986.11	238,778,545.43
2. Plus: Special Education Pass-through (Criterion 10A, Line 2b, if Criterion 10A, Line 1 is No)			
3. Total Expenditures and Other Financing Uses (Line B1 plus Line B2)	232,505,243.59	235,333,986.11	238,778,545.43

4.	Reserve Standard Percentage Level	3%	3%	3%
5.	Reserve Standard - by Percent (Line B3 times Line B4)	6,975,157.31	7,060,019.58	7,163,356.36
6.	Reserve Standard - by Amount ($90,000 for districts with 0 to 1,000 ADA, else 0)	0.00	0.00	0.00
7.	**District's Reserve Standard (Greater of Line B5 or Line B6)**	**6,975,157.31**	**7,060,019.58**	**7,163,356.36**

10C. Calculating the District's Budgeted Reserve Amount

DATA ENTRY: If Form MYP exists, 1st and 2nd Subsequent Year data for lines 1 through 7 will be extracted; if not, enter data for the two subsequent years.

All other data are extracted or calculated.

Reserve Amounts (Unrestricted resources 0000-1999 except Line 4):		Budget Year (2026-27)	1st Subsequent Year (2027-28)	2nd Subsequent Year (2028-29)
1.	General Fund - Stabilization Arrangements (Fund 01, Object 9750) (Form MYP, Line E1a)	0.00	0.00	0.00
2.	General Fund - Reserve for Economic Uncertainties (Fund 01, Object 9789) (Form MYP, Line E1b)	6,975,160.00	7,060,020.00	7,163,357.00
3.	General Fund - Unassigned/Unappropriated Amount (Fund 01, Object 9790) (Form MYP, Line E1c)	0.00	0.00	0.00
4.	General Fund - Negative Ending Balances in Restricted Resources (Fund 01, Object 979Z, if negative, for each of resources 2000-9999) (Form MYP, Line E1d)	(1.26)	0.00	0.00
5.	Special Reserve Fund - Stabilization Arrangements (Fund 17, Object 9750) (Form MYP, Line E2a)	0.00	0.00	0.00
6.	Special Reserve Fund - Reserve for Economic Uncertainties (Fund 17, Object 9789) (Form MYP, Line E2b)	0.00	0.00	0.00
7.	Special Reserve Fund - Unassigned/Unappropriated Amount (Fund 17, Object 9790) (Form MYP, Line E2c)	0.00	0.00	0.00
8.	District's Budgeted Reserve Amount (Lines C1 thru C7)	6,975,158.74	7,060,020.00	7,163,357.00
9.	District's Budgeted Reserve Percentage (Information only) (Line 8 divided by Section 10B, Line 3)	3.00%	3.00%	3.00%
	District's Reserve Standard (Section 10B, Line 7):	**6,975,157.31**	**7,060,019.58**	**7,163,356.36**
	Status:	Met	Met	Met

10D. Comparison of District Reserve Amount to the Standard

DATA ENTRY: Enter an explanation if the standard is not met.

1a. STANDARD MET - Projected available reserves have met the standard for the budget and two subsequent fiscal years.

Explanation:
(required if NOT met)

SUPPLEMENTAL INFORMATION

DATA ENTRY: Click the appropriate Yes or No button for items S1 through S4. Enter an explanation for each Yes answer.

S1. Contingent Liabilities

1a. Does your district have any known or contingent liabilities (e.g., financial or program audits, litigation, state compliance reviews) that may impact the budget? — Yes

1b. If Yes, identify the liabilities and how they may impact the budget:

The District's principal contingency is the pending CSEA classified labor agreement (existence disclosed; cost not yet determined), together with routine pending litigation. The budget is adjusted at interim as these matters resolve.

S2. Use of One-time Revenues for Ongoing Expenditures

1a. Does your district have ongoing general fund expenditures in the budget in excess of one percent of the total general fund expenditures that are funded with one-time resources? — Yes

1b. If Yes, identify the expenditures and explain how the one-time resources will be replaced to continue funding the ongoing expenditures in the following fiscal years:

Recurring RDA pass-through (~$2.0M, received annually by Board resolution) offsets the ongoing routine-maintenance contribution; the backfill is the recurring RDA receipt.One-time LREBG (~$559K) is not used for ongoing costs. The District otherwise avoids funding ongoing expenditures with one-time revenue.

S3. Use of Ongoing Revenues for One-time Expenditures

1a. Does your district have large non-recurring general fund expenditures that are funded with ongoing general fund revenues? — No

1b. If Yes, identify the expenditures:

S4. Contingent Revenues

1a. Does your district have projected revenues for the budget year or either of the two subsequent fiscal years contingent on reauthorization by the local government, special legislation, or other definitive act (e.g., parcel taxes, forest reserves)? — No

1b. If Yes, identify any of these revenues that are dedicated for ongoing expenses and explain how the revenues will be replaced or expenditures reduced:

S5. Contributions

Identify projected contributions from unrestricted resources in the general fund to restricted resources in the general fund for the budget year and two subsequent fiscal years. Provide an explanation if contributions have changed from the prior fiscal year amounts by more than $20,000 and more than ten percent. Explanation should include whether contributions are ongoing or one-time in nature.

Identify projected transfers to or from the general fund to cover operating deficits in either the general fund or any other fund for the budget year and two subsequent fiscal years. Provide an explanation if transfers have changed from the prior fiscal year amounts by more than $20,000 and more than ten percent. Explanation should include whether transfers are ongoing or one-time in nature.

Estimate the impact of any capital projects on the general fund operational budget.

District's Contributions and Transfers Standard: -10.0% to +10.0% or -$20,000 to +$20,000

S5A. Identification of the District's Projected Contributions, Transfers, and Capital Projects that may Impact the General Fund

DATA ENTRY: For Contributions, enter data in the Projection column for the 1st and 2nd Subsequent Years. Contributions for the First Prior Year and Budget Year data will be extracted. For Transfers In and Transfers Out, the First Prior Year and Budget Year data will be extracted. If Form MYP exists, the data will be extracted for the 1st and 2nd Subsequent Years. If Form MYP does not exist, enter data for the 1st and 2nd Subsequent Years. Click the appropriate button for 1d. All other data are extracted or calculated.

Description / Fiscal Year	Projection	Amount of Change	Percent Change	Status
1a. **Contributions, Unrestricted General Fund (Fund 01, Resources 0000-1999, Object 8980)**				
First Prior Year (2025-26)	(45,627,547.00)			
Budget Year (2026-27)	(41,109,278.00)	(4,518,269.00)	(9.9%)	Met
1st Subsequent Year (2027-28)	(44,221,680.87)	3,112,402.87	7.6%	Met
2nd Subsequent Year (2028-29)	(44,895,025.38)	673,344.51	1.5%	Met
1b. **Transfers In, General Fund ***				
First Prior Year (2025-26)	0.00			
Budget Year (2026-27)	0.00	0.00	0.0%	Met
1st Subsequent Year (2027-28)	0.00	0.00	0.0%	Met
2nd Subsequent Year (2028-29)	0.00	0.00	0.0%	Met
1c. **Transfers Out, General Fund ***				
First Prior Year (2025-26)	2,000,000.00			
Budget Year (2026-27)	1,750,000.00	(250,000.00)	(12.5%)	Not Met
1st Subsequent Year (2027-28)	1,750,000.00	0.00	0.0%	Met
2nd Subsequent Year (2028-29)	1,750,000.00	0.00	0.0%	Met

1d. **Impact of Capital Projects**

Do you have any capital projects that may impact the general fund operational budget? No

* Include transfers used to cover operating deficits in either the general fund or any other fund.

S5B. Status of the District's Projected Contributions, Transfers, and Capital Projects

DATA ENTRY: Enter an explanation if Not Met for items 1a-1c or if Yes for item 1d.

1a. MET - Projected contributions have not changed by more than the standard for the budget and two subsequent fiscal years.

Explanation: (required if NOT met)

Main recipients are Special Education ~$38.5M (incl. IDEA and Mental Health) and Routine Restricted Maintenance ~$6.96M, offset by RDA -$2.0M.The budget-year decrease (-$2.5M) reflects lower SpEd non-public agency/contracted staffing plus the RDA offset; out-year growth is SpEd salary and benefit cost outpacing revenue.

1b. MET - Projected transfers in have not changed by more than the standard for the budget and two subsequent fiscal years.

Explanation:
(required if NOT met)

1c. NOT MET - The projected transfers out of the general fund have changed by more than the standard for one or more of the budget or subsequent two fiscal years. Identify the amount(s) transferred, by fund, and whether transfers are ongoing or one-time in nature. If ongoing, explain the district's plan, with timeframes, for reducing or eliminating the transfers.

Explanation:
(required if NOT met)

The General Fund transfer of $1,750,000 is a Board-designated set-aside to the Self-Insurance Fund (Fund 67), used in-house for OPEB and long-term obligations.The $0.25M decrease is the step-down from the one-time $2.0M in 25-26 to the ongoing $1.75M level.

1d. NO - There are no capital projects that may impact the general fund operational budget.

Project Information:
(required if YES)

S6. Long-term Commitments

Identify all existing and new multiyear commitments[1] and their annual required payments for the budget year and two subsequent fiscal years. Explain how any increase in annual payments will be funded. Also explain how any decrease to funding sources used to pay long-term commitments will be replaced.

[1] Include multiyear commitments, multiyear debt agreements, and new programs or contracts that result in long-term obligations.

S6A. Identification of the District's Long-term Commitments

DATA ENTRY: Click the appropriate button in item 1 and enter data in all columns of item 2 for applicable long-term commitments; there are no extractions in this section.

1. Does your district have long-term (multiyear) commitments?
   (If No, skip item 2 and Sections S6B and S6C) — Yes

2. If Yes to item 1, list all new and existing multiyear commitments and required annual debt service amounts. Do not include long-term commitments for postemployment benefits other than pensions (OPEB); OPEB is disclosed in item S7A.

Type of Commitment	# of Years Remaining	SACS Fund and Object Codes Used For: Funding Sources (Revenues)	Debt Service (Expenditures)	Principal Balance as of July 1, 2026
Leases	2	01.0-00000.0-00000-00000-8011	01.0-00000.0-00000-91000-7439	138,079
Certificates of Participation				
General Obligation Bonds	28	51.0-00000.0-00000-00000-8611	51.0-00000.0-00000-91000-7433	212,504,804
Supp Early Retirement Program				
State School Building Loans				
Compensated Absences		01.0-00000.0-00000-00000-8011		4,910,895
Other Long-term Commitments (do not include OPEB):				
Finance Purchase - Energy Conservation (2015 & 2018)	12	01.0-00000.0-00000-00000-8011	01.0-00000.0-00000-91000-7439	10,789,524
SBITA - Software Subscriptions	4	01.0-00000.0-00000-00000-8011	01.0-00000.0-00000-91000-7439	654,222
TOTAL:				228,997,524

Type of Commitment (continued)	Prior Year (2025-26) Annual Payment (P & I)	Budget Year (2026-27) Annual Payment (P & I)	1st Subsequent Year (2027-28) Annual Payment (P & I)	2nd Subsequent Year (2028-29) Annual Payment (P & I)
Leases	283,783	89,287	52,085	0
Certificates of Participation				
General Obligation Bonds	18,601,972	21,390,838	19,492,088	19,644,588
Supp Early Retirement Program				
State School Building Loans				
Compensated Absences				
Other Long-term Commitments (continued):				
Finance Purchase - Energy Conservation (2015 & 2018)	1,305,871	1,367,299	1,431,462	1,412,895
SBITA - Software Subscriptions	157,416	120,645	150,806	188,508
Total Annual Payments:	20,349,042	22,968,069	21,126,441	21,245,991
Has total annual payment increased over prior year (2025-26)?		**Yes**	**Yes**	**Yes**

S6B. Comparison of the District's Annual Payments to Prior Year Annual Payment

DATA ENTRY: Enter an explanation if Yes.

1a. Yes - Annual payments for long-term commitments have increased in one or more of the budget or two subsequent fiscal years. Explain how the increase in annual payments will be funded.

Explanation:
(required if Yes to increase in total annual payments)

The increase in total annual payments is scheduled general obligation bond debt service, funded entirely by voter-approved property taxes through the Bond Interest and Redemption Fund (Fund 51), with no impact on the General Fund.General Fund commitments (leases, the energy finance purchase, and SBITA) are funded from ongoing General Fund revenues within the adopted budget and multiyear projection.

S6C. Identification of Decreases to Funding Sources Used to Pay Long-term Commitments

DATA ENTRY: Click the appropriate Yes or No button in item 1; if Yes, an explanation is required in item 2.

1. Will funding sources used to pay long-term commitments decrease or expire prior to the end of the commitment period, or are they one-time sources?

No

2. No - Funding sources will not decrease or expire prior to the end of the commitment period, and one-time funds are not being used for long-term commitment annual payments.

Explanation:
(required if Yes)

S7. Unfunded Liabilities

Estimate the unfunded liability for postemployment benefits other than pensions (OPEB) based on an actuarial valuation, if required, or other method; identify or estimate the actuarially determined contribution (if available); and indicate how the obligation is funded (pay-as-you-go, amortized over a specific period, etc.).

Estimate the unfunded liability for self-insurance programs such as workers' compensation based on an actuarial valuation, if required, or other method; identify or estimate the required contribution; and indicate how the obligation is funded (level of risk retained, funding approach, etc.).

S7A. Identification of the District's Estimated Unfunded Liability for Postemployment Benefits Other than Pensions (OPEB)

DATA ENTRY: Click the appropriate button in item 1 and enter data in all other applicable items; there are no extractions in this section except the budget year data on line 5b.

1	Does your district provide postemployment benefits other than pensions (OPEB)? (If No, skip items 2-5)	Yes
2.	For the district's OPEB:	
	a. Are they lifetime benefits?	Yes
	b. Do benefits continue past age 65?	Yes

c. Describe any other characteristics of the district's OPEB program including eligibility criteria and amounts, if any, that retirees are required to contribute toward their own benefits:

CALPERS requires that districts make a minimum required contribution to their benefits for life.

3	a. Are OPEB financed on a pay-as-you-go, actuarial cost, or other method?	Pay-as-you-go	
	b. Indicate any accumulated amounts earmarked for OPEB in a self-insurance or governmental fund	Self-Insurance Fund	Governmental Fund
		22,229	0

4.	OPEB Liabilities	
	a. Total OPEB liability	66,906,980.00
	b. OPEB plan(s) fiduciary net position (if applicable)	22,229.00
	c. Total/Net OPEB liability (Line 4a minus Line 4b)	66,884,751.00
	d. Is total OPEB liability based on the district's estimate or an actuarial valuation?	Actuarial
	e. If based on an actuarial valuation, indicate the measurement date of the OPEB valuation	6/30/2024

		Budget Year (2026-27)	1st Subsequent Year (2027-28)	2nd Subsequent Year (2028-29)
5.	OPEB Contributions			
	a. OPEB actuarially determined contribution (ADC), if available, per actuarial valuation or Alternative Measurement Method	0.00	0.00	0.00
	b. OPEB amount contributed (for this purpose, include premiums paid to a self-insurance fund) (funds 01-70, objects 3701-3752)	1,800,820.09	1,794,625.21	1,794,625.21
	c. Cost of OPEB benefits (equivalent of "pay-as-you-go" amount)	2,500,000.00	2,500,000.00	2,500,000.00
	d. Number of retirees receiving OPEB benefits	493.00	500.00	505.00

S7B. Identification of the District's Unfunded Liability for Self-Insurance Programs

DATA ENTRY: Click the appropriate button in item 1 and enter data in all other applicable items; there are no extractions in this section.

1 Does your district operate any self-insurance programs such as workers' compensation, employee health and welfare, or property and liability? (Do not include OPEB, which is covered in Section S7A) (If No, skip items 2-4)

Yes

2 Describe each self-insurance program operated by the district, including details for each such as level of risk retained, funding approach, basis for valuation (district's estimate or actuarial), and date of the valuation:

Worker's Comp and Property and Liability

3. Self-Insurance Liabilities

a. Accrued liability for self-insurance programs	0.00
b. Unfunded liability for self-insurance programs	0.00

4. Self-Insurance Contributions	Budget Year (2026-27)	1st Subsequent Year (2027-28)	2nd Subsequent Year (2028-29)
a. Required contribution (funding) for self-insurance programs	5,331,168.00	5,353,555.00	5,376,167.00
b. Amount contributed (funded) for self-insurance programs	5,331,168.00	5,353,555.00	5,376,167.00

S8. Status of Labor Agreements

Analyze the status of all employee labor agreements. Identify new labor agreements, as well as new commitments provided as part of previously ratified multiyear agreements; and include all contracts, including all administrator contracts (and including all compensation). For new agreements, indicate the date of the required board meeting. Compare the increase in new commitments to the projected increase in ongoing revenues, and explain how these commitments will be funded in future fiscal years.

If salary and benefit negotiations are not finalized at budget adoption, upon settlement with certificated or classified staff:

The school district must determine the cost of the settlement, including salaries, benefits, and any other agreements that change costs, and provide the county office of education (COE) with an analysis of the cost of the settlement and its impact on the operating budget.

The county superintendent shall review the analysis relative to the criteria and standards, and may provide written comments to the president of the district governing board and superintendent.

S8A. Cost Analysis of District's Labor Agreements - Certificated (Non-management) Employees

DATA ENTRY: Enter all applicable data items; there are no extractions in this section.

	Prior Year (2nd Interim) (2025-26)	Budget Year (2026-27)	1st Subsequent Year (2027-28)	2nd Subsequent Year (2028-29)
Number of certificated (non-management) full - time - equivalent (FTE) positions	712.60	711.60	707.60	707.60

Certificated (Non-management) Salary and Benefit Negotiations

1. Are salary and benefit negotiations settled for the budget year? — No

If Yes, and the corresponding public disclosure documents have been filed with the COE, complete questions 2 and 3.

If Yes, and the corresponding public disclosure documents have not been filed with the COE, complete questions 2-5.

If No, identify the unsettled negotiations including any prior year unsettled negotiations and then complete questions 6 and 7.

The Burbank Teachers Association is under a multiyear agreement (7/1/2025-6/30/2028); 2026-27 wages and health & welfare are subject to reopener (Article 35.2) and are not yet settled.No salary schedule increase is included in the budget or MYP. The cost of a 1% increase in salary and statutory benefits is approximately $1,125,767.

Negotiations Settled

2a. Per Government Code Section 3547.5(a), date of public disclosure board meeting:

2b. Per Government Code Section 3547.5(b), was the agreement certified by the district superintendent and chief business official?

If Yes, date of Superintendent and CBO certification:

3. Per Government Code Section 3547.5(c), was a budget revision adopted to meet the costs of the agreement?

If Yes, date of budget revision board adoption:

4. Period covered by the agreement: Begin Date: End Date:

5. Salary settlement:

	Budget Year (2026-27)	1st Subsequent Year (2027-28)	2nd Subsequent Year (2028-29)
Is the cost of salary settlement included in the budget and multiyear projections (MYPs)?			
One Year Agreement			
Total cost of salary settlement			
% change in salary schedule from prior year			
or			
Multiyear Agreement			
Total cost of salary settlement			
% change in salary schedule from prior year (may enter text, such as "Reopener")			

Identify the source of funding that will be used to support multiyear salary commitments:

Negotiations Not Settled

6.	Cost of a one percent increase in salary and statutory benefits	1,125,767

	Budget Year (2026-27)	1st Subsequent Year (2027-28)	2nd Subsequent Year (2028-29)
7. Amount included for any tentative salary schedule increases	0	0	0

Certificated (Non-management) Health and Welfare (H&W) Benefits	Budget Year (2026-27)	1st Subsequent Year (2027-28)	2nd Subsequent Year (2028-29)
1. Are costs of H&W benefit changes included in the budget and MYPs?	Yes	Yes	Yes
2. Total cost of H&W benefits	11,024,933	11,024,933	11,024,933
3. Percent of H&W cost paid by employer			
4. Percent projected change in H&W cost over prior year	0.0%	0.0%	0.0%

Certificated (Non-management) Prior Year Settlements

Are any new costs from prior year settlements included in the budget? No

If Yes, amount of new costs included in the budget and MYPs

If Yes, explain the nature of the new costs:

Certificated (Non-management) Step and Column Adjustments	Budget Year (2026-27)	1st Subsequent Year (2027-28)	2nd Subsequent Year (2028-29)
1. Are step & column adjustments included in the budget and MYPs?	Yes	Yes	Yes
2. Cost of step & column adjustments	1,291,126	1,291,126	1,291,126
3. Percent change in step & column over prior year	1.5%	1.5%	1.5%

Certificated (Non-management) Attrition (layoffs and retirements)	Budget Year (2026-27)	1st Subsequent Year (2027-28)	2nd Subsequent Year (2028-29)
1. Are savings from attrition included in the budget and MYPs?	Yes	Yes	Yes
2. Are additional H&W benefits for those laid-off or retired employees included in the budget and MYPs?	Yes	Yes	Yes

Certificated (Non-management) - Other

List other significant contract changes and the cost impact of each change (i.e., class size, hours of employment, leave of absence, bonuses, etc.):

S8B. Cost Analysis of District's Labor Agreements - Classified (Non-management) Employees

DATA ENTRY: Enter all applicable data items; there are no extractions in this section.

	Prior Year (2nd Interim) (2025-26)	Budget Year (2026-27)	1st Subsequent Year (2027-28)	2nd Subsequent Year (2028-29)
Number of classified(non - management) FTE positions	575.80	569.30	569.30	569.30

Classified (Non-management) Salary and Benefit Negotiations

1. Are salary and benefit negotiations settled for the budget year? No

If Yes, and the corresponding public disclosure documents have been filed with the COE, complete questions 2 and 3.

If Yes, and the corresponding public disclosure documents have not been filed with the COE, complete questions 2-5.

If No, identify the unsettled negotiations including any prior year unsettled negotiations and then complete questions 6 and 7.

CSEA is under a multiyear agreement (7/1/2024-6/30/2027); 2026-27 wages are subject to reopener and are not yet settled.No salary schedule increase is included in the budget or MYP. The cost of a 1% increase in salary and statutory benefits is approximately $617,497.

Negotiations Settled

2a. Per Government Code Section 3547.5(a), date of public disclosure board meeting:

2b. Per Government Code Section 3547.5(b), was the agreement certified by the district superintendent and chief business official?

If Yes, date of Superintendent and CBO certification:

3. Per Government Code Section 3547.5(c), was a budget revision adopted to meet the costs of the agreement?

If Yes, date of budget revision board adoption:

4. Period covered by the agreement: Begin Date: End Date:

5. Salary settlement:

	Budget Year (2026-27)	1st Subsequent Year (2027-28)	2nd Subsequent Year (2028-29)
Is the cost of salary settlement included in the budget and multiyear projections (MYPs)?			
One Year Agreement			
Total cost of salary settlement			
% change in salary schedule from prior year			
or			
Multiyear Agreement			
Total cost of salary settlement			
% change in salary schedule from prior year (may enter text, such as "Reopener")			

Identify the source of funding that will be used to support multiyear salary commitments:

Negotiations Not Settled

6.	Cost of a one percent increase in salary and statutory benefits	617,497

		Budget Year (2026-27)	1st Subsequent Year (2027-28)	2nd Subsequent Year (2028-29)
7.	Amount included for any tentative salary schedule increases	0	0	0

Classified (Non-management) Health and Welfare (H&W) Benefits		Budget Year (2026-27)	1st Subsequent Year (2027-28)	2nd Subsequent Year (2028-29)
1.	Are costs of H&W benefit changes included in the budget and MYPs?	Yes	Yes	Yes
2.	Total cost of H&W benefits	6,879,433	6,879,433	6,879,433
3.	Percent of H&W cost paid by employer			
4.	Percent projected change in H&W cost over prior year	0.0%	0.0%	0.0%

Classified (Non-management) Prior Year Settlements

Are any new costs from prior year settlements included in the budget? No

If Yes, amount of new costs included in the budget and MYPs

If Yes, explain the nature of the new costs:

Classified (Non-management) Step and Column Adjustments		Budget Year (2026-27)	1st Subsequent Year (2027-28)	2nd Subsequent Year (2028-29)
1.	Are step & column adjustments included in the budget and MYPs?	Yes	Yes	Yes
2.	Cost of step & column adjustments	596,967	596,967	596,967
3.	Percent change in step & column over prior year	1.5%	1.5%	1.5%

Classified (Non-management) Attrition (layoffs and retirements)		Budget Year (2026-27)	1st Subsequent Year (2027-28)	2nd Subsequent Year (2028-29)
1.	Are savings from attrition included in the budget and MYPs?	Yes	Yes	Yes
2.	Are additional H&W benefits for those laid-off or retired employees included in the budget and MYPs?	Yes	Yes	Yes

Classified (Non-management) - Other

List other significant contract changes and the cost impact of each change (i.e., hours of employment, leave of absence, bonuses, etc.):

S8C. Cost Analysis of District's Labor Agreements - Management/Supervisor/Confidential Employees

DATA ENTRY: Enter all applicable data items; there are no extractions in this section.

	Prior Year (2nd Interim) (2025-26)	Budget Year (2026-27)	1st Subsequent Year (2027-28)	2nd Subsequent Year (2028-29)
Number of management, supervisor, and confidential FTE positions	120.00	125.30	125.30	125.30

Management/Supervisor/Confidential
Salary and Benefit Negotiations

1. Are salary and benefit negotiations settled for the budget year? n/a

If Yes, complete question 2.

If No, identify the unsettled negotiations including any prior year unsettled negotiations and then complete questions 3 and 4.

If n/a, skip the remainder of Section S8C.

Negotiations Settled

2. Salary settlement:

	Budget Year (2026-27)	1st Subsequent Year (2027-28)	2nd Subsequent Year (2028-29)
Is the cost of salary settlement included in the budget and multiyear projections (MYPs)?			
Total cost of salary settlement			
% change in salary schedule from prior year (may enter text, such as "Reopener")			

Negotiations Not Settled

3. Cost of a one percent increase in salary and statutory benefits

	Budget Year (2026-27)	1st Subsequent Year (2027-28)	2nd Subsequent Year (2028-29)
4. Amount included for any tentative salary schedule increases			

Management/Supervisor/Confidential Health and Welfare (H&W) Benefits	Budget Year (2026-27)	1st Subsequent Year (2027-28)	2nd Subsequent Year (2028-29)
1. Are costs of H&W benefit changes included in the budget and MYPs?			
2. Total cost of H&W benefits			
3. Percent of H&W cost paid by employer			
4. Percent projected change in H&W cost over prior year			

Management/Supervisor/Confidential Step and Column Adjustments	Budget Year (2026-27)	1st Subsequent Year (2027-28)	2nd Subsequent Year (2028-29)
1. Are step & column adjustments included in the budget and MYPs?			
2. Cost of step and column adjustments			
3. Percent change in step & column over prior year			

Management/Supervisor/Confidential Other Benefits (mileage, bonuses, etc.)	Budget Year (2026-27)	1st Subsequent Year (2027-28)	2nd Subsequent Year (2028-29)
1. Are costs of other benefits included in the budget and MYPs?			
2. Total cost of other benefits			
3. Percent change in cost of other benefits over prior year			

S9. Local Control and Accountability Plan (LCAP)

Confirm that the school district's governing board has adopted an LCAP or an update to the LCAP effective for the budget year.

DATA ENTRY: Click the appropriate Yes or No button in item 1, and enter the date in item 2.

1. Did or will the school district's governing board adopt an LCAP or an update to the LCAP effective for the budget year?	Yes
2. Adoption date of the LCAP or an update to the LCAP.	Jun 25, 2026

S10. LCAP Expenditures

Confirm that the school district's budget includes the expenditures necessary to implement the LCAP or annual update to the LCAP.

DATA ENTRY: Click the appropriate Yes or No button.

Does the school district's budget include the expenditures necessary to implement the LCAP or annual update to the LCAP as described in the Local Control and Accountability Plan and Annual Update Template?	Yes

ADDITIONAL FISCAL INDICATORS

The following fiscal indicators are designed to provide additional data for reviewing agencies. A "Yes" answer to any single indicator does not necessarily suggest a cause for concern, but may alert the reviewing agency to the need for additional review. DATA ENTRY: Click the appropriate Yes or No button for items A1 through A9 except item A3, which is automatically completed based on data in Criterion 2.

A1.	Do cash flow projections show that the district will end the budget year with a negative cash balance in the general fund?	No
A2.	Is the system of personnel position control independent from the payroll system?	Yes
A3.	Is enrollment decreasing in both the prior fiscal year and budget year? (Data from the enrollment budget column and actual column of Criterion 2A are used to determine Yes or No)	Yes
A4.	Are new charter schools operating in district boundaries that impact the district's enrollment, either in the prior fiscal year or budget year?	No
A5.	Has the district entered into a bargaining agreement where any of the budget or subsequent years of the agreement would result in salary increases that are expected to exceed the projected state funded cost-of-living adjustment?	No
A6.	Does the district provide uncapped (100% employer paid) health benefits for current or retired employees?	No
A7.	Is the district's financial system independent of the county office system?	No
A8.	Does the district have any reports that indicate fiscal distress pursuant to Education Code Section 42127.6(a)? (If Yes, provide copies to the county office of education)	No
A9.	Have there been personnel changes in the superintendent or chief business official positions within the last 12 months?	Yes

When providing comments for additional fiscal indicators, please include the item number applicable to each comment.

Comments:
(optional)

End of School District Budget Criteria and Standards Review

Description	Resource Codes	Object Codes	2025-26 Estimated Actuals	2026-27 Budget	Percent Difference
A. REVENUES					
1) LCFF Sources		8010-8099	0.00	0.00	0.0%
2) Federal Revenue		8100-8299	542,243.00	542,243.00	0.0%
3) Other State Revenue		8300-8599	5,274,038.00	5,424,258.00	2.8%
4) Other Local Revenue		8600-8799	408,584.00	408,584.00	0.0%
5) TOTAL, REVENUES			6,224,865.00	6,375,085.00	2.4%
B. EXPENDITURES					
1) Certificated Salaries		1000-1999	3,200,728.00	3,425,672.60	7.0%
2) Classified Salaries		2000-2999	932,380.00	960,597.00	3.0%
3) Employee Benefits		3000-3999	1,446,552.00	1,588,324.92	9.8%
4) Books and Supplies		4000-4999	614,274.00	614,274.00	0.0%
5) Services and Other Operating Expenditures		5000-5999	762,341.00	512,119.00	-32.8%
6) Capital Outlay		6000-6999	371,380.00	0.00	-100.0%
7) Other Outgo (excluding Transfers of Indirect Costs)		7100-7299, 7400-7499	0.00	0.00	0.0%
8) Other Outgo - Transfers of Indirect Costs		7300-7399	324,052.00	517,138.00	59.6%
9) TOTAL, EXPENDITURES			7,651,707.00	7,618,125.52	-0.4%
C. EXCESS (DEFICIENCY) OF REVENUES OVER EXPENDITURES BEFORE OTHER FINANCING SOURCES AND USES (A5 - B9)			(1,426,842.00)	(1,243,040.52)	-12.9%
D. OTHER FINANCING SOURCES/USES					
1) Interfund Transfers					
a) Transfers In		8900-8929	0.00	0.00	0.0%
b) Transfers Out		7600-7629	0.00	0.00	0.0%
2) Other Sources/Uses					
a) Sources		8930-8979	0.00	0.00	0.0%
b) Uses		7630-7699	0.00	0.00	0.0%
3) Contributions		8980-8999	0.00	0.00	0.0%
4) TOTAL, OTHER FINANCING SOURCES/USES			0.00	0.00	0.0%
E. NET INCREASE (DECREASE) IN FUND BALANCE (C + D4)			(1,426,842.00)	(1,243,040.52)	-12.9%
F. FUND BALANCE, RESERVES					
1) Beginning Fund Balance					
a) As of July 1 - Unaudited		9791	3,525,529.77	2,098,687.77	-40.5%
b) Audit Adjustments		9793	0.00	0.00	0.0%
c) As of July 1 - Audited (F1a + F1b)			3,525,529.77	2,098,687.77	-40.5%
d) Other Restatements		9795	0.00	0.00	0.0%
e) Adjusted Beginning Balance (F1c + F1d)			3,525,529.77	2,098,687.77	-40.5%
2) Ending Balance, June 30 (E + F1e)			2,098,687.77	855,647.25	-59.2%
Components of Ending Fund Balance					
a) Nonspendable					
Revolving Cash		9711	0.00	0.00	0.0%
Stores		9712	0.00	0.00	0.0%
Prepaid Items		9713	0.00	0.00	0.0%
All Others		9719	0.00	0.00	0.0%
b) Restricted		9740	316,598.03	0.51	-100.0%
c) Committed					
Stabilization Arrangements		9750	0.00	0.00	0.0%
Other Commitments		9760	0.00	0.00	0.0%
d) Assigned					
Other Assignments		9780	1,782,089.74	855,646.74	-52.0%
e) Unassigned/Unappropriated Reserve for Economic Uncertainties		9789	0.00	0.00	0.0%
Unassigned/Unappropriated Amount		9790	0.00	0.00	0.0%
G. ASSETS					
1) Cash					
a) in County Treasury		9110	0.00		
1) Fair Value Adjustment to Cash in County Treasury		9111	0.00		
b) in Banks		9120	0.00		
c) in Revolving Cash Account		9130	0.00		
d) with Fiscal Agent/Trustee		9135	0.00		

Description	Resource Codes	Object Codes	2025-26 Estimated Actuals	2026-27 Budget	Percent Difference
e) Collections Awaiting Deposit		9140	0.00		
2) Investments		9150	0.00		
3) Accounts Receivable		9200	0.00		
4) Due from Grantor Government		9290	0.00		
5) Due from Other Funds		9310	0.00		
6) Stores		9320	0.00		
7) Prepaid Expenditures		9330	0.00		
8) Other Current Assets		9340	0.00		
9) Lease Receivable		9380	0.00		
10) TOTAL, ASSETS			0.00		
H. DEFERRED OUTFLOWS OF RESOURCES					
1) Deferred Outflows of Resources		9490	0.00		
2) TOTAL, DEFERRED OUTFLOWS			0.00		
I. LIABILITIES					
1) Accounts Payable		9500	0.00		
2) Due to Grantor Governments		9590	0.00		
3) Due to Other Funds		9610	0.00		
4) Current Loans		9640			
5) Unearned Revenue		9650	0.00		
6) TOTAL, LIABILITIES			0.00		
J. DEFERRED INFLOWS OF RESOURCES					
1) Deferred Inflows of Resources		9690	0.00		
2) TOTAL, DEFERRED INFLOWS			0.00		
K. FUND EQUITY					
(G10 + H2) - (I6 + J2)			0.00		
LCFF SOURCES					
LCFF Transfers					
LCFF Transfers - Current Year		8091	0.00	0.00	0.0%
LCFF Transfers - Prior Years		8099	0.00	0.00	0.0%
TOTAL, LCFF SOURCES			0.00	0.00	0.0%
FEDERAL REVENUE					
Interagency Contracts Between LEAs		8285	0.00	0.00	0.0%
Pass-Through Revenues from					
Federal Sources		8287	0.00	0.00	0.0%
Career and Technical Education	3500-3599	8290	0.00	0.00	0.0%
All Other Federal Revenue	All Other	8290	542,243.00	542,243.00	0.0%
TOTAL, FEDERAL REVENUE			542,243.00	542,243.00	0.0%
OTHER STATE REVENUE					
Other State Apportionments					
All Other State Apportionments - Current Year		8311	0.00	0.00	0.0%
All Other State Apportionments - Prior Years		8319	0.00	0.00	0.0%
Pass-Through Revenues from State Sources		8587	0.00	0.00	0.0%
Adult Education Program	6391	8590	5,234,484.00	5,384,704.00	2.9%
All Other State Revenue	All Other	8590	39,554.00	39,554.00	0.0%
TOTAL, OTHER STATE REVENUE			5,274,038.00	5,424,258.00	2.8%
OTHER LOCAL REVENUE					
Other Local Revenue					
Sales					
Sale of Equipment/Supplies		8631	0.00	0.00	0.0%
Leases and Rentals		8650	0.00	0.00	0.0%
Interest		8660	100,000.00	100,000.00	0.0%
Net Increase (Decrease) in the Fair Value of Investments		8662	0.00	0.00	0.0%
Fees and Contracts					
Adult Education Fees		8671	255,904.00	255,904.00	0.0%
Interagency Services		8677	0.00	0.00	0.0%
Other Local Revenue					
All Other Local Revenue		8699	52,680.00	52,680.00	0.0%

Description	Resource Codes	Object Codes	2025-26 Estimated Actuals	2026-27 Budget	Percent Difference
Tuition		8710	0.00	0.00	0.0%
TOTAL, OTHER LOCAL REVENUE			408,584.00	408,584.00	0.0%
TOTAL, REVENUES			6,224,865.00	6,375,085.00	2.4%
CERTIFICATED SALARIES					
Certificated Teachers' Salaries		1100	2,304,857.00	2,557,489.60	11.0%
Certificated Pupil Support Salaries		1200	214,724.00	269,908.00	25.7%
Certificated Supervisors' and Administrators' Salaries		1300	497,320.00	502,072.00	1.0%
Other Certificated Salaries		1900	183,827.00	96,203.00	-47.7%
TOTAL, CERTIFICATED SALARIES			3,200,728.00	3,425,672.60	7.0%
CLASSIFIED SALARIES					
Classified Instructional Salaries		2100	183,024.00	186,774.00	2.0%
Classified Support Salaries		2200	300,337.00	295,141.00	-1.7%
Classified Supervisors' and Administrators' Salaries		2300	0.00	0.00	0.0%
Clerical, Technical and Office Salaries		2400	449,019.00	478,682.00	6.6%
Other Classified Salaries		2900	0.00	0.00	0.0%
TOTAL, CLASSIFIED SALARIES			932,380.00	960,597.00	3.0%
EMPLOYEE BENEFITS					
STRS		3101-3102	522,845.00	532,089.09	1.8%
PERS		3201-3202	255,920.00	284,321.00	11.1%
OASDI/Medicare/Alternative		3301-3302	123,274.00	132,031.93	7.1%
Health and Welfare Benefits		3401-3402	428,624.00	486,919.00	13.6%
Unemployment Insurance		3501-3502	1,991.00	2,268.91	14.0%
Workers' Compensation		3601-3602	101,805.00	101,883.61	0.1%
OPEB, Allocated		3701-3702	12,093.00	48,811.38	303.6%
OPEB, Active Employees		3751-3752	0.00	0.00	0.0%
Other Employee Benefits		3901-3902	0.00	0.00	0.0%
TOTAL, EMPLOYEE BENEFITS			1,446,552.00	1,588,324.92	9.8%
BOOKS AND SUPPLIES					
Approved Textbooks and Core Curricula Materials		4100	0.00	0.00	0.0%
Books and Other Reference Materials		4200	85,416.00	85,416.00	0.0%
Materials and Supplies		4300	223,010.00	223,010.00	0.0%
Noncapitalized Equipment		4400	305,848.00	305,848.00	0.0%
TOTAL, BOOKS AND SUPPLIES			614,274.00	614,274.00	0.0%
SERVICES AND OTHER OPERATING EXPENDITURES					
Subagreements for Services		5100	10,000.00	0.00	-100.0%
Travel and Conferences		5200	79.00	9,500.00	11,925.3%
Dues and Memberships		5300	0.00	0.00	0.0%
Insurance		5400-5450	0.00	0.00	0.0%
Operations and Housekeeping Services		5500	0.00	42,000.00	New
Rentals, Leases, Repairs, and Noncapitalized Improvements		5600	22,611.00	0.00	-100.0%
Transfers of Direct Costs		5710	0.00	0.00	0.0%
Transfers of Direct Costs - Interfund		5750	8,865.00	0.00	-100.0%
Professional/Consulting Services and Operating Expenditures		5800	658,416.00	398,598.00	-39.5%
Communications		5900	62,370.00	62,021.00	-0.6%
TOTAL, SERVICES AND OTHER OPERATING EXPENDITURES			762,341.00	512,119.00	-32.8%
CAPITAL OUTLAY					
Land		6100	0.00	0.00	0.0%
Land Improvements		6170	0.00	0.00	0.0%
Buildings and Improvements of Buildings		6200	366,433.00	0.00	-100.0%
Equipment		6400	0.00	0.00	0.0%
Equipment Replacement		6500	4,947.00	0.00	-100.0%
Lease Assets		6600	0.00	0.00	0.0%
Subscription Assets		6700	0.00	0.00	0.0%
TOTAL, CAPITAL OUTLAY			371,380.00	0.00	-100.0%
OTHER OUTGO (excluding Transfers of Indirect Costs)					
Tuition					
Tuition, Excess Costs, and/or Deficit Payments					

Description	Resource Codes	Object Codes	2025-26 Estimated Actuals	2026-27 Budget	Percent Difference
Payments to Districts or Charter Schools		7141	0.00	0.00	0.0%
Payments to County Offices		7142	0.00	0.00	0.0%
Payments to JPAs		7143	0.00	0.00	0.0%
Other Transfers Out					
Transfers of Pass-Through Revenues					
To Districts or Charter Schools		7211	0.00	0.00	0.0%
To County Offices		7212	0.00	0.00	0.0%
To JPAs		7213	0.00	0.00	0.0%
Debt Service					
Debt Service - Interest		7438	0.00	0.00	0.0%
Other Debt Service - Principal		7439	0.00	0.00	0.0%
TOTAL, OTHER OUTGO (excluding Transfers of Indirect Costs)			0.00	0.00	0.0%
OTHER OUTGO - TRANSFERS OF INDIRECT COSTS					
Transfers of Indirect Costs - Interfund		7350	324,052.00	517,138.00	59.6%
TOTAL, OTHER OUTGO - TRANSFERS OF INDIRECT COSTS			324,052.00	517,138.00	59.6%
TOTAL, EXPENDITURES			7,651,707.00	7,618,125.52	-0.4%
INTERFUND TRANSFERS					
INTERFUND TRANSFERS IN					
Other Authorized Interfund Transfers In		8919	0.00	0.00	0.0%
(a) TOTAL, INTERFUND TRANSFERS IN			0.00	0.00	0.0%
INTERFUND TRANSFERS OUT					
To: State School Building Fund/County School Facilities Fund		7613	0.00	0.00	0.0%
Other Authorized Interfund Transfers Out		7619	0.00	0.00	0.0%
(b) TOTAL, INTERFUND TRANSFERS OUT			0.00	0.00	0.0%
OTHER SOURCES/USES					
SOURCES					
Other Sources					
Transfers from Funds of Lapsed/Reorganized LEAs		8965	0.00	0.00	0.0%
Long-Term Debt Proceeds					
Proceeds from Certificates of Participation		8971	0.00	0.00	0.0%
Proceeds from Leases		8972	0.00	0.00	0.0%
Proceeds from SBITAs		8974	0.00	0.00	0.0%
All Other Financing Sources		8979	0.00	0.00	0.0%
(c) TOTAL, SOURCES			0.00	0.00	0.0%
USES					
Transfers of Funds from Lapsed/Reorganized LEAs		7651	0.00	0.00	0.0%
All Other Financing Uses		7699	0.00	0.00	0.0%
(d) TOTAL, USES			0.00	0.00	0.0%
CONTRIBUTIONS					
Contributions from Unrestricted Revenues		8980	0.00	0.00	0.0%
Contributions from Restricted Revenues		8990	0.00	0.00	0.0%
(e) TOTAL, CONTRIBUTIONS			0.00	0.00	0.0%
TOTAL, OTHER FINANCING SOURCES/USES (a - b + c - d + e)			0.00	0.00	0.0%

Description	Function Codes	Object Codes	2025-26 Estimated Actuals	2026-27 Budget	Percent Difference
A. REVENUES					
1) LCFF Sources		8010-8099	0.00	0.00	0.0%
2) Federal Revenue		8100-8299	542,243.00	542,243.00	0.0%
3) Other State Revenue		8300-8599	5,274,038.00	5,424,258.00	2.8%
4) Other Local Revenue		8600-8799	408,584.00	408,584.00	0.0%
5) TOTAL, REVENUES			6,224,865.00	6,375,085.00	2.4%
B. EXPENDITURES (Objects 1000-7999)					
1) Instruction	1000-1999		4,181,067.00	4,387,455.52	4.9%
2) Instruction - Related Services	2000-2999		2,007,333.00	1,858,616.00	-7.4%
3) Pupil Services	3000-3999		302,474.00	360,105.00	19.1%
4) Ancillary Services	4000-4999		0.00	0.00	0.0%
5) Community Services	5000-5999		0.00	0.00	0.0%
6) Enterprise	6000-6999		0.00	0.00	0.0%
7) General Administration	7000-7999		324,052.00	517,138.00	59.6%
8) Plant Services	8000-8999		836,781.00	494,811.00	-40.9%
9) Other Outgo	9000-9999	Except 7600-7699	0.00	0.00	0.0%
10) TOTAL, EXPENDITURES			7,651,707.00	7,618,125.52	-0.4%
C. EXCESS (DEFICIENCY) OF REVENUES OVER EXPENDITURES BEFORE OTHER FINANCING SOURCES AND USES (A5 - B10)			(1,426,842.00)	(1,243,040.52)	-12.9%
D. OTHER FINANCING SOURCES/USES					
1) Interfund Transfers					
a) Transfers In		8900-8929	0.00	0.00	0.0%
b) Transfers Out		7600-7629	0.00	0.00	0.0%
2) Other Sources/Uses					
a) Sources		8930-8979	0.00	0.00	0.0%
b) Uses		7630-7699	0.00	0.00	0.0%
3) Contributions		8980-8999	0.00	0.00	0.0%
4) TOTAL, OTHER FINANCING SOURCES/USES			0.00	0.00	0.0%
E. NET INCREASE (DECREASE) IN FUND BALANCE (C + D4)			(1,426,842.00)	(1,243,040.52)	-12.9%
F. FUND BALANCE, RESERVES					
1) Beginning Fund Balance					
a) As of July 1 - Unaudited		9791	3,525,529.77	2,098,687.77	-40.5%
b) Audit Adjustments		9793	0.00	0.00	0.0%
c) As of July 1 - Audited (F1a + F1b)			3,525,529.77	2,098,687.77	-40.5%
d) Other Restatements		9795	0.00	0.00	0.0%
e) Adjusted Beginning Balance (F1c + F1d)			3,525,529.77	2,098,687.77	-40.5%
2) Ending Balance, June 30 (E + F1e)			2,098,687.77	855,647.25	-59.2%
Components of Ending Fund Balance					
a) Nonspendable					
Revolving Cash		9711	0.00	0.00	0.0%
Stores		9712	0.00	0.00	0.0%
Prepaid Items		9713	0.00	0.00	0.0%
All Others		9719	0.00	0.00	0.0%
b) Restricted		9740	316,598.03	0.51	-100.0%
c) Committed					
Stabilization Arrangements		9750	0.00	0.00	0.0%
Other Commitments (by Resource/Object)		9760	0.00	0.00	0.0%
d) Assigned					
Other Assignments (by Resource/Object)		9780	1,782,089.74	855,646.74	-52.0%
e) Unassigned/Unappropriated					
Reserve for Economic Uncertainties		9789	0.00	0.00	0.0%
Unassigned/Unappropriated Amount		9790	0.00	0.00	0.0%

Resource	Description	2025-26 Estimated Actuals	2026-27 Budget
6391	Adult Education Program	316,598.03	.51
Total, Restricted Balance		316,598.03	.51

Description	Resource Codes	Object Codes	2025-26 Estimated Actuals	2026-27 Budget	Percent Difference
A. REVENUES					
1) LCFF Sources		8010-8099	0.00	0.00	0.0%
2) Federal Revenue		8100-8299	216,432.00	216,432.00	0.0%
3) Other State Revenue		8300-8599	1,057,403.00	1,159,614.00	9.7%
4) Other Local Revenue		8600-8799	3,454,933.00	3,454,933.00	0.0%
5) TOTAL, REVENUES			4,728,768.00	4,830,979.00	2.2%
B. EXPENDITURES					
1) Certificated Salaries		1000-1999	1,029,982.00	1,104,227.00	7.2%
2) Classified Salaries		2000-2999	806,706.00	803,555.00	-0.4%
3) Employee Benefits		3000-3999	907,845.00	977,907.00	7.7%
4) Books and Supplies		4000-4999	128,406.00	128,406.00	0.0%
5) Services and Other Operating Expenditures		5000-5999	236,163.00	243,302.00	3.0%
6) Capital Outlay		6000-6999	0.00	0.00	0.0%
7) Other Outgo (excluding Transfers of Indirect Costs)		7100-7299, 7400-7499	0.00	0.00	0.0%
8) Other Outgo - Transfers of Indirect Costs		7300-7399	189,626.00	308,334.00	62.6%
9) TOTAL, EXPENDITURES			3,298,728.00	3,565,731.00	8.1%
C. EXCESS (DEFICIENCY) OF REVENUES OVER EXPENDITURES BEFORE OTHER FINANCING SOURCES AND USES (A5 - B9)			1,430,040.00	1,265,248.00	-11.5%
D. OTHER FINANCING SOURCES/USES					
1) Interfund Transfers					
a) Transfers In		8900-8929	0.00	0.00	0.0%
b) Transfers Out		7600-7629	0.00	0.00	0.0%
2) Other Sources/Uses					
a) Sources		8930-8979	0.00	0.00	0.0%
b) Uses		7630-7699	0.00	0.00	0.0%
3) Contributions		8980-8999	0.00	0.00	0.0%
4) TOTAL, OTHER FINANCING SOURCES/USES			0.00	0.00	0.0%
E. NET INCREASE (DECREASE) IN FUND BALANCE (C + D4)			1,430,040.00	1,265,248.00	-11.5%
F. FUND BALANCE, RESERVES					
1) Beginning Fund Balance					
a) As of July 1 - Unaudited		9791	1,267,878.47	2,697,918.47	112.8%
b) Audit Adjustments		9793	0.00	0.00	0.0%
c) As of July 1 - Audited (F1a + F1b)			1,267,878.47	2,697,918.47	112.8%
d) Other Restatements		9795	0.00	0.00	0.0%
e) Adjusted Beginning Balance (F1c + F1d)			1,267,878.47	2,697,918.47	112.8%
2) Ending Balance, June 30 (E + F1e)			2,697,918.47	3,963,166.47	46.9%
Components of Ending Fund Balance					
a) Nonspendable					
Revolving Cash		9711	0.00	0.00	0.0%
Stores		9712	0.00	0.00	0.0%
Prepaid Items		9713	0.00	0.00	0.0%
All Others		9719	0.00	0.00	0.0%
b) Restricted		9740	2,675,017.47	3,917,364.47	46.4%
c) Committed					
Stabilization Arrangements		9750	0.00	0.00	0.0%
Other Commitments		9760	0.00	0.00	0.0%
d) Assigned					
Other Assignments		9780	22,901.00	45,802.00	100.0%
e) Unassigned/Unappropriated Reserve for Economic Uncertainties		9789	0.00	0.00	0.0%
Unassigned/Unappropriated Amount		9790	0.00	0.00	0.0%
G. ASSETS					
1) Cash					
a) in County Treasury		9110	0.00		
1) Fair Value Adjustment to Cash in County Treasury		9111	0.00		
b) in Banks		9120	0.00		
c) in Revolving Cash Account		9130	0.00		
d) with Fiscal Agent/Trustee		9135	0.00		

Description	Resource Codes	Object Codes	2025-26 Estimated Actuals	2026-27 Budget	Percent Difference
e) Collections Awaiting Deposit		9140	0.00		
2) Investments		9150	0.00		
3) Accounts Receivable		9200	0.00		
4) Due from Grantor Government		9290	0.00		
5) Due from Other Funds		9310	0.00		
6) Stores		9320	0.00		
7) Prepaid Expenditures		9330	0.00		
8) Other Current Assets		9340	0.00		
9) Lease Receivable		9380	0.00		
10) TOTAL, ASSETS			0.00		
H. DEFERRED OUTFLOWS OF RESOURCES					
1) Deferred Outflows of Resources		9490	0.00		
2) TOTAL, DEFERRED OUTFLOWS			0.00		
I. LIABILITIES					
1) Accounts Payable		9500	0.00		
2) Due to Grantor Governments		9590	0.00		
3) Due to Other Funds		9610	0.00		
4) Current Loans		9640			
5) Unearned Revenue		9650	0.00		
6) TOTAL, LIABILITIES			0.00		
J. DEFERRED INFLOWS OF RESOURCES					
1) Deferred Inflows of Resources		9690	0.00		
2) TOTAL, DEFERRED INFLOWS			0.00		
K. FUND EQUITY					
(G10 + H2) - (I6 + J2)			0.00		
FEDERAL REVENUE					
Child Nutrition Programs		8220	2,892.00	2,892.00	0.0%
Interagency Contracts Between LEAs		8285	0.00	0.00	0.0%
Title I, Part A, Basic	3010	8290	0.00	0.00	0.0%
All Other Federal Revenue	All Other	8290	213,540.00	213,540.00	0.0%
TOTAL, FEDERAL REVENUE			216,432.00	216,432.00	0.0%
OTHER STATE REVENUE					
Child Nutrition Programs		8520	79.00	79.00	0.0%
Child Development Apportionments		8530	0.00	0.00	0.0%
Pass-Through Revenues from State Sources		8587	0.00	0.00	0.0%
Expanded Learning Opportunities Program (ELO-P)	2600	8590	0.00	0.00	0.0%
State Preschool	6105	8590	614,542.00	716,753.00	16.6%
Arts and Music in Schools (Prop 28)	6770	8590	0.00	0.00	0.0%
All Other State Revenue	All Other	8590	442,782.00	442,782.00	0.0%
TOTAL, OTHER STATE REVENUE			1,057,403.00	1,159,614.00	9.7%
OTHER LOCAL REVENUE					
Other Local Revenue					
Sales					
Sale of Equipment/Supplies		8631	0.00	0.00	0.0%
Food Service Sales		8634	0.00	0.00	0.0%
Interest		8660	46,728.00	46,728.00	0.0%
Net Increase (Decrease) in the Fair Value of Investments		8662	0.00	0.00	0.0%
Fees and Contracts					
Child Development Parent Fees		8673	3,408,183.00	3,408,183.00	0.0%
Interagency Services		8677	0.00	0.00	0.0%
All Other Fees and Contracts		8689	0.00	0.00	0.0%
Other Local Revenue					
All Other Local Revenue		8699	22.00	22.00	0.0%
All Other Transfers In from All Others		8799	0.00	0.00	0.0%
TOTAL, OTHER LOCAL REVENUE			3,454,933.00	3,454,933.00	0.0%
TOTAL, REVENUES			4,728,768.00	4,830,979.00	2.2%
CERTIFICATED SALARIES					

Description	Resource Codes	Object Codes	2025-26 Estimated Actuals	2026-27 Budget	Percent Difference
Certificated Teachers' Salaries		1100	977,275.00	1,040,116.00	6.4%
Certificated Pupil Support Salaries		1200	11,249.00	21,595.00	92.0%
Certificated Supervisors' and Administrators' Salaries		1300	41,458.00	42,516.00	2.6%
Other Certificated Salaries		1900	0.00	0.00	0.0%
TOTAL, CERTIFICATED SALARIES			1,029,982.00	1,104,227.00	7.2%
CLASSIFIED SALARIES					
Classified Instructional Salaries		2100	632,053.00	613,637.00	-2.9%
Classified Support Salaries		2200	16,210.00	16,450.00	1.5%
Classified Supervisors' and Administrators' Salaries		2300	0.00	0.00	0.0%
Clerical, Technical and Office Salaries		2400	152,128.00	172,428.00	13.3%
Other Classified Salaries		2900	6,315.00	1,040.00	-83.5%
TOTAL, CLASSIFIED SALARIES			806,706.00	803,555.00	-0.4%
EMPLOYEE BENEFITS					
STRS		3101-3102	92,824.00	96,888.00	4.4%
PERS		3201-3202	306,676.00	326,002.00	6.3%
OASDI/Medicare/Alternative		3301-3302	96,138.00	102,544.00	6.7%
Health and Welfare Benefits		3401-3402	361,743.00	385,399.00	6.5%
Unemployment Insurance		3501-3502	831.00	894.00	7.6%
Workers' Compensation		3601-3602	44,290.00	42,865.00	-3.2%
OPEB, Allocated		3701-3702	5,343.00	23,315.00	336.4%
OPEB, Active Employees		3751-3752	0.00	0.00	0.0%
Other Employee Benefits		3901-3902	0.00	0.00	0.0%
TOTAL, EMPLOYEE BENEFITS			907,845.00	977,907.00	7.7%
BOOKS AND SUPPLIES					
Approved Textbooks and Core Curricula Materials		4100	0.00	0.00	0.0%
Books and Other Reference Materials		4200	0.00	0.00	0.0%
Materials and Supplies		4300	84,322.00	84,322.00	0.0%
Noncapitalized Equipment		4400	0.00	0.00	0.0%
Food		4700	44,084.00	44,084.00	0.0%
TOTAL, BOOKS AND SUPPLIES			128,406.00	128,406.00	0.0%
SERVICES AND OTHER OPERATING EXPENDITURES					
Subagreements for Services		5100	0.00	0.00	0.0%
Travel and Conferences		5200	0.00	0.00	0.0%
Dues and Memberships		5300	0.00	0.00	0.0%
Insurance		5400-5450	0.00	0.00	0.0%
Operations and Housekeeping Services		5500	0.00	0.00	0.0%
Rentals, Leases, Repairs, and Noncapitalized Improvements		5600	0.00	0.00	0.0%
Transfers of Direct Costs		5710	0.00	0.00	0.0%
Transfers of Direct Costs - Interfund		5750	130.00	0.00	-100.0%
Professional/Consulting Services and Operating Expenditures		5800	235,937.00	243,204.00	3.1%
Communications		5900	96.00	98.00	2.1%
TOTAL, SERVICES AND OTHER OPERATING EXPENDITURES			236,163.00	243,302.00	3.0%
CAPITAL OUTLAY					
Land		6100	0.00	0.00	0.0%
Land Improvements		6170	0.00	0.00	0.0%
Buildings and Improvements of Buildings		6200	0.00	0.00	0.0%
Equipment		6400	0.00	0.00	0.0%
Equipment Replacement		6500	0.00	0.00	0.0%
Lease Assets		6600	0.00	0.00	0.0%
Subscription Assets		6700	0.00	0.00	0.0%
TOTAL, CAPITAL OUTLAY			0.00	0.00	0.0%
OTHER OUTGO (excluding Transfers of Indirect Costs)					
Other Transfers Out					
All Other Transfers Out to All Others		7299	0.00	0.00	0.0%
Debt Service					
Debt Service - Interest		7438	0.00	0.00	0.0%
Other Debt Service - Principal		7439	0.00	0.00	0.0%

Description	Resource Codes	Object Codes	2025-26 Estimated Actuals	2026-27 Budget	Percent Difference
TOTAL, OTHER OUTGO (excluding Transfers of Indirect Costs)			0.00	0.00	0.0%
OTHER OUTGO - TRANSFERS OF INDIRECT COSTS					
Transfers of Indirect Costs - Interfund		7350	189,626.00	308,334.00	62.6%
TOTAL, OTHER OUTGO - TRANSFERS OF INDIRECT COSTS			189,626.00	308,334.00	62.6%
TOTAL, EXPENDITURES			3,298,728.00	3,565,731.00	8.1%
INTERFUND TRANSFERS					
INTERFUND TRANSFERS IN					
From: General Fund		8911	0.00	0.00	0.0%
Other Authorized Interfund Transfers In		8919	0.00	0.00	0.0%
(a) TOTAL, INTERFUND TRANSFERS IN			0.00	0.00	0.0%
INTERFUND TRANSFERS OUT					
Other Authorized Interfund Transfers Out		7619	0.00	0.00	0.0%
(b) TOTAL, INTERFUND TRANSFERS OUT			0.00	0.00	0.0%
OTHER SOURCES/USES					
SOURCES					
Other Sources					
Transfers from Funds of Lapsed/Reorganized LEAs		8965	0.00	0.00	0.0%
Long-Term Debt Proceeds					
Proceeds from Certificates of Participation		8971	0.00	0.00	0.0%
Proceeds from Leases		8972	0.00	0.00	0.0%
Proceeds from SBITAs		8974	0.00	0.00	0.0%
All Other Financing Sources		8979	0.00	0.00	0.0%
(c) TOTAL, SOURCES			0.00	0.00	0.0%
USES					
Transfers of Funds from Lapsed/Reorganized LEAs		7651	0.00	0.00	0.0%
All Other Financing Uses		7699	0.00	0.00	0.0%
(d) TOTAL, USES			0.00	0.00	0.0%
CONTRIBUTIONS					
Contributions from Unrestricted Revenues		8980	0.00	0.00	0.0%
Contributions from Restricted Revenues		8990	0.00	0.00	0.0%
(e) TOTAL, CONTRIBUTIONS			0.00	0.00	0.0%
TOTAL, OTHER FINANCING SOURCES/USES (a - b + c - d + e)			0.00	0.00	0.0%

Description	Function Codes	Object Codes	2025-26 Estimated Actuals	2026-27 Budget	Percent Difference
A. REVENUES					
1) LCFF Sources		8010-8099	0.00	0.00	0.0%
2) Federal Revenue		8100-8299	216,432.00	216,432.00	0.0%
3) Other State Revenue		8300-8599	1,057,403.00	1,159,614.00	9.7%
4) Other Local Revenue		8600-8799	3,454,933.00	3,454,933.00	0.0%
5) TOTAL, REVENUES			4,728,768.00	4,830,979.00	2.2%
B. EXPENDITURES (Objects 1000-7999)					
1) Instruction	1000-1999		2,734,587.00	2,822,904.00	3.2%
2) Instruction - Related Services	2000-2999		275,471.00	321,541.00	16.7%
3) Pupil Services	3000-3999		57,750.00	70,637.00	22.3%
4) Ancillary Services	4000-4999		0.00	0.00	0.0%
5) Community Services	5000-5999		0.00	0.00	0.0%
6) Enterprise	6000-6999		0.00	0.00	0.0%
7) General Administration	7000-7999		189,626.00	308,334.00	62.6%
8) Plant Services	8000-8999		41,294.00	42,315.00	2.5%
9) Other Outgo	9000-9999	Except 7600-7699	0.00	0.00	0.0%
10) TOTAL, EXPENDITURES			3,298,728.00	3,565,731.00	8.1%
C. EXCESS (DEFICIENCY) OF REVENUES OVER EXPENDITURES BEFORE OTHER FINANCING SOURCES AND USES (A5 - B10)			1,430,040.00	1,265,248.00	-11.5%
D. OTHER FINANCING SOURCES/USES					
1) Interfund Transfers					
a) Transfers In		8900-8929	0.00	0.00	0.0%
b) Transfers Out		7600-7629	0.00	0.00	0.0%
2) Other Sources/Uses					
a) Sources		8930-8979	0.00	0.00	0.0%
b) Uses		7630-7699	0.00	0.00	0.0%
3) Contributions		8980-8999	0.00	0.00	0.0%
4) TOTAL, OTHER FINANCING SOURCES/USES			0.00	0.00	0.0%
E. NET INCREASE (DECREASE) IN FUND BALANCE (C + D4)			1,430,040.00	1,265,248.00	-11.5%
F. FUND BALANCE, RESERVES					
1) Beginning Fund Balance					
a) As of July 1 - Unaudited		9791	1,267,878.47	2,697,918.47	112.8%
b) Audit Adjustments		9793	0.00	0.00	0.0%
c) As of July 1 - Audited (F1a + F1b)			1,267,878.47	2,697,918.47	112.8%
d) Other Restatements		9795	0.00	0.00	0.0%
e) Adjusted Beginning Balance (F1c + F1d)			1,267,878.47	2,697,918.47	112.8%
2) Ending Balance, June 30 (E + F1e)			2,697,918.47	3,963,166.47	46.9%
Components of Ending Fund Balance					
a) Nonspendable					
Revolving Cash		9711	0.00	0.00	0.0%
Stores		9712	0.00	0.00	0.0%
Prepaid Items		9713	0.00	0.00	0.0%
All Others		9719	0.00	0.00	0.0%
b) Restricted		9740	2,675,017.47	3,917,364.47	46.4%
c) Committed					
Stabilization Arrangements		9750	0.00	0.00	0.0%
Other Commitments (by Resource/Object)		9760	0.00	0.00	0.0%
d) Assigned					
Other Assignments (by Resource/Object)		9780	22,901.00	45,802.00	100.0%
e) Unassigned/Unappropriated					
Reserve for Economic Uncertainties		9789	0.00	0.00	0.0%
Unassigned/Unappropriated Amount		9790	0.00	0.00	0.0%

Resource	Description	2025-26 Estimated Actuals	2026-27 Budget
5160	Child Care and Development Programs Administered by California Department of Social Services (Federal Funds)	531,718.39	724,521.39
5320	Child Nutrition: Child Care Food Program (CCFP) Claims-Centers and Family Day Care Homes (Meal Reimbursements)	2,971.00	5,942.00
6129	Early Education: Center-Based Reserve Account for Department of Social Services Programs	20,522.10	20,522.10
7810	Other Restricted State	660,777.65	1,103,559.65
9010	Other Restricted Local	1,459,028.33	2,062,819.33
Total, Restricted Balance		2,675,017.47	3,917,364.47

Description	Resource Codes	Object Codes	2025-26 Estimated Actuals	2026-27 Budget	Percent Difference
A. REVENUES					
1) LCFF Sources		8010-8099	0.00	0.00	0.0%
2) Federal Revenue		8100-8299	2,748,735.00	2,748,735.00	0.0%
3) Other State Revenue		8300-8599	4,641,654.00	4,641,654.00	0.0%
4) Other Local Revenue		8600-8799	536,659.00	536,659.00	0.0%
5) TOTAL, REVENUES			7,927,048.00	7,927,048.00	0.0%
B. EXPENDITURES					
1) Certificated Salaries		1000-1999	0.00	0.00	0.0%
2) Classified Salaries		2000-2999	2,394,803.00	2,772,035.00	15.8%
3) Employee Benefits		3000-3999	963,217.00	1,276,985.63	32.6%
4) Books and Supplies		4000-4999	3,252,527.00	3,252,527.00	0.0%
5) Services and Other Operating Expenditures		5000-5999	275,434.00	283,271.00	2.8%
6) Capital Outlay		6000-6999	597,012.00	148,650.00	-75.1%
7) Other Outgo (excluding Transfers of Indirect Costs)		7100-7299, 7400-7499	0.00	0.00	0.0%
8) Other Outgo - Transfers of Indirect Costs		7300-7399	248,753.00	262,291.00	5.4%
9) TOTAL, EXPENDITURES			7,731,746.00	7,995,759.63	3.4%
C. EXCESS (DEFICIENCY) OF REVENUES OVER EXPENDITURES BEFORE OTHER FINANCING SOURCES AND USES (A5 - B9)			195,302.00	(68,711.63)	-135.2%
D. OTHER FINANCING SOURCES/USES					
1) Interfund Transfers					
a) Transfers In		8900-8929	0.00	0.00	0.0%
b) Transfers Out		7600-7629	0.00	0.00	0.0%
2) Other Sources/Uses					
a) Sources		8930-8979	0.00	0.00	0.0%
b) Uses		7630-7699	0.00	0.00	0.0%
3) Contributions		8980-8999	0.00	0.00	0.0%
4) TOTAL, OTHER FINANCING SOURCES/USES			0.00	0.00	0.0%
E. NET INCREASE (DECREASE) IN FUND BALANCE (C + D4)			195,302.00	(68,711.63)	-135.2%
F. FUND BALANCE, RESERVES					
1) Beginning Fund Balance					
a) As of July 1 - Unaudited		9791	6,922,214.78	7,117,516.78	2.8%
b) Audit Adjustments		9793	0.00	0.00	0.0%
c) As of July 1 - Audited (F1a + F1b)			6,922,214.78	7,117,516.78	2.8%
d) Other Restatements		9795	0.00	0.00	0.0%
e) Adjusted Beginning Balance (F1c + F1d)			6,922,214.78	7,117,516.78	2.8%
2) Ending Balance, June 30 (E + F1e)			7,117,516.78	7,048,805.15	-1.0%
Components of Ending Fund Balance					
a) Nonspendable					
Revolving Cash		9711	0.00	0.00	0.0%
Stores		9712	0.00	0.00	0.0%
Prepaid Items		9713	0.00	0.00	0.0%
All Others		9719	0.00	0.00	0.0%
b) Restricted		9740	7,115,861.78	7,045,495.15	-1.0%
c) Committed					
Stabilization Arrangements		9750	0.00	0.00	0.0%
Other Commitments		9760	0.00	0.00	0.0%
d) Assigned					
Other Assignments		9780	1,655.00	3,310.00	100.0%
e) Unassigned/Unappropriated Reserve for Economic Uncertainties		9789	0.00	0.00	0.0%
Unassigned/Unappropriated Amount		9790	0.00	0.00	0.0%
G. ASSETS					
1) Cash					
a) in County Treasury		9110	0.00		
1) Fair Value Adjustment to Cash in County Treasury		9111	0.00		
b) in Banks		9120	0.00		
c) in Revolving Cash Account		9130	0.00		
d) with Fiscal Agent/Trustee		9135	0.00		

Description	Resource Codes	Object Codes	2025-26 Estimated Actuals	2026-27 Budget	Percent Difference
e) Collections Awaiting Deposit		9140	0.00		
2) Investments		9150	0.00		
3) Accounts Receivable		9200	0.00		
4) Due from Grantor Government		9290	0.00		
5) Due from Other Funds		9310	0.00		
6) Stores		9320	0.00		
7) Prepaid Expenditures		9330	0.00		
8) Other Current Assets		9340	0.00		
9) Lease Receivable		9380	0.00		
10) TOTAL, ASSETS			0.00		
H. DEFERRED OUTFLOWS OF RESOURCES					
1) Deferred Outflows of Resources		9490	0.00		
2) TOTAL, DEFERRED OUTFLOWS			0.00		
I. LIABILITIES					
1) Accounts Payable		9500	0.00		
2) Due to Grantor Governments		9590	0.00		
3) Due to Other Funds		9610	0.00		
4) Current Loans		9640			
5) Unearned Revenue		9650	0.00		
6) TOTAL, LIABILITIES			0.00		
J. DEFERRED INFLOWS OF RESOURCES					
1) Deferred Inflows of Resources		9690	0.00		
2) TOTAL, DEFERRED INFLOWS			0.00		
K. FUND EQUITY					
(G10 + H2) - (I6 + J2)			0.00		
FEDERAL REVENUE					
Child Nutrition Programs		8220	2,748,735.00	2,748,735.00	0.0%
Donated Food Commodities		8221	0.00	0.00	0.0%
All Other Federal Revenue		8290	0.00	0.00	0.0%
TOTAL, FEDERAL REVENUE			2,748,735.00	2,748,735.00	0.0%
OTHER STATE REVENUE					
Child Nutrition Programs		8520	4,641,654.00	4,641,654.00	0.0%
All Other State Revenue		8590	0.00	0.00	0.0%
TOTAL, OTHER STATE REVENUE			4,641,654.00	4,641,654.00	0.0%
OTHER LOCAL REVENUE					
Other Local Revenue					
Sales					
Sale of Equipment/Supplies		8631	0.00	0.00	0.0%
Food Service Sales		8634	440,673.00	440,673.00	0.0%
Leases and Rentals		8650	0.00	0.00	0.0%
Interest		8660	94,331.00	94,331.00	0.0%
Net Increase (Decrease) in the Fair Value of Investments		8662	0.00	0.00	0.0%
Fees and Contracts					
Interagency Services		8677	0.00	0.00	0.0%
Other Local Revenue					
All Other Local Revenue		8699	1,655.00	1,655.00	0.0%
TOTAL, OTHER LOCAL REVENUE			536,659.00	536,659.00	0.0%
TOTAL, REVENUES			7,927,048.00	7,927,048.00	0.0%
CERTIFICATED SALARIES					
Certificated Supervisors' and Administrators' Salaries		1300	0.00	0.00	0.0%
Other Certificated Salaries		1900	0.00	0.00	0.0%
TOTAL, CERTIFICATED SALARIES			0.00	0.00	0.0%
CLASSIFIED SALARIES					
Classified Support Salaries		2200	1,729,907.00	1,778,807.00	2.8%
Classified Supervisors' and Administrators' Salaries		2300	522,414.00	853,378.00	63.4%
Clerical, Technical and Office Salaries		2400	105,126.00	101,371.00	-3.6%
Other Classified Salaries		2900	37,356.00	38,479.00	3.0%

Description	Resource Codes	Object Codes	2025-26 Estimated Actuals	2026-27 Budget	Percent Difference
TOTAL, CLASSIFIED SALARIES			2,394,803.00	2,772,035.00	15.8%
EMPLOYEE BENEFITS					
STRS		3101-3102	0.00	0.00	0.0%
PERS		3201-3202	488,965.00	616,048.81	26.0%
OASDI/Medicare/Alternative		3301-3302	172,800.00	199,038.58	15.2%
Health and Welfare Benefits		3401-3402	233,077.00	353,559.00	51.7%
Unemployment Insurance		3501-3502	1,185.00	3,081.77	160.1%
Workers' Compensation		3601-3602	60,398.00	68,949.33	14.2%
OPEB, Allocated		3701-3702	6,792.00	36,308.14	434.6%
OPEB, Active Employees		3751-3752	0.00	0.00	0.0%
Other Employee Benefits		3901-3902	0.00	0.00	0.0%
TOTAL, EMPLOYEE BENEFITS			963,217.00	1,276,985.63	32.6%
BOOKS AND SUPPLIES					
Books and Other Reference Materials		4200	0.00	0.00	0.0%
Materials and Supplies		4300	327,396.00	327,396.00	0.0%
Noncapitalized Equipment		4400	51,300.00	51,300.00	0.0%
Food		4700	2,873,831.00	2,873,831.00	0.0%
TOTAL, BOOKS AND SUPPLIES			3,252,527.00	3,252,527.00	0.0%
SERVICES AND OTHER OPERATING EXPENDITURES					
Subagreements for Services		5100	0.00	0.00	0.0%
Travel and Conferences		5200	1,560.00	1,605.00	2.9%
Dues and Memberships		5300	1,767.00	1,821.00	3.1%
Insurance		5400-5450	0.00	0.00	0.0%
Operations and Housekeeping Services		5500	22,769.00	23,471.00	3.1%
Rentals, Leases, Repairs, and Noncapitalized Improvements		5600	127,888.00	131,827.00	3.1%
Transfers of Direct Costs		5710	0.00	0.00	0.0%
Transfers of Direct Costs - Interfund		5750	624.00	0.00	-100.0%
Professional/Consulting Services and Operating Expenditures		5800	120,549.00	124,262.00	3.1%
Communications		5900	277.00	285.00	2.9%
TOTAL, SERVICES AND OTHER OPERATING EXPENDITURES			275,434.00	283,271.00	2.8%
CAPITAL OUTLAY					
Buildings and Improvements of Buildings		6200	2,413.00	0.00	-100.0%
Equipment		6400	503,372.00	125,843.00	-75.0%
Equipment Replacement		6500	91,227.00	22,807.00	-75.0%
Lease Assets		6600	0.00	0.00	0.0%
Subscription Assets		6700	0.00	0.00	0.0%
TOTAL, CAPITAL OUTLAY			597,012.00	148,650.00	-75.1%
OTHER OUTGO (excluding Transfers of Indirect Costs)					
Debt Service					
Debt Service - Interest		7438	0.00	0.00	0.0%
Other Debt Service - Principal		7439	0.00	0.00	0.0%
TOTAL, OTHER OUTGO (excluding Transfers of Indirect Costs)			0.00	0.00	0.0%
OTHER OUTGO - TRANSFERS OF INDIRECT COSTS					
Transfers of Indirect Costs - Interfund		7350	248,753.00	262,291.00	5.4%
TOTAL, OTHER OUTGO - TRANSFERS OF INDIRECT COSTS			248,753.00	262,291.00	5.4%
TOTAL, EXPENDITURES			7,731,746.00	7,995,759.63	3.4%
INTERFUND TRANSFERS					
INTERFUND TRANSFERS IN					
From: General Fund		8916	0.00	0.00	0.0%
Other Authorized Interfund Transfers In		8919	0.00	0.00	0.0%
(a) TOTAL, INTERFUND TRANSFERS IN			0.00	0.00	0.0%
INTERFUND TRANSFERS OUT					
Other Authorized Interfund Transfers Out		7619	0.00	0.00	0.0%
(b) TOTAL, INTERFUND TRANSFERS OUT			0.00	0.00	0.0%
OTHER SOURCES/USES					
SOURCES					
Other Sources					

Description	Resource Codes	Object Codes	2025-26 Estimated Actuals	2026-27 Budget	Percent Difference
Transfers from Funds of Lapsed/Reorganized LEAs		8965	0.00	0.00	0.0%
Long-Term Debt Proceeds					
Proceeds from Leases		8972	0.00	0.00	0.0%
Proceeds from SBITAs		8974	0.00	0.00	0.0%
All Other Financing Sources		8979	0.00	0.00	0.0%
(c) TOTAL, SOURCES			0.00	0.00	0.0%
USES					
Transfers of Funds from Lapsed/Reorganized LEAs		7651	0.00	0.00	0.0%
All Other Financing Uses		7699	0.00	0.00	0.0%
(d) TOTAL, USES			0.00	0.00	0.0%
CONTRIBUTIONS					
Contributions from Unrestricted Revenues		8980	0.00	0.00	0.0%
Contributions from Restricted Revenues		8990	0.00	0.00	0.0%
(e) TOTAL, CONTRIBUTIONS			0.00	0.00	0.0%
TOTAL, OTHER FINANCING SOURCES/USES (a - b + c - d + e)			0.00	0.00	0.0%

Description	Function Codes	Object Codes	2025-26 Estimated Actuals	2026-27 Budget	Percent Difference
A. REVENUES					
1) LCFF Sources		8010-8099	0.00	0.00	0.0%
2) Federal Revenue		8100-8299	2,748,735.00	2,748,735.00	0.0%
3) Other State Revenue		8300-8599	4,641,654.00	4,641,654.00	0.0%
4) Other Local Revenue		8600-8799	536,659.00	536,659.00	0.0%
5) TOTAL, REVENUES			7,927,048.00	7,927,048.00	0.0%
B. EXPENDITURES (Objects 1000-7999)					
1) Instruction	1000-1999		0.00	0.00	0.0%
2) Instruction - Related Services	2000-2999		0.00	0.00	0.0%
3) Pupil Services	3000-3999		7,457,811.00	7,709,997.63	3.4%
4) Ancillary Services	4000-4999		0.00	0.00	0.0%
5) Community Services	5000-5999		0.00	0.00	0.0%
6) Enterprise	6000-6999		0.00	0.00	0.0%
7) General Administration	7000-7999		248,753.00	262,291.00	5.4%
8) Plant Services	8000-8999		25,182.00	23,471.00	-6.8%
9) Other Outgo	9000-9999	Except 7600-7699	0.00	0.00	0.0%
10) TOTAL, EXPENDITURES			7,731,746.00	7,995,759.63	3.4%
C. EXCESS (DEFICIENCY) OF REVENUES OVER EXPENDITURES BEFORE OTHER FINANCING SOURCES AND USES (A5 - B10)			195,302.00	(68,711.63)	-135.2%
D. OTHER FINANCING SOURCES/USES					
1) Interfund Transfers					
a) Transfers In		8900-8929	0.00	0.00	0.0%
b) Transfers Out		7600-7629	0.00	0.00	0.0%
2) Other Sources/Uses					
a) Sources		8930-8979	0.00	0.00	0.0%
b) Uses		7630-7699	0.00	0.00	0.0%
3) Contributions		8980-8999	0.00	0.00	0.0%
4) TOTAL, OTHER FINANCING SOURCES/USES			0.00	0.00	0.0%
E. NET INCREASE (DECREASE) IN FUND BALANCE (C + D4)			195,302.00	(68,711.63)	-135.2%
F. FUND BALANCE, RESERVES					
1) Beginning Fund Balance					
a) As of July 1 - Unaudited		9791	6,922,214.78	7,117,516.78	2.8%
b) Audit Adjustments		9793	0.00	0.00	0.0%
c) As of July 1 - Audited (F1a + F1b)			6,922,214.78	7,117,516.78	2.8%
d) Other Restatements		9795	0.00	0.00	0.0%
e) Adjusted Beginning Balance (F1c + F1d)			6,922,214.78	7,117,516.78	2.8%
2) Ending Balance, June 30 (E + F1e)			7,117,516.78	7,048,805.15	-1.0%
Components of Ending Fund Balance					
a) Nonspendable					
Revolving Cash		9711	0.00	0.00	0.0%
Stores		9712	0.00	0.00	0.0%
Prepaid Items		9713	0.00	0.00	0.0%
All Others		9719	0.00	0.00	0.0%
b) Restricted		9740	7,115,861.78	7,045,495.15	-1.0%
c) Committed					
Stabilization Arrangements		9750	0.00	0.00	0.0%
Other Commitments (by Resource/Object)		9760	0.00	0.00	0.0%
d) Assigned					
Other Assignments (by Resource/Object)		9780	1,655.00	3,310.00	100.0%
e) Unassigned/Unappropriated					
Reserve for Economic Uncertainties		9789	0.00	0.00	0.0%
Unassigned/Unappropriated Amount		9790	0.00	0.00	0.0%

Resource	Description	2025-26 Estimated Actuals	2026-27 Budget
5310	Child Nutrition: School Programs (e.g., School Lunch, School Breakfast, Milk, Pregnant & Lactating Students)	6,899,000.28	6,828,633.65
7033	Child Nutrition: School Food Best Practices Apportionment	216,861.50	216,861.50
Total, Restricted Balance		7,115,861.78	7,045,495.15

Description	Resource Codes	Object Codes	2025-26 Estimated Actuals	2026-27 Budget	Percent Difference
A. REVENUES					
1) LCFF Sources		8010-8099	0.00	0.00	0.0%
2) Federal Revenue		8100-8299	0.00	0.00	0.0%
3) Other State Revenue		8300-8599	0.00	0.00	0.0%
4) Other Local Revenue		8600-8799	1,997,446.00	1,347.00	-99.9%
5) TOTAL, REVENUES			1,997,446.00	1,347.00	-99.9%
B. EXPENDITURES					
1) Certificated Salaries		1000-1999	0.00	0.00	0.0%
2) Classified Salaries		2000-2999	0.00	0.00	0.0%
3) Employee Benefits		3000-3999	0.00	0.00	0.0%
4) Books and Supplies		4000-4999	0.00	0.00	0.0%
5) Services and Other Operating Expenditures		5000-5999	68,184.00	0.00	-100.0%
6) Capital Outlay		6000-6999	0.00	960,000.00	New
7) Other Outgo (excluding Transfers of Indirect Costs)		7100-7299, 7400-7499	0.00	0.00	0.0%
8) Other Outgo - Transfers of Indirect Costs		7300-7399	0.00	0.00	0.0%
9) TOTAL, EXPENDITURES			68,184.00	960,000.00	1,308.0%
C. EXCESS (DEFICIENCY) OF REVENUES OVER EXPENDITURES BEFORE OTHER FINANCING SOURCES AND USES (A5 - B9)			1,929,262.00	(958,653.00)	-149.7%
D. OTHER FINANCING SOURCES/USES					
1) Interfund Transfers					
a) Transfers In		8900-8929	0.00	0.00	0.0%
b) Transfers Out		7600-7629	0.00	0.00	0.0%
2) Other Sources/Uses					
a) Sources		8930-8979	0.00	0.00	0.0%
b) Uses		7630-7699	0.00	0.00	0.0%
3) Contributions		8980-8999	0.00	0.00	0.0%
4) TOTAL, OTHER FINANCING SOURCES/USES			0.00	0.00	0.0%
E. NET INCREASE (DECREASE) IN FUND BALANCE (C + D4)			1,929,262.00	(958,653.00)	-149.7%
F. FUND BALANCE, RESERVES					
1) Beginning Fund Balance					
a) As of July 1 - Unaudited		9791	91,180.38	2,020,442.38	2,115.9%
b) Audit Adjustments		9793	0.00	0.00	0.0%
c) As of July 1 - Audited (F1a + F1b)			91,180.38	2,020,442.38	2,115.9%
d) Other Restatements		9795	0.00	0.00	0.0%
e) Adjusted Beginning Balance (F1c + F1d)			91,180.38	2,020,442.38	2,115.9%
2) Ending Balance, June 30 (E + F1e)			2,020,442.38	1,061,789.38	-47.4%
Components of Ending Fund Balance					
a) Nonspendable					
Revolving Cash		9711	0.00	0.00	0.0%
Stores		9712	0.00	0.00	0.0%
Prepaid Items		9713	0.00	0.00	0.0%
All Others		9719	0.00	0.00	0.0%
b) Restricted		9740	0.00	0.00	0.0%
c) Committed					
Stabilization Arrangements		9750	0.00	0.00	0.0%
Other Commitments		9760	0.00	0.00	0.0%
d) Assigned					
Other Assignments		9780	2,020,442.38	1,061,789.38	-47.4%
e) Unassigned/Unappropriated Reserve for Economic Uncertainties		9789	0.00	0.00	0.0%
Unassigned/Unappropriated Amount		9790	0.00	0.00	0.0%
G. ASSETS					
1) Cash					
a) in County Treasury		9110	0.00		
1) Fair Value Adjustment to Cash in County Treasury		9111	0.00		
b) in Banks		9120	0.00		
c) in Revolving Cash Account		9130	0.00		
d) with Fiscal Agent/Trustee		9135	0.00		

Description	Resource Codes	Object Codes	2025-26 Estimated Actuals	2026-27 Budget	Percent Difference
e) Collections Awaiting Deposit		9140	0.00		
2) Investments		9150	0.00		
3) Accounts Receivable		9200	0.00		
4) Due from Grantor Government		9290	0.00		
5) Due from Other Funds		9310	0.00		
6) Stores		9320	0.00		
7) Prepaid Expenditures		9330	0.00		
8) Other Current Assets		9340	0.00		
9) Lease Receivable		9380	0.00		
10) TOTAL, ASSETS			0.00		
H. DEFERRED OUTFLOWS OF RESOURCES					
1) Deferred Outflows of Resources		9490	0.00		
2) TOTAL, DEFERRED OUTFLOWS			0.00		
I. LIABILITIES					
1) Accounts Payable		9500	0.00		
2) Due to Grantor Governments		9590	0.00		
3) Due to Other Funds		9610	0.00		
4) Current Loans		9640			
5) Unearned Revenue		9650	0.00		
6) TOTAL, LIABILITIES			0.00		
J. DEFERRED INFLOWS OF RESOURCES					
1) Deferred Inflows of Resources		9690	0.00		
2) TOTAL, DEFERRED INFLOWS			0.00		
K. FUND EQUITY					
(G10 + H2) - (I6 + J2)			0.00		
LCFF SOURCES					
LCFF Transfers					
LCFF Transfers - Current Year		8091	0.00	0.00	0.0%
LCFF Transfers - Prior Years		8099	0.00	0.00	0.0%
TOTAL, LCFF SOURCES			0.00	0.00	0.0%
OTHER STATE REVENUE					
All Other State Revenue		8590	0.00	0.00	0.0%
TOTAL, OTHER STATE REVENUE			0.00	0.00	0.0%
OTHER LOCAL REVENUE					
Other Local Revenue					
Community Redevelopment Funds Not Subject to LCFF Deduction		8625	0.00	0.00	0.0%
Sales					
Sale of Equipment/Supplies		8631	0.00	0.00	0.0%
Interest		8660	1,347.00	1,347.00	0.0%
Net Increase (Decrease) in the Fair Value of Investments		8662	0.00	0.00	0.0%
Other Local Revenue					
All Other Local Revenue		8699	1,996,099.00	0.00	-100.0%
All Other Transfers In from All Others		8799	0.00	0.00	0.0%
TOTAL, OTHER LOCAL REVENUE			1,997,446.00	1,347.00	-99.9%
TOTAL, REVENUES			1,997,446.00	1,347.00	-99.9%
CLASSIFIED SALARIES					
Classified Support Salaries		2200	0.00	0.00	0.0%
Other Classified Salaries		2900	0.00	0.00	0.0%
TOTAL, CLASSIFIED SALARIES			0.00	0.00	0.0%
EMPLOYEE BENEFITS					
STRS		3101-3102	0.00	0.00	0.0%
PERS		3201-3202	0.00	0.00	0.0%
OASDI/Medicare/Alternative		3301-3302	0.00	0.00	0.0%
Health and Welfare Benefits		3401-3402	0.00	0.00	0.0%
Unemployment Insurance		3501-3502	0.00	0.00	0.0%
Workers' Compensation		3601-3602	0.00	0.00	0.0%
OPEB, Allocated		3701-3702	0.00	0.00	0.0%

Description	Resource Codes	Object Codes	2025-26 Estimated Actuals	2026-27 Budget	Percent Difference
OPEB, Active Employees		3751-3752	0.00	0.00	0.0%
Other Employee Benefits		3901-3902	0.00	0.00	0.0%
TOTAL, EMPLOYEE BENEFITS			0.00	0.00	0.0%
BOOKS AND SUPPLIES					
Books and Other Reference Materials		4200	0.00	0.00	0.0%
Materials and Supplies		4300	0.00	0.00	0.0%
Noncapitalized Equipment		4400	0.00	0.00	0.0%
TOTAL, BOOKS AND SUPPLIES			0.00	0.00	0.0%
SERVICES AND OTHER OPERATING EXPENDITURES					
Subagreements for Services		5100	0.00	0.00	0.0%
Travel and Conferences		5200	0.00	0.00	0.0%
Rentals, Leases, Repairs, and Noncapitalized Improvements		5600	68,184.00	0.00	-100.0%
Transfers of Direct Costs		5710	0.00	0.00	0.0%
Transfers of Direct Costs - Interfund		5750	0.00	0.00	0.0%
Professional/Consulting Services and Operating Expenditures		5800	0.00	0.00	0.0%
TOTAL, SERVICES AND OTHER OPERATING EXPENDITURES			68,184.00	0.00	-100.0%
CAPITAL OUTLAY					
Land Improvements		6170	0.00	0.00	0.0%
Buildings and Improvements of Buildings		6200	0.00	500,000.00	New
Equipment		6400	0.00	210,000.00	New
Equipment Replacement		6500	0.00	250,000.00	New
Lease Assets		6600	0.00	0.00	0.0%
Subscription Assets		6700	0.00	0.00	0.0%
TOTAL, CAPITAL OUTLAY			0.00	960,000.00	New
OTHER OUTGO (excluding Transfers of Indirect Costs)					
Debt Service					
Debt Service - Interest		7438	0.00	0.00	0.0%
Other Debt Service - Principal		7439	0.00	0.00	0.0%
TOTAL, OTHER OUTGO (excluding Transfers of Indirect Costs)			0.00	0.00	0.0%
TOTAL, EXPENDITURES			68,184.00	960,000.00	1,308.0%
INTERFUND TRANSFERS					
INTERFUND TRANSFERS IN					
Other Authorized Interfund Transfers In		8919	0.00	0.00	0.0%
(a) TOTAL, INTERFUND TRANSFERS IN			0.00	0.00	0.0%
INTERFUND TRANSFERS OUT					
Other Authorized Interfund Transfers Out		7619	0.00	0.00	0.0%
(b) TOTAL, INTERFUND TRANSFERS OUT			0.00	0.00	0.0%
OTHER SOURCES/USES					
SOURCES					
Other Sources					
Transfers from Funds of Lapsed/Reorganized LEAs		8965	0.00	0.00	0.0%
Long-Term Debt Proceeds					
Proceeds from Leases		8972	0.00	0.00	0.0%
Proceeds from SBITAs		8974	0.00	0.00	0.0%
All Other Financing Sources		8979	0.00	0.00	0.0%
(c) TOTAL, SOURCES			0.00	0.00	0.0%
USES					
Transfers of Funds from Lapsed/Reorganized LEAs		7651	0.00	0.00	0.0%
All Other Financing Uses		7699	0.00	0.00	0.0%
(d) TOTAL, USES			0.00	0.00	0.0%
CONTRIBUTIONS					
Contributions from Unrestricted Revenues		8980	0.00	0.00	0.0%
Contributions from Restricted Revenues		8990	0.00	0.00	0.0%
(e) TOTAL, CONTRIBUTIONS			0.00	0.00	0.0%
TOTAL, OTHER FINANCING SOURCES/USES (a - b + c - d + e)			0.00	0.00	0.0%

Description	Function Codes	Object Codes	2025-26 Estimated Actuals	2026-27 Budget	Percent Difference
A. REVENUES					
1) LCFF Sources		8010-8099	0.00	0.00	0.0%
2) Federal Revenue		8100-8299	0.00	0.00	0.0%
3) Other State Revenue		8300-8599	0.00	0.00	0.0%
4) Other Local Revenue		8600-8799	1,997,446.00	1,347.00	-99.9%
5) TOTAL, REVENUES			1,997,446.00	1,347.00	-99.9%
B. EXPENDITURES (Objects 1000-7999)					
1) Instruction	1000-1999		0.00	0.00	0.0%
2) Instruction - Related Services	2000-2999		0.00	0.00	0.0%
3) Pupil Services	3000-3999		0.00	0.00	0.0%
4) Ancillary Services	4000-4999		0.00	0.00	0.0%
5) Community Services	5000-5999		0.00	0.00	0.0%
6) Enterprise	6000-6999		0.00	0.00	0.0%
7) General Administration	7000-7999		0.00	0.00	0.0%
8) Plant Services	8000-8999		68,184.00	960,000.00	1,308.0%
9) Other Outgo	9000-9999	Except 7600-7699	0.00	0.00	0.0%
10) TOTAL, EXPENDITURES			68,184.00	960,000.00	1,308.0%
C. EXCESS (DEFICIENCY) OF REVENUES OVER EXPENDITURES BEFORE OTHER FINANCING SOURCES AND USES (A5 - B10)			1,929,262.00	(958,653.00)	-149.7%
D. OTHER FINANCING SOURCES/USES					
1) Interfund Transfers					
a) Transfers In		8900-8929	0.00	0.00	0.0%
b) Transfers Out		7600-7629	0.00	0.00	0.0%
2) Other Sources/Uses					
a) Sources		8930-8979	0.00	0.00	0.0%
b) Uses		7630-7699	0.00	0.00	0.0%
3) Contributions		8980-8999	0.00	0.00	0.0%
4) TOTAL, OTHER FINANCING SOURCES/USES			0.00	0.00	0.0%
E. NET INCREASE (DECREASE) IN FUND BALANCE (C + D4)			1,929,262.00	(958,653.00)	-149.7%
F. FUND BALANCE, RESERVES					
1) Beginning Fund Balance					
a) As of July 1 - Unaudited		9791	91,180.38	2,020,442.38	2,115.9%
b) Audit Adjustments		9793	0.00	0.00	0.0%
c) As of July 1 - Audited (F1a + F1b)			91,180.38	2,020,442.38	2,115.9%
d) Other Restatements		9795	0.00	0.00	0.0%
e) Adjusted Beginning Balance (F1c + F1d)			91,180.38	2,020,442.38	2,115.9%
2) Ending Balance, June 30 (E + F1e)			2,020,442.38	1,061,789.38	-47.4%
Components of Ending Fund Balance					
a) Nonspendable					
Revolving Cash		9711	0.00	0.00	0.0%
Stores		9712	0.00	0.00	0.0%
Prepaid Items		9713	0.00	0.00	0.0%
All Others		9719	0.00	0.00	0.0%
b) Restricted		9740	0.00	0.00	0.0%
c) Committed					
Stabilization Arrangements		9750	0.00	0.00	0.0%
Other Commitments (by Resource/Object)		9760	0.00	0.00	0.0%
d) Assigned					
Other Assignments (by Resource/Object)		9780	2,020,442.38	1,061,789.38	-47.4%
e) Unassigned/Unappropriated					
Reserve for Economic Uncertainties		9789	0.00	0.00	0.0%
Unassigned/Unappropriated Amount		9790	0.00	0.00	0.0%

Resource	Description	2025-26 Estimated Actuals	2026-27 Budget
Total, Restricted Balance		0.00	0.00

Description	Resource Codes	Object Codes	2025-26 Estimated Actuals	2026-27 Budget	Percent Difference
A. REVENUES					
1) LCFF Sources		8010-8099	0.00	0.00	0.0%
2) Federal Revenue		8100-8299	0.00	0.00	0.0%
3) Other State Revenue		8300-8599	0.00	0.00	0.0%
4) Other Local Revenue		8600-8799	1,699,408.00	1,699,408.00	0.0%
5) TOTAL, REVENUES			1,699,408.00	1,699,408.00	0.0%
B. EXPENDITURES					
1) Certificated Salaries		1000-1999	0.00	0.00	0.0%
2) Classified Salaries		2000-2999	387,897.00	360,394.02	-7.1%
3) Employee Benefits		3000-3999	155,433.00	181,499.79	16.8%
4) Books and Supplies		4000-4999	6,293,413.00	4,154,493.00	-34.0%
5) Services and Other Operating Expenditures		5000-5999	371,203.00	380,501.00	2.5%
6) Capital Outlay		6000-6999	22,490,075.00	22,489,352.00	0.0%
7) Other Outgo (excluding Transfers of Indirect Costs)		7100-7299, 7400-7499	0.00	0.00	0.0%
8) Other Outgo - Transfers of Indirect Costs		7300-7399	0.00	0.00	0.0%
9) TOTAL, EXPENDITURES			29,698,021.00	27,566,239.81	-7.2%
C. EXCESS (DEFICIENCY) OF REVENUES OVER EXPENDITURES BEFORE OTHER FINANCING SOURCES AND USES (A5 - B9)			(27,998,613.00)	(25,866,831.81)	-7.6%
D. OTHER FINANCING SOURCES/USES					
1) Interfund Transfers					
a) Transfers In		8900-8929	0.00	0.00	0.0%
b) Transfers Out		7600-7629	0.00	0.00	0.0%
2) Other Sources/Uses					
a) Sources		8930-8979	0.00	0.00	0.0%
b) Uses		7630-7699	0.00	0.00	0.0%
3) Contributions		8980-8999	0.00	0.00	0.0%
4) TOTAL, OTHER FINANCING SOURCES/USES			0.00	0.00	0.0%
E. NET INCREASE (DECREASE) IN FUND BALANCE (C + D4)			(27,998,613.00)	(25,866,831.81)	-7.6%
F. FUND BALANCE, RESERVES					
1) Beginning Fund Balance					
a) As of July 1 - Unaudited		9791	55,079,046.53	27,080,433.53	-50.8%
b) Audit Adjustments		9793	0.00	0.00	0.0%
c) As of July 1 - Audited (F1a + F1b)			55,079,046.53	27,080,433.53	-50.8%
d) Other Restatements		9795	0.00	0.00	0.0%
e) Adjusted Beginning Balance (F1c + F1d)			55,079,046.53	27,080,433.53	-50.8%
2) Ending Balance, June 30 (E + F1e)			27,080,433.53	1,213,601.72	-95.5%
Components of Ending Fund Balance					
a) Nonspendable					
Revolving Cash		9711	0.00	0.00	0.0%
Stores		9712	0.00	0.00	0.0%
Prepaid Items		9713	0.00	0.00	0.0%
All Others		9719	0.00	0.00	0.0%
b) Restricted		9740	0.00	0.00	0.0%
c) Committed					
Stabilization Arrangements		9750	0.00	0.00	0.0%
Other Commitments		9760	0.00	0.00	0.0%
d) Assigned					
Other Assignments		9780	27,080,433.53	1,213,601.72	-95.5%
e) Unassigned/Unappropriated					
Reserve for Economic Uncertainties		9789	0.00	0.00	0.0%
Unassigned/Unappropriated Amount		9790	0.00	0.00	0.0%
G. ASSETS					
1) Cash					
a) in County Treasury		9110	0.00		
1) Fair Value Adjustment to Cash in County Treasury		9111	0.00		
b) in Banks		9120	0.00		
c) in Revolving Cash Account		9130	0.00		
d) with Fiscal Agent/Trustee		9135	0.00		
e) Collections Awaiting Deposit		9140	0.00		

Description	Resource Codes	Object Codes	2025-26 Estimated Actuals	2026-27 Budget	Percent Difference
2) Investments		9150	0.00		
3) Accounts Receivable		9200	0.00		
4) Due from Grantor Government		9290	0.00		
5) Due from Other Funds		9310	0.00		
6) Stores		9320	0.00		
7) Prepaid Expenditures		9330	0.00		
8) Other Current Assets		9340	0.00		
9) Lease Receivable		9380	0.00		
10) TOTAL, ASSETS			0.00		
H. DEFERRED OUTFLOWS OF RESOURCES					
1) Deferred Outflows of Resources		9490	0.00		
2) TOTAL, DEFERRED OUTFLOWS			0.00		
I. LIABILITIES					
1) Accounts Payable		9500	0.00		
2) Due to Grantor Governments		9590	0.00		
3) Due to Other Funds		9610	0.00		
4) Current Loans		9640	0.00		
5) Unearned Revenue		9650	0.00		
6) TOTAL, LIABILITIES			0.00		
J. DEFERRED INFLOWS OF RESOURCES					
1) Deferred Inflows of Resources		9690	0.00		
2) TOTAL, DEFERRED INFLOWS			0.00		
K. FUND EQUITY					
Ending Fund Balance, June 30 (G10 + H2) - (I6 + J2)			0.00		
FEDERAL REVENUE					
FEMA		8281	0.00	0.00	0.0%
All Other Federal Revenue		8290	0.00	0.00	0.0%
TOTAL, FEDERAL REVENUE			0.00	0.00	0.0%
OTHER STATE REVENUE					
Tax Relief Subventions					
Restricted Levies - Other					
Homeowners' Exemptions		8575	0.00	0.00	0.0%
Other Subventions/In-Lieu Taxes		8576	0.00	0.00	0.0%
All Other State Revenue		8590	0.00	0.00	0.0%
TOTAL, OTHER STATE REVENUE			0.00	0.00	0.0%
OTHER LOCAL REVENUE					
Other Local Revenue					
County and District Taxes					
Other Restricted Levies					
Secured Roll		8615	0.00	0.00	0.0%
Unsecured Roll		8616	0.00	0.00	0.0%
Prior Years' Taxes		8617	0.00	0.00	0.0%
Supplemental Taxes		8618	0.00	0.00	0.0%
Non-Ad Valorem Taxes					
Parcel Taxes		8621	0.00	0.00	0.0%
Other		8622	0.00	0.00	0.0%
Community Redevelopment Funds Not Subject to LCFF Deduction		8625	0.00	0.00	0.0%
Penalties and Interest from Delinquent Non-LCFF Taxes		8629	0.00	0.00	0.0%
Sales					
Sale of Equipment/Supplies		8631	0.00	0.00	0.0%
Leases and Rentals		8650	0.00	0.00	0.0%
Interest		8660	1,696,629.00	1,696,629.00	0.0%
Net Increase (Decrease) in the Fair Value of Investments		8662	0.00	0.00	0.0%
Other Local Revenue					
All Other Local Revenue		8699	2,779.00	2,779.00	0.0%
All Other Transfers In from All Others		8799	0.00	0.00	0.0%
TOTAL, OTHER LOCAL REVENUE			1,699,408.00	1,699,408.00	0.0%
TOTAL, REVENUES			1,699,408.00	1,699,408.00	0.0%
CLASSIFIED SALARIES					

Description	Resource Codes	Object Codes	2025-26 Estimated Actuals	2026-27 Budget	Percent Difference
Classified Support Salaries		2200	0.00	0.00	0.0%
Classified Supervisors' and Administrators' Salaries		2300	364,476.00	360,394.02	-1.1%
Clerical, Technical and Office Salaries		2400	23,421.00	0.00	-100.0%
Other Classified Salaries		2900	0.00	0.00	0.0%
TOTAL, CLASSIFIED SALARIES			387,897.00	360,394.02	-7.1%
EMPLOYEE BENEFITS					
STRS		3101-3102	0.00	0.00	0.0%
PERS		3201-3202	86,067.00	95,445.34	10.9%
OASDI/Medicare/Alternative		3301-3302	24,737.00	27,570.03	11.5%
Health and Welfare Benefits		3401-3402	34,763.00	42,741.50	23.0%
Unemployment Insurance		3501-3502	162.00	510.91	215.4%
Workers' Compensation		3601-3602	8,636.00	9,237.62	7.0%
OPEB, Allocated		3701-3702	1,068.00	5,994.39	461.3%
OPEB, Active Employees		3751-3752	0.00	0.00	0.0%
Other Employee Benefits		3901-3902	0.00	0.00	0.0%
TOTAL, EMPLOYEE BENEFITS			155,433.00	181,499.79	16.8%
BOOKS AND SUPPLIES					
Books and Other Reference Materials		4200	0.00	0.00	0.0%
Materials and Supplies		4300	6,293,413.00	4,154,493.00	-34.0%
Noncapitalized Equipment		4400	0.00	0.00	0.0%
TOTAL, BOOKS AND SUPPLIES			6,293,413.00	4,154,493.00	-34.0%
SERVICES AND OTHER OPERATING EXPENDITURES					
Subagreements for Services		5100	0.00	0.00	0.0%
Travel and Conferences		5200	778.00	778.00	0.0%
Insurance		5400-5450	0.00	0.00	0.0%
Operations and Housekeeping Services		5500	0.00	0.00	0.0%
Rentals, Leases, Repairs, and Noncapitalized Improvements		5600	332,000.00	342,226.00	3.1%
Transfers of Direct Costs		5710	0.00	0.00	0.0%
Transfers of Direct Costs - Interfund		5750	0.00	0.00	0.0%
Professional/Consulting Services and Operating Expenditures		5800	37,099.00	36,130.00	-2.6%
Communications		5900	1,326.00	1,367.00	3.1%
TOTAL, SERVICES AND OTHER OPERATING EXPENDITURES			371,203.00	380,501.00	2.5%
CAPITAL OUTLAY					
Land		6100	0.00	0.00	0.0%
Land Improvements		6170	0.00	0.00	0.0%
Buildings and Improvements of Buildings		6200	22,388,113.00	22,387,390.00	0.0%
Books and Media for New School Libraries or Major Expansion of School Libraries		6300	0.00	0.00	0.0%
Equipment		6400	80,746.00	80,746.00	0.0%
Equipment Replacement		6500	21,216.00	21,216.00	0.0%
Lease Assets		6600	0.00	0.00	0.0%
Subscription Assets		6700	0.00	0.00	0.0%
TOTAL, CAPITAL OUTLAY			22,490,075.00	22,489,352.00	0.0%
OTHER OUTGO (excluding Transfers of Indirect Costs)					
Other Transfers Out					
All Other Transfers Out to All Others		7299	0.00	0.00	0.0%
Debt Service					
Repayment of State School Building Fund Aid - Proceeds from Bonds		7435	0.00	0.00	0.0%
Debt Service - Interest		7438	0.00	0.00	0.0%
Other Debt Service - Principal		7439	0.00	0.00	0.0%
TOTAL, OTHER OUTGO (excluding Transfers of Indirect Costs)			0.00	0.00	0.0%
TOTAL, EXPENDITURES			29,698,021.00	27,566,239.81	-7.2%
INTERFUND TRANSFERS					
INTERFUND TRANSFERS IN					
Other Authorized Interfund Transfers In		8919	0.00	0.00	0.0%
(a) TOTAL, INTERFUND TRANSFERS IN			0.00	0.00	0.0%
INTERFUND TRANSFERS OUT					
To: State School Building Fund/County School Facilities Fund		7613	0.00	0.00	0.0%
Other Authorized Interfund Transfers Out		7619	0.00	0.00	0.0%
(b) TOTAL, INTERFUND TRANSFERS OUT			0.00	0.00	0.0%

Description	Resource Codes	Object Codes	2025-26 Estimated Actuals	2026-27 Budget	Percent Difference
OTHER SOURCES/USES					
SOURCES					
Proceeds					
Proceeds from Sale of Bonds		8951	0.00	0.00	0.0%
Proceeds from Disposal of Capital Assets		8953	0.00	0.00	0.0%
Other Sources					
County School Bldg Aid		8961	0.00	0.00	0.0%
Transfers from Funds of Lapsed/Reorganized LEAs		8965	0.00	0.00	0.0%
Long-Term Debt Proceeds					
Proceeds from Certificates of Participation		8971	0.00	0.00	0.0%
Proceeds from Leases		8972	0.00	0.00	0.0%
Proceeds from Lease Revenue Bonds		8973	0.00	0.00	0.0%
Proceeds from SBITAs		8974	0.00	0.00	0.0%
All Other Financing Sources		8979	0.00	0.00	0.0%
(c) TOTAL, SOURCES			0.00	0.00	0.0%
USES					
Transfers of Funds from Lapsed/Reorganized LEAs		7651	0.00	0.00	0.0%
All Other Financing Uses		7699	0.00	0.00	0.0%
(d) TOTAL, USES			0.00	0.00	0.0%
CONTRIBUTIONS					
Contributions from Unrestricted Revenues		8980	0.00	0.00	0.0%
Contributions from Restricted Revenues		8990	0.00	0.00	0.0%
(e) TOTAL, CONTRIBUTIONS			0.00	0.00	0.0%
TOTAL, OTHER FINANCING SOURCES/USES (a - b + c - d + e)			0.00	0.00	0.0%

Description	Function Codes	Object Codes	2025-26 Estimated Actuals	2026-27 Budget	Percent Difference
A. REVENUES					
1) LCFF Sources		8010-8099	0.00	0.00	0.0%
2) Federal Revenue		8100-8299	0.00	0.00	0.0%
3) Other State Revenue		8300-8599	0.00	0.00	0.0%
4) Other Local Revenue		8600-8799	1,699,408.00	1,699,408.00	0.0%
5) TOTAL, REVENUES			1,699,408.00	1,699,408.00	0.0%
B. EXPENDITURES (Objects 1000-7999)					
1) Instruction	1000-1999		0.00	0.00	0.0%
2) Instruction - Related Services	2000-2999		0.00	0.00	0.0%
3) Pupil Services	3000-3999		0.00	0.00	0.0%
4) Ancillary Services	4000-4999		0.00	0.00	0.0%
5) Community Services	5000-5999		0.00	0.00	0.0%
6) Enterprise	6000-6999		0.00	0.00	0.0%
7) General Administration	7000-7999		0.00	0.00	0.0%
8) Plant Services	8000-8999		29,698,021.00	27,566,239.81	-7.2%
9) Other Outgo	9000-9999	Except 7600-7699	0.00	0.00	0.0%
10) TOTAL, EXPENDITURES			29,698,021.00	27,566,239.81	-7.2%
C. EXCESS (DEFICIENCY) OF REVENUES OVER EXPENDITURES BEFORE OTHER FINANCING SOURCES AND USES (A5 -B10)			(27,998,613.00)	(25,866,831.81)	-7.6%
D. OTHER FINANCING SOURCES/USES					
1) Interfund Transfers					
a) Transfers In		8900-8929	0.00	0.00	0.0%
b) Transfers Out		7600-7629	0.00	0.00	0.0%
2) Other Sources/Uses					
a) Sources		8930-8979	0.00	0.00	0.0%
b) Uses		7630-7699	0.00	0.00	0.0%
3) Contributions		8980-8999	0.00	0.00	0.0%
4) TOTAL, OTHER FINANCING SOURCES/USES			0.00	0.00	0.0%
E. NET INCREASE (DECREASE) IN FUND BALANCE (C + D4)			(27,998,613.00)	(25,866,831.81)	-7.6%
F. FUND BALANCE, RESERVES					
1) Beginning Fund Balance					
a) As of July 1 - Unaudited		9791	55,079,046.53	27,080,433.53	-50.8%
b) Audit Adjustments		9793	0.00	0.00	0.0%
c) As of July 1 - Audited (F1a + F1b)			55,079,046.53	27,080,433.53	-50.8%
d) Other Restatements		9795	0.00	0.00	0.0%
e) Adjusted Beginning Balance (F1c + F1d)			55,079,046.53	27,080,433.53	-50.8%
2) Ending Balance, June 30 (E + F1e)			27,080,433.53	1,213,601.72	-95.5%
Components of Ending Fund Balance					
a) Nonspendable					
Revolving Cash		9711	0.00	0.00	0.0%
Stores		9712	0.00	0.00	0.0%
Prepaid Items		9713	0.00	0.00	0.0%
All Others		9719	0.00	0.00	0.0%
b) Restricted		9740	0.00	0.00	0.0%
c) Committed					
Stabilization Arrangements		9750	0.00	0.00	0.0%
Other Commitments (by Resource/Object)		9760	0.00	0.00	0.0%
d) Assigned					
Other Assignments (by Resource/Object)		9780	27,080,433.53	1,213,601.72	-95.5%
e) Unassigned/Unappropriated					
Reserve for Economic Uncertainties		9789	0.00	0.00	0.0%
Unassigned/Unappropriated Amount		9790	0.00	0.00	0.0%

Resource	Description	2025-26 Estimated Actuals	2026-27 Budget
Total, Restricted Balance		0.00	0.00

Description	Resource Codes	Object Codes	2025-26 Estimated Actuals	2026-27 Budget	Percent Difference
A. REVENUES					
1) LCFF Sources		8010-8099	0.00	0.00	0.0%
2) Federal Revenue		8100-8299	0.00	0.00	0.0%
3) Other State Revenue		8300-8599	0.00	0.00	0.0%
4) Other Local Revenue		8600-8799	1,197,294.00	1,197,294.00	0.0%
5) TOTAL, REVENUES			1,197,294.00	1,197,294.00	0.0%
B. EXPENDITURES					
1) Certificated Salaries		1000-1999	0.00	0.00	0.0%
2) Classified Salaries		2000-2999	0.00	0.00	0.0%
3) Employee Benefits		3000-3999	0.00	0.00	0.0%
4) Books and Supplies		4000-4999	15,134.00	15,134.00	0.0%
5) Services and Other Operating Expenditures		5000-5999	9,840.00	10,143.00	3.1%
6) Capital Outlay		6000-6999	0.00	0.00	0.0%
7) Other Outgo (excluding Transfers of Indirect Costs)		7100-7299, 7400-7499	0.00	0.00	0.0%
8) Other Outgo - Transfers of Indirect Costs		7300-7399	0.00	0.00	0.0%
9) TOTAL, EXPENDITURES			24,974.00	25,277.00	1.2%
C. EXCESS (DEFICIENCY) OF REVENUES OVER EXPENDITURES BEFORE OTHER FINANCING SOURCES AND USES (A5 - B9)			1,172,320.00	1,172,017.00	0.0%
D. OTHER FINANCING SOURCES/USES					
1) Interfund Transfers					
a) Transfers In		8900-8929	0.00	0.00	0.0%
b) Transfers Out		7600-7629	0.00	0.00	0.0%
2) Other Sources/Uses					
a) Sources		8930-8979	0.00	0.00	0.0%
b) Uses		7630-7699	0.00	0.00	0.0%
3) Contributions		8980-8999	0.00	0.00	0.0%
4) TOTAL, OTHER FINANCING SOURCES/USES			0.00	0.00	0.0%
E. NET INCREASE (DECREASE) IN FUND BALANCE (C + D4)			1,172,320.00	1,172,017.00	0.0%
F. FUND BALANCE, RESERVES					
1) Beginning Fund Balance					
a) As of July 1 - Unaudited		9791	11,329,931.08	12,502,251.08	10.3%
b) Audit Adjustments		9793	0.00	0.00	0.0%
c) As of July 1 - Audited (F1a + F1b)			11,329,931.08	12,502,251.08	10.3%
d) Other Restatements		9795	0.00	0.00	0.0%
e) Adjusted Beginning Balance (F1c + F1d)			11,329,931.08	12,502,251.08	10.3%
2) Ending Balance, June 30 (E + F1e)			12,502,251.08	13,674,268.08	9.4%
Components of Ending Fund Balance					
a) Nonspendable					
Revolving Cash		9711	0.00	0.00	0.0%
Stores		9712	0.00	0.00	0.0%
Prepaid Items		9713	0.00	0.00	0.0%
All Others		9719	0.00	0.00	0.0%
b) Restricted		9740	12,374,598.73	13,571,892.73	9.7%
c) Committed					
Stabilization Arrangements		9750	0.00	0.00	0.0%
Other Commitments		9760	0.00	0.00	0.0%
d) Assigned					
Other Assignments		9780	127,652.35	102,375.35	-19.8%
e) Unassigned/Unappropriated					
Reserve for Economic Uncertainties		9789	0.00	0.00	0.0%
Unassigned/Unappropriated Amount		9790	0.00	0.00	0.0%
G. ASSETS					
1) Cash					
a) in County Treasury		9110	0.00		
1) Fair Value Adjustment to Cash in County Treasury		9111	0.00		
b) in Banks		9120	0.00		
c) in Revolving Cash Account		9130	0.00		
d) with Fiscal Agent/Trustee		9135	0.00		
e) Collections Awaiting Deposit		9140	0.00		

Description	Resource Codes	Object Codes	2025-26 Estimated Actuals	2026-27 Budget	Percent Difference
2) Investments		9150	0.00		
3) Accounts Receivable		9200	0.00		
4) Due from Grantor Government		9290	0.00		
5) Due from Other Funds		9310	0.00		
6) Stores		9320	0.00		
7) Prepaid Expenditures		9330	0.00		
8) Other Current Assets		9340	0.00		
9) Lease Receivable		9380	0.00		
10) TOTAL, ASSETS			0.00		
H. DEFERRED OUTFLOWS OF RESOURCES					
1) Deferred Outflows of Resources		9490	0.00		
2) TOTAL, DEFERRED OUTFLOWS			0.00		
I. LIABILITIES					
1) Accounts Payable		9500	0.00		
2) Due to Grantor Governments		9590	0.00		
3) Due to Other Funds		9610	0.00		
4) Current Loans		9640	0.00		
5) Unearned Revenue		9650	0.00		
6) TOTAL, LIABILITIES			0.00		
J. DEFERRED INFLOWS OF RESOURCES					
1) Deferred Inflows of Resources		9690	0.00		
2) TOTAL, DEFERRED INFLOWS			0.00		
K. FUND EQUITY					
Ending Fund Balance, June 30 (G10 + H2) - (I6 + J2)			0.00		
OTHER STATE REVENUE					
Tax Relief Subventions					
Restricted Levies - Other					
Homeowners' Exemptions		8575	0.00	0.00	0.0%
Other Subventions/In-Lieu Taxes		8576	0.00	0.00	0.0%
All Other State Revenue		8590	0.00	0.00	0.0%
TOTAL, OTHER STATE REVENUE			0.00	0.00	0.0%
OTHER LOCAL REVENUE					
Other Local Revenue					
County and District Taxes					
Other Restricted Levies					
Secured Roll		8615	0.00	0.00	0.0%
Unsecured Roll		8616	0.00	0.00	0.0%
Prior Years' Taxes		8617	0.00	0.00	0.0%
Supplemental Taxes		8618	0.00	0.00	0.0%
Non-Ad Valorem Taxes					
Parcel Taxes		8621	0.00	0.00	0.0%
Other		8622	0.00	0.00	0.0%
Community Redevelopment Funds Not Subject to LCFF Deduction		8625	0.00	0.00	0.0%
Penalties and Interest from Delinquent Non-LCFF Taxes		8629	0.00	0.00	0.0%
Sales					
Sale of Equipment/Supplies		8631	0.00	0.00	0.0%
Interest		8660	197,294.00	197,294.00	0.0%
Net Increase (Decrease) in the Fair Value of Investments		8662	0.00	0.00	0.0%
Fees and Contracts					
Mitigation/Developer Fees		8681	1,000,000.00	1,000,000.00	0.0%
Other Local Revenue					
All Other Local Revenue		8699	0.00	0.00	0.0%
All Other Transfers In from All Others		8799	0.00	0.00	0.0%
TOTAL, OTHER LOCAL REVENUE			1,197,294.00	1,197,294.00	0.0%
TOTAL, REVENUES			1,197,294.00	1,197,294.00	0.0%
CERTIFICATED SALARIES					
Other Certificated Salaries		1900	0.00	0.00	0.0%
TOTAL, CERTIFICATED SALARIES			0.00	0.00	0.0%
CLASSIFIED SALARIES					

Description	Resource Codes	Object Codes	2025-26 Estimated Actuals	2026-27 Budget	Percent Difference
Classified Support Salaries		2200	0.00	0.00	0.0%
Classified Supervisors' and Administrators' Salaries		2300	0.00	0.00	0.0%
Clerical, Technical and Office Salaries		2400	0.00	0.00	0.0%
Other Classified Salaries		2900	0.00	0.00	0.0%
TOTAL, CLASSIFIED SALARIES			0.00	0.00	0.0%
EMPLOYEE BENEFITS					
STRS		3101-3102	0.00	0.00	0.0%
PERS		3201-3202	0.00	0.00	0.0%
OASDI/Medicare/Alternative		3301-3302	0.00	0.00	0.0%
Health and Welfare Benefits		3401-3402	0.00	0.00	0.0%
Unemployment Insurance		3501-3502	0.00	0.00	0.0%
Workers' Compensation		3601-3602	0.00	0.00	0.0%
OPEB, Allocated		3701-3702	0.00	0.00	0.0%
OPEB, Active Employees		3751-3752	0.00	0.00	0.0%
Other Employee Benefits		3901-3902	0.00	0.00	0.0%
TOTAL, EMPLOYEE BENEFITS			0.00	0.00	0.0%
BOOKS AND SUPPLIES					
Approved Textbooks and Core Curricula Materials		4100	0.00	0.00	0.0%
Books and Other Reference Materials		4200	0.00	0.00	0.0%
Materials and Supplies		4300	14,006.00	14,006.00	0.0%
Noncapitalized Equipment		4400	1,128.00	1,128.00	0.0%
TOTAL, BOOKS AND SUPPLIES			15,134.00	15,134.00	0.0%
SERVICES AND OTHER OPERATING EXPENDITURES					
Subagreements for Services		5100	0.00	0.00	0.0%
Travel and Conferences		5200	0.00	0.00	0.0%
Insurance		5400-5450	0.00	0.00	0.0%
Operations and Housekeeping Services		5500	0.00	0.00	0.0%
Rentals, Leases, Repairs, and Noncapitalized Improvements		5600	0.00	0.00	0.0%
Transfers of Direct Costs		5710	0.00	0.00	0.0%
Transfers of Direct Costs - Interfund		5750	0.00	0.00	0.0%
Professional/Consulting Services and Operating Expenditures		5800	9,840.00	10,143.00	3.1%
Communications		5900	0.00	0.00	0.0%
TOTAL, SERVICES AND OTHER OPERATING EXPENDITURES			9,840.00	10,143.00	3.1%
CAPITAL OUTLAY					
Land		6100	0.00	0.00	0.0%
Land Improvements		6170	0.00	0.00	0.0%
Buildings and Improvements of Buildings		6200	0.00	0.00	0.0%
Books and Media for New School Libraries or Major Expansion of School Libraries		6300	0.00	0.00	0.0%
Equipment		6400	0.00	0.00	0.0%
Equipment Replacement		6500	0.00	0.00	0.0%
Lease Assets		6600	0.00	0.00	0.0%
Subscription Assets		6700	0.00	0.00	0.0%
TOTAL, CAPITAL OUTLAY			0.00	0.00	0.0%
OTHER OUTGO (excluding Transfers of Indirect Costs)					
Other Transfers Out					
All Other Transfers Out to All Others		7299	0.00	0.00	0.0%
Debt Service					
Debt Service - Interest		7438	0.00	0.00	0.0%
Other Debt Service - Principal		7439	0.00	0.00	0.0%
TOTAL, OTHER OUTGO (excluding Transfers of Indirect Costs)			0.00	0.00	0.0%
TOTAL, EXPENDITURES			24,974.00	25,277.00	1.2%
INTERFUND TRANSFERS					
INTERFUND TRANSFERS IN					
Other Authorized Interfund Transfers In		8919	0.00	0.00	0.0%
(a) TOTAL, INTERFUND TRANSFERS IN			0.00	0.00	0.0%
INTERFUND TRANSFERS OUT					
To: State School Building Fund/County School Facilities Fund		7613	0.00	0.00	0.0%
Other Authorized Interfund Transfers Out		7619	0.00	0.00	0.0%
(b) TOTAL, INTERFUND TRANSFERS OUT			0.00	0.00	0.0%

Description	Resource Codes	Object Codes	2025-26 Estimated Actuals	2026-27 Budget	Percent Difference
OTHER SOURCES/USES					
SOURCES					
Proceeds					
Proceeds from Disposal of Capital Assets		8953	0.00	0.00	0.0%
Other Sources					
Transfers from Funds of Lapsed/Reorganized LEAs		8965	0.00	0.00	0.0%
Long-Term Debt Proceeds					
Proceeds from Certificates of Participation		8971	0.00	0.00	0.0%
Proceeds from Leases		8972	0.00	0.00	0.0%
Proceeds from Lease Revenue Bonds		8973	0.00	0.00	0.0%
Proceeds from SBITAs		8974	0.00	0.00	0.0%
All Other Financing Sources		8979	0.00	0.00	0.0%
(c) TOTAL, SOURCES			0.00	0.00	0.0%
USES					
Transfers of Funds from Lapsed/Reorganized LEAs		7651	0.00	0.00	0.0%
All Other Financing Uses		7699	0.00	0.00	0.0%
(d) TOTAL, USES			0.00	0.00	0.0%
CONTRIBUTIONS					
Contributions from Unrestricted Revenues		8980	0.00	0.00	0.0%
Contributions from Restricted Revenues		8990	0.00	0.00	0.0%
(e) TOTAL, CONTRIBUTIONS			0.00	0.00	0.0%
TOTAL, OTHER FINANCING SOURCES/USES (a - b + c - d + e)			0.00	0.00	0.0%

Description	Function Codes	Object Codes	2025-26 Estimated Actuals	2026-27 Budget	Percent Difference
A. REVENUES					
1) LCFF Sources		8010-8099	0.00	0.00	0.0%
2) Federal Revenue		8100-8299	0.00	0.00	0.0%
3) Other State Revenue		8300-8599	0.00	0.00	0.0%
4) Other Local Revenue		8600-8799	1,197,294.00	1,197,294.00	0.0%
5) TOTAL, REVENUES			1,197,294.00	1,197,294.00	0.0%
B. EXPENDITURES (Objects 1000-7999)					
1) Instruction	1000-1999		0.00	0.00	0.0%
2) Instruction - Related Services	2000-2999		0.00	0.00	0.0%
3) Pupil Services	3000-3999		0.00	0.00	0.0%
4) Ancillary Services	4000-4999		0.00	0.00	0.0%
5) Community Services	5000-5999		0.00	0.00	0.0%
6) Enterprise	6000-6999		0.00	0.00	0.0%
7) General Administration	7000-7999		0.00	0.00	0.0%
8) Plant Services	8000-8999		24,974.00	25,277.00	1.2%
9) Other Outgo	9000-9999	Except 7600-7699	0.00	0.00	0.0%
10) TOTAL, EXPENDITURES			24,974.00	25,277.00	1.2%
C. EXCESS (DEFICIENCY) OF REVENUES OVER EXPENDITURES BEFORE OTHER FINANCING SOURCES AND USES (A5 -B10)			1,172,320.00	1,172,017.00	0.0%
D. OTHER FINANCING SOURCES/USES					
1) Interfund Transfers					
a) Transfers In		8900-8929	0.00	0.00	0.0%
b) Transfers Out		7600-7629	0.00	0.00	0.0%
2) Other Sources/Uses					
a) Sources		8930-8979	0.00	0.00	0.0%
b) Uses		7630-7699	0.00	0.00	0.0%
3) Contributions		8980-8999	0.00	0.00	0.0%
4) TOTAL, OTHER FINANCING SOURCES/USES			0.00	0.00	0.0%
E. NET INCREASE (DECREASE) IN FUND BALANCE (C + D4)			1,172,320.00	1,172,017.00	0.0%
F. FUND BALANCE, RESERVES					
1) Beginning Fund Balance					
a) As of July 1 - Unaudited		9791	11,329,931.08	12,502,251.08	10.3%
b) Audit Adjustments		9793	0.00	0.00	0.0%
c) As of July 1 - Audited (F1a + F1b)			11,329,931.08	12,502,251.08	10.3%
d) Other Restatements		9795	0.00	0.00	0.0%
e) Adjusted Beginning Balance (F1c + F1d)			11,329,931.08	12,502,251.08	10.3%
2) Ending Balance, June 30 (E + F1e)			12,502,251.08	13,674,268.08	9.4%
Components of Ending Fund Balance					
a) Nonspendable					
Revolving Cash		9711	0.00	0.00	0.0%
Stores		9712	0.00	0.00	0.0%
Prepaid Items		9713	0.00	0.00	0.0%
All Others		9719	0.00	0.00	0.0%
b) Restricted		9740	12,374,598.73	13,571,892.73	9.7%
c) Committed					
Stabilization Arrangements		9750	0.00	0.00	0.0%
Other Commitments (by Resource/Object)		9760	0.00	0.00	0.0%
d) Assigned					
Other Assignments (by Resource/Object)		9780	127,652.35	102,375.35	-19.8%
e) Unassigned/Unappropriated					
Reserve for Economic Uncertainties		9789	0.00	0.00	0.0%
Unassigned/Unappropriated Amount		9790	0.00	0.00	0.0%

Resource	Description	2025-26 Estimated Actuals	2026-27 Budget
9010	Other Restricted Local	12,374,598.73	13,571,892.73
Total, Restricted Balance		12,374,598.73	13,571,892.73

Description	Resource Codes	Object Codes	2025-26 Estimated Actuals	2026-27 Budget	Percent Difference
A. REVENUES					
1) LCFF Sources		8010-8099	0.00	0.00	0.0%
2) Federal Revenue		8100-8299	0.00	0.00	0.0%
3) Other State Revenue		8300-8599	0.00	0.00	0.0%
4) Other Local Revenue		8600-8799	3.00	3.00	0.0%
5) TOTAL, REVENUES			3.00	3.00	0.0%
B. EXPENDITURES					
1) Certificated Salaries		1000-1999	0.00	0.00	0.0%
2) Classified Salaries		2000-2999	0.00	0.00	0.0%
3) Employee Benefits		3000-3999	0.00	0.00	0.0%
4) Books and Supplies		4000-4999	0.00	0.00	0.0%
5) Services and Other Operating Expenditures		5000-5999	0.00	0.00	0.0%
6) Capital Outlay		6000-6999	0.00	0.00	0.0%
7) Other Outgo (excluding Transfers of Indirect Costs)		7100-7299, 7400-7499	0.00	0.00	0.0%
8) Other Outgo - Transfers of Indirect Costs		7300-7399	0.00	0.00	0.0%
9) TOTAL, EXPENDITURES			0.00	0.00	0.0%
C. EXCESS (DEFICIENCY) OF REVENUES OVER EXPENDITURES BEFORE OTHER FINANCING SOURCES AND USES (A5 - B9)			3.00	3.00	0.0%
D. OTHER FINANCING SOURCES/USES					
1) Interfund Transfers					
a) Transfers In		8900-8929	0.00	0.00	0.0%
b) Transfers Out		7600-7629	0.00	0.00	0.0%
2) Other Sources/Uses					
a) Sources		8930-8979	0.00	0.00	0.0%
b) Uses		7630-7699	0.00	0.00	0.0%
3) Contributions		8980-8999	0.00	0.00	0.0%
4) TOTAL, OTHER FINANCING SOURCES/USES			0.00	0.00	0.0%
E. NET INCREASE (DECREASE) IN FUND BALANCE (C + D4)			3.00	3.00	0.0%
F. FUND BALANCE, RESERVES					
1) Beginning Fund Balance					
a) As of July 1 - Unaudited		9791	(2.84)	.16	-105.6%
b) Audit Adjustments		9793	0.00	0.00	0.0%
c) As of July 1 - Audited (F1a + F1b)			(2.84)	.16	-105.6%
d) Other Restatements		9795	0.00	0.00	0.0%
e) Adjusted Beginning Balance (F1c + F1d)			(2.84)	.16	-105.6%
2) Ending Balance, June 30 (E + F1e)			.16	3.16	1,875.0%
Components of Ending Fund Balance					
a) Nonspendable					
Revolving Cash		9711	0.00	0.00	0.0%
Stores		9712	0.00	0.00	0.0%
Prepaid Items		9713	0.00	0.00	0.0%
All Others		9719	0.00	0.00	0.0%
b) Restricted		9740	0.00	0.00	0.0%
c) Committed					
Stabilization Arrangements		9750	0.00	0.00	0.0%
Other Commitments		9760	0.00	0.00	0.0%
d) Assigned					
Other Assignments		9780	.16	3.16	1,875.0%
e) Unassigned/Unappropriated					
Reserve for Economic Uncertainties		9789	0.00	0.00	0.0%
Unassigned/Unappropriated Amount		9790	0.00	0.00	0.0%
G. ASSETS					
1) Cash					
a) in County Treasury		9110	0.00		
1) Fair Value Adjustment to Cash in County Treasury		9111	0.00		
b) in Banks		9120	0.00		
c) in Revolving Cash Account		9130	0.00		
d) with Fiscal Agent/Trustee		9135	0.00		
e) Collections Awaiting Deposit		9140	0.00		

Description	Resource Codes	Object Codes	2025-26 Estimated Actuals	2026-27 Budget	Percent Difference
2) Investments		9150	0.00		
3) Accounts Receivable		9200	0.00		
4) Due from Grantor Government		9290	0.00		
5) Due from Other Funds		9310	0.00		
6) Stores		9320	0.00		
7) Prepaid Expenditures		9330	0.00		
8) Other Current Assets		9340	0.00		
9) Lease Receivable		9380	0.00		
10) TOTAL, ASSETS			0.00		
H. DEFERRED OUTFLOWS OF RESOURCES					
1) Deferred Outflows of Resources		9490	0.00		
2) TOTAL, DEFERRED OUTFLOWS			0.00		
I. LIABILITIES					
1) Accounts Payable		9500	0.00		
2) Due to Grantor Governments		9590	0.00		
3) Due to Other Funds		9610	0.00		
4) Current Loans		9640	0.00		
5) Unearned Revenue		9650	0.00		
6) TOTAL, LIABILITIES			0.00		
J. DEFERRED INFLOWS OF RESOURCES					
1) Deferred Inflows of Resources		9690	0.00		
2) TOTAL, DEFERRED INFLOWS			0.00		
K. FUND EQUITY					
Ending Fund Balance, June 30 (G10 + H2) - (I6 + J2)			0.00		
FEDERAL REVENUE					
All Other Federal Revenue		8290	0.00	0.00	0.0%
TOTAL, FEDERAL REVENUE			0.00	0.00	0.0%
OTHER STATE REVENUE					
School Facilities Apportionments		8545	0.00	0.00	0.0%
Pass-Through Revenues from State Sources		8587	0.00	0.00	0.0%
All Other State Revenue		8590	0.00	0.00	0.0%
TOTAL, OTHER STATE REVENUE			0.00	0.00	0.0%
OTHER LOCAL REVENUE					
Sales					
Sale of Equipment/Supplies		8631	0.00	0.00	0.0%
Leases and Rentals		8650	0.00	0.00	0.0%
Interest		8660	3.00	3.00	0.0%
Net Increase (Decrease) in the Fair Value of Investments		8662	0.00	0.00	0.0%
Other Local Revenue					
All Other Local Revenue		8699	0.00	0.00	0.0%
All Other Transfers In from All Others		8799	0.00	0.00	0.0%
TOTAL, OTHER LOCAL REVENUE			3.00	3.00	0.0%
TOTAL, REVENUES			3.00	3.00	0.0%
CLASSIFIED SALARIES					
Classified Support Salaries		2200	0.00	0.00	0.0%
Classified Supervisors' and Administrators' Salaries		2300	0.00	0.00	0.0%
Clerical, Technical and Office Salaries		2400	0.00	0.00	0.0%
Other Classified Salaries		2900	0.00	0.00	0.0%
TOTAL, CLASSIFIED SALARIES			0.00	0.00	0.0%
EMPLOYEE BENEFITS					
STRS		3101-3102	0.00	0.00	0.0%
PERS		3201-3202	0.00	0.00	0.0%
OASDI/Medicare/Alternative		3301-3302	0.00	0.00	0.0%
Health and Welfare Benefits		3401-3402	0.00	0.00	0.0%
Unemployment Insurance		3501-3502	0.00	0.00	0.0%
Workers' Compensation		3601-3602	0.00	0.00	0.0%
OPEB, Allocated		3701-3702	0.00	0.00	0.0%
OPEB, Active Employees		3751-3752	0.00	0.00	0.0%
Other Employee Benefits		3901-3902	0.00	0.00	0.0%

Description	Resource Codes	Object Codes	2025-26 Estimated Actuals	2026-27 Budget	Percent Difference
TOTAL, EMPLOYEE BENEFITS			0.00	0.00	0.0%
BOOKS AND SUPPLIES					
Books and Other Reference Materials		4200	0.00	0.00	0.0%
Materials and Supplies		4300	0.00	0.00	0.0%
Noncapitalized Equipment		4400	0.00	0.00	0.0%
TOTAL, BOOKS AND SUPPLIES			0.00	0.00	0.0%
SERVICES AND OTHER OPERATING EXPENDITURES					
Subagreements for Services		5100	0.00	0.00	0.0%
Travel and Conferences		5200	0.00	0.00	0.0%
Insurance		5400-5450	0.00	0.00	0.0%
Operations and Housekeeping Services		5500	0.00	0.00	0.0%
Rentals, Leases, Repairs, and Noncapitalized Improvements		5600	0.00	0.00	0.0%
Transfers of Direct Costs		5710	0.00	0.00	0.0%
Transfers of Direct Costs - Interfund		5750	0.00	0.00	0.0%
Professional/Consulting Services and Operating Expenditures		5800	0.00	0.00	0.0%
Communications		5900	0.00	0.00	0.0%
TOTAL, SERVICES AND OTHER OPERATING EXPENDITURES			0.00	0.00	0.0%
CAPITAL OUTLAY					
Land		6100	0.00	0.00	0.0%
Land Improvements		6170	0.00	0.00	0.0%
Buildings and Improvements of Buildings		6200	0.00	0.00	0.0%
Books and Media for New School Libraries or Major Expansion of School Libraries		6300	0.00	0.00	0.0%
Equipment		6400	0.00	0.00	0.0%
Equipment Replacement		6500	0.00	0.00	0.0%
Lease Assets		6600	0.00	0.00	0.0%
Subscription Assets		6700	0.00	0.00	0.0%
TOTAL, CAPITAL OUTLAY			0.00	0.00	0.0%
OTHER OUTGO (excluding Transfers of Indirect Costs)					
Other Transfers Out					
Transfers of Pass-Through Revenues					
To Districts or Charter Schools		7211	0.00	0.00	0.0%
To County Offices		7212	0.00	0.00	0.0%
To JPAs		7213	0.00	0.00	0.0%
All Other Transfers Out to All Others		7299	0.00	0.00	0.0%
Debt Service					
Debt Service - Interest		7438	0.00	0.00	0.0%
Other Debt Service - Principal		7439	0.00	0.00	0.0%
TOTAL, OTHER OUTGO (excluding Transfers of Indirect Costs)			0.00	0.00	0.0%
TOTAL, EXPENDITURES			0.00	0.00	0.0%
INTERFUND TRANSFERS					
INTERFUND TRANSFERS IN					
To: State School Building Fund/County School Facilities Fund From: All Other Funds		8913	0.00	0.00	0.0%
Other Authorized Interfund Transfers In		8919	0.00	0.00	0.0%
(a) TOTAL, INTERFUND TRANSFERS IN			0.00	0.00	0.0%
INTERFUND TRANSFERS OUT					
To: State School Building Fund/County School Facilities Fund		7613	0.00	0.00	0.0%
Other Authorized Interfund Transfers Out		7619	0.00	0.00	0.0%
(b) TOTAL, INTERFUND TRANSFERS OUT			0.00	0.00	0.0%
OTHER SOURCES/USES					
SOURCES					
Proceeds					
Proceeds from Disposal of Capital Assets		8953	0.00	0.00	0.0%
Other Sources					
Transfers from Funds of Lapsed/Reorganized LEAs		8965	0.00	0.00	0.0%
Long-Term Debt Proceeds					
Proceeds from Certificates of Participation		8971	0.00	0.00	0.0%
Proceeds from Leases		8972	0.00	0.00	0.0%
Proceeds from Lease Revenue Bonds		8973	0.00	0.00	0.0%
Proceeds from SBITAs		8974	0.00	0.00	0.0%
All Other Financing Sources		8979	0.00	0.00	0.0%

Description	Resource Codes	Object Codes	2025-26 Estimated Actuals	2026-27 Budget	Percent Difference
(c) TOTAL, SOURCES			0.00	0.00	0.0%
USES					
Transfers of Funds from Lapsed/Reorganized LEAs		7651	0.00	0.00	0.0%
(d) TOTAL, USES			0.00	0.00	0.0%
CONTRIBUTIONS					
Contributions from Unrestricted Revenues		8980	0.00	0.00	0.0%
Contributions from Restricted Revenues		8990	0.00	0.00	0.0%
(e) TOTAL, CONTRIBUTIONS			0.00	0.00	0.0%
TOTAL, OTHER FINANCING SOURCES/USES (a - b + c - d + e)			0.00	0.00	0.0%

Description	Function Codes	Object Codes	2025-26 Estimated Actuals	2026-27 Budget	Percent Difference
A. REVENUES					
1) LCFF Sources		8010-8099	0.00	0.00	0.0%
2) Federal Revenue		8100-8299	0.00	0.00	0.0%
3) Other State Revenue		8300-8599	0.00	0.00	0.0%
4) Other Local Revenue		8600-8799	3.00	3.00	0.0%
5) TOTAL, REVENUES			3.00	3.00	0.0%
B. EXPENDITURES (Objects 1000-7999)					
1) Instruction	1000-1999		0.00	0.00	0.0%
2) Instruction - Related Services	2000-2999		0.00	0.00	0.0%
3) Pupil Services	3000-3999		0.00	0.00	0.0%
4) Ancillary Services	4000-4999		0.00	0.00	0.0%
5) Community Services	5000-5999		0.00	0.00	0.0%
6) Enterprise	6000-6999		0.00	0.00	0.0%
7) General Administration	7000-7999		0.00	0.00	0.0%
8) Plant Services	8000-8999		0.00	0.00	0.0%
9) Other Outgo	9000-9999	Except 7600-7699	0.00	0.00	0.0%
10) TOTAL, EXPENDITURES			0.00	0.00	0.0%
C. EXCESS (DEFICIENCY) OF REVENUES OVER EXPENDITURES BEFORE OTHER FINANCING SOURCES AND USES (A5 -B10)			3.00	3.00	0.0%
D. OTHER FINANCING SOURCES/USES					
1) Interfund Transfers					
a) Transfers In		8900-8929	0.00	0.00	0.0%
b) Transfers Out		7600-7629	0.00	0.00	0.0%
2) Other Sources/Uses					
a) Sources		8930-8979	0.00	0.00	0.0%
b) Uses		7630-7699	0.00	0.00	0.0%
3) Contributions		8980-8999	0.00	0.00	0.0%
4) TOTAL, OTHER FINANCING SOURCES/USES			0.00	0.00	0.0%
E. NET INCREASE (DECREASE) IN FUND BALANCE (C + D4)			3.00	3.00	0.0%
F. FUND BALANCE, RESERVES					
1) Beginning Fund Balance					
a) As of July 1 - Unaudited		9791	(2.84)	.16	-105.6%
b) Audit Adjustments		9793	0.00	0.00	0.0%
c) As of July 1 - Audited (F1a + F1b)			(2.84)	.16	-105.6%
d) Other Restatements		9795	0.00	0.00	0.0%
e) Adjusted Beginning Balance (F1c + F1d)			(2.84)	.16	-105.6%
2) Ending Balance, June 30 (E + F1e)			.16	3.16	1,875.0%
Components of Ending Fund Balance					
a) Nonspendable					
Revolving Cash		9711	0.00	0.00	0.0%
Stores		9712	0.00	0.00	0.0%
Prepaid Items		9713	0.00	0.00	0.0%
All Others		9719	0.00	0.00	0.0%
b) Restricted		9740	0.00	0.00	0.0%
c) Committed					
Stabilization Arrangements		9750	0.00	0.00	0.0%
Other Commitments (by Resource/Object)		9760	0.00	0.00	0.0%
d) Assigned					
Other Assignments (by Resource/Object)		9780	.16	3.16	1,875.0%
e) Unassigned/Unappropriated					
Reserve for Economic Uncertainties		9789	0.00	0.00	0.0%
Unassigned/Unappropriated Amount		9790	0.00	0.00	0.0%

Resource	Description	2025-26 Estimated Actuals	2026-27 Budget
Total, Restricted Balance		0.00	0.00

Description	Resource Codes	Object Codes	2025-26 Estimated Actuals	2026-27 Budget	Percent Difference
A. REVENUES					
1) LCFF Sources		8010-8099	0.00	0.00	0.0%
2) Federal Revenue		8100-8299	0.00	0.00	0.0%
3) Other State Revenue		8300-8599	0.00	0.00	0.0%
4) Other Local Revenue		8600-8799	670,340.00	670,340.00	0.0%
5) TOTAL, REVENUES			670,340.00	670,340.00	0.0%
B. EXPENDITURES					
1) Certificated Salaries		1000-1999	0.00	0.00	0.0%
2) Classified Salaries		2000-2999	0.00	0.00	0.0%
3) Employee Benefits		3000-3999	0.00	0.00	0.0%
4) Books and Supplies		4000-4999	29,709.00	29,709.00	0.0%
5) Services and Other Operating Expenditures		5000-5999	106,009.00	109,273.00	3.1%
6) Capital Outlay		6000-6999	2,752,518.00	688,130.00	-75.0%
7) Other Outgo (excluding Transfers of Indirect Costs)		7100-7299, 7400-7499	0.00	1,372,477.00	New
8) Other Outgo - Transfers of Indirect Costs		7300-7399	0.00	0.00	0.0%
9) TOTAL, EXPENDITURES			2,888,236.00	2,199,589.00	-23.8%
C. EXCESS (DEFICIENCY) OF REVENUES OVER EXPENDITURES BEFORE OTHER FINANCING SOURCES AND USES (A5 - B9)			(2,217,896.00)	(1,529,249.00)	-31.0%
D. OTHER FINANCING SOURCES/USES					
1) Interfund Transfers					
a) Transfers In		8900-8929	0.00	0.00	0.0%
b) Transfers Out		7600-7629	0.00	0.00	0.0%
2) Other Sources/Uses					
a) Sources		8930-8979	0.00	0.00	0.0%
b) Uses		7630-7699	0.00	0.00	0.0%
3) Contributions		8980-8999	0.00	0.00	0.0%
4) TOTAL, OTHER FINANCING SOURCES/USES			0.00	0.00	0.0%
E. NET INCREASE (DECREASE) IN FUND BALANCE (C + D4)			(2,217,896.00)	(1,529,249.00)	-31.0%
F. FUND BALANCE, RESERVES					
1) Beginning Fund Balance					
a) As of July 1 - Unaudited		9791	20,908,969.70	18,691,073.70	-10.6%
b) Audit Adjustments		9793	0.00	0.00	0.0%
c) As of July 1 - Audited (F1a + F1b)			20,908,969.70	18,691,073.70	-10.6%
d) Other Restatements		9795	0.00	0.00	0.0%
e) Adjusted Beginning Balance (F1c + F1d)			20,908,969.70	18,691,073.70	-10.6%
2) Ending Balance, June 30 (E + F1e)			18,691,073.70	17,161,824.70	-8.2%
Components of Ending Fund Balance					
a) Nonspendable					
Revolving Cash		9711	0.00	0.00	0.0%
Stores		9712	0.00	0.00	0.0%
Prepaid Items		9713	0.00	0.00	0.0%
All Others		9719	0.00	0.00	0.0%
b) Restricted		9740	11,508,331.18	10,741,520.18	-6.7%
c) Committed					
Stabilization Arrangements		9750	0.00	0.00	0.0%
Other Commitments		9760	0.00	0.00	0.0%
d) Assigned					
Other Assignments		9780	7,182,742.52	6,420,304.52	-10.6%
e) Unassigned/Unappropriated					
Reserve for Economic Uncertainties		9789	0.00	0.00	0.0%
Unassigned/Unappropriated Amount		9790	0.00	0.00	0.0%
G. ASSETS					
1) Cash					
a) in County Treasury		9110	0.00		
1) Fair Value Adjustment to Cash in County Treasury		9111	0.00		
b) in Banks		9120	0.00		
c) in Revolving Cash Account		9130	0.00		
d) with Fiscal Agent/Trustee		9135	0.00		
e) Collections Awaiting Deposit		9140	0.00		

Description	Resource Codes	Object Codes	2025-26 Estimated Actuals	2026-27 Budget	Percent Difference
2) Investments		9150	0.00		
3) Accounts Receivable		9200	0.00		
4) Due from Grantor Government		9290	0.00		
5) Due from Other Funds		9310	0.00		
6) Stores		9320	0.00		
7) Prepaid Expenditures		9330	0.00		
8) Other Current Assets		9340	0.00		
9) Lease Receivable		9380	0.00		
10) TOTAL, ASSETS			0.00		
H. DEFERRED OUTFLOWS OF RESOURCES					
1) Deferred Outflows of Resources		9490	0.00		
2) TOTAL, DEFERRED OUTFLOWS			0.00		
I. LIABILITIES					
1) Accounts Payable		9500	0.00		
2) Due to Grantor Governments		9590	0.00		
3) Due to Other Funds		9610	0.00		
4) Current Loans		9640	0.00		
5) Unearned Revenue		9650	0.00		
6) TOTAL, LIABILITIES			0.00		
J. DEFERRED INFLOWS OF RESOURCES					
1) Deferred Inflows of Resources		9690	0.00		
2) TOTAL, DEFERRED INFLOWS			0.00		
K. FUND EQUITY					
Ending Fund Balance, June 30 (G10 + H2) - (I6 + J2)			0.00		
FEDERAL REVENUE					
FEMA		8281	0.00	0.00	0.0%
All Other Federal Revenue		8290	0.00	0.00	0.0%
TOTAL, FEDERAL REVENUE			0.00	0.00	0.0%
OTHER STATE REVENUE					
Pass-Through Revenues from State Sources		8587	0.00	0.00	0.0%
California Clean Energy Jobs Act	6230	8590	0.00	0.00	0.0%
All Other State Revenue	All Other	8590	0.00	0.00	0.0%
TOTAL, OTHER STATE REVENUE			0.00	0.00	0.0%
OTHER LOCAL REVENUE					
Other Local Revenue					
Community Redevelopment Funds Not Subject to LCFF Deduction		8625	0.00	0.00	0.0%
Sales					
Sale of Equipment/Supplies		8631	0.00	0.00	0.0%
Leases and Rentals		8650	0.00	0.00	0.0%
Interest		8660	670,340.00	670,340.00	0.0%
Net Increase (Decrease) in the Fair Value of Investments		8662	0.00	0.00	0.0%
Other Local Revenue					
All Other Local Revenue		8699	0.00	0.00	0.0%
All Other Transfers In from All Others		8799	0.00	0.00	0.0%
TOTAL, OTHER LOCAL REVENUE			670,340.00	670,340.00	0.0%
TOTAL, REVENUES			670,340.00	670,340.00	0.0%
CLASSIFIED SALARIES					
Classified Support Salaries		2200	0.00	0.00	0.0%
Classified Supervisors' and Administrators' Salaries		2300	0.00	0.00	0.0%
Clerical, Technical and Office Salaries		2400	0.00	0.00	0.0%
Other Classified Salaries		2900	0.00	0.00	0.0%
TOTAL, CLASSIFIED SALARIES			0.00	0.00	0.0%
EMPLOYEE BENEFITS					
STRS		3101-3102	0.00	0.00	0.0%
PERS		3201-3202	0.00	0.00	0.0%
OASDI/Medicare/Alternative		3301-3302	0.00	0.00	0.0%
Health and Welfare Benefits		3401-3402	0.00	0.00	0.0%
Unemployment Insurance		3501-3502	0.00	0.00	0.0%
Workers' Compensation		3601-3602	0.00	0.00	0.0%

Description	Resource Codes	Object Codes	2025-26 Estimated Actuals	2026-27 Budget	Percent Difference
OPEB, Allocated		3701-3702	0.00	0.00	0.0%
OPEB, Active Employees		3751-3752	0.00	0.00	0.0%
Other Employee Benefits		3901-3902	0.00	0.00	0.0%
TOTAL, EMPLOYEE BENEFITS			0.00	0.00	0.0%
BOOKS AND SUPPLIES					
Books and Other Reference Materials		4200	0.00	0.00	0.0%
Materials and Supplies		4300	5,416.00	5,416.00	0.0%
Noncapitalized Equipment		4400	24,293.00	24,293.00	0.0%
TOTAL, BOOKS AND SUPPLIES			29,709.00	29,709.00	0.0%
SERVICES AND OTHER OPERATING EXPENDITURES					
Subagreements for Services		5100	0.00	0.00	0.0%
Travel and Conferences		5200	0.00	0.00	0.0%
Insurance		5400-5450	0.00	0.00	0.0%
Operations and Housekeeping Services		5500	0.00	0.00	0.0%
Rentals, Leases, Repairs, and Noncapitalized Improvements		5600	0.00	0.00	0.0%
Transfers of Direct Costs		5710	0.00	0.00	0.0%
Transfers of Direct Costs - Interfund		5750	0.00	0.00	0.0%
Professional/Consulting Services and Operating Expenditures		5800	106,009.00	109,273.00	3.1%
Communications		5900	0.00	0.00	0.0%
TOTAL, SERVICES AND OTHER OPERATING EXPENDITURES			106,009.00	109,273.00	3.1%
CAPITAL OUTLAY					
Land		6100	0.00	0.00	0.0%
Land Improvements		6170	0.00	0.00	0.0%
Buildings and Improvements of Buildings		6200	2,704,127.00	676,032.00	-75.0%
Books and Media for New School Libraries or Major Expansion of School Libraries		6300	0.00	0.00	0.0%
Equipment		6400	0.00	0.00	0.0%
Equipment Replacement		6500	48,391.00	12,098.00	-75.0%
Lease Assets		6600	0.00	0.00	0.0%
Subscription Assets		6700	0.00	0.00	0.0%
TOTAL, CAPITAL OUTLAY			2,752,518.00	688,130.00	-75.0%
OTHER OUTGO (excluding Transfers of Indirect Costs)					
Other Transfers Out					
Transfers of Pass-Through Revenues					
To Districts or Charter Schools		7211	0.00	0.00	0.0%
To County Offices		7212	0.00	0.00	0.0%
To JPAs		7213	0.00	0.00	0.0%
All Other Transfers Out to All Others		7299	0.00	0.00	0.0%
Debt Service					
Debt Service - Interest		7438	0.00	486,634.00	New
Other Debt Service - Principal		7439	0.00	885,843.00	New
TOTAL, OTHER OUTGO (excluding Transfers of Indirect Costs)			0.00	1,372,477.00	New
TOTAL, EXPENDITURES			2,888,236.00	2,199,589.00	-23.8%
INTERFUND TRANSFERS					
INTERFUND TRANSFERS IN					
From: General Fund/CSSF		8912	0.00	0.00	0.0%
Other Authorized Interfund Transfers In		8919	0.00	0.00	0.0%
(a) TOTAL, INTERFUND TRANSFERS IN			0.00	0.00	0.0%
INTERFUND TRANSFERS OUT					
To: General Fund/CSSF		7612	0.00	0.00	0.0%
To: State School Building Fund/County School Facilities Fund		7613	0.00	0.00	0.0%
Other Authorized Interfund Transfers Out		7619	0.00	0.00	0.0%
(b) TOTAL, INTERFUND TRANSFERS OUT			0.00	0.00	0.0%
OTHER SOURCES/USES					
SOURCES					
Proceeds					
Proceeds from Disposal of Capital Assets		8953	0.00	0.00	0.0%
Other Sources					
Transfers from Funds of Lapsed/Reorganized LEAs		8965	0.00	0.00	0.0%
Long-Term Debt Proceeds					
Proceeds from Certificates of Participation		8971	0.00	0.00	0.0%

Description	Resource Codes	Object Codes	2025-26 Estimated Actuals	2026-27 Budget	Percent Difference
Proceeds from Leases		8972	0.00	0.00	0.0%
Proceeds from Lease Revenue Bonds		8973	0.00	0.00	0.0%
Proceeds from SBITAs		8974	0.00	0.00	0.0%
All Other Financing Sources		8979	0.00	0.00	0.0%
(c) TOTAL, SOURCES			0.00	0.00	0.0%
USES					
Transfers of Funds from Lapsed/Reorganized LEAs		7651	0.00	0.00	0.0%
All Other Financing Uses		7699	0.00	0.00	0.0%
(d) TOTAL, USES			0.00	0.00	0.0%
CONTRIBUTIONS					
Contributions from Unrestricted Revenues		8980	0.00	0.00	0.0%
Contributions from Restricted Revenues		8990	0.00	0.00	0.0%
(e) TOTAL, CONTRIBUTIONS			0.00	0.00	0.0%
TOTAL, OTHER FINANCING SOURCES/USES (a - b + c - d + e)			0.00	0.00	0.0%

Description	Function Codes	Object Codes	2025-26 Estimated Actuals	2026-27 Budget	Percent Difference
A. REVENUES					
1) LCFF Sources		8010-8099	0.00	0.00	0.0%
2) Federal Revenue		8100-8299	0.00	0.00	0.0%
3) Other State Revenue		8300-8599	0.00	0.00	0.0%
4) Other Local Revenue		8600-8799	670,340.00	670,340.00	0.0%
5) TOTAL, REVENUES			670,340.00	670,340.00	0.0%
B. EXPENDITURES (Objects 1000-7999)					
1) Instruction	1000-1999		0.00	0.00	0.0%
2) Instruction - Related Services	2000-2999		0.00	0.00	0.0%
3) Pupil Services	3000-3999		0.00	0.00	0.0%
4) Ancillary Services	4000-4999		0.00	0.00	0.0%
5) Community Services	5000-5999		0.00	0.00	0.0%
6) Enterprise	6000-6999		0.00	0.00	0.0%
7) General Administration	7000-7999		0.00	0.00	0.0%
8) Plant Services	8000-8999		2,888,236.00	827,112.00	-71.4%
9) Other Outgo	9000-9999	Except 7600-7699	0.00	1,372,477.00	New
10) TOTAL, EXPENDITURES			2,888,236.00	2,199,589.00	-23.8%
C. EXCESS (DEFICIENCY) OF REVENUES OVER EXPENDITURES BEFORE OTHER FINANCING SOURCES AND USES (A5 -B10)			(2,217,896.00)	(1,529,249.00)	-31.0%
D. OTHER FINANCING SOURCES/USES					
1) Interfund Transfers					
a) Transfers In		8900-8929	0.00	0.00	0.0%
b) Transfers Out		7600-7629	0.00	0.00	0.0%
2) Other Sources/Uses					
a) Sources		8930-8979	0.00	0.00	0.0%
b) Uses		7630-7699	0.00	0.00	0.0%
3) Contributions		8980-8999	0.00	0.00	0.0%
4) TOTAL, OTHER FINANCING SOURCES/USES			0.00	0.00	0.0%
E. NET INCREASE (DECREASE) IN FUND BALANCE (C + D4)			(2,217,896.00)	(1,529,249.00)	-31.0%
F. FUND BALANCE, RESERVES					
1) Beginning Fund Balance					
a) As of July 1 - Unaudited		9791	20,908,969.70	18,691,073.70	-10.6%
b) Audit Adjustments		9793	0.00	0.00	0.0%
c) As of July 1 - Audited (F1a + F1b)			20,908,969.70	18,691,073.70	-10.6%
d) Other Restatements		9795	0.00	0.00	0.0%
e) Adjusted Beginning Balance (F1c + F1d)			20,908,969.70	18,691,073.70	-10.6%
2) Ending Balance, June 30 (E + F1e)			18,691,073.70	17,161,824.70	-8.2%
Components of Ending Fund Balance					
a) Nonspendable					
Revolving Cash		9711	0.00	0.00	0.0%
Stores		9712	0.00	0.00	0.0%
Prepaid Items		9713	0.00	0.00	0.0%
All Others		9719	0.00	0.00	0.0%
b) Restricted		9740	11,508,331.18	10,741,520.18	-6.7%
c) Committed					
Stabilization Arrangements		9750	0.00	0.00	0.0%
Other Commitments (by Resource/Object)		9760	0.00	0.00	0.0%
d) Assigned					
Other Assignments (by Resource/Object)		9780	7,182,742.52	6,420,304.52	-10.6%
e) Unassigned/Unappropriated					
Reserve for Economic Uncertainties		9789	0.00	0.00	0.0%
Unassigned/Unappropriated Amount		9790	0.00	0.00	0.0%

Resource	Description	2025-26 Estimated Actuals	2026-27 Budget
6230	California Clean Energy Jobs Act	.42	.42
9010	Other Restricted Local	11,508,330.76	10,741,519.76
Total, Restricted Balance		11,508,331.18	10,741,520.18

Description	Resource Codes	Object Codes	2025-26 Estimated Actuals	2026-27 Budget	Percent Difference
A. REVENUES					
1) LCFF Sources		8010-8099	0.00	0.00	0.0%
2) Federal Revenue		8100-8299	0.00	0.00	0.0%
3) Other State Revenue		8300-8599	0.00	0.00	0.0%
4) Other Local Revenue		8600-8799	17,272,486.00	17,272,486.00	0.0%
5) TOTAL, REVENUES			17,272,486.00	17,272,486.00	0.0%
B. EXPENDITURES					
1) Certificated Salaries		1000-1999	0.00	0.00	0.0%
2) Classified Salaries		2000-2999	0.00	0.00	0.0%
3) Employee Benefits		3000-3999	0.00	0.00	0.0%
4) Books and Supplies		4000-4999	0.00	0.00	0.0%
5) Services and Other Operating Expenditures		5000-5999	0.00	0.00	0.0%
6) Capital Outlay		6000-6999	0.00	0.00	0.0%
7) Other Outgo (excluding Transfers of Indirect Costs)		7100-7299, 7400-7499	18,601,972.00	18,601,972.00	0.0%
8) Other Outgo - Transfers of Indirect Costs		7300-7399	0.00	0.00	0.0%
9) TOTAL, EXPENDITURES			18,601,972.00	18,601,972.00	0.0%
C. EXCESS (DEFICIENCY) OF REVENUES OVER EXPENDITURES BEFORE OTHER FINANCING SOURCES AND USES (A5 - B9)			(1,329,486.00)	(1,329,486.00)	0.0%
D. OTHER FINANCING SOURCES/USES					
1) Interfund Transfers					
a) Transfers In		8900-8929	0.00	0.00	0.0%
b) Transfers Out		7600-7629	0.00	0.00	0.0%
2) Other Sources/Uses					
a) Sources		8930-8979	0.00	0.00	0.0%
b) Uses		7630-7699	0.00	0.00	0.0%
3) Contributions		8980-8999	0.00	0.00	0.0%
4) TOTAL, OTHER FINANCING SOURCES/USES			0.00	0.00	0.0%
E. NET INCREASE (DECREASE) IN FUND BALANCE (C + D4)			(1,329,486.00)	(1,329,486.00)	0.0%
F. FUND BALANCE, RESERVES					
1) Beginning Fund Balance					
a) As of July 1 - Unaudited		9791	18,160,092.00	16,830,606.00	-7.3%
b) Audit Adjustments		9793	0.00	0.00	0.0%
c) As of July 1 - Audited (F1a + F1b)			18,160,092.00	16,830,606.00	-7.3%
d) Other Restatements		9795	0.00	0.00	0.0%
e) Adjusted Beginning Balance (F1c + F1d)			18,160,092.00	16,830,606.00	-7.3%
2) Ending Balance, June 30 (E + F1e)			16,830,606.00	15,501,120.00	-7.9%
Components of Ending Fund Balance					
a) Nonspendable					
Revolving Cash		9711	0.00	0.00	0.0%
Stores		9712	0.00	0.00	0.0%
Prepaid Items		9713	0.00	0.00	0.0%
All Others		9719	0.00	0.00	0.0%
b) Restricted		9740	0.00	0.00	0.0%
c) Committed					
Stabilization Arrangements		9750	0.00	0.00	0.0%
Other Commitments		9760	0.00	0.00	0.0%
d) Assigned					
Other Assignments		9780	16,830,606.00	15,501,120.00	-7.9%
e) Unassigned/Unappropriated					
Reserve for Economic Uncertainties		9789	0.00	0.00	0.0%
Unassigned/Unappropriated Amount		9790	0.00	0.00	0.0%
G. ASSETS					
1) Cash					
a) in County Treasury		9110	0.00		
1) Fair Value Adjustment to Cash in County Treasury		9111	0.00		
b) in Banks		9120	0.00		
c) in Revolving Cash Account		9130	0.00		
d) with Fiscal Agent/Trustee		9135	0.00		
e) Collections Awaiting Deposit		9140	0.00		

Description	Resource Codes	Object Codes	2025-26 Estimated Actuals	2026-27 Budget	Percent Difference
2) Investments		9150	0.00		
3) Accounts Receivable		9200	0.00		
4) Due from Grantor Government		9290	0.00		
5) Due from Other Funds		9310	0.00		
6) Stores		9320	0.00		
7) Prepaid Expenditures		9330	0.00		
8) Other Current Assets		9340	0.00		
9) Lease Receivable		9380	0.00		
10) TOTAL, ASSETS			0.00		
H. DEFERRED OUTFLOWS OF RESOURCES					
1) Deferred Outflows of Resources		9490	0.00		
2) TOTAL, DEFERRED OUTFLOWS			0.00		
I. LIABILITIES					
1) Accounts Payable		9500	0.00		
2) Due to Grantor Governments		9590	0.00		
3) Due to Other Funds		9610	0.00		
4) Current Loans		9640	0.00		
5) Unearned Revenue		9650	0.00		
6) TOTAL, LIABILITIES			0.00		
J. DEFERRED INFLOWS OF RESOURCES					
1) Deferred Inflows of Resources		9690	0.00		
2) TOTAL, DEFERRED INFLOWS			0.00		
K. FUND EQUITY					
Ending Fund Balance, June 30 (G10 + H2) - (I6 + J2)			0.00		
FEDERAL REVENUE					
All Other Federal Revenue		8290	0.00	0.00	0.0%
TOTAL, FEDERAL REVENUE			0.00	0.00	0.0%
OTHER STATE REVENUE					
Tax Relief Subventions					
Voted Indebtedness Levies					
Homeowners' Exemptions		8571	0.00	0.00	0.0%
Other Subventions/In-Lieu Taxes		8572	0.00	0.00	0.0%
TOTAL, OTHER STATE REVENUE			0.00	0.00	0.0%
OTHER LOCAL REVENUE					
Other Local Revenue					
County and District Taxes					
Voted Indebtedness Levies					
Secured Roll		8611	16,483,029.00	16,483,029.00	0.0%
Unsecured Roll		8612	447,706.00	447,706.00	0.0%
Prior Years' Taxes		8613	132,877.00	132,877.00	0.0%
Supplemental Taxes		8614	108,076.00	108,076.00	0.0%
Penalties and Interest from Delinquent Non-LCFF Taxes		8629	0.00	0.00	0.0%
Interest		8660	100,798.00	100,798.00	0.0%
Net Increase (Decrease) in the Fair Value of Investments		8662	0.00	0.00	0.0%
Other Local Revenue					
All Other Local Revenue		8699	0.00	0.00	0.0%
All Other Transfers In from All Others		8799	0.00	0.00	0.0%
TOTAL, OTHER LOCAL REVENUE			17,272,486.00	17,272,486.00	0.0%
TOTAL, REVENUES			17,272,486.00	17,272,486.00	0.0%
OTHER OUTGO (excluding Transfers of Indirect Costs)					
Debt Service					
Bond Redemptions		7433	6,371,804.00	6,371,804.00	0.0%
Bond Interest and Other Service Charges		7434	12,230,168.00	12,230,168.00	0.0%
Debt Service - Interest		7438	0.00	0.00	0.0%
Other Debt Service - Principal		7439	0.00	0.00	0.0%
TOTAL, OTHER OUTGO (excluding Transfers of Indirect Costs)			18,601,972.00	18,601,972.00	0.0%
TOTAL, EXPENDITURES			18,601,972.00	18,601,972.00	0.0%
INTERFUND TRANSFERS					
INTERFUND TRANSFERS IN					

Description	Resource Codes	Object Codes	2025-26 Estimated Actuals	2026-27 Budget	Percent Difference
Other Authorized Interfund Transfers In		8919	0.00	0.00	0.0%
(a) TOTAL, INTERFUND TRANSFERS IN			0.00	0.00	0.0%
INTERFUND TRANSFERS OUT					
To: General Fund		7614	0.00	0.00	0.0%
Other Authorized Interfund Transfers Out		7619	0.00	0.00	0.0%
(b) TOTAL, INTERFUND TRANSFERS OUT			0.00	0.00	0.0%
OTHER SOURCES/USES					
SOURCES					
Other Sources					
Transfers from Funds of Lapsed/Reorganized LEAs		8965	0.00	0.00	0.0%
All Other Financing Sources		8979	0.00	0.00	0.0%
(c) TOTAL, SOURCES			0.00	0.00	0.0%
USES					
Transfers of Funds from Lapsed/Reorganized LEAs		7651	0.00	0.00	0.0%
All Other Financing Uses		7699	0.00	0.00	0.0%
(d) TOTAL, USES			0.00	0.00	0.0%
CONTRIBUTIONS					
Contributions from Unrestricted Revenues		8980	0.00	0.00	0.0%
Contributions from Restricted Revenues		8990	0.00	0.00	0.0%
(e) TOTAL, CONTRIBUTIONS			0.00	0.00	0.0%
TOTAL, OTHER FINANCING SOURCES/USES (a - b + c - d + e)			0.00	0.00	0.0%

Description	Function Codes	Object Codes	2025-26 Estimated Actuals	2026-27 Budget	Percent Difference
A. REVENUES					
1) LCFF Sources		8010-8099	0.00	0.00	0.0%
2) Federal Revenue		8100-8299	0.00	0.00	0.0%
3) Other State Revenue		8300-8599	0.00	0.00	0.0%
4) Other Local Revenue		8600-8799	17,272,486.00	17,272,486.00	0.0%
5) TOTAL, REVENUES			17,272,486.00	17,272,486.00	0.0%
B. EXPENDITURES (Objects 1000-7999)					
1) Instruction	1000-1999		0.00	0.00	0.0%
2) Instruction - Related Services	2000-2999		0.00	0.00	0.0%
3) Pupil Services	3000-3999		0.00	0.00	0.0%
4) Ancillary Services	4000-4999		0.00	0.00	0.0%
5) Community Services	5000-5999		0.00	0.00	0.0%
6) Enterprise	6000-6999		0.00	0.00	0.0%
7) General Administration	7000-7999		0.00	0.00	0.0%
8) Plant Services	8000-8999		0.00	0.00	0.0%
9) Other Outgo	9000-9999	Except 7600-7699	18,601,972.00	18,601,972.00	0.0%
10) TOTAL, EXPENDITURES			18,601,972.00	18,601,972.00	0.0%
C. EXCESS (DEFICIENCY) OF REVENUES OVER EXPENDITURES BEFORE OTHER FINANCING SOURCES AND USES (A5 -B10)			(1,329,486.00)	(1,329,486.00)	0.0%
D. OTHER FINANCING SOURCES/USES					
1) Interfund Transfers					
a) Transfers In		8900-8929	0.00	0.00	0.0%
b) Transfers Out		7600-7629	0.00	0.00	0.0%
2) Other Sources/Uses					
a) Sources		8930-8979	0.00	0.00	0.0%
b) Uses		7630-7699	0.00	0.00	0.0%
3) Contributions		8980-8999	0.00	0.00	0.0%
4) TOTAL, OTHER FINANCING SOURCES/USES			0.00	0.00	0.0%
E. NET INCREASE (DECREASE) IN FUND BALANCE (C + D4)			(1,329,486.00)	(1,329,486.00)	0.0%
F. FUND BALANCE, RESERVES					
1) Beginning Fund Balance					
a) As of July 1 - Unaudited		9791	18,160,092.00	16,830,606.00	-7.3%
b) Audit Adjustments		9793	0.00	0.00	0.0%
c) As of July 1 - Audited (F1a + F1b)			18,160,092.00	16,830,606.00	-7.3%
d) Other Restatements		9795	0.00	0.00	0.0%
e) Adjusted Beginning Balance (F1c + F1d)			18,160,092.00	16,830,606.00	-7.3%
2) Ending Balance, June 30 (E + F1e)			16,830,606.00	15,501,120.00	-7.9%
Components of Ending Fund Balance					
a) Nonspendable					
Revolving Cash		9711	0.00	0.00	0.0%
Stores		9712	0.00	0.00	0.0%
Prepaid Items		9713	0.00	0.00	0.0%
All Others		9719	0.00	0.00	0.0%
b) Restricted		9740	0.00	0.00	0.0%
c) Committed					
Stabilization Arrangements		9750	0.00	0.00	0.0%
Other Commitments (by Resource/Object)		9760	0.00	0.00	0.0%
d) Assigned					
Other Assignments (by Resource/Object)		9780	16,830,606.00	15,501,120.00	-7.9%
e) Unassigned/Unappropriated					
Reserve for Economic Uncertainties		9789	0.00	0.00	0.0%
Unassigned/Unappropriated Amount		9790	0.00	0.00	0.0%

Resource	Description	2025-26 Estimated Actuals	2026-27 Budget
Total, Restricted Balance		0.00	0.00

Description	Resource Codes	Object Codes	2025-26 Estimated Actuals	2026-27 Budget	Percent Difference
A. REVENUES					
1) LCFF Sources		8010-8099	0.00	0.00	0.0%
2) Federal Revenue		8100-8299	0.00	0.00	0.0%
3) Other State Revenue		8300-8599	0.00	0.00	0.0%
4) Other Local Revenue		8600-8799	500,000.00	500,000.00	0.0%
5) TOTAL, REVENUES			500,000.00	500,000.00	0.0%
B. EXPENSES					
1) Certificated Salaries		1000-1999	0.00	0.00	0.0%
2) Classified Salaries		2000-2999	0.00	0.00	0.0%
3) Employee Benefits		3000-3999	0.00	0.00	0.0%
4) Books and Supplies		4000-4999	0.00	0.00	0.0%
5) Services and Other Operating Expenses		5000-5999	2,358,959.00	2,358,959.00	0.0%
6) Depreciation and Amortization		6000-6999	0.00	0.00	0.0%
7) Other Outgo (excluding Transfers of Indirect Costs)		7100-7299, 7400-7499	0.00	0.00	0.0%
8) Other Outgo - Transfers of Indirect Costs		7300-7399	0.00	0.00	0.0%
9) TOTAL, EXPENSES			2,358,959.00	2,358,959.00	0.0%
C. EXCESS (DEFICIENCY) OF REVENUES OVER EXPENSES BEFORE OTHER FINANCING SOURCES AND USES (A5 - B9)			(1,858,959.00)	(1,858,959.00)	0.0%
D. OTHER FINANCING SOURCES/USES					
1) Interfund Transfers					
a) Transfers In		8900-8929	2,000,000.00	1,750,000.00	-12.5%
b) Transfers Out		7600-7629	0.00	0.00	0.0%
2) Other Sources/Uses					
a) Sources		8930-8979	0.00	0.00	0.0%
b) Uses		7630-7699	0.00	0.00	0.0%
3) Contributions		8980-8999	0.00	0.00	0.0%
4) TOTAL, OTHER FINANCING SOURCES/USES			2,000,000.00	1,750,000.00	-12.5%
E. NET INCREASE (DECREASE) IN NET POSITION (C + D4)			141,041.00	(108,959.00)	-177.3%
F. NET POSITION					
1) Beginning Net Position					
a) As of July 1 - Unaudited		9791	0.00	141,041.00	New
b) Audit Adjustments		9793	0.00	0.00	0.0%
c) As of July 1 - Audited (F1a + F1b)			0.00	141,041.00	New
d) Other Restatements		9795	0.00	0.00	0.0%
e) Adjusted Beginning Net Position (F1c + F1d)			0.00	141,041.00	New
2) Ending Net Position, June 30 (E + F1e)			141,041.00	32,082.00	-77.3%
Components of Ending Net Position					
a) Net Investment in Capital Assets		9796	0.00	0.00	0.0%
b) Restricted Net Position		9797	0.00	0.00	0.0%
c) Unrestricted Net Position		9790	141,041.00	32,082.00	-77.3%
G. ASSETS					
1) Cash					
a) in County Treasury		9110	0.00		
1) Fair Value Adjustment to Cash in County Treasury		9111	0.00		
b) in Banks		9120	0.00		
c) in Revolving Cash Account		9130	0.00		
d) with Fiscal Agent/Trustee		9135	0.00		
e) Collections Awaiting Deposit		9140	0.00		
2) Investments		9150	0.00		
3) Accounts Receivable		9200	0.00		
4) Due from Grantor Government		9290	0.00		
5) Due from Other Funds		9310	0.00		
6) Stores		9320	0.00		
7) Prepaid Expenditures		9330	0.00		
8) Other Current Assets		9340	0.00		
9) Lease Receivable		9380	0.00		
10) Fixed Assets					
a) Land		9410	0.00		
b) Land Improvements		9420	0.00		

Description	Resource Codes	Object Codes	2025-26 Estimated Actuals	2026-27 Budget	Percent Difference
c) Accumulated Depreciation - Land Improvements		9425	0.00		
d) Buildings		9430	0.00		
e) Accumulated Depreciation - Buildings		9435	0.00		
f) Equipment		9440	0.00		
g) Accumulated Depreciation - Equipment		9445	0.00		
h) Work in Progress		9450	0.00		
i) Lease Assets		9460	0.00		
j) Accumulated Amortization-Lease Assets		9465	0.00		
k) Subscription Assets		9470	0.00		
l) Accumulated Amortization-Subscription Assets		9475	0.00		
11) TOTAL, ASSETS			0.00		
H. DEFERRED OUTFLOWS OF RESOURCES					
1) Deferred Outflows of Resources		9490	0.00		
2) TOTAL, DEFERRED OUTFLOWS			0.00		
I. LIABILITIES					
1) Accounts Payable		9500	0.00		
2) Due to Grantor Governments		9590	0.00		
3) Due to Other Funds		9610	0.00		
4) Current Loans		9640			
5) Unearned Revenue		9650	0.00		
6) Long-Term Liabilities					
a) Subscription Liability		9660	0.00		
b) Net Pension Liability		9663	0.00		
c) Total/Net OPEB Liability		9664	0.00		
d) Compensated Absences		9665	0.00		
e) COPs Payable		9666	0.00		
f) Leases Payable		9667	0.00		
g) Lease Revenue Bonds Payable		9668	0.00		
h) Other General Long-Term Liabilities		9669	0.00		
7) TOTAL, LIABILITIES			0.00		
J. DEFERRED INFLOWS OF RESOURCES					
1) Deferred Inflows of Resources		9690	0.00		
2) TOTAL, DEFERRED INFLOWS			0.00		
K. NET POSITION					
Net Position, June 30 (G11 + H2) - (I7 + J2)			0.00		
OTHER STATE REVENUE					
STRS On-Behalf Pension Contributions	7690	8590	0.00	0.00	0.0%
All Other State Revenue	All Other	8590	0.00	0.00	0.0%
TOTAL, OTHER STATE REVENUE			0.00	0.00	0.0%
OTHER LOCAL REVENUE					
Other Local Revenue					
Sales					
Sale of Equipment/Supplies		8631	0.00	0.00	0.0%
Interest		8660	0.00	0.00	0.0%
Net Increase (Decrease) in the Fair Value of Investments		8662	0.00	0.00	0.0%
Fees and Contracts					
In-District Premiums/					
Contributions		8674	500,000.00	500,000.00	0.0%
All Other Fees and Contracts		8689	0.00	0.00	0.0%
Other Local Revenue					
All Other Local Revenue		8699	0.00	0.00	0.0%
All Other Transfers In from All Others		8799	0.00	0.00	0.0%
TOTAL, OTHER LOCAL REVENUE			500,000.00	500,000.00	0.0%
TOTAL, REVENUES			500,000.00	500,000.00	0.0%
CERTIFICATED SALARIES					
Certificated Pupil Support Salaries		1200	0.00	0.00	0.0%
Certificated Supervisors' and Administrators' Salaries		1300	0.00	0.00	0.0%
TOTAL, CERTIFICATED SALARIES			0.00	0.00	0.0%
CLASSIFIED SALARIES					

Description	Resource Codes	Object Codes	2025-26 Estimated Actuals	2026-27 Budget	Percent Difference
Classified Support Salaries		2200	0.00	0.00	0.0%
Classified Supervisors' and Administrators' Salaries		2300	0.00	0.00	0.0%
Clerical, Technical and Office Salaries		2400	0.00	0.00	0.0%
Other Classified Salaries		2900	0.00	0.00	0.0%
TOTAL, CLASSIFIED SALARIES			0.00	0.00	0.0%
EMPLOYEE BENEFITS					
STRS		3101-3102	0.00	0.00	0.0%
PERS		3201-3202	0.00	0.00	0.0%
OASDI/Medicare/Alternative		3301-3302	0.00	0.00	0.0%
Health and Welfare Benefits		3401-3402	0.00	0.00	0.0%
Unemployment Insurance		3501-3502	0.00	0.00	0.0%
Workers' Compensation		3601-3602	0.00	0.00	0.0%
OPEB, Allocated		3701-3702	0.00	0.00	0.0%
OPEB, Active Employees		3751-3752	0.00	0.00	0.0%
Other Employee Benefits		3901-3902	0.00	0.00	0.0%
TOTAL, EMPLOYEE BENEFITS			0.00	0.00	0.0%
BOOKS AND SUPPLIES					
Books and Other Reference Materials		4200	0.00	0.00	0.0%
Materials and Supplies		4300	0.00	0.00	0.0%
Noncapitalized Equipment		4400	0.00	0.00	0.0%
TOTAL, BOOKS AND SUPPLIES			0.00	0.00	0.0%
SERVICES AND OTHER OPERATING EXPENSES					
Subagreements for Services		5100	0.00	0.00	0.0%
Travel and Conferences		5200	0.00	0.00	0.0%
Dues and Memberships		5300	0.00	0.00	0.0%
Insurance		5400-5499	0.00	0.00	0.0%
Operations and Housekeeping Services		5500	0.00	0.00	0.0%
Rentals, Leases, Repairs, and Noncapitalized Improvements		5600	0.00	0.00	0.0%
Transfers of Direct Costs - Interfund		5750	0.00	0.00	0.0%
Professional/Consulting Services and					
Operating Expenditures		5800-5899	2,358,959.00	2,358,959.00	0.0%
Communications		5900	0.00	0.00	0.0%
TOTAL, SERVICES AND OTHER OPERATING EXPENSES			2,358,959.00	2,358,959.00	0.0%
DEPRECIATION AND AMORTIZATION					
Depreciation Expense		6900	0.00	0.00	0.0%
Amortization Expense-Lease Assets		6910	0.00	0.00	0.0%
Amortization Expense-Subscription Assets		6920	0.00	0.00	0.0%
TOTAL, DEPRECIATION AND AMORTIZATION			0.00	0.00	0.0%
TOTAL, EXPENSES			2,358,959.00	2,358,959.00	0.0%
INTERFUND TRANSFERS					
INTERFUND TRANSFERS IN					
Other Authorized Interfund Transfers In		8919	2,000,000.00	1,750,000.00	-12.5%
(a) TOTAL, INTERFUND TRANSFERS IN			2,000,000.00	1,750,000.00	-12.5%
INTERFUND TRANSFERS OUT					
Other Authorized Interfund Transfers Out		7619	0.00	0.00	0.0%
(b) TOTAL, INTERFUND TRANSFERS OUT			0.00	0.00	0.0%
OTHER SOURCES/USES					
SOURCES					
Other Sources					
Transfers from Funds of Lapsed/Reorganized LEAs		8965	0.00	0.00	0.0%
(c) TOTAL, SOURCES			0.00	0.00	0.0%
USES					
Transfers of Funds from Lapsed/Reorganized LEAs		7651	0.00	0.00	0.0%
(d) TOTAL, USES			0.00	0.00	0.0%
CONTRIBUTIONS					
Contributions from Unrestricted Revenues		8980	0.00	0.00	0.0%
Contributions from Restricted Revenues		8990	0.00	0.00	0.0%
(e) TOTAL, CONTRIBUTIONS			0.00	0.00	0.0%
TOTAL, OTHER FINANCING SOURCES/USES					

Description	Resource Codes	Object Codes	2025-26 Estimated Actuals	2026-27 Budget	Percent Difference
(a - b + c - d + e)			2,000,000.00	1,750,000.00	-12.5%

Description	Function Codes	Object Codes	2025-26 Estimated Actuals	2026-27 Budget	Percent Difference
A. REVENUES					
1) LCFF Sources		8010-8099	0.00	0.00	0.0%
2) Federal Revenue		8100-8299	0.00	0.00	0.0%
3) Other State Revenue		8300-8599	0.00	0.00	0.0%
4) Other Local Revenue		8600-8799	500,000.00	500,000.00	0.0%
5) TOTAL, REVENUES			500,000.00	500,000.00	0.0%
B. EXPENSES (Objects 1000-7999)					
1) Instruction	1000-1999		0.00	0.00	0.0%
2) Instruction - Related Services	2000-2999		0.00	0.00	0.0%
3) Pupil Services	3000-3999		0.00	0.00	0.0%
4) Ancillary Services	4000-4999		0.00	0.00	0.0%
5) Community Services	5000-5999		0.00	0.00	0.0%
6) Enterprise	6000-6999		2,358,959.00	2,358,959.00	0.0%
7) General Administration	7000-7999		0.00	0.00	0.0%
8) Plant Services	8000-8999		0.00	0.00	0.0%
9) Other Outgo	9000-9999	Except 7600-7699	0.00	0.00	0.0%
10) TOTAL, EXPENSES			2,358,959.00	2,358,959.00	0.0%
C. EXCESS (DEFICIENCY) OF REVENUES OVER EXPENSES BEFORE OTHER FINANCING SOURCES AND USES (A5 - B10)			(1,858,959.00)	(1,858,959.00)	0.0%
D. OTHER FINANCING SOURCES/USES					
1) Interfund Transfers					
a) Transfers In		8900-8929	2,000,000.00	1,750,000.00	-12.5%
b) Transfers Out		7600-7629	0.00	0.00	0.0%
2) Other Sources/Uses					
a) Sources		8930-8979	0.00	0.00	0.0%
b) Uses		7630-7699	0.00	0.00	0.0%
3) Contributions		8980-8999	0.00	0.00	0.0%
4) TOTAL, OTHER FINANCING SOURCES/USES			2,000,000.00	1,750,000.00	-12.5%
E. NET INCREASE (DECREASE) IN NET POSITION (C + D4)			141,041.00	(108,959.00)	-177.3%
F. NET POSITION					
1) Beginning Net Position					
a) As of July 1 - Unaudited		9791	0.00	141,041.00	New
b) Audit Adjustments		9793	0.00	0.00	0.0%
c) As of July 1 - Audited (F1a + F1b)			0.00	141,041.00	New
d) Other Restatements		9795	0.00	0.00	0.0%
e) Adjusted Beginning Net Position (F1c + F1d)			0.00	141,041.00	New
2) Ending Net Position, June 30 (E + F1e)			141,041.00	32,082.00	-77.3%
Components of Ending Net Position					
a) Net Investment in Capital Assets		9796	0.00	0.00	0.0%
b) Restricted Net Position		9797	0.00	0.00	0.0%
c) Unrestricted Net Position		9790	141,041.00	32,082.00	-77.3%

Resource	Description	2025-26 Estimated Actuals	2026-27 Budget
Total, Restricted Net Position		0.00	0.00

Description	2025-26 Estimated Actuals			2026-27 Budget		
	P-2 ADA	Annual ADA	Funded ADA	Estimated P-2 ADA	Estimated Annual ADA	Estimated Funded ADA
A. DISTRICT						
1. Total District Regular ADA Includes Opportunity Classes, Home & Hospital, Special Day Class, Continuation Education, Special Education NPS/LCI and Extended Year, and Community Day School (includes Necessary Small School ADA)	13,048.63	13,048.63	13,425.58	12,893.00	12,893.00	13,301.76
2. Total Basic Aid Choice/Court Ordered Voluntary Pupil Transfer Regular ADA Includes Opportunity Classes, Home & Hospital, Special Day Class, Continuation Education, Special Education NPS/LCI and Extended Year, and Community Day School (ADA not included in Line A1 above)						
3. Total Basic Aid Open Enrollment Regular ADA Includes Opportunity Classes, Home & Hospital, Special Day Class, Continuation Education, Special Education NPS/LCI and Extended Year, and Community Day School (ADA not included in Line A1 above)						
4. Total, District Regular ADA (Sum of Lines A1 through A3)	13,048.63	13,048.63	13,425.58	12,893.00	12,893.00	13,301.76
5. District Funded County Program ADA						
a. County Community Schools	15.00	15.00	15.00	15.00	15.00	15.00
b. Special Education-Special Day Class						
c. Special Education-NPS/LCI						
d. Special Education Extended Year						
e. Other County Operated Programs: Opportunity Schools and Full Day Opportunity Classes, Specialized Secondary Schools						
f. County School Tuition Fund (Out of State Tuition) [EC 2000 and 46380]						
g. Total, District Funded County Program ADA (Sum of Lines A5a through A5f)	15.00	15.00	15.00	15.00	15.00	15.00
6. TOTAL DISTRICT ADA (Sum of Line A4 and Line A5g)	13,063.63	13,063.63	13,440.58	12,908.00	12,908.00	13,316.76
7. Adults in Correctional Facilities						
8. Charter School ADA (Enter Charter School ADA using Tab C. Charter School ADA)						

Description	2025-26 Estimated Actuals			2026-27 Budget		
	P-2 ADA	Annual ADA	Funded ADA	Estimated P-2 ADA	Estimated Annual ADA	Estimated Funded ADA
B. COUNTY OFFICE OF EDUCATION						
1. County Program Alternative Education Grant ADA						
a. County Group Home and Institution Pupils						
b. Juvenile Halls, Homes, and Camps						
c. Probation Referred, On Probation or Parole, Expelled per EC 48915(a) or (c) [EC 2574(c)(4)(A)]						
d. Total, County Program Alternative Education ADA (Sum of Lines B1a through B1c)	0.00	0.00	0.00	0.00	0.00	0.00
2. District Funded County Program ADA						
a. County Community Schools						
b. Special Education-Special Day Class						
c. Special Education-NPS/LCI						
d. Special Education Extended Year						
e. Other County Operated Programs: Opportunity Schools and Full Day Opportunity Classes, Specialized Secondary Schools						
f. County School Tuition Fund (Out of State Tuition) [EC 2000 and 46380]						
g. Total, District Funded County Program ADA (Sum of Lines B2a through B2f)	0.00	0.00	0.00	0.00	0.00	0.00
3. TOTAL COUNTY OFFICE ADA (Sum of Lines B1d and B2g)	0.00	0.00	0.00	0.00	0.00	0.00
4. Adults in Correctional Facilities						
5. County Operations Grant ADA						
6. Charter School ADA (Enter Charter School ADA using Tab C. Charter School ADA)						

Description	2025-26 Estimated Actuals			2026-27 Budget		
	P-2 ADA	Annual ADA	Funded ADA	Estimated P-2 ADA	Estimated Annual ADA	Estimated Funded ADA
C. CHARTER SCHOOL ADA						
Authorizing LEAs reporting charter school SACS financial data in their Fund 01, 09, or 62 use this worksheet to report ADA for those charter schools.						
Charter schools reporting SACS financial data separately from their authorizing LEAs in Fund 01 or Fund 62 use this worksheet to report their ADA.						
FUND 01: Charter School ADA corresponding to SACS financial data reported in Fund 01.						
1. Total Charter School Regular ADA						
2. Charter School County Program Alternative Education ADA						
a. County Group Home and Institution Pupils						
b. Juvenile Halls, Homes, and Camps						
c. Probation Referred, On Probation or Parole, Expelled per EC 48915(a) or (c) [EC 2574(c)(4)(A)]						
d. Total, Charter School County Program Alternative Education ADA (Sum of Lines C2a through C2c)	0.00	0.00	0.00	0.00	0.00	0.00
3. Charter School Funded County Program ADA						
a. County Community Schools						
b. Special Education-Special Day Class						
c. Special Education-NPS/LCI						
d. Special Education Extended Year						
e. Other County Operated Programs: Opportunity Schools and Full Day Opportunity Classes, Specialized Secondary Schools						
f. Total, Charter School Funded County Program ADA (Sum of Lines C3a through C3e)	0.00	0.00	0.00	0.00	0.00	0.00
4. TOTAL CHARTER SCHOOL ADA (Sum of Lines C1, C2d, and C3f)	0.00	0.00	0.00	0.00	0.00	0.00
FUND 09 or 62: Charter School ADA corresponding to SACS financial data reported in Fund 09 or Fund 62.						
5. Total Charter School Regular ADA						
6. Charter School County Program Alternative Education ADA						
a. County Group Home and Institution Pupils						
b. Juvenile Halls, Homes, and Camps						
c. Probation Referred, On Probation or Parole, Expelled per EC 48915(a) or (c) [EC 2574(c)(4)(A)]						
d. Total, Charter School County Program Alternative Education ADA (Sum of Lines C6a through C6c)	0.00	0.00	0.00	0.00	0.00	0.00
7. Charter School Funded County Program ADA						
a. County Community Schools						
b. Special Education-Special Day Class						
c. Special Education-NPS/LCI						
d. Special Education Extended Year						
e. Other County Operated Programs: Opportunity Schools and Full Day Opportunity Classes, Specialized Secondary Schools						
f. Total, Charter School Funded County Program ADA (Sum of Lines C7a through C7e)	0.00	0.00	0.00	0.00	0.00	0.00
8. TOTAL CHARTER SCHOOL ADA (Sum of Lines C5, C6d, and C7f)	0.00	0.00	0.00	0.00	0.00	0.00
9. TOTAL CHARTER SCHOOL ADA Reported in Fund 01, 09, or 62 (Sum of Lines C4 and C8)	0.00	0.00	0.00	0.00	0.00	0.00

Description	Object	Beginning Balances (Ref. Only)	July	August	September	October	November	December	January	February
ESTIMATES THROUGH THE MONTH OF:	JUNE									
A. BEGINNING CASH			23,404,262.39	26,461,349.22	18,836,901.16	10,832,594.96	14,849,631.97	7,691,094.02	25,476,119.77	28,651,661.57
B. RECEIPTS										
LCFF Sources										
Principal Apportionment	8010-8019		3,807,316.15	3,807,316.15	6,853,169.07	6,853,169.07	6,853,169.07	12,453,003.82	6,853,169.07	6,853,169.07
Property Taxes	8020-8079		388,118.89	776,237.77	0.00	0.00	776,237.77	19,405,944.25	11,643,566.55	2,328,713.31
Miscellaneous Funds	8080-8099		0.00	0.00	0.00	0.00	0.00	0.00	0.00	0.00
Federal Revenue	8100-8299		0.00	0.00	0.00	0.00	341,324.00	209,362.50	749,518.00	341,324.00
Other State Revenue	8300-8599		1,411,630.50	1,819,491.50	2,540,934.90	6,108,966.15	3,398,651.40	3,718,793.40	2,807,589.40	3,730,278.65
Other Local Revenue	8600-8799		0.00	0.00	416,329.00	222,619.00	222,619.00	416,329.00	1,333,067.10	1,551,455.00
Interfund Transfers In	8900-8929		0.00	0.00	0.00	0.00	0.00	0.00	0.00	0.00
All Other Financing Sources	8930-8979		0.00	0.00	0.00	0.00	0.00	0.00	0.00	0.00
TOTAL RECEIPTS			5,607,065.54	6,403,045.42	9,810,432.97	13,184,754.22	11,592,001.24	36,203,432.97	23,386,910.12	14,804,940.03
C. DISBURSEMENTS										
Certificated Salaries	1000-1999		51,806.65	7,313,371.95	7,503,329.67	7,632,846.29	7,753,728.47	7,650,115.17	7,693,287.38	7,710,556.26
Classified Salaries	2000-2999		397,977.73	1,591,910.92	3,183,821.84	3,581,799.57	3,581,799.57	3,621,597.34	3,621,597.34	3,621,597.34
Employee Benefits	3000-3999		104,232.88	2,345,239.69	4,534,130.07	4,586,246.51	4,586,246.51	4,638,362.95	4,638,362.95	4,690,479.38
Books and Supplies	4000-4999		480,649.32	720,973.98	480,649.32	720,973.98	720,973.98	400,541.10	720,973.98	640,865.76
Services	5000-5999		1,976,639.54	2,986,921.96	3,074,772.61	3,074,772.61	3,074,772.61	3,074,772.61	3,514,025.84	3,514,025.84
Capital Outlay	6000-6999		0.00	40,500.00	0.00	40,500.00	0.00	0.00	0.00	0.00
Other Outgo	7000-7499		21,179.95	13,660.15	23,120.83	23,120.83	23,120.83	23,120.83	23,120.83	23,120.83
Interfund Transfers Out	7600-7629		0.00	0.00	0.00	0.00	0.00	0.00	0.00	0.00

Description	Object	Beginning Balances (Ref. Only)	July	August	September	October	November	December	January	February
All Other Financing Uses	7630-7699		0.00	0.00	0.00	0.00	0.00	0.00	0.00	0.00
TOTAL DISBURSEMENTS			3,032,486.07	15,012,578.65	18,799,824.34	19,660,259.79	19,740,641.97	19,408,510.00	20,211,368.32	20,200,645.41
D. BALANCE SHEET ITEMS										
Assets and Deferred Outflows										
Cash Not In Treasury	9111-9199	0.00	0.00	0.00	0.00	0.00	0.00	0.00	0.00	0.00
Accounts Receivable	9200-9299	14,876,629.80	4,462,988.94	2,975,325.96	2,975,325.96	1,487,662.98	1,487,662.98	1,487,662.98	0.00	0.00
Due From Other Funds	9310	0.00	0.00	0.00	0.00	0.00	0.00	0.00	0.00	0.00
Stores	9320	0.00	0.00	0.00	0.00	0.00	0.00	0.00	0.00	0.00
Prepaid Expenditures	9330	0.00	0.00	0.00	0.00	0.00	0.00	0.00	0.00	0.00
Other Current Assets	9340	0.00	0.00	0.00	0.00	0.00	0.00	0.00	0.00	0.00
Lease Receivable	9380									
Deferred Outflows of Resources	9490	0.00	0.00	0.00	0.00	0.00	0.00	0.00	0.00	0.00
SUBTOTAL		14,876,629.80	4,462,988.94	2,975,325.96	2,975,325.96	1,487,662.98	1,487,662.98	1,487,662.98	0.00	0.00
Liabilities and Deferred Inflows										
Accounts Payable	9500-9599	9,951,203.96	3,980,481.58	1,990,240.79	1,990,240.79	995,120.40	497,560.20	497,560.20	0.00	0.00
Due To Other Funds	9610	0.00	0.00	0.00	0.00	(10,000,000.00)	0.00	0.00	0.00	0.00
Current Loans	9640	0.00	0.00	0.00	0.00	0.00	0.00	0.00	0.00	0.00
Unearned Revenues	9650	0.00	0.00	0.00	0.00	0.00	0.00	0.00	0.00	0.00
Deferred Inflows of Resources	9690	0.00	0.00	0.00	0.00	0.00	0.00	0.00	0.00	0.00
SUBTOTAL		9,951,203.96	3,980,481.58	1,990,240.79	1,990,240.79	(9,004,879.60)	497,560.20	497,560.20	0.00	0.00
Nonoperating										
Suspense Clearing	9910	0.00	0.00	0.00	0.00	0.00	0.00	0.00	0.00	0.00
TOTAL BALANCE SHEET ITEMS		4,925,425.84	482,507.36	985,085.17	985,085.17	10,492,542.58	990,102.78	990,102.78	0.00	0.00
E. NET INCREASE/DECREASE (B - C + D)			3,057,086.83	(7,624,448.06)	(8,004,306.20)	4,017,037.01	(7,158,537.95)	17,785,025.75	3,175,541.80	(5,395,705.38)
F. ENDING CASH (A + E)			26,461,349.22	18,836,901.16	10,832,594.96	14,849,631.97	7,691,094.02	25,476,119.77	28,651,661.57	23,255,956.19
G. ENDING CASH, PLUS CASH ACCRUALS AND ADJUSTMENTS										

Description	Object	March	April	May	June	Accruals	Adjustments	TOTAL	BUDGET
ESTIMATES THROUGH THE MONTH OF:	JUNE								
A. BEGINNING CASH		23,255,956.19	19,635,866.56	16,232,155.99	13,714,491.37				
B. RECEIPTS									
LCFF Sources									
Principal Apportionment	8010-8019	12,453,003.82	6,853,169.07	6,853,169.07	12,453,003.82	5,599,834.75	0.00	98,545,662.00	98,545,662.00
Property Taxes	8020-8079	0.00	17,077,230.94	8,538,615.47	16,689,112.06	0.00	0.00	77,623,777.01	77,623,777.00
Miscellaneous Funds	8080-8099	0.00	0.00	0.00	0.00	0.00	0.00	0.00	0.00
Federal Revenue	8100-8299	209,362.50	749,518.00	362,536.75	61,308.75	5,611,228.50	0.00	8,635,483.00	8,635,483.00
Other State Revenue	8300-8599	3,569,724.90	2,540,934.90	2,540,934.90	3,882,166.40	1,020,586.00	0.00	39,090,683.00	39,090,683.00
Other Local Revenue	8600-8799	407,590.50	213,880.50	222,619.00	1,570,018.00	1,389,553.90	0.00	7,966,080.00	7,966,080.00
Interfund Transfers In	8900-8929	0.00	0.00	0.00	0.00	0.00	0.00	0.00	0.00
All Other Financing Sources	8930-8979	0.00	0.00	0.00	0.00	0.00	0.00	0.00	0.00
TOTAL RECEIPTS		16,639,681.72	27,434,733.41	18,517,875.19	34,655,609.03	13,621,203.15	0.00	231,861,685.01	231,861,685.00
C. DISBURSEMENTS									
Certificated Salaries	1000-1999	7,865,976.21	7,632,846.29	7,779,631.79	7,779,631.79	1,977,287.10	0.00	86,344,415.02	86,344,415.02
Classified Salaries	2000-2999	3,661,395.11	3,661,395.11	3,661,395.11	3,780,788.43	1,830,697.56	0.00	39,797,772.97	39,797,772.98
Employee Benefits	3000-3999	4,794,712.26	4,846,828.70	4,898,945.13	4,951,061.57	2,501,589.00	0.00	52,116,437.60	52,116,437.59
Books and Supplies	4000-4999	400,541.10	720,973.98	720,973.98	801,082.20	480,649.32	0.00	8,010,822.00	8,010,822.00
Services	5000-5999	3,514,025.84	3,953,279.07	3,953,279.07	3,953,279.07	4,260,756.33	0.00	43,925,323.00	43,925,323.00
Capital Outlay	6000-6999	0.00	0.00	0.00	0.00	0.00	0.00	81,000.00	81,000.00
Other Outgo	7000-7499	23,120.83	23,120.83	21,314.73	1,326,114.53	(1,087,763.00)	0.00	479,473.00	479,473.00
Interfund Transfers Out	7600-7629	0.00	0.00	0.00	1,750,000.00	0.00	0.00	1,750,000.00	1,750,000.00
All Other Financing Uses	7630-7699	0.00	0.00	0.00	0.00	0.00	0.00	0.00	0.00

Description	Object	March	April	May	June	Accruals	Adjustments	TOTAL	BUDGET
TOTAL DISBURSEMENTS		20,259,771.35	20,838,443.98	21,035,539.81	24,341,957.59	9,963,216.31	0.00	232,505,243.59	232,505,243.59
D. BALANCE SHEET ITEMS									
Assets and Deferred Outflows									
Cash Not In Treasury	9111-9199	0.00	0.00	0.00	0.00	0.00	0.00	0.00	
Accounts Receivable	9200-9299	0.00	0.00	0.00	0.00	0.00	0.00	14,876,629.80	
Due From Other Funds	9310	0.00	0.00	0.00	0.00	0.00	0.00	0.00	
Stores	9320	0.00	0.00	0.00	0.00	0.00	0.00	0.00	
Prepaid Expenditures	9330	0.00	0.00	0.00	0.00	0.00	0.00	0.00	
Other Current Assets	9340	0.00	0.00	0.00	0.00	0.00	0.00	0.00	
Lease Receivable	9380							0.00	
Deferred Outflows of Resources	9490	0.00	0.00	0.00	0.00	0.00	0.00	0.00	
SUBTOTAL		0.00	0.00	0.00	0.00	0.00	0.00	14,876,629.80	
Liabilities and Deferred Inflows									
Accounts Payable	9500-9599	0.00	0.00	0.00	0.00	0.00	0.00	9,951,203.96	
Due To Other Funds	9610	0.00	10,000,000.00	0.00	0.00	0.00	0.00	0.00	
Current Loans	9640	0.00	0.00	0.00	0.00	0.00	0.00	0.00	
Unearned Revenues	9650	0.00	0.00	0.00	0.00	0.00	0.00	0.00	
Deferred Inflows of Resources	9690	0.00	0.00	0.00	0.00	0.00	0.00	0.00	
SUBTOTAL		0.00	10,000,000.00	0.00	0.00	0.00	0.00	9,951,203.96	
Nonoperating									
Suspense Clearing	9910	0.00	0.00	0.00	0.00	0.00	0.00	0.00	
TOTAL BALANCE SHEET ITEMS		0.00	(10,000,000.00)	0.00	0.00	0.00	0.00	4,925,425.84	
E. NET INCREASE/DECREASE (B - C + D)		(3,620,089.63)	(3,403,710.57)	(2,517,664.62)	10,313,651.44	3,657,986.84	0.00	4,281,867.26	(643,558.59)
F. ENDING CASH (A + E)		19,635,866.56	16,232,155.99	13,714,491.37	24,028,142.81				
G. ENDING CASH, PLUS CASH ACCRUALS AND ADJUSTMENTS								27,686,129.65	

Description	Object	Beginning Balances (Ref. Only)	July	August	September	October	November	December	January	February
ESTIMATES THROUGH THE MONTH OF:	JUNE									
A. BEGINNING CASH			24,028,142.81	26,789,232.44	18,873,322.96	10,585,014.66	12,898,423.24	5,625,829.41	23,748,987.23	26,902,352.32
B. RECEIPTS										
LCFF Sources										
Principal Apportionment	8010-8019		3,882,665.70	3,882,665.70	6,988,798.26	6,988,798.26	6,988,798.26	13,057,283.26	6,988,798.26	6,988,798.26
Property Taxes	8020-8079		388,118.89	776,237.77	0.00	0.00	776,237.77	19,405,944.25	11,643,566.55	2,328,713.31
Miscellaneous Funds	8080-8099		0.00	0.00	0.00	0.00	0.00	0.00	0.00	0.00
Federal Revenue	8100-8299		0.00	0.00	0.00	0.00	341,324.00	209,362.50	749,518.00	341,324.00
Other State Revenue	8300-8599		1,454,659.82	1,868,638.74	2,618,387.67	2,618,387.67	3,506,946.87	3,836,448.02	2,893,841.77	2,618,387.67
Other Local Revenue	8600-8799		0.00	0.00	403,695.82	222,619.00	222,619.00	403,695.82	1,333,067.10	1,551,455.00
Interfund Transfers In	8900-8929		0.00	0.00	0.00	0.00	0.00	0.00	0.00	0.00
All Other Financing Sources	8930-8979		0.00	0.00	0.00	0.00	0.00	0.00	0.00	0.00
TOTAL RECEIPTS			5,725,444.41	6,527,542.21	10,010,881.75	9,829,804.93	11,835,925.90	36,912,733.85	23,608,791.68	13,828,678.24
C. DISBURSEMENTS										
Certificated Salaries	1000-1999		52,364.39	7,392,106.22	7,584,108.98	7,715,019.95	7,837,203.53	7,732,474.75	7,776,111.74	7,793,566.54
Classified Salaries	2000-2999		403,673.40	1,614,693.62	3,229,387.23	3,633,060.64	3,633,060.64	3,673,427.98	3,673,427.98	3,673,427.98
Employee Benefits	3000-3999		105,354.63	2,370,479.17	4,582,926.39	4,635,603.70	4,635,603.70	4,688,281.02	4,688,281.02	4,740,958.33
Books and Supplies	4000-4999		460,889.37	691,334.06	460,889.37	691,334.06	691,334.06	384,074.48	691,334.06	614,519.16
Services	5000-5999		2,026,772.41	3,062,678.31	3,152,757.09	3,152,757.09	3,152,757.09	3,152,757.09	3,603,150.96	3,603,150.96
Capital Outlay	6000-6999		0.00	32,500.00	0.00	32,500.00	0.00	0.00	0.00	0.00
Other Outgo	7000-7499		21,179.95	13,660.15	23,120.83	23,120.83	23,120.83	23,120.83	23,120.83	23,120.83
Interfund Transfers Out	7600-7629		0.00	0.00	0.00	0.00	0.00	0.00	0.00	0.00

Description	Object	Beginning Balances (Ref. Only)	July	August	September	October	November	December	January	February
All Other Financing Uses	7630-7699		0.00	0.00	0.00	0.00	0.00	0.00	0.00	0.00
TOTAL DISBURSEMENTS			3,070,234.15	15,177,451.53	19,033,189.89	19,883,396.27	19,973,079.85	19,654,136.15	20,455,426.59	20,448,743.80
D. BALANCE SHEET ITEMS										
Assets and Deferred Outflows										
Cash Not In Treasury	9111-9199	0.00	0.00	0.00	0.00	0.00	0.00	0.00	0.00	0.00
Accounts Receivable	9200-9299	13,621,203.15	4,086,360.95	2,724,240.63	2,724,240.63	1,362,120.32	1,362,120.32	1,362,120.32	0.00	0.00
Due From Other Funds	9310	0.00	0.00	0.00	0.00	0.00	0.00	0.00	0.00	0.00
Stores	9320	0.00	0.00	0.00	0.00	0.00	0.00	0.00	0.00	0.00
Prepaid Expenditures	9330	0.00	0.00	0.00	0.00	0.00	0.00	0.00	0.00	0.00
Other Current Assets	9340	0.00	0.00	0.00	0.00	0.00	0.00	0.00	0.00	0.00
Lease Receivable	9380									
Deferred Outflows of Resources	9490	0.00	0.00	0.00	0.00	0.00	0.00	0.00	0.00	0.00
SUBTOTAL		13,621,203.15	4,086,360.95	2,724,240.63	2,724,240.63	1,362,120.32	1,362,120.32	1,362,120.32	0.00	0.00
Liabilities and Deferred Inflows										
Accounts Payable	9500-9599	9,951,203.96	3,980,481.58	1,990,240.79	1,990,240.79	995,120.40	497,560.20	497,560.20	0.00	0.00
Due To Other Funds	9610	0.00	0.00	0.00	0.00	(12,000,000.00)	0.00	0.00	0.00	0.00
Current Loans	9640	0.00	0.00	0.00	0.00	0.00	0.00	0.00	0.00	0.00
Unearned Revenues	9650	0.00	0.00	0.00	0.00	0.00	0.00	0.00	0.00	0.00
Deferred Inflows of Resources	9690	0.00	0.00	0.00	0.00	0.00	0.00	0.00	0.00	0.00
SUBTOTAL		9,951,203.96	3,980,481.58	1,990,240.79	1,990,240.79	(11,004,879.60)	497,560.20	497,560.20	0.00	0.00
Nonoperating										
Suspense Clearing	9910	0.00	0.00	0.00	0.00	0.00	0.00	0.00	0.00	0.00
TOTAL BALANCE SHEET ITEMS		3,669,999.19	105,879.37	733,999.84	733,999.84	12,366,999.92	864,560.12	864,560.12	0.00	0.00
E. NET INCREASE/DECREASE (B - C + D)			2,761,089.63	(7,915,909.48)	(8,288,308.30)	2,313,408.58	(7,272,593.83)	18,123,157.82	3,153,365.09	(6,620,065.56)
F. ENDING CASH (A + E)			26,789,232.44	18,873,322.96	10,585,014.66	12,898,423.24	5,625,829.41	23,748,987.23	26,902,352.32	20,282,286.76
G. ENDING CASH, PLUS CASH ACCRUALS AND ADJUSTMENTS										

Description	Object	March	April	May	June	Accruals	Adjustments	TOTAL	BUDGET
ESTIMATES THROUGH THE MONTH OF:	JUNE								
A. BEGINNING CASH		20,282,286.76	17,105,235.85	23,657,245.95	21,093,160.85				
B. RECEIPTS									
LCFF Sources									
Principal Apportionment	8010-8019	13,057,283.26	6,988,798.26	6,988,798.26	13,057,283.26	6,068,485.00	0.00	101,927,254.00	101,927,254.00
Property Taxes	8020-8079	0.00	17,077,230.94	8,538,615.47	16,689,112.06	0.00	0.00	77,623,777.01	77,623,777.00
Miscellaneous Funds	8080-8099	0.00	0.00	0.00	0.00	0.00	0.00	0.00	0.00
Federal Revenue	8100-8299	209,362.50	749,518.00	362,536.75	61,308.75	5,611,228.50	0.00	8,635,483.00	8,635,483.00
Other State Revenue	8300-8599	3,682,460.26	2,618,387.67	2,618,387.67	4,005,212.33	1,055,597.86	0.00	35,395,744.02	35,395,744.00
Other Local Revenue	8600-8799	394,957.32	213,880.50	222,619.00	1,557,384.82	1,389,553.90	0.00	7,915,547.28	7,915,547.26
Interfund Transfers In	8900-8929	0.00	0.00	0.00	0.00	0.00	0.00	0.00	0.00
All Other Financing Sources	8930-8979	0.00	0.00	0.00	0.00	0.00	0.00	0.00	0.00
TOTAL RECEIPTS		17,344,063.34	27,647,815.37	18,730,957.15	35,370,301.22	14,124,865.26	0.00	231,497,805.31	231,497,805.26
C. DISBURSEMENTS									
Certificated Salaries	1000-1999	7,950,659.70	7,715,019.95	7,863,385.72	7,863,385.72	1,998,574.17	0.00	87,273,981.36	87,273,981.39
Classified Salaries	2000-2999	3,713,795.32	3,713,795.32	3,713,795.32	3,834,897.34	1,856,897.66	0.00	40,367,340.43	40,367,340.43
Employee Benefits	3000-3999	4,846,312.96	4,898,990.28	4,951,667.59	5,004,344.91	2,528,511.11	0.00	52,677,314.81	52,677,314.81
Books and Supplies	4000-4999	384,074.48	691,334.06	691,334.06	768,148.95	460,889.37	0.00	7,681,489.54	7,681,489.53
Services	5000-5999	3,603,150.96	4,053,544.83	4,053,544.83	4,053,544.83	4,368,820.53	0.00	45,039,386.98	45,039,386.95
Capital Outlay	6000-6999	0.00	0.00	0.00	0.00	0.00	0.00	65,000.00	65,000.00
Other Outgo	7000-7499	23,120.83	23,120.83	21,314.73	1,326,114.53	(1,087,763.00)	0.00	479,473.00	479,473.00
Interfund Transfers Out	7600-7629	0.00	0.00	0.00	1,750,000.00	0.00	0.00	1,750,000.00	1,750,000.00
All Other Financing Uses	7630-7699	0.00	0.00	0.00	0.00	0.00	0.00	0.00	0.00

Description	Object	March	April	May	June	Accruals	Adjustments	TOTAL	BUDGET
TOTAL DISBURSEMENTS		20,521,114.25	21,095,805.27	21,295,042.25	24,600,436.28	10,125,929.84	0.00	235,333,986.12	235,333,986.11
D. BALANCE SHEET ITEMS									
Assets and Deferred Outflows									
Cash Not In Treasury	9111-9199	0.00	0.00	0.00	0.00	0.00	0.00	0.00	
Accounts Receivable	9200-9299	0.00	0.00	0.00	0.00	0.00	0.00	13,621,203.17	
Due From Other Funds	9310	0.00	0.00	0.00	0.00	0.00	0.00	0.00	
Stores	9320	0.00	0.00	0.00	0.00	0.00	0.00	0.00	
Prepaid Expenditures	9330	0.00	0.00	0.00	0.00	0.00	0.00	0.00	
Other Current Assets	9340	0.00	0.00	0.00	0.00	0.00	0.00	0.00	
Lease Receivable	9380							0.00	
Deferred Outflows of Resources	9490	0.00	0.00	0.00	0.00	0.00	0.00	0.00	
SUBTOTAL		0.00	0.00	0.00	0.00	0.00	0.00	13,621,203.17	
Liabilities and Deferred Inflows									
Accounts Payable	9500-9599	0.00	0.00	0.00	0.00	0.00	0.00	9,951,203.96	
Due To Other Funds	9610	0.00	0.00	0.00	12,000,000.00	0.00	0.00	0.00	
Current Loans	9640	0.00	0.00	0.00	0.00	0.00	0.00	0.00	
Unearned Revenues	9650	0.00	0.00	0.00	0.00	0.00	0.00	0.00	
Deferred Inflows of Resources	9690	0.00	0.00	0.00	0.00	0.00	0.00	0.00	
SUBTOTAL		0.00	0.00	0.00	12,000,000.00	0.00	0.00	9,951,203.96	
Nonoperating									
Suspense Clearing	9910	0.00	0.00	0.00	0.00	0.00	0.00	0.00	
TOTAL BALANCE SHEET ITEMS		0.00	0.00	0.00	(12,000,000.00)	0.00	0.00	3,669,999.21	
E. NET INCREASE/DECREASE (B - C + D)		(3,177,050.91)	6,552,010.10	(2,564,085.10)	(1,230,135.06)	3,998,935.42	0.00	(166,181.60)	(3,836,180.85)
F. ENDING CASH (A + E)		17,105,235.85	23,657,245.95	21,093,160.85	19,863,025.79				
G. ENDING CASH, PLUS CASH ACCRUALS AND ADJUSTMENTS								23,861,961.21	

ANNUAL BUDGET REPORT:

July 1, 2026 Budget Adoption

Select applicable boxes:

X This budget was developed using the state-adopted Criteria and Standards. It includes the expenditures necessary to implement the Local Control and Accountability Plan (LCAP) or annual update to the LCAP that will be effective for the budget year. The budget was filed and adopted subsequent to a public hearing by the governing board of the school district pursuant to Education Code sections 33129, 42127, 52060, 52061, and 52062.

X If the budget includes a combined assigned and unassigned ending fund balance above the minimum recommended reserve for economic uncertainties, at its public hearing, the school district complied with the requirements of subparagraphs (B) and (C) of paragraph (2) of subdivision (a) of Education Code Section 42127.

Budget available for inspection at:

Place: Burbank Unified School District, 1900 W. Olive Ave., Burbank, CA 91506

Date: 6/15/2026

Public Hearing:

Place: Burbank Unified School District, 1900 W. Olive Ave., Burbank, CA 91506

Date: 6/18/2026

Time: 6:00 PM

Adoption Date: 6/25/2026

Signed:

Clerk/Secretary of the Governing Board

(Original signature required)

Printed Name: Laurette Cano Title: Clerk

Contact person for additional information on the budget reports:

Name: Maricela Salinas Telephone: 818-729-4466

Title: Director of Fiscal Services E-mail: maricelasalinas@burbankusd.org

Criteria and Standards Review Summary

The following summary is automatically completed based on data provided in the Criteria and Standards Review (Form 01CS). Criteria and standards that are "Not Met," and supplemental information and additional fiscal indicators that are "Yes," may indicate areas of potential concern for fiscal solvency purposes and should be carefully reviewed.

CRITERIA AND STANDARDS			Met	Not Met
1	Average Daily Attendance	Projected (funded) ADA has not been overestimated by more than the standard for the prior fiscal year, or two or more of the previous three fiscal years.	X	
2	Enrollment	Enrollment has not been overestimated by more than the standard for the prior fiscal year, or two or more of the previous three fiscal years.	X	
3	ADA to Enrollment	Projected second period (P-2) ADA to enrollment ratio is consistent with historical ratios for the budget and two subsequent fiscal years.	X	
4	Local Control Funding Formula (LCFF) Revenue	Projected change in LCFF revenue is within the standard for the budget and two subsequent fiscal years.	X	
5	Salaries and Benefits	Projected ratios of total unrestricted salaries and benefits to total unrestricted general fund expenditures are consistent with historical ratios for the budget and two subsequent fiscal years.	X	
6a	Other Revenues	Projected operating revenues (e.g., federal, other state, and other local) are within the standard for the budget and two subsequent fiscal years.	X	
6b	Other Expenditures	Projected operating expenditures (e.g., books and supplies, and services and other operating) are within the standard for the budget and two subsequent fiscal years.	X	
7	Ongoing and Major Maintenance Account	If applicable, required contribution to the ongoing and major maintenance account (i.e., restricted maintenance account) is included in the budget.	X	
8	Deficit Spending	Unrestricted deficit spending, if any, has not exceeded the standard for two or more of the last three fiscal years.	X	

9a	Fund Balance	Unrestricted general fund beginning balance has not been overestimated by more than the standard for two or more of the last three fiscal years.	X	
9b	Cash Balance	Projected general fund cash balance will be positive at the end of the current fiscal year.	X	
10	Reserves	Projected available reserves (e.g., reserve for economic uncertainties, unassigned/unappropriated amounts) meet minimum requirements for the budget and two subsequent fiscal years.	X	
SUPPLEMENTAL INFORMATION			**No**	**Yes**
S1	Contingent Liabilities	Are there known or contingent liabilities (e.g., financial or program audits, litigation, state compliance reviews) that may impact the budget?		X
S2	Using One-time Revenues to Fund Ongoing Expenditures	Are there ongoing general fund expenditures in excess of one percent of the total general fund expenditures that are funded with one-time resources?		X
S3	Using Ongoing Revenues to Fund One-time Expenditures	Are there large non-recurring general fund expenditures that are funded with ongoing general fund revenues?	X	
S4	Contingent Revenues	Are any projected revenues for the budget or two subsequent fiscal years contingent on reauthorization by the local government, special legislation, or other definitive act (e.g., parcel taxes, forest reserves)?	X	
S5	Contributions	Have contributions from unrestricted to restricted resources, or transfers to or from the general fund to cover operating deficits, changed by more than the standard for the budget or two subsequent fiscal years?		X
SUPPLEMENTAL INFORMATION (continued)			**No**	**Yes**
S6	Long-term Commitments	Does the district have long-term (multiyear) commitments or debt agreements?		X
		• If yes, have annual payments for the budget or two subsequent fiscal years increased over prior year's (2025-26) annual payment?		X
S7a	Postemployment Benefits Other than Pensions	Does the district provide postemployment benefits other than pensions (OPEB)?		X
		• If yes, are they lifetime benefits?		X
		• If yes, do benefits continue beyond age 65?		X
		• If yes, are benefits funded by pay-as-you-go?		X
S7b	Other Self-insurance Benefits	Does the district provide other self-insurance benefits (e.g., workers' compensation, employee health and welfare, or property and liability)?		X
S8	Status of Labor Agreements	Are salary and benefit negotiations still open for:		
		• Certificated? (Section S8A, Line 1)		X
		• Classified? (Section S8B, Line 1)		X
		• Management/supervisor/confidential? (Section S8C, Line 1)	**n/a**	
S9	Local Control and Accountability Plan (LCAP)	• Did or will the school district's governing board adopt an LCAP or an update to the LCAP effective for the budget year?		X
		• Adoption date of the LCAP or an update to the LCAP:	**06/25/2026**	
S10	LCAP Expenditures	Does the school district's budget include the expenditures necessary to implement the LCAP or annual update to the LCAP as described in the Local Control and Accountability Plan and Annual Update Template?		X
ADDITIONAL FISCAL INDICATORS			**No**	**Yes**
A1	Negative Cash Flow	Do cash flow projections show that the district will end the budget year with a negative cash balance in the general fund?	X	
A2	Independent Position Control	Is personnel position control independent from the payroll system?		X
A3	Declining Enrollment	Is enrollment decreasing in both the prior fiscal year and budget year?		X
A4	New Charter Schools Impacting District Enrollment	Are any new charter schools operating in district boundaries that are impacting the district's enrollment, either in the prior fiscal year or budget year?	X	
A5	Salary Increases Exceed COLA	Has the district entered into a bargaining agreement where any of the budget or subsequent fiscal years of the agreement would result in salary increases that are expected to exceed the projected state funded cost-of-living adjustment?	X	
ADDITIONAL FISCAL INDICATORS (continued)			**No**	**Yes**
A6	Uncapped Health Benefits	Does the district provide uncapped (100% employer paid) health benefits for current or retired employees?	X	
A7	Independent Financial System	Is the district's financial system independent from the county office system?	X	

A8	Fiscal Distress Reports	Does the district have any reports that indicate fiscal distress? If yes, provide copies to the COE, pursuant to EC 42127.6(a).	X	
A9	Change of CBO or Superintendent	Have there been personnel changes in the superintendent or chief business official (CBO) positions within the last 12 months?		X

Burbank Unified
Los Angeles County

Budget, July 1
2025-26 Estimated Actuals
GENERAL FUND
Current Expense Formula/Minimum Classroom Compensation

19 64337 0000000
Form CEA
H8B8FABHZR(2026-27)

PART I - CURRENT EXPENSE FORMULA	Total Expense for Year (1)	EDP No.	Reductions (See Note 1) (2)	EDP No.	Current Expense of Education (Col 1 - Col 2) (3)	EDP No.	Reductions (Extracted) (See Note 2) (4a)	Reductions (Overrides)* (See Note 2) (4b)	EDP No.	Current Expense-Part II (Col 3 - Col 4) (5)	EDP No.
1000 - Certificated Salaries	84,082,646.00	301	5,589.00	303	84,077,057.00	305	2,631,164.00		307	81,445,893.00	309
2000 - Classified Salaries	39,332,924.00	311	180,975.00	313	39,151,949.00	315	0.00		317	39,151,949.00	319
3000 - Employee Benefits	51,250,076.98	321	1,555,832.00	323	49,694,244.98	325	9,525.00		327	49,684,719.98	329
4000 - Books, Supplies Equip Replace. (6500)	7,555,895.00	331	1,127,451.00	333	6,428,444.00	335	1,525,604.00		337	4,902,840.00	339
5000 - Services. . . & 7300 - Indirect Costs	43,609,693.05	341	425.00	343	43,609,268.05	345	18,439,125.00		347	25,170,143.05	349
			TOTAL		222,960,963.03	365			TOTAL	200,355,545.03	369

Note 1 - In Column 2, report expenditures for the following programs: Nonagency (Goals 7100-7199), Community Services (Goal 8100), Food Services (Function 3700), Fringe Benefits for Retired Persons (Objects 3701-3702), and Facilities Acquisition & Construction (Function 8500).

Note 2 - In Column 4, report expenditures for: Transportation (Function 3600), Lottery Expenditures (Resource 1100), Special Education Students in Nonpublic Schools (Function 1180), and other federal or state categorical aid in which funds were granted for expenditures in a program not incurring any teacher salary expenditures or requiring disbursement of the funds without regard to the requirements of EC Section 41372.

* If an amount (even zero) is entered in any row of Column 4b or in Line 13b, the form uses only the values in Column 4b and Line 13b rather than the values in Column 4a and Line 13a.

PART II: MINIMUM CLASSROOM COMPENSATION (Instruction, Functions 1000-1999)	Object		EDP No.
1. Teacher Salaries as Per EC 41011	1100	67,627,129.00	375
2. Salaries of Instructional Aides Per EC 41011	2100	13,025,854.00	380
3. STRS	3101 & 3102	11,926,209.00	382
4. PERS	3201 & 3202	4,161,614.00	383
5. OASDI - Regular, Medicare and Alternative	3301 & 3302	2,189,104.00	384
6. Health & Welfare Benefits (EC 41372) (Include Health, Dental, Vision, Pharmaceutical, and Annuity Plans)	3401 & 3402	11,138,966.98	385
7. Unemployment Insurance	3501 & 3502	37,289.00	390
8. Workers' Compensation Insurance	3601 & 3602	2,073,067.00	392
9. OPEB, Active Employees (EC 41372)	3751 & 3752	0.00	
10. Other Benefits (EC 22310)	3901 & 3902	0.00	393
11. SUBTOTAL Salaries and Benefits (Sum Lines 1 - 10)		112,179,232.98	395
12. Less: Teacher and Instructional Aide Salaries and Benefits deducted in Column 2		0.00	
13a. Less: Teacher and Instructional Aide Salaries and Benefits (other than Lottery) deducted in Column 4a (Extracted)		9,979.00	396
b. Less: Teacher and Instructional Aide Salaries and Benefits (other than Lottery) deducted in Column 4b (Overrides)*			396
14. TOTAL SALARIES AND BENEFITS		112,169,253.98	397
15. Percent of Current Cost of Education Expended for Classroom Compensation (EDP 397 divided by EDP 369) Line 15 must equal or exceed 60% for elementary, 55% for unified and 50% for high school districts to avoid penalty under provisions of EC 41372		55.99%	
16. District is exempt from EC 41372 because it meets the provisions of EC 41374. (If exempt, enter 'X')			

PART III: DEFICIENCY AMOUNT

A deficiency amount (Line 5) is only applicable to districts not meeting the minimum classroom compensation percentage required under EC 41372 and not exempt under the provisions of EC 41374.

1. Minimum percentage required (60% elementary, 55% unified, 50% high)	55.00%	
2. Percentage spent by this district (Part II, Line 15)	55.99%	
3. Percentage below the minimum (Part III, Line 1 minus Line 2)	0.00%	
4. District's Current Expense of Education after reductions in columns 4a or 4b (Part I, EDP 369).	200,355,545.03	
5. Deficiency Amount (Part III, Line 3 times Line 4)	0.00	

PART IV: Explanation for adjustments entered in Part I, Column 4b (required)

Burbank Unified
Los Angeles County

Budget, July 1
2026-27 Budget
GENERAL FUND
Current Expense Formula/Minimum Classroom Compensation

19 64337 0000000
Form CEB
H8B8FABHZR(2026-27)

PART I - CURRENT EXPENSE FORMULA	Total Expense for Year (1)	EDP No.	Reductions (See Note 1) (2)	EDP No.	Current Expense of Education (Col 1 - Col 2) (3)	EDP No.	Reductions (Extracted) (See Note 2) (4a)	Reductions (Overrides)* (See Note 2) (4b)	EDP No.	Current Expense- Part II (Col 3 - Col 4) (5)	EDP No.
1000 - Certificated Salaries	86,344,415.02	301	3,263.00	303	86,341,152.02	305	2,610,351.00		307	83,730,801.02	309
2000 - Classified Salaries	39,797,772.98	311	189,169.00	313	39,608,603.98	315	0.00		317	39,608,603.98	319
3000 - Employee Benefits	52,116,437.59	321	1,719,440.18	323	50,396,997.41	325	15,287.00		327	50,381,710.41	329
4000 - Books, Supplies Equip Replace. (6500)	8,010,822.00	331	38,873.00	333	7,971,949.00	335	1,525,604.00		337	6,446,345.00	339
5000 - Services. . . & 7300 - Indirect Costs	42,837,560.00	341	438.00	343	42,837,122.00	345	19,246,406.00		347	23,590,716.00	349
			TOTAL		227,155,824.41	365			TOTAL	203,758,176.41	369

Note 1 - In Column 2, report expenditures for the following programs: Nonagency (Goals 7100-7199), Community Services (Goal 8100), Food Services (Function 3700), Fringe Benefits for Retired Persons (Objects 3701-3702), and Facilities Acquisition & Construction (Function 8500).

Note 2 - In Column 4, report expenditures for: Transportation (Function 3600), Lottery Expenditures (Resource 1100), Special Education Students in Nonpublic Schools (Function 1180), and other federal or state categorical aid in which funds were granted for expenditures in a program not incurring any teacher salary expenditures or requiring disbursement of the funds without regard to the requirements of EC Section 41372.

* If an amount (even zero) is entered in any row of Column 4b or in Line 13b, the form uses only the values in Column 4b and Line 13b rather than the values in Column 4a and Line 13a.

PART II: MINIMUM CLASSROOM COMPENSATION (Instruction, Functions 1000-1999)	Object		EDP No.
1. Teacher Salaries as Per EC 41011.	1100	69,294,372.78	375
2. Salaries of Instructional Aides Per EC 41011.	2100	13,749,375.00	380
3. STRS.	3101 & 3102	12,330,020.84	382
4. PERS.	3201 & 3202	3,886,977.00	383
5. OASDI - Regular, Medicare and Alternative.	3301 & 3302	2,090,728.08	384
6. Health & Welfare Benefits (EC 41372) (Include Health, Dental, Vision, Pharmaceutical, and Annuity Plans).	3401 & 3402	11,614,619.00	385
7. Unemployment Insurance.	3501 & 3502	40,081.51	390
8. Workers' Compensation Insurance.	3601 & 3602	1,945,582.69	392
9. OPEB, Active Employees (EC 41372).	3751 & 3752	0.00	
10. Other Benefits (EC 22310).	3901 & 3902	0.00	393

11. SUBTOTAL Salaries and Benefits (Sum Lines 1 - 10)	114,951,756.90	395
12. Less: Teacher and Instructional Aide Salaries and Benefits deducted in Column 2	0.00	
13a. Less: Teacher and Instructional Aide Salaries and Benefits (other than Lottery) deducted in Column 4a (Extracted)	2,281.00	396
b. Less: Teacher and Instructional Aide Salaries and Benefits (other than Lottery) deducted in Column 4b (Overrides)*		396
14. TOTAL SALARIES AND BENEFITS	114,949,475.90	397
15. Percent of Current Cost of Education Expended for Classroom Compensation (EDP 397 divided by EDP 369) Line 15 must equal or exceed 60% for elementary, 55% for unified and 50% for high school districts to avoid penalty under provisions of EC 41372	56.41%	
16. District is exempt from EC 41372 because it meets the provisions of EC 41374. (If exempt, enter 'X')		

PART III: DEFICIENCY AMOUNT

A deficiency amount (Line 5) is only applicable to districts not meeting the minimum classroom compensation percentage required under EC 41372 and not exempt under the provisions of EC 41374.

1. Minimum percentage required (60% elementary, 55% unified, 50% high)	55.00%
2. Percentage spent by this district (Part II, Line 15)	56.41%
3. Percentage below the minimum (Part III, Line 1 minus Line 2)	0.00%
4. District's Current Expense of Education after reductions in columns 4a or 4b (Part I, EDP 369)	203,758,176.41
5. Deficiency Amount (Part III, Line 3 times Line 4)	0.00

PART IV: Explanation for adjustments entered in Part I, Column 4b (required)

Section I - Expenditures	Funds 01, 09, and 62 Goals	Functions	Objects	2025-26 Expenditures
A. Total state, federal, and local expenditures (all resources)	All	All	1000-7999	231,284,528.03
B. Less all federal expenditures not allowed for MOE (Resources 3000-5999, except 3385)	All	All	1000-7999	6,941,598.00
C. Less state and local expenditures not allowed for MOE: (All resources, except federal as identified in Line B)				
1. Community Services	All	5000-5999	1000-7999	149,264.00
2. Capital Outlay	All except 7100-7199	All except 5000-5999	6000-6999 except 6600, 6700, 6910, 6920	1,602,158.00
3. Debt Service	All	9100	5400-5450, 5800, 7430-7439	1,383,058.00
4. Other Transfers Out	All	9200	7200-7299	0.00
5. Interfund Transfers Out	All	9300	7600-7629	2,000,000.00
6. All Other Financing Uses	All	9100 9200	7699 7651	0.00
7. Nonagency	7100-7199	All except 5000-5999, 9000-9999	1000-7999	0.00
8. Tuition (Revenue, in lieu of expenditures, to approximate costs of services for which tuition is received)	All	All	8710	1,443,797.00
9. Supplemental expenditures made as a result of a Presidentially declared disaster	Manually entered. Must not include expenditures in lines B, C1-C8, D1, or D2.			
10. Total state and local expenditures not allowed for MOE calculation (Sum lines C1 through C9)				6,578,277.00
D. Plus additional MOE expenditures:				
1. Expenditures to cover deficits for food services (Funds 13 and 61) (If negative, then zero)	All	All	1000-7143, 7300-7439 minus 8000-8699	0.00
2. Expenditures to cover deficits for student body activities	Manually entered. Must not include expenditures in lines A or D1.			
E. Total expenditures subject to MOE (Line A minus lines B and C10, plus lines D1 and D2)				217,764,653.03

Section II - Expenditures Per ADA	2025-26 Annual ADA/Exps. Per ADA
A. Average Daily Attendance (Form A, Annual ADA column, sum of lines A6 and C9)	13,063.63
B. Expenditures per ADA (Line I.E divided by Line II.A)	16,669.54

Section III - MOE Calculation (For data collection only. Final determination will be done by CDE)	Total	Per ADA
A. Base expenditures (Preloaded expenditures from prior year official CDE MOE calculation). (Note: If the prior year MOE was not met, CDE has adjusted the prior year base to 90 percent of the preceding prior year amount rather than the actual prior year expenditure amount.)	212,449,438.01	15,629.38
1. Adjustment to base expenditure and expenditure per ADA amounts for LEAs failing prior year MOE calculation (From Section IV)	0.00	0.00
2. Total adjusted base expenditure amounts (Line A plus Line A.1)	212,449,438.01	15,629.38
B. Required effort (Line A.2 times 90%)	191,204,494.21	14,066.44
C. Current year expenditures (Line I.E and Line II.B)	217,764,653.03	16,669.54
D. MOE deficiency amount, if any (Line B minus Line C) (If negative, then zero)	0.00	0.00
E. MOE determination (If one or both of the amounts in line D are zero, the MOE requirement is met; if both amounts are positive, the MOE requirement is not met. If either column in Line A.2 or Line C equals zero, the MOE calculation is incomplete.)	MOE Met	

F. MOE deficiency percentage, if MOE not met; otherwise, zero (Line D divided by Line B) (Funding under ESSA covered programs in FY 2027-28 may be reduced by the lower of the two percentages)	0.00%	0.00%

SECTION IV - Detail of Adjustments to Base Expenditures (used in Section III, Line A.1)

Description of Adjustments	Total Expenditures	Expenditures Per ADA
Total adjustments to base expenditures	0.00	0.00

Part I - General Administrative Share of Plant Services Costs

California's indirect cost plan allows that the general administrative costs in the indirect cost pool may include that portion of plant services costs (maintenance and operations costs and facilities rents and leases costs) attributable to the general administrative offices. The calculation of the plant services costs attributed to general administration and included in the pool is standardized and automated using the percentage of salaries and benefits relating to general administration as proxy for the percentage of square footage occupied by general administration.

A. Salaries and Benefits - Other General Administration and Centralized Data Processing

1. Salaries and benefits paid through payroll (Funds 01, 09, and 62, objects 1000-3999 except 3701-3702)
   (Functions 7200-7700, goals 0000 and 9000) — 8,658,584.00
2. Contracted general administrative positions not paid through payroll
   a. Enter the costs, if any, of general administrative positions performing services ON SITE but paid through a contract, rather than through payroll, in functions 7200-7700, goals 0000 and 9000, Object 5800.
   b. If an amount is entered on Line A2a, provide the title, duties, and approximate FTE of each general administrative position paid through a contract. Retain supporting documentation in case of audit.

B. Salaries and Benefits - All Other Activities

1. Salaries and benefits paid through payroll (Funds 01, 09, and 62, objects 1000-3999 except 3701-3702)
   (Functions 1000-6999, 7100-7180, & 8100-8400; Functions 7200-7700, all goals except 0000 & 9000) — 164,464,972.98

C. Percentage of Plant Services Costs Attributable to General Administration

(Line A1 plus Line A2a, divided by Line B1; zero if negative) (See Part III, Lines A5 and A6) — 5.26%

Part II - Adjustments for Employment Separation Costs

When an employee separates from service, the local educational agency (LEA) may incur costs associated with the separation in addition to the employee's regular salary and benefits for the final pay period. These additional costs can be categorized as "normal" or "abnormal or mass" separation costs.

Normal separation costs include items such as pay for accumulated unused leave or routine severance pay authorized by governing board policy. Normal separation costs are not allowable as direct costs to federal programs, but are allowable as indirect costs. State programs may have similar restrictions. Where federal or state program guidelines required that the LEA charge an employee's normal separation costs to an unrestricted resource rather than to the restricted program in which the employee worked, the LEA may identify and enter these costs on Line A for inclusion in the indirect cost pool.

Abnormal or mass separation costs are those costs resulting from actions taken by an LEA to influence employees to terminate their employment earlier than they normally would have. Abnormal or mass separation costs include retirement incentives such as a Golden Handshake or severance packages negotiated to effect termination. Abnormal or mass separation costs may not be charged to federal programs as either direct costs or indirect costs. Where an LEA paid abnormal or mass separation costs on behalf of positions in general administrative functions included in the indirect cost pool, the LEA must identify and enter these costs on Line B for exclusion from the pool.

A. Normal Separation Costs (optional)

Enter any normal separation costs paid on behalf of employees of restricted state or federal programs that were charged to an unrestricted resource (0000-1999) in funds 01, 09, and 62 with functions 1000-6999 or 8100-8400 rather than to the restricted program. These costs will be moved in Part III from base costs to the indirect cost pool. Retain supporting documentation.

B. Abnormal or Mass Separation Costs (required)

Enter any abnormal or mass separation costs paid on behalf of general administrative positions charged to unrestricted resources (0000-1999) in funds 01, 09, and 62 with functions 7200-7700. These costs will be moved in Part III from the indirect cost pool to base costs. If none, enter zero. — **Entry required**

Part III - Indirect Cost Rate Calculation (Funds 01, 09, and 62, unless indicated otherwise)

A. Indirect Costs

1. Other General Administration, less portion charged to restricted resources or specific goals
   (Functions 7200-7600, objects 1000-5999, minus Line B9) — 14,458,481.00
2. Centralized Data Processing, less portion charged to restricted resources or specific goals
   (Function 7700, objects 1000-5999, minus Line B10) — 3,214,808.00

3. External Financial Audit - Single Audit (Function 7190, resources 0000-1999, goals 0000 and 9000, objects 5000 - 5999)	235,000.00
4. Staff Relations and Negotiations (Function 7120, resources 0000-1999, goals 0000 and 9000, objects 1000 - 5999)	0.00
5. Plant Maintenance and Operations (portion relating to general administrative offices only)	
(Functions 8100-8400, objects 1000-5999 except 5100, times Part I, Line C)	1,037,184.05
6. Facilities Rents and Leases (portion relating to general administrative offices only)	
(Function 8700, resources 0000-1999, objects 1000-5999 except 5100, times Part I, Line C)	0.00
7. Adjustment for Employment Separation Costs	
a. Plus: Normal Separation Costs (Part II, Line A)	0.00
b. Less: Abnormal or Mass Separation Costs (Part II, Line B)	0.00
8. Total Indirect Costs (Lines A1 through A7a, minus Line A7b)	18,945,473.05
9. Carry-Forward Adjustment (Part IV, Line F)	2,521,742.25
10. Total Adjusted Indirect Costs (Line A8 plus Line A9)	21,467,215.31
B. Base Costs	
1. Instruction (Functions 1000-1999, objects 1000-5999 except 5100)	143,446,856.03
2. Instruction-Related Services (Functions 2000-2999, objects 1000-5999 except 5100)	23,124,608.00
3. Pupil Services (Functions 3000-3999, objects 1000-5999 except 4700 and 5100)	18,848,376.00
4. Ancillary Services (Functions 4000-4999, objects 1000-5999 except 5100)	1,758,717.00
5. Community Services (Functions 5000-5999, objects 1000-5999 except 5100)	149,958.00
6. Enterprise (Function 6000, objects 1000-5999 except 4700 and 5100)	5,100.00
7. Board and Superintendent (Functions 7100-7180, objects 1000-5999, minus Part III, Line A4)	423,047.00
8. External Financial Audit - Single Audit and Other (Functions 7190-7191, objects 5000 - 5999, minus Part III, Line A3)	0.00
9. Other General Administration (portion charged to restricted resources or specific goals only)	
(Functions 7200-7600, resources 2000-9999, objects 1000-5999; Functions 7200-7600,	
resources 0000-1999, all goals except 0000 and 9000, objects 1000-5999)	83,968.00
10. Centralized Data Processing (portion charged to restricted resources or specific goals only)	
(Function 7700, resources 2000-9999, objects 1000-5999; Function 7700, resources 0000-1999, all goals	
except 0000 and 9000, objects 1000-5999)	0.00
11. Plant Maintenance and Operations (all except portion relating to general administrative offices)	
(Functions 8100-8400, objects 1000-5999 except 5100, minus Part III, Line A5)	18,681,143.95
12. Facilities Rents and Leases (all except portion relating to general administrative offices)	
(Function 8700, objects 1000-5999 except 5100, minus Part III, Line A6)	0.00
13. Adjustment for Employment Separation Costs	
a. Less: Normal Separation Costs (Part II, Line A)	0.00
b. Plus: Abnormal or Mass Separation Costs (Part II, Line B)	0.00
14. Student Activity (Fund 08, functions 4000-5999, objects 1000-5999 except 5100)	0.00
15. Adult Education (Fund 11, functions 1000-6999, 8100-8400, and 8700, objects 1000-5999 except 5100)	6,946,275.00
16. Child Development (Fund 12, functions 1000-6999, 8100-8400 & 8700, objects 1000-5999 except 4700 & 5100)	3,065,018.00
17. Cafeteria (Funds 13 & 61, functions 1000-6999, 8100-8400 & 8700, objects 1000-5999 except 4700 & 5100)	4,012,150.00
18. Foundation (Funds 19 & 57, functions 1000-6999, 8100-8400 & 8700, objects 1000-5999 except 4700 & 5100)	0.00
19. Total Base Costs (Lines B1 through B12 and Lines B13b through B18, minus Line B13a)	220,545,216.98
C. Straight Indirect Cost Percentage Before Carry-Forward Adjustment	
(For information only - not for use when claiming/recovering indirect costs)	
(Line A8 divided by Line B19)	8.59%
D. Preliminary Proposed Indirect Cost Rate	
(For final approved fixed-with-carry-forward rate for use in 2027-28 see www.cde.ca.gov/fg/ac/ic)	
(Line A10 divided by Line B19)	9.73%

Part IV - Carry-forward Adjustment

The carry-forward adjustment is an after-the-fact adjustment for the difference between indirect costs recoverable using the indirect cost rate approved for use in a given year, and the actual indirect costs incurred in that year. The carry-forward adjustment eliminates

the need for LEAs to file amended federal reports when their actual indirect costs vary from the estimated indirect costs on which the approved rate was based.

Where the ratio of indirect costs incurred in the current year is less than the estimated ratio of indirect costs on which the approved rate for use in the current year was based, the carry-forward adjustment is limited by using either the approved rate times current year base costs, or the highest rate actually used to recover costs from any program times current year base costs, if the highest rate used was less than the approved rate. Rates used to recover costs from programs are displayed in Exhibit A.

A. Indirect costs incurred in the current year (Part III, Line A8)	18,945,473.05
B. Carry-forward adjustment from prior year(s)	
1. Carry-forward adjustment from the second prior year	(2,154,455.26)
2. Carry-forward adjustment amount deferred from prior year(s), if any	0.00
C. Carry-forward adjustment for under- or over-recovery in the current year	
1. Under-recovery: Part III, Line A8, plus carry-forward adjustment from prior years, minus (approved indirect cost rate (6.47%) times Part III, Line B19); zero if negative	2,521,742.25
2. Over-recovery: Part III, Line A8, plus carry-forward adjustment from prior years, minus the lesser of (approved indirect cost rate (6.47%) times Part III, Line B19) or (the highest rate used to recover costs from any program (6.47%) times Part III, Line B19); zero if positive	0.00
D. Preliminary carry-forward adjustment (Line C1 or C2)	2,521,742.25
E. Optional allocation of negative carry-forward adjustment over more than one year	
Where a negative carry-forward adjustment causes the proposed approved rate to fall below zero or would reduce the rate at which the LEA could recover indirect costs to such an extent that it would cause the LEA significant fiscal harm, the LEA may request that the carry-forward adjustment be allocated over more than one year. Where allocation of a negative carry-forward adjustment over more than one year does not resolve a negative rate, the CDE will work with the LEA on a case-by-case basis to establish an approved rate.	
Option 1. Preliminary proposed approved rate (Part III, Line D) if entire negative carry-forward adjustment is applied to the current year calculation:	not applicable
Option 2. Preliminary proposed approved rate (Part III, Line D) if one-half of negative carry-forward adjustment is applied to the current year calculation and the remainder is deferred to one or more future years:	not applicable
Option 3. Preliminary proposed approved rate (Part III, Line D) if one-third of negative carry-forward adjustment is applied to the current year calculation and the remainder is deferred to one or more future years:	not applicable
LEA request for Option 1, Option 2, or Option 3	1
F. Carry-forward adjustment used in Part III, Line A9 (Line D minus amount deferred if Option 2 or Option 3 is selected)	2,521,742.25

Approved indirect cost rate: 6.47%

Highest rate used in any program: 6.47%

Fund	Resource	Eligible Expenditures (Objects 1000-5999 except 4700 & 5100)	Indirect Costs Charged (Objects 7310 and 7350)	Rate Used
01	2600	3,847,523.00	248,934.00	6.47%
01	3010	1,756,100.00	113,618.00	6.47%
01	3550	80,939.00	5,236.00	6.47%
01	4035	315,652.00	2,151.00	0.68%
01	4127	20,000.00	1,294.00	6.47%
01	4201	107,699.00	3,439.00	3.19%
01	4203	230,102.00	14,043.00	6.10%
01	6010	153,823.00	9,952.00	6.47%
01	6266	210,602.98	13,600.00	6.46%
01	6385	22,470.00	1,081.00	4.81%
01	6387	545,835.00	26,991.00	4.94%
01	6388	278,602.00	18,017.00	6.47%
01	7412	497,641.42	17,150.00	3.45%
01	7413	76,590.05	2,381.00	3.11%
01	8150	6,434,040.00	416,282.00	6.47%
11	6371	37,151.00	2,403.00	6.47%
11	6391	5,684,794.00	277,518.00	4.88%
12	6105	543,608.00	27,880.00	5.13%
12	9010	2,500,673.00	161,746.00	6.47%
13	5310	4,012,150.00	248,753.00	6.20%

Burbank Unified
Los Angeles County

Budget, July 1
2025-26 Estimated Actuals
LOTTERY REPORT
Revenues, Expenditures and
Ending Balances - All Funds

19 64337 0000000
Form L
H8B8FABHZR(2026-27)

Description	Object Codes	Lottery: Unrestricted (Resource 1100)	Transferred to Other Resources for Expenditure	Lottery: Instructional Materials (Resource 6300)*	Totals
A. AMOUNT AVAILABLE FOR THIS FISCAL YEAR					
1. Adjusted Beginning Fund Balance	9791-9795	.31	5.00	1,511,964.80	1,511,970.11
2. State Lottery Revenue	8560	2,591,550.00		1,118,458.00	3,710,008.00
3. Other Local Revenue	8600-8799	0.00		0.00	0.00
4. Transfers from Funds of Lapsed/Reorganized Districts	8965	0.00		0.00	0.00
5. Proceeds from SBITAs	8974	0.00		0.00	0.00
6. Contributions from Unrestricted Resources (Total must be zero)	8980	0.00			0.00
7. Total Available (Sum Lines A1 through A6)		2,591,550.31	5.00	2,630,422.80	5,221,978.11
B. EXPENDITURES AND OTHER FINANCING USES					
1. Certificated Salaries	1000-1999	2,591,550.00		0.00	2,591,550.00
2. Classified Salaries	2000-2999	0.00		0.00	0.00
3. Employee Benefits	3000-3999	0.00		0.00	0.00
4. Books and Supplies	4000-4999	0.00		1,520,212.00	1,520,212.00
5. a. Services and Other Operating Expenditures (Resource 1100)	5000-5999	0.00			0.00
b. Services and Other Operating Expenditures (Resource 6300)	5000-5999, except 5100, 5710, 5800			0.00	0.00
c. Duplicating Costs for Instructional Materials (Resource 6300)	5100, 5710, 5800			800.00	800.00
6. Capital Outlay	6000-6999	0.00		0.00	0.00
7. Tuition	7100-7199	0.00			0.00
8. Interagency Transfers Out					
a. To Other Districts, County Offices, and Charter Schools	7211, 7212, 7221, 7222, 7281, 7282	0.00			0.00
b. To JPAs and All Others	7213, 7223, 7283, 7299	0.00			0.00
9. Transfers of Indirect Costs	7300-7399	0.00			0.00
10. Debt Service	7400-7499	0.00			0.00
11. All Other Financing Uses	7630-7699	0.00			0.00
12. Total Expenditures and Other Financing Uses (Sum Lines B1 through B11)		2,591,550.00	0.00	1,521,012.00	4,112,562.00
C. ENDING BALANCE (Must equal Line A7 minus Line B12)	979Z	.31	5.00	1,109,410.80	1,109,416.11

D. COMMENTS:

Explanation needed for amounts in shaded cells for Resource 6300.

Data from this report will be used to prepare a report to the Legislature as required by Control Section 24.60 of the Budget Act.

*Pursuant to Government Code Section 8880.4(a)(2)(B) and the definition in Education Code Section 60010(h), Resource 6300 funds are to be used for the purchase of instructional materials only. Any amounts in the shaded cells of this column should be reviewed for appropriateness.

Description	Object Codes	2026-27 Budget (Form 01) (A)	% Change (Cols. C-A/A) (B)	2027-28 Projection (C)	% Change (Cols. E-C/C) (D)	2028-29 Projection (E)
(Enter projections for subsequent years 1 and 2 in Columns C and E; current year - Column A - is extracted)						
A. REVENUES AND OTHER FINANCING SOURCES						
1. LCFF Sources	8010-8099	176,169,439.00	1.92%	179,551,031.00	1.29%	181,868,750.00
2. Federal Revenues	8100-8299	0.00	0.00%	0.00	0.00%	0.00
3. Other State Revenues	8300-8599	6,077,175.00	3.40%	6,283,983.05	4.39%	6,559,882.82
4. Other Local Revenues	8600-8799	1,037,439.00	-4.87%	986,906.26	0.00%	986,906.26
5. Other Financing Sources						
a. Transfers In	8900-8929	0.00	0.00%	0.00	0.00%	0.00
b. Other Sources	8930-8979	0.00	0.00%	0.00	0.00%	0.00
c. Contributions	8980-8999	(41,109,278.00)	3.86%	(42,697,165.13)	1.48%	(43,331,193.20)
6. Total (Sum lines A1 thru A5c)		142,174,775.00	1.37%	144,124,755.18	1.36%	146,084,345.88
B. EXPENDITURES AND OTHER FINANCING USES						
1. Certificated Salaries						
a. Base Salaries				68,756,656.96		69,422,606.83
b. Step & Column Adjustment				1,025,949.87		1,041,339.09
c. Cost-of-Living Adjustment				0.00		0.00
d. Other Adjustments				(360,000.00)		0.00
e. Total Certificated Salaries (Sum lines B1a thru B1d)	1000-1999	68,756,656.96	0.97%	69,422,606.83	1.50%	70,463,945.92
2. Classified Salaries						
a. Base Salaries				20,895,096.98		21,208,523.44
b. Step & Column Adjustment				313,426.46		318,127.85
c. Cost-of-Living Adjustment				0.00		0.00
d. Other Adjustments				0.00		0.00
e. Total Classified Salaries (Sum lines B2a thru B2d)	2000-2999	20,895,096.98	1.50%	21,208,523.44	1.50%	21,526,651.29
3. Employee Benefits	3000-3999	36,808,604.39	0.94%	37,155,695.51	0.42%	37,310,070.75
4. Books and Supplies	4000-4999	1,838,799.00	3.18%	1,897,272.80	2.76%	1,949,637.52
5. Services and Other Operating Expenditures	5000-5999	18,024,321.00	3.23%	18,605,912.57	2.80%	19,126,742.08
6. Capital Outlay	6000-6999	16,000.00	-100.00%	0.00	0.00%	0.00
7. Other Outgo (excluding Transfers of Indirect Costs)	7100-7299, 7400-7499	244,065.00	0.00%	244,065.00	0.00%	244,065.00
8. Other Outgo - Transfers of Indirect Costs	7300-7399	(2,408,413.00)	-25.20%	(1,801,384.23)	0.79%	(1,815,622.71)
9. Other Financing Uses						
a. Transfers Out	7600-7629	1,750,000.00	0.00%	1,750,000.00	0.00%	1,750,000.00
b. Other Uses	7630-7699	0.00	0.00%	0.00	0.00%	0.00
10. Other Adjustments (Explain in Section F below)				0.00		0.00
11. Total (Sum lines B1 thru B10)		145,925,130.33	1.75%	148,482,691.92	1.40%	150,555,489.85

Description	Object Codes	2026-27 Budget (Form 01) (A)	% Change (Cols. C-A/A) (B)	2027-28 Projection (C)	% Change (Cols. E-C/C) (D)	2028-29 Projection (E)
C. NET INCREASE (DECREASE) IN FUND BALANCE (Line A6 minus line B11)		(3,750,355.33)		(4,357,936.74)		(4,471,143.97)
D. FUND BALANCE						
1. Net Beginning Fund Balance (Form 01, line F1e)		19,816,626.99		16,066,271.66		11,708,334.92
2. Ending Fund Balance (Sum lines C and D1)		16,066,271.66		11,708,334.92		7,237,190.95
3. Components of Ending Fund Balance						
a. Nonspendable	9710-9719	45,000.00		45,000.00		45,000.00
b. Restricted	9740					
c. Committed						
1. Stabilization Arrangements	9750	0.00		0.00		0.00
2. Other Commitments	9760	0.00		0.00		0.00
d. Assigned	9780	9,046,111.66		4,603,314.92		28,833.95
e. Unassigned/Unappropriated						
1. Reserve for Economic Uncertainties	9789	6,975,160.00		7,060,020.00		7,163,357.00
2. Unassigned/Unappropriated	9790	0.00		0.00		0.00
f. Total Components of Ending Fund Balance (Line D3f must agree with line D2)		16,066,271.66		11,708,334.92		7,237,190.95
E. AVAILABLE RESERVES						
1. General Fund						
a. Stabilization Arrangements	9750	0.00		0.00		0.00
b. Reserve for Economic Uncertainties	9789	6,975,160.00		7,060,020.00		7,163,357.00
c. Unassigned/Unappropriated	9790	0.00		0.00		0.00
(Enter reserve projections for subsequent years 1 and 2 in Columns C and E; current year - Column A - is extracted.)						
2. Special Reserve Fund - Noncapital Outlay (Fund 17)						
a. Stabilization Arrangements	9750			0.00		0.00
b. Reserve for Economic Uncertainties	9789			0.00		0.00
c. Unassigned/Unappropriated	9790			0.00		0.00
3. Total Available Reserves (Sum lines E1a thru E2c)		6,975,160.00		7,060,020.00		7,163,357.00

F. ASSUMPTIONS

Please provide below or on a separate attachment, the assumptions used to determine the projections for the first and second subsequent fiscal years. Further, please include an explanation for any significant expenditure adjustments projected in lines B1d, B2d, and B10. For additional information, please refer to the Budget Assumptions section of the SACS Financial Reporting Software User Guide.

See Attached

Description	Object Codes	2026-27 Budget (Form 01) (A)	% Change (Cols. C-A/A) (B)	2027-28 Projection (C)	% Change (Cols. E-C/C) (D)	2028-29 Projection (E)
(Enter projections for subsequent years 1 and 2 in Columns C and E; current year - Column A - is extracted)						
A. REVENUES AND OTHER FINANCING SOURCES						
1. LCFF Sources	8010-8099	0.00	0.00%	0.00	0.00%	0.00
2. Federal Revenues	8100-8299	8,635,483.00	0.00%	8,635,483.00	0.00%	8,635,483.00
3. Other State Revenues	8300-8599	33,013,508.00	-11.82%	29,111,760.95	2.92%	29,962,319.91
4. Other Local Revenues	8600-8799	6,928,641.00	0.00%	6,928,641.00	0.00%	6,928,641.00
5. Other Financing Sources						
a. Transfers In	8900-8929	0.00	0.00%	0.00	0.00%	0.00
b. Other Sources	8930-8979	0.00	0.00%	0.00	0.00%	0.00
c. Contributions	8980-8999	41,109,278.00	3.86%	42,697,165.13	1.48%	43,331,193.20
6. Total (Sum lines A1 thru A5c)		89,686,910.00	-2.58%	87,373,050.08	1.70%	88,857,637.11
B. EXPENDITURES AND OTHER FINANCING USES						
1. Certificated Salaries						
a. Base Salaries				17,587,758.06		17,851,374.56
b. Step & Column Adjustment				263,816.46		267,770.60
c. Cost-of-Living Adjustment				0.00		0.00
d. Other Adjustments				(199.96)		0.00
e. Total Certificated Salaries (Sum lines B1a thru B1d)	1000-1999	17,587,758.06	1.50%	17,851,374.56	1.50%	18,119,145.16
2. Classified Salaries						
a. Base Salaries				18,902,676.00		19,158,816.99
b. Step & Column Adjustment				259,046.96		262,888.97
c. Cost-of-Living Adjustment				0.00		0.00
d. Other Adjustments				(2,905.97)		0.00
e. Total Classified Salaries (Sum lines B2a thru B2d)	2000-2999	18,902,676.00	1.36%	19,158,816.99	1.37%	19,421,705.96
3. Employee Benefits	3000-3999	15,307,833.20	1.40%	15,521,619.30	-0.07%	15,511,419.23
4. Books and Supplies	4000-4999	6,172,023.00	-6.28%	5,784,216.73	2.05%	5,902,585.58
5. Services and Other Operating Expenditures	5000-5999	25,901,002.00	2.06%	26,433,474.38	2.72%	27,152,168.94
6. Capital Outlay	6000-6999	65,000.00	0.00%	65,000.00	0.00%	65,000.00
7. Other Outgo (excluding Transfers of Indirect Costs)	7100-7299, 7400-7499	1,323,171.00	0.00%	1,323,171.00	0.00%	1,323,171.00
8. Other Outgo - Transfers of Indirect Costs	7300-7399	1,320,650.00	-45.96%	713,621.23	2.00%	727,859.71
9. Other Financing Uses						
a. Transfers Out	7600-7629	0.00	0.00%	0.00	0.00%	0.00
b. Other Uses	7630-7699	0.00	0.00%	0.00	0.00%	0.00
10. Other Adjustments (Explain in Section F below)				0.00		0.00
11. Total (Sum lines B1 thru B10)		86,580,113.26	0.31%	86,851,294.19	1.58%	88,223,055.58
C. NET INCREASE (DECREASE) IN FUND BALANCE (Line A6 minus line B11)		3,106,796.74		521,755.89		634,581.53

Description	Object Codes	2026-27 Budget (Form 01) (A)	% Change (Cols. C-A/A) (B)	2027-28 Projection (C)	% Change (Cols. E-C/C) (D)	2028-29 Projection (E)
D. FUND BALANCE						
1. Net Beginning Fund Balance (Form 01, line F1e)		18,820,973.72		21,927,770.46		22,449,526.35
2. Ending Fund Balance (Sum lines C and D1)		21,927,770.46		22,449,526.35		23,084,107.88
3. Components of Ending Fund Balance						
a. Nonspendable	9710-9719	0.00		0.00		0.00
b. Restricted	9740	21,927,771.72		22,449,526.35		23,084,107.88
c. Committed						
1. Stabilization Arrangements	9750					
2. Other Commitments	9760					
d. Assigned	9780					
e. Unassigned/Unappropriated						
1. Reserve for Economic Uncertainties	9789					
2. Unassigned/Unappropriated	9790	(1.26)		0.00		0.00
f. Total Components of Ending Fund Balance (Line D3f must agree with line D2)		21,927,770.46		22,449,526.35		23,084,107.88
E. AVAILABLE RESERVES						
1. General Fund						
a. Stabilization Arrangements	9750					
b. Reserve for Economic Uncertainties	9789					
c. Unassigned/Unappropriated	9790					
(Enter reserve projections for subsequent years 1 and 2 in Columns C and E; current year - Column A - is extracted.)						
2. Special Reserve Fund - Noncapital Outlay (Fund 17)						
a. Stabilization Arrangements	9750					
b. Reserve for Economic Uncertainties	9789					
c. Unassigned/Unappropriated	9790					
3. Total Available Reserves (Sum lines E1a thru E2c)						

F. ASSUMPTIONS

Please provide below or on a separate attachment, the assumptions used to determine the projections for the first and second subsequent fiscal years. Further, please include an explanation for any significant expenditure adjustments projected in lines B1d, B2d, and B10. For additional information, please refer to the Budget Assumptions section of the SACS Financial Reporting Software User Guide.

See Attached

Description	Object Codes	2026-27 Budget (Form 01) (A)	% Change (Cols. C-A/A) (B)	2027-28 Projection (C)	% Change (Cols. E-C/C) (D)	2028-29 Projection (E)
(Enter projections for subsequent years 1 and 2 in Columns C and E; current year - Column A - is extracted)						
A. REVENUES AND OTHER FINANCING SOURCES						
1. LCFF Sources	8010-8099	176,169,439.00	1.92%	179,551,031.00	1.29%	181,868,750.00
2. Federal Revenues	8100-8299	8,635,483.00	0.00%	8,635,483.00	0.00%	8,635,483.00
3. Other State Revenues	8300-8599	39,090,683.00	-9.45%	35,395,744.00	3.18%	36,522,202.73
4. Other Local Revenues	8600-8799	7,966,080.00	-0.63%	7,915,547.26	0.00%	7,915,547.26
5. Other Financing Sources						
a. Transfers In	8900-8929	0.00	0.00%	0.00	0.00%	0.00
b. Other Sources	8930-8979	0.00	0.00%	0.00	0.00%	0.00
c. Contributions	8980-8999	0.00	0.00%	0.00	0.00%	0.00
6. Total (Sum lines A1 thru A5c)		231,861,685.00	-0.16%	231,497,805.26	1.49%	234,941,982.99
B. EXPENDITURES AND OTHER FINANCING USES						
1. Certificated Salaries						
a. Base Salaries				86,344,415.02		87,273,981.39
b. Step & Column Adjustment				1,289,766.33		1,309,109.69
c. Cost-of-Living Adjustment				0.00		0.00
d. Other Adjustments				(360,199.96)		0.00
e. Total Certificated Salaries (Sum lines B1a thru B1d)	1000-1999	86,344,415.02	1.08%	87,273,981.39	1.50%	88,583,091.08
2. Classified Salaries						
a. Base Salaries				39,797,772.98		40,367,340.43
b. Step & Column Adjustment				572,473.42		581,016.82
c. Cost-of-Living Adjustment				0.00		0.00
d. Other Adjustments				(2,905.97)		0.00
e. Total Classified Salaries (Sum lines B2a thru B2d)	2000-2999	39,797,772.98	1.43%	40,367,340.43	1.44%	40,948,357.25
3. Employee Benefits	3000-3999	52,116,437.59	1.08%	52,677,314.81	0.27%	52,821,489.98
4. Books and Supplies	4000-4999	8,010,822.00	-4.11%	7,681,489.53	2.22%	7,852,223.10
5. Services and Other Operating Expenditures	5000-5999	43,925,323.00	2.54%	45,039,386.95	2.75%	46,278,911.02
6. Capital Outlay	6000-6999	81,000.00	-19.75%	65,000.00	0.00%	65,000.00
7. Other Outgo (excluding Transfers of Indirect Costs)	7100-7299, 7400-7499	1,567,236.00	0.00%	1,567,236.00	0.00%	1,567,236.00
8. Other Outgo - Transfers of Indirect Costs	7300-7399	(1,087,763.00)	0.00%	(1,087,763.00)	0.00%	(1,087,763.00)
9. Other Financing Uses						
a. Transfers Out	7600-7629	1,750,000.00	0.00%	1,750,000.00	0.00%	1,750,000.00
b. Other Uses	7630-7699	0.00	0.00%	0.00	0.00%	0.00
10. Other Adjustments				0.00		0.00
11. Total (Sum lines B1 thru B10)		232,505,243.59	1.22%	235,333,986.11	1.46%	238,778,545.43
C. NET INCREASE (DECREASE) IN FUND BALANCE (Line A6 minus line B11)		(643,558.59)		(3,836,180.85)		(3,836,562.44)

Description	Object Codes	2026-27 Budget (Form 01) (A)	% Change (Cols. C-A/A) (B)	2027-28 Projection (C)	% Change (Cols. E-C/C) (D)	2028-29 Projection (E)
D. FUND BALANCE						
1. Net Beginning Fund Balance (Form 01, line F1e)		38,637,600.71		37,994,042.12		34,157,861.27
2. Ending Fund Balance (Sum lines C and D1)		37,994,042.12		34,157,861.27		30,321,298.83
3. Components of Ending Fund Balance						
a. Nonspendable	9710-9719	45,000.00		45,000.00		45,000.00
b. Restricted	9740	21,927,771.72		22,449,526.35		23,084,107.88
c. Committed						
1. Stabilization Arrangements	9750	0.00		0.00		0.00
2. Other Commitments	9760	0.00		0.00		0.00
d. Assigned	9780	9,046,111.66		4,603,314.92		28,833.95
e. Unassigned/Unappropriated						
1. Reserve for Economic Uncertainties	9789	6,975,160.00		7,060,020.00		7,163,357.00
2. Unassigned/Unappropriated	9790	(1.26)		0.00		0.00
f. Total Components of Ending Fund Balance (Line D3f must agree with line D2)		37,994,042.12		34,157,861.27		30,321,298.83
E. AVAILABLE RESERVES						
1. General Fund						
a. Stabilization Arrangements	9750	0.00		0.00		0.00
b. Reserve for Economic Uncertainties	9789	6,975,160.00		7,060,020.00		7,163,357.00
c. Unassigned/Unappropriated	9790	0.00		0.00		0.00
d. Negative Restricted Ending Balances (Negative resources 2000-9999)	979Z	(1.26)		0.00		0.00
2. Special Reserve Fund - Noncapital Outlay (Fund 17)						
a. Stabilization Arrangements	9750	0.00		0.00		0.00
b. Reserve for Economic Uncertainties	9789	0.00		0.00		0.00
c. Unassigned/Unappropriated	9790	0.00		0.00		0.00
3. Total Available Reserves - by Amount (Sum lines E1a thru E2c)		6,975,158.74		7,060,020.00		7,163,357.00
4. Total Available Reserves - by Percent (Line E3 divided by Line F3c)		3.00%		3.00%		3.00%
F. RECOMMENDED RESERVES						
1. Special Education Pass-through Exclusions						
For districts that serve as the administrative unit (AU) of a special education local plan area (SELPA):						
a. Do you choose to exclude from the reserve calculation the pass-through funds distributed to SELPA members?	YES					

Description	Object Codes	2026-27 Budget (Form 01) (A)	% Change (Cols. C-A/A) (B)	2027-28 Projection (C)	% Change (Cols. E-C/C) (D)	2028-29 Projection (E)
b. If you are the SELPA AU and are excluding special education pass-through funds:						
1. Enter the name(s) of the SELPA(s):						
2. Special education pass-through funds (Column A: Fund 10, resources 3300-3499, 6500-6540 and 6546, objects 7211-7213 and 7221-7223; enter projections for subsequent years 1 and 2 in Columns C and E)		0.00				
2. District ADA						
Used to determine the reserve standard percentage level on line F3d (Col. A: Form A, Estimated P-2 ADA column, Lines A4 and C4; enter projections)		12,893.00		12,739.00		12,586.00
3. Calculating the Reserves						
a. Expenditures and Other Financing Uses (Line B11)		232,505,243.59		235,333,986.11		238,778,545.43
b. Plus: Special Education Pass-through Funds (Line F1b2, if Line F1a is No)		0.00		0.00		0.00
c. Total Expenditures and Other Financing Uses (Line F3a plus line F3b)		232,505,243.59		235,333,986.11		238,778,545.43
d. Reserve Standard Percentage Level (Refer to Form 01CS, Criterion 10 for calculation details)		3.00%		3.00%		3.00%
e. Reserve Standard - By Percent (Line F3c times F3d)		6,975,157.31		7,060,019.58		7,163,356.36
f. Reserve Standard - By Amount (Refer to Form 01CS, Criterion 10 for calculation details)		0.00		0.00		0.00
g. Reserve Standard (Greater of Line F3e or F3f)		6,975,157.31		7,060,019.58		7,163,356.36
h. Available Reserves (Line E3) Meet Reserve Standard (Line F3g)		YES		YES		YES

Burbank Unified
Los Angeles County

Budget, July 1
2025-26 Estimated Actuals
SUMMARY OF INTERFUND ACTIVITIES
FOR ALL FUNDS

19 64337 0000000
Form SIAA
H8B8FABHZR(2026-27)

Description	Direct Costs - Interfund		Indirect Costs - Interfund		Interfund Transfers In 8900-8929	Interfund Transfers Out 7600-7629	Due From Other Funds 9310	Due To Other Funds 9610
	Transfers In 5750	Transfers Out 5750	Transfers In 7350	Transfers Out 7350				
01 GENERAL FUND								
Expenditure Detail	0.00	(9,619.00)	0.00	(762,431.00)				
Other Sources/Uses Detail					0.00	2,000,000.00		
Fund Reconciliation							0.00	0.00
08 STUDENT ACTIVITY SPECIAL REVENUE FUND								
Expenditure Detail	0.00	0.00	0.00	0.00				
Other Sources/Uses Detail					0.00	0.00		
Fund Reconciliation							0.00	0.00
09 CHARTER SCHOOLS SPECIAL REVENUE FUND								
Expenditure Detail	0.00	0.00	0.00	0.00				
Other Sources/Uses Detail					0.00	0.00		
Fund Reconciliation							0.00	0.00
10 SPECIAL EDUCATION PASS-THROUGH FUND								
Expenditure Detail								
Other Sources/Uses Detail								
Fund Reconciliation							0.00	0.00
11 ADULT EDUCATION FUND								
Expenditure Detail	8,865.00	0.00	324,052.00	0.00				
Other Sources/Uses Detail					0.00	0.00		
Fund Reconciliation							0.00	0.00
12 CHILD DEVELOPMENT FUND								
Expenditure Detail	130.00	0.00	189,626.00	0.00				
Other Sources/Uses Detail					0.00	0.00		
Fund Reconciliation							0.00	0.00
13 CAFETERIA SPECIAL REVENUE FUND								
Expenditure Detail	624.00	0.00	248,753.00	0.00				
Other Sources/Uses Detail					0.00	0.00		
Fund Reconciliation							0.00	0.00
14 DEFERRED MAINTENANCE FUND								
Expenditure Detail	0.00	0.00						
Other Sources/Uses Detail					0.00	0.00		
Fund Reconciliation							0.00	0.00
15 PUPIL TRANSPORTATION EQUIPMENT FUND								
Expenditure Detail	0.00	0.00						
Other Sources/Uses Detail					0.00	0.00		
Fund Reconciliation							0.00	0.00
17 SPECIAL RESERVE FUND FOR OTHER THAN CAPITAL OUTLAY								
Expenditure Detail								
Other Sources/Uses Detail					0.00	0.00		
Fund Reconciliation							0.00	0.00
18 SCHOOL BUS EMISSIONS REDUCTION FUND								
Expenditure Detail	0.00	0.00						
Other Sources/Uses Detail					0.00	0.00		

Description	Direct Costs - Interfund Transfers In 5750	Direct Costs - Interfund Transfers Out 5750	Indirect Costs - Interfund Transfers In 7350	Indirect Costs - Interfund Transfers Out 7350	Interfund Transfers In 8900-8929	Interfund Transfers Out 7600-7629	Due From Other Funds 9310	Due To Other Funds 9610
Fund Reconciliation							0.00	0.00
19 FOUNDATION SPECIAL REVENUE FUND								
Expenditure Detail	0.00	0.00	0.00	0.00				
Other Sources/Uses Detail						0.00		
Fund Reconciliation							0.00	0.00
20 SPECIAL RESERVE FUND FOR POSTEMPLOYMENT BENEFITS								
Expenditure Detail								
Other Sources/Uses Detail					0.00	0.00		
Fund Reconciliation							0.00	0.00
21 BUILDING FUND								
Expenditure Detail	0.00	0.00						
Other Sources/Uses Detail					0.00	0.00		
Fund Reconciliation							0.00	0.00
25 CAPITAL FACILITIES FUND								
Expenditure Detail	0.00	0.00						
Other Sources/Uses Detail					0.00	0.00		
Fund Reconciliation							0.00	0.00
30 STATE SCHOOL BUILDING LEASE/PURCHASE FUND								
Expenditure Detail	0.00	0.00						
Other Sources/Uses Detail					0.00	0.00		
Fund Reconciliation							0.00	0.00
35 COUNTY SCHOOL FACILITIES FUND								
Expenditure Detail	0.00	0.00						
Other Sources/Uses Detail					0.00	0.00		
Fund Reconciliation							0.00	0.00
40 SPECIAL RESERVE FUND FOR CAPITAL OUTLAY PROJECTS								
Expenditure Detail	0.00	0.00						
Other Sources/Uses Detail					0.00	0.00		
Fund Reconciliation							0.00	0.00
49 CAP PROJ FUND FOR BLENDED COMPONENT UNITS								
Expenditure Detail	0.00	0.00						
Other Sources/Uses Detail					0.00	0.00		
Fund Reconciliation							0.00	0.00
51 BOND INTEREST AND REDEMPTION FUND								
Expenditure Detail								
Other Sources/Uses Detail					0.00	0.00		
Fund Reconciliation							0.00	0.00
52 DEBT SVC FUND FOR BLENDED COMPONENT UNITS								
Expenditure Detail								
Other Sources/Uses Detail					0.00	0.00		
Fund Reconciliation							0.00	0.00
53 TAX OVERRIDE FUND								
Expenditure Detail								

Description	Direct Costs - Interfund Transfers In 5750	Direct Costs - Interfund Transfers Out 5750	Indirect Costs - Interfund Transfers In 7350	Indirect Costs - Interfund Transfers Out 7350	Interfund Transfers In 8900-8929	Interfund Transfers Out 7600-7629	Due From Other Funds 9310	Due To Other Funds 9610
Other Sources/Uses Detail					0.00	0.00		
Fund Reconciliation							0.00	0.00
56 DEBT SERVICE FUND								
Expenditure Detail								
Other Sources/Uses Detail					0.00	0.00		
Fund Reconciliation							0.00	0.00
57 FOUNDATION PERMANENT FUND								
Expenditure Detail	0.00	0.00	0.00	0.00				
Other Sources/Uses Detail						0.00		
Fund Reconciliation							0.00	0.00
61 CAFETERIA ENTERPRISE FUND								
Expenditure Detail	0.00	0.00	0.00	0.00				
Other Sources/Uses Detail					0.00	0.00		
Fund Reconciliation							0.00	0.00
62 CHARTER SCHOOLS ENTERPRISE FUND								
Expenditure Detail	0.00	0.00	0.00	0.00				
Other Sources/Uses Detail					0.00	0.00		
Fund Reconciliation							0.00	0.00
63 OTHER ENTERPRISE FUND								
Expenditure Detail	0.00	0.00						
Other Sources/Uses Detail					0.00	0.00		
Fund Reconciliation							0.00	0.00
66 WAREHOUSE REVOLVING FUND								
Expenditure Detail	0.00	0.00						
Other Sources/Uses Detail					0.00	0.00		
Fund Reconciliation							0.00	0.00
67 SELF-INSURANCE FUND								
Expenditure Detail	0.00	0.00						
Other Sources/Uses Detail					2,000,000.00	0.00		
Fund Reconciliation							0.00	0.00
71 RETIREE BENEFIT FUND								
Expenditure Detail								
Other Sources/Uses Detail					0.00			
Fund Reconciliation							0.00	0.00
73 FOUNDATION PRIVATE-PURPOSE TRUST FUND								
Expenditure Detail	0.00	0.00						
Other Sources/Uses Detail					0.00			
Fund Reconciliation							0.00	0.00
76 WARRANT/PASS-THROUGH FUND								
Expenditure Detail								
Other Sources/Uses Detail								
Fund Reconciliation							0.00	0.00
95 STUDENT BODY FUND								
Expenditure Detail								

Burbank Unified
Los Angeles County

Budget, July 1
2025-26 Estimated Actuals
SUMMARY OF INTERFUND ACTIVITIES
FOR ALL FUNDS

19 64337 0000000
Form SIAA
H8B8FABHZR(2026-27)

Description	Direct Costs - Interfund		Indirect Costs - Interfund		Interfund Transfers In 8900-8929	Interfund Transfers Out 7600-7629	Due From Other Funds 9310	Due To Other Funds 9610
	Transfers In 5750	Transfers Out 5750	Transfers In 7350	Transfers Out 7350				
Other Sources/Uses Detail								
Fund Reconciliation							0.00	0.00
TOTALS	9,619.00	(9,619.00)	762,431.00	(762,431.00)	2,000,000.00	2,000,000.00	0.00	0.00

Burbank Unified
Los Angeles County

Budget, July 1
2026-27 Budget Budget, July 1
SUMMARY OF INTERFUND ACTIVITIES
FOR ALL FUNDS

19 64337 0000000
Form SIAB
H8B8FABHZR(2026-27)

Description	Direct Costs - Interfund Transfers In 5750	Transfers Out 5750	Indirect Costs - Interfund Transfers In 7350	Transfers Out 7350	Interfund Transfers In 8900-8929	Interfund Transfers Out 7600-7629	Due From Other Funds 9310	Due To Other Funds 9610
01 GENERAL FUND								
Expenditure Detail	0.00	0.00	0.00	(1,087,763.00)				
Other Sources/Uses Detail					0.00	1,750,000.00		
Fund Reconciliation								
08 STUDENT ACTIVITY SPECIAL REVENUE FUND								
Expenditure Detail	0.00	0.00	0.00	0.00				
Other Sources/Uses Detail					0.00	0.00		
Fund Reconciliation								
09 CHARTER SCHOOLS SPECIAL REVENUE FUND								
Expenditure Detail	0.00	0.00	0.00	0.00				
Other Sources/Uses Detail					0.00	0.00		
Fund Reconciliation								
10 SPECIAL EDUCATION PASS-THROUGH FUND								
Expenditure Detail								
Other Sources/Uses Detail								
Fund Reconciliation								
11 ADULT EDUCATION FUND								
Expenditure Detail	0.00	0.00	517,138.00	0.00				
Other Sources/Uses Detail					0.00	0.00		
Fund Reconciliation								
12 CHILD DEVELOPMENT FUND								
Expenditure Detail	0.00	0.00	308,334.00	0.00				
Other Sources/Uses Detail					0.00	0.00		
Fund Reconciliation								
13 CAFETERIA SPECIAL REVENUE FUND								
Expenditure Detail	0.00	0.00	262,291.00	0.00				
Other Sources/Uses Detail					0.00	0.00		
Fund Reconciliation								
14 DEFERRED MAINTENANCE FUND								
Expenditure Detail	0.00	0.00						
Other Sources/Uses Detail					0.00	0.00		
Fund Reconciliation								
15 PUPIL TRANSPORTATION EQUIPMENT FUND								
Expenditure Detail	0.00	0.00						
Other Sources/Uses Detail					0.00	0.00		
Fund Reconciliation								
17 SPECIAL RESERVE FUND FOR OTHER THAN CAPITAL OUTLAY								
Expenditure Detail								
Other Sources/Uses Detail					0.00	0.00		
Fund Reconciliation								
18 SCHOOL BUS EMISSIONS REDUCTION FUND								
Expenditure Detail	0.00	0.00						
Other Sources/Uses Detail					0.00	0.00		
Fund Reconciliation								

Description	Direct Costs - Interfund Transfers In 5750	Transfers Out 5750	Indirect Costs - Interfund Transfers In 7350	Transfers Out 7350	Interfund Transfers In 8900-8929	Interfund Transfers Out 7600-7629	Due From Other Funds 9310	Due To Other Funds 9610
19 FOUNDATION SPECIAL REVENUE FUND								
Expenditure Detail	0.00	0.00	0.00	0.00				
Other Sources/Uses Detail						0.00		
Fund Reconciliation								
20 SPECIAL RESERVE FUND FOR POSTEMPLOYMENT BENEFITS								
Expenditure Detail								
Other Sources/Uses Detail					0.00	0.00		
Fund Reconciliation								
21 BUILDING FUND								
Expenditure Detail	0.00	0.00						
Other Sources/Uses Detail					0.00	0.00		
Fund Reconciliation								
25 CAPITAL FACILITIES FUND								
Expenditure Detail	0.00	0.00						
Other Sources/Uses Detail					0.00	0.00		
Fund Reconciliation								
30 STATE SCHOOL BUILDING LEASE/PURCHASE FUND								
Expenditure Detail	0.00	0.00						
Other Sources/Uses Detail					0.00	0.00		
Fund Reconciliation								
35 COUNTY SCHOOL FACILITIES FUND								
Expenditure Detail	0.00	0.00						
Other Sources/Uses Detail					0.00	0.00		
Fund Reconciliation								
40 SPECIAL RESERVE FUND FOR CAPITAL OUTLAY PROJECTS								
Expenditure Detail	0.00	0.00						
Other Sources/Uses Detail					0.00	0.00		
Fund Reconciliation								
49 CAP PROJ FUND FOR BLENDED COMPONENT UNITS								
Expenditure Detail	0.00	0.00						
Other Sources/Uses Detail					0.00	0.00		
Fund Reconciliation								
51 BOND INTEREST AND REDEMPTION FUND								
Expenditure Detail								
Other Sources/Uses Detail					0.00	0.00		
Fund Reconciliation								
52 DEBT SVC FUND FOR BLENDED COMPONENT UNITS								
Expenditure Detail								
Other Sources/Uses Detail					0.00	0.00		
Fund Reconciliation								
53 TAX OVERRIDE FUND								
Expenditure Detail								

Description	Direct Costs - Interfund Transfers In 5750	Transfers Out 5750	Indirect Costs - Interfund Transfers In 7350	Transfers Out 7350	Interfund Transfers In 8900-8929	Interfund Transfers Out 7600-7629	Due From Other Funds 9310	Due To Other Funds 9610
Other Sources/Uses Detail					0.00	0.00		
Fund Reconciliation								
56 DEBT SERVICE FUND								
Expenditure Detail								
Other Sources/Uses Detail					0.00	0.00		
Fund Reconciliation								
57 FOUNDATION PERMANENT FUND								
Expenditure Detail	0.00	0.00	0.00	0.00				
Other Sources/Uses Detail						0.00		
Fund Reconciliation								
61 CAFETERIA ENTERPRISE FUND								
Expenditure Detail	0.00	0.00	0.00	0.00				
Other Sources/Uses Detail					0.00	0.00		
Fund Reconciliation								
62 CHARTER SCHOOLS ENTERPRISE FUND								
Expenditure Detail	0.00	0.00	0.00	0.00				
Other Sources/Uses Detail					0.00	0.00		
Fund Reconciliation								
63 OTHER ENTERPRISE FUND								
Expenditure Detail	0.00	0.00						
Other Sources/Uses Detail					0.00	0.00		
Fund Reconciliation								
66 WAREHOUSE REVOLVING FUND								
Expenditure Detail	0.00	0.00						
Other Sources/Uses Detail					0.00	0.00		
Fund Reconciliation								
67 SELF-INSURANCE FUND								
Expenditure Detail	0.00	0.00						
Other Sources/Uses Detail					1,750,000.00	0.00		
Fund Reconciliation								
71 RETIREE BENEFIT FUND								
Expenditure Detail								
Other Sources/Uses Detail					0.00			
Fund Reconciliation								
73 FOUNDATION PRIVATE-PURPOSE TRUST FUND								
Expenditure Detail	0.00	0.00						
Other Sources/Uses Detail					0.00			
Fund Reconciliation								
76 WARRANT/PASS-THROUGH FUND								
Expenditure Detail								
Other Sources/Uses Detail								
Fund Reconciliation								
95 STUDENT BODY FUND								
Expenditure Detail								
Other Sources/Uses Detail								

Description	Direct Costs - Interfund Transfers In 5750	Transfers Out 5750	Indirect Costs - Interfund Transfers In 7350	Transfers Out 7350	Interfund Transfers In 8900-8929	Interfund Transfers Out 7600-7629	Due From Other Funds 9310	Due To Other Funds 9610
Fund Reconciliation								
TOTALS	0.00	0.00	1,087,763.00	(1,087,763.00)	1,750,000.00	1,750,000.00		

Burbank Unified School District
Business Services

REPORT TO THE BOARD

TO:	Members of the Board of Education
FROM:	Jason Hasty, Assistant Superintendent of Business Services
PREPARED BY:	Jason Hasty, Assistant Superintendent of Business Services
SUBMITTED BY:	Terri Ramirez-Adams, Senior Administrative Assistant
DATE:	June 25, 2026
SUBJECT:	Approval of Professional Services Agreement with Ryland Strategic Business Consulting for Payroll and Business Services Support

---

Background:

The District has experienced staffing vacancies and operational challenges within the Business Services Department, particularly in the area of payroll administration. Accurate payroll processing and retirement reporting are critical functions that directly impact employee compensation, regulatory compliance, and the District's financial operations.

To provide additional support and expertise during this transition period, staff recommends entering into a Professional Services Agreement with Ryland Strategic Business Consulting (Ryland SBC), a firm specializing in California school district business and payroll operations. Ryland SBC has identified experienced personnel available to assist the District with payroll processing, retirement reporting corrections, CalSTRS and CalPERS compliance, staff training, documentation of procedures, and related business office functions.

The proposed agreement will provide the District with access to specialized expertise on an as-needed basis while staff continues to evaluate long-term operational needs and staffing solutions.

Discussion/Issues:

Under the proposed agreement, Ryland Strategic Business Consulting will provide professional consulting and payroll support services, which may include:

- Payroll processing and reporting;
- Corrections to retirement payroll processing and reporting;
- Consultation regarding CalSTRS and CalPERS requirements;
- Systems evaluations and operational assessments;
- Documentation of business office procedures;
- Training and support for District staff;
- Coordination with Business Services personnel; and
- Recommendations regarding business office policies and procedures.

The agreement establishes hourly rates of $195 for financial consulting services and $150 for payroll accounting services and travel time. Services will be provided on an as-needed basis and only as authorized by the Assistant Superintendent of Business Services.

The proposed contract term extends through June 30, 2027, and includes a provision allowing either party to terminate the agreement with thirty (30) days written notice. The total cost of services under the agreement shall not exceed $50,000.

Fiscal Impact:

The agreement authorizes expenditures not to exceed $50,000 during the contract term ending June 30, 2027. Funding will be provided from the General Fund and charged to appropriate Business Services operational budgets as services are utilized.

Recommendation:

Jason Hasty, Assistant Superintendent of Business Services, recommends that the Board of Education approve the Professional Services Agreement between Burbank Unified School District and Ryland Strategic Business Consulting for payroll and business services support for the period ending June 30, 2027, not to exceed $50,000 (General Fund), and authorize the Superintendent or designee to execute the agreement pursuant to BUSD-AR 3314, as presented.

Ryland | STRATEGIC BUSINESS CONSULTING

RYLAND STRATEGIC BUSINESS CONSULTING SERVICES CONTRACT

This contract is made by and between STLR Corp, dba RYLAND STRATEGIC BUSINESS CONSULTING (Contractor) and the BURBANK UNIFIED SCHOOL DISTRICT. Contractor will provide financial and business office services (described more specifically below) as needed and directed by District staff. In consideration of the services provided, the BURBANK UNIFIED SCHOOL DISTRICT will pay to Contractor hourly fees of $195 for Financial Consulting services and $150 for payroll accounting services and for travel time. All charges, including expenses, will be approved by the Interim Assistant Superintendent of Business Services of the BURBANK UNIFIED SCHOOL DISTRICT. Expenses are defined as actual, out-of-pocket expenses, such as lodging, meals, telephone charges, express or overnight mail charges, etc. The District will be billed on a monthly basis for fees and expenses, not to exceed $50,000. The term of this contract is through June 30, 2027.

RYLAND SBC will provide general financial planning and business services to BURBANK UNIFIED SCHOOL DISTRICT which may include but are not limited to the following: payroll processing and reporting; corrections to retirement payroll processing and reporting; consulting in the areas of CalSTRS and CalPERS; systems evaluations; documentation of procedures; District staff training; coordination with business office staff; and recommendations for board policy.

It is expressly understood and agreed to by both parties that the Contractor, while carrying out and complying with any of the terms and conditions of this agreement, is a corporation licensed in California and not an employee of the District. This contract may be terminated by either party with 30 days' notice. In the case of early termination, BURBANK UNIFIED SCHOOL DISTRICT will be entitled to completion of all work in progress at its option, and RYLAND STRATEGIC BUSINESS CONSULTING will be entitled to payment in full of all expenses and fees incurred.

AGREED:

_____	s/ C. M. Dominico
Jason Hasty, Interim Assistant Superintendent BURBANK UNIFIED SCHOOL DISTRICT	Cathleen M. Dominico, President RYLAND STRATEGIC BUSINESS CONSULTING
_____	6/22/2026
Date	Date

P. O. Box 162, Loomis, California 95650
Office (916) 652-7165 Fax (916) 652-7168 www.rylandsbc.com

UNADOPTED MINUTES OF THE BOARD OF EDUCATION
BURBANK UNIFIED SCHOOL DISTRICT

June 4, 2026

Burbank City Hall
275 E. Olive Avenue
Burbank, California

MEMBERS PRESENT:
Abby Pontzer Kamkar
Emily Weisberg
Laurette Cano (arrived at 6:08 p.m)
Kelsey Olson
Armond Aghakhanian (arrived during Closed Session)

Also present were Oscar Macias, Interim Superintendent and Jason Hasty, Interim Assistant Superintendent, Business Services.

1) CALL TO ORDER

1.a) NOTICE TO THE PUBLIC

2) REQUESTS TO ADDRESS THE BOARD

2.a) Public Communications on Closed Session Agenda Items (In-Person Only)

2.b) Staff Responses

2.c) Board Members' Responses

3) CLOSED SESSION

3.a) Public Employee Discipline/Dismissal/Release Pursuant to Government Code 54957

3.b) Conference with Legal Counsel - Existing Litigation Pursuant to Government Code §54956.9 (b)(1) and (b)(3)(A) (OF 31,494)

Final Settlement Agreement for Special Education Student 960032802 and 960035252

3.c) Conference with Legal Counsel Anticipated Litigation

Significant Exposure to Litigation Pursuant to Paragraph (2) of Subdivision (d) of Section 54956.9., 2 potential case.

3.d) Action on Student Expulsion (OF 31,495)

The Board of Education will take action in closed session pursuant to Education Code Section 48700.7, 48900(b), 48900(c), and 48900(h) and on the expulsion recommendation by the Administrative Hearing Panel for Student #960045447, as presented.

President Pontzer Kamkar led in the Pledge of Allegiance.

4) RECONVENE IN PUBLIC SESSION/PLEDGE OF ALLEGIANCE/LAND ACKNOWLEDGEMENT

5) REPORTING ON CLOSED SESSION

Nothing to report out from Closed Session.

6) ADJUSTMENTS TO THE AGENDA

Dr. Macias pulled 12i, 13d and13e

President Pontzer Kamkar would like to add another presentation under Presentations and Recognitions

7) ITEMS FOR FUTURE AGENDAS

Vice President Weisberg would like a report back on longevity bonuses and what the protocol and practice is for them.

President Pontzer Kamkar would like to explore a legacy permit for Burbank residents to allow their grandchildren to attend Burbank schools as an addition to the Interdistrict permit process.

8) PRESENTATIONS / RECOGNITIONS

President Pontzer Kamar recognized Dr. Oscar Macias for his amazing work and thanked him for leading the District with integrity.

Clerk Cano also thanked Dr. Macias for his leadership and guidance.

Member Olson stated the community needed him and is grateful for him.

Member Aghakhanian also thanked Dr. Macias for building a strong bridge and holding it together.

8.a) Informational Presentation on Facilities and Bond Program Consulting Services with District Advocates Group, a Division of Urban Futures, Inc.

This item is presented to the Board of Education for informational purposes only. Jason Hasty, Interim Assistant Superintendent of Business Services, will introduce a

representative from District Advocates Group, who will provide an overview of the proposed consulting services agreement for facilities and bond program consulting support, as presented.

DAG Faciliities Bond Presentation 060426.pdf (OF 31,496)

9) REPORTS FROM THE BOARD AND STAFF

9.a) Burbank Teacher's Association (BTA), California School Employees Association (CSEA), Burbank Association of School Administrators (BASA)

Sarah Schwartz; BTA President, Laura Bauman, CSEA President, and BASA President will report on association business.

Sarah Schwartz, President of the BTA, acknowledged the hard work of BUSD staff. Asked for the District to be transparent on how the reorganizations will be funded and how they will be evaluated. Stated the importance that funding cannot be diverted from the classroom.

9.b) Reports from the Superintendent

Oscar Macias, Interim Superintendent, will report on items of interest to the Board of Education and the community.

Dr. Macias thanked the Board for their recognition and will share more at the June 25th Board meeting. Thanked Cabinet leadership and congratulated all the graduates. Dr. Hasty then introduced the new Director of Facilities, Valeska Emes.

Dr. Tom McCoy approached podium and presented the organizational chart for District staffing, effective July 1. He spoke about some goals he has for the District. Mentioned he will implement an evaluation system for management positions. Spoke on salaries and recruitment and ways to identify other income streams.

Board members took turns asking questions for Dr. Tom McCoy.

10) REQUESTS TO ADDRESS THE BOARD

10.a) Public Communications on Agenda Items and on Any Subject Within the Jurisdiction of the School Board

Mark Torosyan, recent graduate from High School, spoke on his school experiences.

James De Armendi, student at Miller Elementary, spoke on issues such as, too many students in each class and the effects on teachers.

Molly De Armendi stated her family is leaving Burbank. Mentioned her concerns about the District’s financial stability and said there are structural changes needed.

Linda Walmsley, community member, spoke on the missing Sobel Report and a report on legal fees.

Andrea Lamb, Burbank Unified employee, spoke on accountability, conflict of interest and code of ethics for Board members.

Teresa Medina, parent of three Burbank Unified students, spoke on accountability in Special Ed department.

Jen Lurie, Burbank Unified employee, volunteer and SBAC committee member, spoke on restoring campus leaders, urged Board to take more time approving the new positions. She also referenced discrepancies in the donor report, 11b.

Anita Schackmann, community member, spoke on the FCMAT report and the fiscal oversight to reduce spending. Urged to restore laid off positions and provide raises.

Alexandra Helfrich, community member, spoke on legal fees and public records requests fees. She requested information on how much was spent on the Sobel investigation.

Jef Vander Borght, community member, watched the presentation from FCMAT from the May 21st, meeting. He mentioned internal controls and the upcoming budget review.

Byron Barnes, Burbank Unified parent and PTA member, thanked Dr. Macias for holding the District together. He addressed the District's afterschool programs, ATB programs and the communication needed.

10.b) Superintendent's Comments

Oscar Macias, Interim Superintendent, will respond to public comment.

Dr. Macias thanked all speakers and all who showed up to voice their concerns. Stated he has taken notes of tonight's comments.

10.c) Board Members' Responses

Board Members will respond to public comment.

President Pontzer Kamkar, thanked all speakers for their feedback.

11) REPORTS TO THE BOARD

11.a) Update on Legal Fees, Fiscal Year 2025-2026

Jason Hasty, Interim Assistant Superintendent of Business Services, will present updated information regarding the Districts Update on Legal Fees for Fiscal Year 2025-2026, as presented.

Update on Legal Fees 2025-26 060426.pdf (OF 31,497)

11.b) Report on Donor Contributions

Jason Hasty, Interim Assistant Superintendent of Business Services, will report to the Board of Education on donor contributions and Districtwide giving, as presented.

Donor Contribution Report 060426.pdf (OF 31,498) PULLED

12) NEW AND/OR UNFINISHED BUSINESS

12.a) Approval of Independent Learning Academy Master Agreements

Peter Knapik, Assistant Superintendent of Educational Services, recommends that the Board of Education approve the Independent Learning Academy Master Agreements for the 2026-2027 school year, effective June 5, 2026, as presented.

26-27 ILA Master Agreement 6 4 26.pdf (OF 31,499)

It was moved by Armond Aghakhanian, and seconded by Kelsey Olson, that the Board of Education approve the item as recommended. The motion carried unanimously.

Meeting went into Recess

Meeting Reconvened

12.b) Approval of 2026-2027 Courses and Instructional Minutes for the Independent Learning Academy

Peter Knapik, Assistant Superintendent, Educational Services, recommends that the Board of Education approve the course list and instructional minutes for the Independent Learning Academy, effective July 1, 2026 through June 30, 2027, as presented.

ILA_Course_Approval__Inst_Minutes_6 4 26.pdf (OF 31,500)

It was moved by Armond Aghakhanian, and seconded by Emily Weisberg, that the Board of Education approve the item as recommended. The motion carried unanimously.

12.c) Amended Approval of Professional Services (Human Resources)

Human Resources Services, recommends that the Board of Education amend the Agreement for Professional Services between the Burbank Unified School District and Linguabee, LLC, to provide American Sign Language interpreting to employees with an increase of $5,000.00 (010-00000.0-00000-72000-5850-7550000), effective August 1, 2025 through June 30, 2026, and that authority to sign the agreement be pursuant to BUSD AR 3314, as presented.

Amended Agreement for Professional Services (Human Resources).pdf (OF 31,501)

It was moved by Armond Aghakhanian, and seconded by Kelsey Olson, that the Board of Education approve the item as recommended. The motion carried unanimously.

12.d) Approval of New Classified Management Position- Public Information Officer (PIO)

Human Resources Services, recommends that the Board of Education approve the establishment of the Public Information Officer (PIO), a Classified Management position on Salary Schedule B, Range B (General Fund), effective June 5, 2026, to strengthen districtwide communication, enhance transparency, support crisis response, and ensure alignment between District initiatives and community engagement, as presented.

Approval of New Classified Management Position- Public Information Officer (PIO).pdf (OF 31,502)

It was moved by Armond Aghakhanian, and seconded by Kelsey Olson, that the Board of Education approve the item as recommended. The motion carried with 4-1 votes.

12.e) Approval of Job Description for Assistant Superintendent of Special Education and Student Support Services

Human Resources Services, recommends that the Board of Education approve the Job Description for Assistant Superintendent of Special Education and Student Support Services, effective June 5, 2026, as presented.

PULLED

Approval of Job Description for Assistant Superintendent of Special Education and Student Support Services.pdf PULLED

12.f) Approval of Employment Contract for Dr. Jason Hasty for the Assistant Superintendent of Business Services

Human Resources Services, recommends that the Board of Education approve the employment contract for the Assistant Superintendent of Business Services, effective July 1, 2026, as presented.

Approval of Employment Contract for Dr. Jason Hasty for the Assistant Superintendent of Business Services.pdf (OF 31,503) AMENDED

It was moved by Armond Aghakhanian, and seconded by Kelsey Olson, that the Board of Education approve the item as recommended. The motion carried unanimously.

12.g) Approval of Employment Contract for Matthew La Belle for the Assistant Superintendent of Human Resources

Human Resources Services, recommends that the Board of Education approve the employment contract for the Assistant Superintendent of Administrative Services, effective July 1, 2026, as presented.

Approval of Employment Contract for Matthew La Belle for the Assistant Superintendent of Human Resources.pdf (OF 31,504) AMENDED

It was moved by Armond Aghakhanian, and seconded by Kelsey Olson, that the Board of Education approve the item as recommended. The motion carried unanimously.

12.h) Approval of Job Description for the Director of Expanded Learning

Human Resources Services recommends that the Board of Education approve the Job Description for the Director of Expanded Learning, effective June 5, 2026, as presented.

Approval of Job Description for Director of Expanded Learning Programs.pdf (OF 31,505)

It was moved by Armond Aghakhanian, and seconded by Kelsey Olson, that the Board of Education approve the item as recommended. The motion carried unanimously.

12.i) Approval of Master Contract Renewal for Nonpublic, Nonsectarian Schools and Agencies

Peter Knapik, Assistant Superintendent of Educational Services, recommends that the Board of Education approve the Master Contracts and service agreements for special education students, to be provided by the indicated nonpublic, nonsectarian schools and agencies as follows: 01.0-65000.0-57601-11800-5810-7440000 = $2,500,000.00 01.0-65460.0-57601-11800-5810-7440000 = $1,200,000.00 01.0-65000.0-57601-11804-5810-7440000 = $7,000,000.00 01.0-33270.0-57601-11800-5810-7440000 = $300,000.00 Effective July 1, 2026 through June 30, 2027, and that authority to sign the contracts be exercised pursuant to BUSD-AR 3314, as presented.

SPED Nonpublic, Nonsectarian Schools and Agencies.pdf PULLED

PULLED

12.j) Approval of Renewal Agreement with Droplet, Inc. for District Workflow Automation, Digital Forms Platform, and Electronic Signature Services for the 2026–2027 Fiscal Year

Business Services recommends that the Board of Education approve the renewal agreement between Burbank Unified School District and Droplet, Inc. to support workflow automation, digital forms implementation, and electronic signature services, effective July 1, 2026, through June 30, 2027, not to exceed $58,000 (01.0-00000.0-00000-72000-5840-7470000, General Fund), and that authority to sign the agreement be exercised pursuant to BUSD AR 3314, as presented.

Droplet renewal and esignature 060426.pdf (OF 31,506)

It was moved by Armond Aghakhanian, and seconded by Kelsey Olson, that the Board of Education approve the item as recommended. The motion carried unanimously.

12.k) Approval of Chromebook purchase through CDW (Bond Funds)

James Avery, Director of Information Technology and Education Support, recommends that the Board of Education approve the purchase of devices as presented in the CDW quote, not to exceed $2,061,891.25, (21.0-00000.0-92000-85000-4450-7730000) Bond Funds, and that authority to sign the agreement be exercised pursuant to BUSD-AR 3314, as presented.

Chromebook purchase 060426.pdf (OF 31,507)

It was moved by Kelsey Olson, and seconded by Laurette Cano, that the Board of Education approve the item as recommended. The motion carried unanimously.

Meeting extended for twenty minutes.

Motion by Member Aghakhanian and seconded by Member Olson. Motion passed unanimously.

13) CONSENT AGENDA

13.a) Approval of Minutes

Minutes 5.21.26 UNOFFICIAL AM.pdf PULLED

13.b) Approval of the 2025-2026 Purchase Order Report

Administrative Services recommends that the Board of Education approve purchase orders for 2025-2026 as listed through May 11, 2026, as presented.

2025-2026 PURCHASE ORDER REPORT.pdf

13.c) Approval of Personnel Report 25-26-21

Human Resources Services, recommends that the Board of Education approve Personnel Report number 25-26-21, covering Certificated and Classified personnel, and consisting of Pages 1 to 8 inclusive, as presented.

Personel Report Number 25-26-21.pdf (OF 31,508)

13.d) Approval of Final Settlement Agreement (Special Education)

Peter Knapik, Assistant Superintendent of Educational Services, recommends that the Board of Education approve Final Settlement Agreement for Special Education student 960035252, total not to exceed $7,250, (01.0-65000.0-50010-36000-5813-7440000), 2025-2026 school year through May 1, 2028 and that authority to sign the agreement be exercised pursuant to BUSD-AR 3314, as presented.

SPED Student 960035252 Settlement Agreement.pdf PULLED

13.e) Approval of Final Settlement Agreement (Special Education)

Peter Knapik, Assistant Superintendent of Educational Services, recommends that the Board of Education approve Final Settlement Agreement for Special Education student 960032802, total not to exceed $15,880, (01.0-65000.0-50010-36000-5813-7440000), 2024-2025 school year through December 31, 2027 and that authority to sign the agreement be exercised pursuant to BUSD-AR 3314, as presented.

SPED Student 960032802 Settlement Agreement.pdf PULLED

13.f) Approval of University Agreement- University of California, Merced

Human Resources Services, recommends that the Board of Education approve the University Agreement between the Burbank Unified School District and the University of California, Merced, to provide educational field experience for student teachers, effective June 5, 2026 through until terminated three (3) years on June 30, 2026, and that authority to sign the agreement be exercised pursuant to BUSD--AR 3314, as presented.

Approval of University Agreement- University of California, Merced.pdf (OF 31,509)

13.g) Approval of Agreement for Professional Services Provided by Kids Physical Therapy, Inc. (Special Education)

Peter Knapik, Assistant Superintendent of Educational Services, recommends that the Board of Education approve an agreement between the Burbank Unified School District and Kids Physical Therapy, Inc., to provide physical therapy services for Burbank Special Education students, not to exceed $184,000 (01.0-65000.0-57602-11900-5850-7440000), effective July 1, 2026 through June 30, 2027, and that authority to sign the agreement be exercised pursuant to BUSD-AR 3314, as presented.

SPED Kids Physical Therapy, Inc..pdf (OF 31,510)

13.h) Approval of Agreement for Professional Services Provided by Karen Lynn Epport, Ph.D. (Special Education)

Peter Knapik, Assistant Superintendent of Educational Services, recommends that the Board of Education approve an agreement between the Burbank Unified School District and Karen Lynn Epport, Ph.D., to provide a speech and language IEE, not to exceed $3,500 (01.0-65000.0-57602-11901-5850-744000) for Special Education student 960033599, effective June 5, 2026 through December 30, 2026, and that authority to sign the agreement be exercised pursuant to BUSD-AR 3314, as presented.

SPED Student 960033599 Karen Epport, Ph.D..pdf (OF 31,511)

13.i) Approval of Agreement for Professional Services Provided by Alpha Interpreting Agency, Corp.

Peter Knapik, Assistant Superintendent of Educational Services, recommends that the Board of Education approve an agreement between Burbank Unified School District and Alpha Interpreting Agency, Corp., to provide interpreters/translators for DHH students, not to exceed $2,000,000 (01.0-65000.0-57602-11900-5850-7440000),

effective July 1, 2026 through June 30, 2027 and that authority to sign the agreement be exercised pursuant to BUSD-AR 3314, as presented.

SPED Professional Services Alpha Interpreting.pdf (OF 31,512)

13.j) Approval of Agreement for Professional Services Provided by Albert J. Melaragno, M.D. (Special Education)

Peter Knapik, Assistant Superintendent of Educational Services, recommends that the Board of Education approve the agreement between the Burbank Unified School District and Albert J. Melaragno, M.D. to provide authorized signatures for occupational therapy medical logs, as authorized by Education Code Section 17596, effective July 1, 2026 through June 30, 2027, not to exceed $2,000 (01.0-05640.0-57500-31400-5880-7448000), and that authority to sign the agreement be exercised pursuant to BUSD AR 3314, as presented.

SPED Professional Services Albert J. Melaragno, M.D..pdf (OF 31,513)

13.k) Approval of Agreement for Professional Services Provided by B.I.G. Solutions, LLC (Special Education)

Peter Knapik, Assistant Superintendent of Educational Services, recommends that the Board of Education approve an agreement between the Burbank Unified School District and B.I.G. Solutions, LLC, to provide a specialized support for Special Education student 960034998, not to exceed $82,800 (01.0-65000.0-57602-11900-5850-7440000), effective September 2, 2026 through May 31, 2027, and that authority to sign the agreement be exercised pursuant to BUSD-AR 3314, as presented.

SPED Student 960034998 B.I.G. Soutions, LLC.pdf (OF 31,514)

13.l) Approval of Agreement for Professional Services Provided by Mind Your Language, Inc. for Special Education Students

Peter Knapik, Assistant Superintendent of Educational Services recommends that the Board of Education approve an agreement between the Burbank Unified School District and Mind Your Language, Inc., to provide interpreting and translation for Burbank students, not to exceed $100,000 (01.0-65000.0-57602-11901-5850-7440000), effective July 1, 2026 through June 30, 2027, and that authority to sign the agreement be exercised pursuant to BUSD-AR 3314, as presented.

SPED Professional Services Mind Your Language.pdf (OF 31,515)

13.m) Approval of Agreement for Professional Services Provided by LRA Interpreters, Inc. (Special Education)

Peter Knapik, Assistant Superintendent of Educational Services, recommends that the Board of Education approve an agreement between the Burbank Unified School District and LRA Interpreters, Inc., to provide interpreting and translation services for Burbank Special Education students, not to exceed $200,000 (01.0-65000.0-57602-11901-5850-7440000), effective July 1, 2026 through June 30, 2027, and that

authority to sign the agreement be exercised pursuant to BUSD-AR 3314, as presented.

SPED Professional Services LRA Interpreters, Inc..pdf PULLED

13.n) Approval of Agreement for Professional Services Provided by Sarah Knauff Speech-Language Pathology, Inc. (Special Education)

Peter Knapik, Assistant Superintendent of Educational Services, recommends that the Board of Education approve an agreement between Burbank Unified School District and Sarah Knauff Speech-Language Pathology, Inc., to provide a Speech-Language Pathologist (SLP), not to exceed $202,450 (01.0-65000.0-57602-11901-5850-7440000), effective July 1, 2026 through June 30, 2027, and that authority to sign the agreement be exercised pursuant to BUSD-AR 3314, as presented.

SPED Professional Services Sarah Knauff Speech-Language Pathology, Inc..pdf (OF 31,516)

13.o) Approval of Agreement for Professional Services Provided by LA City Cab, LLC (Special Education)

Peter Knapik, Assistant Superintendent of Educational Services, recommends that the Board of Education approve an agreement between the Burbank Unified School District and LA City Cab, LLC for transportation services for Special Education students on an as needed basis, effective July 1, 2026, through June 30, 2027, not to exceed $250,000 (01.0-07240.0-50010-36000-5812-7440000), and that authority to sign the agreement be exercised pursuant to BUSD-AR 3314, as presented.

SPED Professional Services LA City Cab, LLC_Transportation.pdf (OF 31,517)

13.p) Approval of Agreement for Professional Services Provided by Linguabee LLC (Special Education)

Peter Knapik, Assistant Superintendent of Educational Services, recommends that the Board of Education approve an agreement between the Burbank Unified School District and Linguabee LLC, to provide interpreting and translation for Burbank students, not to exceed $100,000 (01.0-65000.0-57602-11901-5850-7440000), effective July 1, 2026 through June 30, 2027, and that authority to sign the agreement be exercised pursuant to BUSD-AR 3314, as presented.

SPED Professional Services Linguabee LLC.pdf (OF 31,518)

13.q) Approval of Amended Agreement for Professional Services Provided by First Student, Inc. for Special Education Students

Peter Knapik, Assistant Superintendent of Educational Services, recommends that the Board of Education amend an agreement between the Burbank Unified School District and First Student, Inc., to provide transportation services for Special Education students, for a total not to exceed of $4,425,332.20 (01.0-07240.0-50010-36000-5812-7440000), effective July 1, 2026 through June 30, 2027, and that authority to sign the agreement be exercised pursuant to BUSD-AR 3314, as presented. Note: The original

approval date was August 11, 2025 for a total not to exceed $3,806,332.20. Due to increased need for transportation, this amendment adds an additional $619,000 for a new not to exceed amount of $4,425,332.20.

SPED Professional Services First Student_Transportation_Amendment.pdf (OF 31,519)

13.r) Approval of Instructional Consultant Services

Peter Knapik, Assistant Superintendent of Educational Services, recommends that the Board of Education approve the instructional consultant services for on-site student learning support and staff development and exercise authority to sign the agreements pursuant to BUSD-AR 3314, as presented.

Approval of Instructional Consultants_Redacted 6 4 26.pdf (OF 31,520)

13.s) Approval of Agreement Renewal, Intercom Clock & Signal Service (ICS), District-Wide Cellular Monitoring Services, Various Sites (General Fund)

It is recommended that the Board of Education approve the renewal agreement between Burbank Unified School District and Intercom Clock & Signal Service (ICS) for district-wide cellular fire alarm monitoring services for the period of July 1, 2026, through June 30, 2027, in an amount not to exceed $3,600, charged to General Fund account 01.0-00100.0-00000-83000-5850-752-0000, and authorize execution of the agreement in accordance with BUSD-AR 3314, as presented.

ICS NEW SITES.pdf (OF 31,521)

13.t) Approval of Award of Contract, California Paving & Grading, Patch Existing Playground Asphalt, Thomas Edison Elementary School (Deferred Maintenance)

Business Services recommends that the Board approve the contract award between the Burbank Unified School District and California Paving & Grading for the patching of existing playground asphalt at Thomas Edison Elementary School, not to exceed $24,610 (14.0-00000.0-00000-85000-5810-2020000, Deferred Maintenance), effective June 5, 2026 through June 4, 2027, and that authority to sign the agreement be exercised pursuant to BUSD AR 3314, as presented.

Paving Edison New.pdf (OF 31,522)

13.u) Approval of Award of Contract, California Paving & Grading, Patch Existing Playground Asphalt, William McKinley Elementary School (Deferred Maintenance)

Business Services recommends that the Board approve a contract award between the Burbank Unified School District and California Paving & Grading for the patching of existing playground asphalt at William McKinley Elementary School, not to exceed $24,870 (14.0-00000.0-00000-85000-5810-2090000, Deferred Maintenance), effective June 5, 2026 through June 4, 2027, and that authority to sign the agreement be exercised pursuant to BUSD AR 3314, as presented.

Paving McKinley New.pdf (OF 31,523)

13.v) Ratification of Agreement between Burbank Adult School and Anatomage, Inc.

Peter Knapik, Assistant Superintendent of Educational Services, recommends that the Board of Education ratify the agreement between Burbank Adult School and Anatomage, Inc., effective June 5, 2026, in the amount of $113,474.82 (11.0-63910.0-41104-10000-6410-5330000 = $89,134.82, 11.0-63910.0-41104-10000-5631-5330000 = $21,840.00), as presented.

BAS Anatomage 6 4 26.pdf (OF 31,524)

13.w) Ratification of Agreement for Instructional Consultant Services

Peter Knapik, Assistant Superintendent of Educational Services, recommends that the Board of Education ratify the instructional consultant services for on-site student learning support and staff development and exercise authority to sign the agreements pursuant to BUSD-AR 3314, as presented.

Ratification of Instructional Consultants 6 4 26.pdf (OF 31,525)

13.x) Approval of Additive Change Order No. 1, Massadi Enterprises Inc., Division of State Architect (DSA) Inspections, Aquatic Center Modernization, Burbank High School (Capital Outlay Fund)

Business Services recommends that the Board of Education approve Additive Change Order No.1 to the agreement between Burbank Unified School District and Massadi Enterprises Inc. for Division of the State Architect (DSA) inspection services for the Aquatic Center Modernization project at Burbank High School, increasing the agreement by $8,600 for a revised agreement amount not to exceed $208,600, (40.0-90329.0-00000-85000-6281-4310000, Capital Outlay), and that authority to sign the agreement be exercised pursuant to BUSD AR 3314, as presented.

CO1_MASSADI_BHS_CAPITAL OUTLAY.pdf (OF 31,526)

13.y) Approval of Additive Change Order No. 8, Hart Design Build Inc., Bid 2425-003: Aquatic Center Modernization, Burbank High School (Capital Outlay)

Business Services recommends that the Board approve Additive Change Order No. 8 to the agreement between the Burbank Unified School District and Hart Design Build Inc. for the Aquatic Center Modernization Project at Burbank High School, increasing the agreement by $85,456.27 for a revised contract amount not to exceed $3,699,394.60 , funded by Capital Outlay, and that authority to sign the agreement be exercised pursuant to BUSD AR 3314, as presented.

ADD CO8_Hart_BHS Pool_Capital Outlay.pdf (OF 31,527)

13.z) Approval of Professional Services Agreement, Massadi Enterprises Inc., Division of State Architect (DSA) Inspections, Retrofit of TK Playground Equipment, Ralph Waldo Emerson, Walt Disney, Bret Harte, Thomas Jefferson, William McKinley,

Providencia, George Washington, Theodore Roosevelt and Joaquin Miller Elementary Schools (Developer Fees)

Business Services recommends that the Board approve the professional services agreement between the Burbank Unified School District and Massadi Enterprises Inc. to provide Division of State Architect inspection services for the retrofit of TK playground equipment at various elementary school sites, not to exceed $7,200, (25.0-00000.0-91006-85000-6281-7520000, Developer Fees), and that authority to sign the agreement be exercised pursuant to BUSD AR 3314, as presented.

AOP_MASSADI_Various Sites_playground_growth.pdf (OF 31,528)

13.aa) Approval of Notice of Completion, Sierra School Equipment Co., Furnish and Install New Crusader Chairs, Auditorium, Roosevelt Elementary (Gift Fund/Restricted Routine Maintenance)

Business Services recommends that the Board of Education approve the Notice of Completion for Sierra School Equipment Co. for the furnishing and installation of new Crusader chairs at Roosevelt Elementary School auditorium, and accept the project as complete.

NOC_Sierra Equipment_Roosevelt_Gift.pdf (OF 31,529)

13.ab) Approval of Purchase of Network Patch cables (Bond Funds)

James Avery, Director of Information Technology and Education Support, recommends that the Board of Education approve the purchase Network patch cables in an amount not to exceed $40,000.00, (21.0-00000.0-92000-85000-4450-7730000) Bond Funds, and that authority to sign the agreement be exercised pursuant to BUSD-AR 3314, as presented.

Network patch cables 060426.pdf (OF 31,530)

Initial vote for Consent Agenda was: 13c, 13f-13h, 13j, 13k, 13s-13ab

Motion to approve 13b by Vice President Weisberg, seconded by Member Aghakhanian. Motion passed unanimously.

Motion to approve 13l and 13p by Member Aghakhanian, seconded by Member Olson. Motion passed unanimously.

Motion to approve 13n, 13o, 13q and 13r by Vice President Weisberg, seconded Member Aghakhanian. Motion passed unanimously.

It was moved by Emily Weisberg, and seconded by Laurette Cano, that the Board of Education approve the item as recommended. The motion carried unanimously.

14) REPORTS FROM BOARD MEMBERS

14.a) Reports from Board Members

Board of Education members will report on items within the jurisdiction of the Board.

Member Olson mentioned annual report piece was very helpful.

Clerk Cano gave a shout out to all the Burbank Adult School graduates.

President Pontzer Kamkar read the retirees.

15) ADJOURNMENT

Meeting adjourned at 10:53 p.m.

MINUTES APPROVED:

_____
OSCAR MACIAS, INTERIM SUPERINTENDENT
SECRETARY OF THE BOARD

6/25/2026
_____
DATE

_____
LAURETTE CANO, CLERK

UNADOPTED MINUTES OF THE BOARD OF EDUCATION
BURBANK UNIFIED SCHOOL DISTRICT

May 7, 2026

Burbank City Hall
275 E. Olive Avenue
Burbank, California

MEMBERS PRESENT:
Abby Pontzer Kamkar
Emily Weisberg
Laurette Cano
Kelsey Olson
Armond Aghakhanian (arrived 5:03 p.m.)

Also present were Peter Knapik, Assistant Superintendent, Educational Services and Jason Hasty, Interim Assistant Superintendent, Business Services.

1) CALL TO ORDER

1.a) NOTICE TO THE PUBLIC

2) REQUESTS TO ADDRESS THE BOARD

2.a) Public Communications on Closed Session Agenda Items (In-Person Only)

Nolan Sutherland, parent and Burbank resident, spoke regarding Board item 3a. He is concerned about the memo from BTA regarding immigrants. Wants the Board to clarify where they stand.

Alexis Weiner, spoke regarding agenda item 3a. She spoke on immigration status. She spoke in favor of a collaboration with BTA for a safe schools MOU and support for employees. Asked the Board to reconsider.

Amy Fuhr, BUSD Teacher, spoke on final exams and that assessments take a lot of time. Middle School teachers are not allotted for any professional time like High School teachers do. She would like that to be brought back during negotiations.

2.b) Staff Responses

Dr. Peter Knapik thanked all the speakers and will bring back a counter proposal during negotiations.

2.c) Board Members' Responses

Vice President Weisberg requested consistent updates from negotiations.

Member Aghakhanian shared he is proud of the working relationships of teachers and spoke in support of them.

3) CLOSED SESSION

3.a) Conference with Labor Negotiator, Pursuant to Government Code 54957.6

Agency Negotiator: Jason Hasty Employee Organizations: Burbank Teachers Association (BTA) & California School Employees Association (CSEA)

3.b) Public Employee Discipline/Dismissal/Release Pursuant to Government Code 54957 (OF 31,405)

3.c) Conference with Legal Counsel - Existing Litigation Pursuant to Government Code §54956.9 (b)(1) and (b)(3)(A) (OF 31,406)

Final Settlement Agreement for Special Education Students 960025725 and 960046052

4) RECONVENE IN PUBLIC SESSION/PLEDGE OF ALLEGIANCE/LAND ACKNOWLEDGEMENT

President Pontzer Kamkar and Board Members take a moment of silence in memory of Arti Varma.

President Pontzer Kamkar led in the Pledge of Allegiance.

5) REPORTING ON CLOSED SESSION

Skelly

President Pontzer Kamkar reported on item 3b. They adopted the Resolution of the ~~skully~~ hearing officer. Motion from Vice President Weisberg and seconded by Member Olson. Passed 5-0.

In Closed Session, Board took action to give Permanent Certificated employee CT-18925, a notice of termination. AYES: Aghakhanian, Cano, Olson, Weisberg and Pontzer Kamkar.

No other business to report from Closed Session.

6) ADJUSTMENTS TO THE AGENDA

Dr. Weisberg suggested moving up the Resolutions to Presentations and vote when they get to New and/or Unfinished Business. She asked to check the Brown Act for protocols.

Member Olson would like to pull 12i and asked to bring it back to the next meeting.

Pulling 13c and 13t.

7) ITEMS FOR FUTURE AGENDAS

Dr. Weisberg would like to get information back on when they can expect some of the reports they have requested.

Dr. Aghakhanian would like information on the Donors to acknowledge them.

Dr. Jason Hasty stated they will have the Donor report at the end of the year.

8) PRESENTATIONS / RECOGNITIONS

Kirsten Morris approached podium to give presentation on the PTA.

Julie Markussen, Director of Secondary Education, approached podium to present the Resolutions.

9) REPORTS FROM THE BOARD AND STAFF

9.a) Student Representatives

Natalie Garibyan, Burbank High School; Haily Hoang, John Burroughs High School; and Hayk Smbatyan, Monterey High School, will report on activities at their respective schools.

Hayk Smbatyan, Monterey High School, was absent.

9.b) Burbank Teacher's Association (BTA), California School Employees Association (CSEA), Burbank Association of School Administrators (BASA)

Sarah Schwartz; BTA President, Laura Bauman, CSEA President, and Laura Flosi, BASA President will report on association business.

Sarah Schwartz, BTA President and BUSD teacher, began by celebrating the FACT students for their hard work along with their teachers. Encouraged the Board to support the program. She spoke on protection for the immigrant community and asked the Board to support the BTA proposals. Lastly, she spoke on the State budget for school funding.

9.c) Reports from the Superintendent

Dr Knapik, Assistant Superintendent of Educational Services, addressed the Board on behalf of Dr. Macias. He thanked the student representatives for all their hard work. He also thanked the PTA Partners for their support. He shared some thoughts of gratitude from Dr. Macias on current events.

Dr. Knapik introduced Principal Luci Bowers from Bret Harte, who spoke in remembrance of Arti Varma.

President Pontzer Kamkar gave a quick report to the Board. Stated that they do not have the Sobel report and are in contact with Council. The report is being worked on. She spoke on the Board's acknowledgment of Dr. Paramo's retirement concerns and stated a more formal response will follow.

10) REQUESTS TO ADDRESS THE BOARD

10.a) Public Communications on Agenda Items and on Any Subject Within the Jurisdiction of the School Board

Sasha Shahverdian, senior at Burbank High School, spoke on his ineligibility to participate in the Promotion ceremony. His father suffered a serious medical emergency, and in needing to stay by his Father's side, he exceeded the absence limit. Walking at Graduation means a lot to him and his family and would like his situation to be reconsidered and he has made a strong effort to improve attendance.

Jef Vander Borght, addressed Dr. Weisberg regarding the addition to the minutes. Looking forward to the Sobel Report regarding Tabet's daughter.

Sheryl Sacchitelli, BUSD parent, is representing parents who would like change on how Chromebooks are used. She shared her positive meeting with Dr. Anders and are on the same page on the issue and changes for upcoming school year.

Alvaro Valdez, Burbank resident and former BUSD Employee, spoke regarding his encounter with Hector Garcia in the Student Services department. He met due to an error in dis-enrollment of children from District. States that Hector was unsympathetic. He emphasized the importance of customer service. He thanked Briana for her help with the matter and fixing the issue.

Taylor Foxhall (submitted a card later then came and pulled his card), from FSA, thanked Dr. Knapik for the help and his kind words. Stated he will be on High School campuses during the next couple of weeks to talk about mental health awareness.

Eric Hawk, President of the Burbank Community Band, spoke regarding the annual Spring concert last month at the main stage at Huerta Middle School. He thanked District personnel for their support. Mentioned there will be a final performance on May 25, for a Memorial Day ceremony.

Alexandra Helfrich, community member, spoke regarding item 13b. She shared that minutes can't be altered and legally cannot make official action and not record it. She would like the full discussion in minutes.

Janet Diel, community member, shared her concerns about what is being shared and taught at the schools. She spoke on Jewish Culture month and shared her film "Never Again", possibly to show students. She thanked the Family Service Agency for their support.

Tom Huber, BUSD parent and Burbank resident, thanked all teachers and Board members for all they do. He spoke about the importance of after school child care programs. He stated most families rely on after school care.

10.b) Superintendent's Comments

Dr. Knapik thanked all speakers. He will follow up with Dr. Macias regarding all concerns brought to the meeting.

10.c) Board Members' Responses

Board Members will respond to public comment.

President Pontzer Kamkar thanked all speakers for coming. Addressed after school child care issues and mentioned there will be an audit of the programs.

Dr. Aghakhanian acknowledged the FSA and Boys and Girls club programs. Thanked them for all they do for the community.

Dr. Weisberg shared her understanding of the importance of after school child care. She shared that minutes are summaries and encouraged community members to reach out and ask questions.

Clerk Cano mentioned she would like to reach out to the student who reached State level for reflections to possibly have their artwork displayed.

Member Olson thanked all speakers for coming.

11) REPORTS TO THE BOARD

11.a) Measure ABC Bond Program Update

Jason Hasty, Interim Assistant Superintendent of Business Services, will present the Measure ABC Bond Program Update to the Board of Education, as presented.

Measure ABC Bond Program Update 050726.pdf (OF 31,407)

12) NEW AND/OR UNFINISHED BUSINESS

12.a) Adoption of Resolution 41 Proclaiming the May as the Burbank Unified School Districts Asian American and Pacific Islander Heritage Month

Peter Knapik, Assistant Superintendent of Educational Services, recommends that the Board of Education adopt Resolution 41 Proclaiming May 2026 as the Burbank Unified School District Asian American and Pacific Islander Heritage Month, as presented.

Resolution 41 Asian American Heritage Month 5 7 26.pdf AMENDED (OF 31,408)

It was moved by Armond Aghakhanian, and seconded by Kelsey Olson, that the Board of Education approve the item as recommended. The motion carried unanimously.

12.b) Adoption of Resolution 42 - Proclaiming May 2026 as the Burbank Unified School District's Jewish American Heritage Month

Peter Knapik, Assistant Superintendent of Educational Services, recommends that the Board of Education adopt Resolution 42 -proclaiming May 2026 as the Burbank Unified School District's Jewish American Heritage Month, as presented.

Resolution 42 Jewish American Heritage Month 5 7 26.pdf (OF 31,409)

It was moved by Armond Aghakhanian, and seconded by Emily Weisberg, that the Board of Education approve the item as recommended. The motion carried unanimously.

12.c) Adoption of Resolution 43 in Support of Pride Month, June, 2026

Peter Knapik, Assistant Superintendent of Educational Services, recommends that the Board of Education adopt Resolution 43 in Support of Pride Month, June, 2026, as presented.

Resolution_43_Pride Month 5 7 26.pdf AMENDED (OF 31,410)

It was moved by Emily Weisberg, and seconded by Laurette Cano, that the Board of Education approve the item as recommended. The motion carried unanimously.

12.d) Adoption of Resolution 44 Proclaiming the May as the Burbank Unified School Districts Mental Health Awareness Month

Peter Knapik, Assistant Superintendent of Educational Services, recommends that the Board of Education adopt Resolution 44 Proclaiming May 2026 as the Burbank Unified School District Mental Health Awareness Month, as presented.

Resolution 44 Mental Health Awareness Month 5 7 26.pdf (OF 31,411)

It was moved by Armond Aghakhanian, and seconded by Kelsey Olson, that the Board of Education approve the item as recommended. The motion carried unanimously.

12.e) Adoption of Resolution 45 Proclaiming May 18, 2026 as Speech-Language Pathologist Day

Peter Knapik, Ed.D., Assistant Superintendent of Educational Services, recommends that the Board of Education adopt Resolution 45 proclaiming May 18, 2026 as Speech-Language Pathologist Day, as presented.

SPED Adoption of Resolution 45 Speech-Language Pathologist Day.pdf (OF 31,412)

It was moved by Armond Aghakhanian, and seconded by Emily Weisberg, that the Board of Education approve the item as recommended. The motion carried unanimously.

12.f) First Reading of Revised Board Policy and Administrative Regulations

Peter Knapik, Assistant Superintendent of Educational Services, will facilitate the Board s first reading of the proposed revision to Board Policies and Administrative Regulations, as presented.

First Reading Board Policies and Administrative Regulations Related to Discipline.pdf (OF 31,413)

12.g) Approval of Agreement with Houghton Mifflin Harcourt for English 3D with Writable Curriculum from July 1, 2026 through June 30, 2027

Peter Knapik, Assistant Superintendent of Educational Services, recommends that the Board of Education approve the Agreement between the Burbank Unified School District and Houghton Mifflin Harcourt for English 3D with Writable paid by Title III, English Learner funding, not to exceed $24,102.73, under various object codes (01.0-42030.1-0-47600-10000-XXXX-4310000), effective July 1, 2026 through June 30, 2027, and that authority to sign this agreement be exercised pursuant to BUSD AR 3314, as presented.

Approval of Agreement with HMH for English 3D (002).pdf (OF 31,414)

It was moved by Armond Aghakhanian, and seconded by Kelsey Olson, that the Board of Education approve the item as recommended. The motion carried unanimously.

12.h) Approval of Agreement with Right at School for Child Care Paid by Expanded Learning Opportunities Program from July 1, 2026 through June 30, 2027

Peter Knapik, Assistant Superintendent of Educational Services, recommends that the Board of Education approve the Agreement between the Burbank Unified School District and Right at School to for childcare services of eligible families/students and a percentage of administrative costs based on ELOP-eligible students paid by the Expanded Learning Opportunities Program (ELOP), not to exceed $1,000,000 (01.0-2600.0-0-00000-27000-5810-7429000), effective July 1, 2026 through June 30, 2027, and that authority to sign this agreement be exercised pursuant to BUSD AR 3314, as presented.

Agreement with Right at School 5.7.pdf (OF 31,415)

It was moved by Kelsey Olson, and seconded by Emily Weisberg, that the Board of Education approve the item as recommended. The motion carried with 3-2 votes.

12.i) Approval of 2025-2026 Expanded Learning Opportunities Program Plan

Peter Knapik, Assistant Superintendent of Educational Services, recommends that the Board of Education approve the Expanded Learning Opportunities Program Plan effective July 1, 2025, through June 30, 2026, and that authority to sign this agreement be exercised pursuant to BUSD AR 3314, as presented.

Approval of ELOP Plan 2025-2026.pdf PULLED

Pulled

12.j) Approval of Contract with Engaging Hearts & Minds for Summer School Expanded Learning Opportunities Program(ELOP)

Peter Knapik, Assistant Superintendent of Educational Services, recommends that the Board of Education approve the agreement with Engaging Hearts & Minds for the Summer School Expanded Learning Opportunities Program (ELOP) curriculum and services, for a total amount not to exceed $33,680 (01.0-26000.0-11100-10000-4250-548-0000), effective May 1, 2026 through August 30, 2026, and that authority to sign the agreement be exercised pursuant to BUSD-AR 3314, as presented. Here is a link for more information on this organization: https://www.engagingheartsandminds.org/about

Agreement with Engaging Hearts and Minds-Summer School 2026.pdf (OF 31,416)

It was moved by Armond Aghakhanian, and seconded by Laurette Cano, that the Board of Education approve the item as recommended. The motion carried unanimously.

12.k) Approval of Agreement with Family Service Agency of Burbank to Provide School-Based Counseling Services in 2026-2027

Peter Knapik, Assistant Superintendent of Educational Services, recommends that the Board of Education approve the agreement between the Burbank Unified School District and the Family Service Agency of Burbank, to provide individual and group counseling to elementary and secondary school pupils, as required, effective July 1, 2026 through June 30, 2027, not to exceed $142,000 (010-01500.0-71500-31100-5810-7422000) LCAP supplemental funds, and that the authority to sign the agreement be exercised pursuant to BUSD -AR 3314, as presented.

FSA SBC 5 7 26.pdf PULLED

Pulled

Member Olson motioned to extend meeting to 11:15 p.m. Clerk Cano seconded.
Motion passed unanimously.

12.l) Approval of Agreement for Professional Services Provided by Family Services Agency of Burbank for Special Education Students

Peter Knapik, Assistant Superintendent of Educational Services, recommends that the Board of Education approve the agreement between the Burbank Unified School District and the Family Services Agency of Burbank to provide IEP-based mental health services for qualifying Special Education students, effective July 1, 2026 through June 30, 2027, not to exceed $530,000 (01.0-65460.0-57601-11800-581440000), and the authority to sign the contract be exercised pursuant to BUSD-AR 3314, as presented.

FSA SPED 5 7 26.pdf (OF 31,417)

It was moved by Armond Aghakhanian, and seconded by Laurette Cano, that the Board of Education approve the item as recommended. The motion carried unanimously.

12.m) Adoption of Resolution 46 Implementing Certificated Layoffs

Human Resources Services, recommends that the Board of Education adopt Resolution 46 Implementing Certificated Layoffs, as presented.

Adoption of Resolution 46 Implementing Certificated Layoffs.pdf AMENDED (OF 31,418)

It was moved by Armond Aghakhanian, and seconded by Kelsey Olson, that the Board of Education approve the item as recommended. The motion carried unanimously.

12.n) Adoption of Resolution 47 Implementing Classified Layoffs

Human Resources Services, recommends that the Board of Education adopt Resolution 47 Implementing Classified Layoffs, as presented.

Adoption of Resolution 47 Implementing Classified Layoffs.pdf (OF 31,419)

It was moved by Armond Aghakhanian, and seconded by Kelsey Olson, that the Board of Education approve the item as recommended. The motion carried unanimously.

12.o) Approval of Resolution 48 Declaring Salaries Indefinite and to Authorize Regular and Retroactive Pay Changes for the 2026-2027 School Year

Human Resources Services, recommends that the Board of Education approve Resolution 48 Declaring Salaries Indefinite and to Authorize Regular and Retroactive Pay Changes for the 2026-2027 School Year, as presented,

Adoption of Resolution 48 Declaring Salaries Indefinite and to Authorize Regular and Retroactive Changes in Pay for the 2026-2027 School Year.pdf (OF 31,420)

It was moved by Armond Aghakhanian, and seconded by Kelsey Olson, that the Board of Education approve the item as recommended. The motion carried unanimously.

12.p) Approval of Revised Job Description for Director of Arts and Career Technical Education (CTE) on Certificated Supervisors and Managers Salary Schedule A, Range A

Human Resources Services, recommend that the Board of Education approve the Revised Job Description for Director of Arts and Career Technical Education (CTE) on Certificated Supervisors and Managers Salary Schedule A, Range A, effective May 8, 2026, as presented.

Approval of Revised Job Description for Director of Arts and Career Technical Education (CTE) on Certificated Supervisors and Managers Salary Schedule A, Range A.pdf (OF 31,421)

It was moved by Armond Aghakhanian, and seconded by Kelsey Olson, that the Board of Education approve the item as recommended. The motion carried unanimously.

12.q) Approval of Lease Agreement Circle II / Wells Fargo Vendor Financial Services, LLC

Administrative Services recommends that the Board of Education approve the financial agreement between Burbank Unified School District and Wells Fargo Vendor Financial Services, LLC to acquire copiers and printers under a 60-month fair market

value lease, effective July 1, 2026 through June 30, 2031, not to exceed $1,300,000.00 (01.0-00000.0-00000-72000-5611-0000000) and that the authority to sign the agreement be exercised pursuant to BUSD-AR 3314, as presented.

M&S Technology Group Lease 050726.pdf (OF 31,422)

It was moved by Armond Aghakhanian, and seconded by Kelsey Olson, that the Board of Education approve the item as recommended. The motion carried unanimously.

12.r) Approval of Maintenance Agreement with Circle MSP

Administrative Services recommends that the Board of Education approve an agreement between Burbank Unified School District and Circle MSP to provide service and maintenance for copiers and printers for 60 months, effective July 1, 2026 through June 30, 2031, not to exceed $650,000.00 (01.0-00000.0-00000-72000-5631-0000000) and that the authority to sign the agreement be exercised pursuant to BUSD-AR 3314, as presented.

Circle MSP Maintenance Agreement 050726.pdf (OF 31,423)

It was moved by Kelsey Olson, and seconded by Armond Aghakhanian, that the Board of Education approve the item as recommended. The motion carried unanimously.

12.s) Approval of Purchase, Rush Trucks (Cafeteria Fund Fund 13)

Administrative Services, recommends that the Board of Education approve the agreement between Burbank Unified School District and Rush Trucking to provide its product May 9, 2026. (13.0-53100.0-00000-37000-4410-7490000), and that authority to sign the contract pursuant to BUSD AR 3314, as presented.

Rush Trucks 050726.pdf (OF 31,424)

It was moved by Laurette Cano, and seconded by Armond Aghakhanian, that the Board of Education approve the item as recommended. The motion carried unanimously.

12.t) Approval of the 2026-2027 Regular Board of Education Meeting Dates and Amendment to Bylaws 9320:Meetings and Notices

Oscar Macias, Interim Superintendent, recommends that the Board of Education approve its regular meeting dates for the 2026-2027 school year and amend Bylaw 9320:Meeting and Notices, as presented.

Approval of 2026-2027 Regular BOE Meeting 050726.pdf AMENDED (OF 31,425)

It was moved by Emily Weisberg, and seconded by Armond Aghakhanian, that the Board of Education approve the item as recommended. The motion carried unanimously.

13) CONSENT AGENDA

13.a) Approval of Minutes

Minutes 4.9.26 UNOFFICIAL AM.pdf PULLED

13.b) Approval of Minutes

Minutes 4.16.26 UNOFFICIAL AM.pdf (OF 31,426)

13.c) Approval of the 2025-2026 Purchase Order Report

Administrative Services recommends that the Board of Education approve purchase orders for 2025-2026 as listed through April 13, 2026, as presented.

2025-2026 PURCHASE ORDER REPORT.pdf PULLED

13.d) Approval of Personnel Report Number 25-26-19

Human Resources Services, recommends that the Board of Education approve Personnel Report Number 25-26-19, covering Certificated and Classified personnel, and consisting of Pages 1 to 7 inclusive, as presented.

Personnel Report 25-26-19.pdf (OF 31,427)

13.e) Approval to Amend Agreement with Childcare Careers LLC and The Education Team

Peter Knapik, Assistant Superintendent of Educational Services, recommends that the Board of Education agree to provide additional funding for Child Care Careers (CCC) to provide substitutes for child care centers for the remainder of the 2025-2026 school year not to exceed $300,000 (120-90602-0-11100-10000-5850- 754-000-00) and that authority to sign the agreement be exercised pursuant to BUSD-AR 3314, as presented.

Board Report May 7th 2026.pdf (OF 31,428)

13.f) Approval of Instructional Consultant Services

Peter Knapik, Assistant Superintendent of Educational Services, recommends that the Board of Education approve the instructional consultant services for on-site student learning support and staff development and exercise authority to sign the agreements pursuant to BUSD-AR 3314, as presented.

Approval of Instructional Consultants redacted 5 7 26.pdf (OF 31,429)

13.g) Ratification of Agreement for Instructional Consultant Services

Peter Knapik, Assistant Superintendent of Educational Services, recommends that the Board of Education ratify the instructional consultant services for on-site student learning support and staff development and exercise authority to sign the agreements pursuant to BUSD-AR 3314, as presented.

Ratification of Instructional Consultants 5 7 26.pdf (OF 31,430)

13.h) Approval of University Agreement- San Jose University

Human Resources Services, recommends that the Board of Education approve the University Agreement between the Burbank Unified School District and San Jose University, to provide educational field experience for Speech Language Pathologists effective May 8, 2026 through until terminated five (5) years on May 8, 2031, and that authority to sign the Agreement be exercised pursuant to BUSD--AR 3314, as presented.

Approval of University Agreement- San Jose University.pdf (OF 31,431)

13.i) Approval of Agreement between Burbank Adult School and Evolo AI

Peter Knapik, Assistant Superintendent of Educational Services, recommends that the Board of Education approve the Burbank Unified School District/Burbank Adult School and Evolo AI agreement, not to exceed $ 15,000.00 (11.0-63910.0-41102-10000-5840-5330000) - $3,750 (11.0-63910.0-41104-10000-5840-5330000) - $7,500, (11.0-63910.0-41106-10000-5840-5330000), as presented.

BAS EVOLO AI 5 7 26.pdf (OF 31,432)

13.j) Approval of Agreement between Burbank Adult School and Edmentum Learning Software for the 2026-2027 CTE program

Peter Knapik, Assistant Superintendent of Educational Services, recommends that the Board of Education approve the agreement between Burbank Adult School and Edmentum, not to exceed $19,914.00 (11.0-63910.0-41104-10000-5840-5330000) and the authority to sign the Agreement be exercised pursuant to BUSD – AR 3314 as presented.

BAS - Edmentum Agreement-CTE - 2026-2027 5 7 26.pdf (OF 31,433)

13.k) Approval of Agreement for Professional Services Provided by Hathaway-Sycamores Child and Family Services for Special Education

Peter Knapik, Assistant Superintendent of Educational Services recommends that the Board of Education approve an agreement between the Burbank Unified School District and Hathaway Sycamores, to provide Educationally Related Mental Health services for Special Education students at Magnolia Park School, not to exceed $236,453.44 (1.0-33270.0-57601-11800-5810-7440000 = $198,620.88 and 01.0-65460.0-57601-1180-5810-7440000 = $37,832.56). Effective July 1, 2026 through June 30, 2027, and that authority to sign the agreement be exercised pursuant to BUSD-AR 3314, as presented.

SPED Professional Services Hathaway-Sycamores_Mag Park.pdf (OF 31,434)

13.l) Approval of Agreement for Professional Services Provided by Hathaway-Sycamores Child and Family Services for Special Education

Peter Knapik, Assistant Superintendent of Educational Services recommends that the Board of Education approve an agreement between the Burbank Unified School District and Hathaway Sycamores, to provide Educationally Related Mental Health services for Special Education students at Magnolia Park School, not to exceed $489,778.39 (01.0-65460.0-57601-1180-5810-7440000) Effective July 1, 2026 through June 30, 2027, and that authority to sign the agreement be exercised pursuant to BUSD-AR 3314, as presented.

SPED Professional Services Hathaway-Sycamores_SELPA Program.pdf (OF 31,435)

13.m) Approval of Amended Agreement for Professional Services Provided by Sarah Knauff Speech-Language Pathology, Inc. for Special Education

Peter Knapik, Assistant Superintendent of Educational Services, recommends that the Board of Education amend an agreement between Burbank Unified School District and Sarah Knauff Speech-Language Pathology, Inc., to provide a Speech-Language Pathologist (SLP), not to exceed $212,450 (01.0-65000.0-57602-11901-5850-7440000), effective July 1, 2025 through June 30, 2026, and that authority to sign the agreement be exercised pursuant to BUSD-AR 3314, as presented. Note: The original approval date was June 18, 2025 for a total not to exceed $202,450. Due to an increase in student need, this amendment adds an additional $10,000 to the agreement for a new not to exceed total of $212,450.

SPED Professional Services Sarah Knauff_Amendment.pdf (OF 31,436)

13.n) Approval of Amended Agreement for Professional Services Provided by LRA Interpreters, Inc. for Special Education

Peter Knapik, Assistant Superintendent of Educational Services, recommends that the Board of Education amend an agreement between the Burbank Unified School District and LRA Interpreters, Inc., to provide interpreting and translation services for Burbank Special Education students, not to exceed $250,000 (01.0-65000.0-57602-11901-5850-7440000), effective July 1, 2025 through June 30, 2026, and that authority to sign the agreement be exercised pursuant to BUSD-AR 3314, as presented. Note: The original approval date was June 18, 2025 for a total not to exceed $200,000. Due to increased need of interpreting and translation, this amendment adds an additional $50,000 for a new not to exceed amount of $250,000.

SPED Professional Services LRA Interpreters_Amendment.pdf (OF 31,437)

13.o) Approval of Agreement for Professional Services Provided by Adams Silva and McNally LLP for Special Education

Peter Knapik, Assistant Superintendent of Educational Services, recommends that the Board of Education approve an agreement between Burbank Unified School District and Adams Silva & McNally LLP, to perform specific services, not to exceed $400,000 (01.0-65000.0-50010-21000-5820-7440000), effective July 1, 2026 through

June 30, 2027 and that authority to sign the agreement be exercised pursuant to BUSD-AR 3314, as presented.

SPED Professional Services Adams Silva and McNally.pdf (OF 31,438)

13.p) Approval of Agreement for Professional Services Provided by Gary D Stromberg & Associated, LLC for Special Education

Peter Knapik, Assistant Superintendent of Educational Services, recommends that the Board of Education approve an agreement between Burbank Unified School District and Gary D Stromberg & Associates, LLC, to provide a Certified Occupational Therapist Assistant (COTA), not to exceed $114,975 (01.0-65000.0-57602-11901-5850-7440000), effective July 1, 2026 through June 30, 2027, and that authority to sign the agreement be exercised pursuant to BUSD-AR 3314, as presented.

SPED Professional Services Gary D Stromberg_COTA.pdf (OF 31,439)

13.q) Approval of Final Settlement Agreement (Special Education)

Peter Knapik, Assistant Superintendent of Educational Services, recommends that the Board of Education approve Final Settlement Agreement for Special Education student 960025725, total not to exceed $29,000, (01.0-65000.0-50010-36000-5813-7440000), August 13, 2025 through July 31, 2026 and that authority to sign the agreement be exercised pursuant to BUSD-AR 3314, as presented.

SPED Student 960025725 Settlement Agreement.pdf (OF 31,440)

13.r) Approval of Final Settlement Agreement (Special Education)

Peter Knapik, Assistant Superintendent of Educational Services, recommends that the Board of Education approve Final Settlement Agreement for Special Education student 960046052, total not to exceed $4,000, (01.0-65000.0-50010-36000-5813-7440000), April 8, 2026 through May 27, 2027 and that authority to sign the agreement be exercised pursuant to BUSD-AR 3314, as presented.

SPED Student 960046052 Settlement Agreement.pdf (OF 31,441)

13.s) Approval of Award of Contract, Playpower LT Farmington Inc., Furnish and Install Retrofit of TK Playground Equipment, Ralph Waldo Emerson, Walt Disney, Bret Harte, Thomas Jefferson, William McKinley, Providencia, George Washington, Theodore Roosevelt Elementary Schools (Growth Funds)

The Administrative Services Department recommends that the Board of Education approve the contract between Burbank Unified School District and PlayPower LT Farmington Inc., for the Furnish and Install Retrofit of the TK Playground Equipment at the schools below, effective May 8, 2026 through May 7, 2027, not to exceed $152,315.01, Growth Funds, and that authority to sign the agreement be exercised pursuant to BUSD-AR 3314, as presented, as follows: Ralph Waldo Emerson, $9,314.04 (25.0-00000-91006-85000-6170-2030000) Walt Disney, $17,416.58 (25.0-00000-91006-85000-6170-2010000) Bret Harte, $29,976.06 (25.0-00000-91006-

85000-6170-2050000) Thomas Jefferson, $31,824.59 (25.0-00000-91006-85000-6170-2060000) William McKinley $3,703.63 (25.0-00000-91006-85000-6170-2090000) Providencia, $20,531.21 (25.0-00000-91006-85000-6170-2130000) George Washington, $8,825.31 (25.0-00000-91006-85000-6170-2160000) Theodore Roosevelt, $30,723.59 (25.0-00000-91006-85000-6170-2140000)

5_7 PlayPower Playgrounds.pdf (OF 31,442)

13.t) Approval of Agreement for Professional Services, Webb Design (General Fund)

Administrative Services, recommends that the Board of Education approve the agreement between Burbank Unified School District and Webb Foodservice Design to provide professional foodservice planning services in the amount of $15,000 effective May 8, 2026 (01.0-53100.0-00000-37000-5880-7490000) and that authority to sign the contract pursuant to BUSD AR3314, as presented.

Webb Design 050726.pdf PULLED

Approve items 13b, 13d through 13s as presented.

It was moved by Armond Aghakhanian, and seconded by Kelsey Olson, that the Board of Education approve the item as recommended. The motion carried unanimously.

14) REPORTS FROM BOARD MEMBERS

14.a) Reports from Board Members

Board of Education members will report on items within the jurisdiction of the Board.

Member Olson shared her experience meeting with the Mayor with Dr. McCoy.

Clerk Cano shared her experience attending the 100th year Anniversary of McKinley event. She encouraged community to visit the BTA website regarding the State budget.

Vice President Weisberg shared that she attended Open House at the Elementary schools. She thanked all the teachers.

Member Aghakhanian reminded community to remember to vote.

President Pontzer Kamkar shared that she also attended McKinley's 100th Anniversary event. Thanked all community members for their support.

15) ADJOURNMENT

Meeting adjourned at 11:15 p.m. in memory of Arti Varma.

MINUTES APPROVED:

_____
OSCAR MACIAS, INTERIM SUPERINTENDENT
SECRETARY OF THE BOARD

June 25, 2026

_____ _____
DATE LAURETTE CANO, CLERK

BURBANK UNIFIED SCHOOL DISTRICT

BOARD DETAIL REPORT

Printed between 05/12/2026 & 06/01/2026

PO Number	Vendor	Description	Site	Fund	Total Amount
25002346	HART DESIGN BUILD, INC.	C/O 7: INCREASE BY $8,644.96 (BOARD APPROVED 5/7/26); CARRYOVER PO; 2425-003; AQUATIC CENTER MODERNIZATION AT BURBANK HIGH; COMMUNITY REDEVELOPMENT FUNDS; BOARD APPROVED 11/21/24	FACILITIES SERVICES	400	$2,329,925.57
26000054	AMAZON CAPITAL SERVICES	C/O 1: INCREASE BY $1,500.00; 2025-26 BLANKET ORDER; COMPUTER PARTS AND SUPPLIES	TECHNOLOGY SERVICES	010	$5,000.00
26000187	AMAZON CAPITAL SERVICES	C/O 4: INCREASE BY $1,500.00; 2025-26 BLANKET ORDER; CLASSROOM AND OFFICE SUPPLIES	PROVIDENCIA ELEMENTARY	010	$6,000.00
26000188	SOUTHWEST SCHOOL & OFFICE SUPPLY	C/O 2: INCREASE BY $1,000.00; 2025-26 BLANKET ORDER; CLASSROOM AND OFFICE SUPPLIES	PROVIDENCIA ELEMENTARY	010	$3,500.00
26000196	MNSON WESTERN, LLC	C/O 2: INCREASE BY $2,000.00; 2025-26 BLANKET ORDER; TESTING MATERIALS	SPECIAL EDUCATION	010	$8,000.00
26000245	AMAZON CAPITAL SERVICES	C/O 2: INCREASE BY $250.00; 2025-26 BLANKET ORDER; CLASSROOM AND OFFICE SUPPLIES	STEVENSON ELEMENTARY	010	$6,250.00
26000259	CITY OF BURBANK	C/O 1: INCREASE BY $5,000.00; 2025-26 BLANKET ORDER; LANDFILL FACILITY USE; ACCOUNTS PAYABLE FUNDS	FACILITIES SERVICES	010	$20,000.00
26000274	JOHNSTONE SUPPLY	C/O 1: INCREASE BY $5,000.00; 2025-26 BLANKET ORDER; MAINTENANCE SUPPLIES; ON-GOING AND MAJOR MAINTENANCE FUNDS	FACILITIES SERVICES	010	$25,000.00
26000294	GRAYBAR	C/O 1: INCREASE BY $500.00; 2025-26 BLANKET ORDER; TECHNOLOGY SUPPLIES	TECHNOLOGY SERVICES	010	$2,000.00
26000297	OFFICE DEPOT/ BUSINESS SERVICES DIVISION	C/O 1: INCREASE BY $2,000.00; 2025-26 BLANKET ORDER; OFFICE SUPPLIES	LUTHER BURBANK MIDDLE SCHOOL	010	$12,000.00
26000305	OFFICE DEPOT/ BUSINESS SERVICES DIVISION	C/O 2: INCREASE BY $1,500.00; C/O 1: INCREASE BY $1,500.00; 2025-26 BLANKET ORDER; OFFICE SUPPLIES	DISNEY ELEMENTARY	010	$5,000.00
26000318	OFFICE DEPOT/ BUSINESS SERVICES DIVISION	C/O 1: INCREASE BY $1,800.00; 2025-26 BLANKET ORDER; OFFICE SUPPLIES	MC KINLEY ELEMENTARY	010	$5,800.00
26000343	FERGUSON ENTERPRISES, INC.	C/O 1: INCREASE BY $10,000.00; 2025-26 BLANKET ORDER; IRRIGATION REPAIR SUPPLIES; ON-GOING AND MAJOR MAINTENANCE FUNDS	FACILITIES SERVICES	010	$60,000.00
26000406	CANON FINANCIAL SERVICES, INC.	C/O 1: INCREASE BY $8,000.00; 2025-26 BLANKET ORDER; PRINTER MAINTENANCE CHARGES; BOARD APPROVED 2/2/23 & 6/20/24	FISCAL SERVICES	010	$65,600.00
26000482	SOUTHWEST SCHOOL & OFFICE SUPPLY	C/O 1: INCREASE BY $98.20; 2025-26 BLANKET ORDER; CLASSROOM AND OFFICE SUPPLIES	CHILD DEVELOPMENT SERVICES	120	$2,098.20
26000483	SOUTHWEST SCHOOL & OFFICE SUPPLY	C/O 2: REDUCE BY $75.59; 2025-26 BLANKET ORDER; CLASSROOM AND OFFICE SUPPLIES	WASHINGTON CHILDREN´S CENTER	120	$933.43

BOARD DETAIL REPORT

Printed between 05/12/2026 & 06/01/2026

PO Number	Vendor	Description	Site	Fund	Total Amount
26000484	SOUTHWEST SCHOOL & OFFICE SUPPLY	C/O 1: REDUCE BY $22.61; 2025-26 BLANKET ORDER; CLASSROOM AND OFFICE SUPPLIES	CHILD DEVELOPMENT SERVICES	120	$1,227.39
26000494	LEO ROSENBLUM & ASSOCIATES	C/O 1: INCREASE BY $50,000.00; PROFESSIONAL SERVICES AGREEMENT; INTERPRETING AND TRANSLATION SERVICES; SPECIAL EDUCATION FUNDS; BOARD APPROVED 5/7/26	SPECIAL EDUCATION	010	$250,000.00
26000524	WAXIE SANITARY SUPPLY	C/O 1: INCREASE BY $73.54; 2025-26 BLANKET ORDER; CUSTODIAL AND SAFETY SUPPLIES; CHILD DEVELOPMENT FUNDS	CHILD DEVELOPMENT SERVICES	120	$2,073.54
26000525	WAXIE SANITARY SUPPLY	C/O 1: REDUCE BY $73.54; 2025-26 BLANKET ORDER; CUSTODIAL AND SAFETY SUPPLIES; CHILD DEVELOPMENT FUNDS	CHILD DEVELOPMENT SERVICES	120	$1,926.46
26000547	SARAH KNAUFF SPEECH THERAPY	C/O 1: INCREASE BY $10,000.00; PROFESSIONAL SERVICES AGREEMENT; SPEECH AND LANGUAGE ASSESSMENT; SPECIAL EDUCATION FUNDS; BOARD APPROVED 6/18/25	SPECIAL EDUCATION	010	$212,450.00
26000618	AMS.NET, LLC	C/O 2: INCREASE BY $313,389.21; BOARD APPROVED 5/21/26; C/O 1: REDUCE BY $3,256,000.86; 2425-025: 2025 E-RATE NETWORK AND WIRELESS INFRASTRUCTURE PROJECT; BOND FUNDS; BOARD APPROVED 3/6/25 AND 10/9/25	TECHNOLOGY SERVICES	210	$6,126,571.87
26000624	BOYS & GIRLS CLUB OF BURBANK	C/O 2: INCREASE BY $450,000.00; CONSULTANT AGREEMENT; REDUCTION FEES FOR UNDUPLICATED STUDENTS AND GATE MONITORS; ELOP FUNDS; BOARD APPROVED 3/26/26	INSTRUCTIONAL SERVICES	010	$2,200,000.00
26000642	AMAZON CAPITAL SERVICES	C/O 4: INCREASE BY $3,000.00; 2025-26 BLANKET ORDER; CLASSROOM AND OFFICE SUPPLIES	EMERSON ELEMENTARY	010	$10,000.00
26000728	SIGN UP INTERPRETING SERVICES, LLC	C/O 3: INCREASE BY $20,000.00; CONSULTANT AGREEMENT; INTERPRETING SERVICES; BOARD APPROVED 7/24/25	PERSONNEL SERVICES	010	$170,000.00
26000891	ATKINSON, ANDELSON, LOYA, RUUD & ROMO	C/O 2: INCREASE BY $655,000.00; BOARD APPROVED 5/21/26; C/O 1; REDUCE BY $25,196.55 TO CORRECT ACCOUNTING ERROR; PROFESSIONAL SERVICES AGREEMENT; LEGAL ADVICE; BOARD APPROVED 3/6/25	FISCAL SERVICES	010	$1,174,803.45
26000966	ALPHA INTERPRETING AGENCY, CORP.	C/O 2: INCREASE BY $80,000.00; CONSULTANT AGREEMENT; DHH INTERPRETING SERVICES; BOARD APPROVED 5/21/26	PERSONNEL SERVICES	010	$205,000.00

Printed between 05/12/2026 & 06/01/2026

PO Number	Vendor	Description	Site	Fund	Total Amount
26001151	AMAZON CAPITAL SERVICES	C/O 2: INCREASE BY $2,000.00; 2025-26 BLANKET ORDER; CLASSROOM AND OFFICE SUPPLIES; TITLE I FUNDS	DISNEY ELEMENTARY	010	$5,000.00
26001190	AMAZON CAPITAL SERVICES	C/O 4: INCREASE BY $2,000.00; 2025-26 BLANKET ORDER; CLASSROOM AND OFFICE SUPPLIES	EMERSON ELEMENTARY	010	$6,500.00
26001229	CHILDCARE CAREERS LLC	C/O 1: INCREASE BY $100,000.00; CONSULTANT AGREEMENT; SUBSTITUTE STAFF PROVIDER; CHILD DEVELOPMENT FUNDS; BOARD APPROVED 5/4/26	CHILD DEVELOPMENT SERVICES	120	$300,000.00
26001253	AMAZON CAPITAL SERVICES	C/O 1: INCREASE BY $1,500.00; 2025-26 BLANKET ORDER; CLASSROOM AND OFFICE SUPPLIES; AMS FUNDS	PROVIDENCIA ELEMENTARY	010	$3,000.00
26001314	AMAZON CAPITAL SERVICES	C/O 4: INCREASE BY $2,000.00; 2025-26 BLANKET ORDER; CLASSROOM AND OFFICE SUPPLIES	LUTHER BURBANK MIDDLE SCHOOL	010	$15,170.00
26001377	SIGNAL HILL AUTO ENTERPRISES, INC.	C/O1: INCREASE BY $12,000.00; CUSTODIAL SUPPLIES; UNRESTRICTED MAINTENANCE FUNDS	FACILITIES SERVICES	010	$72,000.00
26001475	AMAZON CAPITAL SERVICES	C/O 3: INCREASE BY $1,000.00; 2025-26 BLANKET ORDER; FRC ELEMENTARY FUNDS	EMERSON ELEMENTARY	010	$5,000.00
26001612	GTG TRANSPORTATION	C/O 1: INCREASE BY $30,000.00; 2025-26 BLANKET ORDER; STUDENT TRANSPORTATION; ATHLETICS	BURBANK HIGH SCHOOL	010	$100,000.00
26001709	AMAZON CAPITAL SERVICES	C/O 3: INCREASE BY $1,000.00; 2025-26 BLANKET ORDER; CLASSROOM AND OFFICE SUPPLIES; FRC ELEMENTARY FUNDS	WASHINGTON ELEMENTARY	010	$2,690.00
26001769	RIVERSIDE INSIGHTS	C/O 1: INCREASE BY $509.35; TESTING MATERIALS	INSTRUCTIONAL SERVICES	010	$21,844.35
26001778	AMAZON CAPITAL SERVICES	C/O 2: INCREASE BY $1,00.00; 2025-26 BLANKET ORDER; CLASSROOM AND OFFICE SUPPLIES; TITLE III - LEP FUNDS	JEFFERSON ELEMENTARY	010	$2,600.00
26001783	DI PIAZZA, KELLIE JEAN	C/O 1: INCREASE BY $677.81; 2025-26 BLANKET; RETIREE MEDICAL REIMBURSEMENT	FISCAL SERVICES	670	$3,283.81
26002103	AMAZON CAPITAL SERVICES	C/O 2: INCREASE BY $5,000.00; 2025-26 BLANKET ORDER; CLASSROOM AND OFFICE SUPPLIES; TITLE I FUNDS	LUTHER BURBANK MIDDLE SCHOOL	010	$11,000.00
26002126	LINGUABEE LLC	C/O 2: INCREASE BY $5,000.00; CONSULTANT AGREEMENT; INTERPRETING SERVICES; BOARD APPROVED 6/4/26	PERSONNEL SERVICES	010	$8,000.00
26002169	AMAZON CAPITAL SERVICES	C/O 2: INCREASE BY $2,000.00; 2025-26 BLANKET ORDER; CLASSROOM AND OFFICE SUPPLIES; AMS FUNDS	LUTHER BURBANK MIDDLE SCHOOL	010	$8,000.00
26002344	COLLINS, CHANDRA	REIMBURSEMENT TO TEACHER FOR CLASSROOM SUPPLIES; GIFT FUNDS	WASHINGTON ELEMENTARY	010	$210.00
26002593	GUITAR CENTER	C/O 1: INCREASE BY $890.63; MUSICAL INSTRUMENTS; MUSIC IS INSTRUMENTAL FUNDS	DOLORES HUERTA MIDDLE SCHOOL	010	$4,502.88

Printed between 05/12/2026 & 06/01/2026

PO Number	Vendor	Description	Site	Fund	Total Amount
26002798	MILLER, GREG	REIMBURSEMENT TO PRINCIPAL FOR FOOD AND PARKING AT CONFERENCE; GIFT FUNDS	MUIR MIDDLE SCHOOL	010	$222.62
26002948	LIBRE SCHOOL SERVICES	STUDENT TRANSPORTATION; ACADEMY MUSEUM OF MOTION PICTURES	BURBANK HIGH SCHOOL	010	$1,675.00
26002950	AMAZON CAPITAL SERVICES	C/O 1: INCREASE BY $155.00; 2025-26 BLANKET ORDER; SPECIAL EDUCATION FUNDS	EMERSON ELEMENTARY	010	$655.00
26003007	FOLLETT CONTENT SOLUTIONS LLC	C/O 1: REDUCE BY $23.87; BOOKS; TITLE VI FUNDS	BURBANK HIGH SCHOOL	010	$69.67
26003043	AMAZON CAPITAL SERVICES	C/O 2 : INCREASE BY $982.35; KITCHEN EQUIPMENT; SPECIAL EDUCATION - WORKABILITY GRANT	BURBANK ADULT SCHOOL	010	$2,252.80
26003194	ACCO BRANDS CORPORATION	OFFICE EQUIPMENT; AMS FUNDS	DISNEY ELEMENTARY	010	$2,836.63
26003233	GOPHER SPORT	C/O 1: REDUCY BY $25.52; PLAYGROUND SUPPLIES	EMERSON ELEMENTARY	010	$142.84
26003259	ALL AMERICAN TROPHY & ENGRAVING CO	STUDENT AWARDS	BRET HARTE ELEMENTARY	010	$278.63
26003274	DICK BLICK CO	C/O 1: REDUCE BY $20.95; CLASSROOM SUPPLIES	JOHN BURROUGHS HIGH SCHOOL	010	$192.89
26003290	GIRARD & PETERSON INC	EQUIPMENT REPAIR BY VENDOR; ON-GOING AND MAJOR MAINTENANCE FUNDS	FACILITIES SERVICES	010	$280.00
26003291	PLUMBING WHOLESALE OUTLET INC	FACILITY REPAIR MATERIAL; ON-GOING AND MAJOR MAINTENANCE FUNDS	MILLER ELEMENTARY	010	$844.21
26003292	AREY JONES EDUCATIONAL SOLUTIONS	COMPUTER EQUIPMENT; ADULT EDUCATION-BLOCK GRANT	BURBANK ADULT SCHOOL	110	$4,110.23
26003293	AMAZON CAPITAL SERVICES	CLASSROOM SUPPLIES	BURBANK HIGH SCHOOL	010	$270.69
26003294	AMAZON CAPITAL SERVICES	CLASSROOM SUPPLIES AND EQUIPMENT	BURBANK HIGH SCHOOL	010	$1,122.14
26003295	INFINITY BACKFLOW & PLUMBING SERVICE	EMERGENCY BACKFLOW REPAIR AT BHS POOL; ON-GOING AND MAJOR MAINTENANCE FUNDS	FACILITIES SERVICES	010	$2,500.00
26003296	AMAZON CAPITAL SERVICES	2025-26 BLANKET ORDER; CLASSROOM AND OFFICE SUPPLIES; SPED IDEA MENTAL HEALTH FUNDS	SPECIAL EDUCATION	010	$10,500.00
26003297	AMAZON CAPITAL SERVICES	2025-26 BLANKET ORDER; CLASSROOM AND OFFICE SUPPLIES; GIFT FUNDS	ROOSEVELT ELEMENTARY	010	$2,500.00
26003298	AMAZON CAPITAL SERVICES	2025-26 BLANKET ORDER; CLASSROOM AND OFFICE SUPPLIES	MILLER ELEMENTARY	010	$600.00
26003299	AMAZON CAPITAL SERVICES	2025-26 BLANKET ORDER; CLASSROOM AND OFFICE SUPPLIES; AMS FUNDS	MAGNOLIA PARK	010	$1,511.10
26003300	PROFESSIONAL DRUM SHOP, INC.	MUSICAL INSTRUMENT REPAIRS; ACCOUNTS RECEIVABLE	MUIR MIDDLE SCHOOL	010	$506.92
26003301	JPMORGAN CHASE BANK	BOOKS; BAEF FUNDS	PROVIDENCIA ELEMENTARY	010	$1,000.30
26003302	APPLE COMPUTER ED SALES	COMPUTER EQUIPMENT; SPECIAL EDUCATION FUNDS	SPECIAL EDUCATION	010	$1,572.90
26003303	LAKESHORE CURRICULUM MATERIAL	CLASSROOM SUPPLIES AND EQUIPMENT	DISNEY ELEMENTARY	010	$1,103.06

BURBANK UNIFIED SCHOOL DISTRICT

BOARD DETAIL REPORT

Printed between 05/12/2026 & 06/01/2026

PO Number	Vendor	Description	Site	Fund	Total Amount
26003304	GLOBAL EQUIPMENT COMPANY INC	OUTDOOR FURNITURE	ROOSEVELT ELEMENTARY	010	$2,909.11
26003305	LAKESHORE CURRICULUM MATERIAL	CARPETS	DISNEY ELEMENTARY	010	$1,648.42
26003306	SOUTHWEST SCHOOL & OFFICE SUPPLY	2025-26 BLANKET ORDER; CLASSROOM AND OFFICE SUPPLIES; ELOP FUNDS	CHILD DEVELOPMENT SERVICES	010	$15,000.00
26003307	GLOBAL EQUIPMENT COMPANY INC	FURNITURE; GIFT FUNDS	PROVIDENCIA ELEMENTARY	010	$1,318.12
26003308	HOUGHTON MIFFLIN HARCOURT SCHOOL DIVISION	SOFTWARE LICENSE; TITLE III FUNDS	BURBANK HIGH SCHOOL	010	$23,102.74
26003309	US BANK NATIONAL ASSOCIATION	LATE PAYMENT FEE ON CLOSED ACCCOUNT	DISTRICT OFFICE	010	$70.21
26003310	AMAZON CAPITAL SERVICES	2025-26 BLANKET ORDER; CLASSROOM AND OFFICE SUPPLIES; ELOP FUNDS	CHILD DEVELOPMENT SERVICES	010	$16,575.00
26003311	AMAZON CAPITAL SERVICES	CLASSROOM AND OFFICE EQUIPMENT	MONTEREY HIGH SCHOOL	010	$447.17
26003312	AMAZON CAPITAL SERVICES	PLAYGROUND SUPPLIES	EMERSON ELEMENTARY	010	$67.38
26003313	AMAZON CAPITAL SERVICES	MUSICAL INSTRUMENT; BAEF FUNDS	JOHN BURROUGHS HIGH SCHOOL	010	$2,079.60
26003314	AMAZON CAPITAL SERVICES	CLASSROOM SUPPLIES	JOHN BURROUGHS HIGH SCHOOL	010	$130.94
26003315	B & H FOTO & ELECTRONICS CORP	AUDITORIUM AV EQUIPMENT; PROP 28 FUNDS	DOLORES HUERTA MIDDLE SCHOOL	010	$23,128.22
26003316	AMAZON CAPITAL SERVICES	BOOKS; BAEF FUNDS	PROVIDENCIA ELEMENTARY	010	$717.20
26003317	GRAY STEP SOFTWARE, INC.	ASB SOFTWARE	FISCAL SERVICES	010	$5,392.74
26003318	PROFESSIONAL TURF SPECIALTIES, INC.	SOFTBALL FIELD MAINTENANCE AT MCCAMBRIDGE PARK; ON-GOING AND MAJOR MAINTENANCE FUNDS	FACILITIES SERVICES	010	$18,200.00
26003319	FOLLETT CONTENT SOLUTIONS LLC	C/O 1: REDUCE BY $219.78; BOOKS; ELOP FUNDS	STEVENSON ELEMENTARY	010	$1,010.75
26003320	FOLLETT CONTENT SOLUTIONS LLC	C/O 1: REDUCE BY $607.61;BOOKS; ELOP FUNDS	MILLER ELEMENTARY	010	$1,361.57
26003321	FOLLETT CONTENT SOLUTIONS LLC	C/O 1: REDUCE BY $197.57; BOOKS; ELOP FUNDS	MC KINLEY ELEMENTARY	010	$694.41
26003322	FOLLETT CONTENT SOLUTIONS LLC	C/O 1; REDUCE BY $562.20; BOOKS; ELOP FUNDS	JEFFERSON ELEMENTARY	010	$1,196.04
26003323	AMAZON CAPITAL SERVICES	CLASSROOM SUPPLIES; MUSIC IS INSTRUMENTAL FUNDS	EDISON ELEMENTARY	010	$643.11
26003324	AMAZON CAPITAL SERVICES	CLASSROOM SUPPLIES	DISNEY ELEMENTARY	010	$251.59
26003325	SPECIAL EDUCATION PARENTS	SETTLEMENT AGREEMENT; REIMBURSEMENT TO PARENTS FOR COMPENSATORY EDUCATION SERVICES AND ASSESSMENTS; SPECIAL EDUCATION FUNDS; BOARD APPROVED 4/9/26	SPECIAL EDUCATION	010	$53,700.00

Printed between 05/12/2026 & 06/01/2026

PO Number	Vendor	Description	Site	Fund	Total Amount
26003326	ROSALES-KIM, LESLIE	REIMBURSEMENT TO TEACHER FOR CLASSROOM SUPPLIES; SPECIAL EDUCATION FUNDS	SPECIAL EDUCATION	010	$90.40
26003327	AREY JONES EDUCATIONAL SOLUTIONS	COMPUTER EQUIPMENT; SPECIAL EDUCATION FUNDS	SPECIAL EDUCATION	010	$2,852.57
26003328	AMAZON CAPITAL SERVICES	2025-26 BLANKET ORDER; CLASSROOM AND OFFICE SUPPLIES; SPED WORKABILITY GRANT	SPECIAL EDUCATION	010	$2,233.65
26003329	ANATOMY WAREHOUSE	ANATOMY MODELS; ADULT EDUCATION-BLOCK GRANT	BURBANK ADULT SCHOOL	110	$11,008.01
26003330	ZEN EDUCATE INC.	CONSULTANT AGREEMENT; SUBSTITUTE TEACHER AGENCY; CHILD DEVELOPMENT FUNDS; BOARD APPROVED 6/4/26	CHILD DEVELOPMENT SERVICES	120	$10,000.00
26003331	JPMORGAN CHASE BANK	EVENT DECOR	LUTHER BURBANK MIDDLE SCHOOL	010	$532.96
26003332	B & H FOTO & ELECTRONICS CORP	PROJECTOR FOR AUDITORIUM; TITLE I FUNDS	DOLORES HUERTA MIDDLE SCHOOL	010	$21,369.28
26003333	RALUY MARTINEZ, LISA	RIEMBURSEMENT TO TEACHER FOR A COURSE CERTIFICATE; CTE - UNRESTRICTED FUNDS	LUTHER BURBANK MIDDLE SCHOOL	010	$125.00
26003334	ARMITAGE, KENYAN	CONSULTANT AGREEMENT; MURAL PROJECT AT EMERSON; BAEF AND PTA FUNDS; BOARD APPROVED 5/7/26	EMERSON ELEMENTARY	010	$20,000.00
26003335	JPMORGAN CHASE BANK	CLASSROOM SUPPLIES; TITLE I FUNDS	EMERSON ELEMENTARY	010	$174.00
26003336	BAND TODAY, LLC	CLASSROOM SUPPLIES	BURBANK HIGH SCHOOL	010	$730.00
26003337	ALL AMERICAN TROPHY & ENGRAVING CO	STUDENT AWARDS	LUTHER BURBANK MIDDLE SCHOOL	010	$1,039.81
26003338	IXL LEARNING	SOFTWARE LICENSE; TITLE I FUNDS; BOARD APPROVED 6/18/25	DOLORES HUERTA MIDDLE SCHOOL	010	$16,875.00
26003339	JPMORGAN CHASE BANK	BOOKS; BAEF FUNDS	PROVIDENCIA ELEMENTARY	010	$269.87
26003340	SCHLEINKOFER, LORI	REIMBURSEMENT TO SPED PROGRAM SPECIALIST AT WORKABILITY FOR FOOD AND MILEAGE FOR CONFERENCE; SPECIAL EDUCATION - WORKABILITY GRANT	SPECIAL EDUCATION	010	$310.36
26003341	HOWITT, ELAYNE	REIMBURSEMENT TO TEACHER FOR FOOD AND PARKING AT CONFERENCE; SPECIAL EDUCATION - WORKABILITY GRANT	SPECIAL EDUCATION	010	$74.45
26003342	HARRISON, LISA	REIMBURSEMENT TO TEACHER FOR SOFTWARE; SPECIAL EDUCATION FUNDS; BOARD APPROVED 6/18/25	SPECIAL EDUCATION	010	$200.00
26003343	JPMORGAN CHASE BANK	FURNITURE; GIFT FUNDS	PROVIDENCIA ELEMENTARY	010	$1,413.41
26003344	ANDERS, ROBYN	REIMBURSEMENT TO DIRECTOR OF INSTRUCTIONAL TECHNOLOGY FOR FOOD FOR EVENT; A-G LEARNING LOSS MITIGATION	INSTRUCTIONAL SERVICES	010	$231.40
26003345	STUDIES WEEKLY INC	E-BOOKS; TITLE I FUNDS	DISNEY ELEMENTARY	010	$1,233.70

Printed between 05/12/2026 & 06/01/2026

PO Number	Vendor	Description	Site	Fund	Total Amount
26003346	THE MUSIC CENTER	CONSULTANT AGREEMENT; STUDENT ASSEMBLY; BOARD APPROVED 5/7/26	DISNEY ELEMENTARY	010	$75.00
26003347	MB DANCE INC	CONSULTANT AGREEMENT; DANCE INSTRUCTION; AMS FUNDS; BOARD APPROVED 3/26/26	JEFFERSON ELEMENTARY	010	$13,950.00
26003348	SCHOOL NURSE SUPPLY	HEALTH SUPPLIES; SPECIAL EDUCATION FUNDS	JOHN BURROUGHS HIGH SCHOOL	010	$278.23
26003349	SCHOOL NURSE SUPPLY	HEALTH SUPPLIES; SPECIAL EDUCAITON FUNDS	WASHINGTON ELEMENTARY	010	$411.58
26003350	AMAZON CAPITAL SERVICES	BOOKS; BAEF FUNDS	PROVIDENCIA ELEMENTARY	010	$460.24
26003351	B & H FOTO & ELECTRONICS CORP	CAMERA EQUIPMENT; BAEF AND ACCOUNTS RECEIVABLE FUNDS	JOHN BURROUGHS HIGH SCHOOL	010	$4,641.80
26003352	GUITAR CENTER	MUSICAL INSTRUMENT; MUSIC IS INSTRUMENTAL FUNDS	BURBANK HIGH SCHOOL	010	$7,392.45
26003353	WILLIAM V MACGILL & COMPANY	HEALTH SUPPLIES; ELOP FUNDS	MC KINLEY ELEMENTARY	010	$418.82
26003354	WILLIAM V MACGILL & COMPANY	HEALTH SUPPLIES; ELOP FUNDS	MILLER ELEMENTARY	010	$418.82
26003355	WILLIAM V MACGILL & COMPANY	HEALTH SUPPLIES; ELOP FUNDS	STEVENSON ELEMENTARY	010	$418.82
26003356	WILLIAM V MACGILL & COMPANY	HEALTH SUPPLIES; ELOP FUNDS	JEFFERSON ELEMENTARY	010	$418.82
26003357	DEVIRGILIS, EDWARD	REIMBURSEMENT TO TEACHER FOR CUSTOM CLOTHING FOR EVENT; GIFT FUNDS	MUIR MIDDLE SCHOOL	010	$112.00
26003358	VARGAS, THERESA	REIMBURSEMENT TO TEACHER FOR CONFERENCE TRAVEL AND STAY EXPENSES; TITLE III IMMIGRANT EDUCATION FUNDS	DOLORES HUERTA MIDDLE SCHOOL	010	$1,032.00
26003359	DEVORE, ADAM	REIMBURSEMENT TO ASSISTANT PRINCIPAL FOR FOOD FOR EVENT	DOLORES HUERTA MIDDLE SCHOOL	010	$99.90
26003360	WEISS, JOSHUA	REIMBURSEMENT TO TEACHER FOR SOFTWARE LICENSE; TITLE I FUNDS	DOLORES HUERTA MIDDLE SCHOOL	010	$216.00
26003361	FUHR, AMY	REIMBURSEMENT TO TEACHER FOR CLASSROOM SUPPLIES	DOLORES HUERTA MIDDLE SCHOOL	010	$62.51
26003362	AMAZON CAPITAL SERVICES	CLASSROOM EQUIPMENT; AMS FUNDS	HORACE MANN CHILDREN´S CENTER	010	$367.38
26003363	INFINITY BACKFLOW & PLUMBING SERVICE	FACILITY REPAIR BY VENDOR; ON-GOING AND MAJOR MAINTENANCE FUNDS	BURBANK HIGH SCHOOL	010	$765.86
26003364	TRULITE	FACILITY REPAIR MATERIAL; ON-GOING AND MAJOR MAINTENANCE FUNDS	ROOSEVELT ELEMENTARY	010	$90.73
26003365	MUSCO CORPORATION	EQUIPMENT RENTAL; ON-GOING AND MAJOR MAINTENANCE FUNDS	JOHN BURROUGHS HIGH SCHOOL	010	$475.00
26003366	CALIFORNIA PAVING & GRADING CO INC	ASPHALT REPAIR AT ROOSEVELT ELEMENTARY; DEFERRED MAINTENANCE FUNDS	FACILITIES SERVICES	140	$4,615.00
26003367	MARIPOSA TREE MANAGEMENT INC	TREE PRUNING AND REMOVAL AT VARIOUS SITES; ON-GOING AND MAJOR MAINTENANCE FUNDS	FACILITIES SERVICES	010	$9,785.00

BOARD DETAIL REPORT

Printed between 05/12/2026 & 06/01/2026

PO Number	Vendor	Description	Site	Fund	Total Amount
26003368	WEISBERG, EMILY	REIMBURSEMENT BOARD MEMBER FOR TRAVEL EXPENSES	SUPERINTENDENT ´S OFFICE	010	$890.34
26003369	ZAKARIAN, VIVIAN	REIMBURSEMENT TO TEACHER FOR CLASSROOM SUPPLIES	EMERSON ELEMENTARY	010	$47.91
26003370	PLAYPOWER LT FARMINGTON INC.	PLAYGROUND EQUIPMENT AND RETROFIT; CAPITAL FACILITIES FUNDS; BOARD APPROVED 5/7/26	BRET HARTE ELEMENTARY	250	$29,976.05
26003370	PLAYPOWER LT FARMINGTON INC.	PLAYGROUND EQUIPMENT AND RETROFIT; CAPITAL FACILITIES FUNDS; BOARD APPROVED 5/7/26	DISNEY ELEMENTARY	250	$17,416.57
26003370	PLAYPOWER LT FARMINGTON INC.	PLAYGROUND EQUIPMENT AND RETROFIT; CAPITAL FACILITIES FUNDS; BOARD APPROVED 5/7/26	EMERSON ELEMENTARY	250	$9,314.04
26003370	PLAYPOWER LT FARMINGTON INC.	PLAYGROUND EQUIPMENT AND RETROFIT; CAPITAL FACILITIES FUNDS; BOARD APPROVED 5/7/26	JEFFERSON ELEMENTARY	250	$31,824.59
26003370	PLAYPOWER LT FARMINGTON INC.	PLAYGROUND EQUIPMENT AND RETROFIT; CAPITAL FACILITIES FUNDS; BOARD APPROVED 5/7/26	MC KINLEY ELEMENTARY	250	$3,703.63
26003370	PLAYPOWER LT FARMINGTON INC.	PLAYGROUND EQUIPMENT AND RETROFIT; CAPITAL FACILITIES FUNDS; BOARD APPROVED 5/7/26	PROVIDENCIA ELEMENTARY	250	$20,531.20
26003370	PLAYPOWER LT FARMINGTON INC.	PLAYGROUND EQUIPMENT AND RETROFIT; CAPITAL FACILITIES FUNDS; BOARD APPROVED 5/7/26	ROOSEVELT ELEMENTARY	250	$30,723.59
26003370	PLAYPOWER LT FARMINGTON INC.	PLAYGROUND EQUIPMENT AND RETROFIT; CAPITAL FACILITIES FUNDS; BOARD APPROVED 5/7/26	WASHINGTON ELEMENTARY	250	$8,825.31
26003371	SHAZARIAN, ARPINE	REIMBURSEMENT TO TEACHER FOR CLASSROOM SUPPLIES	EMERSON ELEMENTARY	010	$49.71
26003372	DEMCO INC	RUG; FRC ELEMENTARY FUNDS	JEFFERSON ELEMENTARY	010	$1,421.81
26003373	IXL LEARNING	SOFTWARE LICENSE; SPECIAL EDUCATION FUNDS; BOARD APPROVED 6/18/25	MUIR MIDDLE SCHOOL	010	$959.00
26003374	SPECIAL EDUCATION PARENT	SETTLEMENT AGREEMENT; REIMBURSMENT TO PARENT FOR TUITION; SPECIAL EDUCATION FUNDS; BOARD APPROVED 5/7/26	SPECIAL EDUCATION	010	$25,000.00
26003375	COSCO FIRE PROTECTION INC	FACILITY REPAIR MATERIALS; ON-GOING AND MAJOR MAINTENANCE FUNDS	FACILITIES SERVICES	010	$803.50
26003376	MYSTERY SCIENCE INC	SOFTWARE LICENSE; TITLE I FUNDS; BOARD APPROVED 6/18/26	WASHINGTON ELEMENTARY	010	$1,799.00
26003377	MULTI - HEALTH SYSTEMS	TESTING MATERIALS	SPECIAL EDUCATION	010	$550.00
26003378	ALPERT, MADELINE	REIMBURSEMENT TO TEACHER FOR SOFTWARE LICENSE	BURBANK HIGH SCHOOL	010	$32.00
26003379	SULLIVAN, JILL	CONSULTANT AGREEMENT; TEACHER INDUCTION PROGRAM; BOARD APPROVED 5/7/26	INSTRUCTIONAL SERVICES	010	$2,245.00
26003380	MACHOLLYWOOD, INC.	COMPUTER EQUIPMENT; AMS FUNDS	BURBANK HIGH SCHOOL	010	$24,075.60

BOARD DETAIL REPORT

Printed between 05/12/2026 & 06/01/2026

PO Number	Vendor	Description	Site	Fund	Total Amount
26003381	CALIFORNIA PAVING & GRADING CO INC	ASPHALT REPAIR AT JEFFERSON ELEMENTARY; DEFERRED MAINTENANCE FUNDS	FACILITIES SERVICES	140	$8,010.00
26003382	MERRY PLUMBING CO INC	GAS LINE REGULATOR REPLACEMENT AT BHS POOL; ON-GOING AND MAJOR MAINTENANCE FUNDS	FACILITIES SERVICES	010	$5,169.25
26003383	THE MUSIC CENTER	CONSULTANT AGREEMENT; ART INSTRUCTION; SPECIAL EDUCATION FUNDS; BOARD APPROVED 3/5/26	MAGNOLIA PARK	010	$4,631.00
26003384	PRISMATIC MAGIC LLC	CONSULTANT AGREEMENT; STUDENT ASSEMBLY; ELOP FUNDS; BOARD APPROVED 6/4/26	INSTRUCTIONAL SERVICES	010	$3,297.00
26003385	MANOUKIAN, ZARE	REIMBURSEMENT TO TITLE I COORDINATOR FOR CONFERENCE REGISTRATION; TITLE I FUNDS	LUTHER BURBANK MIDDLE SCHOOL	010	$179.00
26003386	JIMENEZ, SALVADOR	REIMBURSEMENT TO OFFICE MANAGER FOR FOOD FOR EVENT; FILM LA FUNDS	LUTHER BURBANK MIDDLE SCHOOL	010	$116.78
26003387	LOPEZ, YESENIA	REIMBURSEMENT TO ASSISTANT PRINCIPAL FOR GRADUATION AWARDS AND SUPPLIES	LUTHER BURBANK MIDDLE SCHOOL	010	$445.68
26003388	ROSALES-KIM, LESLIE	REIMBURSEMENT TO TEACHER FOR CLASSROOM SUPPLIES; SPECIAL EDUCATION FUNDS	SPECIAL EDUCATION	010	$80.83
26003389	JUNKERMEIER, JOSHUA	REIMBURSEMENT TO TEACHER FOR CLASSROOM SUPPLIES; CTE - UNRESTRICTED FUNDS	INSTRUCTIONAL SERVICES	010	$294.53
26003390	JPMORGAN CHASE BANK	FLORAL ARRNGEMENTS FOR EVENT	LUTHER BURBANK MIDDLE SCHOOL	010	$1,179.81
26003391	DEPARTMENT OF INDUSTRIAL RELATIONS	CONVEYANCE INSPECTION FEES FOR DISNEY ELEMENTARY SCHOOL; ON-GOING AND MAJOR MAINTENANCE FUNDS	FACILITIES SERVICES	010	$125.00
26003392	AMAZON CAPITAL SERVICES	TECHNOLOGY SUPPLIES; BAEF FUNDS	DOLORES HUERTA MIDDLE SCHOOL	010	$2,884.68
26003393	SCHOOL OUTFITTERS	CLASSROOM SUPPLIES; AMS AND GENERAL FUNDS	MILLER ELEMENTARY	010	$10,353.76
26003394	SWEETWATER SOUND INC	MUSICAL INSTRUMENT SUPPLIES	JOHN BURROUGHS HIGH SCHOOL	010	$503.82
26003395	POCKET NURSE	MEDICAL PROGRAM EQUIPMENT AND SUPPLIES; ADULT EDUCATION-BLOCK GRANT FUNDS	BURBANK ADULT SCHOOL	110	$31,468.12
26003396	HELLAS CONSTRUCTION, INC.	2526-022 TURF REPLACEMENT AT MEMORIAL FIELD; BOND FUND; BOARD APPROVED 5/21/26	FACILITIES SERVICES	210	$1,056,677.60
26003397	FRANKLIN COVEY	MEMBERSHIP FEES; TITLE I FUNDS	LUTHER BURBANK MIDDLE SCHOOL	010	$10,775.05
26003398	MERRY PLUMBING CO INC	BACKFLOW REPLACEMENT AT BHS POOL; ON-GOING AND MAJOR MAINTENANCE FUNDS	FACILITIES SERVICES	010	$8,507.12
26003399	QUAVERED INC.	STAFF TRAINING; MUSIC IS INSTRUMENTAL FUNDS	INSTRUCTIONAL SERVICES	010	$1,800.00
26003400	GUTIERREZ, FRANCISCO	REIMBURSEMENT TO TEACHER FOR CONFERENCE; TITLE I FUNDS	DOLORES HUERTA MIDDLE SCHOOL	010	$129.00

BOARD DETAIL REPORT

Printed between 05/12/2026 & 06/01/2026

PO Number	Vendor	Description	Site	Fund	Total Amount
26003401	ULINE - Attn: ACCOUNTS RECEIVABLES	CUSTODIAL SUPPLIES; ADULT EDUCATION - BLOCK GRANT	BURBANK ADULT SCHOOL	110	$1,019.96
26003402	NO HOLDEN BACK, LLC	CONSULTANT AGREEMENT; STUDENT ASSEMBLIES; PTA FUNDS; BOARD APPROVED 5/21/26	EMERSON ELEMENTARY	010	$2,594.00
26003403	MEZA, MANUELA	REIMBURSEMENT TO TEACHER FOR CLASSROOM SUPPLIES; ADULT EDUCATION - BLOCK GRANT	BURBANK ADULT SCHOOL	110	$290.38
26003404	PRO LINE GYM FLOORS INC.	JANITORIAL SUPPLIES; ON-GOING AND MAJOR MAINTENANCE FUNDS	FACILITIES SERVICES	010	$2,867.75
26003405	LAVENTURE, TODD	REIMBURSEMENT TO PRINCIPAL FOR CONFERENCE STAY AND MILEAGE; ADULT EDUCATION - BLOCK GRANT	BURBANK ADULT SCHOOL	110	$1,502.98
26003406	MCCALLA COMPANY JANITORIAL SUPPLIES	JANITORIAL EQUIPMENT; ON-GOING AND MAJOR MAINTENANCE FUNDS	FACILITIES SERVICES	010	$15,912.00
26003407	THE IMAGINATION MACHINE INC	CONSULTANT AGREEMENT; STUDENT ASSEMBLY; PTA FUNDS; BOARD APPROVED 5/7/26	ROOSEVELT ELEMENTARY	010	$2,489.47
26003408	WILLIAMSON, TERRY	REIMBURSEMENT TO TEACHER FOR EVENT FOOD AND SUPPLIES	INSTRUCTIONAL SERVICES	010	$125.90
26003409	ADORAMA CAMERA	CLASSROOM EQUIPMENT; AMS FUNDS AND ACCOUNTS RECEIVABLE	JOHN BURROUGHS HIGH SCHOOL	010	$5,101.51
26003410	CDW-G - COMPUTER DISCOUNT WHSE	C/O 1: CANCEL ORDER; CHARGING CARTS; ADULT EDUCATION BLOCK-GRANT	BURBANK ADULT SCHOOL	110	$10,635.63
26003411	NOGUERA, JUAN	REIMBURSEMENT TO DIRECTOR OF BAS FOR CONFERENCE STAY AND MILEAGE; ADULT EDUCATION - BLOCK GRANT	BURBANK ADULT SCHOOL	110	$1,020.54
26003412	FISHER ATHLETIC EQUIPMENT INC.	ATHLETIC EQUIPMENT	JOHN BURROUGHS HIGH SCHOOL	010	$6,490.52
26003413	CHAVEZ, YANIRA I	REIMBURSEMENT TO TEACHER FOR CONFERENCE REGISTRATION, HOTEL STAY, AND MILEAGE; ADULT EDUCATION - BLOCK GRANT	BURBANK ADULT SCHOOL	110	$1,626.44
26003414	MALOOF, TIMOTHY	REIMBURSEMENT TO TEACHER FOR EXAM FEES; ADULT EDUCATION - BLOCK GRANT	BURBANK ADULT SCHOOL	110	$218.55
26003415	MARK FORTIER	CONSULTANT AGREEMENT; DJ SERVICE; BOARD APPROVAL PENDING	MUIR MIDDLE SCHOOL	010	$300.00
26003416	GUITAR CENTER	MUSICAL INSTRUMENTS; BAEF FUNDS	JOHN BURROUGHS HIGH SCHOOL	010	$1,612.08
26003417	STEVE WEISS MUSIC	CLASSROOM SUPPLIES; BAEF FUNDS	JOHN BURROUGHS HIGH SCHOOL	010	$317.83
26003418	MEJIA, ASHLEY	REIMBURSEMENT TO TEACHER FOR SIGN LANGUAGE CLASSES	PERSONNEL SERVICES	010	$213.00
26003419	HECTOR M LOPEZ	FOOD FOR EVENT	MUIR MIDDLE SCHOOL	010	$2,270.00
26003420	CARREON NURSERY	PLANTS FOR CAMPUS; ACCOUNT RECEIVABLE AND GENERAL FUNDS	MUIR MIDDLE SCHOOL	010	$2,622.17
26003421	LURIE, JEN	REIMBURSEMENT TO FINANCE TECH FOR PLAQUES	DOLORES HUERTA MIDDLE SCHOOL	010	$358.59
26003422	ALL FOR KIDZ INC	FUNDRAISING SUPPLIES; FRC ELEMENTARY FUNDS	PROVIDENCIA ELEMENTARY	010	$3,318.00

BOARD DETAIL REPORT

Printed between 05/12/2026 & 06/01/2026

PO Number	Vendor	Description	Site	Fund	Total Amount
26003423	UNITED SITE SERVICES	PORTABLE TOILET CLEANING SERVICES; ON-GOING AND MAJOR MAINTENANCE FUNDS	FACILITIES SERVICES	010	$550.64
26003425	PREMIUM QUALITY LIGHTING	SUPPLIES; ON-GOING AND MAJOR MAINTENANCE FUNDS	FACILITIES SERVICES	010	$3,504.62
26003426	SCHOOL EMPLOYERS ASSOCIATION OF CALIFORNIA	CONSULTANT AGREEMENT; HUMAN RESOURCES SUPPORT; BOARD APPROVED 5/21/26	PERSONNEL SERVICES	010	$30,000.00
26003427	LACOE	OSS ADMISSION FEES; WRIGHTWOOD; GIFT FUNDS; BOARD APPROVED 6/18/25	PROVIDENCIA ELEMENTARY	010	$20,643.50
26003428	PRO LINE GYM FLOORS INC.	GYM FLOOR MAINTENANCE AT JBHS; JOINT USE FUNDS	FACILITIES SERVICES	010	$12,725.00
26003429	PRO LINE GYM FLOORS INC.	GYM FLOOR MAINTENANCE AT HUERTA, LUTHER AND MUIR MIDDLE SCHOOLS; JOINT USE FUNDS	FACILITIES SERVICES	010	$9,225.00
26003430	PRO LINE GYM FLOORS INC.	GYM FLOOR MAINTENANCE AT BHS; JOINT USE FUNDS	FACILITIES SERVICES	010	$12,100.00
26003431	YUSAIR, INC.	SOFTWARE LICENSE; ADULT EDUCATION - BLOCK GRANT; BOARD APPROVED 5/7/26	BURBANK ADULT SCHOOL	110	$15,000.00
26003432	FIRST STUDENT, INC	STUDENT TRANSPORTATION; LEONIS ADOBE MUSEUM AND LA ZOO; PTA AND FRC ELEMENTARY FUNDS	EDISON ELEMENTARY	010	$3,977.18
26003433	NITTIS, PASCAL	REIMBURSEMENT TO DEPARTMENT CHAIR FOR HOTEL STAY FOR CONFERENCE; ADULT EDUCATION - BLOCK GRANT	BURBANK ADULT SCHOOL	110	$430.51
26003434	VEHUNI, LILIT	REIMBURSEMENT TO TEACHER FOR MILEAGE; ADULT EDUCATION - BLOCK GRANT	BURBANK ADULT SCHOOL	110	$168.93
26003435	SOLORZANO, CARLOS	REIMBURSEMENT TO TEACHER FOR EXAM FEES	PERSONNEL SERVICES	010	$500.00
26003436	CHALMERS CONSTRUCTION SERVICES INC.	2526-013 SITE PREPARATION FOR RELOCATABLE CLASSROOMS AT BURBANK ADULT SCHOOL; ADULT EDUCATION FUND	FACILITIES SERVICES	110	$380,000.00
26003437	DEVORE, ADAM	REIMBURSEMENT TO ASSITANT PRINCIPAL FOR FOOD FOR EVENT; GIFT FUNDS	DOLORES HUERTA MIDDLE SCHOOL	010	$68.02
26003438	JPMORGAN CHASE BANK	FOOD FOR EVENT; FRC ELEMENTARY FUNDS	ROOSEVELT ELEMENTARY	010	$441.89
26003440	SEESE, LAURA	REIMBURSEMENT TO ASSISTANT PRINCIPAL FOR FOOD FOR EVENT; GIFT FUNDS	DOLORES HUERTA MIDDLE SCHOOL	010	$164.60
26003441	SEESE, LAURA	REIMBURSEMENT TO ASSISTANT PRINCIPAL FOR FOOD FOR EVENT; GIFT FUNDS	DOLORES HUERTA MIDDLE SCHOOL	010	$149.18
26003442	DEVORE, ADAM	REIMBURSEMENT TO ASSISTANT PRINCIPAL FOR FOOD FOR EVENT; GIFT FUNDS	DOLORES HUERTA MIDDLE SCHOOL	010	$477.78
26003443	CDW-G - COMPUTER DISCOUNT WHSE	COMPUTER EQUIPMENT; ADULT EDUCATION - BLOCK GRANT	BURBANK ADULT SCHOOL	110	$1,519.38

BOARD DETAIL REPORT

Printed between 05/12/2026 & 06/01/2026

PO Number	Vendor	Description	Site	Fund	Total Amount
26003444	DSK LLP	PROFESSIONAL SERVICES: ARCHITECTURAL SERVICES FOR ENTRY SECURITY AT WASHINGTON ELEMENTARY; BOND FUNDS; BOARD APPROVED 5/21/26	FACILITIES SERVICES	210	$315,480.00
26003445	MAUREEN T PALACIOS	BOOKS; TITLE I FUNDS	MILLER ELEMENTARY	010	$450.52
26003446	LIBRE SCHOOL SERVICES	STUDENT TRANSPORTATION; LA ZOO & DISCOVERY CUBE; GIFT FUNDS	MILLER ELEMENTARY	010	$3,260.00
		PO Count:	**208**	**Total:**	**$16,054,183.66**

Printed between 05/12/2026 & 06/01/2026

BOARD FUND SUMMARY

Fund	Description	PO Count	Total Fund Amount
010	General Fund - Unrestricted	178	$5,279,026.15
110	Adult Education Fund	15	$460,019.66
120	Child Development Fund	7	$318,259.02
140	Deferred Maintenance Fund	2	$12,625.00
210	Building Fund	3	$7,498,729.47
250	Capital Facilities Fund	1	$152,314.98
400	Special Res./for Cap. Outlay	1	$2,329,925.57
670	Self Insurance Fund	1	$3,283.81
		Total:	**$16,054,183.66**

PURCHASE ORDER

BURBANK UNIFIED SCHOOL DISTRICT

1900 WEST OLIVE AVE, BURBANK, CA 91506-2460
Phone: (818) 729-4400 Fax: (818) 729-4534

PURCHASE ORDER NO.
25002346
Show this number on invoices, packages and correspondence.

VENDOR

HART DESIGN BUILD, INC.
3449 ANGELUS AVE
GLENDALE, CA 91208

Phone: (818) 482-5241 **Fax:**

SHIP TO

BURBANK UNIFIED SCHOOL DISTRICT
BURBANK HIGH SCHOOL
902 N. THIRD ST.
BURBANK, CA 91502-1091

For: FACILITIES SERVICES
COZAKOS/MAXWELL

PO Date: 08/28/2025 **Deliver By:** 06/30/2026 **Buyer Name:** David Gerharter

ITEM NO.	QTY ORDERED	UNIT OF ISSUE	DESCRIPTION	UNIT PRICE	AMOUNT
1	1	CO	CHANGE ORDER #7, INCREASE BY $8,644.96 FOR A REVISED TOTAL OF $2,329,925.57 AS PER REQ R0003312. TO FACILITATE ITEMS NOT INCLUDED IN THE ORIGINAL DESIGN AND SCOPE OF THE CONTRACT THIS CHANGE ORDER BRINGS THE TOTAL NOT TO EXCEED AMOUNTOF THIS CONTRACT TO $3,613,938.33 BOARD APPROVED 5/7/2026 **********	8,644.96	8,644.96
2	1	CO	CHANGE ORDER #6, INCREASE BY $21,110.12 FOR A REVISED TOTAL OF $2,321,280.61 AS PER REQ R0003312. TO FACILITATE ITEMS NOT INCLUDED IN THE ORIGINAL DESIGN AND SCOPE OF THE CONTRACT THIS CHANGE ORDER BRINGS THE TOTAL NOT TO EXCEED AMOUNTOF THIS CONTRACT TO $3,605,293.37 BOARD APPROVED 3/5/2026 **********	21,110.12	21,110.12
3	1	CO	CHANGE ORDER #5, INCREASE BY $13,421.01 FOR A REVISED TOTAL OF $2,300,170.49 AS PER REQ R0002686 TO FACILITATE ITEMS NOT INCLUDED IN THE ORIGINAL DESIGN	13,421.01	13,421.01

Vendor Instructions:

1. **Show purchase order number on all invoices, shipping papers and correspondence.**
2. **Mail invoice in duplicate Attn: Accounts Payable, at the above address.**
3. **Packing slip must accompany each delivery showing purchase order, catalog number, serial number and description.**
4. **No changes without written authorization from purchasing.**
5. **If freight charges are applicable, prepay and add to invoice. No C.O.D. charges permitted.**
6. **All vendors/manufacturers representatives must send manufacturers safety data sheet (OSHA Form 20 or equivalent) with shipment when applicable.**

Contract Number
2425-003

SUB TOTAL	$ 2,329,925.57
SALES TAX	$ 0.00
SHIPPING	$ 0.00
TOTAL	$ 2,329,925.57

BURBANK UNIFIED SCHOOL DISTRICT

Approved By:

Peter Knapik

VENDOR COPY

PURCHASE ORDER

BURBANK UNIFIED SCHOOL DISTRICT

1900 WEST OLIVE AVE, BURBANK, CA 91506-2460
Phone: (818) 729-4400 Fax: (818) 729-4534

PURCHASE ORDER NO.
25002346
Show this number on invoices, packages and correspondence.

HART DESIGN BUILD, INC.

Vendor# 405477

VENDOR

HART DESIGN BUILD, INC.
3449 ANGELUS AVE
GLENDALE, CA 91208

Phone: (818) 482-5241 **Fax:**

SHIP TO

BURBANK UNIFIED SCHOOL DISTRICT
BURBANK HIGH SCHOOL
902 N. THIRD ST.
BURBANK, CA 91502-1091

For: FACILITIES SERVICES
COZAKOS/MAXWELL

PO Date: 08/28/2025 **Requested Delivery:** 06/30/2026 **Buyer Name:** David Gerharter **Req#** DAVID G2346

ITEM NO.	QTY ORDERED	UNIT OF ISSUE	DESCRIPTION	UNIT PRICE	AMOUNT
1	1	CO	CHANGE ORDER #7, INCREASE BY $8,644.96 FOR A REVISED TOTAL OF $2,329,925.57 AS PER REQ R0003312. TO FACILITATE ITEMS NOT INCLUDED IN THE ORIGINAL DESIGN AND SCOPE OF THE CONTRACT THIS CHANGE ORDER BRINGS THE TOTAL NOT TO EXCEED AMOUNTOF THIS CONTRACT TO $3,613,938.33 BOARD APPROVED 5/7/2026 **********	8,644.96	8,644.96
2	1	CO	CHANGE ORDER #6, INCREASE BY $21,110.12 FOR A REVISED TOTAL OF $2,321,280.61 AS PER REQ R0003312. TO FACILITATE ITEMS NOT INCLUDED IN THE ORIGINAL DESIGN AND SCOPE OF THE CONTRACT THIS CHANGE ORDER BRINGS THE TOTAL NOT TO EXCEED AMOUNTOF THIS CONTRACT TO $3,605,293.37 BOARD APPROVED 3/5/2026 **********	21,110.12	21,110.12
3	1	CO	CHANGE ORDER #5, INCREASE BY $13,421.01 FOR A REVISED TOTAL OF $2,300,170.49 AS PER REQ R0002686 TO FACILITATE ITEMS NOT INCLUDED IN THE ORIGINAL DESIGN	13,421.01	13,421.01

ACCOUNT NUMBER	AMOUNT
400-90329-0-00000-85000-6250-431-0000-0000	$2,329,925.57

Contract Number
2425-003
Public Works

SUB TOTAL	$ 2,329,925.57
SALES TAX	$ 0.00
SHIPPING	$ 0.00
TOTAL	$ 2,329,925.57

(A)	SHIPMENT	DATE
(B)	SHIPMENT	DATE
(C)	SHIPMENT	DATE
(D)	SHIPMENT	DATE
(E)	SHIPMENT	DATE

BURBANK UNIFIED SCHOOL DISTRICT

Approved By:

PURCHASING COPY

HART DESIGN BUILD, INC.

PURCHASE ORDER

BURBANK UNIFIED SCHOOL DISTRICT

1900 WEST OLIVE AVE, BURBANK, CA 91506-2460
Phone: (818) 729-4400 Fax: (818) 729-4534

PURCHASE ORDER NO.
26000054
Show this number on invoices, packages and correspondence.

VENDOR

AMAZON CAPITAL SERVICES
PO BOX 035184
SEATTLE, WA 98124-5184

Phone: (206) 435-3958 **Fax:**

SHIP TO

BURBANK UNIFIED SCHOOL DISTRICT
TECHNOLOGY SERVICES
510 S. SHELTON ST.
BURBANK, CA 91506-2818

For: TECHNOLOGY SERVICES
L. MOYA/Technology Dept

PO Date: 06/02/2025 **Deliver By:** 07/01/2025 **Buyer Name:** Maro Bojolyan

ITEM NO.	QTY ORDERED	UNIT OF ISSUE	DESCRIPTION	UNIT PRICE	AMOUNT
1	1	CO	CHANGE ORDER #1: INCREASE P.O. # 260000254 BY $1,500.00 FOR A REVISED TOTAL OF $5,000.00 DUE TO THE NEED FOR MORE ORDERS FOR TECH ITEMS/SUPPLIES, AS PER R0003831. ********** >>> 2025 - 2026 BLANKET ORDER <<< BLANKET ORDER TO COVER COMPUTER PARTS AND SUPPLIES TO BE PURCHASED ON AN AS-NEEDED BASIS FOR TECHNOLOGY SERVICES (**SURCHARGE** THESE ITEMS ARE PURCHASED FOR USE AT THE SITES AND WILL STAY AT THE SITE) EFFECTIVE JULY 1, 2025, THROUGH JUNE 30, 2026. AUTHORIZED PERSONNEL ON AMAZON BUSINESS "TECHNOLOGY SERVICES" ACCOUNT: PAUL LEPATAN LOURDES MOYA NOT TO EXCEED: $3,500.00 INCLUDING TAX & SHIPPING ALL SHIPMENTS CAN ONLY BE SENT TO: LOURDES MOYA, BUSD TECHNOLOGY SERVICES 510 S SHELTON ST, BURBANK CA 91506	1,500.00 3,500.00	1,500.00 3,500.00
2	1	LOT			

Vendor Instructions:

1. **Show purchase order number on all invoices, shipping papers and correspondence.**
2. **Mail invoice in duplicate Attn: Accounts Payable, at the above address.**
3. **Packing slip must accompany each delivery showing purchase order, catalog number, serial number and description.**
4. **No changes without written authorization from purchasing.**
5. **If freight charges are applicable, prepay and add to invoice. No C.O.D. charges permitted.**
6. **All vendors/manufacturers representatives must send manufacturers safety data sheet (OSHA Form 20 or equivalent) with shipment when applicable.**

SUB TOTAL	$ 5,000.00
SALES TAX	$ 0.00
SHIPPING	$ 0.00
TOTAL	$ 5,000.00

BURBANK UNIFIED SCHOOL DISTRICT

Approved By:

Peter Knapik

VENDOR COPY

PURCHASE ORDER

BURBANK UNIFIED SCHOOL DISTRICT

1900 WEST OLIVE AVE, BURBANK, CA 91506-2460
Phone: (818) 729-4400 Fax: (818) 729-4534

PURCHASE ORDER NO.
26000187
Show this number on invoices, packages and correspondence.

VENDOR

AMAZON CAPITAL SERVICES
PO BOX 035184
SEATTLE, WA 98124-5184

Phone: (206) 435-3958 **Fax:**

SHIP TO

BURBANK UNIFIED SCHOOL DISTRICT
PROVIDENCIA ELEMENTARY
1919 N. ONTARIO ST.
BURBANK, CA 91505-1231

For: PROVIDENCIA ELEMENTARY
P. REINOSO/GEN FUND SCHOOL MATERIALS

PO Date: 06/04/2025 **Deliver By:** 07/01/2025 **Buyer Name:** Maro Bojolyan

ITEM NO.	QTY ORDERED	UNIT OF ISSUE	DESCRIPTION	UNIT PRICE	AMOUNT
1	1	CO	CHANGE ORDER #4: INCREASE P.O. # 26000187 BY $1,500.00 FOR A REVISED TOTAL OF $6,000.00 DUE TO NEED TO ORDER MORE PRODUCTS, AS PER R0003977. ********** CHANGE ORDER #3: INCREASE P.O. # 26000187 BY $1,000.00 FOR A REVISED TOTAL OF $ 2,500.00 DUE TO NEW ORDERS, AS PER R0003736.	1,500.00	1,500.00
2	1	CO	********** CHANGE ORDER #2: INCREASE BY $1,000.00 FOR A REVISED TOTAL OF $3,500.00 DUE TO NEED TO ENTER ADDITIONAL ORDERS AS PER R0002444.	1,000.00	1,000.00
3	1	CO	********** CHANGE ORDER #1: INCREASE BY $1000.00 FOR A REVISED TOTAL OF $2,500.00 DUE TO MORE PURCHASES NEEDED AS PER R0001907.	1,000.00	1,000.00
4	1	CO	********** >>> 2025 - 2026 BLANKET ORDER <<< BLANKET ORDER TO COVER THE COST OF SUPPLIES AND MATERIALS, NOT EQUIPMENT, TO BE ORDERED ONLINE ON AN "AS NEEDED" BASIS, EFFECTIVE 7/1/2025 THROUGH 6/30/2026. TOTAL AMOUNT OF THIS ORDER IS NOT TO EXCEED $1500 (INCLUDING TAX & SHIPPING)	1,500.00	1,500.00
5	1	LOT			

Vendor Instructions:

1. **Show purchase order number on all invoices, shipping papers and correspondence.**
2. **Mail invoice in duplicate Attn: Accounts Payable, at the above address.**
3. **Packing slip must accompany each delivery showing purchase order, catalog number, serial number and description.**
4. **No changes without written authorization from purchasing.**
5. **If freight charges are applicable, prepay and add to invoice. No C.O.D. charges permitted.**
6. **All vendors/manufacturers representatives must send manufacturers safety data sheet (OSHA Form 20 or equivalent) with shipment when applicable.**

SUB TOTAL	$ 6,000.00
SALES TAX	$ 0.00
SHIPPING	$ 0.00
TOTAL	$ 6,000.00

BURBANK UNIFIED SCHOOL DISTRICT

Approved By:

Peter Knapik

VENDOR COPY

PURCHASE ORDER

BURBANK UNIFIED SCHOOL DISTRICT

1900 WEST OLIVE AVE, BURBANK, CA 91506-2460
Phone: (818) 729-4400 Fax: (818) 729-4534

PURCHASE ORDER NO.
26000188
Show this number on invoices, packages and correspondence.

VENDOR

SOUTHWEST SCHOOL & OFFICE SUPPLY
805 N BARRINGTON AVE
ONTARIO,

Phone: (800) 227-7159 **Fax:** (909) 980-7159

SHIP TO

BURBANK UNIFIED SCHOOL DISTRICT
PROVIDENCIA ELEMENTARY
1919 N. ONTARIO ST.
BURBANK, CA 91505-1231

For: PROVIDENCIA ELEMENTARY
P. REINOSO/GEN FUND SCHOOL MATERIALS

PO Date: 06/04/2025 **Deliver By:** 04/21/2025 **Buyer Name:** Maro Bojolyan

ITEM NO.	QTY ORDERED	UNIT OF ISSUE	DESCRIPTION	UNIT PRICE	AMOUNT
1	1	CO	CHANGE ORDER #2: INCREASE P.O. # 26000188 BY $1,000.00 FOR A REVISED TOTAL OF $3,500.00 DUE TO NEED TO MAKE MORE PURCHSAES, AS PER R0003894. ********** CHANGE ORDER #1: INCREASE BY $1000.00 FOR A REVISED TOTAL OF $2500.00 DUE TO THE NEED TO ORDER MORE SUPPLIES, AS PER R0002552. **********	1,000.00	1,000.00
2	1	CO	CHANGE ORDER #1: INCREASE BY $1000.00 FOR A REVISED TOTAL OF $2500.00 DUE TO THE NEED TO ORDER MORE SUPPLIES, AS PER R0002552. **********	1,000.00	1,000.00
3	1	LOT	>>> 2025 - 2026 BLANKET ORDER <<< BLANKET ORDER TO COVER THE COST OF SUPPLIES AND MATERIALS, NOT EQUIPMENT, TO BE ORDERED ONLINE ON AN "AS NEEDED" BASIS, EFFECTIVE 7/1/2025 THROUGH 6/30/2026. TOTAL AMOUNT OF THIS ORDER IS NOT TO EXCEED $1500 (INCLUDING TAX & SHIPPING) ALL ORDERS TO BE DELIVERED, MONDAY-FRIDAY, 8:00 AM TO 4:00 PM, TO: (SITE) ATTN: (NAME) (ADDRESS) BURBANK, CA 915__ NAME@burbankusd.org	1,500.00	1,500.00

Vendor Instructions:

1. **Show purchase order number on all invoices, shipping papers and correspondence.**
2. **Mail invoice in duplicate Attn: Accounts Payable, at the above address.**
3. **Packing slip must accompany each delivery showing purchase order, catalog number, serial number and description.**
4. **No changes without written authorization from purchasing.**
5. **If freight charges are applicable, prepay and add to invoice. No C.O.D. charges permitted.**
6. **All vendors/manufacturers representatives must send manufacturers safety data sheet (OSHA Form 20 or equivalent) with shipment when applicable.**

SUB TOTAL	$ 3,500.00
SALES TAX	$ 0.00
SHIPPING	$ 0.00
TOTAL	$ 3,500.00

BURBANK UNIFIED SCHOOL DISTRICT

Approved By:

Peter Knapik

VENDOR COPY

PURCHASE ORDER

BURBANK UNIFIED SCHOOL DISTRICT

1900 WEST OLIVE AVE, BURBANK, CA 91506-2460
Phone: (818) 729-4400 Fax: (818) 729-4534

PURCHASE ORDER NO.
26000196
Show this number on invoices, packages and correspondence.

VENDOR

MNSON WESTERN, LLC
WESTERN PSYCHOLOGICAL SERVICES
625 ALASKA AVE
TORRANCE, CA 90503-5124

Phone: (800) 648-8857 **Fax:** (424) 201-6950

SHIP TO

BURBANK UNIFIED SCHOOL DISTRICT
SPECIAL EDUCATION
1900 WEST OLIVE AVE.
BURBANK, CA 91506-2460

For: SPECIAL EDUCATION
K. DEVREIS/SPED/WPS/PSYCH.BLANKET/NICHOLS

PO Date: 06/05/2025 **Deliver By:** 07/01/2025 **Buyer Name:** Maro Bojolyan

ITEM NO.	QTY ORDERED	UNIT OF ISSUE	DESCRIPTION	UNIT PRICE	AMOUNT
1	1	CO	CHANGE ORDER #1: INCREASE P.O. # 26000196 BY $1,000.00 FOR A REVISED TOTAL OF $6,000.00 DUE TO COVERING PAST DUE INVOICES AND TO PLACE NEW ORDERS, AS PER R0003984.	1,000.00	1,000.00
			**********		
2	1	LOT	>>> 2025 - 2026 BLANKET ORDER <<< BLANKET ORDER TO COVER THE COST OF TESTING PROTOCLOLS FOR OUR PROVIDERS. PERSONS AUTHORIZED TO ORDER THIS PURCHASE ORDER ARE: KELLIE DEVRIES SANDRA SHEARER EFFECTIVE JULY 1, 2025, THROUGH JUNE 30, 2026 NOT TO EXCEED: $5,000.00 INCLUDING TAXES AND SHIPPING *** SPECIAL INSTRUCTIONS *** * VENDOR: FOR PROMPT PAYMENT, BILL TO: APINVOICES@BURBANKUSD.ORG * PLEASE NOTE: WE ARE NO LONGER ACCEPTING HARD COPY INVOICES SENT BY MAIL * VENDOR NOTE: PLEASE SHIP DIRECTLY TO OUR SITE AS INDICATED. PLEASE BE SURE TO INCLUDE OUR PURCHASE	5,000.00	5,000.00

Vendor Instructions:

1. **Show purchase order number on all invoices, shipping papers and correspondence.**
2. **Mail invoice in duplicate Attn: Accounts Payable, at the above address.**
3. **Packing slip must accompany each delivery showing purchase order, catalog number, serial number and description.**
4. **No changes without written authorization from purchasing.**
5. **If freight charges are applicable, prepay and add to invoice. No C.O.D. charges permitted.**
6. **All vendors/manufacturers representatives must send manufacturers safety data sheet (OSHA Form 20 or equivalent) with shipment when applicable.**

SUB TOTAL	$ 6,000.00
SALES TAX	$ 0.00
SHIPPING	$ 0.00
TOTAL	$ 6,000.00

BURBANK UNIFIED SCHOOL DISTRICT

Approved By:

Peter Knapik

VENDOR COPY

PURCHASE ORDER

BURBANK UNIFIED SCHOOL DISTRICT

1900 WEST OLIVE AVE, BURBANK, CA 91506-2460
Phone: (818) 729-4400 Fax: (818) 729-4534

PURCHASE ORDER NO.
26000196
Show this number on invoices, packages and correspondence.

VENDOR

MNSON WESTERN, LLC
WESTERN PSYCHOLOGICAL SERVICES
625 ALASKA AVE
TORRANCE, CA 90503-5124

Phone: (800) 648-8857 **Fax:** (424) 201-6950

SHIP TO

BURBANK UNIFIED SCHOOL DISTRICT
SPECIAL EDUCATION
1900 WEST OLIVE AVE.
BURBANK, CA 91506-2460

For: SPECIAL EDUCATION
K. DEVREIS/SPED/WPS/PSYCH.BLANKET/NICHOLS

PO Date: 06/05/2025 **Deliver By:** 07/01/2025 **Buyer Name:** Maro Bojolyan

ITEM NO.	QTY ORDERED	UNIT OF ISSUE	DESCRIPTION	UNIT PRICE	AMOUNT
1	1	CO	CHANGE ORDER #2: INCREASE P.O. # 26000196 BY $2,000.00 FOR A REVISED TOTAL OF $8,000.00 DUE TO COVERING OUTSTANDING ODERS AND INVOICES, AS PER R0004018. **********	2,000.00	2,000.00
2	1	CO	CHANGE ORDER #1: INCREASE P.O. # 26000196 BY $1,000.00 FOR A REVISED TOTAL OF $6,000.00 DUE TO COVERING PAST DUE INVOICES AND TO PLACE NEW ORDERS, AS PER R0003984. **********	1,000.00	1,000.00
3	1	LOT	>>> 2025 - 2026 BLANKET ORDER <<< BLANKET ORDER TO COVER THE COST OF TESTING PROTOCLOLS FOR OUR PROVIDERS. PERSONS AUTHORIZED TO ORDER THIS PURCHASE ORDER ARE: KELLIE DEVRIES SANDRA SHEARER EFFECTIVE JULY 1, 2025, THROUGH JUNE 30, 2026 NOT TO EXCEED: $5,000.00 INCLUDING TAXES AND SHIPPING *** SPECIAL INSTRUCTIONS *** * VENDOR: FOR PROMPT PAYMENT, BILL TO: APINVOICES@BURBANKUSD.ORG	5,000.00	5,000.00

Vendor Instructions:

1. **Show purchase order number on all invoices, shipping papers and correspondence.**
2. **Mail invoice in duplicate Attn: Accounts Payable, at the above address.**
3. **Packing slip must accompany each delivery showing purchase order, catalog number, serial number and description.**
4. **No changes without written authorization from purchasing.**
5. **If freight charges are applicable, prepay and add to invoice. No C.O.D. charges permitted.**
6. **All vendors/manufacturers representatives must send manufacturers safety data sheet (OSHA Form 20 or equivalent) with shipment when applicable.**

SUB TOTAL	$ 8,000.00
SALES TAX	$ 0.00
SHIPPING	$ 0.00
TOTAL	$ 8,000.00

BURBANK UNIFIED SCHOOL DISTRICT

Approved By:

Peter Knapik

VENDOR COPY

PURCHASE ORDER

BURBANK UNIFIED SCHOOL DISTRICT

1900 WEST OLIVE AVE, BURBANK, CA 91506-2460
Phone: (818) 729-4400 Fax: (818) 729-4534

PURCHASE ORDER NO.
26000245
Show this number on invoices, packages and correspondence.

VENDOR

AMAZON CAPITAL SERVICES
PO BOX 035184
SEATTLE, WA 98124-5184

Phone: (206) 435-3958 **Fax:**

SHIP TO

BURBANK UNIFIED SCHOOL DISTRICT
STEVENSON ELEMENTARY
3333 OAK ST.
BURBANK, CA 91505-3514

For: STEVENSON ELEMENTARY
C. SALAS/AMAZON BLANKET

PO Date: 06/12/2025 **Deliver By:** 07/01/2025 **Buyer Name:** Maro Bojolyan

ITEM NO.	QTY ORDERED	UNIT OF ISSUE	DESCRIPTION	UNIT PRICE	AMOUNT
1	1	CO	CHANGE ORDER #2: INCREASE P.O. # 26000245 BY $250.00 FOR A REVISED TOTAL OF $6250.00 DUE TO INCREASE BUDGET FOR FINAL ORDERS, AS PER R0003745. ********** CHANGE ORDER #1: INCRASE BY $3000.00 FOR A REVISED TOTAL OF $6000.00 DUE TO NEEDING MORE FUNDS IN OUR AMAZON BLANKET AND NOT IN SOUTHWEST. ********** >>> 2025 - 2026 BLANKET ORDER <<< BLANKET ORDER TO COVER THE COST OF SUPPLIES AND MATERIALS, NOT EQUIPMENT, TO BE ORDERED ONLINE ON AN "AS NEEDED" BASIS, EFFECTIVE 7/1/2025 THROUGH 6/30/2026. TOTAL AMOUNT OF THIS ORDER IS NOT TO EXCEED $3000.00 (INCLUDING TAX & SHIPPING) ALL ORDERS TO BE DELIVERED, MONDAY-FRIDAY, 8:00 AM TO 4:00 PM, TO R.L.STEVENSON ATTN: CRYSTAL SALAS 3333 W. OAK ST. BURBANK, CA 91505 INSTRUCTIONS TO AMAZON USER:	250.00	250.00
2	1	CO		3,000.00	3,000.00
3	1	LOT		3,000.00	3,000.00

Vendor Instructions:

1. **Show purchase order number on all invoices, shipping papers and correspondence.**
2. **Mail invoice in duplicate Attn: Accounts Payable, at the above address.**
3. **Packing slip must accompany each delivery showing purchase order, catalog number, serial number and description.**
4. **No changes without written authorization from purchasing.**
5. **If freight charges are applicable, prepay and add to invoice. No C.O.D. charges permitted.**
6. **All vendors/manufacturers representatives must send manufacturers safety data sheet (OSHA Form 20 or equivalent) with shipment when applicable.**

SUB TOTAL	$ 6,250.00
SALES TAX	$ 0.00
SHIPPING	$ 0.00
TOTAL	$ 6,250.00

BURBANK UNIFIED SCHOOL DISTRICT

Approved By:

Peter Knapik

VENDOR COPY

PURCHASE ORDER

BURBANK UNIFIED SCHOOL DISTRICT

1900 WEST OLIVE AVE, BURBANK, CA 91506-2460
Phone: (818) 729-4400 Fax: (818) 729-4534

PURCHASE ORDER NO.
26000259
Show this number on invoices, packages and correspondence.

VENDOR

CITY OF BURBANK
PO BOX 7145
BURBANK, CA 91510-7142

Phone: (818) 238-5500 **Fax:**

SHIP TO

BURBANK UNIFIED SCHOOL DISTRICT
FACILITIES SERVICES
510 S. SHELTON STREET
BURBANK, CA 91506-2818

For: FACILITIES SERVICES
S.HOY/DENNIS MAXWELL

PO Date: 06/12/2025 **Deliver By:** 07/01/2025 **Buyer Name:** Maro Bojolyan

ITEM NO.	QTY ORDERED	UNIT OF ISSUE	DESCRIPTION	UNIT PRICE	AMOUNT
1	1	CO	CHANGE ORDER #1: INCREASE P.O. #26000259 BY $5,000.00 FOR A REVISED TOTAL OF $20,000.00 DUE TO PENDING INVOICES STILL NEEDING TO BE PAID THROUGH JUNE, AS PER R0003981. **********	5,000.00	5,000.00
2	1	EA	>>> 2025 - 2026 BLANKET ORDER <<< BLANKET ORDER TO COVER THE COST OF USE OF LANDFILL FACILITIES ON AN "AS NEEDED" BASIS FROM JULY 1, 2025 THROUGH JUNE 30, 2026. NOT TO EXCEED $15,000 REFERENCE THE P.O. NUMBER ON ALL RECEIPTS AND INVOICES *** SPECIAL INSTRUCTIONS *** * VENDOR: FOR PROMPT PAYMENT, BILL TO: APINVOICES@BURBANKUSD.ORG * PLEASE NOTE: WE ARE NO LONGER ACCEPTING HARD COPY INVOICES SENT BY MAIL * MATERIAL SAFETY DATA SHEETS (MSDS) ARE TO BE PROVIDED AT TIME OF PICKUP OR DELIVERY OF ITEMS SUPPLIED ON THIS PURCHASE ORDER THAT MAY REQUIRE CAUTION IN HANDLING OR USE BY EITHER CHILDREN OR ADULTS. * EQUIPMENT ITEMS WITH A VALUE OF $500.00 OR MORE, INCLUDING TAX AND SHIPPING, MAY NOT BE PURCHASED ON	15,000.00	15,000.00

Vendor Instructions:

1. **Show purchase order number on all invoices, shipping papers and correspondence.**
2. **Mail invoice in duplicate Attn: Accounts Payable, at the above address.**
3. **Packing slip must accompany each delivery showing purchase order, catalog number, serial number and description.**
4. **No changes without written authorization from purchasing.**
5. **If freight charges are applicable, prepay and add to invoice. No C.O.D. charges permitted.**
6. **All vendors/manufacturers representatives must send manufacturers safety data sheet (OSHA Form 20 or equivalent) with shipment when applicable.**

SUB TOTAL	$ 20,000.00
SALES TAX	$ 0.00
SHIPPING	$ 0.00
TOTAL	$ 20,000.00

BURBANK UNIFIED SCHOOL DISTRICT

Approved By:

Peter Knapik

VENDOR COPY

PURCHASE ORDER

BURBANK UNIFIED SCHOOL DISTRICT

1900 WEST OLIVE AVE, BURBANK, CA 91506-2460
Phone: (818) 729-4400 Fax: (818) 729-4534

PURCHASE ORDER NO.
26000274
Show this number on invoices, packages and correspondence.

VENDOR

JOHNSTONE SUPPLY
1250 GRAVES AVE.
OXNARD, CA 93030

Phone: (818) 768-8890 **Fax:** (818) 768-3072

SHIP TO

BURBANK UNIFIED SCHOOL DISTRICT
FACILITIES SERVICES
510 S. SHELTON STREET
BURBANK, CA 91506-2818

For: FACILITIES SERVICES
SERGIO RODRIGUEZ

PO Date: 06/16/2025 **Deliver By:** 07/01/2025 **Buyer Name:** Maro Bojolyan

ITEM NO.	QTY ORDERED	UNIT OF ISSUE	DESCRIPTION	UNIT PRICE	AMOUNT
1	1	CO	CHANGE ORDER #1: INCREASE P.O. # 26000274 BY $5,000.00 FOR A REVISED TOTAL OF $25,000.00 DUE TO BLANKET IS OUT OF FUNDS TO PAY PENDING BILLS, AS PER R0003940. **********	5,000.00	5,000.00
2	1	EA	>>> 2025 - 2026 BLANKET ORDER <<< BLANKET ORDER TO COVER THE COST OF SUPPLIES TO BE PURCHASED BY FACILITIES SERVICES ON AN "AS NEEDED" BASIS FROM JULY 1, 2025 THROUGH JUNE 30, 2026. NOT TO EXCEED $5,000 INCLUDING TAXES AND SHIPPING REFERENCE THE P.O. NUMBER ON ALL RECEIPTS, PACKING LISTS AND INVOICES. *** SPECIAL INSTRUCTIONS *** * VENDOR: FOR PROMPT PAYMENT, BILL TO: APINVOICES@BURBANKUSD.ORG * PLEASE NOTE: WE ARE NO LONGER ACCEPTING HARD COPY INVOICES SENT BY MAIL * MATERIAL SAFETY DATA SHEETS (MSDS) ARE TO BE PROVIDED AT TIME OF PICKUP OR DELIVERY OF ITEMS SUPPLIED ON THIS PURCHASE ORDER THAT MAY REQUIRE CAUTION IN HANDLING OR USE BY EITHER CHILDREN OR ADULTS.	20,000.00	20,000.00

Vendor Instructions:

1. **Show purchase order number on all invoices, shipping papers and correspondence.**
2. **Mail invoice in duplicate Attn: Accounts Payable, at the above address.**
3. **Packing slip must accompany each delivery showing purchase order, catalog number, serial number and description.**
4. **No changes without written authorization from purchasing.**
5. **If freight charges are applicable, prepay and add to invoice. No C.O.D. charges permitted.**
6. **All vendors/manufacturers representatives must send manufacturers safety data sheet (OSHA Form 20 or equivalent) with shipment when applicable.**

SUB TOTAL	$ 25,000.00
SALES TAX	$ 0.00
SHIPPING	$ 0.00
TOTAL	$ 25,000.00

BURBANK UNIFIED SCHOOL DISTRICT

Approved By:

Peter Knapik

VENDOR COPY

PURCHASE ORDER

BURBANK UNIFIED SCHOOL DISTRICT

1900 WEST OLIVE AVE, BURBANK, CA 91506-2460
Phone: (818) 729-4400 Fax: (818) 729-4534

PURCHASE ORDER NO.
26000294
Show this number on invoices, packages and correspondence.

GRAYBAR

Vendor# 000766

VENDOR

GRAYBAR
16301 RAYMER ST
VAN NUYS, CA 91406-1212

Phone: (818) 779-4820 **Fax:** (818) 782-4014

SHIP TO

BURBANK UNIFIED SCHOOL DISTRICT
TECHNOLOGY SERVICES
510 S. SHELTON ST.
BURBANK, CA 91506-2818

For: TECHNOLOGY SERVICES
MOYA/Technology Dept

PO Date: 06/16/2025 **Requested Delivery:** 07/01/2025 **Buyer Name:** Terri Harvey **Req#** R0000100

ITEM NO.	QTY ORDERED	UNIT OF ISSUE	DESCRIPTION	UNIT PRICE	AMOUNT
1	1	CO	CHANGE ORDER #1: INCREASE BY $500.00 FOR A REVISED TOTAL OF $2,000.00 AS PER REQ R0003838 INCREASE TO PURCHASE ADDITIONAL ITEMS TO DELIVER PRIOR TO JUNE 30, 2026 **********	500.00	500.00
2	1	YR	>>> 2025 - 2026 BLANKET ORDER <<< BLANKET ORDER TO COVER THE COST OF MATERIALS AND SUPPLIES FOR TECHNOLOGY SERVICES TO BE ORDERED ON AN AS NEEDED BASIS FROM JULY 1, 2025 THROUGH JUNE 30, 2026 NOT TO EXCEED .....$1,500 INCLUDING TAX AND SHIPPING AUTHORIZED PERSONNEL TO MAKE PURCHASES ON THIS ACCOUNT ARE: *PAUL LEPATAN *FRED SALEH REFERENCE ACCOUNT #311461 *** SPECIAL INSTRUCTIONS *** * VENDOR: FOR PROMPT PAYMENT, BILL TO: APINVOICES@BURBANKUSD.ORG	1,500.00	1,500.00

ACCOUNT NUMBER	AMOUNT
010-00000-0-00000-77000-4310-773-0000-0000	$2,000.00

SUB TOTAL	$ 2,000.00
SALES TAX	$ 0.00
SHIPPING	$ 0.00
TOTAL	$ 2,000.00

(A)	SHIPMENT	DATE
(B)	SHIPMENT	DATE
(C)	SHIPMENT	DATE
(D)	SHIPMENT	DATE
(E)	SHIPMENT	DATE

BURBANK UNIFIED SCHOOL DISTRICT

Approved By:

PURCHASING COPY

PURCHASE ORDER

BURBANK UNIFIED SCHOOL DISTRICT

1900 WEST OLIVE AVE, BURBANK, CA 91506-2460
Phone: (818) 729-4400 Fax: (818) 729-4534

PURCHASE ORDER NO.
26000297
Show this number on invoices, packages and correspondence.

OFFICE DEPOT/ BUSINESS SERVICES

Vendor# 000587

VENDOR

OFFICE DEPOT/ BUSINESS SERVICES DIVISION
PO BOX 29248
PHOENIX, AZ 85038-9248

Phone: (888) 263-3423 **Fax:** (888) 251-4058

SHIP TO

BURBANK UNIFIED SCHOOL DISTRICT
LUTHER BURBANK MIDDLE SCHOOL
3700 W. JEFFRIES AVE.
BURBANK, CA 91505-1896

For: LUTHER BURBANK MIDDLE SCHOOL
Salvador Jimenez

PO Date: 06/16/2025 **Requested Delivery:** 07/01/2024 **Buyer Name:** Terri Harvey **Req#** R0000017

ITEM NO.	QTY ORDERED	UNIT OF ISSUE	DESCRIPTION	UNIT PRICE	AMOUNT
1	1	CO	CHANGE ORDER #21 INCREASE BY $2,000.00 FOR A REVISED TOTAL OF $12,000.00 AS PER REQ R0003852 INCREASE DUE TO ADDITIONAL ITEMS ORDERED TO RECEVIE THROUGH JUNE 30, 2026 **********	2,000.00	2,000.00
2	1	LOT	>>> 2025 - 2026 BLANKET ORDER <<< BLANKET ORDER TO COVER THE COST OF SUPPLIES AND MATERIALS, NOT EQUIPMENT, TO BE ORDERED ONLINE ON AN "AS NEEDED" BASIS, EFFECTIVE 7/1/2025 THROUGH 6/30/2026. TOTAL AMOUNT OF THIS ORDER IS NOT TO EXCEED $10000.00 (INCLUDING TAX & SHIPPING) ALL ORDERS TO BE DELIVERED, MONDAY-FRIDAY, 8:00 AM TO 4:00 PM, TO: LUTHER BURBANK MIDDLE SCHOOL ATTN: SAL JIMENEZ 3700 W. JEFFRIES AVE BURBANK, CA 91505 SALVADORJIMENEZ@burbankusd.org SITE TO ADHERE TO DISTRICT GUIDELINES FOR MINIMUM ORDER OF $50 AND EVERY OTHER WEEK DELIVERY. SIGNED AND DATED PACKING LISTS TO BE FORWARDED TO ACCOUNTS	10,000.00	10,000.00

ACCOUNT NUMBER	AMOUNT
010-00000-0-11100-10000-4310-320-0000-0000	$12,000.00

(A)	SHIPMENT	DATE
(B)	SHIPMENT	DATE
(C)	SHIPMENT	DATE
(D)	SHIPMENT	DATE
(E)	SHIPMENT	DATE

SUB TOTAL	$ 12,000.00
SALES TAX	$ 0.00
SHIPPING	$ 0.00
TOTAL	$ 12,000.00

BURBANK UNIFIED SCHOOL DISTRICT

Approved By:

PURCHASING COPY

PURCHASE ORDER

BURBANK UNIFIED SCHOOL DISTRICT

1900 WEST OLIVE AVE, BURBANK, CA 91506-2460
Phone: (818) 729-4400 Fax: (818) 729-4534

PURCHASE ORDER NO.
26000305
Show this number on invoices, packages and correspondence.

VENDOR

OFFICE DEPOT/ BUSINESS SERVICES DIVISION
PO BOX 29248
PHOENIX, AZ 85038-9248

Phone: (888) 263-3423 **Fax:** (888) 251-4058

SHIP TO

BURBANK UNIFIED SCHOOL DISTRICT
DISNEY ELEMENTARY
1220 W. ORANGE GROVE AVE.
BURBANK, CA 91506-2016

For: DISNEY ELEMENTARY
BROOKE SCHWARTZ/DISNEY

PO Date: 06/17/2025 **Deliver By:** 07/01/2025 **Buyer Name:** Terri Harvey

ITEM NO.	QTY ORDERED	UNIT OF ISSUE	DESCRIPTION	UNIT PRICE	AMOUNT
1	1	CO	CHANGE ORDER #2: INCREASE BY $1,500.00 FOR A REVISED TOTAL OF $5,000.00 AS PER REQ R0003832 **********	1,500.00	1,500.00
2	1	C/O	CHANGE ORDER #1: INCREASE BY $1,500.00 FOR A REVISED TOTAL OF $3,500.00 AS PER REQ R0003109 **********	1,500.00	1,500.00
3	1	LOT	>>> 2025 - 2026 BLANKET ORDER <<< BLANKET ORDER TO COVER THE COST OF SUPPLIES AND MATERIALS, NOT EQUIPMENT, TO BE ORDERED ONLINE ON AN "AS NEEDED" BASIS, EFFECTIVE 7/1/2025 THROUGH 6/30/2026. TOTAL AMOUNT OF THIS ORDER IS NOT TO EXCEED $2000.00 (INCLUDING TAX & SHIPPING) ALL ORDERS TO BE DELIVERED, MONDAY-FRIDAY, 8:00 AM TO 4:00 PM, TO: WALT DISNEY ELEMENTARY ATTN: BROOKE SCHWARTZ 1220 W ORANGE GROVE AVE. BURBANK, CA 91506 NAME@burbankusd.org SITE TO ADHERE TO DISTRICT GUIDELINES FOR MINIMUM ORDER OF $50 AND EVERY OTHER WEEK DELIVERY. SIGNED AND	2,000.00	2,000.00

Vendor Instructions:

1. **Show purchase order number on all invoices, shipping papers and correspondence.**
2. **Mail invoice in duplicate Attn: Accounts Payable, at the above address.**
3. **Packing slip must accompany each delivery showing purchase order, catalog number, serial number and description.**
4. **No changes without written authorization from purchasing.**
5. **If freight charges are applicable, prepay and add to invoice. No C.O.D. charges permitted.**
6. **All vendors/manufacturers representatives must send manufacturers safety data sheet (OSHA Form 20 or equivalent) with shipment when applicable.**

SUB TOTAL	$ 5,000.00
SALES TAX	$ 0.00
SHIPPING	$ 0.00
TOTAL	$ 5,000.00

BURBANK UNIFIED SCHOOL DISTRICT

Approved By:

Peter Knapik

VENDOR COPY

PURCHASE ORDER

BURBANK UNIFIED SCHOOL DISTRICT

1900 WEST OLIVE AVE, BURBANK, CA 91506-2460
Phone: (818) 729-4400 Fax: (818) 729-4534

PURCHASE ORDER NO.
26000305
Show this number on invoices, packages and correspondence.

OFFICE DEPOT/ BUSINESS SERVICES

Vendor# 000587

VENDOR

OFFICE DEPOT/ BUSINESS SERVICES DIVISION
PO BOX 29248
PHOENIX, AZ 85038-9248

Phone: (888) 263-3423 **Fax:** (888) 251-4058

SHIP TO

BURBANK UNIFIED SCHOOL DISTRICT
DISNEY ELEMENTARY
1220 W. ORANGE GROVE AVE.
BURBANK, CA 91506-2016

For: DISNEY ELEMENTARY
BROOKE SCHWARTZ/DISNEY

PO Date: 06/17/2025 **Requested Delivery:** 07/01/2025 **Buyer Name:** Terri Harvey **Req#** R0000181

ITEM NO.	QTY ORDERED	UNIT OF ISSUE	DESCRIPTION	UNIT PRICE	AMOUNT
1	1	CO	CHANGE ORDER #2: INCREASE BY $1,500.00 FOR A REVISED TOTAL OF $5,000.00 AS PER REQ R0003832 **********	1,500.00	1,500.00
2	1	C/O	CHANGE ORDER #1: INCREASE BY $1,500.00 FOR A REVISED TOTAL OF $3,500.00 AS PER REQ R0003109 **********	1,500.00	1,500.00
3	1	LOT	>>> 2025 - 2026 BLANKET ORDER <<< BLANKET ORDER TO COVER THE COST OF SUPPLIES AND MATERIALS, NOT EQUIPMENT, TO BE ORDERED ONLINE ON AN "AS NEEDED" BASIS, EFFECTIVE 7/1/2025 THROUGH 6/30/2026. TOTAL AMOUNT OF THIS ORDER IS NOT TO EXCEED $2000.00 (INCLUDING TAX & SHIPPING) ALL ORDERS TO BE DELIVERED, MONDAY-FRIDAY, 8:00 AM TO 4:00 PM, TO: WALT DISNEY ELEMENTARY ATTN: BROOKE SCHWARTZ 1220 W ORANGE GROVE AVE. BURBANK, CA 91506 NAME@burbankusd.org SITE TO ADHERE TO DISTRICT GUIDELINES FOR MINIMUM ORDER OF $50 AND EVERY OTHER WEEK DELIVERY. SIGNED AND	2,000.00	2,000.00

ACCOUNT NUMBER	AMOUNT
010-00000-0-11100-10000-4310-201-0000-0000	$5,000.00

SUB TOTAL	$ 5,000.00
SALES TAX	$ 0.00
SHIPPING	$ 0.00
TOTAL	$ 5,000.00

(A)	SHIPMENT	DATE
(B)	SHIPMENT	DATE
(C)	SHIPMENT	DATE
(D)	SHIPMENT	DATE
(E)	SHIPMENT	DATE

BURBANK UNIFIED SCHOOL DISTRICT

Approved By:

PURCHASING COPY

PURCHASE ORDER

BURBANK UNIFIED SCHOOL DISTRICT

1900 WEST OLIVE AVE, BURBANK, CA 91506-2460
Phone: (818) 729-4400 Fax: (818) 729-4534

PURCHASE ORDER NO.
26000318
Show this number on invoices, packages and correspondence.

VENDOR

OFFICE DEPOT/ BUSINESS SERVICES DIVISION
PO BOX 29248
PHOENIX, AZ 85038-9248

Phone: (888) 263-3423 **Fax:** (888) 251-4058

SHIP TO

BURBANK UNIFIED SCHOOL DISTRICT
MC KINLEY ELEMENTARY
349 W. VALENCIA AVE
BURBANK, CA 91506-3309

For: MC KINLEY ELEMENTARY
MANOUKI/MCKINLEY/SCHOOL SUPPLIES

PO Date: 06/17/2025 **Deliver By:** 07/01/2025 **Buyer Name:** Terri Harvey

ITEM NO.	QTY ORDERED	UNIT OF ISSUE	DESCRIPTION	UNIT PRICE	AMOUNT
1	1	CO	CHANGE ORDER #1: INCREASE BY $1,800.00 FOR A REVISED TOTAL OF $5,800.00 AS PER REQ R0003783	1,800.00	1,800.00
			**********		
2	1	LOT	>>> 2025 - 2026 BLANKET ORDER <<< BLANKET ORDER TO COVER THE COST OF SUPPLIES AND MATERIALS, NOT EQUIPMENT, TO BE ORDERED ONLINE ON AN "AS NEEDED" BASIS, EFFECTIVE 7/1/2025 THROUGH 6/30/2026. TOTAL AMOUNT OF THIS ORDER IS NOT TO EXCEED $4,000 (INCLUDING TAX & SHIPPING) ALL ORDERS TO BE DELIVERED, MONDAY-FRIDAY, 8:00 AM TO 4:00 PM, TO: MCKINLEY ELEMENTARY SCHOOL ATTN: RENEH MANOUKI 349 WEST VALENCIA AVE BURBANK, CA 91506 RENEHMANOUKI@BURBANKUSD.ORG *** SPECIAL INSTRUCTIONS *** * VENDOR: FOR PROMPT PAYMENT, BILL TO: APINVOICES@BURBANKUSD.ORG * PLEASE NOTE: WE ARE NO LONGER ACCEPTING	4,000.00	4,000.00

Vendor Instructions:

1. **Show purchase order number on all invoices, shipping papers and correspondence.**
2. **Mail invoice in duplicate Attn: Accounts Payable, at the above address.**
3. **Packing slip must accompany each delivery showing purchase order, catalog number, serial number and description.**
4. **No changes without written authorization from purchasing.**
5. **If freight charges are applicable, prepay and add to invoice. No C.O.D. charges permitted.**
6. **All vendors/manufacturers representatives must send manufacturers safety data sheet (OSHA Form 20 or equivalent) with shipment when applicable.**

SUB TOTAL	$ 5,800.00
SALES TAX	$ 0.00
SHIPPING	$ 0.00
TOTAL	$ 5,800.00

BURBANK UNIFIED SCHOOL DISTRICT

Approved By:

Peter Knapik

VENDOR COPY

PURCHASE ORDER

BURBANK UNIFIED SCHOOL DISTRICT

1900 WEST OLIVE AVE, BURBANK, CA 91506-2460
Phone: (818) 729-4400 Fax: (818) 729-4534

PURCHASE ORDER NO.
26000318
Show this number on invoices, packages and correspondence.

OFFICE DEPOT/ BUSINESS SERVICES

Vendor# 000587

VENDOR

OFFICE DEPOT/ BUSINESS SERVICES DIVISION
PO BOX 29248
PHOENIX, AZ 85038-9248

Phone: (888) 263-3423 **Fax:** (888) 251-4058

SHIP TO

BURBANK UNIFIED SCHOOL DISTRICT
MC KINLEY ELEMENTARY
349 W. VALENCIA AVE
BURBANK, CA 91506-3309

For: MC KINLEY ELEMENTARY
MANOUKI/MCKINLEY/SCHOOL SUPPLIES

PO Date: 06/17/2025 **Requested Delivery:** 07/01/2025 **Buyer Name:** Terri Harvey **Req#** R0000335

ITEM NO.	QTY ORDERED	UNIT OF ISSUE	DESCRIPTION	UNIT PRICE	AMOUNT
1	1	CO	CHANGE ORDER #1: INCREASE BY $1,800.00 FOR A REVISED TOTAL OF $5,800.00 AS PER REQ R0003783	1,800.00	1,800.00
			**********		
2	1	LOT	>>> 2025 - 2026 BLANKET ORDER <<< BLANKET ORDER TO COVER THE COST OF SUPPLIES AND MATERIALS, NOT EQUIPMENT, TO BE ORDERED ONLINE ON AN "AS NEEDED" BASIS, EFFECTIVE 7/1/2025 THROUGH 6/30/2026. TOTAL AMOUNT OF THIS ORDER IS NOT TO EXCEED $4,000 (INCLUDING TAX & SHIPPING) ALL ORDERS TO BE DELIVERED, MONDAY-FRIDAY, 8:00 AM TO 4:00 PM, TO: MCKINLEY ELEMENTARY SCHOOL ATTN: RENEH MANOUKI 349 WEST VALENCIA AVE BURBANK, CA 91506 RENEHMANOUKI@BURBANKUSD.ORG *** SPECIAL INSTRUCTIONS *** * VENDOR: FOR PROMPT PAYMENT, BILL TO: APINVOICES@BURBANKUSD.ORG * PLEASE NOTE: WE ARE NO LONGER ACCEPTING	4,000.00	4,000.00

ACCOUNT NUMBER	AMOUNT
010-00000-0-11100-10000-4310-209-0000-0000	$5,800.00

(A)	SHIPMENT	DATE
(B)	SHIPMENT	DATE
(C)	SHIPMENT	DATE
(D)	SHIPMENT	DATE
(E)	SHIPMENT	DATE

SUB TOTAL	$ 5,800.00
SALES TAX	$ 0.00
SHIPPING	$ 0.00
TOTAL	$ 5,800.00

BURBANK UNIFIED SCHOOL DISTRICT

Approved By:

PURCHASING COPY

PURCHASE ORDER

BURBANK UNIFIED SCHOOL DISTRICT

1900 WEST OLIVE AVE, BURBANK, CA 91506-2460
Phone: (818) 729-4400 Fax: (818) 729-4534

PURCHASE ORDER NO.
26000343
Show this number on invoices, packages and correspondence.

VENDOR

FERGUSON ENTERPRISES, INC.
7651 WOODMAN AVENUE
VAN NUYS, CA 91402-6536

Phone: (909) 364-8800 **Fax:** (909) 364-8900

SHIP TO

BURBANK UNIFIED SCHOOL DISTRICT
FACILITIES SERVICES
510 S. SHELTON STREET
BURBANK, CA 91506-2818

For: FACILITIES SERVICES
S. HOY/SERGIO RODRIGUEZ

PO Date: 06/18/2025 **Deliver By:** 07/01/2025 **Buyer Name:** Maro Bojolyan

ITEM NO.	QTY ORDERED	UNIT OF ISSUE	DESCRIPTION	UNIT PRICE	AMOUNT
1	1	CO	CHANGE ORDER #1: INCREASE P.O. # 26000343 BY $10,000.00 FOR A REVISED TOTAL OF $60,000.00 DUE TO BLANKET IS OUT OF FUNDS AND BILLS ARE PENDING AND MORE REPAIRS NEED TO BE MADE BY END OF YEAR, AS PER R0003939. ********** >>> 2024 - 2025 BLANKET ORDER <<<	10,000.00	10,000.00
2	1	EA	BLANKET ORDER TO COVER THE PURCHASE OF VARIOUS IRRIGATION REPAIR SUPPLIES ON AN AS NEEDED BASIS BY FACILITIES SERVICES FROM JULY 1, 2024 THROUGH JUNE 30, 2025. NOT TO EXCEED: $50,000.00 INCLUDING TAXES AND SHIPPING REFERENCE THE P.O. NUMBER ON ALL RECEIPTS, PACKING LISTS AND INVOICES. *** SPECIAL INSTRUCTIONS *** * VENDOR: FOR PROMPT PAYMENT, BILL TO: APINVOICES@BURBANKUSD.ORG * PLEASE NOTE: WE ARE NO LONGER ACCEPTING HARD COPY INVOICES SENT BY MAIL * PLEASE SHIP DIRECTLY TO THE WAREHOUSE, AS INDICATED ON THIS ORDER, AND REFERENCE THE P.O. NUMBER ON ALL SHIPPING AND BILLING DOCUMENTS.	50,000.00	50,000.00

Vendor Instructions:

1. **Show purchase order number on all invoices, shipping papers and correspondence.**
2. **Mail invoice in duplicate Attn: Accounts Payable, at the above address.**
3. **Packing slip must accompany each delivery showing purchase order, catalog number, serial number and description.**
4. **No changes without written authorization from purchasing.**
5. **If freight charges are applicable, prepay and add to invoice. No C.O.D. charges permitted.**
6. **All vendors/manufacturers representatives must send manufacturers safety data sheet (OSHA Form 20 or equivalent) with shipment when applicable.**

SUB TOTAL	$ 60,000.00
SALES TAX	$ 0.00
SHIPPING	$ 0.00
TOTAL	$ 60,000.00

BURBANK UNIFIED SCHOOL DISTRICT

Approved By:

Peter Knapik

VENDOR COPY

PURCHASE ORDER

BURBANK UNIFIED SCHOOL DISTRICT

1900 WEST OLIVE AVE, BURBANK, CA 91506-2460
Phone: (818) 729-4400 Fax: (818) 729-4534

PURCHASE ORDER NO.
26000406
Show this number on invoices, packages and correspondence.

CANON FINANCIAL SERVICES, INC.

Vendor# 404886

VENDOR
CANON FINANCIAL SERVICES, INC.
158 GAITHER DRIVE, SUITE 200
MOUNT LAUREL, NJ 08054

Phone: (818) 630-8330 **Fax:** (818)

SHIP TO
BURBANK UNIFIED SCHOOL DISTRICT
FISCAL SERVICES
1900 WEST OLIVE AVE.
BURBANK, CA 91506-2460

For: FISCAL SERVICES
ADAMS/BUSINESS OFFICE

PO Date: 07/02/2025 **Requested Delivery:** 07/04/2025 **Buyer Name:** David Gerharter **Req#** R0000430

ITEM NO.	QTY ORDERED	UNIT OF ISSUE	DESCRIPTION	UNIT PRICE	AMOUNT
1	1	CO	CHANGE ORDER #1: INCREASE BY $8,000.00 FOR A REVISED TOTAL OF $65,600.00 AS PER REQ R0004001 INCREASE DUE TO INCREASE IN PRINT CENTER UTILIZATION **********	8,000.00	8,000.00
2	1	LOT	>>> 2025 - 2026 BLANKET ORDER <<< BLANKET ORDER TO COVER THE COST OF CANON MAINTENANCE (CLICK CHARGES) MAINTENANCE FEES AT THE FOLLOIWNG RATES PER PAGE: -IMAGEPRESS V700 PRINTER: $0.00930 B&W & $0.0400 COLOR -VARIOPRINT 140 PRINTERS: $0.0025 B&W APPROXIMATELY $4,800 PER MONTH / $57,600 PER YEAR EFFECTIVE JULY 1, 2025, THROUGH JUNE 30, 2026 NOT TO EXCEED: $57,600 BOARD APPROVED 2/2/23 AND 6/20/24	57,600.00	57,600.00

ACCOUNT NUMBER	AMOUNT
010-00000-0-00000-72000-5631-740-0000-0000	$65,600.00

(A)	SHIPMENT	DATE
(B)	SHIPMENT	DATE
(C)	SHIPMENT	DATE
(D)	SHIPMENT	DATE
(E)	SHIPMENT	DATE

SUB TOTAL	$ 65,600.00
SALES TAX	$ 0.00
SHIPPING	$ 0.00
TOTAL	$ 65,600.00

BURBANK UNIFIED SCHOOL DISTRICT

Approved By:

PURCHASING COPY

PURCHASE ORDER

BURBANK UNIFIED SCHOOL DISTRICT

1900 WEST OLIVE AVE, BURBANK, CA 91506-2460
Phone: (818) 729-4400 Fax: (818) 729-4534

PURCHASE ORDER NO.
26000482
Show this number on invoices, packages and correspondence.

VENDOR

SOUTHWEST SCHOOL & OFFICE SUPPLY
805 N BARRINGTON AVE
ONTARIO,

Phone: (800) 227-7159 **Fax:** (909) 980-7159

SHIP TO

BURBANK UNIFIED SCHOOL DISTRICT
WASHINGTON CHILDREN´S CENTER
2207 W. WINONA AVE.
BURBANK, CA 91504-2658

For: CHILD DEVELOPMENT SERVICES
Sarah Gourian/Laura Flosi

PO Date: 07/21/2025 **Deliver By:** 07/01/2025 **Buyer Name:** Maro Bojolyan

ITEM NO.	QTY ORDERED	UNIT OF ISSUE	DESCRIPTION	UNIT PRICE	AMOUNT
1	1	CO	CHANGE ORDER TO INCREASE P.O. # 26000482 BY $98.20 FOR A REVISED TOTAL OF $2098.20 DUE TO TO THE NEED TO CONSOLIDATE REMAINING BLANKET ORDER BALANCES FROM PO'S 26000483 AND 26000482 FOR END OF YEAR ORDERING THROUGH SOUTHWEST, AS PER R0003958. **********	98.20	98.20
2	1	LOT	>>> 2025 - 2026 BLANKET ORDER <<< BLANKET ORDER TO COVER THE COST OF SUPPLIES AND MATERIALS, NOT EQUIPMENT, TO BE ORDERED ONLINE ON AN "AS NEEDED" BASIS, EFFECTIVE 7/1/2025 THROUGH 6/30/2026. TOTAL AMOUNT OF THIS ORDER IS NOT TO EXCEED $2,000.00 (INCLUDING TAX & SHIPPING) ALL ORDERS TO BE DELIVERED, MONDAY-FRIDAY, 8:00 AM TO 4:00 PM, TO: District Office ATTN: Child Development- Laura Flosi 1900 W Olive Ave BURBANK, CA 91506 SarahGourian@burbankusd.org SITE TO ADHERE TO DISTRICT GUIDELINES FOR MINIMUM ORDER OF $50 AND EVERY OTHER WEEK DELIVERY. SIGNED AND DATED PACKING LISTS TO BE FORWARDED TO ACCOUNTS	2,000.00	2,000.00

Vendor Instructions:

1. **Show purchase order number on all invoices, shipping papers and correspondence.**
2. **Mail invoice in duplicate Attn: Accounts Payable, at the above address.**
3. **Packing slip must accompany each delivery showing purchase order, catalog number, serial number and description.**
4. **No changes without written authorization from purchasing.**
5. **If freight charges are applicable, prepay and add to invoice. No C.O.D. charges permitted.**
6. **All vendors/manufacturers representatives must send manufacturers safety data sheet (OSHA Form 20 or equivalent) with shipment when applicable.**

SUB TOTAL	$ 2,098.20
SALES TAX	$ 0.00
SHIPPING	$ 0.00
TOTAL	$ 2,098.20

BURBANK UNIFIED SCHOOL DISTRICT

Approved By:

Peter Knapik

VENDOR COPY

PURCHASE ORDER

BURBANK UNIFIED SCHOOL DISTRICT

1900 WEST OLIVE AVE, BURBANK, CA 91506-2460
Phone: (818) 729-4400 Fax: (818) 729-4534

PURCHASE ORDER NO.
26000483
Show this number on invoices, packages and correspondence.

VENDOR

SOUTHWEST SCHOOL & OFFICE SUPPLY
805 N BARRINGTON AVE
ONTARIO,

Phone: (800) 227-7159 **Fax:** (909) 980-7159

SHIP TO

BURBANK UNIFIED SCHOOL DISTRICT
WASHINGTON CHILDREN´S CENTER
2207 W. WINONA AVE.
BURBANK, CA 91504-2658

For: WASHINGTON CHILDREN´S CENTER
Sarah Gourian/Laura Flosi

PO Date: 07/21/2025 **Deliver By:** 07/01/2025 **Buyer Name:** Maro Bojolyan

ITEM NO.	QTY ORDERED	UNIT OF ISSUE	DESCRIPTION	UNIT PRICE	AMOUNT
1	1	CO	CHANGE ORDER #2: *REDUCE* P.O. # 26000483 BY $75.59 FOR A REVISED TOTAL OF $933.43 DUE TO TO THE NEED TO CONSOLIDATE REMAINING BLANKET ORDER BALANCE INTO PO 26000842 FOR END OF YEAR ORDERING, AS PER R0003957. **********	-75.59	-75.59
2	1	CO	CHANGE ORDER #1: REDUCE BY $240.98 FOR A REVISED TOTAL OF $1,009.02 DUE TO NEEDING TO FREE UP FUNDS IN ORDER TO PURCHASE A TECHNICAL ASSET (SMART TV) ON A NEW REQUISITION FOR THE SCHOOL AGE CLASSROOM AT WASHINGTON CHILDREN'S CENTER, AS PER R0003169. **********	-240.98	-240.98
3	1	LOT	>>> 2025 - 2026 BLANKET ORDER <<< BLANKET ORDER TO COVER THE COST OF SUPPLIES AND MATERIALS, NOT EQUIPMENT, TO BE ORDERED ONLINE ON AN "AS NEEDED" BASIS, EFFECTIVE 7/1/2025 THROUGH 6/30/2026. TOTAL AMOUNT OF THIS ORDER IS NOT TO EXCEED $1250.00 (INCLUDING TAX & SHIPPING) ALL ORDERS TO BE DELIVERED, MONDAY-FRIDAY, 8:00 AM TO 4:00 PM, TO: District Office ATTN: Child Development-Laura Flosi 1900 W Olive Ave	1,250.00	1,250.00

Vendor Instructions:

1. **Show purchase order number on all invoices, shipping papers and correspondence.**
2. **Mail invoice in duplicate Attn: Accounts Payable, at the above address.**
3. **Packing slip must accompany each delivery showing purchase order, catalog number, serial number and description.**
4. **No changes without written authorization from purchasing.**
5. **If freight charges are applicable, prepay and add to invoice. No C.O.D. charges permitted.**
6. **All vendors/manufacturers representatives must send manufacturers safety data sheet (OSHA Form 20 or equivalent) with shipment when applicable.**

SUB TOTAL	$ 933.43
SALES TAX	$ 0.00
SHIPPING	$ 0.00
TOTAL	$ 933.43

BURBANK UNIFIED SCHOOL DISTRICT

Approved By:

Peter Knapik

VENDOR COPY

PURCHASE ORDER

BURBANK UNIFIED SCHOOL DISTRICT

1900 WEST OLIVE AVE, BURBANK, CA 91506-2460
Phone: (818) 729-4400 Fax: (818) 729-4534

PURCHASE ORDER NO.
26000484
Show this number on invoices, packages and correspondence.

VENDOR

SOUTHWEST SCHOOL & OFFICE SUPPLY
805 N BARRINGTON AVE
ONTARIO,

Phone: (800) 227-7159 **Fax:** (909) 980-7159

SHIP TO

BURBANK UNIFIED SCHOOL DISTRICT
WASHINGTON CHILDREN´S CENTER
2207 W. WINONA AVE.
BURBANK, CA 91504-2658

For: CHILD DEVELOPMENT SERVICES
Sarah Gourian/Laura Flosi

PO Date: 07/21/2025 **Deliver By:** 07/01/2025 **Buyer Name:** Maro Bojolyan

ITEM NO.	QTY ORDERED	UNIT OF ISSUE	DESCRIPTION	UNIT PRICE	AMOUNT
1	1	CO	CHANGE ORDER #1: *REDUCE* P.O. # 26000484 BY $22.61 FOR A REVISED TOTAL OF $1031.63 DUE TO THE NEED TO CONSOLIDATE REMAINING BLANKET ORDER BALANCE INTO PO 26000842 FOR END OF YEAR ORDERING, AS PER R0003956. **********	-22.61	-22.61
2	1	LOT	>>> 2025 - 2026 BLANKET ORDER <<< BLANKET ORDER TO COVER THE COST OF SUPPLIES AND MATERIALS, NOT EQUIPMENT, TO BE ORDERED ONLINE ON AN "AS NEEDED" BASIS, EFFECTIVE 7/1/2025 THROUGH 6/30/2026. TOTAL AMOUNT OF THIS ORDER IS NOT TO EXCEED $1250.00 (INCLUDING TAX & SHIPPING) ALL ORDERS TO BE DELIVERED, MONDAY-FRIDAY, 8:00 AM TO 4:00 PM, TO: District Office ATTN: Child Development- Laura Flosi 1900 W Olive Ave BURBANK, CA 91506 SarahGourian@burbankusd.org SITE TO ADHERE TO DISTRICT GUIDELINES FOR MINIMUM ORDER OF $50 AND EVERY OTHER WEEK DELIVERY. SIGNED AND DATED PACKING LISTS TO BE FORWARDED TO ACCOUNTS PAYABLE IN A TIMELY MANNER.	1,250.00	1,250.00

Vendor Instructions:

1. **Show purchase order number on all invoices, shipping papers and correspondence.**
2. **Mail invoice in duplicate Attn: Accounts Payable, at the above address.**
3. **Packing slip must accompany each delivery showing purchase order, catalog number, serial number and description.**
4. **No changes without written authorization from purchasing.**
5. **If freight charges are applicable, prepay and add to invoice. No C.O.D. charges permitted.**
6. **All vendors/manufacturers representatives must send manufacturers safety data sheet (OSHA Form 20 or equivalent) with shipment when applicable.**

SUB TOTAL	$ 1,227.39
SALES TAX	$ 0.00
SHIPPING	$ 0.00
TOTAL	$ 1,227.39

BURBANK UNIFIED SCHOOL DISTRICT

Approved By:

Peter Knapik

VENDOR COPY

PURCHASE ORDER

BURBANK UNIFIED SCHOOL DISTRICT

1900 WEST OLIVE AVE, BURBANK, CA 91506-2460
Phone: (818) 729-4400 Fax: (818) 729-4534

PURCHASE ORDER NO.
26000505
Show this number on invoices, packages and correspondence.

VENDOR

OFFICE DEPOT/ BUSINESS SERVICES DIVISION
PO BOX 29248
PHOENIX, AZ 85038-9248

Phone: (888) 263-3423 **Fax:** (888) 251-4058

SHIP TO

BURBANK UNIFIED SCHOOL DISTRICT
JOHN BURROUGHS HIGH SCHOOL
1920 W. CLARK AVE.
BURBANK, CA 91506-1999

For: JOHN BURROUGHS HIGH SCHOOL
J. SANCHEZ/MATERIALS - OFFICE OFFICE DEPOT B

PO Date: 07/23/2025 **Deliver By:** 07/13/2025 **Buyer Name:** Maro Bojolyan

ITEM NO.	QTY ORDERED	UNIT OF ISSUE	DESCRIPTION	UNIT PRICE	AMOUNT
1	1	CO	CHANGE ORDER #2: INCREASE P.O. # 26000505 BY $1,000.00 FOR A REVISED TOTAL OF $7,500.00 IN ORDER TO SUPPLEMENT ADDITIONAL PURCHASES OF MATERIALS FOR THE SITE FOR THE REMAINDER OF THE SCHOOL YEAR, AS PER R0003862. **********	1,000.00	1,000.00
2	1	CO	CHANGE ORDER #1: INCREASE BY $1,500.00 FOR A REVISED TOTAL OF $6,500.00 DUE TO EXHAUSTED FUNDS FOR SUPPLIES AND MATERIALS PRIOR TO END OF SCHOOL YEAR, AS PER R0002385. **********	1,500.00	1,500.00
3	1	LOT	>>> 2025 - 2026 BLANKET ORDER <<< BLANKET ORDER TO COVER THE COST OF SUPPLIES AND MATERIALS, NOT EQUIPMENT, TO BE ORDERED ONLINE ON AN "AS NEEDED" BASIS, EFFECTIVE 7/1/2025 THROUGH 6/30/2026. TOTAL AMOUNT OF THIS ORDER IS NOT TO EXCEED $5,000.00 (INCLUDING TAX & SHIPPING) ALL ORDERS TO BE DELIVERED, MONDAY-FRIDAY, 8:00 AM TO 4:00 PM, TO: JOHN BURROUGHS HIGH SCHOOL ATTN: JESSICA SANCHEZ 1920 W. CLARK AVE. BURBANK CA, 91506 jessicasanchez2@burbankusd.org	5,000.00	5,000.00

Vendor Instructions:

1. **Show purchase order number on all invoices, shipping papers and correspondence.**
2. **Mail invoice in duplicate Attn: Accounts Payable, at the above address.**
3. **Packing slip must accompany each delivery showing purchase order, catalog number, serial number and description.**
4. **No changes without written authorization from purchasing.**
5. **If freight charges are applicable, prepay and add to invoice. No C.O.D. charges permitted.**
6. **All vendors/manufacturers representatives must send manufacturers safety data sheet (OSHA Form 20 or equivalent) with shipment when applicable.**

SUB TOTAL	$ 7,500.00
SALES TAX	$ 0.00
SHIPPING	$ 0.00
TOTAL	$ 7,500.00

BURBANK UNIFIED SCHOOL DISTRICT

Approved By:

Peter Knapik

VENDOR COPY

PURCHASE ORDER

BURBANK UNIFIED SCHOOL DISTRICT

1900 WEST OLIVE AVE, BURBANK, CA 91506-2460
Phone: (818) 729-4400 Fax: (818) 729-4534

PURCHASE ORDER NO.
26000524
Show this number on invoices, packages and correspondence.

VENDOR

WAXIE SANITARY SUPPLY
PO BOX 60227
LOS ANGELES, CA 90060-0227

Phone: (858) 292-8111 **Fax:** (909) 942-3193

SHIP TO

BURBANK UNIFIED SCHOOL DISTRICT
CHILD DEVELOPMENT SERVICES
1900 WEST OLIVE AVE.
BURBANK, CA 91506-2460

For: CHILD DEVELOPMENT SERVICES
Sarah Gourian/Laura Flosi

PO Date: 07/24/2025 **Deliver By:** 07/01/2025 **Buyer Name:** Maro Bojolyan

ITEM NO.	QTY ORDERED	UNIT OF ISSUE	DESCRIPTION	UNIT PRICE	AMOUNT
1	1	CO	CHANGE ORDER #1: INCREASE P.O. # 26000524 BY $73.54 FOR A REVISED TOTAL OF $2073.54 DUE TO THE NEED TO CONSOLIDATE REMAINING BALANCES FROM PO 26000525 FOR END OF YEAR ORDERING, AS PER R0003964. **********	73.54	73.54
2	1	LOT	>>> 2025 - 2026 BLANKET ORDER <<< BLANKET ORDER TO COVER THE COST OF CUSTODIAL AND SAFETY SUPPLIES FOR CHILD DEVELOPMENT ON AS NEEDED BASIS FROM JULY 1, 2025, THROUGH JUNE 30, 2026. PERSONS AUTHORIZED TO ORDER THIS PURCHASE ORDER ARE: Sarah Gourian Laura Flosi NOT TO EXCEED: $2000.00 INCLUDING TAXES AND SHIPPING REFERENCE OMNIA PARTNERS PIGGYBACK CONTRACT #202329-01. *** SPECIAL INSTRUCTIONS *** * VENDOR: FOR PROMPT PAYMENT, BILL TO: APINVOICES@BURBANKUSD.ORG * PLEASE NOTE: WE ARE NO LONGER ACCEPTING	2,000.00	2,000.00

Vendor Instructions:

1. **Show purchase order number on all invoices, shipping papers and correspondence.**
2. **Mail invoice in duplicate Attn: Accounts Payable, at the above address.**
3. **Packing slip must accompany each delivery showing purchase order, catalog number, serial number and description.**
4. **No changes without written authorization from purchasing.**
5. **If freight charges are applicable, prepay and add to invoice. No C.O.D. charges permitted.**
6. **All vendors/manufacturers representatives must send manufacturers safety data sheet (OSHA Form 20 or equivalent) with shipment when applicable.**

SUB TOTAL	$ 2,073.54
SALES TAX	$ 0.00
SHIPPING	$ 0.00
TOTAL	$ 2,073.54

BURBANK UNIFIED SCHOOL DISTRICT

Approved By:

Peter Knapik

VENDOR COPY

PURCHASE ORDER

BURBANK UNIFIED SCHOOL DISTRICT

1900 WEST OLIVE AVE, BURBANK, CA 91506-2460
Phone: (818) 729-4400 Fax: (818) 729-4534

PURCHASE ORDER NO.
26000525
Show this number on invoices, packages and correspondence.

VENDOR

WAXIE SANITARY SUPPLY
PO BOX 60227
LOS ANGELES, CA 90060-0227

Phone: (858) 292-8111 **Fax:** (909) 942-3193

SHIP TO

BURBANK UNIFIED SCHOOL DISTRICT
CHILD DEVELOPMENT SERVICES
1900 WEST OLIVE AVE.
BURBANK, CA 91506-2460

For: CHILD DEVELOPMENT SERVICES
Sarah Gourian/Laura Flosi

PO Date: 07/24/2025 **Deliver By:** 07/01/2025 **Buyer Name:** Maro Bojolyan

ITEM NO.	QTY ORDERED	UNIT OF ISSUE	DESCRIPTION	UNIT PRICE	AMOUNT
1	1	CO	CHANGE ORDER TO *REDUCE* P.O. # 26000525 BY $73.54 FOR A REVISED TOTAL OF $1926.46 DUE TO THE NEED TO CONSOLIDATE REMAINING BLANKET BALANCE INTO PO 26000524 FOR END OF YEAR ORDERING, AS PER R0003963. **********	-73.54	-73.54
2	1	LOT	>>> 2025 - 2026 BLANKET ORDER <<< BLANKET ORDER TO COVER THE COST OF CUSTODIAL AND SAFETY SUPPLIES FOR CHILD DEVELOPMENT ON AS NEEDED BASIS FROM JULY 1, 2025, THROUGH JUNE 30, 2026. PERSONS AUTHORIZED TO ORDER THIS PURCHASE ORDER ARE: Sarah Gourian Laura Flosi NOT TO EXCEED: $2000.00 INCLUDING TAXES AND SHIPPING REFERENCE OMNIA PARTNERS PIGGYBACK CONTRACT #202329-01. *** SPECIAL INSTRUCTIONS *** * VENDOR: FOR PROMPT PAYMENT, BILL TO: APINVOICES@BURBANKUSD.ORG	2,000.00	2,000.00

Vendor Instructions:

1. **Show purchase order number on all invoices, shipping papers and correspondence.**
2. **Mail invoice in duplicate Attn: Accounts Payable, at the above address.**
3. **Packing slip must accompany each delivery showing purchase order, catalog number, serial number and description.**
4. **No changes without written authorization from purchasing.**
5. **If freight charges are applicable, prepay and add to invoice. No C.O.D. charges permitted.**
6. **All vendors/manufacturers representatives must send manufacturers safety data sheet (OSHA Form 20 or equivalent) with shipment when applicable.**

SUB TOTAL	$ 1,926.46
SALES TAX	$ 0.00
SHIPPING	$ 0.00
TOTAL	$ 1,926.46

BURBANK UNIFIED SCHOOL DISTRICT

Approved By:

Peter Knapik

VENDOR COPY

PURCHASE ORDER

BURBANK UNIFIED SCHOOL DISTRICT

1900 WEST OLIVE AVE, BURBANK, CA 91506-2460
Phone: (818) 729-4400 Fax: (818) 729-4534

PURCHASE ORDER NO.
26000547
Show this number on invoices, packages and correspondence.

VENDOR
SARAH KNAUFF SPEECH THERAPY
C/O SPECIAL EDUCATION
BURBANK, CA 91506

Phone: (803) 760-9464 **Fax:** (818)

SHIP TO
BURBANK UNIFIED SCHOOL DISTRICT
SPECIAL EDUCATION
1900 WEST OLIVE AVE.
BURBANK, CA 91506-2460

For: SPECIAL EDUCATION
SHEARER/CONSULTANT SERVICES

PO Date: 07/28/2025 **Deliver By:** 07/01/2025 **Buyer Name:** Maro Bojolyan

ITEM NO.	QTY ORDERED	UNIT OF ISSUE	DESCRIPTION	UNIT PRICE	AMOUNT
1	1	CO	CHANGE ORDER #1: INCREASE P.O. # 26000547 BY $$10,000.00 FOR A REVISED TOTAL OF $$212,450.00 DUE TO ADDITIONAL ASSIGMENTS FOR COMPENSATORY EDUCATION FOR SPECIAL EDUCATION STUDENTS, AS PER R0003911. BOARD APPROVED 5/7/26 **********	10,000.00	10,000.00
2	1	LOT	AGREEMENT BETWEEN THE BURBANK UNIFIED SCHOOL DISTRICT AND SARAH KNAUFF SPEECH THERAPY, CONSULTANT, FOR THE FOLLOWING SERVICES: CONSULTANT WILL PROVIDE ASSESSMENTS AND SPEECH AND LANGUAGE SERVICES TO SPECIAL EDUCATION STUDENTS, UP TO 40 HOURS PER WEEK. CONSULTANT AGREES TO PERFORM SERVICES AT A RATE OF $115 PER HOUR FOR A TOTAL NOT TO EXCEED $202,450. PAYMENTS TO BE MADE ACCORDING TO THE FOLLOWING SCHEDULE: _X__ MULTIPLE PAYMENTS CONSULTANT WILL PROVIDE INVOICES MONTHLY THE TERM OF THIS AGREEMENT IS FOR THE PERIOD OF 07/01/2025 THROUGH 06/30/2026.	202,450.00	202,450.00

Vendor Instructions:

1. **Show purchase order number on all invoices, shipping papers and correspondence.**
2. **Mail invoice in duplicate Attn: Accounts Payable, at the above address.**
3. **Packing slip must accompany each delivery showing purchase order, catalog number, serial number and description.**
4. **No changes without written authorization from purchasing.**
5. **If freight charges are applicable, prepay and add to invoice. No C.O.D. charges permitted.**
6. **All vendors/manufacturers representatives must send manufacturers safety data sheet (OSHA Form 20 or equivalent) with shipment when applicable.**

SUB TOTAL	$ 212,450.00
SALES TAX	$ 0.00
SHIPPING	$ 0.00
TOTAL	$ 212,450.00

BURBANK UNIFIED SCHOOL DISTRICT

Approved By:

Peter Knapik

VENDOR COPY

PURCHASE ORDER

BURBANK UNIFIED SCHOOL DISTRICT

1900 WEST OLIVE AVE, BURBANK, CA 91506-2460
Phone: (818) 729-4400 Fax: (818) 729-4534

PURCHASE ORDER NO.
26000618
Show this number on invoices, packages and correspondence.

VENDOR

AMS.NET, LLC
502 COMMERCE WAY
LIVERMORE, CA 94551

Phone: (559) 547-2866 **Fax:** (925) 606-4668

SHIP TO

BURBANK UNIFIED SCHOOL DISTRICT
VARIOUS SITES

For: TECHNOLOGY SERVICES
MOYA/LEPATAN/TECHNOLOGY

PO Date: 08/08/2025 **Deliver By:** 06/30/2026 **Buyer Name:** David Gerharter

ITEM NO.	QTY ORDERED	UNIT OF ISSUE	DESCRIPTION	UNIT PRICE	AMOUNT
			++ CHANGE ORDER #1: REDUCE BY $3,256,000.86 FOR A REVISED TOTAL OF $5,813,182.66 AS PER REQ R0001163 Reduce by $3,256,000.86 for a revised total of $5,813,182.66 as a result of software licensing reconfiguration which replaces all 60- and 84-month device licensing with enterprise licensing for a 36-month term: Per Change Order 1 Q-00094251, Change Order 2 Q-00094253, Change Order 3 Q-00094254, and Change Order 4 Q-00094256. Add items as found on new quote SaaS Q-00093217. BOARD APPROVED 10/9/25 ********** 2425-025 2025 E-RATE NETWORK AND WIRELESS INFRASTRUCTURE PROJECT SPURR MINI-BID FOR THE PURCHASE OF NETWORK AND WIRELESS EQUIPMENT USING THE APPROVED PRICING LIST WITH AMS.NET (MGT) - PENDING E-RATE SAVINGS AND DISCOUNTS SPURR PROJECT #104955 SPURR #SMC-TN-041 BOARD APPROVED 3/6/25		

Vendor Instructions:

1. **Show purchase order number on all invoices, shipping papers and correspondence.**
2. **Mail invoice in duplicate Attn: Accounts Payable, at the above address.**
3. **Packing slip must accompany each delivery showing purchase order, catalog number, serial number and description.**
4. **No changes without written authorization from purchasing.**
5. **If freight charges are applicable, prepay and add to invoice. No C.O.D. charges permitted.**
6. **All vendors/manufacturers representatives must send manufacturers safety data sheet (OSHA Form 20 or equivalent) with shipment when applicable.**

Contract Number
SPURR CONTRACT SMC-TN-04

SUB TOTAL	$ 5,711,796.28
SALES TAX	$ 414,775.59
SHIPPING	$ 0.00
TOTAL	$ 6,126,571.87

BURBANK UNIFIED SCHOOL DISTRICT

Approved By:

Peter Knapik

VENDOR COPY

PURCHASE ORDER

BURBANK UNIFIED SCHOOL DISTRICT

1900 WEST OLIVE AVE, BURBANK, CA 91506-2460
Phone: (818) 729-4400 Fax: (818) 729-4534

PURCHASE ORDER NO.
26000642
Show this number on invoices, packages and correspondence.

VENDOR

AMAZON CAPITAL SERVICES
PO BOX 035184
SEATTLE, WA 98124-5184

Phone: (206) 435-3958 **Fax:**

SHIP TO

BURBANK UNIFIED SCHOOL DISTRICT
EMERSON ELEMENTARY
720 E. CYPRESS AVE.
BURBANK, CA 91501-1898

For: EMERSON ELEMENTARY
M. WILLIAMS-BAER

PO Date: 08/07/2025 **Deliver By:** 08/01/2025 **Buyer Name:** Maro Bojolyan

ITEM NO.	QTY ORDERED	UNIT OF ISSUE	DESCRIPTION	UNIT PRICE	AMOUNT
1	1	CO	CHANGE ORDER #4: INCREASE P.O. # 26000642 BY $3000.00 FOR A REVISED TOTAL OF $10,000.00 DUE TO NEED FOR MORE SUPPLES, AS PER R0003870. ********** CHANGE ORDER #3: INCREASE P.O. # 26000642 BY $1,000.00 FOR A REVISED TOTAL OF $7,000.00 DUE TO NEED FOR MORE SUPPLIES, AS PER R0003237. ********** CHANGE ORDER #2: INCREASE BY $2000.00 FOR A REVISED TOTAL OF $6,000.00 DUE TO NEED OF SUPPLIES AS PER R0001381 ********** CHANGE ORDER #1: INCREASE BY $2000.00 FOR A REVISED TOTAL OF $4000.00 AS PER R0000900 TO MAKE ADDITONAL PURCHASES ********** >>> 2025 - 2026 BLANKET ORDER <<< BLANKET ORDER TO COVER THE COST OF SUPPLIES AND MATERIALS, NOT EQUIPMENT, TO BE ORDERED ONLINE ON AN "AS NEEDED" BASIS, EFFECTIVE 7/1/2025 THROUGH 6/30/2026. TOTAL AMOUNT OF THIS ORDER IS NOT TO EXCEED $2,000.00 (INCLUDING TAX & SHIPPING)	3,000.00 1,000.00 2,000.00 2,000.00 2,000.00	3,000.00 1,000.00 2,000.00 2,000.00 2,000.00

Vendor Instructions:

1. **Show purchase order number on all invoices, shipping papers and correspondence.**
2. **Mail invoice in duplicate Attn: Accounts Payable, at the above address.**
3. **Packing slip must accompany each delivery showing purchase order, catalog number, serial number and description.**
4. **No changes without written authorization from purchasing.**
5. **If freight charges are applicable, prepay and add to invoice. No C.O.D. charges permitted.**
6. **All vendors/manufacturers representatives must send manufacturers safety data sheet (OSHA Form 20 or equivalent) with shipment when applicable.**

SUB TOTAL	$ 10,000.00
SALES TAX	$ 0.00
SHIPPING	$ 0.00
TOTAL	$ 10,000.00

BURBANK UNIFIED SCHOOL DISTRICT

Approved By:

Peter Knapik

VENDOR COPY

PURCHASE ORDER

BURBANK UNIFIED SCHOOL DISTRICT

1900 WEST OLIVE AVE, BURBANK, CA 91506-2460
Phone: (818) 729-4400 Fax: (818) 729-4534

PURCHASE ORDER NO.
26000728
Show this number on invoices, packages and correspondence.

VENDOR

SIGN UP INTERPRETING SERVICES, LLC
P.O. BOX 941
SUNSET BEACH, CA 90742

Phone: (657) 464-4192 **Fax:**

SHIP TO

BURBANK UNIFIED SCHOOL DISTRICT
PERSONNEL SERVICES
1900 WEST OLIVE ST.
BURBANK, CA 91506-2460

For: PERSONNEL SERVICES
L. TRAMMEL/HUMAN RESOURCES SERVICES

PO Date: 08/18/2025 **Deliver By:** 08/09/2025 **Buyer Name:** Maro Bojolyan

ITEM NO.	QTY ORDERED	UNIT OF ISSUE	DESCRIPTION	UNIT PRICE	AMOUNT
1	1	CO	CHANGE ORDER #3: INCREASE P.O. # 26000728 BY $20,000.00 FOR A REVISED TOTAL OF $170,000.00 DUE TO THE NEED TO PROVIDE ADDITIONAL INTERPRETING SERVICES TO OUR EMPLOYEES, AS PER R0003913. **********	20,000.00	20,000.00
2	1	CO	CHANGE ORDER #2: INCREASE P.O. # 26000728 BY $30,000.00 FOR A REVISED TOTAL OF $150,000.00 DUE TO THE NEED TO PAY INVOICES FOR SERVICES PROVIDED FOR INTERPRETTING, AS PER R0003286. **********	30,000.00	30,000.00
3	1	CO	CHANGE ORDER #1: INCREASE BY $30,000.00 FOR A REVISED TOTAL OF $120,000.00 DUE TO THE NEED TO PAY INVOICES FOR INTERPRETING SERVICES, AS PER R0002942. **********	30,000.00	30,000.00
4	1	EA	AGREEMENT BETWEEN THE BURBANK UNIFIED SCHOOL DISTRICT AND SIGN UP INTERPRETING, LLC FOR THE FOLLOWING PROFESSIONAL SERVICES: INTERPRETING FOR EMPLOYEES TOTAL NOT TO EXCEED: $90,000.00 THE TERM OF THIS AGREEMENT IS FOR THE PERIOD OF 7/1/2025 THROUGH 6/30/26.	90,000.00	90,000.00

Vendor Instructions:

1. **Show purchase order number on all invoices, shipping papers and correspondence.**
2. **Mail invoice in duplicate Attn: Accounts Payable, at the above address.**
3. **Packing slip must accompany each delivery showing purchase order, catalog number, serial number and description.**
4. **No changes without written authorization from purchasing.**
5. **If freight charges are applicable, prepay and add to invoice. No C.O.D. charges permitted.**
6. **All vendors/manufacturers representatives must send manufacturers safety data sheet (OSHA Form 20 or equivalent) with shipment when applicable.**

Contract Number
BOARD APPROVED 7/24/2025

SUB TOTAL	$ 170,000.00
SALES TAX	$ 0.00
SHIPPING	$ 0.00
TOTAL	$ 170,000.00

BURBANK UNIFIED SCHOOL DISTRICT

Approved By:

Peter Knapik

VENDOR COPY

PURCHASE ORDER

BURBANK UNIFIED SCHOOL DISTRICT

1900 WEST OLIVE AVE, BURBANK, CA 91506-2460
Phone: (818) 729-4400 Fax: (818) 729-4534

PURCHASE ORDER NO.
26000891
Show this number on invoices, packages and correspondence.

ATKINSON, ANDELSON, LOYA, RUUD

Vendor# L000006287

VENDOR
ATKINSON, ANDELSON, LOYA, RUUD & ROMO
12800 CENTER COURT DR STE 300
CERRITOS, CA 90703-9364

Phone: (562) 653-3200 **Fax:** (562) 653-3333

SHIP TO
BURBANK UNIFIED SCHOOL DISTRICT
FISCAL SERVICES
1900 WEST OLIVE AVE.
BURBANK, CA 91506-2460

For: FISCAL SERVICES
ADAMS/BUSINESS OFFICE

PO Date: 09/04/2025 **Requested Delivery:** 09/13/2024 **Buyer Name:** Maro Bojolyan **Req#** R0000902

ITEM NO.	QTY ORDERED	UNIT OF ISSUE	DESCRIPTION	UNIT PRICE	AMOUNT
1	1	CO	CHANGE ORDER #2: INCREASE BY $655,000.00 FOR A REVISED TOTAL OF $1,174,803.45 AS PER REQ R0003980 INCREASE DUE TO OUTSTANDING INVOICES AND PROJECTED LEGAL COSTS THROUGH JUNE 30, 2026 **********	655,000.00	655,000.00
2	1	CO	CHANGE ORDER #1; REDUCE BY $25,196.55 FOR A REVISED TOTAL OF $519,803.45 AS PER EMAIL FROM JEANETTE VICTORIA AND JASON HASTY INVOICE 781872 WAS PAID AGAINST PO 26002173 IN ERROR. THIS CHANGE ORDER IS TO ADJUST THE ENCUMBRANCE AVAILABLE UNDER THIS PO ACCORDNGLY. ********** AGREEMENT BETWEEN THE BURBANK UNIFIED SCHOOL DISTRICT AND ATKINSON, ANDELSON, LOYA RUUD & ROMO FOR THE FOLLOWING PROFESSIONAL SERVICES: LEGAL ADVICE, SUPPORT AND DIRECTION IN AREAS OF SPECIALTY SUCH AS EDUCATION LAW. SERVICES MAY ALSO INCLUDE PREPARATION FOR AND REPRENSENTATION IN COURT. THE TERM OF THIS AGREEMENT IS FOR THE PERIOD OF JULY 1, 2024 THROUGH JUNE 30, 2026. *THIS PO COVERS 7/1/2025-6/30/2026	-25,196.55	-25,196.55

ACCOUNT NUMBER	AMOUNT
010-00000-0-00000-72000-5820-740-0000-0000	$1,098,553.45
010-00000-0-00000-72000-5820-747-0000-0000	$76,250.00

Service Agreement

SUB TOTAL	$ 1,174,803.45
SALES TAX	$ 0.00
SHIPPING	$ 0.00
TOTAL	$ 1,174,803.45

(A)	SHIPMENT	DATE
(B)	SHIPMENT	DATE
(C)	SHIPMENT	DATE
(D)	SHIPMENT	DATE
(E)	SHIPMENT	DATE

BURBANK UNIFIED SCHOOL DISTRICT

Approved By:

PURCHASING COPY

PURCHASE ORDER

BURBANK UNIFIED SCHOOL DISTRICT

1900 WEST OLIVE AVE, BURBANK, CA 91506-2460
Phone: (818) 729-4400 Fax: (818) 729-4534

PURCHASE ORDER NO.
26000966
Show this number on invoices, packages and correspondence.

VENDOR

ALPHA INTERPRETING AGENCY, CORP.
1136 MILLBROOK RD
CORONA, CA 92880

Phone: (310) 220-9655 **Fax:** (818)

SHIP TO

BURBANK UNIFIED SCHOOL DISTRICT
PERSONNEL SERVICES
1900 WEST OLIVE ST.
BURBANK, CA 91506-2460

For: PERSONNEL SERVICES
L. TRAMMEL/HUMAN RESOURCES SERVICES

PO Date: 09/11/2025 **Deliver By:** 09/04/2025 **Buyer Name:** Maro Bojolyan

ITEM NO.	QTY ORDERED	UNIT OF ISSUE	DESCRIPTION	UNIT PRICE	AMOUNT
1	1	CO	CHANGE ORDER #2: INCREASE P.O. # 2600966 BY $80,000.00 FOR A REVISED TOTAL OF $205,000.00 DUE TO PAY INVOICES FOR INTERPRETING, AS PER R0003970. BOARD APPROVED 5/21/26 **********	80,000.00	80,000.00
2	1	CO	CHANGE ORDER #1: INCREASE P.O. # 26000966 BY $35,000.00 FOR A REVISED TOTAL OF $125,000.00 DUE TO PAY INVOICES FOR INTERPRETERS, AS PER R0002940. BOARD APPROVED 4/9/26 **********	35,000.00	35,000.00
3	1	LOT	AGREEMENT BETWEEN THE BURBANK UNIFIED SCHOOL DISTRICT AND ALPHA INTERPRETING AGENCY, CORP, CONSULTANT, FOR THE FOLLOWING SERVICES: PROVIDING DHH INTERPRETING SERVICES FOR SPECIAL EDUCATION STUDENTS CONSULTANT AGREES TO PERFORM SERVICES FOR A TOTAL NOT TO EXCEED $90,000 PAYMENTS TO BE MADE ACCORDING TO THE FOLLOWING SCHEDULE: _X__ MULTIPLE PAYMENTS	90,000.00	90,000.00

Vendor Instructions:

1. **Show purchase order number on all invoices, shipping papers and correspondence.**
2. **Mail invoice in duplicate Attn: Accounts Payable, at the above address.**
3. **Packing slip must accompany each delivery showing purchase order, catalog number, serial number and description.**
4. **No changes without written authorization from purchasing.**
5. **If freight charges are applicable, prepay and add to invoice. No C.O.D. charges permitted.**
6. **All vendors/manufacturers representatives must send manufacturers safety data sheet (OSHA Form 20 or equivalent) with shipment when applicable.**

Contract Number
BOARD APPROVED 8/21/2025

SUB TOTAL	$ 205,000.00
SALES TAX	$ 0.00
SHIPPING	$ 0.00
TOTAL	$ 205,000.00

BURBANK UNIFIED SCHOOL DISTRICT

Approved By:

Peter Knapik

VENDOR COPY

PURCHASE ORDER

BURBANK UNIFIED SCHOOL DISTRICT

1900 WEST OLIVE AVE, BURBANK, CA 91506-2460
Phone: (818) 729-4400 Fax: (818) 729-4534

PURCHASE ORDER NO.
26001151
Show this number on invoices, packages and correspondence.

VENDOR

AMAZON CAPITAL SERVICES
PO BOX 035184
SEATTLE, WA 98124-5184

Phone: (206) 435-3958 **Fax:**

SHIP TO

BURBANK UNIFIED SCHOOL DISTRICT
DISNEY ELEMENTARY
1220 W. ORANGE GROVE AVE.
BURBANK, CA 91506-2016

For: DISNEY ELEMENTARY
B. SCHWARTZ/DISNEY

PO Date: 09/26/2025 **Deliver By:** 09/26/2025 **Buyer Name:** Maro Bojolyan

ITEM NO.	QTY ORDERED	UNIT OF ISSUE	DESCRIPTION	UNIT PRICE	AMOUNT
1	1	CO	CHANGE ORDER #2: INCREASE P.O. # 26001151 BY $2,000.00 FOR A REVISED TOTAL OF $5,000.00 DUE TO MORE FUNDS NEEDED FOR SCHOOL PURCHASES AS PER R0003835. **********.	2,000.00	2,000.00
2	1	CO	CHANGE ORDER #1: INCREASE BY $2000.00 FOR A REVISED TOTAL OF $3000.00 DUE TO AVAILABLE FUNDS, AS PER R0003111. **********	2,000.00	2,000.00
3	1	LOT	>>> 2025 - 2026 BLANKET ORDER <<< BLANKET ORDER TO COVER THE COST OF SUPPLIES AND MATERIALS, NOT EQUIPMENT, TO BE ORDERED ONLINE ON AN "AS NEEDED" BASIS, EFFECTIVE 7/1/2025 THROUGH 6/30/2026. TOTAL AMOUNT OF THIS ORDER IS NOT TO EXCEED $1,000 (INCLUDING TAX & SHIPPING) ALL ORDERS TO BE DELIVERED, MONDAY-FRIDAY, 8:00 AM TO 3:00 PM, TO WALT DISNEY ELEMENTARY ATTN: BROOKE SCHWARTZ 1220 W ORANGE GROVE AVE BURBANK, CA 91506 INSTRUCTIONS TO AMAZON USER: SELECT BLANKET PO 26001151 WHEN CHECKING OUT A CART ON	1,000.00	1,000.00

Vendor Instructions:

1. **Show purchase order number on all invoices, shipping papers and correspondence.**
2. **Mail invoice in duplicate Attn: Accounts Payable, at the above address.**
3. **Packing slip must accompany each delivery showing purchase order, catalog number, serial number and description.**
4. **No changes without written authorization from purchasing.**
5. **If freight charges are applicable, prepay and add to invoice. No C.O.D. charges permitted.**
6. **All vendors/manufacturers representatives must send manufacturers safety data sheet (OSHA Form 20 or equivalent) with shipment when applicable.**

SUB TOTAL	$ 5,000.00
SALES TAX	$ 0.00
SHIPPING	$ 0.00
TOTAL	$ 5,000.00

BURBANK UNIFIED SCHOOL DISTRICT

Approved By:

Peter Knapik

VENDOR COPY

PURCHASE ORDER

BURBANK UNIFIED SCHOOL DISTRICT

1900 WEST OLIVE AVE, BURBANK, CA 91506-2460
Phone: (818) 729-4400 Fax: (818) 729-4534

PURCHASE ORDER NO.
26001190
Show this number on invoices, packages and correspondence.

VENDOR

AMAZON CAPITAL SERVICES
PO BOX 035184
SEATTLE, WA 98124-5184

Phone: (206) 435-3958 **Fax:**

SHIP TO

BURBANK UNIFIED SCHOOL DISTRICT
EMERSON ELEMENTARY
720 E. CYPRESS AVE.
BURBANK, CA 91501-1898

For: EMERSON ELEMENTARY
MAUREEN/PROP 28 SUPPLIES

PO Date: 10/02/2025 **Deliver By:** 10/02/2025 **Buyer Name:** Maro Bojolyan

ITEM NO.	QTY ORDERED	UNIT OF ISSUE	DESCRIPTION	UNIT PRICE	AMOUNT
1	1	CO	CHANGE ORDER #4: INCREASE P.O. # 26001190 BY $2,000.00 FOR A REVISED TOTAL OF $6,500.00DUE TO NEED OF MORE SUPPLIES, AS PER R0003872. ********** CHANGE ORDER #3: INCREASE P.O. #26001190 BY $500.00 FOR A REVISED TOTAL OF $4,500.00 DUE TO A NEED FOR MORE SUPPLIES, AS PER R0003324. ********** CHANGE ORDER #2: INCREASE BY $1,000.00 FOR A REVISED TOTAL OF $4,000.00 DUE TO NEEDING MORE SUPPLIES AS PER R0001753. ********** CHANGE ORDER #1: INCREASE BY $1000.00 FOR A REVISED TOTAL OF $3000.00 DUE TO NEEDING MORE SEUSSICAL MUSICAL ITEMS AS PER R0001591. ********** >>> 2025 - 2026 BLANKET ORDER <<< BLANKET ORDER TO COVER THE COST OF SUPPLIES AND MATERIALS, NOT EQUIPMENT, TO BE ORDERED ONLINE ON AN "AS NEEDED" BASIS, EFFECTIVE 7/1/2025 THROUGH 6/30/2026. TOTAL AMOUNT OF THIS ORDER IS NOT TO EXCEED $2,000.00 (INCLUDING TAX & SHIPPING)	2,000.00 500.00 1,000.00 1,000.00 2,000.00	2,000.00 500.00 1,000.00 1,000.00 2,000.00

Vendor Instructions:

1. **Show purchase order number on all invoices, shipping papers and correspondence.**
2. **Mail invoice in duplicate Attn: Accounts Payable, at the above address.**
3. **Packing slip must accompany each delivery showing purchase order, catalog number, serial number and description.**
4. **No changes without written authorization from purchasing.**
5. **If freight charges are applicable, prepay and add to invoice. No C.O.D. charges permitted.**
6. **All vendors/manufacturers representatives must send manufacturers safety data sheet (OSHA Form 20 or equivalent) with shipment when applicable.**

SUB TOTAL	$ 6,500.00
SALES TAX	$ 0.00
SHIPPING	$ 0.00
TOTAL	$ 6,500.00

BURBANK UNIFIED SCHOOL DISTRICT

Approved By:

Peter Knapik

VENDOR COPY

PURCHASE ORDER

BURBANK UNIFIED SCHOOL DISTRICT

1900 WEST OLIVE AVE, BURBANK, CA 91506-2460
Phone: (818) 729-4400 Fax: (818) 729-4534

PURCHASE ORDER NO.
26001229
Show this number on invoices, packages and correspondence.

VENDOR

CHILDCARE CAREERS LLC
DBA THE EDUCATION TEAM
2000 SIERRA POINT PKWY SUITE 702
BRISBANE, CA 94005

Phone: (877) 222-6070 **Fax:**

SHIP TO

BURBANK UNIFIED SCHOOL DISTRICT
CHILD DEVELOPMENT SERVICES
1900 WEST OLIVE AVE.
BURBANK, CA 91506-2460

For: CHILD DEVELOPMENT SERVICES
J. TRONCOSO/LAURA FLOSI ATB

PO Date: 10/06/2025 **Deliver By:** 10/06/2025 **Buyer Name:** Maro Bojolyan

ITEM NO.	QTY ORDERED	UNIT OF ISSUE	DESCRIPTION	UNIT PRICE	AMOUNT
1	1	CO	CHANGE ORDER #1: INCREASE P.O. # 26001229_ BY $100,000.00 FOR A REVISED TOTAL OF $300,000.00 DUE TO MORE USE THAN PROJECTED, AS PER R0003778. BOARD APPROVED 5/7/26 **********	100,000.00	100,000.00
2	1	LOT	AGREEMENT BETWEEN THE BURBANK UNIFIED SCHOOL DISTRICT AND CHILDCARE CAREERS LLC DBA THE EDUCATION TEAM FOR THE FOLLOWING PROFESSIONAL SERVICES: PROVIDE SUBSTITUTE COVERAGE AS NEEDED FOR ALL CHILD DEVELOPMENT SITES TOTAL NOT TO EXCEED; 200,000.00 THE TERM OF THIS AGREEMENT IS FOR THE PERIOD OF 7/1/25-6/30/26. ***ALL TERMS AND CONDITIONS OF THE AGREEMENT TO THIS PURCHASE ORDER. BILLTO APINCOICES@BURBANKUSD.ORG BURBANK UNIFIED SCHOOL DISTRICT ATTN: ACCOUNTS PAYABLE 1900 W OLIVE AVE BURBANK CA 91506 BOARD APPROVAL DATE 8/11/2025	200,000.00	200,000.00

Vendor Instructions:

1. **Show purchase order number on all invoices, shipping papers and correspondence.**
2. **Mail invoice in duplicate Attn: Accounts Payable, at the above address.**
3. **Packing slip must accompany each delivery showing purchase order, catalog number, serial number and description.**
4. **No changes without written authorization from purchasing.**
5. **If freight charges are applicable, prepay and add to invoice. No C.O.D. charges permitted.**
6. **All vendors/manufacturers representatives must send manufacturers safety data sheet (OSHA Form 20 or equivalent) with shipment when applicable.**

SUB TOTAL	$ 300,000.00
SALES TAX	$ 0.00
SHIPPING	$ 0.00
TOTAL	$ 300,000.00

BURBANK UNIFIED SCHOOL DISTRICT

Approved By:

Peter Knapik

VENDOR COPY

PURCHASE ORDER

BURBANK UNIFIED SCHOOL DISTRICT

1900 WEST OLIVE AVE, BURBANK, CA 91506-2460
Phone: (818) 729-4400 Fax: (818) 729-4534

PURCHASE ORDER NO.
26001253
Show this number on invoices, packages and correspondence.

VENDOR

AMAZON CAPITAL SERVICES
PO BOX 035184
SEATTLE, WA 98124-5184

Phone: (206) 435-3958 **Fax:**

SHIP TO

BURBANK UNIFIED SCHOOL DISTRICT
PROVIDENCIA ELEMENTARY
1919 N. ONTARIO ST.
BURBANK, CA 91505-1231

For: PROVIDENCIA ELEMENTARY
P. REINOSO/Prop 28 Blanket

PO Date: 10/09/2025 **Deliver By:** 10/09/2025 **Buyer Name:** Maro Bojolyan

ITEM NO.	QTY ORDERED	UNIT OF ISSUE	DESCRIPTION	UNIT PRICE	AMOUNT
1	1	CO	CHANGE ORDER #1: INCREASE P.O. # 26001253 BY $1,500.00 FOR A REVISED TOTAL OF $3,000.00 DUE TO NEED FOR MORE PURCHASES, AS PER R0003979. **********	1,500.00	1,500.00
2	1	LOT	>>> 2025 - 2026 BLANKET ORDER <<< BLANKET ORDER TO COVER THE COST OF SUPPLIES AND MATERIALS, NOT EQUIPMENT, TO BE ORDERED ONLINE ON AN "AS NEEDED" BASIS, EFFECTIVE 7/1/2025 THROUGH 6/30/2026. TOTAL AMOUNT OF THIS ORDER IS NOT TO EXCEED $1500 (INCLUDING TAX & SHIPPING) ALL ORDERS TO BE DELIVERED, MONDAY-FRIDAY, 8:00 AM TO 4:00 PM, TO PROVIDENCIA ELEMENTARY ATTN: PATTI REINOSO 1919 N. ONTARIO STREET BURBANK, CA 91505 INSTRUCTIONS TO AMAZON USER: SELECT BLANKET PO 26001253 WHEN CHECKING OUT A CART ON AMAZON. UPON RECEIPT OF THE ORDER, COMPLETE A RECEIVING REPORT AND SUBMIT TO ACCOUNTS PAYABLE. IF YOU DO NOT LOCATE A PACKING LIST, PLEASE GO TO THE	1,500.00	1,500.00

SUB TOTAL	$ 3,000.00
SALES TAX	$ 0.00
SHIPPING	$ 0.00
TOTAL	$ 3,000.00

Vendor Instructions:

1. **Show purchase order number on all invoices, shipping papers and correspondence.**
2. **Mail invoice in duplicate Attn: Accounts Payable, at the above address.**
3. **Packing slip must accompany each delivery showing purchase order, catalog number, serial number and description.**
4. **No changes without written authorization from purchasing.**
5. **If freight charges are applicable, prepay and add to invoice. No C.O.D. charges permitted.**
6. **All vendors/manufacturers representatives must send manufacturers safety data sheet (OSHA Form 20 or equivalent) with shipment when applicable.**

BURBANK UNIFIED SCHOOL DISTRICT

Approved By:

Peter Knapik

VENDOR COPY

PURCHASE ORDER

BURBANK UNIFIED SCHOOL DISTRICT

1900 WEST OLIVE AVE, BURBANK, CA 91506-2460
Phone: (818) 729-4400 Fax: (818) 729-4534

PURCHASE ORDER NO.
26001314
Show this number on invoices, packages and correspondence.

VENDOR

AMAZON CAPITAL SERVICES
PO BOX 035184
SEATTLE, WA 98124-5184

Phone: (206) 435-3958 **Fax:**

SHIP TO

BURBANK UNIFIED SCHOOL DISTRICT
LUTHER BURBANK MIDDLE SCHOOL
3700 W. JEFFRIES AVE.
BURBANK, CA 91505-1896

For: LUTHER BURBANK MIDDLE SCHOOL
SAL J.

PO Date: 10/13/2025 **Deliver By:** 10/13/2025 **Buyer Name:** Maro Bojolyan

ITEM NO.	QTY ORDERED	UNIT OF ISSUE	DESCRIPTION	UNIT PRICE	AMOUNT
1	1	CO	CHANGE ORDER #4: INCREASE P.O. # 26001314 BY $2000.00 FOR A REVISED TOTAL OF $11170.00 DUE TO INCREASED PURCHASES FROM THE SITE, MORE AVAILABILITY, AND AVAILABILITY ON AMAZON, AS PER R0003731. **********	2,000.00	2,000.00
2	1	CO	CHANGE ORDER #3: INCREASE P.O. # 26001314 BY $4,000.00 FOR A REVISED TOTAL OF $13,170.00 DUE TO INCREASED PURCHASES FROM THE SITE, MORE AVAILABILITY, AND AVAILABILITY ON AMAZON AS PER R0003815. **********	4,000.00	4,000.00
3	1	CO	CHANGE ORDER #2: INCREASE P.O. # 26001314 BY $2670.00 FOR A REVISED TOTAL OF $9,170.00 DUE TO INCREASE IN SCHOOL DEPT USE OF AMAZON, AS PER R0003275. **********	2,670.00	2,670.00
4	1	CO	CHANGE ORDER #1: INCREASE P.O. # 26001314 BY $4000.00 FOR A REVISED TOTAL OF $6500.00 DUE TO INCREASE IN DEPT ORDERS FOR THE 2025/26 SCHOOL YEAR FROM AMAZON AS PREFERRED VENDOR, AS PER R0002677. **********	4,000.00	4,000.00
5	1	LOT	>>> 2025 - 2026 BLANKET ORDER <<< BLANKET ORDER TO COVER THE COST OF SUPPLIES AND MATERIALS, NOT EQUIPMENT, TO BE ORDERED ONLINE ON AN	2,500.00	2,500.00

Vendor Instructions:

1. **Show purchase order number on all invoices, shipping papers and correspondence.**
2. **Mail invoice in duplicate Attn: Accounts Payable, at the above address.**
3. **Packing slip must accompany each delivery showing purchase order, catalog number, serial number and description.**
4. **No changes without written authorization from purchasing.**
5. **If freight charges are applicable, prepay and add to invoice. No C.O.D. charges permitted.**
6. **All vendors/manufacturers representatives must send manufacturers safety data sheet (OSHA Form 20 or equivalent) with shipment when applicable.**

SUB TOTAL	$ 15,170.00
SALES TAX	$ 0.00
SHIPPING	$ 0.00
TOTAL	$ 15,170.00

BURBANK UNIFIED SCHOOL DISTRICT

Approved By:

Peter Knapik

VENDOR COPY

PURCHASE ORDER

BURBANK UNIFIED SCHOOL DISTRICT

1900 WEST OLIVE AVE, BURBANK, CA 91506-2460
Phone: (818) 729-4400 Fax: (818) 729-4534

PURCHASE ORDER NO.
26001377
Show this number on invoices, packages and correspondence.

SIGNAL HILL AUTO ENTERPRISES,

Vendor# 403430

VENDOR

SIGNAL HILL AUTO ENTERPRISES, INC.
dba SUPPLY SOLUTIONS
2330 ARTESIA AVENUE, UNIT B
FULLERTON, CA 92833

Phone: (888) 901-5011 **Fax:**

SHIP TO

BURBANK UNIFIED SCHOOL DISTRICT
FACILITIES SERVICES
510 S. SHELTON STREET
BURBANK, CA 91506-2818

For: FACILITIES SERVICES
HOY/JOHN M. URIBE

PO Date: 10/22/2025 **Requested Delivery:** 07/01/2025 **Buyer Name:** Terri Harvey **Req#** R0001547

ITEM NO.	QTY ORDERED	UNIT OF ISSUE	DESCRIPTION	UNIT PRICE	AMOUNT
1	1	CO	CHANGE ORDER #1: INCREASE BY $12,000.00 FOR A REVISED TOTAL OF $72,000.00 AS PER REQ R0003927 NEED FOR ADDITIONAL SUPPLIES FOR SUMMER CLEANING **********	12,000.00	12,000.00
2	1	EA	>>> 2025 - 2026 BLANKET ORDER <<< BLANKET ORDER TO COVER THE COST OF CUSTODIAL SUPPLIES TO BE PURCHASED BY FACILITIES SERVICES ON AN "AS NEEDED" BASIS FROM JULY 1, 2025 THROUGH JUNE 30, 2026. NOT TO EXCEED $60,000 INCLUDING TAXES AND SHIPPING REFERENCE THE P.O. NUMBER ON ALL RECEIPTS, PACKING LISTS AND INVOICES.	60,000.00	60,000.00

ACCOUNT NUMBER	AMOUNT
010-00100-0-00000-82100-4310-752-0000-0000	$72,000.00

(A)	SHIPMENT	DATE
(B)	SHIPMENT	DATE
(C)	SHIPMENT	DATE
(D)	SHIPMENT	DATE
(E)	SHIPMENT	DATE

SUB TOTAL	$ 72,000.00
SALES TAX	$ 0.00
SHIPPING	$ 0.00
TOTAL	$ 72,000.00

BURBANK UNIFIED SCHOOL DISTRICT

Approved By:

PURCHASING COPY

PURCHASE ORDER

BURBANK UNIFIED SCHOOL DISTRICT

1900 WEST OLIVE AVE, BURBANK, CA 91506-2460
Phone: (818) 729-4400 Fax: (818) 729-4534

PURCHASE ORDER NO.
26001475
Show this number on invoices, packages and correspondence.

VENDOR

AMAZON CAPITAL SERVICES
PO BOX 035184
SEATTLE, WA 98124-5184

Phone: (206) 435-3958 **Fax:**

SHIP TO

BURBANK UNIFIED SCHOOL DISTRICT
EMERSON ELEMENTARY
720 E. CYPRESS AVE.
BURBANK, CA 91501-1898

For: EMERSON ELEMENTARY
MAUREEN/AMAZON BLANKET FOR FC FUNDS

PO Date: 10/31/2025 **Deliver By:** 10/31/2025 **Buyer Name:** Maro Bojolyan

ITEM NO.	QTY ORDERED	UNIT OF ISSUE	DESCRIPTION	UNIT PRICE	AMOUNT
1	1	CO	CHANGE ORDER #3: INCREASE P.O. # 26001475 BY $1,000.00 FOR A REVISED TOTAL OF $5,000.00 DUE TO NEED OF MORE SUPPLIES, AS PER R0003875. ********** CHANGE ORDER #2: INCREASE P.O. # 26001475 BY $1000.00 FOR A REVISED TOTAL OF $4,000.00 DUE TO NEED FOR MORE SUPPLES,AS PER R0003290. ********** CHANGE ORDER #1: INCREASE BY $2000.00 FOR A REVISED TOTAL OF $3,000.00 DUE TO NEEDING TO PURCHASE ITEMS FOR EMERSON, AS PER R0002268. ********** >>> 2025 - 2026 BLANKET ORDER <<< BLANKET ORDER TO COVER THE COST OF SUPPLIES AND MATERIALS, NOT EQUIPMENT, TO BE ORDERED ONLINE ON AN "AS NEEDED" BASIS, EFFECTIVE 10/30/2025 THROUGH 6/30/2026. TOTAL AMOUNT OF THIS ORDER IS NOT TO EXCEED $1,000.00 (INCLUDING TAX & SHIPPING) ALL ORDERS TO BE DELIVERED, MONDAY-FRIDAY, 8:00 AM TO 3:00 PM, TO EMERSON	1,000.00	1,000.00
2	1	CO		1,000.00	1,000.00
3	1	CO		2,000.00	2,000.00
4	1	LOT		1,000.00	1,000.00

Vendor Instructions:

1. **Show purchase order number on all invoices, shipping papers and correspondence.**
2. **Mail invoice in duplicate Attn: Accounts Payable, at the above address.**
3. **Packing slip must accompany each delivery showing purchase order, catalog number, serial number and description.**
4. **No changes without written authorization from purchasing.**
5. **If freight charges are applicable, prepay and add to invoice. No C.O.D. charges permitted.**
6. **All vendors/manufacturers representatives must send manufacturers safety data sheet (OSHA Form 20 or equivalent) with shipment when applicable.**

SUB TOTAL	$ 5,000.00
SALES TAX	$ 0.00
SHIPPING	$ 0.00
TOTAL	$ 5,000.00

BURBANK UNIFIED SCHOOL DISTRICT

Approved By:

Peter Knapik

VENDOR COPY

PURCHASE ORDER

BURBANK UNIFIED SCHOOL DISTRICT

1900 WEST OLIVE AVE, BURBANK, CA 91506-2460
Phone: (818) 729-4400 Fax: (818) 729-4534

PURCHASE ORDER NO.
26001612
Show this number on invoices, packages and correspondence.

VENDOR

GTG TRANSPORTATION
PO BOX 920331
SYLMAR, CA 91392

Phone: (844) 484-2871 **Fax:**

SHIP TO

BURBANK UNIFIED SCHOOL DISTRICT
BURBANK HIGH SCHOOL
902 N. THIRD ST.
BURBANK, CA 91502-1091

For: BURBANK HIGH SCHOOL
AllisonAllison McKain; BHS ATHLETICS TRANSPORT/

PO Date: 11/18/2025 **Deliver By:** 07/01/2025 **Buyer Name:** Terri Harvey

ITEM NO.	QTY ORDERED	UNIT OF ISSUE	DESCRIPTION	UNIT PRICE	AMOUNT
1	1	CO	CHANGE ORDER #1: INCREASE BY $30,000.00 FOR A REVISED TOTAL OF $100,000.00 AS PER REQ R0003884	30,000.00	30,000.00
			**********		
2	1	LOT	>>> 2025 - 2026 BLANKET ORDER <<< BLANKET ORDER TO COVER THE COSTS OF BUS RENTALS FOR STUDENT-ATHLETE TRANSPORTATION. PERSONS AUTHORIZED TO ORDER THESE BUSES ARE: Alli McKain, Athletic Director EFFECTIVE JULY 1, 2025, THROUGH JUNE 30, 2026 NOT TO EXCEED: $70,0000 *** SPECIAL INSTRUCTIONS *** * ANY VEHICLE USED FOR STUDENT TRANSPORTATION MUST BE A SCHOOL BUS OR A SPAB-CERTIFIED VEHICLE. THE SPAB CERTIFICATION FOR BOTH THE VEHICLE AND DRIVER MUST BE AVAILABLE FOR INSPECTION. * CURRENT CERTIFICATE OF LIABILITY INSURANCE ON FILE IN PURCHASING SERVICES. * VENDOR: FOR PROMPT PAYMENT, BILL TO: APINVOICES@BURBANKUSD.ORG * PLEASE NOTE: WE ARE NO LONGER ACCEPTING	70,000.00	70,000.00

Vendor Instructions:

1. **Show purchase order number on all invoices, shipping papers and correspondence.**
2. **Mail invoice in duplicate Attn: Accounts Payable, at the above address.**
3. **Packing slip must accompany each delivery showing purchase order, catalog number, serial number and description.**
4. **No changes without written authorization from purchasing.**
5. **If freight charges are applicable, prepay and add to invoice. No C.O.D. charges permitted.**
6. **All vendors/manufacturers representatives must send manufacturers safety data sheet (OSHA Form 20 or equivalent) with shipment when applicable.**

SUB TOTAL	$ 100,000.00
SALES TAX	$ 0.00
SHIPPING	$ 0.00
TOTAL	$ 100,000.00

BURBANK UNIFIED SCHOOL DISTRICT

Approved By:

VENDOR COPY

PURCHASE ORDER

BURBANK UNIFIED SCHOOL DISTRICT

1900 WEST OLIVE AVE, BURBANK, CA 91506-2460
Phone: (818) 729-4400 Fax: (818) 729-4534

PURCHASE ORDER NO.
26001709
Show this number on invoices, packages and correspondence.

VENDOR

AMAZON CAPITAL SERVICES
PO BOX 035184
SEATTLE, WA 98124-5184

Phone: (206) 435-3958 **Fax:**

SHIP TO

BURBANK UNIFIED SCHOOL DISTRICT
WASHINGTON ELEMENTARY
2322 N. LINCOLN ST.
BURBANK, CA 91504-2625

For: WASHINGTON ELEMENTARY
C. DOOMANIS/CD/Vinyard - PFC Supplies Blanket

PO Date: 11/26/2025 **Deliver By:** 11/26/2025 **Buyer Name:** Maro Bojolyan

ITEM NO.	QTY ORDERED	UNIT OF ISSUE	DESCRIPTION	UNIT PRICE	AMOUNT
1	1	CO	CHANGE ORDER #3: INCREASE BY $1000.00 FOR A REVISED TOTAL OF $2690.00 DUE TO NEED FOR ADDITIONAL SUPPLIES. **********	1,000.00	1,000.00
2	1	CO	CHANGE ORDER #2: INCREASE P.O. # 26001709 BY $1,300.00 FOR A REVISED TOTAL OF $1690.00 DUE TO supplies needed for fundraising and upcoming events. PFC meeting minute approvals attached, AS PER R0003565. **********	1,300.00	1,300.00
3	1	CO	CHANGE ORDER #1: INCREASE BY $40.00 FOR A REVISED TOTAL OF $390.00 AS PER R0002184. NEED ADDITIONAL FUNDRAISER SUPPLIES **********	40.00	40.00
4	1	LOT	>>> 2025 - 2026 BLANKET ORDER <<< BLANKET ORDER TO COVER THE COST OF SUPPLIES AND MATERIALS, NOT EQUIPMENT, TO BE ORDERED ONLINE ON AN "AS NEEDED" BASIS, EFFECTIVE 7/1/2025 THROUGH 6/30/2026. TOTAL AMOUNT OF THIS ORDER IS NOT TO EXCEED $350.00 (INCLUDING TAX & SHIPPING) ALL ORDERS TO BE DELIVERED, MONDAY-FRIDAY, 8:00 AM TO 3:00 PM, TO	350.00	350.00

Vendor Instructions:

1. **Show purchase order number on all invoices, shipping papers and correspondence.**
2. **Mail invoice in duplicate Attn: Accounts Payable, at the above address.**
3. **Packing slip must accompany each delivery showing purchase order, catalog number, serial number and description.**
4. **No changes without written authorization from purchasing.**
5. **If freight charges are applicable, prepay and add to invoice. No C.O.D. charges permitted.**
6. **All vendors/manufacturers representatives must send manufacturers safety data sheet (OSHA Form 20 or equivalent) with shipment when applicable.**

SUB TOTAL	$ 2,690.00
SALES TAX	$ 0.00
SHIPPING	$ 0.00
TOTAL	$ 2,690.00

BURBANK UNIFIED SCHOOL DISTRICT

Approved By:

Peter Knapik

VENDOR COPY

PURCHASE ORDER

BURBANK UNIFIED SCHOOL DISTRICT

1900 WEST OLIVE AVE, BURBANK, CA 91506-2460
Phone: (818) 729-4400 Fax: (818) 729-4534

PURCHASE ORDER NO.
26001769
Show this number on invoices, packages and correspondence.

VENDOR

RIVERSIDE INSIGHTS
P.O. BOX 7410058
CHICAGO, IL 60674-5058

Phone: (800) 323-9540 **Fax:** (630) 467-7192

SHIP TO

BURBANK UNIFIED SCHOOL DISTRICT
INSTRUCTIONAL SERVICES
1900 WEST OLIVE AVE
BURBANK, CA 91506-2460

For: INSTRUCTIONAL SERVICES
BEAUREGARD/ANDERS/INSTRUCTION

PO Date: 12/08/2025 **Deliver By:** 12/10/2025 **Buyer Name:** Maro Bojolyan

ITEM NO.	QTY ORDERED	UNIT OF ISSUE	DESCRIPTION	UNIT PRICE	AMOUNT
1	1	CO	CHANGE ORDER #1: INCREASE PO 26001769 BY $509.35 FOR A REVISED TOTAL OF $21,844.35 DUE TO USING MORE TESTS THAT ORIGINALLY ANTICIPATED. ********** 20000222526 COGNITIVE ABILITIES TEST (CogAT) SCREENING FORM 8 ONLINE TESTING LEVELS 5/6-17/18 START DATE 7/1/2025 END DATE 6/30/2026	509.35	509.35
2	1400	EA		13.45	18,830.00
3	300	EA	20000232526 COGNITIVE ABILITIES TEST (CogAT) POST SCREENER FORM 8 ONLINE TESTING LEVELS 5/6-17/18 START DATE 7/1/2025 END DATE 6/30/2026 ********** 12/8/25 ORDERED ONLINE ORDER #: 129990 * THE END USER FOR DIGITAL PRODUCTS IS: Robyn Anders <RobynAnders@burbankusd.org> *** SPECIAL INSTRUCTIONS *** * VENDOR: FOR PROMPT PAYMENT, BILL TO: APINVOICES@BURBANKUSD.ORG * PLEASE NOTE: WE ARE NO LONGER ACCEPTING HARD COPY INVOICES SENT BY MAIL	8.35	2,505.00

Vendor Instructions:

1. **Show purchase order number on all invoices, shipping papers and correspondence.**
2. **Mail invoice in duplicate Attn: Accounts Payable, at the above address.**
3. **Packing slip must accompany each delivery showing purchase order, catalog number, serial number and description.**
4. **No changes without written authorization from purchasing.**
5. **If freight charges are applicable, prepay and add to invoice. No C.O.D. charges permitted.**
6. **All vendors/manufacturers representatives must send manufacturers safety data sheet (OSHA Form 20 or equivalent) with shipment when applicable.**

SUB TOTAL	$ 21,844.35
SALES TAX	$ 0.00
SHIPPING	$ 0.00
TOTAL	$ 21,844.35

BURBANK UNIFIED SCHOOL DISTRICT

Approved By:

Peter Knapik

VENDOR COPY

PURCHASE ORDER

BURBANK UNIFIED SCHOOL DISTRICT

1900 WEST OLIVE AVE, BURBANK, CA 91506-2460
Phone: (818) 729-4400 Fax: (818) 729-4534

PURCHASE ORDER NO.
26001778
Show this number on invoices, packages and correspondence.

VENDOR

Peter Knapik

AMAZON CAPITAL SERVICES
PO BOX 035184
SEATTLE, WA 98124-5184

Phone: (206) 435-3958 **Fax:**

SHIP TO

BURBANK UNIFIED SCHOOL DISTRICT
JEFFERSON ELEMENTARY
1900 N. SIXTH ST.
BURBANK, CA 91504-2999

For: JEFFERSON ELEMENTARY
Y. DIAZ/Ron Young - Principal Tittle III EL

PO Date: 12/09/2025 **Deliver By:** 12/09/2025 **Buyer Name:** Maro Bojolyan

ITEM NO.	QTY ORDERED	UNIT OF ISSUE	DESCRIPTION	UNIT PRICE	AMOUNT
1	1	CO	CHANGE ORDER #2: INCREASE P.O. #26001778 BY $100.00 FOR A REVISED TOTAL OF $2,600.00 DUE TO NEED MORE FUND TO PURCHASE MORE MATERIALS AND SUPPLIES, AS PER R0003404. **********	100.00	100.00
2	1	CO	CHANGE ORDER #1: INCREASE P.O. #26001778 BY $1,000.00 FOR A REVISED TOTAL OF $2,500.00 DUE TO NEED MORE FUNDS TO PURCHASE MATERIALS AND SUPPLIES, AS PER R0003249. **********	1,000.00	1,000.00
3	1	LOT	>>> 2025 - 2026 BLANKET ORDER <<< BLANKET ORDER TO COVER THE COST OF SUPPLIES AND MATERIALS, NOT EQUIPMENT, TO BE ORDERED ONLINE ON AN "AS NEEDED" BASIS, EFFECTIVE 7/1/2025 THROUGH 6/30/2025 TOTAL AMOUNT OF THIS ORDER IS NOT TO EXCEED $1,500.00 (INCLUDING TAX & SHIPPING) ALL ORDERS TO BE DELIVERED, MONDAY-FRIDAY, 8:00 AM TO 3:00 PM, TO JEFFERSON ELEMENTARY ATTN: YAYA 1900 NORTH SIXTH STREET BURBANK, CA 91504 INSTRUCTIONS TO AMAZON USER:	1,500.00	1,500.00

Vendor Instructions:

1. **Show purchase order number on all invoices, shipping papers and correspondence.**
2. **Mail invoice in duplicate Attn: Accounts Payable, at the above address.**
3. **Packing slip must accompany each delivery showing purchase order, catalog number, serial number and description.**
4. **No changes without written authorization from purchasing.**
5. **If freight charges are applicable, prepay and add to invoice. No C.O.D. charges permitted.**
6. **All vendors/manufacturers representatives must send manufacturers safety data sheet (OSHA Form 20 or equivalent) with shipment when applicable.**

SUB TOTAL	$ 2,600.00
SALES TAX	$ 0.00
SHIPPING	$ 0.00
TOTAL	$ 2,600.00

BURBANK UNIFIED SCHOOL DISTRICT

Approved By:

Peter Knapik

VENDOR COPY

PURCHASE ORDER

BURBANK UNIFIED SCHOOL DISTRICT

1900 WEST OLIVE AVE, BURBANK, CA 91506-2460
Phone: (818) 729-4400 Fax: (818) 729-4534

PURCHASE ORDER NO.
26002103
Show this number on invoices, packages and correspondence.

VENDOR

AMAZON CAPITAL SERVICES
PO BOX 035184
SEATTLE, WA 98124-5184

Phone: (206) 435-3958 **Fax:**

SHIP TO

BURBANK UNIFIED SCHOOL DISTRICT
LUTHER BURBANK MIDDLE SCHOOL
3700 W. JEFFRIES AVE.
BURBANK, CA 91505-1896

For: LUTHER BURBANK MIDDLE SCHOOL
SAL J.

PO Date: 01/20/2026 **Deliver By:** 01/20/2026 **Buyer Name:** Maro Bojolyan

ITEM NO.	QTY ORDERED	UNIT OF ISSUE	DESCRIPTION	UNIT PRICE	AMOUNT
1	1	CO	CHANGE ORDER #2: INCREASE P.O. # 26002103 BY $5000.00 FOR A REVISED TOTAL OF $11,000 DUE TO INCREASED PURCHASES FOR T1 RELATED ITEMS & MORE AVAILABILITY ON AMAZON, AS PER R0003728. **********	5,000.00	5,000.00
2	1	CO	CHANGE ORDER #1: INCREASE P.O. # 26002103 BY $5000.00 FOR A REVISED TOTAL OF $6000.00 DUE TO INCREASE IN USE OF AMAZON BY TITLE COORDINATOR AND TEACHERS, AS PER R0003566. **********	5,000.00	5,000.00
3	1	LOT	>>> 2025 - 2026 BLANKET ORDER <<< BLANKET ORDER TO COVER THE COST OF SUPPLIES AND MATERIALS, NOT EQUIPMENT, TO BE ORDERED ONLINE ON AN "AS NEEDED" BASIS, EFFECTIVE 1/1/2026 THROUGH 6/30/2026. TOTAL AMOUNT OF THIS ORDER IS NOT TO EXCEED $1000.00 (INCLUDING TAX & SHIPPING) ALL ORDERS TO BE DELIVERED, MONDAY-FRIDAY, 8:00 AM TO 4:00 PM, TO LUTHER BURBANK MIDDLE SCHOOL ATTN: SAL JIMENEZ 3700 WEST JEFFRIES AVE BURBANK, CA 91505	1,000.00	1,000.00

Vendor Instructions:

1. **Show purchase order number on all invoices, shipping papers and correspondence.**
2. **Mail invoice in duplicate Attn: Accounts Payable, at the above address.**
3. **Packing slip must accompany each delivery showing purchase order, catalog number, serial number and description.**
4. **No changes without written authorization from purchasing.**
5. **If freight charges are applicable, prepay and add to invoice. No C.O.D. charges permitted.**
6. **All vendors/manufacturers representatives must send manufacturers safety data sheet (OSHA Form 20 or equivalent) with shipment when applicable.**

SUB TOTAL	$ 11,000.00
SALES TAX	$ 0.00
SHIPPING	$ 0.00
TOTAL	$ 11,000.00

BURBANK UNIFIED SCHOOL DISTRICT

Approved By:

Peter Knapik

VENDOR COPY

PURCHASE ORDER

BURBANK UNIFIED SCHOOL DISTRICT

1900 WEST OLIVE AVE, BURBANK, CA 91506-2460
Phone: (818) 729-4400 Fax: (818) 729-4534

PURCHASE ORDER NO.
26002126
Show this number on invoices, packages and correspondence.

VENDOR

LINGUABEE LLC
1550 LARIMER STREET # 503
DENVER, CO 80202

Phone: (303) 872-9525 **Fax:**

SHIP TO

BURBANK UNIFIED SCHOOL DISTRICT
PERSONNEL SERVICES
1900 WEST OLIVE ST.
BURBANK, CA 91506-2460

For: PERSONNEL SERVICES
L. TRAMMEL/HUMAN RESOURCES SERVICES

PO Date: 01/21/2026 **Deliver By:** 09/28/2025 **Buyer Name:** Maro Bojolyan

ITEM NO.	QTY ORDERED	UNIT OF ISSUE	DESCRIPTION	UNIT PRICE	AMOUNT
1	1	CO	CHANGE ORDER #2: INCREASE P.O. # 26002126 BY $5,000.00 FOR A REVISED TOTAL OF $ 8,000.00 DUE TO PROVIDING INTERPRETING SERVICES TO OUR EMPLOYEES, AS PER R0003912. BOARD APPROVED 6/4/26 **********	5,000.00	5,000.00
2	1	CO	CHANGE ORDER #1: INCREASE BY $1,000.00 FOR A REVISED TOTAL OF $3,000.00 DUE TO THE NEED TO PAY INVOICES FOR INTERPRETING SERVICES, R0002941. BOARD APPROVED: 6/4/26 **********	1,000.00	1,000.00
3	1	LOT	AGREEMENT BETWEEN THE BURBANK UNIFIED SCHOOL DISTRICT AND LINGUABEE LLC, CONSULTANT, FOR THE FOLLOWING SERVICES: PROVIDING DHH INTERPRETING SERVICES FOR SPECIAL EDUCATION STAFF CONSULTANT AGREES TO PERFORM SERVICES FOR A TOTAL NOT TO EXCEED $2,000.00. PAYMENTS TO BE MADE ACCORDING TO THE FOLLOWING SCHEDULE: _X__ MULTIPLE PAYMENTS BILLING MONTHLY	2,000.00	2,000.00

Vendor Instructions:

1. **Show purchase order number on all invoices, shipping papers and correspondence.**
2. **Mail invoice in duplicate Attn: Accounts Payable, at the above address.**
3. **Packing slip must accompany each delivery showing purchase order, catalog number, serial number and description.**
4. **No changes without written authorization from purchasing.**
5. **If freight charges are applicable, prepay and add to invoice. No C.O.D. charges permitted.**
6. **All vendors/manufacturers representatives must send manufacturers safety data sheet (OSHA Form 20 or equivalent) with shipment when applicable.**

SUB TOTAL	$ 8,000.00
SALES TAX	$ 0.00
SHIPPING	$ 0.00
TOTAL	$ 8,000.00

BURBANK UNIFIED SCHOOL DISTRICT

Approved By:

Peter Knapik

VENDOR COPY

PURCHASE ORDER

BURBANK UNIFIED SCHOOL DISTRICT

1900 WEST OLIVE AVE, BURBANK, CA 91506-2460
Phone: (818) 729-4400 Fax: (818) 729-4534

PURCHASE ORDER NO.
26002169
Show this number on invoices, packages and correspondence.

VENDOR

AMAZON CAPITAL SERVICES
PO BOX 035184
SEATTLE, WA 98124-5184

Phone: (206) 435-3958 **Fax:**

SHIP TO

BURBANK UNIFIED SCHOOL DISTRICT
LUTHER BURBANK MIDDLE SCHOOL
3700 W. JEFFRIES AVE.
BURBANK, CA 91505-1896

For: LUTHER BURBANK MIDDLE SCHOOL
SAL J.

PO Date: 01/26/2026 **Deliver By:** 01/26/2026 **Buyer Name:** Maro Bojolyan

ITEM NO.	QTY ORDERED	UNIT OF ISSUE	DESCRIPTION	UNIT PRICE	AMOUNT
1	1	CO	CHANGE ORDER #2: INCREASE P.O. # 26002169 BY $2,000.00 FOR A REVISED TOTAL OF $8,000.00 DUE TO (INCREASED PURCHASES FROM ARTS CLASSROOMS & MORE AVAILABILITY ON AMAZON, AS PER R0003729. ********** ORDER UPDATE: ADDED 2ND ACCT STRING **********	2,000.00	2,000.00
2	1	CO	CHANGE ORDER #1: INCREASE P.O. # 26002169 BY $5,000.00 FOR A REVISED TOTAL OF $6,000.00 DUE TO INCREASE IN USE OF AMAZON FOR PROP 28 PURCHASES BY ELECTIVE ARTS CLASSES, AS PER R0003344. **********	5,000.00	5,000.00
3	1	LOT	>>> 2025 - 2026 BLANKET ORDER <<< BLANKET ORDER TO COVER THE COST OF SUPPLIES AND MATERIALS, NOT EQUIPMENT, TO BE ORDERED ONLINE ON AN "AS NEEDED" BASIS, EFFECTIVE 7/1/2025 THROUGH 6/30/2026. TOTAL AMOUNT OF THIS ORDER IS NOT TO EXCEED $1000.00 (INCLUDING TAX & SHIPPING) ALL ORDERS TO BE DELIVERED, MONDAY-FRIDAY, 8:00 AM TO 4:00 PM, TO LUTHER BURBANK MIDDLE SCHOOL	1,000.00	1,000.00

Vendor Instructions:

1. **Show purchase order number on all invoices, shipping papers and correspondence.**
2. **Mail invoice in duplicate Attn: Accounts Payable, at the above address.**
3. **Packing slip must accompany each delivery showing purchase order, catalog number, serial number and description.**
4. **No changes without written authorization from purchasing.**
5. **If freight charges are applicable, prepay and add to invoice. No C.O.D. charges permitted.**
6. **All vendors/manufacturers representatives must send manufacturers safety data sheet (OSHA Form 20 or equivalent) with shipment when applicable.**

SUB TOTAL	$ 8,000.00
SALES TAX	$ 0.00
SHIPPING	$ 0.00
TOTAL	$ 8,000.00

BURBANK UNIFIED SCHOOL DISTRICT

Approved By:

Peter Knapik

VENDOR COPY

PURCHASE ORDER

BURBANK UNIFIED SCHOOL DISTRICT

1900 WEST OLIVE AVE, BURBANK, CA 91506-2460
Phone: (818) 729-4400 Fax: (818) 729-4534

PURCHASE ORDER NO.
26002593
Show this number on invoices, packages and correspondence.

VENDOR

GUITAR CENTER
PO BOX 5111
WESTLAKE VILLAGE, CA 91359

Phone: (818) 993-0286 **Fax:** (818) 993-0287

SHIP TO

BURBANK UNIFIED SCHOOL DISTRICT
WAREHOUSE
510 S. SHELTON ST.
BURBANK, CA 91506-2818

For: DOLORES HUERTA MIDDLE SCHOOL
PETRIE/LAMB/LURIE/DIAZ/FLYNN/GONZALEZ

PO Date: 03/10/2026 **Deliver By:** 03/25/2026 **Buyer Name:** Maro Bojolyan

ITEM NO.	QTY ORDERED	UNIT OF ISSUE	DESCRIPTION	UNIT PRICE	AMOUNT
		CO	CHANGE ORDER #1: ADD ITEM #3; CANCEL ITEM #2 **********		
1	1	EACH	119813327 CREMONA SB2 1/2 SB2 PREM STUDENT SER BASS OUTFIT 1/2 OUTFIT ASSET TAG (WHITE) #: _____ S/N: _____ ROOM #: _____	1,125.00	1,125.00
		EACH	* CANCEL * 1500000478050 MUSSER MSPX535 STUDIO SER 3.5 PADAUK XYLOPHONE 3.5 OCTAVE	2,144.00	0.00
2	1	EACH	* ADD * Musser M51 Concert Frame Pro-Portable Kelon ASSET TAG (WHITE) #: _____ S/N: _____ ROOM #: _____	2,950.00	2,950.00
			********** REFERENCE QUOTE #: 00252896, WITH SHIPPING ADDRESS AND BILLING INFO AS INDICATED ON THIS PO *** SPECIAL INSTRUCTIONS *** * VENDOR: FOR PROMPT PAYMENT, BILL TO: APINVOICES@BURBANKUSD.ORG * PLEASE NOTE: WE ARE NO LONGER ACCEPTING HARD COPY INVOICES SENT BY MAIL		

Vendor Instructions:

1. **Show purchase order number on all invoices, shipping papers and correspondence.**
2. **Mail invoice in duplicate Attn: Accounts Payable, at the above address.**
3. **Packing slip must accompany each delivery showing purchase order, catalog number, serial number and description.**
4. **No changes without written authorization from purchasing.**
5. **If freight charges are applicable, prepay and add to invoice. No C.O.D. charges permitted.**
6. **All vendors/manufacturers representatives must send manufacturers safety data sheet (OSHA Form 20 or equivalent) with shipment when applicable.**

SUB TOTAL	$ 4,075.00
SALES TAX	$ 427.88
SHIPPING	$ 0.00
TOTAL	$ 4,502.88

BURBANK UNIFIED SCHOOL DISTRICT

Approved By:

Peter Knapik

VENDOR COPY

PURCHASE ORDER

BURBANK UNIFIED SCHOOL DISTRICT

1900 WEST OLIVE AVE, BURBANK, CA 91506-2460
Phone: (818) 729-4400 Fax: (818) 729-4534

PURCHASE ORDER NO.
26003007
Show this number on invoices, packages and correspondence.

VENDOR

FOLLETT CONTENT SOLUTIONS LLC
1340 RIDGEVIEW DRIVE
MCHENRY, IL 60050

Phone: (877) 899-8550 **Fax:** (818)

SHIP TO

BURBANK UNIFIED SCHOOL DISTRICT
BURBANK HIGH SCHOOL
902 N. THIRD ST.
BURBANK, CA 91502-1091

For: BURBANK HIGH SCHOOL
R. ARMIYANTS/DIAZ/GOLDENBERG/BURBANK HS

PO Date: 04/20/2026 **Deliver By:** 05/04/2026 **Buyer Name:** Maro Bojolyan

ITEM NO.	QTY ORDERED	UNIT OF ISSUE	DESCRIPTION	UNIT PRICE	AMOUNT
		CO	CHANGE ORDER #1: CANCEL ITEM #4 **********		
1	1	EACH	Harvest House by Smith, Cynthia Leilich (#2625MAX) Hardcover - Candlewick Press, 2023	19.99	19.99
2	1	EACH	Hearts unbroken by Smith, Cynthia Leilich (#1479GY2) FollettBound Glued - Candlewick Press, 2020	18.24	18.24
3	1	EACH	Legendary Frybread Drive-In : intertribal stories (#2134YH0) Hardcover - Heartdrum, an imprint of HarperCollinsPublishers, 2025	19.99	19.99
		EACH	* CANCEL * The unfinished by Isaacs, Cheryl (#2549MF2) Hardcover - Heartdrum, an imprint of HarperCollinsPublishers, 2024	19.99	0.00
4	1	EACH	Book Processing	4.83	4.83
			********** REFERENCE QUOTE #: 11955768 *** SPECIAL INSTRUCTIONS *** * VENDOR: FOR PROMPT PAYMENT, BILL TO: APINVOICES@BURBANKUSD.ORG * PLEASE NOTE: WE ARE NO LONGER ACCEPTING HARD COPY INVOICES SENT BY MAIL * VENDOR NOTE: PLEASE SHIP DIRECTLY TO OUR SITE AS INDICATED. PLEASE BE SURE TO INCLUDE OUR PURCHASE ORDER NUMBER ON ALL BOXES AND PACKING SLIPS. ALL DELIVERIES WILL BE RECEIVED BETWEEN THE HOURS OF 8:00AM - 4:00PM.		

SUB TOTAL	$ 63.05
SALES TAX	$ 6.62
SHIPPING	$ 0.00
TOTAL	$ 69.67

Vendor Instructions:

1. **Show purchase order number on all invoices, shipping papers and correspondence.**
2. **Mail invoice in duplicate Attn: Accounts Payable, at the above address.**
3. **Packing slip must accompany each delivery showing purchase order, catalog number, serial number and description.**
4. **No changes without written authorization from purchasing.**
5. **If freight charges are applicable, prepay and add to invoice. No C.O.D. charges permitted.**
6. **All vendors/manufacturers representatives must send manufacturers safety data sheet (OSHA Form 20 or equivalent) with shipment when applicable.**

BURBANK UNIFIED SCHOOL DISTRICT

Approved By:

Peter Knapik

VENDOR COPY

PURCHASE ORDER

BURBANK UNIFIED SCHOOL DISTRICT

1900 WEST OLIVE AVE, BURBANK, CA 91506-2460
Phone: (818) 729-4400 Fax: (818) 729-4534

PURCHASE ORDER NO.
26003043
Show this number on invoices, packages and correspondence.

VENDOR

AMAZON CAPITAL SERVICES
PO BOX 035184
SEATTLE, WA 98124-5184

Phone: (206) 435-3958 **Fax:**

SHIP TO

BURBANK UNIFIED SCHOOL DISTRICT
BURBANK ADULT SCHOOL
3811 W. ALLAN AVE.
BURBANK, CA 91505-1897

For: BURBANK ADULT SCHOOL
C. HARTUNG/J. DYER/SPECIALED/WAI/LORI/NICHC

PO Date: 04/22/2026 **Deliver By:** 03/12/2026 **Buyer Name:** Maro Bojolyan

ITEM NO.	QTY ORDERED	UNIT OF ISSUE	DESCRIPTION	UNIT PRICE	AMOUNT
			CHANGE ORDER #1: RETURN ITEM #2 **********		
1	1	EA	Upstreman 11.6 Cu.Ft. Double Door Refrigerator in Stainless Steel with Large Capacity Top Freezer, Frost Free, Adjustable Thermostat Control, Apartment Refrigerator with Freezer, ENERGY STAR	674.49	674.49
		EA	ASSET TAG (WHITE) #: _____ S/N: _____ ROOM #: ___ * RETURN * Rangaire RRE303GS 30" Glass Touch Electric Range Oven - Stainless Steel, Infrared Stove Burners, True Convection, Self Cleaning, Easy Reach Racks	1,399.00	0.00
2	1	EA	ASSET TAG (WHITE) #: _____ S/N: _____ ROOM #: ___ Kenmore 24" Premium Hybrid Tub Dishwasher - UltraWash, MoreSpace Adjustable Rack, High Temp & SmartWash - 12 Place Settings - 54 DBA - ENERGY STAR Certified - Fingerprint Resistant Stainless Steel ASSET TAG (WHITE) #: _____ S/N: _____ ROOM #: ___ ********** 111-1758924-6997046 111-9323414-4824262 111-4617237-4399400 5/14 JERI D. PROCESSED A RETURN FOR ITEM #2	429.99	429.99

Vendor Instructions:

1. **Show purchase order number on all invoices, shipping papers and correspondence.**
2. **Mail invoice in duplicate Attn: Accounts Payable, at the above address.**
3. **Packing slip must accompany each delivery showing purchase order, catalog number, serial number and description.**
4. **No changes without written authorization from purchasing.**
5. **If freight charges are applicable, prepay and add to invoice. No C.O.D. charges permitted.**
6. **All vendors/manufacturers representatives must send manufacturers safety data sheet (OSHA Form 20 or equivalent) with shipment when applicable.**

SUB TOTAL	$ 1,104.48
SALES TAX	$ 115.97
SHIPPING	$ 0.00
TOTAL	$ 1,220.45

BURBANK UNIFIED SCHOOL DISTRICT

Approved By:

Peter Knapik

VENDOR COPY

PURCHASE ORDER

BURBANK UNIFIED SCHOOL DISTRICT

1900 WEST OLIVE AVE, BURBANK, CA 91506-2460
Phone: (818) 729-4400 Fax: (818) 729-4534

PURCHASE ORDER NO.
26003043
Show this number on invoices, packages and correspondence.

VENDOR

AMAZON CAPITAL SERVICES
PO BOX 035184
SEATTLE, WA 98124-5184

Phone: (206) 435-3958 **Fax:**

SHIP TO

BURBANK UNIFIED SCHOOL DISTRICT
BURBANK ADULT SCHOOL
3811 W. ALLAN AVE.
BURBANK, CA 91505-1897

For: BURBANK ADULT SCHOOL
C. HARTUNG/J. DYER/SPECIALED/WAI/LORI/NICHC

PO Date: 04/22/2026 **Deliver By:** 03/12/2026 **Buyer Name:** Maro Bojolyan

ITEM NO.	QTY ORDERED	UNIT OF ISSUE	DESCRIPTION	UNIT PRICE	AMOUNT
		CO	CHANGE ORDER #2: ADD ITEM # 5 **********		
		CO	CHANGE ORDER #1: RETURN ITEM #2 **********		
1	1	EA	Upstreman 11.6 Cu.Ft. Double Door Refrigerator in Stainless Steel with Large Capacity Top Freezer, Frost Free, Adjustable Thermostat Control, Apartment Refrigerator with Freezer, ENERGY STAR ASSET TAG (WHITE) #: _____ S/N: _____ ROOM #: ___	674.49	674.49
		EA	* RETURN * Rangaire RRE303GS 30" Glass Touch Electric Range Oven - Stainless Steel, Infrared Stove Burners, True Convection, Self Cleaning, Easy Reach Racks	1,399.00	0.00
2	1	EA	Kenmore 24" Premium Hybrid Tub Dishwasher - UltraWash, MoreSpace Adjustable Rack, High Temp & SmartWash - 12 Place Settings - 54 DBA - ENERGY STAR Certified - Fingerprint Resistant Stainless Steel ASSET TAG (WHITE) #: _____ S/N: _____ ROOM #: ___	429.99	429.99
3	1	EA	* ADD * Samsung 6.0 Cu. Ft. Smart Freestanding Gas Range with No Pre-heat Air Fry & Convection, Stainless Steel, NX60A6511SS/AA ASSET TAG (WHITE) #: _____ S/N: _____ ROOM #: ___ ********** 111-1758924-6997046	889.00	889.00

Vendor Instructions:

1. **Show purchase order number on all invoices, shipping papers and correspondence.**
2. **Mail invoice in duplicate Attn: Accounts Payable, at the above address.**
3. **Packing slip must accompany each delivery showing purchase order, catalog number, serial number and description.**
4. **No changes without written authorization from purchasing.**
5. **If freight charges are applicable, prepay and add to invoice. No C.O.D. charges permitted.**
6. **All vendors/manufacturers representatives must send manufacturers safety data sheet (OSHA Form 20 or equivalent) with shipment when applicable.**

SUB TOTAL	$ 1,993.48
SALES TAX	$ 209.32
SHIPPING	$ 0.00
TOTAL	$ 2,202.80

BURBANK UNIFIED SCHOOL DISTRICT

Approved By:

Peter Knapik

VENDOR COPY

PURCHASE ORDER

BURBANK UNIFIED SCHOOL DISTRICT

1900 WEST OLIVE AVE, BURBANK, CA 91506-2460
Phone: (818) 729-4400 Fax: (818) 729-4534

PURCHASE ORDER NO.
26003274
Show this number on invoices, packages and correspondence.

VENDOR

DICK BLICK CO
BLICK ART MATERIALS
P O BOX 1267
GALESBURG, IL 61402-1267

Phone: (800) 704-7744 **Fax:** (800) 621-8293

SHIP TO

BURBANK UNIFIED SCHOOL DISTRICT
JOHN BURROUGHS HIGH SCHOOL
1920 W. CLARK AVE.
BURBANK, CA 91506-1999

For: JOHN BURROUGHS HIGH SCHOOL
J. SANCHEZ/ MATERIALS - ART - BLICK

PO Date: 05/11/2026 **Deliver By:** 05/10/2026 **Buyer Name:** Maro Bojolyan

ITEM NO.	QTY ORDERED	UNIT OF ISSUE	DESCRIPTION	UNIT PRICE	AMOUNT
1	1	CO	CHANGE ORDER #1: CREDIT APPLIED	-20.95	-20.95
			**********		
2	4	PACK	11406-2006 TRU-RAY CONST PAPER WRM CLR 12X18 ASRTD	7.09	28.36
3	4	PACK	11406-1106 TRU-RAY CONST PAPER COOL CLR 12X18 ASRTD	7.09	28.36
4	8	PACK	10209-1023 BLICK DRAWING PAPER WHT 9X12 REAM 6OLB	17.10	136.80
			**********		
			5/11 ORDERED ONLINE ORDER #: 36204550		
			5/13 VENDOR GAVE CREDIT AS ONLINE PRICING CAME OUR HIGHER THAN QUOTED		

Vendor Instructions:

1. **Show purchase order number on all invoices, shipping papers and correspondence.**
2. **Mail invoice in duplicate Attn: Accounts Payable, at the above address.**
3. **Packing slip must accompany each delivery showing purchase order, catalog number, serial number and description.**
4. **No changes without written authorization from purchasing.**
5. **If freight charges are applicable, prepay and add to invoice. No C.O.D. charges permitted.**
6. **All vendors/manufacturers representatives must send manufacturers safety data sheet (OSHA Form 20 or equivalent) with shipment when applicable.**

SUB TOTAL	$ 172.57
SALES TAX	$ 20.32
SHIPPING	$ 0.00
TOTAL	$ 192.89

BURBANK UNIFIED SCHOOL DISTRICT

Approved By:

Peter Knapik

VENDOR COPY

PURCHASE ORDER

BURBANK UNIFIED SCHOOL DISTRICT

1900 WEST OLIVE AVE, BURBANK, CA 91506-2460
Phone: (818) 729-4400 Fax: (818) 729-4534

PURCHASE ORDER NO.
26003319
Show this number on invoices, packages and correspondence.

VENDOR

FOLLETT CONTENT SOLUTIONS LLC
1340 RIDGEVIEW DRIVE
MCHENRY, IL 60050

Phone: (877) 899-8550 **Fax:** (818)

SHIP TO

BURBANK UNIFIED SCHOOL DISTRICT
STEVENSON ELEMENTARY
3333 OAK ST.
BURBANK, CA 91505-3514

For: STEVENSON ELEMENTARY
C. SALAS/KNAPIK/DIAZ/STEVENSON SUMMER

PO Date: 05/14/2026 **Deliver By:** 05/29/2026 **Buyer Name:** Maro Bojolyan

ITEM NO.	QTY ORDERED	UNIT OF ISSUE	DESCRIPTION	UNIT PRICE	AMOUNT
		CO	CHANGE ORDER #1: CANCEL SOME ITEMS DUE TO BEING ON BACKORDER AND MAY NOT DELIVER ON TIME **********		
		EACH	* CANCEL * Accept and value each person (Learning to Get Along)by Meiners, Cheri J(#38015U6)Paperback Free Spirit Pub.,2006	12.99	0.00
1	3	EACH	After the fall: how Humpty Dumpty got back up again by Santat, Dan(#1525THX) Hardcover—Roaring Brook Press,2017	19.99	59.97
2	2	EACH	Bathe the cat by McGinty, Alice B(#1939QR9) Hardcover—Chronicle Books,2021	19.99	39.98
3	2	EACH	Flight school by Judge, Lita(#0959CM3) Hardcover— Atheneum Books for Young Readers,2014	18.99	37.98
4	2	EACH	The floating field : how a group of Thai boys built their own soccer field by Riley, Scott(#1913CM7) Hardcover—Millbrook Press,2021	19.99	39.98
5	2	EACH	Giraffes can't dance by Andreae, Giles(#09442L5) Hardcover—Orchard Books, c1999 p2001	19.99	39.98
6	2	EACH	How can I help? : a book about caring (Show Your Character) by Nelson, Robin(#0880JL0) Paperback—Lerner Publications Company,2014	8.99	17.98
		EACH	* CANCEL * I believe I can by Byers, Grace(#1284TY1) Hardcover—Balzer + Bray, an imprint of Harper Collins Publisher, 2020	19.99	0.00
7	2	EACH	Jabari jumps (Jabari)by Cornwall, Gaia (#1313AEX) Hardcover—Candlewick Press,2017	18.99	37.98
8	2	EACH	Jabari tries by Cornwall, Gaia(#1715TB4)Hardcover—Candlewick Press, 2020	18.99	37.98
9	3	EACH	Juneteenth (On My Own: Holidays) by Nelson, Vaunda Micheaux	8.99	26.97

Vendor Instructions:

1. **Show purchase order number on all invoices, shipping papers and correspondence.**
2. **Mail invoice in duplicate Attn: Accounts Payable, at the above address.**
3. **Packing slip must accompany each delivery showing purchase order, catalog number, serial number and description.**
4. **No changes without written authorization from purchasing.**
5. **If freight charges are applicable, prepay and add to invoice. No C.O.D. charges permitted.**
6. **All vendors/manufacturers representatives must send manufacturers safety data sheet (OSHA Form 20 or equivalent) with shipment when applicable.**

SUB TOTAL	$ 914.71
SALES TAX	$ 96.04
SHIPPING	$ 0.00
TOTAL	$ 1,010.75

BURBANK UNIFIED SCHOOL DISTRICT

Approved By:

Peter Knapik

VENDOR COPY

PURCHASE ORDER

BURBANK UNIFIED SCHOOL DISTRICT

1900 WEST OLIVE AVE, BURBANK, CA 91506-2460
Phone: (818) 729-4400 Fax: (818) 729-4534

PURCHASE ORDER NO.
26003320
Show this number on invoices, packages and correspondence.

VENDOR

FOLLETT CONTENT SOLUTIONS LLC
1340 RIDGEVIEW DRIVE
MCHENRY, IL 60050

Phone: (877) 899-8550 **Fax:** (818)

SHIP TO

BURBANK UNIFIED SCHOOL DISTRICT
MILLER ELEMENTARY
720 E. PROVIDENCIA AVE.
BURBANK, CA 91501-2499

For: MILLER ELEMENTARY
G. TANNER/KNAPIK/DIAZ/MILLER SUMMER

PO Date: 05/14/2026 **Deliver By:** 05/29/2026 **Buyer Name:** Maro Bojolyan

ITEM NO.	QTY ORDERED	UNIT OF ISSUE	DESCRIPTION	UNIT PRICE	AMOUNT
		CO	CHANGE ORDER #1: CANCEL SOME ITEMS DUE TO BEING ON BACKORDER AND MAY NOT DELIVER ON TIME **********		
		EACH	* CANCEL * Accept and value each person (Learning to Get Along)by Meiners, Cheri J(#38015U6)Paperback Free Spirit Pub.,2006	12.99	0.00
1	4	EACH	After the fall: how Humpty Dumpty got back up again by Santat, Dan(#1525THX) Hardcover—Roaring Brook Press,2017	19.99	79.96
2	4	EACH	Bathe the cat by McGinty, Alice B(#1939QR9) Hardcover—Chronicle Books,2021	19.99	79.96
3	3	EACH	Flight school by Judge, Lita(#0959CM3) Hardcover— Atheneum Books for Young Readers,2014	18.99	56.97
4	4	EACH	The floating field : how a group of Thai boys built their own soccer field by Riley, Scott(#1913CM7) Hardcover—Millbrook Press,2021	19.99	79.96
5	3	EACH	Giraffes can't dance by Andreae, Giles(#09442L5) Hardcover—Orchard Books, c1999 p2001	19.99	59.97
6	4	EACH	How can I help? : a book about caring (Show Your Character) by Nelson, Robin(#0880JL0) Paperback—Lerner Publications Company,2014	8.99	35.96
		EACH	* CANCEL * I believe I can by Byers, Grace(#1284TY1) Hardcover—Balzer + Bray, an imprint of Harper Collins Publisher, 2020	19.99	0.00
7	4	EACH	Jabari jumps (Jabari)by Cornwall, Gaia (#1313AEX) Hardcover—Candlewick Press,2017	18.99	75.96
8	4	EACH	Jabari tries by Cornwall, Gaia(#1715TB4)Hardcover—Candlewick Press, 2020	18.99	75.96
		EACH	* CANCEL * Juneteenth (On My Own: Holidays) by Nelson, Vaunda	8.99	0.00

Vendor Instructions:

1. **Show purchase order number on all invoices, shipping papers and correspondence.**
2. **Mail invoice in duplicate Attn: Accounts Payable, at the above address.**
3. **Packing slip must accompany each delivery showing purchase order, catalog number, serial number and description.**
4. **No changes without written authorization from purchasing.**
5. **If freight charges are applicable, prepay and add to invoice. No C.O.D. charges permitted.**
6. **All vendors/manufacturers representatives must send manufacturers safety data sheet (OSHA Form 20 or equivalent) with shipment when applicable.**

SUB TOTAL	$ 1,232.19
SALES TAX	$ 129.38
SHIPPING	$ 0.00
TOTAL	$ 1,361.57

BURBANK UNIFIED SCHOOL DISTRICT

Approved By:

Peter Knapik

VENDOR COPY

PURCHASE ORDER

BURBANK UNIFIED SCHOOL DISTRICT

1900 WEST OLIVE AVE, BURBANK, CA 91506-2460
Phone: (818) 729-4400 Fax: (818) 729-4534

PURCHASE ORDER NO.
26003321
Show this number on invoices, packages and correspondence.

VENDOR

FOLLETT CONTENT SOLUTIONS LLC
1340 RIDGEVIEW DRIVE
MCHENRY, IL 60050

Phone: (877) 899-8550 **Fax:** (818)

SHIP TO

BURBANK UNIFIED SCHOOL DISTRICT
MC KINLEY ELEMENTARY
349 W. VALENCIA AVE
BURBANK, CA 91506-3309

For: MC KINLEY ELEMENTARY
M. WHITE/KNAPIK/DIAZ/MCKINLEY SUMMER

PO Date: 05/14/2026 **Deliver By:** 05/29/2026 **Buyer Name:** Maro Bojolyan

ITEM NO.	QTY ORDERED	UNIT OF ISSUE	DESCRIPTION	UNIT PRICE	AMOUNT
		CO	CHANGE ORDER #1: CANCEL SOME ITEMS DUE TO BEING ON B/O AND MAY NOT DELIVER ON TIME **********		
1	3	EACH	Abuela by Dorros, Arthur(#31999K1) Paperback—Puffin, c1991 p1997	8.99	26.97
2	3	EACH	El barrio se levanta : la protesta que construyo el Parque Chicano by Aguila, Maria Dolores (#2930JC1) Hardcover—Dial Books for Young Readers, 2024 Language: Spanish	18.99	56.97
		EACH	* CANCEL * La cancion del cambio : himno para niños by Gorman, Amanda (#1888QY2) Hardcover—Viking,2022 Language: Spanish	18.99	0.00
3	1	EACH	El color de tu piel by Acevedo, Desiree (#1844PT7) Hardcover—Cuento de Luz,2021 Language: Spanish	19.95	19.95
4	2	EACH	De donde eres? by Mendez, Yamile Saied (#1434DU4) Hardcover—Harper, an imprint ofHarperCollinsPublishers,2019 Language: Spanish	19.99	39.98
5	2	EACH	El dia que Saida llego by Gomez Redondo, Susana (#0977TT2) Hardcover—Takatuta, c2012 p2013 Language: Spanish	24.99	49.98
		EACH	* CANCEL * Esta BIEN ser diferente : un libro infantil ilustrado sobre la diversidad y la empatia by Purtill, Sharon(#2848DB1)Hardcover—Dunhill Clare Publishing,2020 Language: Spanish	17.49	0.00
6	1	EACH	Isabel and her colores go to school by Alessandri, Alexandra(#1662ZQ4) Hardcover—Sleeping Bear Press,2021 Language: Spanish	16.99	16.99
7	3	EACH	Lola by Diaz, Junot (#1272YK5) Hardcover—Dial Books for Young Readers,2018 Language: Spanish	18.99	56.97
		EACH	* CANCEL * La nina que nunca cometia errores by Pett, Mark(#0710HK5) Hardcover—Picarona, sello infantil de Ediciones Obelisco, S.L., c2013p 2011 Language: Spanish	17.95	0.00
		EACH	* CANCEL * Oye, muro : un cuento de arte y comunidad by Verde,	7.99	0.00

Vendor Instructions:

1. **Show purchase order number on all invoices, shipping papers and correspondence.**
2. **Mail invoice in duplicate Attn: Accounts Payable, at the above address.**
3. **Packing slip must accompany each delivery showing purchase order, catalog number, serial number and description.**
4. **No changes without written authorization from purchasing.**
5. **If freight charges are applicable, prepay and add to invoice. No C.O.D. charges permitted.**
6. **All vendors/manufacturers representatives must send manufacturers safety data sheet (OSHA Form 20 or equivalent) with shipment when applicable.**

SUB TOTAL	$ 628.43
SALES TAX	$ 65.98
SHIPPING	$ 0.00
TOTAL	$ 694.41

BURBANK UNIFIED SCHOOL DISTRICT

Approved By:

Peter Knapik

VENDOR COPY

PURCHASE ORDER

BURBANK UNIFIED SCHOOL DISTRICT

1900 WEST OLIVE AVE, BURBANK, CA 91506-2460
Phone: (818) 729-4400 Fax: (818) 729-4534

PURCHASE ORDER NO.
26003322
Show this number on invoices, packages and correspondence.

VENDOR

FOLLETT CONTENT SOLUTIONS LLC
1340 RIDGEVIEW DRIVE
MCHENRY, IL 60050

Phone: (877) 899-8550 **Fax:** (818)

SHIP TO

BURBANK UNIFIED SCHOOL DISTRICT
JEFFERSON ELEMENTARY
1900 N. SIXTH ST.
BURBANK, CA 91504-2999

For: JEFFERSON ELEMENTARY
Y. DIAZ/KNAPIK/DIAZ/JEFFERSON/SUMMER

PO Date: 05/14/2026 **Deliver By:** 05/29/2026 **Buyer Name:** Maro Bojolyan

ITEM NO.	QTY ORDERED	UNIT OF ISSUE	DESCRIPTION	UNIT PRICE	AMOUNT
		CO	CHANGE ORDER #1: CANCEL SOME ITEMS DUE TO BEING ON B/O AND MAY NOT DELIVER ON TIME **********		
		EACH	* CANCEL * Accept and value each person (Learning to Get Along)by Meiners, Cheri J(#38015U6)Paperback Free Spirit Pub.,2006	12.99	0.00
1	4	EACH	After the fall: how Humpty Dumpty got back up again by Santat, Dan(#1525THX) Hardcover—Roaring Brook Press,2017	19.99	79.96
2	3	EACH	Bathe the cat by McGinty, Alice B(#1939QR9) Hardcover—Chronicle Books,2021	19.99	59.97
3	3	EACH	Flight school by Judge, Lita(#0959CM3) Hardcover— Atheneum Books for Young Readers,2014	18.99	56.97
4	3	EACH	The floating field : how a group of Thai boys built their own soccer field by Riley, Scott(#1913CM7) Hardcover—Millbrook Press,2021	19.99	59.97
5	3	EACH	Giraffes can't dance by Andreae, Giles(#09442L5) Hardcover—Orchard Books, c1999 p2001	19.99	59.97
6	3	EACH	How can I help? : a book about caring (Show Your Character) by Nelson, Robin(#0880JL0) Paperback—Lerner Publications Company,2014	8.99	26.97
		EACH	* CANCEL * I believe I can by Byers, Grace(#1284TY1) Hardcover—Balzer + Bray, an imprint of Harper Collins Publisher, 2020	19.99	0.00
7	3	EACH	Jabari jumps (Jabari)by Cornwall, Gaia (#1313AEX) Hardcover—Candlewick Press,2017	18.99	56.97
8	3	EACH	Jabari tries by Cornwall, Gaia(#1715TB4)Hardcover—Candlewick Press, 2020	18.99	56.97
9	4	EACH	Juneteenth (On My Own: Holidays) by Nelson, Vaunda Micheaux	8.99	35.96

Vendor Instructions:

1. **Show purchase order number on all invoices, shipping papers and correspondence.**
2. **Mail invoice in duplicate Attn: Accounts Payable, at the above address.**
3. **Packing slip must accompany each delivery showing purchase order, catalog number, serial number and description.**
4. **No changes without written authorization from purchasing.**
5. **If freight charges are applicable, prepay and add to invoice. No C.O.D. charges permitted.**
6. **All vendors/manufacturers representatives must send manufacturers safety data sheet (OSHA Form 20 or equivalent) with shipment when applicable.**

SUB TOTAL	$ 1,082.39
SALES TAX	$ 113.65
SHIPPING	$ 0.00
TOTAL	$ 1,196.04

BURBANK UNIFIED SCHOOL DISTRICT

Approved By:

Peter Knapik

VENDOR COPY

TO: Board of Education / Superintendent — Consent 06/25/2026

SUBMITTED BY: Human Resources Services

SUBJECT: Certificated Personnel - Report Number 25-26-22. It is recommended that the following appointments for Certificated Personnel be approved and/or ratified. All personnel will be properly elected in accordance with District policies and salary schedule.

Change of Assignment	Assignment	APPROPRIATION NUMBER	PCT	RATE OF PAY	REMARKS	EFFECTIVE DATE/END DATE
Karapetian, Lusine	Child Dev. Teacher	12.0-61051.1-11100-10000-1110-2160000	100	J-003-08 + LON		06/01/2026

Change of End Date	Assignment	APPROPRIATION NUMBER	PCT	RATE OF PAY	REMARKS	EFFECTIVE DATE/END DATE
Huber, Krystal	Long Term Sub	01.0-00000.0-11100-10000-1160-7550000	100	$327.71	T-001-01	08/08/2025 - 05/29/2026
Maddigan, Deborah	Long Term Sub	01.0-00000.0-00000-31100-1260-3210000	100	$327.71	T-001-01	05/18/2026 - 05/29/2026
McCorkle, Molly	Long Term Sub	01.0-00000.0-11100-10000-1160-7550000	100	$327.71		01/05/2026 - 05/15/2026

Election: Substitute	Assignment	APPROPRIATION NUMBER	PCT	RATE OF PAY	REMARKS	EFFECTIVE DATE/END DATE
Espinoza, Andrea	CC Sub	12.0-90602.0-11100-10000-1160-7540000	100	S-001-06		05/20/2026

Election: Long Term Substitute	Assignment	APPROPRIATION NUMBER	PCT	RATE OF PAY	REMARKS	EFFECTIVE DATE/END DATE
Lalicata, Traci	Long Term Sub	01.0-00000.0-11100-10000-1160-7550000	100	$250.00		05/04/2026 - 05/29/2026

Election: Management	Assignment	APPROPRIATION NUMBER	PCT	RATE OF PAY	REMARKS	EFFECTIVE DATE/END DATE
Laird, Bobbi	Psychologist	01.0-00000.0-00000-31200-1214-7440000	100	K-015-08 +MA		07/01/2026

Election: Prob 1	Assignment	APPROPRIATION NUMBER	PCT	RATE OF PAY	REMARKS	EFFECTIVE DATE/END DATE
Bohinski, Sarah	Teacher	01.0-00000.0-11100-10000-1110-3220000	100	T-005-14 + MA		08/10/2026
Broach, Mikela	Teacher	01.0-00000.0-11100-10000-1110-4320000	100	T-003-04		08/10/2026
Colenzo, Karly	Teacher	01.0-00000.0-11100-10000-1110-3220000	100	T-001-02		08/10/2026

Election: Prob 0	Assignment	APPROPRIATION NUMBER	PCT	RATE OF PAY	REMARKS	EFFECTIVE DATE/END DATE
Contreras, Evelyn	School Psych Intern	01.0-65000.0-50010-31200-1231-7440000		X-001-03		08/10/2026 - 05/28/2027
Hanessian, Tina	School Psych Intern	01.0-65000.0-50010-31200-1231-7440000		X-001-03		08/10/2026 - 05/28/2027

Election: CC Sub Teacher	Assignment	APPROPRIATION NUMBER	PCT	RATE OF PAY	REMARKS	EFFECTIVE DATE/END DATE
Acevedo, Steven	CC Sub Tcher	01.0-26000.0-11100-10000-1160-5480000	100	1-005-01		06/08/2026 - 07/09/2026
Bruewer, Autumn	CC Sub Tcher	01.0-26000.0-11100-10000-1160-5480000	100	1-005-01		06/08/2026 - 07/09/2026
Chavez Nunez, Samantha	CC Sub Tcher	01.0-26000.0-11100-10000-1160-5480000	100	1-005-01		06/08/2026 - 07/09/2026
Hawthorne, Rickie	CC Sub Tcher	01.0-26000.0-11100-10000-1160-5480000	100	1-005-01		06/08/2026 - 07/09/2026
Hougan, William	CC Sub Tcher	01.0-26000.0-11100-10000-1160-5480000	100	1-005-01		06/08/2026 - 07/09/2026
Jackson, Cheryl	CC Sub Tcher	01.0-26000.0-11100-10000-1160-5480000	100	1-005-01		06/08/2026 - 07/09/2026
Jones, Cheukwa	CC Sub Tcher	01.0-26000.0-11100-10000-1160-5480000	100	1-005-01		06/08/2026 - 07/09/2026
Olkowski, Joshua	CC Sub Tcher	01.0-26000.0-11100-10000-1160-5480000	100	1-005-01		06/08/2026 - 07/09/2026
Rodriguez, Anthony	CC Sub Tcher	01.0-26000.0-11100-10000-1160-5480000	100	1-005-01		06/08/2026 - 07/09/2026
Smith, Johanna	CC Sub Tcher	01.0-26000.0-11100-10000-1160-5480000	100	1-005-01		06/08/2026 - 07/09/2026

TO: Board of Education / Superintendent — Consent 06/25/2026

SUBMITTED BY: Human Resources Services

SUBJECT: Certificated Personnel - Report Number 25-26-22. It is recommended that the following appointments for Certificated Personnel be approved and/or ratified. All personnel will be properly elected in accordance with District policies and salary schedule.

Election: SS Sub	Assignment	APPROPRIATION NUMBER	PCT	RATE OF PAY	REMARKS	EFFECTIVE DATE/END DATE
Acevedo, Steven	Sub Tcher/Sped Sub	01.0-00000.0-11100-10000-1130-7550000	100	S-001-01/S-001-02		06/08/2026 - 07/16/2026
Atherton, Debra	Sub Tcher/Sped Sub	01.0-00000.0-11100-10000-1130-7550000	100	S-001-01/S-001-02		06/08/2026 - 07/16/2026
Bruewer, Autumn	Sub Tcher/Sped Sub	01.0-00000.0-11100-10000-1130-7550000	100	S-001-01/S-001-02		06/08/2026 - 07/16/2026
Carter, Joel Devyn	Sub Tcher/Sped Sub	01.0-00000.0-11100-10000-1130-7550000	100	S-001-01/S-001-02		06/08/2026 - 07/16/2026
Caruso, Christine	Sub Tcher/Sped Sub	01.0-00000.0-11100-10000-1130-7550000	100	S-001-01/S-001-02		06/08/2026 - 07/16/2026
Chaves Nunez, Samantha	Sub Tcher/Sped Sub	01.0-00000.0-11100-10000-1130-7550000	100	S-001-01/S-001-02		06/08/2026 - 07/16/2026
Ganzel, Stephanie	Sub Tcher/Sped Sub	01.0-00000.0-11100-10000-1130-7550000	100	S-001-01/S-001-02		06/08/2026 - 07/16/2026
Hawthorne, Rickie	Sub Tcher/Sped Sub	01.0-00000.0-11100-10000-1130-7550000	100	S-001-01/S-001-02		06/08/2026 - 07/16/2026
Hougan, William	Sub Tcher/Sped Sub	01.0-00000.0-11100-10000-1130-7550000	100	S-001-01/S-001-02		06/08/2026 - 07/16/2026
Jackson, Cheryl	Sub Tcher/Sped Sub	01.0-00000.0-11100-10000-1130-7550000	100	S-001-01/S-001-02		06/08/2026 - 07/16/2026
Jones, Cheukwa	Sub Tcher/Sped Sub	01.0-00000.0-11100-10000-1130-7550000	100	S-001-01/S-001-02		06/08/2026 - 07/16/2026
Krikorian, Christine	Sub Tcher/Sped Sub	01.0-00000.0-11100-10000-1130-7550000	100	S-001-01/S-001-02		06/08/2026 - 07/16/2026
Lindner, Jennifer	Sub Tcher/Sped Sub	01.0-00000.0-11100-10000-1130-7550000	100	S-001-01/S-001-02		06/08/2026 - 07/16/2026
Nolen, Nikki	Sub Tcher/Sped Sub	01.0-00000.0-11100-10000-1130-7550000	100	S-001-01/S-001-02		06/08/2026 - 07/16/2026
Olkowski, Joshua	Sub Tcher/Sped Sub	01.0-00000.0-11100-10000-1130-7550000	100	S-001-01/S-001-02		06/08/2026 - 07/16/2026
Payne, Marbell	Sub Tcher/Sped Sub	01.0-00000.0-11100-10000-1130-7550000	100	S-001-01/S-001-02		06/08/2026 - 07/16/2026
Real, Edwin	Sub Tcher/Sped Sub	01.0-00000.0-11100-10000-1130-7550000	100	S-001-01/S-001-02		06/08/2026 - 07/16/2026
Rodriguez, Anthony	Sub Tcher/Sped Sub	01.0-00000.0-11100-10000-1130-7550000	100	S-001-01/S-001-02		06/08/2026 - 07/16/2026
Smith, Johanna	Sub Tcher/Sped Sub	01.0-00000.0-11100-10000-1130-7550000	100	S-001-01/S-001-02		06/08/2026 - 07/16/2026

Leave of Absence	Assignment	APPROPRIATION NUMBER	PCT	RATE OF PAY	REMARKS	EFFECTIVE DATE/END DATE
CT – 209 – 25	Teacher	01.0-00000.0-11100-10000-1110-2060000	100	T-006-09		05/14/2026 - 05/29/2026
Klauder, Lindsey	Providencia	01.0-00000.0-11100-10000-1110-2130000	100	2-003-09		08/10/2026 - 05/28/2027
Palaski, Jessica	Assistant Principal	01.0-00000.0-00000-27000-1313-4320000	100	K-007-03	Change of Date	05/18/2026 - 05/20/2026

Resignation	Assignment	APPROPRIATION NUMBER	PCT	RATE OF PAY	REMARKS	EFFECTIVE DATE/END DATE
Coyne, Emilie	Assistant Principal	01.0-01500.0-11117-27000-1313-2100000	100	K-014-06+MA		06/30/2026
Dube, Marc	Sub Tcher/Sped Sub	01.0-00000.0-11100-10000-1160-7550000	100	S-001-01/S-001-02		06/19/2026
Merwin, Regina	Sub Tcher/Sped Sub	01.0-00000.0-11100-10000-1160-7550000	100	S-001-01/S-001-02		05/20/2026
Sawyer, Rayell	Sub Tcher/Sped Sub	01.0-00000.0-11100-10000-1160-7550000	100	S-001-01/S-001-02		05/26/2026
Savoulian, Lory	Sub Tcher/Sped Sub	01.0-00000.0-11100-10000-1160-7550000	100	S-001-01/S-001-02		04/24/2026

Retirement	Assignment	APPROPRIATION NUMBER	PCT	RATE OF PAY	REMARKS	EFFECTIVE DATE/END DATE
Bickelmann, Christopher	Teacher	01.0-65000.0-57602-11200-1110-4310000	100	T-005-24	Began Service 10/13/1994	05/29/2026
Broman, Richard	Teacher	01.0-00000.0-11100-10000-1110-4310000	100	T-004-23	Began Service 08/20/2024	06/30/2026

Termination	Assignment	APPROPRIATION NUMBER	PCT	RATE OF PAY	REMARKS	EFFECTIVE DATE/END DATE
Hubert, Lorri	Intervention	01.0-00000.0-11100-10000-1130-7550000	100	X-001-06		05/29/2026

TO: Board of Education / Superintendent Consent 06/25/2026

SUBMITTED BY: Human Resources Services

SUBJECT: Certificated Personnel - Report Number 25-26-22. It is recommended that the following appointments for Certificated Personnel be approved and/or ratified. All personnel will be properly elected in accordance with District policies and salary schedule.

Name	Program/Site	Task/Project	Type	Rate	Hours/Days Cap	Applicable Payrolls
Adams, Andria	Miller	Summer School Teacher	Hourly	$53.46	105	06/04/2026 - 07/09/2026
Adams, Kelly	JBHS	Summer School Teacher	Hourly	$53.46	150	06/04/2026 - 07/16/2026
Aleman, Richere	Health Services	Retention Bonus	Stipend	$10,000	1	08/08/2025 - 05/31/2026
Almanzar-Leal, Carolina	JBHS	Class Size	Stipend	$50.00	1	01/01/2026 - 05/29/2026
Alpert, Madeline	BHS	Class Coverage	Hourly	$54.73	1	05/01/2026 - 05/31/2026
Alpert, Madeline	Instructional Services	Other Hourly	Hourly	$39.67	2	03/30/2026
Arjoyan, Anush	JBHS	Class Size	Stipend	$200.00	1	01/01/2026 - 05/29/2026
Arjoyan, Anush	Instructional Services	Other Hourly	Hourly	$39.67	2	03/30/2026
Armes, Deborah	Miller	Summer School Teacher	Hourly	$53.46	52.50	06/04/2026 - 07/09/2026
Armes, Deborah	Providencia	Other Hourly	Hourly	$39.67	3.5	06/01/2026
Avagyan, Anoush	BHS	Class Coverage	Hourly	$54.73	1	05/01/2026 - 05/31/2026
Aviles, Johanna	McKinley	Summer School Teacher	Hourly	$53.46	105	06/04/2026 - 07/09/2026
Bagramyan, Agavni	Health Services	Retention Bonus	Stipend	$10,000	1	08/08/2025 - 05/31/2026
Bailey, Erin Kate	Providencia	Other Hourly	Hourly	$39.67	3.5	06/01/2026
Baker, Ryan	Child Development	Summer ATB Assignment	Hourly	$34.37	80	06/15/2026 - 06/26/2026
Balian, Shake	JBHS	Class Size	Stipend	$450.00	1	01/01/2026 - 05/29/2026
Balisy, Tawnya	Mann	Summer School Teacher	Hourly	$66.99	105	06/04/2026 - 07/09/2026
Ballesteros, Nida	Miller	Summer School Teacher	Hourly	$53.46	105	06/04/2026 - 07/09/2026
Baroutgian, Elizabeth	JBHS	Class Size	Stipend	$2,750.00	1	01/01/2026 - 05/29/2026
Beal, Briana	Instructional Services	Other Hourly	Hourly	$39.67	2	03/30/2026
Beal, Briana	Instructional Services	Other Hourly	Hourly	$39.67	6	06/01/2026
Beliveau, Alyssa	Stevenson	Summer School Teacher	Hourly	$53.46	105	06/04/2026 - 07/09/2026
Bentley, Jim	BHS	Class Coverage	Hourly	$54.73	1	05/01/2026 - 05/31/2026
Bentley, Jim	BHS	Class Coverage	Hourly	$54.73	4	05/01/2026 - 05/31/2026
Berich, Erin	JBHS	Combo Class	Stipend	$600.00	1	01/01/2026 - 05/29/2026
Block, Olivia	Washington	Other Hourly	Hourly	$39.67	10	06/01/2026 - 06/30/2026
Bonilla, Cindy	Washington	Summer School Teacher	Hourly	$66.99	105	06/04/2026 - 07/09/2026
Bowne, Shelby	Providencia	Other Hourly	Hourly	$39.67	3.5	06/01/2026
Breeden, Bruce	Magnolia Park	Summer School Teacher	Hourly	$102.62	150	06/04/2026 - 07/09/2026
Bruggeman,Maximilian	JBHS	Class Size	Stipend	$250.00	1	01/01/2026 - 05/29/2026
Bucher, Jessica	Disney	Other Hourly	Hourly	$39.67	12	06/01/2026 - 06/30/2026
Burke, Madalena	JBHS	Class Size	Stipend	$375.00	1	01/01/2026 - 05/29/2026
Caamano, Sarah	Instructional Services	Other Hourly	Hourly	$39.67	2	03/30/2026
Caamano, Sarah	Instructional Services	Other Hourly	Hourly	$39.67	6	06/01/2026
Caamano, Sarah	Luther	Other Hourly	Hourly	$39.67	2	05/20/2026 - 05/29/2026
Cabral, Natalie	Miller	Summer School Teacher	Hourly	$53.46	105	06/04/2026 - 07/09/2026
Campos, Mariela	JBHS	Other Hourly	Hourly	$39.67	2	05/01/2026 - 05/31/2026
Capelle, Melissa	JBHS	Combo Class	Stipend	$400.00	1	01/01/2026 - 05/29/2026
Capelle, Melissa	JBHS	Other Hourly	Hourly	$39.67	1	05/20/2026
Capelle, Melissa	JBHS	Combo Class	Stipend	$600.00	1	01/01/2026 - 05/29/2026
Capelle, Melissa	JBHS	Summer School Teacher	Hourly	$66.99	150	06/04/2026 - 07/16/2026
Carino, Jeanne	Luther	Class Size	Stipend	$1,400.00	1	01/01/2026 - 05/29/2026
Castro, Jesus	BHS	Class Coverage	Hourly	$54.73	2	05/01/2026 - 05/31/2026
Chakmakchyan, Vartkes	BHS	Class Coverage	Hourly	$54.73	2	05/01/2026 - 05/31/2026
Chakmakchyan, Vartkes	BHS	Class Coverage	Hourly	$54.73	1	05/01/2026 - 05/30/2026

TO: Board of Education / Superintendent Consent 06/25/2026

SUBMITTED BY: Human Resources Services

SUBJECT: Certificated Personnel - Report Number 25-26-22. It is recommended that the following appointments for Certificated Personnel be approved and/or ratified. All personnel will be properly elected in accordance with District policies and salary schedule.

Name	Program/Site	Task/Project	Type	Rate	Hours/Days Cap	Applicable Payrolls
Choi, Woore	Health Services	Retention Bonus	Stipend	$8,000.00	1	08/08/2025 - 05/31/2026
Choi, Audrey	Health Services	Retention Bonus	Stipend	$5,000.00	1	01/05/2026 - 05/31/2026
Classon, Gracie	Jefferson	Summer School Teacher	Hourly	$53.46	105	06/04/2026 - 07/09/2026
Classon, Gracie	Disney	Other Hourly	Hourly	$39.67	12	06/01/2026 - 06/30/2026
Collins, Brian	Washington	Summer School Teacher	Hourly	$53.67	105	06/04/2026 - 07/09/2026
Collins, Chandra	Washington	Summer School Teacher	Hourly	$53.67	105	06/04/2026 - 07/09/2026
Colvin-Marvin, Katherine	Miller	Summer School Teacher	Hourly	$53.46	52.5	06/04/2026 - 07/09/2026
Colvin-Marvin, Katherine	Providencia	Other Hourly	Hourly	$39.67	3.5	06/01/2026
Concidine, Michael	Luther	Class Size	Stipend	$800.00	1	01/01/2026 - 05/29/2026
Cook, Jacob	JBHS	CIF Swim	Stipend	$227.00	2	05/01/2026 - 05/31/2026
Cooper, Jacob	JBHS	Other Hourly	Hourly	$39.67	7	05/18/2026 - 05/28/2026
Corral, Christopher	BHS	Class Coverage	Hourly	$54.73	1	05/01/2026 - 05/30/2026
Corral, Christopher	JBHS	Summer School Teacher	Hourly	$66.99	150	06/04/2026 - 07/16/2026
Cozzi, Angela	Washington & JBHS	Summer School Teacher	Hourly	$66.99	105	06/04/2026 - 07/09/2026
Curran, Emily	JBHS	Summer School Teacher	Hourly	$53.46	150	06/04/2026 - 07/16/2026
Dagata, Patty	Jefferson	Summer School Teacher	Hourly	$53.46	105	06/04/2026 - 07/09/2026
Davis, Aja	Washington	Summer School Teacher	Hourly	$53.67	105	06/04/2026 - 07/09/2026
Dawes, Jacqueline	JBHS	Summer School Teacher	Hourly	$53.46	150	06/04/2026 - 07/16/2026
Delaurie, Jerry	Huerta	Class Size	Stipend	$100.00	1	01/05/2026 - 05/29/2026
Dixon, joann	JBHS	Summer School Teacher	Hourly	$53.46	150	06/04/2026 - 07/16/2026
Drabecki, Nicole	Huerta	Class Size	Stipend	$100.00	1	01/05/2026 - 05/29/2026
Earwood, Jerry	Providencia	Other Hourly	Hourly	$39.67	3.5	06/01/2026
Ebert, Kendall	Luther	Class Size	Stipend	$800.00	1	01/01/2026 - 05/29/2026
Engel, Tamera	Washington	Summer School Teacher	Hourly	$66.99	105	06/04/2026 - 07/09/2026
Enokian, Stefanie	Luther	Other Hourly	Hourly	$39.67	1	05/20/2026 - 05/29/2026
Evans, David	Luther	Other Hourly	Hourly	$39.67	1	05/20/2026 - 05/29/2026
Evans, David	Luther	Class Size	Stipend	$650.00	1	01/01/2026 - 05/29/2026
Farewell, Rebecca	Washington	Summer School Teacher	Hourly	$66.99	105	06/04/2026 - 07/09/2026
Faris, Theresa	Providencia	Other Hourly	Hourly	$39.67	3.5	06/01/2026
Fernando, Gajan	JBHS	Class Size	Stipend	$300.00	1	01/01/2026 - 05/29/2026
Fitzgerald, Kyle	JBHS	Combo Class	Stipend	$200.00	1	01/01/2026 - 05/29/2026
Fitzpatrick, Michelle	Miller	Summer School Teacher	Hourly	$53.46	105	06/04/2026 - 07/09/2026
Fowler, Kirsty	Instructional Services	Other Hourly	Hourly	$39.67	2	03/30/2026
Fuhr, Amy	Huerta	Saturday Teacher	Hourly	$169.90	1	05/16/2026
Gerharter, Darla	Washington	Summer School Teacher	Hourly	$53.67	105	06/04/2026 - 07/09/2026
Gerharter, Darla	Providencia	Other Hourly	Hourly	$39.67	3.5	06/01/2026
Geronimo, Edgardo	Miller	Summer School Teacher	Hourly	$53.46	105	06/04/2026 - 07/09/2026
Gillearn, Jason	JBHS	Combo Class	Stipend	$200.00	1	01/01/2026 - 05/29/2026
Given, Sarah	BHS	Class Coverage	Hourly	$54.73	2	05/01/2026 - 05/31/2026
Glover, Donovan	BHS	Class Coverage	Hourly	$54.73	1	05/01/2026 - 05/31/2026
Gomez, Jennifer	JBHS	Combo Class	Stipend	$200.00	1	01/01/2026 - 05/29/2026
Gomez, Jennifer	JBHS	Summer School Teacher	Hourly	$53.46	150	06/04/2026 - 07/16/2026
Gonzalez, Izabelle	Health Services	Retention Bonus	Stipend	$10,000	1	08/08/2025 - 05/31/2026
Gregerson, Lauren	Stevenson	Summer School Teacher	Hourly	$53.46	105	06/04/2026 - 07/09/2026
Griffin, Jamie	Huerta	Class Size	Stipend	$450.00	1	01/05/2026 - 05/29/2026

TO: Board of Education / Superintendent Consent 06/25/2026

SUBMITTED BY: Human Resources Services

SUBJECT: Certificated Personnel - Report Number 25-26-22. It is recommended that the following appointments for Certificated Personnel be approved and/or ratified. All personnel will be properly elected in accordance with District policies and salary schedule.

Name	Program/Site	Task/Project	Type	Rate	Hours/Days Cap	Applicable Payrolls
Grimshaw, Dena	Instructional Services	Other Hourly	Hourly	$39.67	2	03/30/2026
Grimshaw, Dena	Instructional Services	Other Hourly	Hourly	$39.67	6	06/01/2026
Grimshaw, Douglas	BHS	Class Coverage	Hourly	$54.73	1	05/01/2026 - 05/31/2026
Guzman, Jordan	McKinley	Summer School Teacher	Hourly	$24.42	120.75	06/04/2026 - 07/09/2026
Hamden, Rush	BHS	Class Coverage	Hourly	$54.73	1	05/01/2026 - 05/31/2026
Han, Amy	Washington	Summer School Teacher	Hourly	$53.67	105	06/04/2026 - 07/09/2026
Hanson, Moira	Miller	Summer School Teacher	Hourly	$53.46	105	06/04/2026 - 07/09/2026
Harney, Dina	Instructional Services	Other Hourly	Hourly	$39.67	2	03/30/2026
Harney, Dina	Instructional Services	Other Hourly	Hourly	$39.67	6	06/01/2026
Harrison, Brenda	Child Development	Summer ATB Assignment	Hourly	$34.37	350	06/03/2026 - 08/07/2026
Harrisson, Lisa	Special Ed	Add'l Duties	Hourly	$95.47	35	05/12/2026 - 06/30/2026
Harrisson, Lisa	Special Ed	Add'l Duties	Hourly	$98.42	110	07/01/2026 - 12/18/2026
Hayes, Christine	Luther	Other Hourly	Hourly	$39.67	1	05/20/2026 - 05/29/2026
Heath, Madison	Mann	Summer School Teacher	Hourly	$66.99	105	06/04/2026 - 07/09/2026
Heckel, Stephen	Facilities	CTE Teacher	Hourly	$60.43	100	05/29/2026 - 06/30/2026
Hedin-Abreu, David	JBHS	Class Size	Stipend	$2,750.00	1	01/01/2026 - 05/29/2026
Helgren, Tyler	Luther	Other Hourly	Hourly	$39.67	2	05/20/2026 - 05/29/2026
Hernandez, Dorothy	Jefferson	Summer School Teacher	Hourly	$53.46	105	06/04/2026 - 07/09/2026
Hochberg, Adam	JBHS	Class Size	Stipend	$125.00	1	01/01/2026 - 05/29/2026
Howard, Rachel	Jefferson	Summer School Teacher	Hourly	$53.46	105	06/04/2026 - 07/09/2026
Holubek, Carol	Instructional Services	Intervention	Hourly	$53.46	60	06/01/2026 - 06/29/2026
Howitt, Elayne	JBHS	Summer School Teacher	Hourly	$66.99	150	06/04/2026 - 07/16/2026
Isaeian, Mazhan	BHS	Class Coverage	Hourly	$54.73	2	05/01/2026 - 05/31/2026
Jackson, Anna	Health Services	Retention Bonus	Stipend	$10,000.00	1	08/08/2025 - 05/31/2026
Jacobsen, Kevin	JBHS	Summer School Teacher	Hourly	$53.46	150	06/04/2026 - 07/16/2026
Jamison, Mozhdeh	Huerta	Class Size	Stipend	$375.00	1	01/05/2026 - 05/29/2026
Kalachi, Monique	Miller	Summer School Teacher	Hourly	$53.46	105	06/04/2026 - 07/09/2026
Karapetian, Lusine	Child Development	Summer ATB Assignment	Hourly	$29.66	350	06/03/2026 - 08/07/2026
Kaur, Harjot	JBHS	Curriculum Writing	Hourly	$39.67	3	05/20/2026
Keeler, Fred	Instructional Services	Other Hourly	Hourly	$39.67	2	03/30/2026
Keeler, Fred	Huerta	Class Size	Stipend	$300.00	1	01/05/2026 - 05/29/2026
Kelly, Laury	Miller	Class Coverage	Hourly	$54.73	4	05/08/2026 - 05/13/2026
Kelly, Laury	Miller	Summer School Teacher	Hourly	$53.46	105	06/04/2026 - 07/09/2026
Keshishyan, Dianna	Health Services	Retention Bonus	Stipend	$10,000.00	1	08/08/2025 - 05/31/2026
Kienlen, Susan	Miller	Summer School Teacher	Hourly	$53.46	105	06/04/2026 - 07/09/2026
Kim, Alexander	BHS	Class Coverage	Hourly	$54.73	1	05/01/2026 - 05/31/2026
Kim, Jung	JBHS	Class Size	Stipend	$1,325.00	1	01/01/2026 - 05/29/2026
Knight, Kasey	Mann	Summer School Teacher	Hourly	$66.99	105	06/04/2026 - 07/09/2026
Lance, Michael	BHS	Class Coverage	Hourly	$54.73	1	05/01/2026 - 05/31/2026
Lagman, Gennine-Tiffany	Washington	Summer School Teacher	Hourly	$66.99	105	06/04/2026 - 07/09/2026
Larson, Sarah	Washington	Summer School Teacher	Hourly	$53.67	105	06/04/2026 - 07/09/2026
Ledesma, Venecia	Washington	Summer School Teacher	Hourly	$53.67	105	06/04/2026 - 07/09/2026
Levi, Julie	Washington	Summer School Teacher	Hourly	$53.67	105	06/04/2026 - 07/09/2026
Lincoln, Kristina	Miller	Summer School Teacher	Hourly	$53.46	105	06/04/2026 - 07/09/2026
Lucas, Amy	JBHS	Other Hourly	Hourly	$39.67	1	05/20/2026

TO: Board of Education / Superintendent Consent 06/25/2026

SUBMITTED BY: Human Resources Services

SUBJECT: Certificated Personnel - Report Number 25-26-22. It is recommended that the following appointments for Certificated Personnel be approved and/or ratified. All personnel will be properly elected in accordance with District policies and salary schedule.

Name	Program/Site	Task/Project	Type	Rate	Hours/Days Cap	Applicable Payrolls
Lucero, Arnette	McKinley	Summer School Teacher	Hourly	$53.46	105	06/04/2026 - 07/09/2026
Machado, Michael	Miller	Combo Class	Stipend	$1,000.00	1	01/05/2026 - 05/29/2026
Machado, Michael	Washington	Summer School Teacher	Hourly	$53.67	105	06/04/2026 - 07/09/2026
Mac Neill, Michelle	Washington	Other Hourly	Hourly	$39.67	10	06/01/2026 - 06/30/2026
Magallon, Matthew	JBHS	CIF Baseball	Stipend	$227.00	1	05/01/2026 - 05/31/2026
Malinovsky, Kaitlyn	BHS	Class Coverage	Hourly	$54.73	1	05/01/2026 - 05/31/2026
Mancilla, Karla	McKinley	Summer School Teacher	Hourly	$24.42	120.75	06/04/2026 - 07/09/2026
Manoukian, Mariam	Health Services	Retention Bonus	Stipend	$10,000.00	1	08/08/2025 - 05/31/2026
Marquez Santos, Jenniffer	McKinley	Summer School Teacher	Hourly	$53.46	105	06/04/2026 - 07/09/2026
Martell-Ruiz, Annabel	BHS	Class Coverage	Hourly	$54.73	1	05/01/2026 - 05/31/2026
Martinez, Allison	Mann	Summer School Teacher	Hourly	$66.99	105	06/04/2026 - 07/09/2026
Martinez, Olivia	JBHS	Other Hourly	Hourly	$39.67	4.5	05/01/2026 - 05/31/2026
Maslyk, Britta	BHS	Class Coverage	Hourly	$54.73	1	05/01/2026 - 05/31/2026
Mata, Mark	Jefferson	Summer School Teacher	Hourly	$53.46	105	06/04/2026 - 07/09/2026
McDermott, Matthew	BHS	Class Coverage	Hourly	$54.73	1	05/01/2026 - 05/31/2026
McDermott, Sara	Providencia	Other Hourly	Hourly	$39.67	3.5	06/01/2026
McKain, Allison	BHS	Class Coverage	Hourly	$54.73	4	05/01/2026 - 05/31/2026
McKelvey, Keely	Washington	Summer School Teacher	Hourly	$66.99	105	06/04/2026 - 07/09/2026
McLynn, Sean	Luther	Other Hourly	Hourly	$39.67	1	05/20/2026 - 05/29/2026
McNutt, Kelly	Disney	Other Hourly	Hourly	$39.67	30	06/01/2026 - 06/30/2026
Medina, Jennifer	McKinley	Other Hourly	Hourly	$39.67	10	05/01/2026 - 05/31/2026
Melendez, Barlon Kent	Washington	Summer School Teacher	Hourly	$66.99	105	06/04/2026 - 07/09/2026
Meschkat, Ryanne	JBHS	Combo Class	Stipend	$200.00	1	01/01/2026 - 05/29/2026
Mesquita, Nicholas	JBHS	Class Size	Stipend	$600.00	1	01/01/2026 - 05/29/2026
Metcalf, Diane	Jefferson	Summer School Teacher	Hourly	$53.46	52.5	06/04/2026 - 07/09/2026
Michelman, Setaporn	Stevenson	Summer School Teacher	Hourly	$53.46	105	06/04/2026 - 07/09/2026
Michalopoulos, Anjanette	Special Ed	Add'l Duties	hourly	$102.62	100	06/01/2026 - 07/30/2026
Miller, Kimbra	Washington	Summer School Teacher	Hourly	$53.67	105	06/04/2026 - 07/09/2026
Minasyan, Armine	BHS	Class Coverage	Hourly	$54.73	1	05/01/2026 - 05/31/2026
Mindel, Brittany	Washington	Summer School Teacher	Hourly	$53.67	105	06/04/2026 - 07/09/2026
Miron, Crystal	Washington	Summer School Teacher	Hourly	$66.99	105	06/04/2026 - 07/09/2026
Moench, Jocelyn	Child Development	Summer ATB Assignment	Hourly	$34.37	350	06/03/2026 - 08/07/2026
Molina, Cesar	McKinley	Summer School Teacher	Hourly	$53.46	105	06/04/2026 - 07/09/2026
Moore, Winston	JBHS	Combo Class	Stipend	$200.00	1	01/01/2026 - 05/29/2026
Moore, Winston	JBHS	CIF Track and Field Boys	Stipend	$227.00	2	05/01/2026 - 05/31/2026
Moore, Winston	JBHS	CIF Track and Field Girls	Stipend	$227.00	1	05/01/2026 - 05/31/2026
Moreno, Virginia	Stevenson	Summer School Teacher	Hourly	$53.46	52.5	06/04/2026 - 07/09/2026
Movessian, Ara	Luther	Other Hourly	Hourly	$39.67	1	05/20/2026 - 05/29/2026
Movsessian, Armenia	Instructional Services	Other Hourly	Hourly	$39.67	30	06/01/2026 - 08/12/2026
Mucha, Michele	Special Ed	Intervention	Hourly	$53.46	4	05/01/2026 - 06/30/2026
Mucha, Michele	Special Ed	Intervention	Hourly	$53.46	101	07/01/2026 - 03/31/2027
Mucha, Michele	Special Ed	Other Hourly	Hourly	$39.67	10	07/01/2026 - 03/31/2027
Mucha, Michele	Mann	Summer School Teacher	Hourly	$66.99	105	06/04/2026 - 07/09/2026
Myers, Guy	JBHS	Class Size	Stipend	$1,550.00	1	01/01/2026 - 05/29/2026
Nakata, Jennifer	Washington	Summer School Teacher	Hourly	$53.67	105	06/04/2026 - 07/09/2026

TO: Board of Education / Superintendent Consent 06/25/2026

SUBMITTED BY: Human Resources Services

SUBJECT: Certificated Personnel - Report Number 25-26-22. It is recommended that the following appointments for Certificated Personnel be approved and/or ratified. All personnel will be properly elected in accordance with District policies and salary schedule.

Name	Program/Site	Task/Project	Type	Rate	Hours/Days Cap	Applicable Payrolls
Nava, Valeria	JBHS	Class Size	Stipend	$2,250.00	1	01/01/2026 - 05/29/2026
Nicol, Douglas	Muir	Saturday Teacher	Daily	$169.90	1	05/16/2026
Niwa, Jennifer	Providencia	Other Hourly	Hourly	$39.67	3.5	06/01/2026
Obregon, Gabriel	Huerta	Saturday Teacher	Hourly	$169.90	1	05/16/2026
O'Flaherty, Ellie	Child Development	Summer ATB Assignment	Hourly	$24.42	272	06/03/2026 - 08/07/2026
Oganyan, Victoria	JBHS	Class Size	Stipend	$6,500.00	1	08/08/2025 - 05/29/2026
Oldroyd, Jennifer	Health Services	Retention Bonus	Stipend	$8,000.00	1	08/08/2025 - 05/31/2026
Oliva, Xochil	Washington	Summer School Teacher	Hourly	$53.67	105	06/04/2026 - 07/09/2026
Papavasiliou, Demetrula	JBHS	Summer School Teacher	Hourly	$53.46	150	06/04/2026 - 07/16/2026
Park, Judy	Jefferson	Summer School Teacher	Hourly	$53.46	105	06/04/2026 - 07/09/2026
Pashen, Chelsea	Washington	Summer School Teacher	Hourly	$53.67	105	06/04/2026 - 07/09/2026
Peebles, John	JBHS	CIF Asst Coach Track and Field	Stipend	$127.00	3	05/01/2026 - 05/31/2026
Pepes, Chris	BHS	Class Coverage	Hourly	$54.73	1	05/01/2026 - 0/31/2026
Pepes, Chris	BHS	Class Coverage	Hourly	$54.73	1	05/01/2026 - 05/31/2026
Peraza, Cristina	Washington	Summer School Teacher	Hourly	$66.99	105	06/04/2026 - 07/09/2026
Perez, Kimberly	Miller	Other Hourly	Hourly	$39.67	3	06/02/2026
Perlis, Deborah	JBHS	Summer School Teacher	Hourly	$66.99	150	06/04/2026 - 07/16/2026
Petrenco, Tanase	BHS	Class Coverage	Hourly	$54.73	1	05/01/2026 - 05/31/2026
Petrenco, Tanase	BHS	Saturday Teacher	Hourly	$169.90	1	05/02/2026 - 05/31/2026
Pierce, Emily	JBHS	Other Hourly	Hourly	$39.67	25	05/01/2026 - 05/31/2026
Popiel, Matthew	JBHS	Combo Class	Stipend	$200.00	1	01/01/2026 - 05/29/2026
Pozos, Adriana	Washington	Other Hourly	Hourly	$39.67	10	06/01/2026 - 06/30/2026
Pozo, Stephanie	Washington	Summer School Teacher	Hourly	$53.67	105	06/04/2026 - 07/09/2026
Ragle, Dana	Huerta	Class Size	Stipend	$350.00	1	01/05/2026 - 05/29/2026
Raisbeck, Erica	JBHS	Combo Class	Stipend	$600.00	1	01/01/2026 - 05/29/2026
Raisbeck, Erica	JBHS	Summer School Teacher	Hourly	$66.99	75	06/04/2026 - 07/16/2026
Rappaport, Ella	JBHS	Class Size	Stipend	$425.00	1	01/01/2026 - 05/29/2026
Reaves, Harvey	JBHS	Other Hourly	Hourly	$39.67	4	04/01/2026 - 04/30/2026
Reily, Michael	JBHS	Class Size	Stipend	$25.00	1	01/01/2026 - 05/29/2026
Reyes, Dali	JBHS	Combo Class	Stipend	$200.00	1	01/01/2026 - 05/29/2026
Reyes, Dali	JBHS	Summer School Teacher	Hourly	$66.99	150	06/04/2026 - 07/16/2026
Rios, Martha	McKinley	Summer School Teacher	Hourly	$24.42	120.75	06/04/2026 - 07/09/2026
Robertson, Connor	Washington	Summer School Teacher	Hourly	$66.99	105	06/04/2026 - 07/09/2026
Robertson, William	Miller	Other Hourly	Hourly	$39.67	3	06/02/2026
Rodriguez, Lisa	JBHS	Summer School Teacher	Hourly	$53.46	150	06/04/2026 - 07/16/2026
Romero, Victoria	Washington	Summer School Teacher	Hourly	$53.67	105	06/04/2026 - 07/09/2026
Rosales, Peggy	Child Development	Summer ATB Assignment	Hourly	$29.00	88	06/03/2026 - 08/07/2026
Ruback, Sharyl	JBHS	Summer School Teacher	Hourly	$66.99	150	06/04/2026 - 07/16/2026
Ryffe, Brandon	BHS	Class Coverage	Hourly	$54.73	3	05/01/2026 - 05/31/2026
Sajor, Mary Morgen	Special Ed	Home Teacher	Hourly	$42.37	14	05/29/2026 - 06/12/2026
Sarkis-Janoyan, Talar	JBHS	Summer School Teacher	Hourly	$66.99	150	06/04/2026 - 07/16/2026
Schleinkofer, Lori	Special Ed	Add'l Duties	Hourly	$67.54	145	07/01/2026 - 07/31/2026
Seale, Andrea	Magnolia Park	Summer School Teacher	Hourly	$102.62	150	06/04/2026 - 07/09/2026
Setaghian, Natalie	BHS	Class Coverage	Hourly	$54.73	2	05/01/2026 - 05/31/2026
Shafer, Chelsea	JBHS	Summer School Teacher	Hourly	$66.99	150	06/04/2026 - 07/16/2026

TO: Board of Education / Superintendent Consent 06/25/2026

SUBMITTED BY: Human Resources Services

SUBJECT: Certificated Personnel - Report Number 25-26-22. It is recommended that the following appointments for Certificated Personnel be approved and/or ratified. All personnel will be properly elected in accordance with District policies and salary schedule.

Name	Program/Site	Task/Project	Type	Rate	Hours/Days Cap	Applicable Payrolls
Shalts, Rachel	Washington	Summer School Teacher	Hourly	$66.99	105	06/04/2026 - 07/09/2026
Shazarian, Arpine	Jefferson	Summer School Teacher	Hourly	$53.46	105	06/04/2026 - 07/09/2026
Sivaraman, Rohini	JBHS	Class Size	Stipend	$1,100.00	1	01/01/2026 - 05/29/2026
Smith, Aiyana	Washington	Summer School Teacher	Hourly	$66.99	105	06/04/2026 - 07/09/2026
Spargur, Conrad	JBHS	Class Size	Stipend	$2,375.00	1	01/01/2026 - 05/29/2026
Steinberg, Jessie	JBHS	Other Hourly	Hourly	$39.67	4.91	05/01/2026 - 05/31/2026
Stilgenbauer, Kymberly	Child Development	Summer ATB Assignment	Hourly	$34.70	350	06/03/2026 - 08/07/2026
Stinson, James	Stevenson	Summer School Teacher	Hourly	$53.46	52.5	06/04/2026 - 07/09/2026
Stires, Megan	Mann	Summer School Teacher	Hourly	$66.99	105	06/04/2026 - 07/09/2026
Strawn, Kathryn	Stevenson	Summer School Teacher	Hourly	$53.46	105	06/04/2026 - 07/09/2026
Sullivan, Benjamin	Luther	Class Size	Stipend	$450.00	1	01/01/2026 - 05/29/2026
Sutter, Sandra	Stevenson	Summer School Teacher	Hourly	$53.46	105	06/04/2026 - 07/09/2026
Sutton, Dara	Washington	Summer School Teacher	Hourly	$66.99	105	06/04/2026 - 07/09/2026
Tait, Holly	JBHS	Combo Class	Stipend	$600.00	1	01/01/2026 - 05/29/2026
Tait, Holly	JBHS	Summer School Teacher	Hourly	$66.99	150	06/04/2026 - 07/16/2026
Tait, Holly	Luther	Class Size	Stipend	$800.00	1	01/01/2026 - 05/29/2026
Tapanyan, Anie	Huerta	Class Size	Stipend	$50.00	1	01/05/2026 - 05/29/2026
Tate, Derwin	JBHS	Combo Class	Stipend	$400.00	1	01/01/2026 - 05/29/2026
Thompson, Wendy	Jefferson	Summer School Teacher	Hourly	$53.46	105	06/04/2026 - 07/09/2026
Topalian, Talar	Providencia	Other Hourly	Hourly	$39.67	3.5	06/01/2026
Truong, Hung	JBHS	Other Hourly	Hourly	$39.67	1	05/20/2026
Truong, Hung	JBHS	Other Hourly	Hourly	$39.67	10.75	05/01/2026 - 05/31/2026
Turley, Maria	McKinley	Summer School Teacher	Hourly	$53.46	105	06/04/2026 - 07/09/2026
Vaughan, Janelle	Jefferson	Summer School Teacher	Hourly	$53.46	105	06/04/2026 - 07/09/2026
Wahe, Debra	Luther	Intervention Teaching	Hourly	$53.46	5	08/01/2025 - 12/31/2025
Wahe, Debra	Luther	Other Hourly	Hourly	$39.67	1	05/20/2026 - 05/29/2026
Warner, Jackson	Stevenson	Summer School Teacher	Hourly	$53.46	105	06/04/2026 - 07/09/2026
Waters, Melissa	Jefferson	Summer School Teacher	Hourly	$53.46	52.5	06/04/2026 - 07/09/2026
Weber, Eric	McKinley	Summer School Teacher	Hourly	$24.42	120.75	06/04/2026 - 07/09/2026
Weber, Rebecca	Health Services	Retention Bonus	Stipend	$8,000.00	1	08/08/2025 - 05/31/2026
Weiner, Alexis	JBHS	Class Size	Stipend	$200.00	1	01/01/2026 - 05/29/2026
Weiner, Alexis	Instructional Services	Other Hourly	Hourly	$39.67	2	03/30/2026
Weiner, Alexis	Instructional Services	Other Hourly	Hourly	$39.67	6	06/01/2026
Wenzel, Anne	JBHS	Combo Class	Stipend	$200.00	1	01/01/2026 - 05/29/2026
Wenzel, Anne	Washington	Summer School Teacher	Hourly	$53.67	105	06/04/2026 - 07/09/2026
Wenzel, Anne	BHS	Other Hourly	Hourly	$39.67	3	05/16/2026 - 05/16/2026
Wenzel, Anne	JBHS	Saturday Teacher	Hourly	$169.90	1	05/16/2026
Wisehaupt, Jamie	Huerta	Class Size	Stipend	$300.00	1	01/05/2026 - 05/29/2026
Velasquez, Silvia	McKinley	Summer School Teacher	Hourly	$53.46	105	06/04/2026 - 07/09/2026
Yanez, Lucille	Magnolia Park	Summer School Teacher	Hourly	$91.18	150	06/04/2026 - 07/09/2026
Vargas, Theresa	Instructional Services	Other Hourly	Hourly	$39.67	6	06/01/2026
Yew, Christina	Stevenson	Summer School Teacher	Hourly	$53.46	105	06/04/2026 - 07/09/2026
Zimny, Pamela	JBHS	Class Size	Stipend	$1,550.00	1	01/01/2026 - 05/29/2026

Name	Position	Program/Site	%Time FTE	Range & Step	Basis	Effective Date	Ending Date	Remarks
Retirement								
LANGE, Erin	Paraeducator - Severely Impaired	01.0-65000.0-57601-11106-2110-5330000	.75	45-VI	D	05-28-26		Burbank Adult School
Resignation								
ARY, Shannon	PE Assistant	01.0-00000.0-15000-10000-2110-7420000	.7500	36-IV	C	05-29-26		Edison Elementary
DANAO, Zuleika	Paraeducator	01.0-01500.0-47600-10000-2110-2030000	.6250	37-VI	D	05-15-26		Emerson Elementary
FINNEY, Thomas	Behavior Intervention Assistant	01.0-65000.0-57601-11905-2110-7440000	.8125	45-IV	D	05-28-26		Special Education
HARRIS, Haylee	Paraeducator – English Language Learner	01.0-01500.0-11119-10000-2110-4310000	.8125	37-V	D	05-28-26		Burbank High School
McDONALD, Rebekah	Behavior Intervention Assistant	01.0-65000.0-57601-11905-2110-7440000	.8125	45-V	D	05-28-26		Special Education
MONTOYA, Cristy	Behavior Intervention Assistant	01.0-65000.0-57601-11905-2110-7440000	.8125	45-II	D	07-09-26		Special Education
SUAREZ, Malia	Paraeducator	01.0-00000.0-11100-10000-2110-2100000	.3125	36-III	D	05-28-26		Miller Elementary
QUEZADA I, Ramiro	Paraeducator – Special Education	01.0-65000.0-57602-11200-2110-4310000	.8125	38-II	D	06-03-26		Burbank High School
Additional Compensation for Healthcare								
RODRIGUEZ, Cynthia	Behavior Intervention Assistant	01.0-65000.0-57601-11905-2110-7440000	.8125	45-I	D	01-01-26	05-28-26	Special Education
Additional Compensation for Bilingual Translation								
PEREZ, Betty	School Office Manager Middle School	01.0-00000.0-00000-27000-2410-321000	1.0	43-I	A	05-08-26	06-30-26	Huerta Middle School
JOHNSON, Rachael	Paraeducator – Special Education	01.0-33100.0-57602-11200-2110-320000	.8125	38-IV	D	06-08-26	07-16-26	Special Education

Basis: A= 12 months, B= 11 months, C= 10 months, D= 9 months, E= Adult School employee working less than 10 months, F= Short-term employees, assigned to provide services which will not be needed on a continuing basis, G= Substitute, H= Long term substitute, I= Temporary reclassification.

Name	Position	Program/Site	%Time FTE	Range & Step	Basis	Effective Date	Ending Date	Remarks
Change of Assignment – Classification/Location/FTE								
DUARTE VERAS, Patricia	Paraeducator	01.0-00000.0-11100-10000-2110-2010000	.625	36-I	D	08-12-26		Disney Elementary
FLORES, Karla	Behavior Intervention Assistant	01.0-65000.0-57601-11905-2110-7440000	.8125	45-IV	D	08-12-26		Special Education
KIM, Candace	Behavior Intervention Assistant	01.0-65000.0-57601-11905-2110-7440000	.8125	45-VI	D	08-12-26		Special Education
Election – Monthly								
GOMEZ MENDEZ, Valerie	Behavior Intervention Assistant	01.0-65000.0-57601-11905-2110-7440000	.8125	45-IV	D	08-12-26		Special Education
Election – Hourly								
ALVAREZ ARTEAGA, Johana	Paraeducator – Special	01.0-00000.0-00000-10009-2930-3210000		38-III	D	05-22-26	05-22-26	Huerta Middle School
BURKS, Michelle	Campus Supervisor-Elementary (Substitute)	01.0-00000.0-11100-10009-2960-7550000		$18.18	F	05-26-26		Facilities
DALTON, Kristin	Attendance Technician	01.0-00000.0-00000-27000-2430-3210000		35-II	C	05-08-26	05-08-26	Huerta Middle School
DE LA CRUZ, Ruby	Instructional Media Specialist – Middle School	01.0-00000.0-00000-10009-2930-3210000		46-II	B	05-22-26	05-22-26	Huerta Middle School
DELA ROSA, Losineh	Behavior Intervention Assistant	01.0-65000.0-57601-11905-2140-7440000		45-III	D	05-08-26	05-08-26	Special Education
DELA ROSA, Losineh	Behavior Intervention Assistant	01.0-65000.0-57601-11905-2130-7440000		45-III	D	05-08-26	05-08-26	Special Education (additional assignment)
DE LEON, Carmen	Behavior Intervention Assistant	01.0-65000.0-57601-11905-2140-7440000		45-V	D	05-09-26	05-09-26	Special Education
DUARTE, Guadalupe	Custodian (Substitute)	01.0-00100.0-00000-82100-2260-7520000		$19.53	F	05-26-26		Facilities
ETTERBEEK, Brenda	Visual & Performing Arts Instructor	01.0-67700.0-11100-10000-2170-2029000		$50.00	F	06-04-26		Edison Elementary
FRAGOSO, Leticia	Paraeducator – Special	01.0-65000.0-57601-11100-2140-7440000		45-VI	D	05-02-26	05-02-26	Burroughs High School

Basis: A= 12 months, B= 11 months, C= 10 months, D= 9 months, E= Adult School employee working less than 10 months, F= Short-term employees, assigned to provide services which will not be needed on a continuing basis, G= Substitute, H= Long term substitute, I= Temporary reclassification.

Name	Position	Program/Site	%Time FTE	Range & Step	Basis	Effective Date	Ending Date	Remarks
	Education							
Election – Hourly (Continued)								
FRAGOSO, Leticia	Paraeducator – Special Education	01.0-65000.0-57601-11100-2140-7440000		45-VI	D	05-28-26	05-28-26	Burroughs High School (additional assignment)
HERNANDEZ DE RAMOS, Maria Elena	Food Service Assistant (Substitute)	13.0-53100.0-00000-37000-2260-7490000		$19.06	F	05-29-26		Facilities
LEIVA, Nereyda	Paraeducator – Special Education	01.0-65000.0-57602-11100-2130-7440000		38-VI	D	05-08-26	05-09-26	Special Education
LINARES, Randy	Behavior Intervention Assistant	01.0-65000.0-57601-11905-2140-7440000		45-II	D	05-16-26	05-16-26	Special Education
SALCEDO LEON, Liliana	Custodian (Substitute)	01.0-00100.0-00000-82100-2260-7520000		$19.53	F	05-22-26		Facilities
SANDOVAL MADRIGAL, Gabriela	Paraeducator – Special Education	01.0-65000.0-57601-11905-2130-7440000		38-I	D	04-22-26	04-23-26	Special Education
SANDOVAL MADRIGAL, Gabriela	Paraeducator – Special Education	01.0-65000.0-57601-11905-2140-7440000		38-I	D	04-22-26	04-23-26	Special Education
SMITH, Michael	Custodian (Substitute)	01.0-00100.0-00000-82100-2260-7520000		$19.53	F	05-26-26		Facilities
SURICO, Mariah	Paraeducator – Special Education	01.0-00000.0-00000-27000-2150-4320000		38-VI	D	01-01-26	05-31-26	Burroughs High School
RODRIGUEZ BERISTAIN, Alejandra G.	Custodian (Substitute)	01.0-00100.0-00000-82100-2260-7520000		$19.53	F	06-01-26		Facilities
SILVA HERNANDEZ, Francisco	Custodian (Substitute)	01.0-00100.0-00000-82100-2260-7520000		$19.53	F	06-03-26		Facilities
VALADEZ PEREZ, Maria I.	Custodian (Substitute)	01.0-00100.0-00000-82100-2260-7520000		$19.53	F	05-26-26		Facilities

Basis: A= 12 months, B= 11 months, C= 10 months, D= 9 months, E= Adult School employee working less than 10 months, F= Short-term employees, assigned to provide services which will not be needed on a continuing basis, G= Substitute, H= Long term substitute, I= Temporary reclassification.

Name	Position	Program/Site	%Time FTE	Range & Step	Basis	Effective Date	Ending Date	Remarks
Election – Student Helpers								
HK0341086	YETP Student	01.0-58100.0-57602-11100-2933-7440000		$16.90	F	05-20-26	06-30-27	Special Education
XG0415110	YETP Student	01.0-58100.0-57602-11100-2933-7440000		$16.90	F	05-26-26	06-30-27	Special Education
SG2423950	YETP Student	01.0-58100.0-57602-11100-2933-7440000		$16.90	F	05-26-26	06-30-27	Special Education
MX4595702	YETP Student	01.0-58100.0-57602-11100-2933-7440000 01.0-65200.0-57602-11100-2933-7440000	.50 .50	$16.90	F	05-26-26	06-30-27	Special Education
Election – Summer School								
GOMEZ NAJERA, Stephanie	Paraeducator - English Language Learner	01.0-26000.0-11100-10000-2130-5480000		37-I	E	06-08-26	07-09-26	Stevenson Elementary
GONZALEZ, Maria	Campus Supervisor - Elementary	01.0-26000.0-11100-10009-2930-5480000		35-VI	D	06-08-26	07-09-26	McKinley Elementary
GONZALEZ DE ORTIZ, Juana	Serving Kitchen Operator	13.0-53100.0-00000-37000-2210-7490000		40-VI	D	06-08-26	07-09-26	Washington Elementary
GORI, Laurie	Behavior Intervention Assistant	01.0-65000.0-57601-11905-2130-5480000		45-VI	D	06-08-26	07-16-26	Burroughs High School
GUEFFROY, Katherine	Educational Interpreter I	01.0-65000.0-57602-11104-2130-5480000		55-VI	D	06-08-26	07-16-26	Burroughs High School
GUTCHES, Mackenna	Behavior Intervention Assistant	01.0-65000.0-57601-11905-2130-5480000		45-VI	D	06-08-26	07-16-26	Burroughs High School
GUTIERREZ, Silvia	Behavior Intervention Assistant	01.0-65000.0-57601-11905-2130-5480000		45-VI	D	06-08-26	07-16-26	Burroughs High School
HAKOBYAN, Gyulnara	Paraeducator - English Language Learner	01.0-26000.0-11100-10000-2130-5480000		37-IV	E	06-08-26	07-09-26	Miller Elementary
HAKOP CHAKERIAN, Janet	Serving Kitchen Operator	13.0-53100.0-00000-37000-2210-7490000		40-VI	D	06-08-26	07-09-26	McKinley Elementary

Basis: A= 12 months, B= 11 months, C= 10 months, D= 9 months, E= Adult School employee working less than 10 months, F= Short-term employees, assigned to provide services which will not be needed on a continuing basis, G= Substitute, H= Long term substitute, I= Temporary reclassification.

Name	Position	Program/Site	%Time FTE	Range & Step	Basis	Effective Date	Ending Date	Remarks
Election – Summer School (Continued)								
HANADA. Shigeko	Campus Supervisor - Elementary	01.0-26000.0-11100-10009-2930-5480000		35-VI	D	06-08-26	07-09-26	Stevenson Elementary
HARRIS, Samuel	Behavior Intervention Assistant	01.0-65000.0-57601-11905-2130-5480000		45-VI	D	06-08-26	07-16-26	Burroughs High School
HARTOUN MARDIRSAN, Odet	Paraeducator Children's Center	12.0-90602.0-11100-10000-2130-7450000		37-VI	D	06-08-26	08-07-26	McKinley ATB
HAWA, Sara	Paraeducator - Special Education	01.0-65000.0-57602-11100-2130-5480000		38-V	C	06-08-26	07-16-26	Burroughs High School
HERRERA, Maria Elena	Behavior Intervention Assistant	01.0-65000.0-57601-11905-2130-5480000		45-VI	D	06-08-26	07-09-26	Horace Mann
HONORE, Bavet	Paraeducator - Children's Center	12.0-90602.0-11100-10000-2130-7450000		37-VI	D	06-08-26	07-09-26	McKinley Elementary
HUFF, Jacob	Behavior Intervention Assistant	01.0-65000.0-57601-11905-2130-5480000		45-III	D	06-08-26	07-09-26	Washington Elementary
JIMENEZ, Christina	Paraeducator - Healthcare	01.0-65000.0-57601-11908-2130-5480000		41-I	D	06-08-26	07-16-26	Burroughs High School
JIMENEZ, Daniel	Behavior Intervention Assistant	01.0-65000.0-57601-11905-2130-5480000		45-II	D	06-08-26	07-09-26	Washington Elementary
JOJ SAQUIC, Norman	Behavior Intervention Assistant	01.0-65000.0-57601-11905-2130-5480000		45-III	D	06-08-26	07-09-26	Washington Elementary
KHACHATOURIANS, Klara	Paraeducator - English Language Learner	01.0-26000.0-11100-10000-2130-5480000		37-VI	E	06-08-26	07-09-26	Jefferson Elementary
KHUDNEV, Anton	Behavior Intervention Assistant	01.0-65000.0-57601-11905-2130-5480000		45-IV	D	06-08-26	07-16-26	Burroughs High School
KIRKPATRICK, Gloria	Behavior Intervention Assistant	01.0-65000.0-57601-11905-2130-5480000		45-VI	D	06-08-26	07-09-26	Washington Elementary

Basis: A= 12 months, B= 11 months, C= 10 months, D= 9 months, E= Adult School employee working less than 10 months, F= Short-term employees, assigned to provide services which will not be needed on a continuing basis, G= Substitute, H= Long term substitute, I= Temporary reclassification.

Name	Position	Program/Site	%Time FTE	Range & Step	Basis	Effective Date	Ending Date	Remarks
Election – Summer School (Continued)								
KNOOP, Nicole	Paraeducator - Severely Impaired	01.0-65000.0-57601-11106-2130-5480000		45-VI	D	06-08-26	07-16-26	Burroughs High School
LARA, Armida	Paraeducator - Children's Center	12.0-90602.0-11100-10000-2130-7450000		37-VI	D	06-08-26	08-07-26	McKinley ATB
LEE, Daly	Behavior Intervention Assistant	01.0-65000.0-57601-11905-2130-5480000		45-VI	D	06-08-26	07-16-26	Burroughs High School
LEIVA, Nereyda	Paraeducator - Special Education	01.0-65000.0-57602-11100-2130-5480000		38-VI	C	06-08-26	07-16-26	Burroughs High School
LICEAGA VENEGAS, Karol	Behavior Intervention Assistant	01.0-65000.0-57601-11905-2130-5480000		45-III	D	06-08-26	07-09-26	Washington Elementary
LONGBOY, Jessica	Behavior Intervention Assistant	01.0-65000.0-57601-11905-2130-5480000		45-V	D	06-08-26	07-09-26	Washington Elementary
LOPEZ, Eveling	Behavior Intervention Assistant	01.0-65000.0-57601-11905-2130-5480000		45-IV	D	06-08-26	07-09-26	Washington Elementary
LOPEZ, Jennifer	Serving Kitchen Operator	13.0-53100.0-00000-37000-2210-7490000		40-III	D	06-08-26	07-09-26	Stevenson Elementary
LOURENCO, Susan	Behavior Intervention Assistant	01.0-65000.0-57601-11905-2130-5480000		45-IV	D	06-08-26	07-16-26	Burroughs High School
LOYNES, Mary	Paraeducator - Severely Impaired	01.0-65000.0-57601-11106-2130-5480000		45-I	D	06-08-26	07-09-26	Jefferson Elementary
LOZANO, John	Paraeducator - Healthcare	01.0-65000.0-57601-11908-2130-5480000		41-VI	D	06-08-26	07-16-26	Burroughs High School
LOZANO, Lauren	Educational Interpreter II	01.0-65000.0-57602-11104-2130-5480000		62-IV	D	06-08-26	07-16-26	Burroughs High School
MADRIGAL, Mariah	Paraeducator - Severely Impaired	01.0-65000.0-57601-11106-2130-5480000		45-V	D	06-08-26	07-16-26	Burroughs High School

Basis: A= 12 months, B= 11 months, C= 10 months, D= 9 months, E= Adult School employee working less than 10 months, F= Short-term employees, assigned to provide services which will not be needed on a continuing basis, G= Substitute, H= Long term substitute, I= Temporary reclassification.

Name	Position	Program/Site	%Time FTE	Range & Step	Basis	Effective Date	Ending Date	Remarks
Election – Summer School (Continued)								
MAGALLANES, Josephine	Campus Supervisor	01.0-90201.0-11100-10009-2930-7428710		35-VI	D	06-08-26	07-16-26	Burroughs High School
MAGANA RODRIGUEZ, Destiny	Behavior Intervention Assistant	01.0-65000.0-57601-11905-2130-5480000		45-I	D	06-08-26	07-09-26	Washington Elementary
MANSOURIAN, Verjineh	Paraeducator - Severely Impaired	01.0-65000.0-57601-11106-2130-5480000		45-VI	D	06-08-26	07-16-26	Burroughs High School
MARTIN, Brisa	Behavior Intervention Assistant	01.0-65000.0-57601-11905-2130-5480000		45-III	D	06-08-26	07-09-26	Washington Elementary
MARTINEZ, Rebecca	Behavior Intervention Assistant	01.0-65000.0-57601-11905-2130-5480000		45-I	D	06-08-26	07-09-26	Washington Elementary
Mc COOLE, Lisa	Behavior Intervention Assistant	01.0-65000.0-57601-11905-2130-5480000		45-VI	D	06-08-26	07-16-26	Burroughs High School
Mx DONALD, Kailey	Behavior Intervention Assistant	01.0-65000.0-57601-11905-2130-5480000		45-V	D	06-08-26	07-16-26	Burroughs High School
MEDINA, Jennifer	Behavior Intervention Assistant	01.0-65000.0-57601-11905-2130-5480000		45-III	D	06-08-26	07-09-26	Washington Elementary
MELIKIAN, Lilia	Paraeducator - Children's Center	12.0-90602.0-11100-10000-2130-7450000		37-VI	D	06-08-26	07-09-26	McKinley Elementary
MENDOZA, Alvaro	Behavior Intervention Assistant	01.0-65000.0-57601-11905-2130-5480000		45-VI	D	06-08-26	07-16-26	Burroughs High School
MIKAELIAN, Hanna	Behavior Intervention Assistant	01.0-65000.0-57601-11905-2130-5480000		45-V	D	06-08-26	07-09-26	Washington Elementary
MIRA, Natalie	Paraeducator - English Language Learner	01.0-26000.0-11100-10000-2130-5480000		37-II	E	06-08-26	07-09-26	Miller Elementary
MIRZAKHANIAN, Alice	Paraeducator Children's Center	12.0-90602.0-11100-10000-2130-7450000		37-VI	D	06-08-26	08-07-26	Emerson ATB

Basis: A= 12 months, B= 11 months, C= 10 months, D= 9 months, E= Adult School employee working less than 10 months, F= Short-term employees, assigned to provide services which will not be needed on a continuing basis, G= Substitute, H= Long term substitute, I= Temporary reclassification.

Name	Position	Program/Site	%Time FTE	Range & Step	Basis	Effective Date	Ending Date	Remarks
Election – Summer School (Continued)								
MOHAMED, Yassmin	Behavior Intervention Assistant	01.0-65000.0-57601-11905-2130-5480000		45-VI	D	06-08-26	07-09-26	Washington Elementary
MOLINA, Monica	Behavior Intervention Assistant	01.0-65000.0-57601-11905-2130-5480000		45-III	D	06-08-26	07-09-26	Washington Elementary
MONTOYA. Cristy	Behavior Intervention Assistant	01.0-65000.0-57601-11905-2130-5480000		45-II	D	06-08-26	07-09-26	Washington Elementary
MORALES, Miguel	Instructional Media Specialist	01.0-26000.0-00000-24200-2230-5480000		42-IV	D	06-08-26	07-09-26	Stevenson Elementary
MORAN, Maria	Paraeducator - Severe Behavioral II	01.0-65000.0-57601-11106-2130-5480000		47-VI	D	06-08-26	07-16-26	Burroughs High School
MORAN-PEREZ. Diana	Behavior Intervention Assistant	01.0-65000.0-57601-11905-2130-5480000		45-V	D	06-08-26	07-09-26	Washington Elementary
MUNOZ OJEDA, Diana	Behavior Intervention Assistant	01.0-65000.0-57601-11905-2130-5480000		45-VI	D	06-08-26	07-16-26	Burroughs High School
MURADYAN, Ani	Behavior Intervention Assistant	01.0-65000.0-57601-11905-2130-5480000		45-III	D	06-08-26	07-16-26	Burroughs High School
MUROS, Rosa	Behavior Intervention Assistant	01.0-65000.0-57601-11905-2130-5480000		45-VI	D	06-08-26	07-09-26	Horace Mann
NAVA, Armando	Paraeducator - Severely Impaired	01.0-65000.0-57601-11106-2130-5480000		45-III	D	06-08-26	07-16-26	Burroughs High School
NAVASEKIAN, Ayda	Paraeducator - English Language Learner	01.0-26000.0-11100-10000-2130-5480000		37-V	E	06-08-26	07-09-26	Miller Elementary
NEMINOVA, Victoriya	Behavior Intervention Assistant	01.0-65000.0-57601-11905-2130-5480000		45-III	D	06-08-26	07-16-26	Burroughs High School
NGUYEN, Loan	Behavior Intervention Assistant	01.0-65000.0-57601-11905-2130-5480000		45-VI	D	06-08-26	07-16-26	Burroughs High School
NUNEZ, Claudia	Campus Supervisor -	11.0-63910.0-41101-83000-2230-5330000		36-VI	D	06-01-26	07-02-26	Burbank Adult School

Basis: A= 12 months, B= 11 months, C= 10 months, D= 9 months, E= Adult School employee working less than 10 months, F= Short-term employees, assigned to provide services which will not be needed on a continuing basis, G= Substitute, H= Long term substitute, I= Temporary reclassification.

Name	Position	Program/Site	%Time FTE	Range & Step	Basis	Effective Date	Ending Date	Remarks
	Adult School							
Election – Summer School (Continued)								
OCHOA, Steven	Food Service Assistant	13.0-53100.0-00000-37000-2210-7490000		37-IV	D	06-08-26	07-16-26	Burroughs High School
PALACIO, Colleen	Behavior Intervention Assistant	01.0-65000.0-57601-11905-2130-5480000		45-VI	D	06-08-26	07-09-26	Washington Elementary

Signature _____

Title: Oscar Macias, Ed. D, Interim Superintendent

Basis: A= 12 months, B= 11 months, C= 10 months, D= 9 months, E= Adult School employee working less than 10 months, F= Short-term employees, assigned to provide services which will not be needed on a continuing basis, G= Substitute, H= Long term substitute, I= Temporary reclassification.

Burbank Unified School District
Fiscal Services

REPORT TO THE BOARD

TO:	Members of the Board of Education
FROM:	Maricela Salinas, Director, Fiscal Services
PREPARED BY:	Cheretta Wade, Administrative Secretary II, Business Services
SUBMITTED BY:	Cheretta Wade, Administrative Secretary II, Business Services
DATE:	June 25, 2026
SUBJECT:	Warrants Report – May 1, 2026 through May 31, 2026

Background:
Pursuant to Education Code requirements, the District provides a monthly summary of warrants issued for payment of authorized obligations. The attached Warrant Report for the period May 1, 2026, through May 31, 2026, reflects expenditures processed across multiple District funds. This informational item is placed on the consent calendar to provide transparency into District financial activity. The summary tables below aggregate expenditures by fund and by major object classification.

Summary of Warrants by Fund

Fund Number	Fund Name	Total Amount
01	General Fund	$6,264,902.33
11	Adult Education Fund	$119,350.02
12	Child Development Fund	$70,011.93
13	Cafeteria Fund	$332,600.24
21	Building Fund	$192,836.15
40	Special Reserve Fund	$157,425.48
67	Self-Insurance Fund	$230,907.17
76	Warrant/Agency Clearing Fund	$495,363.13
	Total	**$7,863,396.45**

Discussion/Issues:
The monthly Warrant Report summarizes all payments issued to vendors across the District's various funding sources. Providing this detailed report each month promotes transparency, strengthens internal financial oversight, and ensures the Board remains informed of District expenditures in a timely manner. This ongoing practice supports responsible fiscal management, enhances communication with stakeholders, and reflects the District's commitment to financial accountability. The transaction listing for the reporting period is attached for review.

Fiscal Impact: (if any)
$7,863,396.45

Recommendation:
It is recommended that the Board of Education approve the Warrant Report for the period May 1, 2026 through May 31, 2026, as presented. All expenditures have been processed in accordance with Education Code requirements, Board Policy, and approved purchase orders or contracts.

Vendor Name	Warrant Number	Warrant Amount	Payment Doc ID	Accounting Line No.	Fund	Sub-Fund	Resource	Project Year	Goal/Categorical	Function/Activity	Object	School Location/Dept	Line Amount
2 GUYS TERMITE, INC.	000000022731254	980.00	GAXI-7520000-000000282032-1	1	01	0	81500	0	00000	81100	5631	7520000	980.00
4A CRANE SERVICE CO.	000000022736647	250.00	GAXI-7520000-000000281930-1	1	01	0	81500	0	00000	81100	5611	7520000	250.00
5D SPECTRUM	000000022739029	6,000.00	GAXI-7460000-000000282578-1	1	01	0	90711	0	11100	10000	5850	7460000	6,000.00
A2Z EDUCATIONAL ADVOCATES	000000022728866	22,000.00	GAXI-7440000-000000278959-1	1	01	0	65000	0	50010	21000	5820	7440000	22,000.00
AACA, INC	000000022728867	60,011.84	GAXI-7440000-000000281615-1	1	01	0	65000	0	57601	11800	5810	7440000	60,011.84
ACADEMIC CHURCH & CHOIR GOWNS MFG CO INC	000000022728868	356.92	GAXI-5300000-000000281773-1	1	01	0	90201	0	11100	10000	4310	5300000	356.92
ACCO BRANDS USA LLC	000000022765985	2,492.18	GAXI-2150000-000000283596-1	2	01	0	90201	0	11100	10000	4310	2150000	2,163.30
ACCO BRANDS USA LLC	000000022765985	2,492.18	GAXI-2150000-000000283595-1	1	01	0	90201	0	11100	10000	4310	2150000	328.88
ACCUQUILT	000000022761243	139.63	GAXI-2010000-000000283194-1	1	01	0	67700	1	11100	10000	4310	2010000	139.63
ACE LS PARTY RENTS	000000022731255	512.50	GAXI-5300000-000000281774-1	1	01	0	00000	0	11100	27000	4310	5300000	512.50
ACSA - ASSOC OF CALIFORNIA SCHLS ADMIN	000000022733987	25.00	GAXI-0000000-000000282279-1	1	76	0	00000	0	00000	00000	9517	0000000	25.00
ACSA - ASSOC OF CALIFORNIA SCHLS ADMIN	000000022756389	3,876.09	GAXI-0000000-000000283103-1	1	76	0	00000	0	00000	00000	9517	0000000	3,876.09
ADAM DEVORE	000000022771246	99.90	GAXI-3210000-000000283571-1	1	01	0	00000	0	11100	10000	4790	3210000	99.90
ADAMS SILVA & MCNALLY LLP	000000022765986	28,455.50	GAXI-7440000-000000283078-1	1	01	0	65000	0	50010	21000	5820	7440000	797.50
ADAMS SILVA & MCNALLY LLP	000000022765986	28,455.50	GAXI-7440000-000000283079-1	2	01	0	65000	0	50010	21000	5820	7440000	115.50
ADAMS SILVA & MCNALLY LLP	000000022765986	28,455.50	GAXI-7440000-000000283080-1	3	01	0	65000	0	50010	21000	5820	7440000	231.00
ADAMS SILVA & MCNALLY LLP	000000022765986	28,455.50	GAXI-7440000-000000283081-1	4	01	0	65000	0	50010	21000	5820	7440000	5,026.00
ADAMS SILVA & MCNALLY LLP	000000022765986	28,455.50	GAXI-7440000-000000283082-1	5	01	0	65000	0	50010	21000	5820	7440000	6,999.50
ADAMS SILVA & MCNALLY LLP	000000022765986	28,455.50	GAXI-7440000-000000283083-1	6	01	0	65000	0	50010	21000	5820	7440000	4,398.00
ADAMS SILVA & MCNALLY LLP	000000022765986	28,455.50	GAXI-7440000-000000283084-1	7	01	0	65000	0	50010	21000	5820	7440000	938.50
ADAMS SILVA & MCNALLY LLP	000000022765986	28,455.50	GAXI-7440000-000000283085-1	8	01	0	65000	0	50010	21000	5820	7440000	21.00
ADAMS SILVA & MCNALLY LLP	000000022765986	28,455.50	GAXI-7440000-000000283086-1	9	01	0	65000	0	50010	21000	5820	7440000	21.00
ADAMS SILVA & MCNALLY LLP	000000022765986	28,455.50	GAXI-7440000-000000283087-1	10	01	0	65000	0	50010	21000	5820	7440000	2,310.00
ADAMS SILVA & MCNALLY LLP	000000022765986	28,455.50	GAXI-7440000-000000283088-1	11	01	0	65000	0	50010	21000	5820	7440000	3,982.00
ADAMS SILVA & MCNALLY LLP	000000022765986	28,455.50	GAXI-7440000-000000283089-1	12	01	0	65000	0	50010	21000	5820	7440000	115.50
ADAMS SILVA & MCNALLY LLP	000000022765986	28,455.50	GAXI-7440000-000000283090-1	13	01	0	65000	0	50010	21000	5820	7440000	126.00
ADAMS SILVA & MCNALLY LLP	000000022765986	28,455.50	GAXI-7440000-000000283091-1	14	01	0	65000	0	50010	21000	5820	7440000	115.50
ADAMS SILVA & MCNALLY LLP	000000022765986	28,455.50	GAXI-7440000-000000283092-1	15	01	0	65000	0	50010	21000	5820	7440000	38.50
ADAMS SILVA & MCNALLY LLP	000000022765986	28,455.50	GAXI-7440000-000000283094-1	16	01	0	65000	0	50010	21000	5820	7440000	3,220.00
AD ASTRA EDUCATION, LLC	000000022746724	522.52	GAXI-2160000-000000282656-1	1	01	0	30100	1	11100	10000	4210	2160000	446.85
AD ASTRA EDUCATION, LLC	000000022746724	522.52	GAXI-2160000-000000282656-1	2	01	0	30100	1	11100	10000	4316	2160000	75.67
ALL PHASE ELECTRIC SUPPLY CO	000000022744259	3,243.77	GAXI-7520000-000000282636-1	2	01	0	81500	0	00000	81100	4310	7520000	1,713.19
ALL PHASE ELECTRIC SUPPLY CO	000000022751654	3,781.80	GAXI-7520000-000000282900-1	1	01	0	81500	0	00000	81100	4310	7520000	1,855.96
ALL PHASE ELECTRIC SUPPLY CO	000000022751654	3,781.80	GAXI-7520000-000000282901-1	2	01	0	81500	0	00000	81100	4310	7520000	316.07
ALL PHASE ELECTRIC SUPPLY CO	000000022728869	820.23	GAXI-7520000-000000281933-1	3	01	0	81500	0	00000	81100	4310	7520000	84.71
ALL PHASE ELECTRIC SUPPLY CO	000000022728869	820.23	GAXI-7520000-000000281932-1	2	01	0	81500	0	00000	81100	4310	7520000	109.09
ALL PHASE ELECTRIC SUPPLY CO	000000022728869	820.23	GAXI-7520000-000000281931-1	1	01	0	81500	0	00000	81100	4310	7520000	65.17
ALL PHASE ELECTRIC SUPPLY CO	000000022728869	820.23	GAXI-7520000-000000281934-1	4	01	0	81500	0	00000	81100	4310	7520000	52.21
ALL PHASE ELECTRIC SUPPLY CO	000000022728869	820.23	GAXI-7520000-000000281935-1	5	01	0	81500	0	00000	81100	4310	7520000	54.64
ALL PHASE ELECTRIC SUPPLY CO	000000022728869	820.23	GAXI-7520000-000000281936-1	6	01	0	81500	0	00000	81100	4310	7520000	454.41
ALL PHASE ELECTRIC SUPPLY CO	000000022744259	3,243.77	GAXI-7520000-000000282637-1	3	01	0	81500	0	00000	81100	4310	7520000	479.02
ALL PHASE ELECTRIC SUPPLY CO	000000022744259	3,243.77	GAXI-7520000-000000282635-1	1	01	0	81500	0	00000	81100	4310	7520000	126.37
ALL PHASE ELECTRIC SUPPLY CO	000000022744259	3,243.77	GAXI-7520000-000000282638-1	4	01	0	81500	0	00000	81100	4310	7520000	570.29
ALL PHASE ELECTRIC SUPPLY CO	000000022744259	3,243.77	GAXI-7520000-000000282639-1	5	01	0	81500	0	00000	81100	4310	7520000	172.81
ALL PHASE ELECTRIC SUPPLY CO	000000022744259	3,243.77	GAXI-7520000-000000282640-1	6	01	0	81500	0	00000	81100	4310	7520000	69.38
ALL PHASE ELECTRIC SUPPLY CO	000000022744259	3,243.77	GAXI-7520000-000000282642-1	8	01	0	81500	0	00000	81100	4310	7520000	76.34
ALL PHASE ELECTRIC SUPPLY CO	000000022744259	3,243.77	GAXI-7520000-000000282641-1	7	01	0	81500	0	00000	81100	4310	7520000	36.37
ALL PHASE ELECTRIC SUPPLY CO	000000022751654	3,781.80	GAXI-7520000-000000282902-1	3	01	0	81500	0	00000	81100	4310	7520000	297.19
ALL PHASE ELECTRIC SUPPLY CO	000000022751654	3,781.80	GAXI-7520000-000000282907-1	6	01	0	81500	0	00000	81100	4310	7520000	37.35
ALL PHASE ELECTRIC SUPPLY CO	000000022751654	3,781.80	GAXI-7520000-000000282905-1	5	01	0	81500	0	00000	81100	4310	7520000	65.43
ALL PHASE ELECTRIC SUPPLY CO	000000022751654	3,781.80	GAXI-7520000-000000282903-1	4	01	0	81500	0	00000	81100	4310	7520000	253.21
ALL PHASE ELECTRIC SUPPLY CO	000000022751654	3,781.80	GAXI-7520000-000000282909-1	7	01	0	81500	0	00000	81100	4310	7520000	402.01
ALL PHASE ELECTRIC SUPPLY CO	000000022751654	3,781.80	GAXI-7520000-000000282911-1	8	01	0	81500	0	00000	81100	4310	7520000	117.13
ALL PHASE ELECTRIC SUPPLY CO	000000022751654	3,781.80	GAXI-7520000-000000282914-1	9	01	0	81500	0	00000	81100	4310	7520000	437.45
ALL PHASE ELECTRIC SUPPLY CO	000000022771247	2,238.04	GAXI-7520000-000000283655-1	5	01	0	81500	0	00000	81100	4310	7520000	268.52
ALL PHASE ELECTRIC SUPPLY CO	000000022771247	2,238.04	GAXI-7520000-000000283652-1	2	01	0	81500	0	00000	81100	4310	7520000	113.32
ALL PHASE ELECTRIC SUPPLY CO	000000022771247	2,238.04	GAXI-7520000-000000283651-1	1	01	0	81500	0	00000	81100	4310	7520000	1,064.89
ALL PHASE ELECTRIC SUPPLY CO	000000022771247	2,238.04	GAXI-7520000-000000283653-1	3	01	0	81500	0	00000	81100	4310	7520000	55.74
ALL PHASE ELECTRIC SUPPLY CO	000000022771247	2,238.04	GAXI-7520000-000000283654-1	4	01	0	81500	0	00000	81100	4310	7520000	278.08

Vendor Name	Warrant Number	Warrant Amount	Payment Doc ID	Accounting Line No.	Fund	Sub-Fund	Resource	Project Year	Goal/Categorical	Function/Activity	Object	School Location/Dept	Line Amount
ALL PHASE ELECTRIC SUPPLY CO	000000022771247	2,238.04	GAXI-7520000-000000283656-1	6	01	0	81500	0	00000	81100	4310	7520000	457.49
ALPHA INTERPRETING AGENCY, CORP.	000000022731256	43,370.00	GAXI-7550000-000000281994-1	1	01	0	00000	0	00000	72000	5850	7550000	16,690.00
ALPHA INTERPRETING AGENCY, CORP.	000000022731256	43,370.00	GAXI-7550000-000000281995-1	2	01	0	00000	0	00000	72000	5850	7550000	13,865.00
ALPHA INTERPRETING AGENCY, CORP.	000000022731256	43,370.00	GAXI-7550000-000000281996-1	3	01	0	00000	0	00000	72000	5850	7550000	12,815.00
ALPHA INTERPRETING AGENCY, CORP.	000000022733988	89,525.00	GAXI-7440000-000000282036-1	1	01	0	65000	0	57602	11901	5850	7440000	33,112.50
ALPHA INTERPRETING AGENCY, CORP.	000000022733988	89,525.00	GAXI-7440000-000000282037-1	2	01	0	65000	0	57602	11901	5850	7440000	22,902.50
ALPHA INTERPRETING AGENCY, CORP.	000000022728870	1,150.00	GAXI-7440000-000000281669-1	1	01	0	65000	0	57602	11901	5850	7440000	1,150.00
ALPHA INTERPRETING AGENCY, CORP.	000000022733988	89,525.00	GAXI-7440000-000000282038-1	3	01	0	65000	0	57602	11901	5850	7440000	33,510.00
ALPHA INTERPRETING AGENCY, CORP.	000000022756390	83,897.50	GAXI-7440000-000000283058-1	2	01	0	65000	0	57602	11901	5850	7440000	23,285.00
ALPHA INTERPRETING AGENCY, CORP.	000000022756390	83,897.50	GAXI-7440000-000000283059-1	3	01	0	65000	0	57602	11901	5850	7440000	29,042.50
ALPHA INTERPRETING AGENCY, CORP.	000000022756390	83,897.50	GAXI-7440000-000000283057-1	1	01	0	65000	0	57602	11901	5850	7440000	31,570.00
ALTERNATIVE LOGISTICS TECHNOLOGIES HOLDING, INC	000000022739030	6,940.70	GAXI-7440000-000000282547-1	1	01	0	07240	0	50010	36000	5812	7440000	6,940.70
AMAZON CAPITAL SERVICES	000000022728871	68,038.40	GAXI-7400000-000000281822-1	164	01	0	00000	0	00000	72000	4310	7400000	-4.96
AMAZON CAPITAL SERVICES	000000022761244	23,391.27	GAXI-7460000-000000283423-1	20	01	0	00000	0	17000	10000	4381	7460000	27.38
AMAZON CAPITAL SERVICES	000000022761244	23,391.27	GAXI-2050000-000000283420-1	17	01	0	65000	0	57602	11100	4310	2050000	277.53
AMAZON CAPITAL SERVICES	000000022761244	23,391.27	GAXI-4310000-000000283462-1	34	01	0	65000	0	57602	11107	4310	4310000	113.78
AMAZON CAPITAL SERVICES	000000022728871	68,038.40	GAXI-2060000-000000281832-1	175	01	0	90870	0	11100	10000	4310	2060000	-104.95
AMAZON CAPITAL SERVICES	000000022728871	68,038.40	GAXI-2050000-000000281692-1	53	01	0	90870	0	11100	10000	4310	2050000	215.03
AMAZON CAPITAL SERVICES	000000022728871	68,038.40	GAXI-7530000-000000281699-1	60	01	0	00000	0	00000	72000	4310	7530000	25.98
AMAZON CAPITAL SERVICES	000000022736648	58,306.94	GAXI-2150000-000000282419-1	110	01	0	00000	0	11100	10000	4310	2150000	135.67
AMAZON CAPITAL SERVICES	000000022733989	72,543.79	GAXI-4320000-000000282295-1	213	01	0	00000	0	11100	10000	4310	4320000	77.94
AMAZON CAPITAL SERVICES	000000022733989	72,543.79	GAXI-2160000-000000282240-1	188	01	0	90201	0	11100	10000	4310	2160000	22.09
AMAZON CAPITAL SERVICES	000000022733989	72,543.79	GAXI-2150000-000000282220-1	170	01	0	42010	2	47600	10000	4310	2150000	19.18
AMAZON CAPITAL SERVICES	000000022728871	68,038.40	GAXI-3200000-000000281731-1	92	01	0	00000	0	11100	10000	4310	3200000	17.44
AMAZON CAPITAL SERVICES	000000022728871	68,038.40	GAXI-4310000-000000281716-1	77	01	0	67700	2	11100	10000	4310	4310000	1,883.79
AMAZON CAPITAL SERVICES	000000022728871	68,038.40	GAXI-7490000-000000281709-1	70	13	0	53100	0	00000	37000	4310	7490000	77.84
AMAZON CAPITAL SERVICES	000000022746725	1,766.39	GAXI-2130000-000000282749-1	8	01	0	42030	1	47600	10000	4210	2130000	35.23
AMAZON CAPITAL SERVICES	000000022746725	1,766.39	GAXI-2130000-000000282749-1	9	01	0	42030	1	47600	10000	4310	2130000	43.83
AMAZON CAPITAL SERVICES	000000022733989	72,543.79	GAXI-3220000-000000282166-1	113	01	0	65000	0	57602	11107	4310	3220000	45.29
AMAZON CAPITAL SERVICES	000000022733989	72,543.79	GAXI-2020000-000000282165-1	112	01	0	00000	0	11100	10000	4310	2020000	48.15
AMAZON CAPITAL SERVICES	000000022733989	72,543.79	GAXI-7440000-000000282162-1	109	01	0	65200	0	57602	11100	4310	7440000	251.17
AMAZON CAPITAL SERVICES	000000022728871	68,038.40	GAXI-7460000-000000281915-1	253	01	0	63850	1	38000	10000	4310	7460000	89.64
AMAZON CAPITAL SERVICES	000000022728871	68,038.40	GAXI-2150000-000000281734-1	96	01	0	00000	0	11100	10000	4310	2150000	110.79
AMAZON CAPITAL SERVICES	000000022728871	68,038.40	GAXI-7460000-000000281901-1	240	01	0	90203	0	11100	10000	4310	7460000	338.01
AMAZON CAPITAL SERVICES	000000022736648	58,306.94	GAXI-2140000-000000282357-1	43	01	0	90201	0	11100	10000	4310	2140000	34.84
AMAZON CAPITAL SERVICES	000000022736648	58,306.94	GAXI-3210000-000000282389-1	79	01	0	00000	0	11100	10000	4310	3210000	297.59
AMAZON CAPITAL SERVICES	000000022736648	58,306.94	GAXI-7540000-000000282382-1	70	12	0	90602	0	11100	10000	4310	7540000	29.81
AMAZON CAPITAL SERVICES	000000022736648	58,306.94	GAXI-2150000-000000282380-1	66	01	0	42030	1	47600	10000	4310	2150000	345.00
AMAZON CAPITAL SERVICES	000000022736648	58,306.94	GAXI-2150000-000000282380-1	67	01	0	00000	0	11100	10000	4310	2150000	262.54
AMAZON CAPITAL SERVICES	000000022733989	72,543.79	GAXI-3210000-000000282194-1	142	01	0	00000	0	11100	10000	4310	3210000	414.73
AMAZON CAPITAL SERVICES	000000022736648	58,306.94	GAXI-2150000-000000282415-1	106	01	0	42010	1	47600	10000	4310	2150000	147.41
AMAZON CAPITAL SERVICES	000000022736648	58,306.94	GAXI-4320000-000000282412-1	103	01	0	00000	0	11100	10000	4310	4320000	205.04
AMAZON CAPITAL SERVICES	000000022728871	68,038.40	GAXI-5300000-000000281906-1	245	01	0	00000	0	11100	10000	4310	5300000	31.34
AMAZON CAPITAL SERVICES	000000022728871	68,038.40	GAXI-7440000-000000281838-1	183	01	0	58100	0	57602	11100	4310	7440000	-14.35
AMAZON CAPITAL SERVICES	000000022736648	58,306.94	GAXI-2050000-000000282427-1	121	01	0	00000	0	11100	10000	4310	2050000	71.13
AMAZON CAPITAL SERVICES	000000022733989	72,543.79	GAXI-2160000-000000282080-1	33	01	0	30100	2	11100	10000	4310	2160000	70.67
AMAZON CAPITAL SERVICES	000000022728871	68,038.40	GAXI-7540000-000000281733-1	95	12	0	90602	0	11100	10000	4310	7540000	92.40
AMAZON CAPITAL SERVICES	000000022728871	68,038.40	GAXI-7440000-000000281680-1	44	01	0	65000	0	57601	31409	4310	7440000	32.78
AMAZON CAPITAL SERVICES	000000022736648	58,306.94	GAXI-2050000-000000282439-1	134	01	0	90870	0	11100	10000	4310	2050000	219.90
AMAZON CAPITAL SERVICES	000000022736648	58,306.94	GAXI-7440000-000000282428-1	122	01	0	65000	0	57601	31409	4310	7440000	161.33
AMAZON CAPITAL SERVICES	000000022736648	58,306.94	GAXI-7440000-000000282393-1	82	01	0	65000	0	57602	11901	4310	7440000	376.06
AMAZON CAPITAL SERVICES	000000022736648	58,306.94	GAXI-2140000-000000282384-1	74	01	0	90201	0	11100	10000	4310	2140000	171.83
AMAZON CAPITAL SERVICES	000000022733989	72,543.79	GAXI-2150000-000000282195-1	143	01	0	42010	2	47600	10000	4310	2150000	111.58
AMAZON CAPITAL SERVICES	000000022736648	58,306.94	GAXI-2050000-000000282434-1	129	01	0	90870	0	11100	10000	4310	2050000	65.44
AMAZON CAPITAL SERVICES	000000022728871	68,038.40	GAXI-7440000-000000281667-1	35	01	0	58100	0	57602	11100	4310	7440000	903.32
AMAZON CAPITAL SERVICES	000000022728871	68,038.40	GAXI-2030000-000000281656-1	23	01	0	90201	0	11100	10000	4310	2030000	239.68
AMAZON CAPITAL SERVICES	000000022728871	68,038.40	GAXI-3210000-000000281645-1	9	01	0	00000	0	11100	10000	4310	3210000	548.51
AMAZON CAPITAL SERVICES	000000022728871	68,038.40	GAXI-2020000-000000281638-1	3	01	0	00000	0	11100	10000	4310	2020000	141.02
AMAZON CAPITAL SERVICES	000000022733989	72,543.79	GAXI-7440000-000000282300-1	218	01	0	95640	0	11100	10000	4310	7440000	149.21

Vendor Name	Warrant Number	Warrant Amount	Payment Doc ID	Accounting Line No.	Fund	Sub-Fund	Resource	Project Year	Goal/Categorical	Function/Activity	Object	School Location/Dept	Line Amount
AMAZON CAPITAL SERVICES	000000022733989	72,543.79	GAXI-4320000-000000282299-1	217	01	0	00000	0	11100	10000	4210	4320000	162.24
AMAZON CAPITAL SERVICES	000000022733989	72,543.79	GAXI-2100000-000000282262-1	201	01	0	90870	0	11100	10000	4310	2100000	534.69
AMAZON CAPITAL SERVICES	000000022733989	72,543.79	GAXI-4310000-000000282221-1	171	01	0	67700	2	17001	10000	4310	4310000	3,587.26
AMAZON CAPITAL SERVICES	000000022736648	58,306.94	GAXI-7440000-000000282482-1	173	01	0	58100	0	57602	11100	4310	7440000	79.45
AMAZON CAPITAL SERVICES	000000022728871	68,038.40	GAXI-2150000-000000281826-1	169	01	0	00000	0	11100	10000	4310	2150000	-43.52
AMAZON CAPITAL SERVICES	000000022733989	72,543.79	GAXI-7730000-000000282200-1	147	01	0	00000	0	00000	77000	4310	7730000	190.19
AMAZON CAPITAL SERVICES	000000022733989	72,543.79	GAXI-2100000-000000282189-1	137	01	0	90870	0	11100	10000	4310	2100000	65.86
AMAZON CAPITAL SERVICES	000000022728871	68,038.40	GAXI-7460000-000000281913-1	252	01	0	90203	0	11100	10000	4310	7460000	902.29
AMAZON CAPITAL SERVICES	000000022733989	72,543.79	GAXI-4310000-000000282219-1	169	01	0	00000	0	11100	10000	4310	4310000	188.88
AMAZON CAPITAL SERVICES	000000022733989	72,543.79	GAXI-3200000-000000282215-1	162	01	0	00000	0	11100	10000	4310	3200000	347.10
AMAZON CAPITAL SERVICES	000000022733989	72,543.79	GAXI-2160000-000000282198-1	146	01	0	30100	2	11100	10000	4310	2160000	49.35
AMAZON CAPITAL SERVICES	000000022733989	72,543.79	GAXI-2150000-000000282190-1	138	01	0	90201	0	11100	10000	4310	2150000	73.44
AMAZON CAPITAL SERVICES	000000022733989	72,543.79	GAXI-7490000-000000282177-1	126	13	0	53100	0	00000	37000	4410	7490000	1,802.30
AMAZON CAPITAL SERVICES	000000022736648	58,306.94	GAXI-7520000-000000282385-1	75	01	0	81500	0	00000	81100	4310	7520000	1,036.87
AMAZON CAPITAL SERVICES	000000022736648	58,306.94	GAXI-2150000-000000282383-1	71	01	0	42010	1	47600	10000	4310	2150000	44.91
AMAZON CAPITAL SERVICES	000000022736648	58,306.94	GAXI-2150000-000000282383-1	72	01	0	42030	1	47600	10000	4310	2150000	97.52
AMAZON CAPITAL SERVICES	000000022736648	58,306.94	GAXI-2150000-000000282383-1	73	01	0	42010	2	47600	10000	4310	2150000	202.52
AMAZON CAPITAL SERVICES	000000022728871	68,038.40	GAXI-7460000-000000281824-1	166	01	0	90202	0	11100	10000	4310	7460000	-64.23
AMAZON CAPITAL SERVICES	000000022728871	68,038.40	GAXI-7460000-000000281824-1	167	01	0	90202	0	11100	10000	4410	7460000	-40.57
AMAZON CAPITAL SERVICES	000000022736648	58,306.94	GAXI-2020000-000000282455-1	152	01	0	00000	0	11100	10000	4310	2020000	48.20
AMAZON CAPITAL SERVICES	000000022736648	58,306.94	GAXI-2090000-000000282446-1	140	01	0	30100	0	11100	10000	4310	2090000	301.69
AMAZON CAPITAL SERVICES	000000022736648	58,306.94	GAXI-7470000-000000282443-1	137	01	0	00000	0	00000	72000	4310	7470000	187.89
AMAZON CAPITAL SERVICES	000000022736648	58,306.94	GAXI-2060000-000000282424-1	115	01	0	42030	2	47600	10000	4310	2060000	178.74
AMAZON CAPITAL SERVICES	000000022736648	58,306.94	GAXI-2160000-000000282422-1	113	01	0	90201	0	11100	10000	4310	2160000	10.92
AMAZON CAPITAL SERVICES	000000022761244	23,391.27	GAXI-2150000-000000283431-1	26	01	0	00000	0	11100	10000	4310	2150000	112.47
AMAZON CAPITAL SERVICES	000000022728871	68,038.40	GAXI-2130000-000000281804-1	147	01	0	90810	0	11100	10000	4310	2130000	-197.70
AMAZON CAPITAL SERVICES	000000022728871	68,038.40	GAXI-7460000-000000281801-1	144	01	0	90202	0	11100	10000	4310	7460000	-93.16
AMAZON CAPITAL SERVICES	000000022733989	72,543.79	GAXI-2050000-000000282079-1	32	01	0	90870	0	11100	10000	4310	2050000	86.85
AMAZON CAPITAL SERVICES	000000022728871	68,038.40	GAXI-4310000-000000281799-1	142	01	0	00000	0	11100	10000	4310	4310000	-26.16
AMAZON CAPITAL SERVICES	000000022728871	68,038.40	GAXI-7460000-000000281896-1	233	01	0	90202	0	11100	10000	4310	7460000	980.38
AMAZON CAPITAL SERVICES	000000022728871	68,038.40	GAXI-7460000-000000281896-1	234	01	0	90202	0	11100	10000	4410	7460000	619.17
AMAZON CAPITAL SERVICES	000000022733989	72,543.79	GAXI-5300000-000000282059-1	12	01	0	00000	0	11100	10000	4310	5300000	149.02
AMAZON CAPITAL SERVICES	000000022728871	68,038.40	GAXI-2150000-000000281738-1	100	01	0	90704	0	11100	10000	4310	2150000	430.95
AMAZON CAPITAL SERVICES	000000022761244	23,391.27	GAXI-2050000-000000283418-1	15	01	0	90870	0	11100	10000	4310	2050000	194.94
AMAZON CAPITAL SERVICES	000000022728871	68,038.40	GAXI-7910000-000000281879-1	214	01	0	06350	0	38000	10000	4310	7910000	1,314.95
AMAZON CAPITAL SERVICES	000000022733989	72,543.79	GAXI-4310000-000000282152-1	101	01	0	00000	0	13400	10000	4310	4310000	523.98
AMAZON CAPITAL SERVICES	000000022733989	72,543.79	GAXI-2050000-000000282081-1	34	01	0	90870	0	11100	10000	4310	2050000	68.65
AMAZON CAPITAL SERVICES	000000022728871	68,038.40	GAXI-7460000-000000281883-1	219	01	0	90203	0	11100	10000	4310	7460000	113.63
AMAZON CAPITAL SERVICES	000000022761244	23,391.27	GAXI-5330000-000000283447-1	30	01	0	65000	0	57602	11100	4310	5330000	267.63
AMAZON CAPITAL SERVICES	000000022728871	68,038.40	GAXI-7520000-000000281686-1	47	01	0	81500	0	00000	81100	4310	7520000	219.32
AMAZON CAPITAL SERVICES	000000022728871	68,038.40	GAXI-2160000-000000281685-1	46	01	0	30100	2	11100	10000	4310	2160000	50.40
AMAZON CAPITAL SERVICES	000000022728871	68,038.40	GAXI-2060000-000000281662-1	29	01	0	90870	0	11100	10000	4310	2060000	871.26
AMAZON CAPITAL SERVICES	000000022728871	68,038.40	GAXI-7460000-000000281784-1	123	01	0	90202	0	11100	10000	4310	7460000	151.16
AMAZON CAPITAL SERVICES	000000022728871	68,038.40	GAXI-7440000-000000281745-1	105	01	0	65000	0	57601	31420	4310	7440000	30.44
AMAZON CAPITAL SERVICES	000000022728871	68,038.40	GAXI-4310000-000000281655-1	22	01	0	67700	2	11100	10000	4310	4310000	1,479.00
AMAZON CAPITAL SERVICES	000000022728871	68,038.40	GAXI-4320000-000000281644-1	8	01	0	00000	0	11100	10000	4310	4320000	518.77
AMAZON CAPITAL SERVICES	000000022761244	23,391.27	GAXI-2150000-000000283404-1	4	01	0	90201	0	11100	10000	4310	2150000	1,868.40
AMAZON CAPITAL SERVICES	000000022733989	72,543.79	GAXI-7520000-000000282298-1	216	01	0	81500	0	00000	81100	4310	7520000	41.21
AMAZON CAPITAL SERVICES	000000022728871	68,038.40	GAXI-7540000-000000281816-1	158	12	0	90602	0	11100	10000	4310	7540000	-55.29
AMAZON CAPITAL SERVICES	000000022733989	72,543.79	GAXI-7440000-000000282050-1	3	01	0	65200	0	57602	11106	4310	7440000	20.11
AMAZON CAPITAL SERVICES	000000022733989	72,543.79	GAXI-7440000-000000282209-1	157	01	0	65200	0	57602	11100	4310	7440000	752.02
AMAZON CAPITAL SERVICES	000000022733989	72,543.79	GAXI-5330000-000000282174-1	123	11	0	63910	0	41104	10000	4310	5330000	596.69
AMAZON CAPITAL SERVICES	000000022728871	68,038.40	GAXI-3220000-000000281830-1	173	01	0	90704	0	11100	10000	4310	3220000	-10.31
AMAZON CAPITAL SERVICES	000000022733989	72,543.79	GAXI-7440000-000000282051-1	4	01	0	65200	0	57602	11106	4310	7440000	15.45
AMAZON CAPITAL SERVICES	000000022733989	72,543.79	GAXI-2150000-000000282160-1	107	01	0	90201	0	11100	10000	4310	2150000	94.98
AMAZON CAPITAL SERVICES	000000022733989	72,543.79	GAXI-2020000-000000282144-1	99	01	0	90870	0	11100	10000	4310	2020000	842.57
AMAZON CAPITAL SERVICES	000000022733989	72,543.79	GAXI-2140000-000000282137-1	92	01	0	90704	0	11100	10000	4310	2140000	339.31
AMAZON CAPITAL SERVICES	000000022749197	2,452.54	GAXI-4320000-000000282833-1	1	01	0	00000	0	17004	10000	4410	4320000	701.68
AMAZON CAPITAL SERVICES	000000022733989	72,543.79	GAXI-4320000-000000282193-1	141	01	0	65000	0	57602	11100	4310	4320000	66.64

Vendor Name	Warrant Number	Warrant Amount	Payment Doc ID	Accounting Line No.	Fund	Sub-Fund	Resource	Project Year	Goal/Categorical	Function/Activity	Object	School Location/Dept	Line Amount
AMAZON CAPITAL SERVICES	000000022733989	72,543.79	GAXI-2140000-000000282180-1	128	01	0	00000	0	11100	10000	4310	2140000	274.90
AMAZON CAPITAL SERVICES	000000022736648	58,306.94	GAXI-4310000-000000282359-1	45	01	0	00000	0	17001	10000	4310	4310000	434.17
AMAZON CAPITAL SERVICES	000000022733989	72,543.79	GAXI-5300000-000000282129-1	84	01	0	00000	0	11100	10000	4310	5300000	45.01
AMAZON CAPITAL SERVICES	000000022761244	23,391.27	GAXI-2150000-000000283413-1	12	01	0	90201	0	11100	10000	4310	2150000	2,414.88
AMAZON CAPITAL SERVICES	000000022728871	68,038.40	GAXI-5330000-000000281717-1	78	11	0	63910	0	41104	10000	4310	5330000	85.95
AMAZON CAPITAL SERVICES	000000022733989	72,543.79	GAXI-2030000-000000282196-1	144	01	0	00000	0	11100	10000	4310	2030000	44.18
AMAZON CAPITAL SERVICES	000000022733989	72,543.79	GAXI-7470000-000000282100-1	56	01	0	00000	0	00000	72000	4410	7470000	41.96
AMAZON CAPITAL SERVICES	000000022733989	72,543.79	GAXI-7440000-000000282095-1	51	01	0	58100	0	57602	11100	4310	7440000	584.94
AMAZON CAPITAL SERVICES	000000022736648	58,306.94	GAXI-4320000-000000282449-1	143	01	0	65000	0	57602	11107	4310	4320000	288.00
AMAZON CAPITAL SERVICES	000000022733989	72,543.79	GAXI-2160000-000000282094-1	50	01	0	90703	0	11100	10000	4310	2160000	61.57
AMAZON CAPITAL SERVICES	000000022733989	72,543.79	GAXI-7440000-000000282070-1	23	01	0	95640	0	11100	10000	4310	7440000	391.69
AMAZON CAPITAL SERVICES	000000022736648	58,306.94	GAXI-2130000-000000282441-1	136	01	0	65000	0	57602	11100	4310	2130000	411.30
AMAZON CAPITAL SERVICES	000000022736648	58,306.94	GAXI-7540000-000000282457-1	154	12	0	61051	1	11100	10000	4310	7540000	1,515.90
AMAZON CAPITAL SERVICES	000000022728871	68,038.40	GAXI-7460000-000000281887-1	223	01	0	90203	0	11100	10000	4310	7460000	113.63
AMAZON CAPITAL SERVICES	000000022728871	68,038.40	GAXI-5080000-000000281704-1	65	01	0	65000	0	57300	11100	4310	5080000	116.36
AMAZON CAPITAL SERVICES	000000022728871	68,038.40	GAXI-3210000-000000281701-1	62	01	0	00000	0	11100	10000	4310	3210000	36.45
AMAZON CAPITAL SERVICES	000000022728871	68,038.40	GAXI-2050000-000000281700-1	61	01	0	90870	0	11100	10000	4310	2050000	215.72
AMAZON CAPITAL SERVICES	000000022728871	68,038.40	GAXI-7550000-000000281698-1	59	01	0	00000	0	00000	72000	4310	7550000	215.73
AMAZON CAPITAL SERVICES	000000022728871	68,038.40	GAXI-2050000-000000281814-1	156	01	0	90870	0	11100	10000	4310	2050000	-55.24
AMAZON CAPITAL SERVICES	000000022733989	72,543.79	GAXI-2100000-000000282208-1	155	01	0	00000	0	11100	10000	4310	2100000	52.35
AMAZON CAPITAL SERVICES	000000022733989	72,543.79	GAXI-2100000-000000282208-1	156	01	0	90870	0	11100	10000	4310	2100000	5.73
AMAZON CAPITAL SERVICES	000000022733989	72,543.79	GAXI-2020000-000000282182-1	130	01	0	90870	0	11100	10000	4310	2020000	219.24
AMAZON CAPITAL SERVICES	000000022736648	58,306.94	GAXI-2150000-000000282330-1	21	01	0	42010	1	47600	10000	4310	2150000	22.58
AMAZON CAPITAL SERVICES	000000022736648	58,306.94	GAXI-2150000-000000282330-1	22	01	0	42010	2	47600	10000	4310	2150000	116.47
AMAZON CAPITAL SERVICES	000000022728871	68,038.40	GAXI-2160000-000000281673-1	40	01	0	90201	0	11100	10000	4310	2160000	429.10
AMAZON CAPITAL SERVICES	000000022728871	68,038.40	GAXI-5330000-000000281660-1	27	11	0	63910	0	41104	10000	4310	5330000	78.90
AMAZON CAPITAL SERVICES	000000022728871	68,038.40	GAXI-2150000-000000281806-1	149	01	0	90201	0	11100	10000	4310	2150000	-132.39
AMAZON CAPITAL SERVICES	000000022761244	23,391.27	GAXI-2150000-000000283425-1	22	01	0	90870	0	11100	10000	4310	2150000	462.35
AMAZON CAPITAL SERVICES	000000022733989	72,543.79	GAXI-3200000-000000282278-1	211	01	0	67700	1	11100	10000	4310	3200000	406.40
AMAZON CAPITAL SERVICES	000000022733989	72,543.79	GAXI-7540000-000000282230-1	179	12	0	90602	0	11100	10000	4310	7540000	74.82
AMAZON CAPITAL SERVICES	000000022736648	58,306.94	GAXI-7440000-000000282435-1	130	01	0	65000	0	57602	11901	4310	7440000	352.55
AMAZON CAPITAL SERVICES	000000022736648	58,306.94	GAXI-5080000-000000282429-1	123	01	0	65000	0	57300	11100	4310	5080000	13.14
AMAZON CAPITAL SERVICES	000000022761244	23,391.27	GAXI-2050000-000000283414-1	13	01	0	90870	0	11100	10000	4310	2050000	63.17
AMAZON CAPITAL SERVICES	000000022736648	58,306.94	GAXI-2060000-000000282456-1	153	01	0	00000	0	11100	10000	4310	2060000	88.42
AMAZON CAPITAL SERVICES	000000022736648	58,306.94	GAXI-2150000-000000282451-1	145	01	0	42030	1	47600	10000	4310	2150000	175.90
AMAZON CAPITAL SERVICES	000000022736648	58,306.94	GAXI-2150000-000000282451-1	146	01	0	00000	0	11100	10000	4310	2150000	133.86
AMAZON CAPITAL SERVICES	000000022736648	58,306.94	GAXI-2150000-000000282447-1	141	01	0	90201	0	11100	10000	4310	2150000	1,512.09
AMAZON CAPITAL SERVICES	000000022736648	58,306.94	GAXI-7730000-000000282320-1	11	01	0	00000	0	00000	77000	4310	7730000	516.13
AMAZON CAPITAL SERVICES	000000022728871	68,038.40	GAXI-7460000-000000281909-1	248	01	0	90203	0	11100	10000	4310	7460000	78.53
AMAZON CAPITAL SERVICES	000000022733989	72,543.79	GAXI-5300000-000000282060-1	13	01	0	00000	0	11100	10000	4310	5300000	315.92
AMAZON CAPITAL SERVICES	000000022728871	68,038.40	GAXI-2150000-000000281737-1	99	01	0	00000	0	11100	10000	4310	2150000	147.22
AMAZON CAPITAL SERVICES	000000022728871	68,038.40	GAXI-2130000-000000281819-1	161	01	0	00000	0	11100	10000	4310	2130000	-97.22
AMAZON CAPITAL SERVICES	000000022728871	68,038.40	GAXI-7460000-000000281899-1	237	01	0	63850	1	38000	10000	4310	7460000	17.83
AMAZON CAPITAL SERVICES	000000022728871	68,038.40	GAXI-7460000-000000281890-1	226	01	0	90203	0	11100	10000	4310	7460000	185.64
AMAZON CAPITAL SERVICES	000000022761244	23,391.27	GAXI-2150000-000000283464-1	36	01	0	00000	0	11100	10000	4310	2150000	267.81
AMAZON CAPITAL SERVICES	000000022728871	68,038.40	GAXI-7460000-000000281880-1	215	01	0	90203	0	11100	10000	4310	7460000	117.54
AMAZON CAPITAL SERVICES	000000022728871	68,038.40	GAXI-2160000-000000281694-1	55	01	0	90201	0	11100	10000	4310	2160000	107.31
AMAZON CAPITAL SERVICES	000000022728871	68,038.40	GAXI-5170000-000000281690-1	51	01	0	65000	0	57601	11100	4310	5170000	148.43
AMAZON CAPITAL SERVICES	000000022728871	68,038.40	GAXI-2030000-000000281689-1	50	01	0	00000	0	11100	10000	4310	2030000	81.90
AMAZON CAPITAL SERVICES	000000022728871	68,038.40	GAXI-7440000-000000281729-1	90	01	0	65200	0	57602	11100	4310	7440000	38.62
AMAZON CAPITAL SERVICES	000000022728871	68,038.40	GAXI-2060000-000000281726-1	87	01	0	90870	0	11100	10000	4310	2060000	671.33
AMAZON CAPITAL SERVICES	000000022728871	68,038.40	GAXI-7460000-000000281843-1	190	01	0	90202	0	11100	10000	4310	7460000	204.41
AMAZON CAPITAL SERVICES	000000022728871	68,038.40	GAXI-7460000-000000281863-1	198	01	0	90202	0	11100	10000	4310	7460000	2,973.69
AMAZON CAPITAL SERVICES	000000022728871	68,038.40	GAXI-7440000-000000281668-1	36	01	0	65000	0	57601	31420	4310	7440000	143.50
AMAZON CAPITAL SERVICES	000000022728871	68,038.40	GAXI-2130000-000000281647-1	11	01	0	00000	0	11100	10000	4310	2130000	284.42
AMAZON CAPITAL SERVICES	000000022733989	72,543.79	GAXI-2050000-000000282170-1	118	01	0	90704	0	11100	10000	4310	2050000	120.27
AMAZON CAPITAL SERVICES	000000022733989	72,543.79	GAXI-2160000-000000282161-1	108	01	0	30100	2	11100	10000	4310	2160000	23.18
AMAZON CAPITAL SERVICES	000000022728871	68,038.40	GAXI-5330000-000000281721-1	82	11	0	63910	0	41102	10000	4310	5330000	153.96
AMAZON CAPITAL SERVICES	000000022728871	68,038.40	GAXI-2150000-000000281715-1	76	01	0	90870	0	11100	10000	4310	2150000	303.61

Vendor Name	Warrant Number	Warrant Amount	Payment Doc ID	Accounting Line No.	Fund	Sub-Fund	Resource	Project Year	Goal/Categorical	Function/Activity	Object	School Location/Dept	Line Amount
AMAZON CAPITAL SERVICES	000000022728871	68,038.40	GAXI-7460000-000000281884-1	220	01	0	90202	0	11100	10000	4310	7460000	2,023.83
AMAZON CAPITAL SERVICES	000000022728871	68,038.40	GAXI-2160000-000000281722-1	83	01	0	30100	2	11100	10000	4310	2160000	1,284.55
AMAZON CAPITAL SERVICES	000000022728871	68,038.40	GAXI-3200000-000000281649-1	16	01	0	67700	1	11100	10000	4310	3200000	13.64
AMAZON CAPITAL SERVICES	000000022728871	68,038.40	GAXI-2050000-000000281646-1	10	01	0	00000	0	11100	10000	4310	2050000	12.14
AMAZON CAPITAL SERVICES	000000022728871	68,038.40	GAXI-3200000-000000281640-1	4	01	0	00000	0	11100	10000	4310	3200000	105.37
AMAZON CAPITAL SERVICES	000000022761244	23,391.27	GAXI-3220000-000000283411-1	10	01	0	67700	3	17001	10000	4310	3220000	1,084.66
AMAZON CAPITAL SERVICES	000000022728871	68,038.40	GAXI-2160000-000000281815-1	157	01	0	90201	0	11100	10000	4310	2160000	-17.67
AMAZON CAPITAL SERVICES	000000022728871	68,038.40	GAXI-7520000-000000281818-1	160	01	0	81500	0	00000	81100	4310	7520000	-375.69
AMAZON CAPITAL SERVICES	000000022728871	68,038.40	GAXI-2050000-000000281693-1	54	01	0	90870	0	11100	10000	4310	2050000	68.18
AMAZON CAPITAL SERVICES	000000022733989	72,543.79	GAXI-2050000-000000282169-1	117	01	0	90704	0	11100	10000	4310	2050000	117.73
AMAZON CAPITAL SERVICES	000000022733989	72,543.79	GAXI-7490000-000000282135-1	90	13	0	53100	0	00000	37000	4410	7490000	1,802.30
AMAZON CAPITAL SERVICES	000000022728871	68,038.40	GAXI-2050000-000000281670-1	37	01	0	90870	0	11100	10000	4310	2050000	7.08
AMAZON CAPITAL SERVICES	000000022728871	68,038.40	GAXI-2050000-000000281812-1	154	01	0	90870	0	11100	10000	4310	2050000	-69.26
AMAZON CAPITAL SERVICES	000000022736648	58,306.94	GAXI-7520000-000000282462-1	161	01	0	81500	0	00000	81100	4310	7520000	127.26
AMAZON CAPITAL SERVICES	000000022736648	58,306.94	GAXI-4310000-000000282433-1	128	01	0	00000	0	11100	10000	4310	4310000	760.43
AMAZON CAPITAL SERVICES	000000022736648	58,306.94	GAXI-3220000-000000282360-1	46	01	0	30100	2	11100	10000	4310	3220000	574.00
AMAZON CAPITAL SERVICES	000000022736648	58,306.94	GAXI-2020000-000000282358-1	44	01	0	00000	0	11100	10000	4310	2020000	1,159.15
AMAZON CAPITAL SERVICES	000000022728871	68,038.40	GAXI-7440000-000000281775-1	114	01	0	95640	0	57602	11100	4310	7440000	515.26
AMAZON CAPITAL SERVICES	000000022728871	68,038.40	GAXI-2150000-000000281823-1	165	01	0	00000	0	11100	10000	4310	2150000	-10.94
AMAZON CAPITAL SERVICES	000000022728871	68,038.40	GAXI-7460000-000000281870-1	205	01	0	90203	0	11100	10000	4310	7460000	130.69
AMAZON CAPITAL SERVICES	000000022733989	72,543.79	GAXI-2030000-000000282296-1	214	01	0	65000	0	57602	11100	4310	2030000	422.51
AMAZON CAPITAL SERVICES	000000022746725	1,766.39	GAXI-2150000-000000282751-1	11	01	0	90870	0	11100	10000	4310	2150000	97.39
AMAZON CAPITAL SERVICES	000000022728871	68,038.40	GAXI-2130000-000000281713-1	74	01	0	67700	3	11100	10000	4310	2130000	281.12
AMAZON CAPITAL SERVICES	000000022728871	68,038.40	GAXI-7460000-000000281789-1	129	01	0	90202	0	11100	10000	4310	7460000	966.61
AMAZON CAPITAL SERVICES	000000022733989	72,543.79	GAXI-2160000-000000282203-1	150	01	0	90201	0	11100	10000	4310	2160000	157.05
AMAZON CAPITAL SERVICES	000000022733989	72,543.79	GAXI-2100000-000000282173-1	121	01	0	90201	0	11100	10000	4393	2100000	107.60
AMAZON CAPITAL SERVICES	000000022733989	72,543.79	GAXI-2100000-000000282173-1	122	01	0	90870	0	11100	10000	4393	2100000	446.16
AMAZON CAPITAL SERVICES	000000022728871	68,038.40	GAXI-2010000-000000281786-1	126	01	0	65000	0	57602	11107	4310	2010000	38.64
AMAZON CAPITAL SERVICES	000000022761244	23,391.27	GAXI-2010000-000000283406-1	6	01	0	30100	2	11100	10000	4310	2010000	75.38
AMAZON CAPITAL SERVICES	000000022728871	68,038.40	GAXI-7460000-000000281868-1	203	01	0	90202	0	11100	10000	4310	7460000	540.74
AMAZON CAPITAL SERVICES	000000022728871	68,038.40	GAXI-7540000-000000281821-1	163	12	0	90602	0	11100	10000	4310	7540000	-19.98
AMAZON CAPITAL SERVICES	000000022728871	68,038.40	GAXI-7440000-000000281742-1	103	01	0	65000	0	57601	31420	4310	7440000	24.19
AMAZON CAPITAL SERVICES	000000022728871	68,038.40	GAXI-3220000-000000281829-1	172	01	0	00000	0	11100	10000	4310	3220000	-31.78
AMAZON CAPITAL SERVICES	000000022728871	68,038.40	GAXI-7460000-000000281876-1	211	01	0	90203	0	11100	10000	4310	7460000	85.72
AMAZON CAPITAL SERVICES	000000022736648	58,306.94	GAXI-7440000-000000282431-1	126	01	0	95640	0	11100	10000	4310	7440000	993.14
AMAZON CAPITAL SERVICES	000000022736648	58,306.94	GAXI-5330000-000000282425-1	116	11	0	63910	0	41101	27000	4310	5330000	32.19
AMAZON CAPITAL SERVICES	000000022736648	58,306.94	GAXI-5330000-000000282425-1	117	11	0	63910	0	41102	27000	4310	5330000	321.93
AMAZON CAPITAL SERVICES	000000022736648	58,306.94	GAXI-5330000-000000282425-1	118	11	0	63910	0	41104	27000	4310	5330000	225.35
AMAZON CAPITAL SERVICES	000000022736648	58,306.94	GAXI-5330000-000000282425-1	119	11	0	63910	0	41106	27000	4310	5330000	64.39
AMAZON CAPITAL SERVICES	000000022736648	58,306.94	GAXI-7440000-000000282349-1	35	01	0	95640	0	11100	10000	4310	7440000	132.50
AMAZON CAPITAL SERVICES	000000022761244	23,391.27	GAXI-3220000-000000283441-1	29	01	0	00000	0	11100	10000	4310	3220000	24.82
AMAZON CAPITAL SERVICES	000000022736648	58,306.94	GAXI-2160000-000000282377-1	63	01	0	65000	0	57602	11100	4310	2160000	97.21
AMAZON CAPITAL SERVICES	000000022736648	58,306.94	GAXI-2160000-000000282369-1	56	01	0	30100	1	11100	10000	4210	2160000	330.95
AMAZON CAPITAL SERVICES	000000022761244	23,391.27	GAXI-2050000-000000283415-1	14	01	0	90870	0	11100	10000	4310	2050000	86.39
AMAZON CAPITAL SERVICES	000000022728871	68,038.40	GAXI-2050000-000000281736-1	98	01	0	90870	0	11100	10000	4310	2050000	173.54
AMAZON CAPITAL SERVICES	000000022728871	68,038.40	GAXI-4310000-000000281728-1	89	01	0	00000	0	11100	10000	4310	4310000	557.88
AMAZON CAPITAL SERVICES	000000022728871	68,038.40	GAXI-3200000-000000281708-1	69	01	0	30100	2	11100	10000	4310	3200000	202.31
AMAZON CAPITAL SERVICES	000000022736648	58,306.94	GAXI-2090000-000000282355-1	41	01	0	42030	1	47600	10000	4310	2090000	716.07
AMAZON CAPITAL SERVICES	000000022736648	58,306.94	GAXI-2030000-000000282334-1	25	01	0	90870	0	11100	10000	4310	2030000	638.64
AMAZON CAPITAL SERVICES	000000022733989	72,543.79	GAXI-7490000-000000282096-1	52	13	0	53100	0	00000	37000	4310	7490000	77.53
AMAZON CAPITAL SERVICES	000000022733989	72,543.79	GAXI-5330000-000000282077-1	30	11	0	63910	0	41104	10000	4310	5330000	1,033.68
AMAZON CAPITAL SERVICES	000000022736648	58,306.94	GAXI-2150000-000000282423-1	114	01	0	42010	1	47600	10000	4310	2150000	275.41
AMAZON CAPITAL SERVICES	000000022733989	72,543.79	GAXI-7440000-000000282097-1	53	01	0	65000	0	57602	11907	4310	7440000	1,060.40
AMAZON CAPITAL SERVICES	000000022733989	72,543.79	GAXI-4310000-000000282078-1	31	01	0	00000	0	11100	10000	4310	4310000	176.25
AMAZON CAPITAL SERVICES	000000022728871	68,038.40	GAXI-7470000-000000281706-1	67	01	0	00000	0	00000	72000	4310	7470000	226.99
AMAZON CAPITAL SERVICES	000000022728871	68,038.40	GAXI-5080000-000000281651-1	18	01	0	65000	0	57300	11100	4310	5080000	220.23
AMAZON CAPITAL SERVICES	000000022728871	68,038.40	GAXI-2010000-000000281643-1	7	01	0	90201	0	00000	24200	4310	2010000	7.33
AMAZON CAPITAL SERVICES	000000022736648	58,306.94	GAXI-2100000-000000282453-1	150	01	0	42010	1	47600	10000	4310	2100000	655.49
AMAZON CAPITAL SERVICES	000000022728871	68,038.40	GAXI-2050000-000000281641-1	5	01	0	90870	0	11100	10000	4310	2050000	333.57

Vendor Name	Warrant Number	Warrant Amount	Payment Doc ID	Accounting Line No.	Fund	Sub-Fund	Resource	Project Year	Goal/Categorical	Function/Activity	Object	School Location/Dept	Line Amount
AMAZON CAPITAL SERVICES	000000022733989	72,543.79	GAXI-2090000-000000282301-1	219	01	0	65000	0	57602	11100	4310	2090000	40.49
AMAZON CAPITAL SERVICES	000000022733989	72,543.79	GAXI-2090000-000000282301-1	220	01	0	65000	0	57602	11100	4210	2090000	7.16
AMAZON CAPITAL SERVICES	000000022733989	72,543.79	GAXI-7440000-000000282307-1	227	01	0	65200	0	57602	11100	4310	7440000	11.04
AMAZON CAPITAL SERVICES	000000022733989	72,543.79	GAXI-2090000-000000282245-1	197	01	0	00000	0	11100	10000	4310	2090000	54.09
AMAZON CAPITAL SERVICES	000000022736648	58,306.94	GAXI-4320000-000000282238-1	6	01	0	90820	0	00000	24200	4310	4320000	575.15
AMAZON CAPITAL SERVICES	000000022736648	58,306.94	GAXI-7540000-000000282378-1	64	12	0	90602	0	11100	10000	4310	7540000	142.36
AMAZON CAPITAL SERVICES	000000022736648	58,306.94	GAXI-3200000-000000282351-1	37	01	0	00000	0	18006	10000	4410	3200000	1,267.41
AMAZON CAPITAL SERVICES	000000022736648	58,306.94	GAXI-2090000-000000282339-1	30	01	0	65000	0	57602	11100	4310	2090000	767.04
AMAZON CAPITAL SERVICES	000000022736648	58,306.94	GAXI-2090000-000000282339-1	31	01	0	65000	0	57602	11100	4210	2090000	135.66
AMAZON CAPITAL SERVICES	000000022733989	72,543.79	GAXI-3220000-000000282297-1	215	01	0	65000	0	57602	11107	4310	3220000	101.88
AMAZON CAPITAL SERVICES	000000022733989	72,543.79	GAXI-7550000-000000282275-1	208	01	0	00000	0	00000	72000	4310	7550000	54.26
AMAZON CAPITAL SERVICES	000000022733989	72,543.79	GAXI-2060000-000000282231-1	180	01	0	65000	0	57602	11107	4310	2060000	7.72
AMAZON CAPITAL SERVICES	000000022733989	72,543.79	GAXI-5300000-000000282064-1	17	01	0	00000	0	11100	10000	4310	5300000	23.48
AMAZON CAPITAL SERVICES	000000022733989	72,543.79	GAXI-2010000-000000282308-1	228	01	0	90201	0	00000	24200	4310	2010000	23.67
AMAZON CAPITAL SERVICES	000000022733989	72,543.79	GAXI-4310000-000000282276-1	209	01	0	00000	0	11100	10000	4310	4310000	301.06
AMAZON CAPITAL SERVICES	000000022733989	72,543.79	GAXI-7420000-000000282228-1	177	01	0	00000	0	00000	72000	4310	7420000	24.22
AMAZON CAPITAL SERVICES	000000022733989	72,543.79	GAXI-5080000-000000282227-1	176	01	0	65000	0	57300	11100	4310	5080000	413.43
AMAZON CAPITAL SERVICES	000000022733989	72,543.79	GAXI-5330000-000000282222-1	172	11	0	63910	0	41102	10000	4310	5330000	16.34
AMAZON CAPITAL SERVICES	000000022736648	58,306.94	GAXI-3200000-000000282155-1	3	01	0	67700	2	17007	10000	4410	3200000	3,135.99
AMAZON CAPITAL SERVICES	000000022733989	72,543.79	GAXI-7490000-000000282131-1	86	13	0	53100	0	00000	37000	4310	7490000	931.34
AMAZON CAPITAL SERVICES	000000022733989	72,543.79	GAXI-2010000-000000282109-1	65	01	0	30100	2	11100	10000	4310	2010000	694.06
AMAZON CAPITAL SERVICES	000000022736648	58,306.94	GAXI-4310000-000000282466-1	164	01	0	00000	0	13800	10000	4310	4310000	99.45
AMAZON CAPITAL SERVICES	000000022728871	68,038.40	GAXI-7520000-000000281740-1	101	01	0	81500	0	00000	81100	4310	7520000	396.80
AMAZON CAPITAL SERVICES	000000022736648	58,306.94	GAXI-2150000-000000282461-1	158	01	0	42010	1	47600	10000	4310	2150000	3.48
AMAZON CAPITAL SERVICES	000000022736648	58,306.94	GAXI-2150000-000000282461-1	159	01	0	42030	1	47600	10000	4310	2150000	7.56
AMAZON CAPITAL SERVICES	000000022736648	58,306.94	GAXI-2150000-000000282461-1	160	01	0	42010	2	47600	10000	4310	2150000	15.69
AMAZON CAPITAL SERVICES	000000022736648	58,306.94	GAXI-2100000-000000282430-1	124	01	0	00000	0	11100	10000	4310	2100000	19.48
AMAZON CAPITAL SERVICES	000000022736648	58,306.94	GAXI-2100000-000000282430-1	125	01	0	90870	0	11100	10000	4310	2100000	2.13
AMAZON CAPITAL SERVICES	000000022761244	23,391.27	GAXI-2010000-000000283466-1	38	01	0	30100	2	11100	10000	4310	2010000	2,434.17
AMAZON CAPITAL SERVICES	000000022761244	23,391.27	GAXI-2150000-000000283465-1	37	01	0	67700	1	11100	10000	4310	2150000	58.93
AMAZON CAPITAL SERVICES	000000022733989	72,543.79	GAXI-2010000-000000282163-1	110	01	0	90704	0	11100	10000	4310	2010000	95.70
AMAZON CAPITAL SERVICES	000000022733989	72,543.79	GAXI-2100000-000000282107-1	63	01	0	65000	0	57602	11100	4310	2100000	147.84
AMAZON CAPITAL SERVICES	000000022733989	72,543.79	GAXI-2150000-000000282103-1	59	01	0	00000	0	11100	10000	4310	2150000	274.25
AMAZON CAPITAL SERVICES	000000022728871	68,038.40	GAXI-7460000-000000281803-1	146	01	0	90202	0	11100	10000	4310	7460000	-157.71
AMAZON CAPITAL SERVICES	000000022733989	72,543.79	GAXI-3220000-000000282082-1	35	01	0	00000	0	11100	10000	4310	3220000	112.24
AMAZON CAPITAL SERVICES	000000022728871	68,038.40	GAXI-7460000-000000281911-1	250	01	0	90203	0	11100	10000	4310	7460000	52.11
AMAZON CAPITAL SERVICES	000000022728871	68,038.40	GAXI-7460000-000000281892-1	228	01	0	90203	0	11100	10000	4310	7460000	737.63
AMAZON CAPITAL SERVICES	000000022736648	58,306.94	GAXI-7440000-000000282329-1	20	01	0	95640	0	57602	11100	4310	7440000	119.80
AMAZON CAPITAL SERVICES	000000022728871	68,038.40	GAXI-7450000-000000281697-1	58	01	0	00000	0	00000	72000	4310	7450000	46.41
AMAZON CAPITAL SERVICES	000000022728871	68,038.40	GAXI-2050000-000000281688-1	49	01	0	90870	0	11100	10000	4310	2050000	214.48
AMAZON CAPITAL SERVICES	000000022761244	23,391.27	GAXI-2150000-000000283471-1	42	01	0	90870	0	11100	10000	4310	2150000	95.02
AMAZON CAPITAL SERVICES	000000022736648	58,306.94	GAXI-2150000-000000282452-1	147	01	0	42010	1	47600	10000	4310	2150000	7.17
AMAZON CAPITAL SERVICES	000000022736648	58,306.94	GAXI-2150000-000000282452-1	148	01	0	42030	1	47600	10000	4310	2150000	15.55
AMAZON CAPITAL SERVICES	000000022736648	58,306.94	GAXI-2150000-000000282452-1	149	01	0	42010	2	47600	10000	4310	2150000	32.30
AMAZON CAPITAL SERVICES	000000022736648	58,306.94	GAXI-2090000-000000282426-1	120	01	0	00000	0	11100	10000	4310	2090000	351.23
AMAZON CAPITAL SERVICES	000000022728871	68,038.40	GAXI-2160000-000000281820-1	162	01	0	90201	0	11100	10000	4310	2160000	-43.63
AMAZON CAPITAL SERVICES	000000022736648	58,306.94	GAXI-2020000-000000282317-1	8	01	0	90870	0	11100	10000	4310	2020000	99.43
AMAZON CAPITAL SERVICES	000000022736648	58,306.94	GAXI-2150000-000000282363-1	49	01	0	42010	1	47600	10000	4310	2150000	11.00
AMAZON CAPITAL SERVICES	000000022736648	58,306.94	GAXI-2150000-000000282363-1	50	01	0	42010	2	47600	10000	4310	2150000	109.42
AMAZON CAPITAL SERVICES	000000022746725	1,766.39	GAXI-2150000-000000282745-1	7	01	0	65000	0	57602	11100	4310	2150000	242.62
AMAZON CAPITAL SERVICES	000000022733989	72,543.79	GAXI-7440000-000000282304-1	223	01	0	65000	0	57602	11100	4310	7440000	177.32
AMAZON CAPITAL SERVICES	000000022733989	72,543.79	GAXI-3220000-000000282302-1	221	01	0	00000	0	11100	10000	4310	3220000	140.28
AMAZON CAPITAL SERVICES	000000022736648	58,306.94	GAXI-2150000-000000282362-1	48	01	0	42010	1	47600	10000	4310	2150000	100.71
AMAZON CAPITAL SERVICES	000000022728871	68,038.40	GAXI-2150000-000000281844-1	191	01	0	65000	0	57602	11107	4310	2150000	189.04
AMAZON CAPITAL SERVICES	000000022728871	68,038.40	GAXI-7460000-000000281869-1	204	01	0	90203	0	11100	10000	4310	7460000	79.54
AMAZON CAPITAL SERVICES	000000022761244	23,391.27	GAXI-2150000-000000283440-1	28	01	0	00000	0	11100	10000	4310	2150000	70.00
AMAZON CAPITAL SERVICES	000000022733989	72,543.79	GAXI-2160000-000000282075-1	28	01	0	90201	0	11100	10000	4310	2160000	64.56
AMAZON CAPITAL SERVICES	000000022728871	68,038.40	GAXI-7460000-000000281864-1	199	01	0	90202	0	11100	10000	4310	7460000	317.20
AMAZON CAPITAL SERVICES	000000022761244	23,391.27	GAXI-2050000-000000283403-1	3	01	0	90870	0	11100	10000	4310	2050000	7.16

Vendor Name	Warrant Number	Warrant Amount	Payment Doc ID	Accounting Line No.	Fund	Sub-Fund	Resource	Project Year	Goal/Categorical	Function/Activity	Object	School Location/Dept	Line Amount
AMAZON CAPITAL SERVICES	000000022733989	72,543.79	GAXI-3220000-000000282058-1	11	01	0	65000	0	57602	11107	4310	3220000	160.07
AMAZON CAPITAL SERVICES	000000022728871	68,038.40	GAXI-7440000-000000281741-1	102	01	0	95640	0	11100	10000	4310	7440000	88.02
AMAZON CAPITAL SERVICES	000000022728871	68,038.40	GAXI-7460000-000000281872-1	207	01	0	90202	0	11100	10000	4310	7460000	83.43
AMAZON CAPITAL SERVICES	000000022761244	23,391.27	GAXI-2130000-000000283479-1	49	01	0	42030	1	47600	10000	4210	2130000	176.68
AMAZON CAPITAL SERVICES	000000022761244	23,391.27	GAXI-2130000-000000283479-1	50	01	0	42030	1	47600	10000	4310	2130000	219.80
AMAZON CAPITAL SERVICES	000000022733989	72,543.79	GAXI-5300000-000000282063-1	16	01	0	00000	0	11100	10000	4310	5300000	97.97
AMAZON CAPITAL SERVICES	000000022728871	68,038.40	GAXI-2050000-000000281687-1	48	01	0	90870	0	11100	10000	4310	2050000	189.09
AMAZON CAPITAL SERVICES	000000022728871	68,038.40	GAXI-4320000-000000281665-1	33	01	0	00000	0	11100	10000	4310	4320000	575.30
AMAZON CAPITAL SERVICES	000000022728871	68,038.40	GAXI-7420000-000000281664-1	32	01	0	26000	0	00000	31400	4410	7420000	47.23
AMAZON CAPITAL SERVICES	000000022728871	68,038.40	GAXI-2150000-000000281650-1	17	01	0	90870	0	11100	10000	4310	2150000	114.63
AMAZON CAPITAL SERVICES	000000022728871	68,038.40	GAXI-7460000-000000281897-1	235	01	0	90203	0	11100	10000	4310	7460000	506.87
AMAZON CAPITAL SERVICES	000000022728871	68,038.40	GAXI-2050000-000000281725-1	86	01	0	90870	0	11100	10000	4310	2050000	95.94
AMAZON CAPITAL SERVICES	000000022728871	68,038.40	GAXI-7460000-000000281902-1	241	01	0	90203	0	11100	10000	4310	7460000	170.10
AMAZON CAPITAL SERVICES	000000022728871	68,038.40	GAXI-7440000-000000281781-1	120	01	0	58100	0	57602	11100	4310	7440000	237.01
AMAZON CAPITAL SERVICES	000000022728871	68,038.40	GAXI-7440000-000000281780-1	119	01	0	65000	0	57602	11901	4310	7440000	35.66
AMAZON CAPITAL SERVICES	000000022733989	72,543.79	GAXI-2050000-000000282158-1	105	01	0	00000	0	11100	10000	4310	2050000	41.96
AMAZON CAPITAL SERVICES	000000022733989	72,543.79	GAXI-5330000-000000282114-1	69	11	0	63910	0	41104	10000	4310	5330000	3,718.69
AMAZON CAPITAL SERVICES	000000022733989	72,543.79	GAXI-5080000-000000282108-1	64	01	0	65000	0	57300	11100	4310	5080000	38.70
AMAZON CAPITAL SERVICES	000000022733989	72,543.79	GAXI-7420000-000000282092-1	48	01	0	63000	0	11100	10000	4310	7420000	17.65
AMAZON CAPITAL SERVICES	000000022733989	72,543.79	GAXI-2050000-000000282071-1	24	01	0	65000	0	57602	11100	4310	2050000	21.42
AMAZON CAPITAL SERVICES	000000022733989	72,543.79	GAXI-2030000-000000282273-1	206	01	0	90870	0	11100	10000	4310	2030000	62.36
AMAZON CAPITAL SERVICES	000000022733989	72,543.79	GAXI-2160000-000000282263-1	202	01	0	00000	0	00000	31400	4310	2160000	149.25
AMAZON CAPITAL SERVICES	000000022733989	72,543.79	GAXI-2150000-000000282241-1	189	01	0	42010	1	47600	10000	4310	2150000	50.82
AMAZON CAPITAL SERVICES	000000022733989	72,543.79	GAXI-2150000-000000282241-1	190	01	0	42010	2	47600	10000	4310	2150000	505.57
AMAZON CAPITAL SERVICES	000000022733989	72,543.79	GAXI-2150000-000000282225-1	174	01	0	00000	0	11100	10000	4310	2150000	254.93
AMAZON CAPITAL SERVICES	000000022728871	68,038.40	GAXI-2160000-000000281808-1	151	01	0	90704	0	11100	10000	4310	2160000	-104.27
AMAZON CAPITAL SERVICES	000000022728871	68,038.40	GAXI-2050000-000000281636-1	2	01	0	00000	0	15000	10000	4310	2050000	41.66
AMAZON CAPITAL SERVICES	000000022728871	68,038.40	GAXI-7460000-000000281783-1	122	01	0	90202	0	11100	10000	4310	7460000	14.68
AMAZON CAPITAL SERVICES	000000022761244	23,391.27	GAXI-4310000-000000283421-1	18	01	0	67700	2	11100	10000	4310	4310000	2,671.77
AMAZON CAPITAL SERVICES	000000022761244	23,391.27	GAXI-7490000-000000283419-1	16	13	0	53100	0	00000	37000	4310	7490000	296.96
AMAZON CAPITAL SERVICES	000000022733989	72,543.79	GAXI-7440000-000000282055-1	8	01	0	65200	0	57602	11106	4310	7440000	121.52
AMAZON CAPITAL SERVICES	000000022733989	72,543.79	GAXI-4310000-000000282234-1	183	01	0	00000	0	17003	10000	4310	4310000	791.75
AMAZON CAPITAL SERVICES	000000022728871	68,038.40	GAXI-7460000-000000281895-1	232	01	0	90203	0	11100	10000	4310	7460000	491.72
AMAZON CAPITAL SERVICES	000000022733989	72,543.79	GAXI-2150000-000000282167-1	114	01	0	00000	0	11100	10000	4310	2150000	205.99
AMAZON CAPITAL SERVICES	000000022733989	72,543.79	GAXI-3220000-000000282138-1	93	01	0	30100	2	11100	10000	4210	3220000	95.50
AMAZON CAPITAL SERVICES	000000022736648	58,306.94	GAXI-4310000-000000282407-1	95	01	0	00000	0	11100	10000	4310	4310000	252.22
AMAZON CAPITAL SERVICES	000000022733989	72,543.79	GAXI-5080000-000000282187-1	135	01	0	65000	0	57300	11100	4310	5080000	618.92
AMAZON CAPITAL SERVICES	000000022736648	58,306.94	GAXI-4320000-000000282178-1	5	01	0	90820	0	00000	24200	4310	4320000	35.34
AMAZON CAPITAL SERVICES	000000022728871	68,038.40	GAXI-2160000-000000281691-1	52	01	0	65000	0	57602	11100	4310	2160000	152.23
AMAZON CAPITAL SERVICES	000000022728871	68,038.40	GAXI-7440000-000000281749-1	109	01	0	58100	0	57602	11100	4790	7440000	58.76
AMAZON CAPITAL SERVICES	000000022728871	68,038.40	GAXI-7440000-000000281749-1	110	01	0	58100	0	57602	11100	4310	7440000	300.36
AMAZON CAPITAL SERVICES	000000022733989	72,543.79	GAXI-3210000-000000282154-1	103	01	0	00000	0	11100	10000	4310	3210000	293.64
AMAZON CAPITAL SERVICES	000000022733989	72,543.79	GAXI-2150000-000000282116-1	71	01	0	00000	0	15000	10000	4310	2150000	193.23
AMAZON CAPITAL SERVICES	000000022736648	58,306.94	GAXI-2050000-000000282110-1	1	01	0	90704	0	11100	10000	4310	2050000	223.40
AMAZON CAPITAL SERVICES	000000022733989	72,543.79	GAXI-2060000-000000282214-1	161	01	0	42010	2	47600	10000	4310	2060000	375.16
AMAZON CAPITAL SERVICES	000000022733989	72,543.79	GAXI-7490000-000000282204-1	151	13	0	53100	0	00000	37000	4310	7490000	240.56
AMAZON CAPITAL SERVICES	000000022733989	72,543.79	GAXI-4310000-000000282188-1	136	01	0	67700	2	17001	10000	4310	4310000	1,861.42
AMAZON CAPITAL SERVICES	000000022761244	23,391.27	GAXI-7460000-000000283429-1	25	01	0	00000	0	17000	10000	4381	7460000	130.94
AMAZON CAPITAL SERVICES	000000022733989	72,543.79	GAXI-5300000-000000282303-1	222	01	0	00000	0	11100	10000	4310	5300000	71.05
AMAZON CAPITAL SERVICES	000000022733989	72,543.79	GAXI-2140000-000000282181-1	129	01	0	42010	1	47600	10000	4210	2140000	103.67
AMAZON CAPITAL SERVICES	000000022733989	72,543.79	GAXI-4310000-000000282172-1	120	01	0	00000	0	13400	10000	4310	4310000	942.84
AMAZON CAPITAL SERVICES	000000022733989	72,543.79	GAXI-2150000-000000282171-1	119	01	0	00000	0	15000	10000	4310	2150000	525.09
AMAZON CAPITAL SERVICES	000000022728871	68,038.40	GAXI-7460000-000000281889-1	225	01	0	90202	0	11100	10000	4310	7460000	779.58
AMAZON CAPITAL SERVICES	000000022728871	68,038.40	GAXI-2150000-000000281837-1	182	01	0	90870	0	11100	10000	4310	2150000	-19.60
AMAZON CAPITAL SERVICES	000000022728871	68,038.40	GAXI-7460000-000000281881-1	216	01	0	90203	0	11100	10000	4310	7460000	414.38
AMAZON CAPITAL SERVICES	000000022733989	72,543.79	GAXI-7440000-000000282217-1	164	01	0	95640	0	11100	10000	4310	7440000	254.88
AMAZON CAPITAL SERVICES	000000022733989	72,543.79	GAXI-3200000-000000282192-1	140	01	0	67700	1	11100	10000	4310	3200000	1,096.73
AMAZON CAPITAL SERVICES	000000022733989	72,543.79	GAXI-2090000-000000282184-1	132	01	0	00000	0	11100	10000	4310	2090000	1,905.76
AMAZON CAPITAL SERVICES	000000022733989	72,543.79	GAXI-4320000-000000282176-1	125	01	0	90820	0	00000	24200	4210	4320000	62.40

Vendor Name	Warrant Number	Warrant Amount	Payment Doc ID	Accounting Line No.	Fund	Sub-Fund	Resource	Project Year	Goal/Categorical	Function/Activity	Object	School Location/Dept	Line Amount
AMAZON CAPITAL SERVICES	000000022736648	58,306.94	GAXI-2030000-000000282405-1	93	01	0	00000	0	11100	10000	4310	2030000	55.23
AMAZON CAPITAL SERVICES	000000022736648	58,306.94	GAXI-2020000-000000282398-1	87	01	0	00000	0	11100	10000	4310	2020000	238.22
AMAZON CAPITAL SERVICES	000000022733989	72,543.79	GAXI-4320000-000000282090-1	46	01	0	00000	0	11100	10000	4310	4320000	1,380.92
AMAZON CAPITAL SERVICES	000000022733989	72,543.79	GAXI-7440000-000000282074-1	27	01	0	65000	0	57601	31409	4310	7440000	218.28
AMAZON CAPITAL SERVICES	000000022736648	58,306.94	GAXI-7540000-000000282454-1	151	12	0	90602	0	11100	10000	4310	7540000	124.73
AMAZON CAPITAL SERVICES	000000022736648	58,306.94	GAXI-2010000-000000282445-1	139	01	0	30100	2	11100	10000	4310	2010000	661.15
AMAZON CAPITAL SERVICES	000000022728871	68,038.40	GAXI-7460000-000000281893-1	229	01	0	90203	0	11100	10000	4310	7460000	847.74
AMAZON CAPITAL SERVICES	000000022733989	72,543.79	GAXI-7440000-000000282197-1	145	01	0	65000	0	57601	31409	4310	7440000	197.59
AMAZON CAPITAL SERVICES	000000022733989	72,543.79	GAXI-2140000-000000282191-1	139	01	0	90201	0	11100	10000	4310	2140000	123.80
AMAZON CAPITAL SERVICES	000000022733989	72,543.79	GAXI-2150000-000000282175-1	124	01	0	00000	0	11100	10000	4310	2150000	140.15
AMAZON CAPITAL SERVICES	000000022728871	68,038.40	GAXI-7460000-000000281898-1	236	01	0	90203	0	11100	10000	4310	7460000	1,276.68
AMAZON CAPITAL SERVICES	000000022728871	68,038.40	GAXI-7460000-000000281885-1	221	01	0	90202	0	11100	10000	4310	7460000	1,180.54
AMAZON CAPITAL SERVICES	000000022761244	23,391.27	GAXI-3220000-000000283461-1	33	01	0	00000	0	11100	10000	4310	3220000	694.66
AMAZON CAPITAL SERVICES	000000022728871	68,038.40	GAXI-2010000-000000281800-1	143	01	0	90704	0	11100	10000	4310	2010000	-247.90
AMAZON CAPITAL SERVICES	000000022733989	72,543.79	GAXI-2030000-000000282086-1	39	01	0	65000	0	57602	11107	4310	2030000	17.66
AMAZON CAPITAL SERVICES	000000022733989	72,543.79	GAXI-2050000-000000282083-1	36	01	0	90870	0	11100	10000	4310	2050000	105.38
AMAZON CAPITAL SERVICES	000000022728871	68,038.40	GAXI-7460000-000000281926-1	262	01	0	63850	1	38000	10000	4310	7460000	588.07
AMAZON CAPITAL SERVICES	000000022736648	58,306.94	GAXI-7540000-000000282392-1	81	12	0	61051	1	11100	10000	4310	7540000	3,180.91
AMAZON CAPITAL SERVICES	000000022728871	68,038.40	GAXI-7460000-000000281905-1	244	01	0	90203	0	11100	10000	4310	7460000	635.36
AMAZON CAPITAL SERVICES	000000022736648	58,306.94	GAXI-2010000-000000282401-1	90	01	0	90201	0	00000	24200	4310	2010000	409.69
AMAZON CAPITAL SERVICES	000000022733989	72,543.79	GAXI-5300000-000000282062-1	15	01	0	00000	0	11100	10000	4310	5300000	44.49
AMAZON CAPITAL SERVICES	000000022746725	1,766.39	GAXI-4310000-000000282706-1	1	01	0	67700	2	11100	10000	4310	4310000	1,007.52
AMAZON CAPITAL SERVICES	000000022728871	68,038.40	GAXI-5080000-000000281661-1	28	01	0	65000	0	57300	11100	4310	5080000	8.27
AMAZON CAPITAL SERVICES	000000022728871	68,038.40	GAXI-2050000-000000281658-1	25	01	0	90870	0	11100	10000	4310	2050000	40.68
AMAZON CAPITAL SERVICES	000000022728871	68,038.40	GAXI-4310000-000000281652-1	19	01	0	00000	0	13800	10000	4310	4310000	448.30
AMAZON CAPITAL SERVICES	000000022761244	23,391.27	GAXI-2150000-000000283407-1	7	01	0	00000	0	11100	10000	4310	2150000	656.32
AMAZON CAPITAL SERVICES	000000022728871	68,038.40	GAXI-2060000-000000281828-1	171	01	0	00000	0	11100	10000	4310	2060000	-44.58
AMAZON CAPITAL SERVICES	000000022733989	72,543.79	GAXI-2030000-000000282312-1	235	01	0	65000	0	57602	11107	4310	2030000	217.80
AMAZON CAPITAL SERVICES	000000022728871	68,038.40	GAXI-7460000-000000281836-1	181	01	0	90203	0	11100	10000	4310	7460000	-17.67
AMAZON CAPITAL SERVICES	000000022728871	68,038.40	GAXI-7460000-000000281877-1	212	01	0	90202	0	11100	10000	4310	7460000	1,266.41
AMAZON CAPITAL SERVICES	000000022733989	72,543.79	GAXI-2150000-000000282106-1	62	01	0	90201	0	11100	10000	4310	2150000	298.05
AMAZON CAPITAL SERVICES	000000022733989	72,543.79	GAXI-5330000-000000282102-1	58	11	0	63910	0	41102	10000	4310	5330000	773.71
AMAZON CAPITAL SERVICES	000000022733989	72,543.79	GAXI-4320000-000000282088-1	41	01	0	65000	0	57602	11107	4310	4320000	49.47
AMAZON CAPITAL SERVICES	000000022733989	72,543.79	GAXI-3220000-000000282076-1	29	01	0	67700	3	17001	10000	4310	3220000	194.32
AMAZON CAPITAL SERVICES	000000022733989	72,543.79	GAXI-5300000-000000282066-1	19	01	0	00000	0	11100	10000	4310	5300000	28.32
AMAZON CAPITAL SERVICES	000000022736648	58,306.94	GAXI-2130000-000000282373-1	60	01	0	00000	0	11100	10000	4310	2130000	173.21
AMAZON CAPITAL SERVICES	000000022736648	58,306.94	GAXI-2030000-000000282370-1	57	01	0	30100	2	11100	10000	4310	2030000	110.30
AMAZON CAPITAL SERVICES	000000022736648	58,306.94	GAXI-2100000-000000282354-1	40	01	0	00000	0	11100	10000	4310	2100000	18.62
AMAZON CAPITAL SERVICES	000000022736648	58,306.94	GAXI-4320000-000000282337-1	28	01	0	00000	0	11100	10000	4310	4320000	44.16
AMAZON CAPITAL SERVICES	000000022733989	72,543.79	GAXI-7450000-000000282265-1	203	01	0	00000	0	00000	72000	4310	7450000	20.04
AMAZON CAPITAL SERVICES	000000022733989	72,543.79	GAXI-2160000-000000282260-1	200	01	0	30100	2	11100	10000	4310	2160000	646.18
AMAZON CAPITAL SERVICES	000000022733989	72,543.79	GAXI-5330000-000000282243-1	192	11	0	63910	0	41101	27000	4310	5330000	1.38
AMAZON CAPITAL SERVICES	000000022733989	72,543.79	GAXI-5330000-000000282243-1	193	11	0	63910	0	41102	27000	4310	5330000	13.90
AMAZON CAPITAL SERVICES	000000022733989	72,543.79	GAXI-5330000-000000282243-1	194	11	0	63910	0	41104	27000	4310	5330000	9.73
AMAZON CAPITAL SERVICES	000000022733989	72,543.79	GAXI-5330000-000000282243-1	195	11	0	63910	0	41106	27000	4310	5330000	2.78
AMAZON CAPITAL SERVICES	000000022733989	72,543.79	GAXI-2010000-000000282235-1	184	01	0	30100	2	11100	10000	4310	2010000	59.85
AMAZON CAPITAL SERVICES	000000022733989	72,543.79	GAXI-2130000-000000282224-1	173	01	0	67700	3	11100	10000	4310	2130000	49.71
AMAZON CAPITAL SERVICES	000000022728871	68,038.40	GAXI-2090000-000000281710-1	71	01	0	00000	0	11100	10000	4310	2090000	22.08
AMAZON CAPITAL SERVICES	000000022733989	72,543.79	GAXI-5330000-000000282218-1	165	11	0	63910	0	41101	27000	4310	5330000	12.67
AMAZON CAPITAL SERVICES	000000022733989	72,543.79	GAXI-5330000-000000282218-1	166	11	0	63910	0	41102	27000	4310	5330000	126.71
AMAZON CAPITAL SERVICES	000000022733989	72,543.79	GAXI-5330000-000000282218-1	167	11	0	63910	0	41104	27000	4310	5330000	88.70
AMAZON CAPITAL SERVICES	000000022733989	72,543.79	GAXI-5330000-000000282218-1	168	11	0	63910	0	41106	27000	4310	5330000	25.34
AMAZON CAPITAL SERVICES	000000022733989	72,543.79	GAXI-5080000-000000282201-1	148	01	0	65000	0	57300	11100	4310	5080000	41.55
AMAZON CAPITAL SERVICES	000000022736648	58,306.94	GAXI-5080000-000000282390-1	80	01	0	65000	0	57300	11100	4310	5080000	66.51
AMAZON CAPITAL SERVICES	000000022761244	23,391.27	GAXI-7420000-000000283409-1	9	01	0	63000	0	11100	10000	4310	7420000	49.48
AMAZON CAPITAL SERVICES	000000022728871	68,038.40	GAXI-7460000-000000281809-1	152	01	0	90202	0	11100	10000	4310	7460000	-335.57
AMAZON CAPITAL SERVICES	000000022761244	23,391.27	GAXI-2050000-000000283405-1	5	01	0	90870	0	11100	10000	4310	2050000	55.24
AMAZON CAPITAL SERVICES	000000022728871	68,038.40	GAXI-7460000-000000281847-1	194	01	0	90202	0	11100	10000	4310	7460000	689.21
AMAZON CAPITAL SERVICES	000000022761244	23,391.27	GAXI-2020000-000000283422-1	19	01	0	90870	0	11100	10000	4310	2020000	180.51

Vendor Name	Warrant Number	Warrant Amount	Payment Doc ID	Accounting Line No.	Fund	Sub-Fund	Resource	Project Year	Goal/Categorical	Function/Activity	Object	School Location/Dept	Line Amount
AMAZON CAPITAL SERVICES	000000022761244	23,391.27	GAXI-2020000-000000283473-1	44	01	0	00000	0	11100	10000	4310	2020000	320.52
AMAZON CAPITAL SERVICES	000000022728871	68,038.40	GAXI-7440000-000000281747-1	107	01	0	65000	0	57601	31420	4310	7440000	43.99
AMAZON CAPITAL SERVICES	000000022761244	23,391.27	GAXI-2150000-000000283470-1	41	01	0	67700	1	11100	10000	4310	2150000	687.67
AMAZON CAPITAL SERVICES	000000022733989	72,543.79	GAXI-3220000-000000282057-1	10	01	0	65000	0	57602	11107	4310	3220000	77.34
AMAZON CAPITAL SERVICES	000000022728871	68,038.40	GAXI-7440000-000000281743-1	104	01	0	65000	0	57602	11100	4310	7440000	231.15
AMAZON CAPITAL SERVICES	000000022746725	1,766.39	GAXI-3220000-000000282708-1	2	01	0	00000	0	11100	10000	4310	3220000	97.04
AMAZON CAPITAL SERVICES	000000022761244	23,391.27	GAXI-3220000-000000283432-1	27	01	0	00000	0	13400	10000	4310	3220000	52.98
AMAZON CAPITAL SERVICES	000000022728871	68,038.40	GAXI-2010000-000000281791-1	131	01	0	65000	0	57602	11107	4310	2010000	68.13
AMAZON CAPITAL SERVICES	000000022736648	58,306.94	GAXI-2150000-000000282483-1	174	01	0	42010	1	47600	10000	4310	2150000	22.08
AMAZON CAPITAL SERVICES	000000022728871	68,038.40	GAXI-2010000-000000281797-1	140	01	0	65000	0	57602	11107	4310	2010000	-7.72
AMAZON CAPITAL SERVICES	000000022736648	58,306.94	GAXI-7470000-000000282481-1	172	01	0	00000	0	00000	72000	4310	7470000	423.69
AMAZON CAPITAL SERVICES	000000022733989	72,543.79	GAXI-7440000-000000282054-1	7	01	0	65200	0	57602	11106	4310	7440000	143.48
AMAZON CAPITAL SERVICES	000000022736648	58,306.94	GAXI-2100000-000000282350-1	36	01	0	90870	0	11100	10000	4310	2100000	1,551.20
AMAZON CAPITAL SERVICES	000000022733989	72,543.79	GAXI-2140000-000000282098-1	54	01	0	90201	0	11100	10000	4310	2140000	60.76
AMAZON CAPITAL SERVICES	000000022733989	72,543.79	GAXI-5330000-000000282089-1	42	11	0	63910	0	41101	27000	4310	5330000	12.09
AMAZON CAPITAL SERVICES	000000022733989	72,543.79	GAXI-5330000-000000282089-1	43	11	0	63910	0	41102	27000	4310	5330000	120.82
AMAZON CAPITAL SERVICES	000000022733989	72,543.79	GAXI-5330000-000000282089-1	44	11	0	63910	0	41104	27000	4310	5330000	84.58
AMAZON CAPITAL SERVICES	000000022733989	72,543.79	GAXI-5330000-000000282089-1	45	11	0	63910	0	41106	27000	4310	5330000	24.16
AMAZON CAPITAL SERVICES	000000022733989	72,543.79	GAXI-2020000-000000282087-1	40	01	0	67700	3	11100	10000	4310	2020000	138.83
AMAZON CAPITAL SERVICES	000000022728871	68,038.40	GAXI-5330000-000000281663-1	30	11	0	63910	0	41101	10000	4310	5330000	42.79
AMAZON CAPITAL SERVICES	000000022728871	68,038.40	GAXI-5330000-000000281663-1	31	11	0	63910	0	41106	10000	4310	5330000	242.50
AMAZON CAPITAL SERVICES	000000022733989	72,543.79	GAXI-7440000-000000282049-1	2	01	0	65200	0	57602	11106	4310	7440000	358.24
AMAZON CAPITAL SERVICES	000000022761244	23,391.27	GAXI-7420000-000000283426-1	23	01	0	00000	0	00000	72000	4310	7420000	77.34
AMAZON CAPITAL SERVICES	000000022728871	68,038.40	GAXI-7520000-000000281831-1	174	01	0	81500	0	00000	81100	4310	7520000	-44.16
AMAZON CAPITAL SERVICES	000000022733989	72,543.79	GAXI-2150000-000000282091-1	47	01	0	42030	1	47600	10000	4310	2150000	123.79
AMAZON CAPITAL SERVICES	000000022728871	68,038.40	GAXI-7460000-000000281912-1	251	01	0	90203	0	11100	10000	4310	7460000	636.20
AMAZON CAPITAL SERVICES	000000022728871	68,038.40	GAXI-7460000-000000281910-1	249	01	0	90203	0	11100	10000	4310	7460000	77.32
AMAZON CAPITAL SERVICES	000000022728871	68,038.40	GAXI-7460000-000000281904-1	243	01	0	90203	0	11100	10000	4310	7460000	52.11
AMAZON CAPITAL SERVICES	000000022736648	58,306.94	GAXI-4310000-000000282361-1	47	01	0	00000	0	17003	10000	4310	4310000	185.22
AMAZON CAPITAL SERVICES	000000022733989	72,543.79	GAXI-2140000-000000282164-1	111	01	0	90201	0	11100	10000	4310	2140000	299.42
AMAZON CAPITAL SERVICES	000000022733989	72,543.79	GAXI-7470000-000000282112-1	67	01	0	00000	0	00000	72000	4410	7470000	589.51
AMAZON CAPITAL SERVICES	000000022749197	2,452.54	GAXI-3200000-000000282834-1	2	01	0	67700	1	11100	10000	4316	3200000	425.29
AMAZON CAPITAL SERVICES	000000022749197	2,452.54	GAXI-3200000-000000282834-1	3	01	0	67700	1	11100	10000	4310	3200000	1,275.87
AMAZON CAPITAL SERVICES	000000022728871	68,038.40	GAXI-7440000-000000281792-1	132	01	0	58100	0	57602	11100	4310	7440000	-187.84
AMAZON CAPITAL SERVICES	000000022733989	72,543.79	GAXI-7440000-000000282048-1	1	01	0	65200	0	57602	11106	4310	7440000	55.15
AMAZON CAPITAL SERVICES	000000022733989	72,543.79	GAXI-2030000-000000282068-1	21	01	0	00000	0	11100	10000	4310	2030000	24.83
AMAZON CAPITAL SERVICES	000000022728871	68,038.40	GAXI-7460000-000000281894-1	230	01	0	90202	0	11100	10000	4310	7460000	130.07
AMAZON CAPITAL SERVICES	000000022728871	68,038.40	GAXI-7460000-000000281894-1	231	01	0	90202	0	11100	10000	4410	7460000	1,347.54
AMAZON CAPITAL SERVICES	000000022728871	68,038.40	GAXI-7400000-000000281891-1	227	01	0	00000	0	00000	72000	4310	7400000	15.45
AMAZON CAPITAL SERVICES	000000022761244	23,391.27	GAXI-3220000-000000283457-1	32	01	0	00000	0	13400	10000	4310	3220000	8.39
AMAZON CAPITAL SERVICES	000000022728871	68,038.40	GAXI-2050000-000000281653-1	20	01	0	90870	0	11100	10000	4310	2050000	41.93
AMAZON CAPITAL SERVICES	000000022736648	58,306.94	GAXI-2160000-000000282440-1	135	01	0	30100	2	11100	10000	4310	2160000	353.06
AMAZON CAPITAL SERVICES	000000022736648	58,306.94	GAXI-2150000-000000282381-1	68	01	0	42010	1	47600	10000	4310	2150000	18.84
AMAZON CAPITAL SERVICES	000000022736648	58,306.94	GAXI-2150000-000000282381-1	69	01	0	42010	2	47600	10000	4310	2150000	97.18
AMAZON CAPITAL SERVICES	000000022733989	72,543.79	GAXI-2010000-000000282216-1	163	01	0	30100	2	11100	10000	4310	2010000	11.04
AMAZON CAPITAL SERVICES	000000022733989	72,543.79	GAXI-7440000-000000282206-1	153	01	0	65200	0	57602	11100	4410	7440000	475.14
AMAZON CAPITAL SERVICES	000000022728871	68,038.40	GAXI-7460000-000000281900-1	238	01	0	90202	0	11100	10000	4310	7460000	10.50
AMAZON CAPITAL SERVICES	000000022728871	68,038.40	GAXI-7460000-000000281900-1	239	01	0	90202	0	11100	10000	4410	7460000	108.83
AMAZON CAPITAL SERVICES	000000022733989	72,543.79	GAXI-2030000-000000282085-1	38	01	0	30100	2	11100	10000	4310	2030000	102.72
AMAZON CAPITAL SERVICES	000000022761244	23,391.27	GAXI-3210000-000000283424-1	21	01	0	00000	0	11100	10000	4310	3210000	276.53
AMAZON CAPITAL SERVICES	000000022746725	1,766.39	GAXI-2150000-000000282742-1	4	01	0	90870	0	11100	10000	4310	2150000	58.73
AMAZON CAPITAL SERVICES	000000022733989	72,543.79	GAXI-4310000-000000282072-1	25	01	0	00000	0	13800	10000	4310	4310000	273.14
AMAZON CAPITAL SERVICES	000000022728871	68,038.40	GAXI-7440000-000000281750-1	111	01	0	58100	0	57602	11100	4790	7440000	46.81
AMAZON CAPITAL SERVICES	000000022728871	68,038.40	GAXI-7440000-000000281750-1	112	01	0	58100	0	57602	11100	4310	7440000	239.27
AMAZON CAPITAL SERVICES	000000022736648	58,306.94	GAXI-3210000-000000282459-1	156	01	0	00000	0	11100	10000	4310	3210000	203.16
AMAZON CAPITAL SERVICES	000000022736648	58,306.94	GAXI-5330000-000000282458-1	155	11	0	63910	0	41102	10000	4310	5330000	2,664.10
AMAZON CAPITAL SERVICES	000000022736648	58,306.94	GAXI-3220000-000000282444-1	138	01	0	00000	0	13400	10000	4310	3220000	246.04
AMAZON CAPITAL SERVICES	000000022761244	23,391.27	GAXI-7490000-000000283399-1	1	13	0	53100	0	00000	37000	4310	7490000	3,842.40
AMAZON CAPITAL SERVICES	000000022736648	58,306.94	GAXI-5330000-000000282396-1	85	11	0	63910	0	41102	10000	4310	5330000	96.06

Vendor Name	Warrant Number	Warrant Amount	Payment Doc ID	Accounting Line No.	Fund	Sub-Fund	Resource	Project Year	Goal/Categorical	Function/Activity	Object	School Location/Dept	Line Amount
AMAZON CAPITAL SERVICES	000000022736648	58,306.94	GAXI-2160000-000000282386-1	76	01	0	30100	2	11100	10000	4310	2160000	1,076.71
AMAZON CAPITAL SERVICES	000000022733989	72,543.79	GAXI-7440000-000000282052-1	5	01	0	65200	0	57602	11106	4310	7440000	462.21
AMAZON CAPITAL SERVICES	000000022736648	58,306.94	GAXI-7440000-000000282406-1	94	01	0	65000	0	57601	31409	4310	7440000	30.93
AMAZON CAPITAL SERVICES	000000022728871	68,038.40	GAXI-2010000-000000281727-1	88	01	0	30100	2	11100	10000	4310	2010000	142.09
AMAZON CAPITAL SERVICES	000000022733989	72,543.79	GAXI-7440000-000000282099-1	55	01	0	65000	0	57602	11100	4310	7440000	99.74
AMAZON CAPITAL SERVICES	000000022736648	58,306.94	GAXI-2030000-000000282418-1	109	01	0	90870	0	11100	10000	4310	2030000	349.56
AMAZON CAPITAL SERVICES	000000022728871	68,038.40	GAXI-4320000-000000281833-1	176	01	0	42010	1	47600	10000	4310	4320000	-233.21
AMAZON CAPITAL SERVICES	000000022728871	68,038.40	GAXI-4320000-000000281833-1	177	01	0	42010	2	47600	10000	4310	4320000	-316.97
AMAZON CAPITAL SERVICES	000000022728871	68,038.40	GAXI-4320000-000000281833-1	178	01	0	42010	0	47600	10000	4310	4320000	-0.02
AMAZON CAPITAL SERVICES	000000022728871	68,038.40	GAXI-7460000-000000281907-1	246	01	0	90203	0	11100	10000	4310	7460000	365.33
AMAZON CAPITAL SERVICES	000000022728871	68,038.40	GAXI-7440000-000000281746-1	106	01	0	95640	0	11100	10000	4310	7440000	95.05
AMAZON CAPITAL SERVICES	000000022733989	72,543.79	GAXI-2030000-000000282205-1	152	01	0	30100	2	11100	10000	4310	2030000	489.91
AMAZON CAPITAL SERVICES	000000022733989	72,543.79	GAXI-4320000-000000282202-1	149	01	0	00000	0	11100	10000	4310	4320000	406.03
AMAZON CAPITAL SERVICES	000000022728871	68,038.40	GAXI-7460000-000000281845-1	192	01	0	90203	0	11100	10000	4310	7460000	364.35
AMAZON CAPITAL SERVICES	000000022728871	68,038.40	GAXI-2050000-000000281703-1	64	01	0	90870	0	11100	10000	4310	2050000	212.64
AMAZON CAPITAL SERVICES	000000022736648	58,306.94	GAXI-5300000-000000282410-1	99	01	0	00000	0	11100	10000	4310	5300000	117.97
AMAZON CAPITAL SERVICES	000000022728871	68,038.40	GAXI-7460000-000000281875-1	209	01	0	90202	0	11100	10000	4310	7460000	70.31
AMAZON CAPITAL SERVICES	000000022728871	68,038.40	GAXI-7460000-000000281875-1	210	01	0	90202	0	11100	10000	4410	7460000	44.41
AMAZON CAPITAL SERVICES	000000022733989	72,543.79	GAXI-7440000-000000282053-1	6	01	0	65200	0	57602	11106	4310	7440000	65.26
AMAZON CAPITAL SERVICES	000000022761244	23,391.27	GAXI-2150000-000000283474-1	45	01	0	90870	0	11100	10000	4310	2150000	93.23
AMAZON CAPITAL SERVICES	000000022728871	68,038.40	GAXI-7440000-000000281776-1	115	01	0	65000	0	57602	11100	4310	7440000	106.06
AMAZON CAPITAL SERVICES	000000022728871	68,038.40	GAXI-7460000-000000281924-1	260	01	0	63850	1	38000	10000	4310	7460000	564.10
AMAZON CAPITAL SERVICES	000000022728871	68,038.40	GAXI-2090000-000000281923-1	256	01	0	42010	2	47600	10000	4310	2090000	7.99
AMAZON CAPITAL SERVICES	000000022728871	68,038.40	GAXI-2090000-000000281923-1	257	01	0	42010	2	47600	10000	4210	2090000	11.26
AMAZON CAPITAL SERVICES	000000022728871	68,038.40	GAXI-2090000-000000281923-1	258	01	0	42030	2	47600	10000	4310	2090000	11.56
AMAZON CAPITAL SERVICES	000000022728871	68,038.40	GAXI-2090000-000000281923-1	259	01	0	42030	2	47600	24950	4310	2090000	6.23
AMAZON CAPITAL SERVICES	000000022733989	72,543.79	GAXI-3200000-000000282310-1	230	01	0	00000	0	11100	10000	4310	3200000	1,102.94
AMAZON CAPITAL SERVICES	000000022733989	72,543.79	GAXI-2020000-000000282247-1	199	01	0	90870	0	11100	10000	4310	2020000	68.04
AMAZON CAPITAL SERVICES	000000022733989	72,543.79	GAXI-7730000-000000282239-1	187	01	0	00000	0	00000	77000	4310	7730000	56.29
AMAZON CAPITAL SERVICES	000000022733989	72,543.79	GAXI-7440000-000000282153-1	102	01	0	95640	0	11100	10000	4310	7440000	2,674.44
AMAZON CAPITAL SERVICES	000000022733989	72,543.79	GAXI-4310000-000000282145-1	100	01	0	67700	2	17001	10000	4310	4310000	56.16
AMAZON CAPITAL SERVICES	000000022733989	72,543.79	GAXI-2050000-000000282143-1	98	01	0	65000	0	57602	11100	4310	2050000	107.14
AMAZON CAPITAL SERVICES	000000022736648	58,306.94	GAXI-2160000-000000282365-1	52	01	0	67700	1	11100	10000	4310	2160000	966.80
AMAZON CAPITAL SERVICES	000000022736648	58,306.94	GAXI-2150000-000000282364-1	51	01	0	90201	0	11100	10000	4310	2150000	135.72
AMAZON CAPITAL SERVICES	000000022736648	58,306.94	GAXI-7440000-000000282348-1	34	01	0	95640	0	11100	10000	4310	7440000	96.89
AMAZON CAPITAL SERVICES	000000022728871	68,038.40	GAXI-2150000-000000281793-1	133	01	0	90201	0	11100	10000	4310	2150000	-27.38
AMAZON CAPITAL SERVICES	000000022736648	58,306.94	GAXI-7440000-000000282463-1	162	01	0	95640	0	11100	10000	4310	7440000	55.63
AMAZON CAPITAL SERVICES	000000022736648	58,306.94	GAXI-7420000-000000282416-1	107	01	0	63000	0	11100	10000	4310	7420000	53.00
AMAZON CAPITAL SERVICES	000000022733989	72,543.79	GAXI-5300000-000000282065-1	18	01	0	00000	0	11100	10000	4310	5300000	53.45
AMAZON CAPITAL SERVICES	000000022736648	58,306.94	GAXI-2020000-000000282450-1	144	01	0	90870	0	11100	10000	4310	2020000	66.93
AMAZON CAPITAL SERVICES	000000022736648	58,306.94	GAXI-3200000-000000282432-1	127	01	0	00000	0	11100	10000	4310	3200000	410.41
AMAZON CAPITAL SERVICES	000000022733989	72,543.79	GAXI-2090000-000000282280-1	212	01	0	30100	2	11100	10000	4210	2090000	298.97
AMAZON CAPITAL SERVICES	000000022733989	72,543.79	GAXI-7440000-000000282139-1	94	01	0	65000	0	57602	11100	4310	7440000	136.04
AMAZON CAPITAL SERVICES	000000022733989	72,543.79	GAXI-2160000-000000282122-1	80	01	0	90870	0	11100	10000	4310	2160000	65.81
AMAZON CAPITAL SERVICES	000000022733989	72,543.79	GAXI-7540000-000000282111-1	66	12	0	90602	0	11100	10000	4310	7540000	650.14
AMAZON CAPITAL SERVICES	000000022761244	23,391.27	GAXI-3220000-000000283469-1	40	01	0	67700	1	17007	10000	4310	3220000	278.15
AMAZON CAPITAL SERVICES	000000022728871	68,038.40	GAXI-7460000-000000281903-1	242	01	0	90203	0	11100	10000	4310	7460000	790.54
AMAZON CAPITAL SERVICES	000000022728871	68,038.40	GAXI-5300000-000000281871-1	206	01	0	00000	0	11100	10000	4310	5300000	28.66
AMAZON CAPITAL SERVICES	000000022736648	58,306.94	GAXI-2060000-000000282371-1	58	01	0	65000	0	57602	11100	4310	2060000	21.65
AMAZON CAPITAL SERVICES	000000022728871	68,038.40	GAXI-7460000-000000281920-1	254	01	0	63850	1	38000	10000	4310	7460000	38.71
AMAZON CAPITAL SERVICES	000000022736648	58,306.94	GAXI-7440000-000000282395-1	84	01	0	95640	0	11100	10000	4310	7440000	830.95
AMAZON CAPITAL SERVICES	000000022733989	72,543.79	GAXI-2030000-000000282306-1	226	01	0	00000	0	11100	10000	4310	2030000	243.51
AMAZON CAPITAL SERVICES	000000022733989	72,543.79	GAXI-7440000-000000282246-1	198	01	0	65000	0	57601	31420	4310	7440000	659.26
AMAZON CAPITAL SERVICES	000000022733989	72,543.79	GAXI-7440000-000000282242-1	191	01	0	65000	0	57602	11901	4310	7440000	76.52
AMAZON CAPITAL SERVICES	000000022736648	58,306.94	GAXI-7440000-000000282402-1	91	01	0	65000	0	57602	11100	4310	7440000	347.00
AMAZON CAPITAL SERVICES	000000022736648	58,306.94	GAXI-3220000-000000282408-1	96	01	0	00000	0	11100	10000	4310	3220000	60.75
AMAZON CAPITAL SERVICES	000000022736648	58,306.94	GAXI-2150000-000000282400-1	89	01	0	90201	0	11100	10000	4310	2150000	233.06
AMAZON CAPITAL SERVICES	000000022733989	72,543.79	GAXI-7420000-000000282121-1	79	01	0	00000	0	00000	72000	4310	7420000	132.30
AMAZON CAPITAL SERVICES	000000022733989	72,543.79	GAXI-5170000-000000282157-1	104	01	0	65000	0	57601	11100	4310	5170000	151.18

Vendor Name	Warrant Number	Warrant Amount	Payment Doc ID	Accounting Line No.	Fund	Sub-Fund	Resource	Project Year	Goal/Categorical	Function/Activity	Object	School Location/Dept	Line Amount
AMAZON CAPITAL SERVICES	000000022761244	23,391.27	GAXI-3220000-000000283472-1	43	01	0	00000	0	11100	10000	4310	3220000	68.94
AMAZON CAPITAL SERVICES	000000022728871	68,038.40	GAXI-5300000-000000281839-1	184	01	0	00000	0	11100	10000	4310	5300000	-33.24
AMAZON CAPITAL SERVICES	000000022749197	2,452.54	GAXI-2160000-000000282835-1	4	01	0	90201	0	11100	10000	4310	2160000	49.70
AMAZON CAPITAL SERVICES	000000022733989	72,543.79	GAXI-5330000-000000282113-1	68	11	0	63910	0	41104	10000	4310	5330000	2,430.99
AMAZON CAPITAL SERVICES	000000022733989	72,543.79	GAXI-2060000-000000282159-1	106	01	0	90870	0	11100	10000	4310	2060000	112.95
AMAZON CAPITAL SERVICES	000000022733989	72,543.79	GAXI-2100000-000000282133-1	88	01	0	90870	0	11100	10000	4310	2100000	62.96
AMAZON CAPITAL SERVICES	000000022733989	72,543.79	GAXI-2030000-000000282130-1	85	01	0	90870	0	11100	10000	4310	2030000	342.63
AMAZON CAPITAL SERVICES	000000022733989	72,543.79	GAXI-2060000-000000282115-1	70	01	0	42010	2	47600	10000	4310	2060000	915.08
AMAZON CAPITAL SERVICES	000000022736648	58,306.94	GAXI-7520000-000000282480-1	171	01	0	81500	0	00000	81100	4310	7520000	298.32
AMAZON CAPITAL SERVICES	000000022736648	58,306.94	GAXI-7470000-000000282469-1	166	01	0	00000	0	00000	72000	4410	7470000	888.88
AMAZON CAPITAL SERVICES	000000022736648	58,306.94	GAXI-2150000-000000282464-1	163	01	0	90201	0	11100	10000	4310	2150000	160.55
AMAZON CAPITAL SERVICES	000000022728871	68,038.40	GAXI-2100000-000000281732-1	93	01	0	00000	0	11100	10000	4310	2100000	284.33
AMAZON CAPITAL SERVICES	000000022728871	68,038.40	GAXI-2100000-000000281732-1	94	01	0	90870	0	11100	10000	4310	2100000	31.11
AMAZON CAPITAL SERVICES	000000022728871	68,038.40	GAXI-7730000-000000281719-1	80	01	0	00000	0	00000	77000	4310	7730000	502.55
AMAZON CAPITAL SERVICES	000000022728871	68,038.40	GAXI-7460000-000000281790-1	130	01	0	90202	0	11100	10000	4310	7460000	204.41
AMAZON CAPITAL SERVICES	000000022736648	58,306.94	GAXI-7420000-000000282397-1	86	01	0	26000	0	00000	31400	4410	7420000	87.66
AMAZON CAPITAL SERVICES	000000022736648	58,306.94	GAXI-4320000-000000282387-1	77	01	0	00000	0	11100	10000	4310	4320000	416.84
AMAZON CAPITAL SERVICES	000000022736648	58,306.94	GAXI-2160000-000000282414-1	105	01	0	00000	0	11100	10000	4310	2160000	1,344.22
AMAZON CAPITAL SERVICES	000000022728871	68,038.40	GAXI-7460000-000000281862-1	197	01	0	90203	0	11100	10000	4310	7460000	64.02
AMAZON CAPITAL SERVICES	000000022728871	68,038.40	GAXI-2050000-000000281795-1	138	01	0	65000	0	57602	11100	4310	2050000	-7.56
AMAZON CAPITAL SERVICES	000000022728871	68,038.40	GAXI-5330000-000000281794-1	134	11	0	63910	0	41101	27000	4310	5330000	-1.14
AMAZON CAPITAL SERVICES	000000022728871	68,038.40	GAXI-5330000-000000281794-1	135	11	0	63910	0	41102	27000	4310	5330000	-11.32
AMAZON CAPITAL SERVICES	000000022728871	68,038.40	GAXI-5330000-000000281794-1	136	11	0	63910	0	41104	27000	4310	5330000	-7.92
AMAZON CAPITAL SERVICES	000000022728871	68,038.40	GAXI-5330000-000000281794-1	137	11	0	63910	0	41106	27000	4310	5330000	-2.26
AMAZON CAPITAL SERVICES	000000022728871	68,038.40	GAXI-5170000-000000281674-1	41	01	0	65000	0	57601	11100	4310	5170000	74.12
AMAZON CAPITAL SERVICES	000000022728871	68,038.40	GAXI-7460000-000000281785-1	124	01	0	90202	0	11100	10000	4310	7460000	64.23
AMAZON CAPITAL SERVICES	000000022728871	68,038.40	GAXI-7460000-000000281785-1	125	01	0	90202	0	11100	10000	4410	7460000	40.57
AMAZON CAPITAL SERVICES	000000022728871	68,038.40	GAXI-4320000-000000281654-1	21	01	0	00000	0	11100	10000	4210	4320000	34.97
AMAZON CAPITAL SERVICES	000000022728871	68,038.40	GAXI-7460000-000000281807-1	150	01	0	90202	0	11100	10000	4310	7460000	-204.41
AMAZON CAPITAL SERVICES	000000022728871	68,038.40	GAXI-7440000-000000281778-1	117	01	0	58100	0	57602	11100	4310	7440000	746.73
AMAZON CAPITAL SERVICES	000000022728871	68,038.40	GAXI-5300000-000000281675-1	42	01	0	00000	0	11100	10000	4310	5300000	228.39
AMAZON CAPITAL SERVICES	000000022728871	68,038.40	GAXI-5330000-000000281666-1	34	11	0	63910	0	41102	10000	4310	5330000	241.32
AMAZON CAPITAL SERVICES	000000022761244	23,391.27	GAXI-3220000-000000283408-1	8	01	0	00000	0	11100	10000	4310	3220000	600.48
AMAZON CAPITAL SERVICES	000000022733989	72,543.79	GAXI-4310000-000000282309-1	229	01	0	65000	0	57602	11107	4310	4310000	66.90
AMAZON CAPITAL SERVICES	000000022728871	68,038.40	GAXI-2140000-000000281802-1	145	01	0	90201	0	11100	10000	4310	2140000	-60.66
AMAZON CAPITAL SERVICES	000000022736648	58,306.94	GAXI-7440000-000000282437-1	132	01	0	95640	0	11100	10000	4310	7440000	444.57
AMAZON CAPITAL SERVICES	000000022728871	68,038.40	GAXI-7400000-000000281878-1	213	01	0	00000	0	00000	72000	4310	7400000	30.36
AMAZON CAPITAL SERVICES	000000022736648	58,306.94	GAXI-5300000-000000282156-1	4	01	0	00000	0	32000	31400	4310	5300000	450.80
AMAZON CAPITAL SERVICES	000000022733989	72,543.79	GAXI-2140000-000000282125-1	81	01	0	00000	0	11100	10000	4310	2140000	284.01
AMAZON CAPITAL SERVICES	000000022733989	72,543.79	GAXI-2100000-000000282168-1	115	01	0	00000	0	11100	10000	4310	2100000	154.42
AMAZON CAPITAL SERVICES	000000022733989	72,543.79	GAXI-2100000-000000282168-1	116	01	0	90870	0	11100	10000	4310	2100000	16.90
AMAZON CAPITAL SERVICES	000000022733989	72,543.79	GAXI-2150000-000000282127-1	83	01	0	90704	0	11100	10000	4310	2150000	144.75
AMAZON CAPITAL SERVICES	000000022733989	72,543.79	GAXI-5330000-000000282117-1	72	11	0	63910	0	41102	10000	4310	5330000	298.20
AMAZON CAPITAL SERVICES	000000022728871	68,038.40	GAXI-7460000-000000281849-1	196	01	0	90202	0	11100	10000	4310	7460000	3,704.72
AMAZON CAPITAL SERVICES	000000022761244	23,391.27	GAXI-2150000-000000283456-1	31	01	0	00000	0	11100	10000	4310	2150000	25.72
AMAZON CAPITAL SERVICES	000000022728871	68,038.40	GAXI-5300000-000000281925-1	261	01	0	00000	0	11100	10000	4310	5300000	79.76
AMAZON CAPITAL SERVICES	000000022746725	1,766.39	GAXI-7470000-000000282752-1	12	01	0	00000	0	00000	72000	4310	7470000	68.40
AMAZON CAPITAL SERVICES	000000022761244	23,391.27	GAXI-3220000-000000283400-1	2	01	0	65000	0	57602	11107	4310	3220000	88.01
AMAZON CAPITAL SERVICES	000000022736648	58,306.94	GAXI-5300000-000000282448-1	142	01	0	00000	0	11100	10000	4310	5300000	233.72
AMAZON CAPITAL SERVICES	000000022728871	68,038.40	GAXI-2100000-000000281730-1	91	01	0	00000	0	11100	10000	4310	2100000	34.38
AMAZON CAPITAL SERVICES	000000022728871	68,038.40	GAXI-2050000-000000281714-1	75	01	0	90870	0	11100	10000	4310	2050000	198.58
AMAZON CAPITAL SERVICES	000000022736648	58,306.94	GAXI-5080000-000000282322-1	13	01	0	65000	0	57300	11100	4310	5080000	207.50
AMAZON CAPITAL SERVICES	000000022733989	72,543.79	GAXI-5330000-000000282311-1	231	11	0	63910	0	41101	27000	4310	5330000	2.67
AMAZON CAPITAL SERVICES	000000022733989	72,543.79	GAXI-5330000-000000282311-1	232	11	0	63910	0	41102	27000	4310	5330000	26.60
AMAZON CAPITAL SERVICES	000000022733989	72,543.79	GAXI-5330000-000000282311-1	233	11	0	63910	0	41104	27000	4310	5330000	18.62
AMAZON CAPITAL SERVICES	000000022733989	72,543.79	GAXI-5330000-000000282311-1	234	11	0	63910	0	41106	27000	4310	5330000	5.32
AMAZON CAPITAL SERVICES	000000022736648	58,306.94	GAXI-2020000-000000282467-1	165	01	0	67700	3	11100	10000	4310	2020000	67.32
AMAZON CAPITAL SERVICES	000000022728871	68,038.40	GAXI-3200000-000000281798-1	141	01	0	30100	2	11100	10000	4310	3200000	-202.31
AMAZON CAPITAL SERVICES	000000022736648	58,306.94	GAXI-2100000-000000282409-1	97	01	0	00000	0	11100	10000	4310	2100000	475.31

Vendor Name	Warrant Number	Warrant Amount	Payment Doc ID	Accounting Line No.	Fund	Sub-Fund	Resource	Project Year	Goal/Categorical	Function/Activity	Object	School Location/Dept	Line Amount
AMAZON CAPITAL SERVICES	000000022736648	58,306.94	GAXI-2100000-000000282409-1	98	01	0	90870	0	11100	10000	4310	2100000	52.01
AMAZON CAPITAL SERVICES	000000022728871	68,038.40	GAXI-2010000-000000281735-1	97	01	0	30100	2	11100	10000	4310	2010000	665.94
AMAZON CAPITAL SERVICES	000000022728871	68,038.40	GAXI-4320000-000000281720-1	81	01	0	00000	0	11100	10000	4310	4320000	97.56
AMAZON CAPITAL SERVICES	000000022728871	68,038.40	GAXI-2010000-000000281718-1	79	01	0	90201	0	00000	24200	4310	2010000	14.82
AMAZON CAPITAL SERVICES	000000022728871	68,038.40	GAXI-2050000-000000281712-1	73	01	0	90870	0	11100	10000	4310	2050000	31.15
AMAZON CAPITAL SERVICES	000000022733989	72,543.79	GAXI-2030000-000000282141-1	96	01	0	67700	1	11100	10000	4310	2030000	243.41
AMAZON CAPITAL SERVICES	000000022733989	72,543.79	GAXI-2100000-000000282140-1	95	01	0	67700	1	11100	10000	4310	2100000	180.53
AMAZON CAPITAL SERVICES	000000022733989	72,543.79	GAXI-4310000-000000282134-1	89	01	0	00000	0	11100	10000	4310	4310000	185.24
AMAZON CAPITAL SERVICES	000000022733989	72,543.79	GAXI-2020000-000000282132-1	87	01	0	67700	3	11100	10000	4310	2020000	1,548.09
AMAZON CAPITAL SERVICES	000000022733989	72,543.79	GAXI-7440000-000000282126-1	82	01	0	65000	0	57601	31409	4310	7440000	191.29
AMAZON CAPITAL SERVICES	000000022733989	72,543.79	GAXI-5330000-000000282120-1	75	11	0	63910	0	41101	27000	4310	5330000	14.51
AMAZON CAPITAL SERVICES	000000022733989	72,543.79	GAXI-5330000-000000282120-1	76	11	0	63910	0	41102	27000	4310	5330000	145.08
AMAZON CAPITAL SERVICES	000000022733989	72,543.79	GAXI-5330000-000000282120-1	77	11	0	63910	0	41104	27000	4310	5330000	101.56
AMAZON CAPITAL SERVICES	000000022733989	72,543.79	GAXI-5330000-000000282120-1	78	11	0	63910	0	41106	27000	4310	5330000	29.02
AMAZON CAPITAL SERVICES	000000022733989	72,543.79	GAXI-2090000-000000282119-1	74	01	0	00000	0	15000	10000	4310	2090000	20.96
AMAZON CAPITAL SERVICES	000000022733989	72,543.79	GAXI-4310000-000000282118-1	73	01	0	00000	0	11100	10000	4310	4310000	103.84
AMAZON CAPITAL SERVICES	000000022736648	58,306.94	GAXI-2010000-000000282403-1	92	01	0	90704	0	11100	10000	4310	2010000	77.26
AMAZON CAPITAL SERVICES	000000022736648	58,306.94	GAXI-2010000-000000282388-1	78	01	0	30100	2	11100	10000	4310	2010000	135.67
AMAZON CAPITAL SERVICES	000000022736648	58,306.94	GAXI-2050000-000000282413-1	104	01	0	00000	0	11100	10000	4310	2050000	15.75
AMAZON CAPITAL SERVICES	000000022733989	72,543.79	GAXI-5300000-000000282061-1	14	01	0	00000	0	11100	10000	4310	5300000	90.92
AMAZON CAPITAL SERVICES	000000022761244	23,391.27	GAXI-2150000-000000283475-1	46	01	0	65000	0	57602	11100	4310	2150000	216.66
AMAZON CAPITAL SERVICES	000000022728871	68,038.40	GAXI-7440000-000000281777-1	116	01	0	95640	0	57602	11100	4310	7440000	320.44
AMAZON CAPITAL SERVICES	000000022728871	68,038.40	GAXI-3210000-000000281817-1	159	01	0	00000	0	11100	10000	4310	3210000	-111.26
AMAZON CAPITAL SERVICES	000000022728871	68,038.40	GAXI-2100000-000000281676-1	43	01	0	00000	0	11100	10000	4310	2100000	82.33
AMAZON CAPITAL SERVICES	000000022728871	68,038.40	GAXI-2150000-000000281657-1	24	01	0	42030	1	47600	10000	4310	2150000	133.64
AMAZON CAPITAL SERVICES	000000022728871	68,038.40	GAXI-7490000-000000281805-1	148	13	0	53100	0	00000	37000	4310	7490000	-143.36
AMAZON CAPITAL SERVICES	000000022728871	68,038.40	GAXI-5080000-000000281705-1	66	01	0	65000	0	57300	11100	4310	5080000	38.77
AMAZON CAPITAL SERVICES	000000022728871	68,038.40	GAXI-2150000-000000281788-1	128	01	0	65000	0	57602	11107	4310	2150000	67.81
AMAZON CAPITAL SERVICES	000000022728871	68,038.40	GAXI-3200000-000000281696-1	57	01	0	67700	1	11100	10000	4310	3200000	14.35
AMAZON CAPITAL SERVICES	000000022761244	23,391.27	GAXI-2130000-000000283477-1	47	01	0	42030	1	47600	10000	4210	2130000	10.83
AMAZON CAPITAL SERVICES	000000022761244	23,391.27	GAXI-2130000-000000283477-1	48	01	0	42030	1	47600	10000	4310	2130000	13.47
AMAZON CAPITAL SERVICES	000000022728871	68,038.40	GAXI-7440000-000000281779-1	118	01	0	95640	0	57602	11100	4310	7440000	271.77
AMAZON CAPITAL SERVICES	000000022746725	1,766.39	GAXI-2150000-000000282744-1	6	01	0	90870	0	11100	10000	4310	2150000	18.77
AMAZON CAPITAL SERVICES	000000022728871	68,038.40	GAXI-2060000-000000281840-1	185	01	0	42010	2	47600	10000	4310	2060000	-22.27
AMAZON CAPITAL SERVICES	000000022733989	72,543.79	GAXI-7440000-000000282056-1	9	01	0	65200	0	57602	11106	4310	7440000	522.12
AMAZON CAPITAL SERVICES	000000022761244	23,391.27	GAXI-3220000-000000283463-1	35	01	0	00000	0	13400	10000	4310	3220000	267.12
AMAZON CAPITAL SERVICES	000000022728871	68,038.40	GAXI-2150000-000000281827-1	170	01	0	90870	0	11100	10000	4310	2150000	-37.76
AMAZON CAPITAL SERVICES	000000022728871	68,038.40	GAXI-7460000-000000281874-1	208	01	0	90202	0	11100	10000	4310	7460000	2,852.82
AMAZON CAPITAL SERVICES	000000022728871	68,038.40	GAXI-2050000-000000281695-1	56	01	0	90870	0	11100	10000	4310	2050000	204.98
AMAZON CAPITAL SERVICES	000000022728871	68,038.40	GAXI-7460000-000000281908-1	247	01	0	90203	0	11100	10000	4310	7460000	1,384.60
AMAZON CAPITAL SERVICES	000000022736648	58,306.94	GAXI-2030000-000000282460-1	157	01	0	00000	0	11100	10000	4310	2030000	103.94
AMAZON CAPITAL SERVICES	000000022736648	58,306.94	GAXI-4310000-000000282436-1	131	01	0	00000	0	13400	10000	4310	4310000	160.87
AMAZON CAPITAL SERVICES	000000022733989	72,543.79	GAXI-2160000-000000282274-1	207	01	0	67700	1	11100	10000	4310	2160000	597.52
AMAZON CAPITAL SERVICES	000000022733989	72,543.79	GAXI-5330000-000000282229-1	178	11	0	63910	0	41104	10000	4310	5330000	184.73
AMAZON CAPITAL SERVICES	000000022733989	72,543.79	GAXI-2150000-000000282226-1	175	01	0	90870	0	11100	10000	4310	2150000	101.85
AMAZON CAPITAL SERVICES	000000022736648	58,306.94	GAXI-7440000-000000282372-1	59	01	0	65000	0	57602	11100	4310	7440000	103.06
AMAZON CAPITAL SERVICES	000000022736648	58,306.94	GAXI-2010000-000000282368-1	55	01	0	90201	0	00000	24200	4310	2010000	17.49
AMAZON CAPITAL SERVICES	000000022736648	58,306.94	GAXI-7420000-000000282352-1	38	01	0	26000	0	00000	31400	4410	7420000	33.12
AMAZON CAPITAL SERVICES	000000022736648	58,306.94	GAXI-2130000-000000282347-1	33	01	0	67700	3	11100	10000	4310	2130000	185.58
AMAZON CAPITAL SERVICES	000000022728871	68,038.40	GAXI-5330000-000000281648-1	12	11	0	63910	0	41101	27000	4310	5330000	9.03
AMAZON CAPITAL SERVICES	000000022728871	68,038.40	GAXI-5330000-000000281648-1	13	11	0	63910	0	41102	27000	4310	5330000	90.38
AMAZON CAPITAL SERVICES	000000022728871	68,038.40	GAXI-5330000-000000281648-1	14	11	0	63910	0	41104	27000	4310	5330000	63.26
AMAZON CAPITAL SERVICES	000000022728871	68,038.40	GAXI-5330000-000000281648-1	15	11	0	63910	0	41106	27000	4310	5330000	18.08
AMAZON CAPITAL SERVICES	000000022728871	68,038.40	GAXI-5300000-000000281922-1	255	01	0	00000	0	11100	10000	4310	5300000	837.33
AMAZON CAPITAL SERVICES	000000022728871	68,038.40	GAXI-7440000-000000281748-1	108	01	0	65200	0	57602	11106	4310	7440000	123.55
AMAZON CAPITAL SERVICES	000000022728871	68,038.40	GAXI-2050000-000000281671-1	38	01	0	65000	0	57602	11100	4310	2050000	373.79
AMAZON CAPITAL SERVICES	000000022728871	68,038.40	GAXI-2150000-000000281810-1	153	01	0	90870	0	11100	10000	4310	2150000	-50.71
AMAZON CAPITAL SERVICES	000000022728871	68,038.40	GAXI-2050000-000000281642-1	6	01	0	90870	0	11100	10000	4310	2050000	203.50
AMAZON CAPITAL SERVICES	000000022728871	68,038.40	GAXI-7540000-000000281684-1	45	12	0	90602	0	11100	10000	4310	7540000	214.85

Vendor Name	Warrant Number	Warrant Amount	Payment Doc ID	Accounting Line No.	Fund	Sub-Fund	Resource	Project Year	Goal/Categorical	Function/Activity	Object	School Location/Dept	Line Amount
AMAZON CAPITAL SERVICES	000000022728871	68,038.40	GAXI-2030000-000000281635-1	1	01	0	00000	0	11100	10000	4310	2030000	177.70
AMAZON CAPITAL SERVICES	000000022728871	68,038.40	GAXI-7460000-000000281835-1	180	01	0	90203	0	11100	10000	4310	7460000	-49.22
AMAZON CAPITAL SERVICES	000000022736648	58,306.94	GAXI-3220000-000000282323-1	14	01	0	00000	0	13400	10000	4310	3220000	115.12
AMAZON CAPITAL SERVICES	000000022736648	58,306.94	GAXI-2060000-000000282319-1	10	01	0	90870	0	11100	10000	4310	2060000	1,359.29
AMAZON CAPITAL SERVICES	000000022728871	68,038.40	GAXI-7420000-000000281787-1	127	01	0	00000	0	11100	10000	4310	7420000	2,380.02
AMAZON CAPITAL SERVICES	000000022733989	72,543.79	GAXI-5300000-000000282213-1	160	01	0	00000	0	11100	10000	4310	5300000	267.56
AMAZON CAPITAL SERVICES	000000022728871	68,038.40	GAXI-2010000-000000281723-1	84	01	0	90704	0	11100	10000	4310	2010000	1,484.04
AMAZON CAPITAL SERVICES	000000022736648	58,306.94	GAXI-7470000-000000282479-1	170	01	0	00000	0	00000	72000	4310	7470000	182.66
AMAZON CAPITAL SERVICES	000000022728871	68,038.40	GAXI-7460000-000000281867-1	202	01	0	90203	0	11100	10000	4310	7460000	82.83
AMAZON CAPITAL SERVICES	000000022728871	68,038.40	GAXI-7460000-000000281866-1	201	01	0	90202	0	11100	10000	4310	7460000	447.04
AMAZON CAPITAL SERVICES	000000022728871	68,038.40	GAXI-2090000-000000281841-1	186	01	0	42010	2	47600	10000	4310	2090000	-7.40
AMAZON CAPITAL SERVICES	000000022728871	68,038.40	GAXI-2090000-000000281841-1	187	01	0	42010	2	47600	10000	4210	2090000	-10.40
AMAZON CAPITAL SERVICES	000000022728871	68,038.40	GAXI-2090000-000000281841-1	188	01	0	42030	2	47600	10000	4310	2090000	-10.68
AMAZON CAPITAL SERVICES	000000022728871	68,038.40	GAXI-2090000-000000281841-1	189	01	0	42030	2	47600	24950	4310	2090000	-5.75
AMAZON CAPITAL SERVICES	000000022728871	68,038.40	GAXI-7400000-000000281865-1	200	01	0	00000	0	00000	72000	4310	7400000	4.21
AMAZON CAPITAL SERVICES	000000022736648	58,306.94	GAXI-2150000-000000282374-1	61	01	0	42030	1	47600	10000	4310	2150000	8.77
AMAZON CAPITAL SERVICES	000000022736648	58,306.94	GAXI-2150000-000000282374-1	62	01	0	00000	0	11100	10000	4310	2150000	6.67
AMAZON CAPITAL SERVICES	000000022728871	68,038.40	GAXI-2160000-000000281796-1	139	01	0	30100	2	11100	10000	4310	2160000	-15.70
AMAZON CAPITAL SERVICES	000000022736648	58,306.94	GAXI-7440000-000000282379-1	65	01	0	65000	0	57601	31420	4310	7440000	417.71
AMAZON CAPITAL SERVICES	000000022736648	58,306.94	GAXI-4320000-000000282336-1	27	01	0	00000	0	11100	10000	4210	4320000	130.98
AMAZON CAPITAL SERVICES	000000022736648	58,306.94	GAXI-2010000-000000282324-1	15	01	0	30100	2	11100	10000	4310	2010000	622.62
AMAZON CAPITAL SERVICES	000000022761244	23,391.27	GAXI-2150000-000000283428-1	24	01	0	90201	0	11100	10000	4310	2150000	392.83
AMAZON CAPITAL SERVICES	000000022728871	68,038.40	GAXI-7460000-000000281848-1	195	01	0	90202	0	11100	10000	4310	7460000	2,106.26
AMAZON CAPITAL SERVICES	000000022736648	58,306.94	GAXI-2100000-000000282328-1	18	01	0	00000	0	11100	10000	4310	2100000	152.02
AMAZON CAPITAL SERVICES	000000022736648	58,306.94	GAXI-2100000-000000282328-1	19	01	0	90870	0	11100	10000	4310	2100000	16.64
AMAZON CAPITAL SERVICES	000000022736648	58,306.94	GAXI-2060000-000000282327-1	17	01	0	65000	0	57602	11107	4310	2060000	225.01
AMAZON CAPITAL SERVICES	000000022736648	58,306.94	GAXI-2020000-000000282316-1	7	01	0	42010	2	47600	10000	4310	2020000	212.17
AMAZON CAPITAL SERVICES	000000022736648	58,306.94	GAXI-4320000-000000282326-1	16	01	0	65000	0	57602	11107	4310	4320000	262.24
AMAZON CAPITAL SERVICES	000000022733989	72,543.79	GAXI-5300000-000000282067-1	20	01	0	00000	0	11100	10000	4310	5300000	30.26
AMAZON CAPITAL SERVICES	000000022761244	23,391.27	GAXI-2020000-000000283412-1	11	01	0	00000	0	11100	10000	4310	2020000	421.21
AMAZON CAPITAL SERVICES	000000022736648	58,306.94	GAXI-2130000-000000282417-1	108	01	0	67700	3	11100	10000	4310	2130000	42.18
AMAZON CAPITAL SERVICES	000000022736648	58,306.94	GAXI-7470000-000000282394-1	83	01	0	00000	0	00000	72000	4310	7470000	41.63
AMAZON CAPITAL SERVICES	000000022736648	58,306.94	GAXI-7440000-000000282478-1	169	01	0	95640	0	11100	10000	4310	7440000	530.42
AMAZON CAPITAL SERVICES	000000022736648	58,306.94	GAXI-7490000-000000282470-1	167	13	0	53100	0	00000	37000	4310	7490000	897.19
AMAZON CAPITAL SERVICES	000000022728871	68,038.40	GAXI-7460000-000000281886-1	222	01	0	90203	0	11100	10000	4310	7460000	1,526.18
AMAZON CAPITAL SERVICES	000000022761244	23,391.27	GAXI-2150000-000000283467-1	39	01	0	90870	0	11100	10000	4310	2150000	96.45
AMAZON CAPITAL SERVICES	000000022736648	58,306.94	GAXI-2150000-000000282399-1	88	01	0	90870	0	11100	10000	4310	2150000	179.79
AMAZON CAPITAL SERVICES	000000022728871	68,038.40	GAXI-2050000-000000281659-1	26	01	0	90870	0	11100	10000	4310	2050000	208.56
AMAZON CAPITAL SERVICES	000000022733989	72,543.79	GAXI-4320000-000000282183-1	131	01	0	00000	0	11100	10000	4310	4320000	242.32
AMAZON CAPITAL SERVICES	000000022736648	58,306.94	GAXI-2060000-000000282366-1	53	01	0	90880	0	13400	10000	4310	2060000	14.57
AMAZON CAPITAL SERVICES	000000022736648	58,306.94	GAXI-5330000-000000282353-1	39	11	0	63910	0	41102	10000	4310	5330000	759.06
AMAZON CAPITAL SERVICES	000000022736648	58,306.94	GAXI-2060000-000000282420-1	111	01	0	00000	0	11100	10000	4310	2060000	76.00
AMAZON CAPITAL SERVICES	000000022733989	72,543.79	GAXI-5080000-000000282105-1	61	01	0	65000	0	57300	11100	4310	5080000	10.44
AMAZON CAPITAL SERVICES	000000022733989	72,543.79	GAXI-7540000-000000282101-1	57	12	0	90602	0	11100	10000	4310	7540000	155.30
AMAZON CAPITAL SERVICES	000000022728871	68,038.40	GAXI-2050000-000000281724-1	85	01	0	90870	0	11100	10000	4310	2050000	15.46
AMAZON CAPITAL SERVICES	000000022761244	23,391.27	GAXI-4310000-000000283480-1	51	01	0	00000	0	13400	10000	4310	4310000	413.11
AMAZON CAPITAL SERVICES	000000022728871	68,038.40	GAXI-5300000-000000281707-1	68	01	0	00000	0	11100	10000	4310	5300000	44.79
AMAZON CAPITAL SERVICES	000000022728871	68,038.40	GAXI-7440000-000000281702-1	63	01	0	65000	0	57602	11907	4310	7440000	81.00
AMAZON CAPITAL SERVICES	000000022733989	72,543.79	GAXI-7440000-000000282136-1	91	01	0	65000	0	57602	11907	4310	7440000	324.80
AMAZON CAPITAL SERVICES	000000022728871	68,038.40	GAXI-2030000-000000281711-1	72	01	0	67700	1	11100	10000	4310	2030000	216.04
AMAZON CAPITAL SERVICES	000000022733989	72,543.79	GAXI-2050000-000000282244-1	196	01	0	65000	0	57602	11100	4310	2050000	20.97
AMAZON CAPITAL SERVICES	000000022733989	72,543.79	GAXI-5080000-000000282236-1	185	01	0	65000	0	57300	11100	4310	5080000	176.80
AMAZON CAPITAL SERVICES	000000022733989	72,543.79	GAXI-2140000-000000282277-1	210	01	0	90201	0	11100	10000	4310	2140000	643.30
AMAZON CAPITAL SERVICES	000000022733989	72,543.79	GAXI-4320000-000000282272-1	205	01	0	90820	0	00000	24200	4210	4320000	1,426.34
AMAZON CAPITAL SERVICES	000000022733989	72,543.79	GAXI-5080000-000000282267-1	204	01	0	65000	0	57300	11100	4310	5080000	142.25
AMAZON CAPITAL SERVICES	000000022733989	72,543.79	GAXI-7490000-000000282237-1	186	13	0	53100	0	00000	37000	4310	7490000	1,168.00
AMAZON CAPITAL SERVICES	000000022733989	72,543.79	GAXI-2160000-000000282232-1	181	01	0	30100	1	11100	10000	4210	2160000	31.90
AMAZON CAPITAL SERVICES	000000022736648	58,306.94	GAXI-5080000-000000282477-1	168	01	0	65000	0	57300	11100	4310	5080000	38.78
AMAZON CAPITAL SERVICES	000000022728871	68,038.40	GAXI-7460000-000000281882-1	217	01	0	90202	0	11100	10000	4310	7460000	799.00

Vendor Name	Warrant Number	Warrant Amount	Payment Doc ID	Accounting Line No.	Fund	Sub-Fund	Resource	Project Year	Goal/Categorical	Function/Activity	Object	School Location/Dept	Line Amount
AMAZON CAPITAL SERVICES	000000022728871	68,038.40	GAXI-7460000-000000281882-1	218	01	0	90202	0	11100	10000	4410	7460000	504.62
AMAZON CAPITAL SERVICES	000000022736648	58,306.94	GAXI-2020000-000000282318-1	9	01	0	00000	0	11100	10000	4310	2020000	928.61
AMAZON CAPITAL SERVICES	000000022746725	1,766.39	GAXI-2150000-000000282750-1	10	01	0	90870	0	11100	10000	4310	2150000	10.28
AMAZON CAPITAL SERVICES	000000022736648	58,306.94	GAXI-4320000-000000282367-1	54	01	0	00000	0	11100	10000	4310	4320000	2,273.44
AMAZON CAPITAL SERVICES	000000022736648	58,306.94	GAXI-2160000-000000282335-1	26	01	0	30100	2	11100	10000	4310	2160000	454.20
AMAZON CAPITAL SERVICES	000000022733989	72,543.79	GAXI-4310000-000000282212-1	159	01	0	65000	0	57602	11107	4310	4310000	287.74
AMAZON CAPITAL SERVICES	000000022733989	72,543.79	GAXI-2020000-000000282186-1	134	01	0	00000	0	11100	10000	4310	2020000	1,488.33
AMAZON CAPITAL SERVICES	000000022736648	58,306.94	GAXI-2030000-000000282340-1	32	01	0	90201	0	11100	10000	4310	2030000	155.28
AMAZON CAPITAL SERVICES	000000022736648	58,306.94	GAXI-2090000-000000282338-1	29	01	0	00000	0	11100	10000	4310	2090000	22.08
AMAZON CAPITAL SERVICES	000000022736648	58,306.94	GAXI-5300000-000000282332-1	24	01	0	00000	0	11100	10000	4310	5300000	114.71
AMAZON CAPITAL SERVICES	000000022736648	58,306.94	GAXI-4320000-000000282356-1	42	01	0	65000	0	57602	11100	4310	4320000	501.48
AMAZON CAPITAL SERVICES	000000022733989	72,543.79	GAXI-7440000-000000282142-1	97	01	0	58100	0	57602	11100	4310	7440000	532.07
AMAZON CAPITAL SERVICES	000000022736648	58,306.94	GAXI-2060000-000000282128-1	2	01	0	01500	0	11110	10012	4310	2060000	205.23
AMAZON CAPITAL SERVICES	000000022733989	72,543.79	GAXI-2100000-000000282305-1	224	01	0	00000	0	11100	10000	4310	2100000	332.16
AMAZON CAPITAL SERVICES	000000022733989	72,543.79	GAXI-2100000-000000282305-1	225	01	0	90870	0	11100	10000	4310	2100000	36.35
AMAZON CAPITAL SERVICES	000000022733989	72,543.79	GAXI-7440000-000000282233-1	182	01	0	95640	0	57602	11100	4310	7440000	11.04
AMAZON CAPITAL SERVICES	000000022736648	58,306.94	GAXI-5170000-000000282331-1	23	01	0	65000	0	57601	11100	4310	5170000	49.82
AMAZON CAPITAL SERVICES	000000022736648	58,306.94	GAXI-4310000-000000282321-1	12	01	0	65000	0	57602	11107	4310	4310000	340.56
AMAZON CAPITAL SERVICES	000000022728871	68,038.40	GAXI-2060000-000000281834-1	179	01	0	90870	0	11100	10000	4310	2060000	-30.83
AMAZON CAPITAL SERVICES	000000022728871	68,038.40	GAXI-7460000-000000281888-1	224	01	0	90203	0	11100	10000	4310	7460000	416.93
AMAZON CAPITAL SERVICES	000000022728871	68,038.40	GAXI-7440000-000000281752-1	113	01	0	95640	0	57602	11100	4310	7440000	61.32
AMAZON CAPITAL SERVICES	000000022736648	58,306.94	GAXI-2150000-000000282411-1	100	01	0	42010	1	47600	10000	4310	2150000	4.31
AMAZON CAPITAL SERVICES	000000022736648	58,306.94	GAXI-2150000-000000282411-1	101	01	0	42030	1	47600	10000	4310	2150000	9.37
AMAZON CAPITAL SERVICES	000000022736648	58,306.94	GAXI-2150000-000000282411-1	102	01	0	42010	2	47600	10000	4310	2150000	19.46
AMAZON CAPITAL SERVICES	000000022746725	1,766.39	GAXI-2150000-000000282743-1	5	01	0	00000	0	11100	10000	4310	2150000	55.74
AMAZON CAPITAL SERVICES	000000022728871	68,038.40	GAXI-2150000-000000281813-1	155	01	0	90201	0	11100	10000	4310	2150000	-31.80
AMAZON CAPITAL SERVICES	000000022728871	68,038.40	GAXI-2160000-000000281672-1	39	01	0	65000	0	57602	11107	4310	2160000	20.64
AMAZON CAPITAL SERVICES	000000022733989	72,543.79	GAXI-2160000-000000282211-1	158	01	0	90704	0	11100	10000	4310	2160000	326.13
AMAZON CAPITAL SERVICES	000000022733989	72,543.79	GAXI-2160000-000000282207-1	154	01	0	90870	0	11100	10000	4310	2160000	431.17
AMAZON CAPITAL SERVICES	000000022733989	72,543.79	GAXI-2030000-000000282185-1	133	01	0	65000	0	57602	11100	4310	2030000	56.68
AMAZON CAPITAL SERVICES	000000022733989	72,543.79	GAXI-2010000-000000282179-1	127	01	0	67700	1	11100	10000	4310	2010000	388.76
AMAZON CAPITAL SERVICES	000000022746725	1,766.39	GAXI-7440000-000000282741-1	3	01	0	95640	0	11100	10000	4310	7440000	30.84
AMAZON CAPITAL SERVICES	000000022728871	68,038.40	GAXI-7440000-000000281782-1	121	01	0	95640	0	11100	10000	4310	7440000	119.73
AMAZON CAPITAL SERVICES	000000022728871	68,038.40	GAXI-7460000-000000281846-1	193	01	0	90202	0	11100	10000	4310	7460000	214.82
AMAZON CAPITAL SERVICES	000000022733989	72,543.79	GAXI-2030000-000000282104-1	60	01	0	67700	1	11100	10000	4310	2030000	16.45
AMAZON CAPITAL SERVICES	000000022733989	72,543.79	GAXI-2010000-000000282093-1	49	01	0	30100	2	11100	10000	4310	2010000	39.68
AMAZON CAPITAL SERVICES	000000022733989	72,543.79	GAXI-2130000-000000282084-1	37	01	0	00000	0	11100	10000	4310	2130000	87.24
AMAZON CAPITAL SERVICES	000000022733989	72,543.79	GAXI-2150000-000000282073-1	26	01	0	42030	1	47600	10000	4310	2150000	105.21
AMAZON CAPITAL SERVICES	000000022733989	72,543.79	GAXI-2150000-000000282069-1	22	01	0	42010	1	47600	10000	4310	2150000	233.91
AMAZON CAPITAL SERVICES	000000022736648	58,306.94	GAXI-7420000-000000282438-1	133	01	0	63000	0	11100	10000	4310	7420000	53.49
AMAZON CAPITAL SERVICES	000000022736648	58,306.94	GAXI-2150000-000000282421-1	112	01	0	90870	0	11100	10000	4310	2150000	199.73
AMAZON CAPITAL SERVICES	000000022728871	68,038.40	GAXI-5330000-000000281825-1	168	01	0	65000	0	57602	11100	4310	5330000	-66.29
AMB GROUP INC.	000000022744260	2,450.00	GAXI-5330000-000000282650-1	1	11	0	63910	0	41100	81100	5631	5330000	2,450.00
AMERGIS HEALTHCARE STAFFINC, INC. (EIN: 83-2976157	000000022749198	132,030.68	GAXI-7440000-000000282680-1	1	01	0	65000	0	57601	11804	5810	7440000	7,098.00
AMERGIS HEALTHCARE STAFFINC, INC. (EIN: 83-2976157	000000022749198	132,030.68	GAXI-7440000-000000282681-1	2	01	0	65000	0	57601	11804	5810	7440000	378.00
AMERGIS HEALTHCARE STAFFINC, INC. (EIN: 83-2976157	000000022749198	132,030.68	GAXI-7440000-000000282682-1	3	01	0	65000	0	57601	11804	5810	7440000	7,020.00
AMERGIS HEALTHCARE STAFFINC, INC. (EIN: 83-2976157	000000022749198	132,030.68	GAXI-7440000-000000282683-1	4	01	0	65000	0	57601	11804	5810	7440000	6,864.00
AMERGIS HEALTHCARE STAFFINC, INC. (EIN: 83-2976157	000000022749198	132,030.68	GAXI-7440000-000000282684-1	5	01	0	65000	0	57601	11804	5810	7440000	5,980.00
AMERGIS HEALTHCARE STAFFINC, INC. (EIN: 83-2976157	000000022749198	132,030.68	GAXI-7440000-000000282685-1	6	01	0	65000	0	57601	11804	5810	7440000	6,724.64
AMERGIS HEALTHCARE STAFFINC, INC. (EIN: 83-2976157	000000022749198	132,030.68	GAXI-7440000-000000282686-1	7	01	0	65000	0	57601	11804	5810	7440000	6,848.40
AMERGIS HEALTHCARE STAFFINC, INC. (EIN: 83-2976157	000000022749198	132,030.68	GAXI-7440000-000000282687-1	8	01	0	65000	0	57601	11804	5810	7440000	12,818.00
AMERGIS HEALTHCARE STAFFINC, INC. (EIN: 83-2976157	000000022749198	132,030.68	GAXI-7440000-000000282688-1	9	01	0	65000	0	57601	11804	5810	7440000	6,046.04
AMERGIS HEALTHCARE STAFFINC, INC. (EIN: 83-2976157	000000022749198	132,030.68	GAXI-7440000-000000282690-1	10	01	0	65000	0	57601	11804	5810	7440000	7,098.00
AMERGIS HEALTHCARE STAFFINC, INC. (EIN: 83-2976157	000000022749198	132,030.68	GAXI-7440000-000000282691-1	11	01	0	65000	0	57601	11804	5810	7440000	6,907.16
AMERGIS HEALTHCARE STAFFINC, INC. (EIN: 83-2976157	000000022749198	132,030.68	GAXI-7440000-000000282692-1	12	01	0	65000	0	57601	11804	5810	7440000	4,047.96
AMERGIS HEALTHCARE STAFFINC, INC. (EIN: 83-2976157	000000022749198	132,030.68	GAXI-7440000-000000282693-1	13	01	0	65000	0	57601	11804	5810	7440000	5,929.04
AMERGIS HEALTHCARE STAFFINC, INC. (EIN: 83-2976157	000000022749198	132,030.68	GAXI-7440000-000000282694-1	14	01	0	65000	0	57601	11804	5810	7440000	7,089.16
AMERGIS HEALTHCARE STAFFINC, INC. (EIN: 83-2976157	000000022749198	132,030.68	GAXI-7440000-000000282695-1	15	01	0	65000	0	57601	11804	5810	7440000	5,103.00
AMERGIS HEALTHCARE STAFFINC, INC. (EIN: 83-2976157	000000022749198	132,030.68	GAXI-7440000-000000282696-1	16	01	0	65000	0	57601	11804	5810	7440000	7,037.16

Vendor Name	Warrant Number	Warrant Amount	Payment Doc ID	Accounting Line No.	Fund	Sub-Fund	Resource	Project Year	Goal/Categorical	Function/Activity	Object	School Location/Dept	Line Amount
AMERGIS HEALTHCARE STAFFINC, INC. (EIN: 83-2976157	000000022749198	132,030.68	GAXI-7440000-000000282697-1	17	01	0	65000	0	57601	11804	5810	7440000	6,885.32
AMERGIS HEALTHCARE STAFFINC, INC. (EIN: 83-2976157	000000022749198	132,030.68	GAXI-7440000-000000282698-1	18	01	0	65000	0	57601	11804	5810	7440000	5,724.16
AMERGIS HEALTHCARE STAFFINC, INC. (EIN: 83-2976157	000000022749198	132,030.68	GAXI-7440000-000000282699-1	19	01	0	65000	0	57601	11804	5810	7440000	16,432.64
AMERICAN FIDELITY	000000022739031	55,748.18	GAXI-0000000-000000282583-1	1	76	0	00000	0	00000	00000	9562	0000000	55,748.18
AMERICAN FIDELITY ASSURANCE COMPANY	000000022739032	22,670.00	GAXI-0000000-000000282582-1	1	76	0	00000	0	00000	00000	9562	0000000	22,670.00
AMS.NET	000000022736649	1,200.00	GAXI-7730000-000000281609-1	1	01	0	00000	0	00000	77000	6550	7730000	1,200.00
AMTECH ELEVATOR SERVICES	000000022731257	6,810.00	GAXI-7520000-000000282029-1	1	01	0	81500	0	00000	81100	5631	7520000	6,810.00
AMY CHOI	000000022749199	36.54	GAXI-7720000-000000282846-1	1	01	0	00000	0	00000	31400	5210	7720000	36.54
AMY FUHR	000000022765987	62.51	GAXI-3210000-000000283573-1	1	01	0	00000	0	11100	10000	4310	3210000	62.51
AMY PROSSER	000000022749200	76.56	GAXI-7720000-000000282842-1	1	01	0	00000	0	11100	10000	5210	7720000	76.56
ANA MARIA MOEN	202605260584014	807.05	GAXI-0000000-000000283283-1	1	67	0	00000	0	00000	60000	5810	0000000	807.05
ANNA MARTIROSYAN	202605260584004	708.76	GAXI-0000000-000000283275-1	1	67	0	00000	0	00000	60000	5810	0000000	708.76
ANNE ELIZABETH MORRISON	000000022741668	4,500.00	GAXI-2020000-000000282588-1	1	01	0	67700	1	11100	10000	5810	2020000	4,500.00
ANNE JACKSON	000000022749201	35.09	GAXI-7720000-000000282845-1	1	01	0	00000	0	00000	31400	5210	7720000	35.09
ANNETTE RIOJAS	202605270584502	807.05	GAXI-0000000-000000283304-1	1	67	0	00000	0	00000	60000	5810	0000000	807.05
ANNIE CAVANAUGH	000000022741669	309.34	GAXI-4310000-000000282594-1	1	01	0	00000	0	17006	10000	4310	4310000	309.34
AREVAHAD AVANESSIAN	202605260583964	319.29	GAXI-0000000-000000283127-1	1	67	0	00000	0	00000	60000	5810	0000000	319.29
AREY JONES EDUCATIONAL SOLUTIONS	000000022771248	3,080.96	GAXI-7440000-000000283593-1	1	01	0	58100	0	57602	11100	4450	7440000	3,073.33
AREY JONES EDUCATIONAL SOLUTIONS	000000022771248	3,080.96	GAXI-7440000-000000283593-1	2	01	0	58100	0	57602	11100	4310	7440000	7.63
AREY JONES EDUCATIONAL SOLUTIONS	000000022746726	580.66	GAXI-7460000-000000282626-1	1	01	0	90202	0	11100	10000	4310	7460000	521.16
AREY JONES EDUCATIONAL SOLUTIONS	000000022746726	580.66	GAXI-7460000-000000282626-1	2	01	0	90202	0	11100	10000	5840	7460000	59.50
ARMENIAN KIDS CLUB, INC.	000000022731258	40.63	GAXI-2140000-000000281753-1	1	01	0	42010	1	47600	10000	4210	2140000	40.63
ARPINE SHAZARIAN	000000022765988	49.71	GAXI-2030000-000000283575-1	1	01	0	00000	0	11100	10000	4310	2030000	49.71
ARROW RESTAURANT EQUIPMENT	000000022731259	1,511.75	GAXI-7490000-000000282005-1	1	13	0	53100	0	00000	37000	4310	7490000	1,511.75
ARROW RESTAURANT EQUIPMENT	000000022739033	25,702.30	GAXI-7490000-000000282004-1	1	13	0	53100	0	00000	37000	6510	7490000	25,702.30
ASSESSMENT, CONSULTATION & TREATEMENT, INC.	000000022739034	2,500.00	GAXI-7440000-000000282531-1	1	01	0	65000	0	57602	11900	5850	7440000	2,500.00
AT&T	000000022744261	11,488.03	GAXI-7400000-000000282646-1	1	01	0	00000	0	00000	72000	5910	7400000	11,488.03
AT&T	000000022753986	120.09	GAXI-7400000-000000283021-1	1	01	0	00000	0	00000	72000	5910	7400000	18.56
AT&T	000000022753986	120.09	GAXI-7400000-000000283022-1	2	01	0	00000	0	00000	72000	5910	7400000	101.53
AUTISM BEHAVIOR INTERVENTION INC	000000022749202	22,213.85	GAXI-7440000-000000282603-1	1	01	0	65000	0	57601	11804	5810	7440000	8,893.47
AUTISM BEHAVIOR INTERVENTION INC	000000022749202	22,213.85	GAXI-7440000-000000282604-1	2	01	0	65000	0	57601	11804	5810	7440000	5,045.10
AUTISM BEHAVIOR INTERVENTION INC	000000022749202	22,213.85	GAXI-7440000-000000282605-1	3	01	0	65000	0	57601	11804	5810	7440000	8,275.28
AUTOZONE	000000022744262	40.20	GAXI-7520000-000000282643-1	1	01	0	81500	0	00000	81100	4360	7520000	405.56
AUTOZONE	000000022744262	40.20	GAXI-7520000-000000282644-1	2	01	0	81500	0	00000	81100	4360	7520000	-182.68
AUTOZONE	000000022744262	40.20	GAXI-7520000-000000282645-1	3	01	0	81500	0	00000	81100	4360	7520000	-182.68
AVANTGUARD MONITORING CENTERS, LLC	000000022744263	366.91	GAXI-7520000-000000282648-1	1	01	0	81500	0	00000	81100	5850	7520000	366.91
AYA HEALTHCARE INC.	000000022733990	23,887.50	GAXI-7440000-000000282040-1	2	01	0	65000	0	57601	11804	5810	7440000	11,917.50
AYA HEALTHCARE INC.	000000022733990	23,887.50	GAXI-7440000-000000282039-1	1	01	0	65000	0	57601	11804	5810	7440000	11,970.00
AYA HEALTHCARE INC.	000000022728872	10,018.05	GAXI-7440000-000000281678-1	1	01	0	65000	0	57601	11804	5810	7440000	10,018.05
AYA HEALTHCARE INC.	000000022739035	10,607.10	GAXI-7440000-000000282476-1	1	01	0	65000	0	57601	11804	5810	7440000	10,607.10
AYA HEALTHCARE INC.	000000022756391	32,331.60	GAXI-7440000-000000283055-1	2	01	0	65000	0	57601	11804	5810	7440000	10,229.10
AYA HEALTHCARE INC.	000000022756391	32,331.60	GAXI-7440000-000000283054-1	1	01	0	65000	0	57601	11804	5810	7440000	11,760.00
AYA HEALTHCARE INC.	000000022756391	32,331.60	GAXI-7440000-000000283056-1	3	01	0	65000	0	57601	11804	5810	7440000	10,342.50
AYA HEALTHCARE INC.	000000022761245	20,489.70	GAXI-7440000-000000283387-1	1	01	0	65000	0	57601	11804	5810	7440000	7,010.85
AYA HEALTHCARE INC.	000000022761245	20,489.70	GAXI-7440000-000000283389-1	2	01	0	65000	0	57601	11804	5810	7440000	6,653.85
AYA HEALTHCARE INC.	000000022761245	20,489.70	GAXI-7440000-000000283390-1	3	01	0	65000	0	57601	11804	5810	7440000	6,825.00
BAD WOLF PRESS	000000022761246	45.00	GAXI-2150000-000000283458-1	1	01	0	00000	0	11100	10000	4310	2150000	45.00
BAND TODAY, LLC	000000022771249	730.00	GAXI-4310000-000000283649-1	1	01	0	00000	0	17006	10000	4310	4310000	730.00
BARBARA DEVALL	202605270584507	807.05	GAXI-0000000-000000283201-1	1	67	0	00000	0	00000	60000	5810	0000000	807.05
BARBARA DEVALL	202604300574011	807.05	GAXI-0000000-000000281211-1	1	67	0	00000	0	00000	60000	5810	0000000	807.05
BARNES AND NOBLE INC	000000022771250	4,525.90	GAXI-3200000-000000283841-1	2	01	0	00000	0	15000	10000	4310	3200000	2,379.41
BARNES AND NOBLE INC	000000022771250	4,525.90	GAXI-7420000-000000283597-1	1	01	0	01500	0	11116	10000	4210	7420000	2,146.49
BEACON SALES ACQUISITION, INC.	000000022724217	581.94	GAXI-7520000-000000281631-1	1	01	0	81500	0	00000	81100	4310	7520000	581.94
BECKER & MIYAMOTO, INC. LICENSED LAND SURVERYORS	000000022744264	24,260.00	GAXI-2060000-000000281345-1	1	21	0	00000	0	00000	85000	6250	2060000	24,260.00
BEHAVIOR AND EDUCATION INC	000000022758861	9,865.37	GAXI-7440000-000000283210-1	1	01	0	65000	0	57601	11804	5810	7440000	9,209.37
BEHAVIOR AND EDUCATION INC	000000022758861	9,865.37	GAXI-7440000-000000283211-1	2	01	0	65000	0	57601	11804	5810	7440000	656.00
BENCHMARK EDUCATION COMPANY	000000022736650	398.13	GAXI-2090000-000000282517-1	1	01	0	42030	1	47600	10000	4310	2090000	398.13
BENJAMIN MARSH	000000022741670	739.06	GAXI-7420000-000000282596-1	1	01	0	00000	0	11100	10000	5220	7420000	739.06
BEVERLY BUSSARD	202605260584019	1,248.29	GAXI-0000000-000000283141-1	1	67	0	00000	0	00000	60000	5810	0000000	1,248.29

Vendor Name	Warrant Number	Warrant Amount	Payment Doc ID	Accounting Line No.	Fund	Sub-Fund	Resource	Project Year	Goal/Categorical	Function/Activity	Object	School Location/Dept	Line Amount
BIDDINGOWL.COM, LLC	000000022736651	559.42	GAXI-2150000-000000282536-1	1	01	0	90870	0	11100	10000	5840	2150000	559.42
BILL FERRELL CO.	000000022765989	4,036.50	GAXI-4320000-000000282727-1	1	01	0	90216	0	11100	81100	5611	4320000	4,036.50
BORIS MARKOSIAN	000000022728873	500.00	GAXI-3220000-000000281388-1	1	01	0	90704	0	17006	10000	5630	3220000	448.23
BORIS MARKOSIAN	000000022728873	500.00	GAXI-3220000-000000281388-1	2	01	0	67700	1	17006	10000	5630	3220000	51.77
BORIS MARKOSIAN	000000022746727	750.00	GAXI-3220000-000000282711-1	1	01	0	90904	0	17006	41002	4310	3220000	750.00
BOYS & GIRLS CLUB OF BURBANK	000000022749203	102,750.70	GAXI-7420000-000000282740-1	2	01	0	26000	0	11100	10000	5850	7420000	55,071.30
BOYS & GIRLS CLUB OF BURBANK	000000022749203	102,750.70	GAXI-7420000-000000282739-1	1	01	0	26000	0	11100	10000	5850	7420000	47,679.40
BOYS & GIRLS CLUB OF BURBANK	000000022765990	267,308.15	GAXI-7420000-000000283534-1	8	01	0	26000	0	11100	10000	5850	7420000	35,179.83
BOYS & GIRLS CLUB OF BURBANK	000000022765990	267,308.15	GAXI-7420000-000000283529-1	3	01	0	26000	0	11100	10000	5850	7420000	36,000.00
BOYS & GIRLS CLUB OF BURBANK	000000022765990	267,308.15	GAXI-7420000-000000283533-1	7	01	0	26000	0	11100	10000	5850	7420000	35,179.83
BOYS & GIRLS CLUB OF BURBANK	000000022765990	267,308.15	GAXI-7420000-000000283530-1	4	01	0	26000	0	11100	10000	5850	7420000	61,670.00
BOYS & GIRLS CLUB OF BURBANK	000000022765990	267,308.15	GAXI-7420000-000000283527-1	1	01	0	26000	0	11100	10000	5850	7420000	23,240.38
BOYS & GIRLS CLUB OF BURBANK	000000022765990	267,308.15	GAXI-7420000-000000283531-1	5	01	0	26000	0	11100	10000	5850	7420000	19,675.00
BOYS & GIRLS CLUB OF BURBANK	000000022765990	267,308.15	GAXI-7420000-000000283532-1	6	01	0	26000	0	11100	10000	5850	7420000	9,493.11
BOYS & GIRLS CLUB OF BURBANK	000000022765990	267,308.15	GAXI-7420000-000000283528-1	2	01	0	26000	0	11100	10000	5850	7420000	46,870.00
BRASS MAVENS LLC	000000022728874	440.00	GAXI-7460000-000000281759-1	1	01	0	00000	0	17000	10000	4381	7460000	440.00
BRIDGET L HIGHFILL	202605260584015	807.05	GAXI-0000000-000000283248-1	1	67	0	00000	0	00000	60000	5810	0000000	807.05
BRINK'S INCORPORATED	000000022733991	240.14	GAXI-7470000-000000282045-1	3	01	0	00000	0	00000	72000	5850	7470000	5,237.46
BRINK'S INCORPORATED	000000022733991	240.14	GAXI-7470000-000000282043-1	1	01	0	00000	0	00000	72000	5850	7470000	-5,237.46
BRINK'S INCORPORATED	000000022733991	240.14	GAXI-7470000-000000282044-1	2	01	0	00000	0	00000	72000	5850	7470000	240.14
BRITTANY MINDEL	000000022749204	16.80	GAXI-7440000-000000282844-1	1	01	0	65000	0	57602	11200	5210	7440000	16.80
BROIDY, HEATHER	000000022765991	1,015.84	GAXI-0000000-000000283137-1	1	67	0	00000	0	00000	60000	5810	0000000	1,015.84
BUDLONG AND ASSOCIATES, INC.	000000022753987	67,000.00	GAXI-7400000-000000283027-1	1	21	0	00000	0	00000	85000	5631	7400000	67,000.00
BURBANK IRRIGATION SUPPLY	000000022744265	561.62	GAXI-7520000-000000282649-1	1	01	0	00100	0	00000	82200	4310	7520000	466.62
BURBANK IRRIGATION SUPPLY	000000022744265	561.62	GAXI-7520000-000000282649-1	2	01	0	81500	0	00000	82200	5631	7520000	95.00
BURBANK IRRIGATION SUPPLY	000000022751655	124.84	GAXI-7520000-000000282916-1	1	01	0	00100	0	00000	82200	4310	7520000	124.84
BURBANK OPTOMETRIC CENTER, INC.	000000022756392	525.00	GAXI-7440000-000000283048-1	1	01	0	65000	0	57602	11900	5850	7440000	525.00
BURBANK TEACHERS ASSOCIATION	000000022733992	85,828.18	GAXI-0000000-000000282282-1	1	76	0	00000	0	00000	00000	9581	0000000	85,828.18
BURBANK TEACHERS ASSOCIATION	000000022756393	2,099.48	GAXI-0000000-000000283105-1	1	76	0	00000	0	00000	00000	9581	0000000	2,099.48
BURBANK WATER AND POWER	000000022761247	267,168.36	GAXI-7400000-000000283484-1	13	01	0	00000	0	00000	82000	5520	7400000	169,169.77
BURBANK WATER AND POWER	000000022761247	267,168.36	GAXI-7400000-000000283484-1	14	01	0	00000	0	00000	82000	5530	7400000	25,993.45
BURBANK WATER AND POWER	000000022761247	267,168.36	GAXI-7400000-000000283484-1	15	01	0	00000	0	00000	82000	5560	7400000	16,393.81
BURBANK WATER AND POWER	000000022761247	267,168.36	GAXI-7400000-000000283488-1	16	01	0	00000	0	00000	82000	5530	7400000	63.63
BURBANK WATER AND POWER	000000022765992	55,754.87	GAXI-7400000-000000283517-1	8	01	0	00000	0	00000	82000	5520	7400000	18,016.07
BURBANK WATER AND POWER	000000022765992	55,754.87	GAXI-7400000-000000283517-1	9	01	0	00000	0	00000	82000	5530	7400000	3,402.31
BURBANK WATER AND POWER	000000022765992	55,754.87	GAXI-7400000-000000283517-1	10	01	0	00000	0	00000	82000	5560	7400000	1,972.78
BURBANK WATER AND POWER	000000022761247	267,168.36	GAXI-7400000-000000283494-1	17	01	0	00000	0	00000	82000	5520	7400000	6,196.88
BURBANK WATER AND POWER	000000022761247	267,168.36	GAXI-7400000-000000283494-1	18	01	0	00000	0	00000	82000	5530	7400000	743.89
BURBANK WATER AND POWER	000000022761247	267,168.36	GAXI-7400000-000000283478-1	1	01	0	00000	0	00000	82000	5520	7400000	6,976.51
BURBANK WATER AND POWER	000000022761247	267,168.36	GAXI-7400000-000000283478-1	2	01	0	00000	0	00000	82000	5530	7400000	832.67
BURBANK WATER AND POWER	000000022761247	267,168.36	GAXI-7400000-000000283478-1	3	01	0	00000	0	00000	82000	5560	7400000	1,614.40
BURBANK WATER AND POWER	000000022761247	267,168.36	GAXI-7400000-000000283481-1	4	01	0	00000	0	00000	82000	5520	7400000	6,251.77
BURBANK WATER AND POWER	000000022761247	267,168.36	GAXI-7400000-000000283481-1	5	01	0	00000	0	00000	82000	5530	7400000	805.36
BURBANK WATER AND POWER	000000022761247	267,168.36	GAXI-7400000-000000283481-1	6	01	0	00000	0	00000	82000	5560	7400000	1,393.30
BURBANK WATER AND POWER	000000022761247	267,168.36	GAXI-7400000-000000283496-1	19	01	0	00000	0	00000	82000	5520	7400000	521.36
BURBANK WATER AND POWER	000000022761247	267,168.36	GAXI-7400000-000000283496-1	20	01	0	00000	0	00000	82000	5530	7400000	111.77
BURBANK WATER AND POWER	000000022761247	267,168.36	GAXI-7400000-000000283497-1	21	01	0	00000	0	00000	82000	5520	7400000	370.67
BURBANK WATER AND POWER	000000022761247	267,168.36	GAXI-7400000-000000283482-1	7	01	0	00000	0	00000	82000	5520	7400000	6,327.47
BURBANK WATER AND POWER	000000022761247	267,168.36	GAXI-7400000-000000283482-1	8	01	0	00000	0	00000	82000	5530	7400000	288.90
BURBANK WATER AND POWER	000000022761247	267,168.36	GAXI-7400000-000000283482-1	9	01	0	00000	0	00000	82000	5560	7400000	1,109.44
BURBANK WATER AND POWER	000000022761247	267,168.36	GAXI-7400000-000000283498-1	22	01	0	00000	0	00000	82000	5530	7400000	159.70
BURBANK WATER AND POWER	000000022761247	267,168.36	GAXI-7400000-000000283498-1	23	01	0	00000	0	00000	82000	5560	7400000	915.46
BURBANK WATER AND POWER	000000022761247	267,168.36	GAXI-7400000-000000283500-1	24	01	0	00000	0	00000	82000	5530	7400000	18.70
BURBANK WATER AND POWER	000000022761247	267,168.36	GAXI-7400000-000000283500-1	25	01	0	00000	0	00000	82000	5560	7400000	4,259.24
BURBANK WATER AND POWER	000000022761247	267,168.36	GAXI-7400000-000000283504-1	26	01	0	00000	0	00000	82000	5520	7400000	4,973.36
BURBANK WATER AND POWER	000000022761247	267,168.36	GAXI-7400000-000000283504-1	27	01	0	00000	0	00000	82000	5530	7400000	1,912.97
BURBANK WATER AND POWER	000000022761247	267,168.36	GAXI-7400000-000000283504-1	28	01	0	00000	0	00000	82000	5560	7400000	1,127.97
BURBANK WATER AND POWER	000000022753988	27.87	GAXI-7400000-000000283023-1	1	01	0	00000	0	00000	82000	5530	7400000	27.87
BURBANK WATER AND POWER	000000022761247	267,168.36	GAXI-7400000-000000283505-1	29	01	0	00000	0	00000	82000	5530	7400000	96.93

Vendor Name	Warrant Number	Warrant Amount	Payment Doc ID	Accounting Line No.	Fund	Sub-Fund	Resource	Project Year	Goal/Categorical	Function/Activity	Object	School Location/Dept	Line Amount
BURBANK WATER AND POWER	000000022761247	267,168.36	GAXI-7400000-000000283506-1	30	01	0	00000	0	00000	82000	5530	7400000	24.87
BURBANK WATER AND POWER	000000022761247	267,168.36	GAXI-7400000-000000283483-1	10	01	0	00000	0	00000	82000	5520	7400000	5,834.53
BURBANK WATER AND POWER	000000022761247	267,168.36	GAXI-7400000-000000283483-1	11	01	0	00000	0	00000	82000	5530	7400000	1,201.04
BURBANK WATER AND POWER	000000022761247	267,168.36	GAXI-7400000-000000283483-1	12	01	0	00000	0	00000	82000	5560	7400000	1,478.54
BURBANK WATER AND POWER	000000022765992	55,754.87	GAXI-7400000-000000283514-1	1	01	0	00000	0	00000	82000	5530	7400000	238.72
BURBANK WATER AND POWER	000000022765992	55,754.87	GAXI-7400000-000000283515-1	2	01	0	00000	0	00000	82000	5520	7400000	3,278.21
BURBANK WATER AND POWER	000000022765992	55,754.87	GAXI-7400000-000000283515-1	3	01	0	00000	0	00000	82000	5530	7400000	863.91
BURBANK WATER AND POWER	000000022765992	55,754.87	GAXI-7400000-000000283515-1	4	01	0	00000	0	00000	82000	5560	7400000	591.42
BURBANK WATER AND POWER	000000022765992	55,754.87	GAXI-7400000-000000283518-1	11	01	0	00000	0	00000	82000	5520	7400000	6,073.23
BURBANK WATER AND POWER	000000022765992	55,754.87	GAXI-7400000-000000283518-1	12	01	0	00000	0	00000	82000	5530	7400000	6,116.32
BURBANK WATER AND POWER	000000022765992	55,754.87	GAXI-7400000-000000283518-1	13	01	0	00000	0	00000	82000	5560	7400000	6,393.20
BURBANK WATER AND POWER	000000022765992	55,754.87	GAXI-7400000-000000283516-1	5	01	0	00000	0	00000	82000	5520	7400000	6,549.60
BURBANK WATER AND POWER	000000022765992	55,754.87	GAXI-7400000-000000283516-1	6	01	0	00000	0	00000	82000	5530	7400000	916.26
BURBANK WATER AND POWER	000000022765992	55,754.87	GAXI-7400000-000000283516-1	7	01	0	00000	0	00000	82000	5560	7400000	1,342.84
BUREAU OF EDUCATION & RESEARCH	000000022771251	325.00	GAXI-6870000-000000283033-1	1	01	0	40350	1	11100	10000	5220	6870000	325.00
BUREAU OF EDUCATION & RESEARCH	000000022756394	295.00	GAXI-7440000-000000283034-1	1	01	0	90350	0	50010	21000	5220	7440000	295.00
CALIFORNIA ASSOCIATION FOR BILINGUAL EDUCATION	000000022746728	965.00	GAXI-3210000-000000282689-1	1	01	0	42030	1	47600	10000	5220	3210000	965.00
CALIFORNIA DEPARTMENT OF TAX AND FEE	000000022724218	4,061.39	GAXI-0000000-000000281626-1	1	01	0	00000	0	00000	00000	9552	0000000	4,061.39
CALIFORNIA PAVING & GRADING CO INC	000000022753989	2,950.00	GAXI-7520000-000000283017-1	1	01	0	81500	0	00000	81100	5631	7520000	2,950.00
CALIFORNIA SCHOOL EMPLOYEES	000000022733993	62.82	GAXI-0000000-000000282281-1	1	76	0	00000	0	00000	00000	9517	0000000	62.82
CALIFORNIA SCHOOL EMPLOYEES	000000022756395	21,723.42	GAXI-0000000-000000283104-1	1	76	0	00000	0	00000	00000	9517	0000000	21,723.42
CALPERS 457 PLAN	000000022733994	5,725.00	GAXI-0000000-000000282123-1	1	76	0	00000	0	00000	00000	9518	0000000	4,025.00
CALPERS 457 PLAN	000000022733994	5,725.00	GAXI-0000000-000000282124-1	2	76	0	00000	0	00000	00000	9518	0000000	1,700.00
CALPERS 457 PLAN	000000022739036	7,800.00	GAXI-0000000-000000282579-1	1	76	0	00000	0	00000	00000	9518	0000000	7,800.00
CANON FINANCIAL SERVICES, INC.	000000022765993	15,174.94	GAXI-7400000-000000282875-1	1	01	0	00000	0	00000	72000	5611	7400000	13,144.22
CANON FINANCIAL SERVICES, INC.	000000022728875	3,978.68	GAXI-7400000-000000281873-1	1	01	0	00000	0	00000	72000	5631	7400000	3,978.68
CANON FINANCIAL SERVICES, INC.	000000022765993	15,174.94	GAXI-7400000-000000283520-1	2	01	0	00000	0	00000	72000	5631	7400000	2,030.72
CARDIAC DIRECT	000000022751656	14,359.06	GAXI-5330000-000000282963-1	3	11	0	63910	0	41104	10000	4410	5330000	10,766.26
CARDIAC DIRECT	000000022751656	14,359.06	GAXI-5330000-000000282963-1	4	11	0	63910	0	41104	10000	4310	5330000	1,607.49
CARDIAC DIRECT	000000022751656	14,359.06	GAXI-5330000-000000282954-1	1	11	0	63910	0	41104	10000	4410	5330000	1,727.40
CARDIAC DIRECT	000000022751656	14,359.06	GAXI-5330000-000000282954-1	2	11	0	63910	0	41104	10000	4310	5330000	257.91
CARI KNIGHT	000000022765994	149.99	GAXI-3200000-000000283564-1	1	01	0	00000	0	11100	10000	5840	3200000	149.99
CARIN L WANTLAND	202605270584511	1,269.81	GAXI-0000000-000000283353-1	1	67	0	00000	0	00000	60000	5810	0000000	1,269.81
CAROL H ROWSEY	202605270584486	503.50	GAXI-0000000-000000283310-1	1	67	0	00000	0	00000	60000	5810	0000000	503.50
CAROLINA BIOLOGICAL SUPPLY CO	000000022771252	246.40	GAXI-4310000-000000283617-1	1	01	0	00000	0	13400	10000	4310	4310000	221.52
CAROLINA BIOLOGICAL SUPPLY CO	000000022771252	246.40	GAXI-4310000-000000283618-1	2	01	0	00000	0	13400	10000	4310	4310000	24.88
CAROLINA BIOLOGICAL SUPPLY CO	000000022746729	435.55	GAXI-4320000-000000282730-1	1	01	0	00000	0	13400	10000	4310	4320000	70.29
CAROLINA BIOLOGICAL SUPPLY CO	000000022746729	435.55	GAXI-4320000-000000282731-1	2	01	0	00000	0	13400	10000	4310	4320000	96.10
CAROLINA BIOLOGICAL SUPPLY CO	000000022746729	435.55	GAXI-4320000-000000282732-1	3	01	0	00000	0	13400	10000	4310	4320000	269.16
CAROLYN PERLSTEIN	202605270584506	1,269.81	GAXI-0000000-000000283299-1	1	67	0	00000	0	00000	60000	5810	0000000	1,269.81
CARREON NURSERY	000000022771253	2,622.17	GAXI-3220000-000000283819-1	1	01	0	90904	0	11100	10000	4310	3220000	2,000.00
CARREON NURSERY	000000022771253	2,622.17	GAXI-3220000-000000283819-1	2	01	0	00000	0	11100	10000	4310	3220000	622.17
CARYN S TOMER	202605040575214	600.00	GAXI-7440000-000000281677-1	1	01	0	65000	0	57602	11900	5850	7440000	600.00
CARYN S TOMER	202605270584503	1,295.34	GAXI-0000000-000000283344-1	1	67	0	00000	0	00000	60000	5810	0000000	1,295.34
CATALINA PAINTS - BURBANK	000000022728876	174.20	GAXI-7520000-000000281937-1	1	01	0	81500	0	00000	81100	4310	7520000	174.20
CATALINA PAINTS - BURBANK	000000022751657	101.77	GAXI-7520000-000000282917-1	1	01	0	81500	0	00000	81100	4310	7520000	90.76
CATALINA PAINTS - BURBANK	000000022751657	101.77	GAXI-7520000-000000282918-1	2	01	0	81500	0	00000	81100	4310	7520000	11.01
CATALINA PAINTS - BURBANK	000000022771254	537.83	GAXI-7520000-000000283665-1	1	01	0	81500	0	00000	81100	4310	7520000	224.97
CATALINA PAINTS - BURBANK	000000022771254	537.83	GAXI-7520000-000000283668-1	2	01	0	81500	0	00000	81100	4310	7520000	66.26
CATALINA PAINTS - BURBANK	000000022771254	537.83	GAXI-7520000-000000283669-1	3	01	0	81500	0	00000	81100	4310	7520000	246.60
CATHY MARCY	202605260583965	807.05	GAXI-0000000-000000283271-1	1	67	0	00000	0	00000	60000	5810	0000000	807.05
CDW GOVERNMENT	000000022746730	4,731.54	GAXI-3220000-000000282719-1	1	01	0	00000	0	11100	10000	4310	3220000	586.11
CDW GOVERNMENT	000000022746730	4,731.54	GAXI-3220000-000000282721-1	2	01	0	30100	2	11100	10000	4310	3220000	4,145.43
CHERIE WESCOTT	202605270584528	807.05	GAXI-0000000-000000283354-1	1	67	0	00000	0	00000	60000	5810	0000000	807.05
CHERIE WESCOTT	202604300574019	807.05	GAXI-0000000-000000281599-1	1	67	0	00000	0	00000	60000	5810	0000000	807.05
CHILDCARE CAREERS LLC	000000022749205	32,471.17	GAXI-7540000-000000282759-1	7	12	0	90602	0	11100	10000	5850	7540000	1,300.50
CHILDCARE CAREERS LLC	000000022749205	32,471.17	GAXI-7540000-000000282753-1	1	12	0	90602	0	11100	10000	5850	7540000	855.00
CHILDCARE CAREERS LLC	000000022749205	32,471.17	GAXI-7540000-000000282754-1	2	12	0	90602	0	11100	10000	5850	7540000	931.00
CHILDCARE CAREERS LLC	000000022749205	32,471.17	GAXI-7540000-000000282755-1	3	12	0	90602	0	11100	10000	5850	7540000	940.50

Vendor Name	Warrant Number	Warrant Amount	Payment Doc ID	Accounting Line No.	Fund	Sub-Fund	Resource	Project Year	Goal/Categorical	Function/Activity	Object	School Location/Dept	Line Amount
CHILDCARE CAREERS LLC	000000022749205	32,471.17	GAXI-7540000-000000282756-1	4	12	0	90602	0	11100	10000	5850	7540000	1,025.00
CHILDCARE CAREERS LLC	000000022749205	32,471.17	GAXI-7540000-000000282757-1	5	12	0	90602	0	11100	10000	5850	7540000	323.00
CHILDCARE CAREERS LLC	000000022749205	32,471.17	GAXI-7540000-000000282758-1	6	12	0	90602	0	11100	10000	5850	7540000	1,560.00
CHILDCARE CAREERS LLC	000000022749205	32,471.17	GAXI-7540000-000000282760-1	8	12	0	90602	0	11100	10000	5850	7540000	888.00
CHILDCARE CAREERS LLC	000000022749205	32,471.17	GAXI-7540000-000000282761-1	9	12	0	90602	0	11100	10000	5850	7540000	2,302.50
CHILDCARE CAREERS LLC	000000022749205	32,471.17	GAXI-7540000-000000282762-1	10	12	0	90602	0	11100	10000	5850	7540000	1,448.00
CHILDCARE CAREERS LLC	000000022749205	32,471.17	GAXI-7540000-000000282763-1	11	12	0	90602	0	11100	10000	5850	7540000	855.00
CHILDCARE CAREERS LLC	000000022749205	32,471.17	GAXI-7540000-000000282764-1	12	12	0	90602	0	11100	10000	5850	7540000	664.00
CHILDCARE CAREERS LLC	000000022749205	32,471.17	GAXI-7540000-000000282765-1	13	12	0	90602	0	11100	10000	5850	7540000	304.00
CHILDCARE CAREERS LLC	000000022749205	32,471.17	GAXI-7540000-000000282766-1	14	12	0	90602	0	11100	10000	5850	7540000	878.00
CHILDCARE CAREERS LLC	000000022749205	32,471.17	GAXI-7540000-000000282767-1	15	12	0	90602	0	11100	10000	5850	7540000	1,812.00
CHILDCARE CAREERS LLC	000000022749205	32,471.17	GAXI-7540000-000000282768-1	16	12	0	90602	0	11100	10000	5850	7540000	855.00
CHILDCARE CAREERS LLC	000000022749205	32,471.17	GAXI-7540000-000000282769-1	17	12	0	90602	0	11100	10000	5850	7540000	1,073.50
CHILDCARE CAREERS LLC	000000022749205	32,471.17	GAXI-7540000-000000282770-1	18	12	0	90602	0	11100	10000	5850	7540000	1,280.00
CHILDCARE CAREERS LLC	000000022749205	32,471.17	GAXI-7540000-000000282771-1	19	12	0	90602	0	11100	10000	5850	7540000	1,707.67
CHILDCARE CAREERS LLC	000000022749205	32,471.17	GAXI-7540000-000000282772-1	20	12	0	90602	0	11100	10000	5850	7540000	1,068.75
CHILDCARE CAREERS LLC	000000022749205	32,471.17	GAXI-7540000-000000282773-1	21	12	0	90602	0	11100	10000	5850	7540000	640.00
CHILDCARE CAREERS LLC	000000022749205	32,471.17	GAXI-7540000-000000282774-1	22	12	0	90602	0	11100	10000	5850	7540000	152.00
CHILDCARE CAREERS LLC	000000022749205	32,471.17	GAXI-7540000-000000282775-1	23	12	0	90602	0	11100	10000	5850	7540000	1,110.00
CHILDCARE CAREERS LLC	000000022749205	32,471.17	GAXI-7540000-000000282776-1	24	12	0	90602	0	11100	10000	5850	7540000	1,624.00
CHILDCARE CAREERS LLC	000000022749205	32,471.17	GAXI-7540000-000000282777-1	25	12	0	90602	0	11100	10000	5850	7540000	722.00
CHILDCARE CAREERS LLC	000000022749205	32,471.17	GAXI-7540000-000000282778-1	26	12	0	90602	0	11100	10000	5850	7540000	576.00
CHILDCARE CAREERS LLC	000000022749205	32,471.17	GAXI-7540000-000000282779-1	27	12	0	90602	0	11100	10000	5850	7540000	1,164.00
CHILDCARE CAREERS LLC	000000022749205	32,471.17	GAXI-7540000-000000282780-1	28	12	0	90602	0	11100	10000	5850	7540000	1,453.50
CHILDCARE CAREERS LLC	000000022749205	32,471.17	GAXI-7540000-000000282781-1	29	12	0	90602	0	11100	10000	5850	7540000	256.00
CHILDCARE CAREERS LLC	000000022749205	32,471.17	GAXI-7540000-000000282782-1	30	12	0	90602	0	11100	10000	5850	7540000	576.00
CHILDCARE CAREERS LLC	000000022749205	32,471.17	GAXI-7540000-000000282784-1	31	12	0	90602	0	11100	10000	5850	7540000	2,126.25
CHRISTINA D'ANDREA	000000022768173	1,269.81	GAXI-0000000-000000283155-1	1	67	0	00000	0	00000	60000	5810	0000000	1,269.81
CHRISTINA D'ANDREA	000000022724219	1,269.81	GAXI-0000000-000000281201-1	1	67	0	00000	0	00000	60000	5810	0000000	1,269.81
CHRISTINA GALLO	000000022741671	8,800.00	GAXI-7420000-000000282586-1	1	01	0	00000	0	15001	42000	5810	7420000	8,800.00
CHRISTINA K. WRIGHT	202605270584508	127.00	GAXI-0000000-000000283358-1	1	67	0	00000	0	00000	60000	5810	0000000	127.00
CHRISTINE DENISE ASSESSOR	202605260584003	377.43	GAXI-0000000-000000283126-1	1	67	0	00000	0	00000	60000	5810	0000000	377.43
CHRISTINE DENISE ASSESSOR	202604300574018	377.43	GAXI-0000000-000000281588-1	1	67	0	00000	0	00000	60000	5810	0000000	377.43
CHRISTOPHER ANDREW MITCHELL	202605260583992	1,264.24	GAXI-0000000-000000283282-1	1	67	0	00000	0	00000	60000	5810	0000000	1,264.24
CINDY QUITERIO	000000022736652	786.31	GAXI-7410000-000000282494-1	1	01	0	00000	0	00000	72000	4310	7410000	66.35
CINDY QUITERIO	000000022736652	786.31	GAXI-7410000-000000282494-1	2	01	0	00000	0	00000	27000	5220	7410000	719.96
CINTAS CORPORATION	000000022728877	507.40	GAXI-7520000-000000281938-1	1	01	0	00100	0	00000	82100	5631	7520000	507.40
CITY OF BURBANK	000000022758862	143.75	GAXI-7730000-000000283118-1	1	01	0	00000	0	00000	77000	4360	7730000	143.75
CITY OF BURBANK	000000022728878	9,743.93	GAXI-7520000-000000281939-1	1	01	0	81500	0	00000	82000	4360	7520000	5,879.17
CITY OF BURBANK	000000022761248	2,494.01	GAXI-7490000-000000283222-1	1	13	0	53100	0	00000	37000	4360	7490000	1,130.68
CITY OF BURBANK	000000022728878	9,743.93	GAXI-7520000-000000281940-1	2	01	0	81500	0	00000	82000	4360	7520000	3,864.76
CITY OF BURBANK	000000022771255	1,557.19	GAXI-7520000-000000283650-1	1	01	0	00100	0	00000	82000	5560	7520000	1,557.19
CITY OF BURBANK	000000022756396	241.34	GAXI-7730000-000000282949-1	1	01	0	00000	0	00000	77000	4360	7730000	241.34
CITY OF BURBANK	000000022761248	2,494.01	GAXI-7490000-000000283443-1	2	13	0	53100	0	00000	37000	4360	7490000	1,363.33
CITY OF BURBANK	000000022765995	11,743.86	GAXI-7520000-000000283541-1	1	01	0	81500	0	00000	82000	4360	7520000	7,545.71
CITY OF BURBANK	000000022765995	11,743.86	GAXI-7520000-000000283542-1	2	01	0	81500	0	00000	82000	4360	7520000	4,198.15
CLARKE, KELLI	202605260583966	1,269.81	GAXI-0000000-000000283147-1	1	67	0	00000	0	00000	60000	5810	0000000	1,269.81
COLLINS, CHANDRA	000000022765996	210.00	GAXI-2160000-000000283561-1	1	01	0	90201	0	11100	10000	4310	2160000	210.00
COMMERCIAL DOOR OF LOS ANGELES COUNTY	000000022744266	1,197.50	GAXI-7520000-000000282631-1	1	01	0	81500	0	00000	81100	5631	7520000	1,197.50
CONVERSE CONSULTANTS	000000022765997	2,264.00	GAXI-4310000-000000283011-1	1	40	0	90329	0	00000	85000	6282	4310000	2,264.00
COUNTY OF LOS ANGELES	000000022771256	148.00	GAXI-7520000-000000283633-1	2	01	0	81500	0	00000	81100	5890	7520000	74.00
COUNTY OF LOS ANGELES	000000022771256	148.00	GAXI-7520000-000000283631-1	1	01	0	81500	0	00000	81100	5890	7520000	74.00
COUNTY OF LOS ANGELES PUBLIC HEALTH	000000022771257	37.00	GAXI-7520000-000000283632-1	1	01	0	81500	0	00000	81100	5890	7520000	37.00
COVELO GROUP, INC.	000000022733995	149,213.13	GAXI-7440000-000000282041-1	1	01	0	65000	0	57601	11804	5810	7440000	89,784.39
COVELO GROUP, INC.	000000022733995	149,213.13	GAXI-7440000-000000282047-1	2	01	0	65000	0	57601	11804	5810	7440000	59,428.74
COVELO GROUP, INC.	000000022739037	86,847.61	GAXI-7440000-000000282567-1	1	01	0	65000	0	57601	11804	5810	7440000	86,847.61
COVELO GROUP, INC.	000000022771258	86,999.18	GAXI-7440000-000000283629-1	1	01	0	65000	0	57601	11804	5810	7440000	86,999.18
COZZINI BROS, INC.	000000022751658	215.64	GAXI-7490000-000000282904-1	1	13	0	53100	0	00000	37000	5890	7490000	35.94
COZZINI BROS, INC.	000000022751658	215.64	GAXI-7490000-000000282906-1	2	13	0	53100	0	00000	37000	5890	7490000	35.94

Vendor Name	Warrant Number	Warrant Amount	Payment Doc ID	Accounting Line No.	Fund	Sub-Fund	Resource	Project Year	Goal/Categorical	Function/Activity	Object	School Location/Dept	Line Amount
COZZINI BROS, INC.	000000022751658	215.64	GAXI-7490000-000000282908-1	3	13	0	53100	0	00000	37000	5890	7490000	35.94
COZZINI BROS, INC.	000000022751658	215.64	GAXI-7490000-000000282910-1	4	13	0	53100	0	00000	37000	5890	7490000	35.94
COZZINI BROS, INC.	000000022751658	215.64	GAXI-7490000-000000282912-1	5	13	0	53100	0	00000	37000	5890	7490000	35.94
COZZINI BROS, INC.	000000022751658	215.64	GAXI-7490000-000000282913-1	6	13	0	53100	0	00000	37000	5890	7490000	35.94
COZZINI BROS, INC.	000000022771259	179.70	GAXI-7490000-000000283623-1	1	13	0	53100	0	00000	37000	5890	7490000	35.94
COZZINI BROS, INC.	000000022771259	179.70	GAXI-7490000-000000283624-1	2	13	0	53100	0	00000	37000	5890	7490000	35.94
COZZINI BROS, INC.	000000022771259	179.70	GAXI-7490000-000000283625-1	3	13	0	53100	0	00000	37000	5890	7490000	35.94
COZZINI BROS, INC.	000000022771259	179.70	GAXI-7490000-000000283626-1	4	13	0	53100	0	00000	37000	5890	7490000	35.94
COZZINI BROS, INC.	000000022771259	179.70	GAXI-7490000-000000283627-1	5	13	0	53100	0	00000	37000	5890	7490000	35.94
CROWN CASTLE FIBER LLC	000000022731260	550.00	GAXI-7401000-000000282009-1	1	01	0	00000	0	00000	72000	5910	7401000	550.00
CURRICULUM ASSOCIATES INC	000000022728879	351.74	GAXI-2130000-000000281751-1	1	01	0	00000	0	11100	10000	4310	2130000	351.74
DAILY JOURNAL CORPORATION	000000022731261	354.50	GAXI-7420000-000000282003-1	1	01	0	00000	0	00000	72000	5830	7420000	354.50
DANIEL DI MUNDO	000000022744267	270.00	GAXI-5300000-000000282597-1	1	01	0	00000	0	00000	27000	5220	5300000	270.00
DARIN WOLF	202605270584534	807.05	GAXI-0000000-000000283356-1	1	67	0	00000	0	00000	60000	5810	0000000	807.05
DAVID BIRD	000000022741672	1,077.19	GAXI-7420000-000000282591-1	1	01	0	00000	0	11100	10000	5220	7420000	1,077.19
DAVID OLMOS	202605270584487	194.83	GAXI-0000000-000000283293-1	1	67	0	00000	0	00000	60000	5810	0000000	194.83
DAVID REYES	202605270584500	194.83	GAXI-0000000-000000283301-1	1	67	0	00000	0	00000	60000	5810	0000000	194.83
DAVID THOMSON	202605270584471	1,248.29	GAXI-0000000-000000283343-1	1	67	0	00000	0	00000	60000	5810	0000000	1,248.29
DE AVILA, JENNY	202605270584472	194.83	GAXI-0000000-000000283196-1	1	67	0	00000	0	00000	60000	5810	0000000	194.83
DE AVILA, JENNY	202604300574000	194.83	GAXI-0000000-000000281206-1	1	67	0	00000	0	00000	60000	5810	0000000	194.83
DEBORAH ANN FARMER	202605270584516	798.03	GAXI-0000000-000000283216-1	1	67	0	00000	0	00000	60000	5810	0000000	798.03
DEBORAH CRANMER	202605270584522	755.91	GAXI-0000000-000000283153-1	1	67	0	00000	0	00000	60000	5810	0000000	755.91
DEBORAH CRANMER	202604300574017	755.91	GAXI-0000000-000000281199-1	1	67	0	00000	0	00000	60000	5810	0000000	755.91
DEBORAH MADRIGAL	202605260583973	1,396.00	GAXI-0000000-000000283270-1	1	67	0	00000	0	00000	60000	5810	0000000	1,396.00
DEBRA MELARAGNO	202605260584022	503.50	GAXI-0000000-000000283278-1	1	67	0	00000	0	00000	60000	5810	0000000	503.50
DELFINO ROMERO	202605270584477	194.83	GAXI-0000000-000000283308-1	1	67	0	00000	0	00000	60000	5810	0000000	194.83
DEMCO	000000022771260	448.20	GAXI-3220000-000000283776-1	1	01	0	30100	2	11100	10000	4310	3220000	448.20
DEMCO	000000022761249	1,026.92	GAXI-2060000-000000283394-1	1	01	0	90870	0	11100	10000	4310	2060000	1,026.92
DEPARTMENT OF INDUSTRIAL RELATIONS	000000022765998	125.00	GAXI-7520000-000000283537-1	1	01	0	81500	0	00000	81100	5880	7520000	125.00
DEPARTMENT OF INDUSTRIAL RELATIONS	000000022731262	225.00	GAXI-7520000-000000282033-1	1	01	0	81500	0	00000	81100	5880	7520000	225.00
DEPARTMENT OF JUSTICE	000000022751659	831.00	GAXI-7550000-000000282899-1	1	01	0	00000	0	00000	72000	5860	7550000	831.00
DIANA RHOADS	202605270584476	1,269.81	GAXI-0000000-000000283302-1	1	67	0	00000	0	00000	60000	5810	0000000	1,269.81
DICK BLICK CO	000000022771261	169.81	GAXI-4310000-000000283616-1	1	01	0	67700	2	11100	10000	4310	4310000	154.08
DICK BLICK CO	000000022746731	499.82	GAXI-3200000-000000282659-1	1	01	0	67700	1	11100	10000	4316	3200000	391.16
DICK BLICK CO	000000022736653	377.64	GAXI-2150000-000000282538-1	3	01	0	67700	2	11100	10000	4310	2150000	339.30
DICK BLICK CO	000000022736653	377.64	GAXI-2150000-000000282537-1	2	01	0	67700	2	11100	10000	4310	2150000	-36.45
DICK BLICK CO	000000022746731	499.82	GAXI-3200000-000000282660-1	2	01	0	67700	1	11100	10000	4316	3200000	11.03
DICK BLICK CO	000000022736653	377.64	GAXI-4310000-000000282333-1	1	01	0	00000	0	17001	10000	4310	4310000	74.79
DICK BLICK CO	000000022746731	499.82	GAXI-3220000-000000282709-1	3	01	0	00000	0	17001	10000	4310	3220000	97.37
DICK BLICK CO	000000022746731	499.82	GAXI-3220000-000000282709-1	4	01	0	00000	0	11100	10000	4310	3220000	0.26
DICK BLICK CO	000000022761250	260.73	GAXI-2140000-000000283451-1	1	01	0	90201	0	11100	10000	4310	2140000	260.73
DICK BLICK CO	000000022771261	169.81	GAXI-3200000-000000283839-1	2	01	0	67700	1	11100	10000	4316	3200000	15.73
DIGITAL SCEPTER CORPORATION	000000022731263	21,964.13	GAXI-7730000-000000281999-1	1	01	0	00000	0	00000	77000	5840	7730000	21,964.13
DIGITAL SCEPTER CORPORATION	000000022751660	509,210.65	GAXI-7730000-000000281998-1	1	01	0	00000	0	00000	77000	6550	7730000	509,210.65
DIONNE K BRADSHAW	202605260584020	1,269.81	GAXI-0000000-000000283135-1	1	67	0	00000	0	00000	60000	5810	0000000	1,269.81
DIXON, MICHELLE	000000022749206	11.31	GAXI-7720000-000000282841-1	1	01	0	00000	0	11100	10000	5210	7720000	11.31
DIY HOME CENTER	000000022751661	298.86	GAXI-7520000-000000282937-1	1	01	0	81500	0	00000	81100	4310	7520000	78.75
DIY HOME CENTER	000000022751661	298.86	GAXI-7520000-000000282938-1	2	01	0	81500	0	00000	81100	4310	7520000	19.85
DIY HOME CENTER	000000022728880	204.27	GAXI-7520000-000000281943-1	3	01	0	81500	0	00000	81100	4310	7520000	7.51
DIY HOME CENTER	000000022728880	204.27	GAXI-7520000-000000281942-1	2	01	0	81500	0	00000	81100	4310	7520000	15.37
DIY HOME CENTER	000000022728880	204.27	GAXI-7520000-000000281941-1	1	01	0	81500	0	00000	81100	4310	7520000	15.90
DIY HOME CENTER	000000022728880	204.27	GAXI-7520000-000000281944-1	4	01	0	81500	0	00000	81100	4310	7520000	16.67
DIY HOME CENTER	000000022728880	204.27	GAXI-7520000-000000281945-1	5	01	0	81500	0	00000	81100	4310	7520000	15.43
DIY HOME CENTER	000000022728880	204.27	GAXI-7520000-000000281946-1	6	01	0	81500	0	00000	81100	4310	7520000	15.99
DIY HOME CENTER	000000022728880	204.27	GAXI-7520000-000000281947-1	7	01	0	81500	0	00000	81100	4310	7520000	30.09
DIY HOME CENTER	000000022728880	204.27	GAXI-7520000-000000281948-1	8	01	0	81500	0	00000	81100	4310	7520000	33.28
DIY HOME CENTER	000000022728880	204.27	GAXI-7520000-000000281950-1	10	01	0	81500	0	00000	81100	4310	7520000	25.85
DIY HOME CENTER	000000022728880	204.27	GAXI-7520000-000000281949-1	9	01	0	81500	0	00000	81100	4310	7520000	28.18
DIY HOME CENTER	000000022749207	173.90	GAXI-7520000-000000282805-1	2	01	0	81500	0	00000	81100	4310	7520000	32.80

Vendor Name	Warrant Number	Warrant Amount	Payment Doc ID	Accounting Line No.	Fund	Sub-Fund	Resource	Project Year	Goal/Categorical	Function/Activity	Object	School Location/Dept	Line Amount
DIY HOME CENTER	000000022749207	173.90	GAXI-7520000-000000282804-1	1	01	0	81500	0	00000	81100	4310	7520000	32.18
DIY HOME CENTER	000000022749207	173.90	GAXI-7520000-000000282807-1	4	01	0	81500	0	00000	81100	4310	7520000	52.33
DIY HOME CENTER	000000022749207	173.90	GAXI-7520000-000000282806-1	3	01	0	81500	0	00000	81100	4310	7520000	26.32
DIY HOME CENTER	000000022749207	173.90	GAXI-7520000-000000282808-1	5	01	0	81500	0	00000	81100	4310	7520000	30.27
DIY HOME CENTER	000000022751661	298.86	GAXI-7520000-000000282952-1	4	01	0	81500	0	00000	81100	4310	7520000	58.64
DIY HOME CENTER	000000022751661	298.86	GAXI-7520000-000000282950-1	3	01	0	81500	0	00000	81100	4310	7520000	94.97
DIY HOME CENTER	000000022751661	298.86	GAXI-7520000-000000282953-1	5	01	0	81500	0	00000	81100	4310	7520000	46.65
DIY HOME CENTER	000000022771262	119.24	GAXI-7520000-000000283786-1	1	01	0	81500	0	00000	81100	4310	7520000	28.80
DIY HOME CENTER	000000022771262	119.24	GAXI-7520000-000000283790-1	2	01	0	81500	0	00000	81100	4310	7520000	35.78
DIY HOME CENTER	000000022771262	119.24	GAXI-7520000-000000283791-1	3	01	0	81500	0	00000	81100	4310	7520000	42.74
DIY HOME CENTER	000000022771262	119.24	GAXI-7520000-000000283792-1	4	01	0	81500	0	00000	81100	4310	7520000	11.92
DOLORES (DEE) NIEDRINGHAUS, BSN RN	000000022728881	5,867.00	GAXI-5330000-000000281918-1	1	11	0	63910	0	41104	10000	5810	5330000	5,867.00
DONNA S SPAULDING	202605270584482	503.50	GAXI-0000000-000000283338-1	1	67	0	00000	0	00000	60000	5810	0000000	503.50
DR. VERONICA I. OLVERA, PH.D	000000022756397	6,500.00	GAXI-7440000-000000283045-1	1	01	0	65000	0	57602	11900	5850	7440000	6,500.00
DUBNOFF/VALLEY HIGH SCHOOL	000000022739038	18,648.98	GAXI-7440000-000000282562-1	1	01	0	65000	0	57601	11800	5810	7440000	18,428.98
DUBNOFF/VALLEY HIGH SCHOOL	000000022739038	18,648.98	GAXI-7440000-000000282562-1	2	01	0	65460	0	57601	11800	5810	7440000	220.00
DUNN EDWARDS CORP	000000022751662	1,864.15	GAXI-7520000-000000282961-1	2	01	0	81500	0	00000	81100	4310	7520000	354.91
DUNN EDWARDS CORP	000000022751662	1,864.15	GAXI-7520000-000000282966-1	6	01	0	81500	0	00000	81100	4310	7520000	383.03
DUNN EDWARDS CORP	000000022751662	1,864.15	GAXI-7520000-000000282967-1	7	01	0	81500	0	00000	81100	4310	7520000	419.87
DUNN EDWARDS CORP	000000022751662	1,864.15	GAXI-7520000-000000282959-1	1	01	0	81500	0	00000	81100	4310	7520000	131.85
DUNN EDWARDS CORP	000000022731264	308.68	GAXI-7520000-000000281951-1	1	01	0	81500	0	00000	81100	4310	7520000	88.47
DUNN EDWARDS CORP	000000022731264	308.68	GAXI-7520000-000000281952-1	2	01	0	81500	0	00000	81100	4310	7520000	64.07
DUNN EDWARDS CORP	000000022731264	308.68	GAXI-7520000-000000281953-1	3	01	0	81500	0	00000	81100	4310	7520000	156.14
DUNN EDWARDS CORP	000000022749208	19.88	GAXI-7520000-000000282809-1	1	01	0	81500	0	00000	81100	4310	7520000	19.88
DUNN EDWARDS CORP	000000022751662	1,864.15	GAXI-7520000-000000282962-1	3	01	0	81500	0	00000	81100	4310	7520000	109.45
DUNN EDWARDS CORP	000000022751662	1,864.15	GAXI-7520000-000000282964-1	4	01	0	81500	0	00000	81100	4310	7520000	218.28
DUNN EDWARDS CORP	000000022751662	1,864.15	GAXI-7520000-000000282965-1	5	01	0	81500	0	00000	81100	4310	7520000	44.69
DUNN EDWARDS CORP	000000022751662	1,864.15	GAXI-7520000-000000282968-1	8	01	0	81500	0	00000	81100	4310	7520000	202.07
DUNN EDWARDS CORP	000000022771263	379.45	GAXI-7520000-000000283814-1	2	01	0	81500	0	00000	81100	4310	7520000	272.99
DUNN EDWARDS CORP	000000022771263	379.45	GAXI-7520000-000000283811-1	1	01	0	81500	0	00000	81100	4310	7520000	106.46
DUNN EDWARDS CORPORATION	000000022744268	224.65	GAX-7520000-260000000003-1	1	01	0	81500	0	00000	81100	9522	7520000	224.65
DURHAM SCHOOL SERVICES, L.P.	000000022761251	3,532.14	GAXI-2130000-000000283449-1	1	01	0	90880	0	11100	10000	5811	2130000	3,532.14
EDGE, ALYSON	202605270584495	807.05	GAXI-0000000-000000283212-1	1	67	0	00000	0	00000	60000	5810	0000000	807.05
EDMENTUM	000000022751663	19,914.00	GAXI-5330000-000000282960-1	1	11	0	63910	0	41104	10000	5840	5330000	19,914.00
EDWARD DEVIRGILIS	000000022756398	112.00	GAXI-3220000-000000283116-1	1	01	0	90201	0	00000	00000	4310	3220000	112.00
EDWIN TAYLOR	000000022741673	209.82	GAXI-3200000-000000282593-1	1	01	0	90711	0	00000	27000	4395	3200000	209.82
ELAYNE HOWITT	000000022765999	74.45	GAXI-7440000-000000283567-1	1	01	0	65200	0	50010	21000	5220	7440000	74.45
ELEVATE K12 LEADERSHIP, LLC.	000000022756399	28,600.00	GAXI-7470000-000000283113-1	1	01	0	00000	0	00000	72000	5850	7470000	28,600.00
ELISA SAHAGUN	202605270584547	807.05	GAXI-0000000-000000283311-1	1	67	0	00000	0	00000	60000	5810	0000000	807.05
ELIZABETH BITNER	202605260584018	1,248.29	GAXI-0000000-000000283133-1	1	67	0	00000	0	00000	60000	5810	0000000	1,248.29
ELIZABETH GREEN	000000022736654	39.44	GAXI-2150000-000000282504-1	1	01	0	90870	0	11100	10000	4310	2150000	39.44
ELIZABETH THOMAS	202605270584465	1,269.81	GAXI-0000000-000000283341-1	1	67	0	00000	0	00000	60000	5810	0000000	1,269.81
ELIZABETH WOOD	202605270584535	1,248.29	GAXI-0000000-000000283357-1	1	67	0	00000	0	00000	60000	5810	0000000	1,248.29
EMILY PIERCE	000000022739039	119.88	GAXI-4320000-000000282501-1	1	01	0	00000	0	17011	10000	5310	4320000	119.88
EMILY PIERCE	000000022736655	109.00	GAXI-4320000-000000282541-1	1	01	0	00000	0	17011	10000	5840	4320000	109.00
EMILY WEISBERG	000000022761252	890.34	GAXI-7560000-000000283372-1	1	01	0	00000	0	00000	27000	5220	7560000	890.34
ERIC HERNANDEZ	000000022771264	1,800.00	GAXI-3220000-000000283641-1	1	01	0	90904	0	00000	00000	5850	3220000	1,800.00
ESCOBAR, CELIA MOLINA	202605260583963	503.50	GAXI-0000000-000000283284-1	1	67	0	00000	0	00000	60000	5810	0000000	503.50
ESTHER JANG	000000022766000	200.00	GAXI-7440000-000000283563-1	1	01	0	65000	0	57602	11901	4310	7440000	200.00
EVERNORTH CARE SOLUTIONS, INC.	000000022753990	3,092.04	GAXI-0000000-000000283029-1	1	01	0	00000	0	00000	00000	9530	0000000	3,092.04
EVERYDAY SPEECH LLC	000000022728883	8,099.85	GAXI-7440000-000000281610-1	1	01	0	65000	0	57602	11100	5840	7440000	8,099.85
EVERY SPECIAL CHILD, LLC	000000022728882	7,920.00	GAXI-7440000-000000281758-1	1	01	0	65000	0	57602	11901	5850	7440000	7,920.00
EVERY SPECIAL CHILD, LLC	000000022739040	8,800.00	GAXI-7440000-000000282529-1	1	01	0	65000	0	57602	11901	5850	7440000	8,800.00
EWING IRRIGATION PRODUCTS	000000022751664	526.84	GAXI-7520000-000000282919-1	1	01	0	81500	0	00000	81100	4382	7520000	526.84
FEDERAL EXPRESS	000000022733996	18.73	GAXI-7400000-000000282210-1	1	01	0	00000	0	00000	72000	5920	7400000	18.73
FEDERAL FINGERPRINTING, INC.	000000022728884	1,092.00	GAXI-5330000-000000281917-1	1	11	0	00639	0	41104	10000	4310	5330000	1,092.00
FEDERICA MALTESE	000000022741674	400.94	GAXI-7420000-000000282592-1	1	01	0	00000	0	11100	10000	5220	7420000	400.94
FERGUSON ENTERPRISES LLC #1350	000000022731265	856.71	GAXI-7520000-000000281954-1	1	01	0	81500	0	00000	81100	4310	7520000	955.22
FERGUSON ENTERPRISES LLC #1350	000000022731265	856.71	GAXI-7520000-000000281955-1	2	01	0	81500	0	00000	81100	4310	7520000	104.26

Vendor Name	Warrant Number	Warrant Amount	Payment Doc ID	Accounting Line No.	Fund	Sub-Fund	Resource	Project Year	Goal/Categorical	Function/Activity	Object	School Location/Dept	Line Amount
FERGUSON ENTERPRISES LLC #1350	000000022731265	856.71	GAXI-7520000-000000281956-1	3	01	0	81500	0	00000	81100	4310	7520000	188.82
FERGUSON ENTERPRISES LLC #1350	000000022731265	856.71	GAXI-7520000-000000281957-1	4	01	0	81500	0	00000	81100	4310	7520000	238.32
FERGUSON ENTERPRISES LLC #1350	000000022749209	2,499.36	GAXI-7520000-000000282812-1	1	01	0	81500	0	00000	81100	4310	7520000	476.26
FERGUSON ENTERPRISES LLC #1350	000000022749209	2,499.36	GAXI-7520000-000000282813-1	2	01	0	81500	0	00000	81100	4310	7520000	41.31
FERGUSON ENTERPRISES LLC #1350	000000022749209	2,499.36	GAXI-7520000-000000282814-1	3	01	0	81500	0	00000	81100	4310	7520000	283.86
FERGUSON ENTERPRISES LLC #1350	000000022749209	2,499.36	GAXI-7520000-000000282815-1	4	01	0	81500	0	00000	81100	4310	7520000	560.26
FERGUSON ENTERPRISES LLC #1350	000000022749209	2,499.36	GAXI-7520000-000000282816-1	5	01	0	81500	0	00000	81100	4310	7520000	91.44
FERGUSON ENTERPRISES LLC #1350	000000022749209	2,499.36	GAXI-7520000-000000282817-1	6	01	0	81500	0	00000	81100	4310	7520000	124.67
FERGUSON ENTERPRISES LLC #1350	000000022749209	2,499.36	GAXI-7520000-000000282818-1	7	01	0	81500	0	00000	81100	4310	7520000	617.95
FERGUSON ENTERPRISES LLC #1350	000000022749209	2,499.36	GAXI-7520000-000000282821-1	10	01	0	81500	0	00000	81100	4310	7520000	152.16
FERGUSON ENTERPRISES LLC #1350	000000022761253	1,693.94	GAXI-7520000-000000283491-1	4	01	0	81500	0	00000	81100	4310	7520000	849.38
FERGUSON ENTERPRISES LLC #1350	000000022749209	2,499.36	GAXI-7520000-000000282819-1	8	01	0	81500	0	00000	81100	4310	7520000	28.54
FERGUSON ENTERPRISES LLC #1350	000000022749209	2,499.36	GAXI-7520000-000000282820-1	9	01	0	81500	0	00000	81100	4310	7520000	122.91
FERGUSON ENTERPRISES LLC #1350	000000022761253	1,693.94	GAXI-7520000-000000283487-1	1	01	0	81500	0	00000	81100	4310	7520000	13.23
FERGUSON ENTERPRISES LLC #1350	000000022761253	1,693.94	GAXI-7520000-000000283489-1	2	01	0	81500	0	00000	81100	4310	7520000	84.36
FERGUSON ENTERPRISES LLC #1350	000000022761253	1,693.94	GAXI-7520000-000000283495-1	7	01	0	81500	0	00000	81100	4310	7520000	3.25
FERGUSON ENTERPRISES LLC #1350	000000022761253	1,693.94	GAXI-7520000-000000283490-1	3	01	0	81500	0	00000	81100	4310	7520000	361.48
FERGUSON ENTERPRISES LLC #1350	000000022761253	1,693.94	GAXI-7520000-000000283493-1	6	01	0	81500	0	00000	81100	4310	7520000	22.87
FERGUSON ENTERPRISES LLC #1350	000000022766001	1,476.69	GAXI-7520000-000000283499-1	1	01	0	81500	0	00000	81100	4310	7520000	105.99
FERGUSON ENTERPRISES LLC #1350	000000022766001	1,476.69	GAXI-7520000-000000283502-1	3	01	0	81500	0	00000	81100	4310	7520000	241.83
FERGUSON ENTERPRISES LLC #1350	000000022766001	1,476.69	GAXI-7520000-000000283501-1	2	01	0	81500	0	00000	81100	4310	7520000	93.68
FERGUSON ENTERPRISES LLC #1350	000000022766001	1,476.69	GAXI-7520000-000000283503-1	4	01	0	81500	0	00000	81100	4310	7520000	583.52
FERGUSON ENTERPRISES LLC #1350	000000022766001	1,476.69	GAXI-7520000-000000283507-1	5	01	0	81500	0	00000	81100	4310	7520000	339.26
FERGUSON ENTERPRISES LLC #1350	000000022766001	1,476.69	GAXI-7520000-000000283508-1	6	01	0	81500	0	00000	81100	4310	7520000	67.50
FERGUSON ENTERPRISES LLC #1350	000000022766001	1,476.69	GAXI-7520000-000000283509-1	7	01	0	81500	0	00000	81100	4310	7520000	13.19
FERGUSON ENTERPRISES LLC #1350	000000022766001	1,476.69	GAXI-7520000-000000283510-1	8	01	0	81500	0	00000	81100	4310	7520000	31.72
FERGUSON ENTERPRISES LLC #1350	000000022771265	672.17	GAXI-7520000-000000283830-1	1	01	0	81500	0	00000	81100	4310	7520000	124.43
FERGUSON ENTERPRISES LLC #1350	000000022771265	672.17	GAXI-7520000-000000283831-1	2	01	0	81500	0	00000	81100	4310	7520000	53.30
FERGUSON ENTERPRISES LLC #1350	000000022771265	672.17	GAXI-7520000-000000283832-1	3	01	0	81500	0	00000	81100	4310	7520000	231.53
FERGUSON ENTERPRISES LLC #1350	000000022771265	672.17	GAXI-7520000-000000283833-1	4	01	0	81500	0	00000	81100	4310	7520000	40.93
FERGUSON ENTERPRISES LLC #1350	000000022771265	672.17	GAXI-7520000-000000283834-1	5	01	0	81500	0	00000	81100	4310	7520000	221.98
FERGUSON ENTERPRISES LLC #1350	000000022761253	1,693.94	GAXI-7520000-000000283492-1	5	01	0	81500	0	00000	81100	4310	7520000	359.37
FERGUSON ENTERPRISES LLC #1350	000000022731265	856.71	GAXI-7520000-000000281958-1	5	01	0	81500	0	00000	81100	4310	7520000	-629.91
FERNANDO GAJAN	000000022736656	170.00	GAXI-4320000-000000282488-1	1	01	0	00000	0	13000	10000	5840	4320000	170.00
FIRST STUDENT, INC	000000022736657	3,476.46	GAXI-2140000-000000282534-1	1	01	0	90201	0	11100	10000	5811	2140000	1,738.17
FIRST STUDENT, INC	000000022736657	3,476.46	GAXI-2140000-000000282535-1	2	01	0	90201	0	11100	10000	5811	2140000	1,738.29
FIRST STUDENT, INC	000000022756400	25,681.40	GAXI-7440000-000000283047-1	1	01	0	07240	0	50010	36000	5812	7440000	25,681.40
FIRST STUDENT, INC	000000022766002	3,840.20	GAXI-2060000-000000283519-1	1	01	0	90880	0	13400	10000	5811	2060000	2,751.00
FIRST STUDENT, INC	000000022766002	3,840.20	GAXI-7440000-000000283535-1	2	01	0	07240	0	50010	36000	5812	7440000	1,089.20
FIRST UNITED METHODIST CHURCH OF BURBANK & NURSERY	000000022739041	650.00	GAXI-2060000-000000281683-1	1	01	0	90870	0	00000	27000	5610	2060000	650.00
FLEWELLING & MOODY INC	000000022766003	31,993.63	GAXI-4310000-000000283013-1	1	40	0	90329	0	00000	85000	6205	4310000	2,365.63
FLEWELLING & MOODY INC	000000022766003	31,993.63	GAXI-4310000-000000283024-1	2	40	0	90329	0	00000	85000	6205	4310000	29,628.00
FLINN SCIENTIFIC INC	000000022771266	1,704.50	GAXI-4310000-000000283619-1	1	01	0	00000	0	13400	10000	4310	4310000	1,373.03
FLINN SCIENTIFIC INC	000000022746732	352.97	GAXI-4320000-000000282734-1	1	01	0	00000	0	13400	10000	4310	4320000	352.97
FLINN SCIENTIFIC INC	000000022771266	1,704.50	GAXI-4310000-000000283648-1	2	01	0	00000	0	11100	10000	4310	4310000	331.47
FOLLETT CONTENT SOLUTIONS LLC	000000022771267	665.52	GAXI-7420000-000000283362-1	1	01	0	45100	2	11100	10000	4210	7420000	333.88
FOLLETT CONTENT SOLUTIONS LLC	000000022771267	665.52	GAXI-7420000-000000283363-1	2	01	0	45100	2	11100	10000	4210	7420000	85.75
FOLLETT CONTENT SOLUTIONS LLC	000000022771267	665.52	GAXI-7420000-000000283763-1	5	01	0	45100	2	11100	10000	4210	7420000	80.06
FOLLETT CONTENT SOLUTIONS LLC	000000022771267	665.52	GAXI-7420000-000000283588-1	3	01	0	45100	2	11100	10000	4210	7420000	96.15
FOLLETT CONTENT SOLUTIONS LLC	000000022771267	665.52	GAXI-7420000-000000283620-1	4	01	0	45100	2	11100	10000	4210	7420000	69.68
FRANCISCO J VILLARREAL	202605270584485	194.83	GAXI-0000000-000000283350-1	1	67	0	00000	0	00000	60000	5810	0000000	194.83
FUN EXPRESS LLC	000000022761254	58.51	GAXI-2060000-000000283392-1	1	01	0	90870	0	11100	10000	4310	2060000	58.51
GARY D STROMBERG & ASSOCIATES LLC	000000022749210	24,149.25	GAXI-7440000-000000282701-1	2	01	0	65000	0	57602	11900	5850	7440000	8,861.25
GARY D STROMBERG & ASSOCIATES LLC	000000022749210	24,149.25	GAXI-7440000-000000282700-1	1	01	0	65000	0	57602	11901	5850	7440000	15,288.00
GENESIS FLOOR COVERING, INC.	000000022751665	19,035.00	GAXI-7520000-000000282893-1	1	01	0	81500	0	00000	81100	5631	7520000	19,035.00
GENEVA RICHARDS TARANDEK	202605270584514	825.69	GAXI-0000000-000000283303-1	1	67	0	00000	0	00000	60000	5810	0000000	825.69
GEORGAN YANTZ	202605270584467	1,269.81	GAXI-0000000-000000283360-1	1	67	0	00000	0	00000	60000	5810	0000000	1,269.81
GERARDO MENDEZ	000000022736658	506.59	GAXI-7460000-000000282497-1	1	01	0	63870	0	38000	10000	5220	7460000	506.59
GEYER INSTRUCTIONAL PRODUCTS	000000022741675	672.69	GAXI-2020000-000000282620-1	1	01	0	90870	0	11100	10000	4310	2020000	672.69

Vendor Name	Warrant Number	Warrant Amount	Payment Doc ID	Accounting Line No.	Fund	Sub-Fund	Resource	Project Year	Goal/Categorical	Function/Activity	Object	School Location/Dept	Line Amount
GHADA BAKHOS	202605260583975	194.83	GAXI-0000000-000000283130-1	1	67	0	00000	0	00000	60000	5810	0000000	194.83
GLENDA ARRIOLA-ALCAZAR	000000022744269	163.00	GAXI-4310000-000000282539-1	1	01	0	00000	0	12000	10000	5840	4310000	163.00
GLEN H JAFFE	000000022756401	1,500.00	GAXI-3220000-000000283112-1	1	01	0	30100	1	11100	10000	5810	3220000	1,500.00
GLOBAL EQUIPMENT COMPANY	000000022751666	9,599.70	GAXI-2090000-000000282624-1	1	01	0	00000	0	11100	10000	4480	2090000	9,599.70
GLOBAL LEASE GROUP, INC.	000000022766004	613.27	GAXI-7440000-000000282810-1	1	01	0	58100	0	57602	91000	7439	7440000	613.27
GLORIA DIANE MEZA	202605260583978	194.83	GAXI-0000000-000000283280-1	1	67	0	00000	0	00000	60000	5810	0000000	194.83
GLORIA LARA	202605260583977	409.70	GAXI-0000000-000000283260-1	1	67	0	00000	0	00000	60000	5810	0000000	409.70
GOLD STAR FOODS	000000022733997	58,245.32	GAXI-7490000-000000282271-1	1	13	0	53100	0	00000	37000	4712	7490000	58,245.32
GOLD STAR FOODS	000000022751667	50,077.82	GAXI-7490000-000000282915-1	1	13	0	53100	0	00000	37000	4712	7490000	50,077.82
GOLD STAR FOODS	000000022761255	58,730.24	GAXI-7490000-000000283243-1	1	13	0	53100	0	00000	37000	4712	7490000	58,730.24
GOLD STAR FOODS	000000022771268	56,097.57	GAXI-7490000-000000283628-1	1	13	0	53100	0	00000	37000	4712	7490000	56,097.57
GOPHER SPORT	000000022736659	867.52	GAXI-2090000-000000282522-1	1	01	0	00000	0	11100	10000	4310	2090000	867.52
GOPHER SPORT	000000022761256	589.68	GAXI-2140000-000000283452-1	1	01	0	00000	0	11100	10000	4310	2140000	589.68
GOPHER SPORT	000000022751668	142.85	GAXI-2030000-000000282874-1	1	01	0	00000	0	15000	10000	4310	2030000	142.85
GORDY'S WELDING SUPPLY	000000022724220	283.40	GAXI-7520000-000000281634-1	1	01	0	81500	0	00000	81100	4310	7520000	283.40
GRAINGER	000000022731266	2,393.32	GAXI-7520000-000000281959-1	1	01	0	81500	0	00000	81100	4310	7520000	415.54
GRAINGER	000000022731266	2,393.32	GAXI-7520000-000000281960-1	2	01	0	81500	0	00000	81100	4310	7520000	20.60
GRAINGER	000000022731266	2,393.32	GAXI-7520000-000000281961-1	3	01	0	81500	0	00000	81100	4310	7520000	975.73
GRAINGER	000000022731266	2,393.32	GAXI-7520000-000000281962-1	4	01	0	81500	0	00000	81100	4310	7520000	238.54
GRAINGER	000000022731266	2,393.32	GAXI-7520000-000000281963-1	5	01	0	81500	0	00000	81100	4310	7520000	742.91
GRAINGER	000000022749211	2,199.36	GAXI-7520000-000000282822-1	1	01	0	81500	0	00000	81100	4310	7520000	247.90
GRAINGER	000000022749211	2,199.36	GAXI-7520000-000000282823-1	2	01	0	81500	0	00000	81100	4310	7520000	1,951.46
GRAINGER	000000022751669	671.02	GAXI-7520000-000000282921-1	2	01	0	81500	0	00000	81100	4310	7520000	54.64
GRAINGER	000000022751669	671.02	GAXI-7520000-000000282920-1	1	01	0	81500	0	00000	81100	4310	7520000	218.52
GRAINGER	000000022751669	671.02	GAXI-7520000-000000282922-1	3	01	0	81500	0	00000	81100	4310	7520000	397.86
GRAY STEP SOFTWARE, INC	000000022751670	5,392.74	GAXI-7400000-000000282853-1	1	01	0	00000	0	00000	72000	5890	7400000	1,320.90
GRAY STEP SOFTWARE, INC	000000022751670	5,392.74	GAXI-7400000-000000282855-1	2	01	0	00000	0	00000	72000	5890	7400000	916.98
GRAY STEP SOFTWARE, INC	000000022751670	5,392.74	GAXI-7400000-000000282857-1	3	01	0	00000	0	00000	72000	5890	7400000	1,320.90
GRAY STEP SOFTWARE, INC	000000022751670	5,392.74	GAXI-7400000-000000282858-1	4	01	0	00000	0	00000	72000	5890	7400000	916.98
GRAY STEP SOFTWARE, INC	000000022751670	5,392.74	GAXI-7400000-000000282859-1	5	01	0	00000	0	00000	72000	5890	7400000	916.98
GREG MILLER	000000022766005	222.62	GAXI-3220000-000000283562-1	1	01	0	90201	0	00000	27000	5220	3220000	40.00
GREG MILLER	000000022766005	222.62	GAXI-3220000-000000283562-1	2	01	0	90201	0	00000	10000	4395	3220000	182.62
GTG TRANSPORTATION	000000022771269	38,920.00	GAXI-4310000-000000283615-1	2	01	0	00000	0	11100	41000	5812	4310000	22,694.00
GTG TRANSPORTATION	000000022771269	38,920.00	GAXI-4310000-000000283614-1	1	01	0	00000	0	11100	41000	5812	4310000	16,226.00
GUITAR CENTER	000000022766006	2,659.74	GAXI-7460000-000000283584-1	2	01	0	90806	0	11100	10000	4310	7460000	287.30
GUITAR CENTER	000000022766006	2,659.74	GAXI-7460000-000000283582-1	1	01	0	90806	0	11100	10000	4310	7460000	2,372.44
GUTMAN, JONATHAN AND MARGARITA	000000022761257	6,019.30	GAXI-7440000-000000283439-1	1	01	0	65000	0	50010	36000	5813	7440000	6,019.30
HALLIE ELIZABETH FLEISHMAN	202605270584515	1,269.81	GAXI-0000000-000000283220-1	1	67	0	00000	0	00000	60000	5810	0000000	1,269.81
HAND2MIND, INC.	000000022761258	276.19	GAXI-2020000-000000283315-1	1	01	0	90870	0	11100	10000	4310	2020000	276.19
HART DESIGN BUILD, INC.	000000022744270	107,717.85	GAXI-4310000-000000280628-1	1	40	0	90329	0	00000	85000	6250	4310000	107,717.85
HASA INC	000000022731267	1,291.66	GAXI-4320000-000000281964-1	1	01	0	00000	0	00000	81100	4373	4320000	1,056.81
HASA INC	000000022731267	1,291.66	GAXI-7520000-000000281964-1	2	01	0	81500	0	00000	81100	4373	7520000	234.85
HATHAWAY-SYCAMORES CHILD AND FAIMILY SERVICES	000000022739042	64,467.41	GAXI-7440000-000000282486-1	1	01	0	33270	0	57601	11800	5810	7440000	17,631.52
HATHAWAY-SYCAMORES CHILD AND FAIMILY SERVICES	000000022739042	64,467.41	GAXI-7440000-000000282486-1	2	01	0	65460	0	57601	11800	5810	7440000	3,358.39
HATHAWAY-SYCAMORES CHILD AND FAIMILY SERVICES	000000022739042	64,467.41	GAXI-7440000-000000282528-1	3	01	0	65460	0	57601	11800	5810	7440000	43,477.50
HATHAWAY-SYCAMORES CHILD AND FAIMILY SERVICES	000000022749213	29,053.20	GAXI-7440000-000000282584-1	1	01	0	65460	0	57601	11800	5810	7440000	29,053.20
HD SUPPLY FACILITIES MAINTENANCE LTD	000000022758863	2,971.71	GAXI-7520000-000000283171-1	1	01	0	81500	0	00000	81100	4310	7520000	52.51
HD SUPPLY FACILITIES MAINTENANCE LTD	000000022758863	2,971.71	GAXI-7520000-000000283172-1	2	01	0	81500	0	00000	81100	4310	7520000	1,172.26
HD SUPPLY FACILITIES MAINTENANCE LTD	000000022758863	2,971.71	GAXI-7520000-000000283173-1	3	01	0	81500	0	00000	81100	4310	7520000	254.04
HD SUPPLY FACILITIES MAINTENANCE LTD	000000022758863	2,971.71	GAXI-7520000-000000283174-1	4	01	0	81500	0	00000	81100	4310	7520000	210.47
HD SUPPLY FACILITIES MAINTENANCE LTD	000000022758863	2,971.71	GAXI-7520000-000000283175-1	5	01	0	81500	0	00000	81100	4310	7520000	104.27
HD SUPPLY FACILITIES MAINTENANCE LTD	000000022758863	2,971.71	GAXI-7520000-000000283176-1	6	01	0	81500	0	00000	81100	4310	7520000	108.88
HD SUPPLY FACILITIES MAINTENANCE LTD	000000022758863	2,971.71	GAXI-7520000-000000283177-1	7	01	0	81500	0	00000	81100	4310	7520000	71.36
HD SUPPLY FACILITIES MAINTENANCE LTD	000000022758863	2,971.71	GAXI-7520000-000000283178-1	8	01	0	81500	0	00000	81100	4310	7520000	109.31
HD SUPPLY FACILITIES MAINTENANCE LTD	000000022758863	2,971.71	GAXI-7520000-000000283179-1	9	01	0	81500	0	00000	81100	4310	7520000	199.45
HD SUPPLY FACILITIES MAINTENANCE LTD	000000022758863	2,971.71	GAXI-7520000-000000283184-1	10	01	0	81500	0	00000	81100	4310	7520000	27.15
HD SUPPLY FACILITIES MAINTENANCE LTD	000000022758863	2,971.71	GAXI-7520000-000000283185-1	11	01	0	81500	0	00000	81100	4310	7520000	26.39
HD SUPPLY FACILITIES MAINTENANCE LTD	000000022758863	2,971.71	GAXI-7520000-000000283186-1	12	01	0	81500	0	00000	81100	4310	7520000	45.57
HD SUPPLY FACILITIES MAINTENANCE LTD	000000022758863	2,971.71	GAXI-7520000-000000283187-1	13	01	0	81500	0	00000	81100	4310	7520000	15.41

Vendor Name	Warrant Number	Warrant Amount	Payment Doc ID	Accounting Line No.	Fund	Sub-Fund	Resource	Project Year	Goal/Categorical	Function/Activity	Object	School Location/Dept	Line Amount
HD SUPPLY FACILITIES MAINTENANCE LTD	000000022758863	2,971.71	GAXI-7520000-000000283190-1	16	01	0	81500	0	00000	81100	4310	7520000	83.90
HD SUPPLY FACILITIES MAINTENANCE LTD	000000022758863	2,971.71	GAXI-7520000-000000283188-1	14	01	0	81500	0	00000	81100	4310	7520000	135.46
HD SUPPLY FACILITIES MAINTENANCE LTD	000000022758863	2,971.71	GAXI-7520000-000000283189-1	15	01	0	81500	0	00000	81100	4310	7520000	38.30
HD SUPPLY FACILITIES MAINTENANCE LTD	000000022758863	2,971.71	GAXI-7520000-000000283191-1	17	01	0	81500	0	00000	81100	4310	7520000	82.48
HD SUPPLY FACILITIES MAINTENANCE LTD	000000022758863	2,971.71	GAXI-7520000-000000283192-1	18	01	0	81500	0	00000	81100	4310	7520000	234.50
HD SUPPLY FACILITIES MAINTENANCE LTD	000000022751671	3,747.25	GAXI-7520000-000000282885-1	3	01	0	81500	0	00000	81100	4310	7520000	288.63
HD SUPPLY FACILITIES MAINTENANCE LTD	000000022751671	3,747.25	GAXI-7520000-000000282886-1	4	01	0	81500	0	00000	81100	4310	7520000	46.80
HD SUPPLY FACILITIES MAINTENANCE LTD	000000022751671	3,747.25	GAXI-7520000-000000282887-1	5	01	0	81500	0	00000	81100	4310	7520000	80.21
HD SUPPLY FACILITIES MAINTENANCE LTD	000000022751671	3,747.25	GAXI-7520000-000000282888-1	6	01	0	81500	0	00000	81100	4310	7520000	222.04
HD SUPPLY FACILITIES MAINTENANCE LTD	000000022751671	3,747.25	GAXI-7520000-000000282889-1	7	01	0	81500	0	00000	81100	4310	7520000	142.55
HD SUPPLY FACILITIES MAINTENANCE LTD	000000022751671	3,747.25	GAXI-7520000-000000282884-1	2	01	0	81500	0	00000	81100	4310	7520000	129.48
HD SUPPLY FACILITIES MAINTENANCE LTD	000000022751671	3,747.25	GAXI-7520000-000000282883-1	1	01	0	81500	0	00000	81100	4310	7520000	37.27
HD SUPPLY FACILITIES MAINTENANCE LTD	000000022751671	3,747.25	GAXI-7520000-000000282891-1	9	01	0	81500	0	00000	81100	4310	7520000	70.81
HD SUPPLY FACILITIES MAINTENANCE LTD	000000022751671	3,747.25	GAXI-7520000-000000282890-1	8	01	0	81500	0	00000	81100	4310	7520000	82.78
HD SUPPLY FACILITIES MAINTENANCE LTD	000000022751671	3,747.25	GAXI-7520000-000000282892-1	10	01	0	81500	0	00000	81100	4310	7520000	105.68
HD SUPPLY FACILITIES MAINTENANCE LTD	000000022751671	3,747.25	GAXI-7520000-000000282924-1	11	01	0	81500	0	00000	81100	4310	7520000	66.32
HD SUPPLY FACILITIES MAINTENANCE LTD	000000022751671	3,747.25	GAXI-7520000-000000282926-1	13	01	0	81500	0	00000	81100	4310	7520000	61.63
HD SUPPLY FACILITIES MAINTENANCE LTD	000000022751671	3,747.25	GAXI-7520000-000000282925-1	12	01	0	81500	0	00000	81100	4310	7520000	638.69
HD SUPPLY FACILITIES MAINTENANCE LTD	000000022751671	3,747.25	GAXI-7520000-000000282929-1	15	01	0	81500	0	00000	81100	4310	7520000	310.18
HD SUPPLY FACILITIES MAINTENANCE LTD	000000022751671	3,747.25	GAXI-7520000-000000282927-1	14	01	0	81500	0	00000	81100	4310	7520000	284.30
HD SUPPLY FACILITIES MAINTENANCE LTD	000000022751671	3,747.25	GAXI-7520000-000000282930-1	16	01	0	81500	0	00000	81100	4310	7520000	45.24
HD SUPPLY FACILITIES MAINTENANCE LTD	000000022751671	3,747.25	GAXI-7520000-000000282931-1	17	01	0	81500	0	00000	81100	4310	7520000	139.12
HD SUPPLY FACILITIES MAINTENANCE LTD	000000022751671	3,747.25	GAXI-7520000-000000282932-1	18	01	0	81500	0	00000	81100	4310	7520000	828.69
HD SUPPLY FACILITIES MAINTENANCE LTD	000000022751671	3,747.25	GAXI-7520000-000000282933-1	19	01	0	81500	0	00000	81100	4310	7520000	166.83
HD SUPPLY FACILITIES MAINTENANCE LTD	000000022766007	905.40	GAXI-7520000-000000283544-1	1	01	0	81500	0	00000	81100	4310	7520000	76.29
HD SUPPLY FACILITIES MAINTENANCE LTD	000000022766007	905.40	GAXI-7520000-000000283545-1	2	01	0	81500	0	00000	81100	4310	7520000	115.35
HD SUPPLY FACILITIES MAINTENANCE LTD	000000022766007	905.40	GAXI-7520000-000000283546-1	3	01	0	81500	0	00000	81100	4310	7520000	102.72
HD SUPPLY FACILITIES MAINTENANCE LTD	000000022766007	905.40	GAXI-7520000-000000283547-1	4	01	0	81500	0	00000	81100	4310	7520000	593.39
HD SUPPLY FACILITIES MAINTENANCE LTD	000000022766007	905.40	GAXI-7520000-000000283548-1	5	01	0	81500	0	00000	81100	4310	7520000	17.65
HEALTH CONNECTED	000000022771270	1,077.41	GAXI-7420000-000000283646-1	1	01	0	63000	0	11100	10000	4210	7420000	1,077.41
HECTOR GARCIA	000000022749214	66.15	GAXI-7450000-000000282838-1	1	01	0	00000	0	00000	72000	5210	7450000	66.15
HELENE K MARTE	202605260583980	1,269.81	GAXI-0000000-000000283273-1	1	67	0	00000	0	00000	60000	5810	0000000	1,269.81
HELP GROUP	000000022728885	50,293.32	GAXI-7440000-000000281854-1	1	01	0	65000	0	57601	11800	5810	7440000	5,428.77
HELP GROUP	000000022728885	50,293.32	GAXI-7440000-000000281857-1	4	01	0	65460	0	57601	11800	5810	7440000	1,757.71
HELP GROUP	000000022728885	50,293.32	GAXI-7440000-000000281859-1	6	01	0	65000	0	57601	11800	5810	7440000	17,085.55
HELP GROUP	000000022728885	50,293.32	GAXI-7440000-000000281858-1	5	01	0	65000	0	57601	11800	5810	7440000	4,930.59
HELP GROUP	000000022728885	50,293.32	GAXI-7440000-000000281855-1	2	01	0	65000	0	57601	11800	5810	7440000	7,454.25
HELP GROUP	000000022728885	50,293.32	GAXI-7440000-000000281856-1	3	01	0	65460	0	57601	11800	5810	7440000	265.26
HELP GROUP	000000022728885	50,293.32	GAXI-7440000-000000281861-1	8	01	0	65000	0	57601	11800	5810	7440000	11,764.74
HELP GROUP	000000022728885	50,293.32	GAXI-7440000-000000281860-1	7	01	0	65460	0	57601	11800	5810	7440000	1,606.45
HELP GROUP	000000022739043	19,717.50	GAXI-7440000-000000282391-1	1	01	0	65000	0	57601	11800	5810	7440000	17,168.10
HELP GROUP	000000022739043	19,717.50	GAXI-7440000-000000282391-1	2	01	0	65460	0	57601	11800	5810	7440000	2,549.40
HENRY WALLACE ALEXANDER JR	202605210582567	807.05	GAXI-0000000-000000283122-1	1	67	0	00000	0	00000	60000	5810	0000000	807.05
HERFF JONES INC	000000022728886	3,948.83	GAXI-4310000-000000281622-1	1	01	0	00000	0	11100	10000	4310	4310000	3,948.83
H & H AUTO PARTS WHOLESALE	000000022749212	204.73	GAXI-7520000-000000282824-1	1	01	0	81500	0	00000	81100	4310	7520000	204.73
HOLA CLINIC BILINGUAL SPEECH LANGUAGE PATHOLOGY IN	000000022739044	450.00	GAXI-7440000-000000282554-1	1	01	0	65000	0	57602	11901	5850	7440000	450.00
HOLDING HANDS, BURBANK	000000022758864	21,503.03	GAXI-7440000-000000283162-1	1	01	0	65000	0	57601	11804	5810	7440000	5,981.47
HOLDING HANDS, BURBANK	000000022758864	21,503.03	GAXI-7440000-000000283163-1	2	01	0	65000	0	57601	11804	5810	7440000	8,004.22
HOLDING HANDS, BURBANK	000000022758864	21,503.03	GAXI-7440000-000000283164-1	3	01	0	65000	0	57601	11804	5810	7440000	7,517.34
HOPE 4 FAMILIES LAW	000000022728887	13,900.00	GAXI-7440000-000000278962-1	1	01	0	65000	0	50010	21000	5820	7440000	13,900.00
HOUGHTON MIFFLIN	000000022736660	198.71	GAXI-2090000-000000282495-1	1	01	0	42030	1	47600	10000	4310	2090000	198.71
HOUGHTON MIFFLIN	000000022733998	1,872.97	GAXI-7420000-000000282251-1	1	01	0	63000	0	11100	10000	4110	7420000	1,872.97
IAN LEPATAN	202605260583979	825.69	GAXI-0000000-000000283261-1	1	67	0	00000	0	00000	60000	5810	0000000	825.69
ICAN-B	000000022749215	14,718.50	GAXI-7440000-000000282599-1	1	01	0	65000	0	57601	11804	5810	7440000	1,682.75
ICAN-B	000000022749215	14,718.50	GAXI-7440000-000000282600-1	2	01	0	65000	0	57601	11804	5810	7440000	1,169.53
ICAN-B	000000022749215	14,718.50	GAXI-7440000-000000282601-1	3	01	0	65000	0	57601	11804	5810	7440000	3,504.18
ICAN-B	000000022749215	14,718.50	GAXI-7440000-000000282602-1	4	01	0	65000	0	57601	11804	5810	7440000	8,362.04
ICAN-B	000000022751672	397.50	GAXI-7440000-000000282894-1	1	01	0	65000	0	57601	11804	5810	7440000	397.50
ICAN-B	000000022761259	2,868.18	GAXI-7440000-000000283246-1	1	01	0	65000	0	57601	11804	5810	7440000	2,868.18

Vendor Name	Warrant Number	Warrant Amount	Payment Doc ID	Accounting Line No.	Fund	Sub-Fund	Resource	Project Year	Goal/Categorical	Function/Activity	Object	School Location/Dept	Line Amount
ICS SERVICE CO.	000000022749216	300.00	GAXI-7520000-000000282825-1	1	01	0	00100	0	00000	83000	5850	7520000	300.00
IHEARTMEDIA	000000022751673	2,000.00	GAXI-5330000-000000282958-1	1	11	0	63910	0	41101	27000	5850	5330000	355.11
IHEARTMEDIA	000000022751673	2,000.00	GAXI-5330000-000000282958-1	2	11	0	63910	0	41102	27000	5850	5330000	355.11
IHEARTMEDIA	000000022751673	2,000.00	GAXI-5330000-000000282958-1	3	11	0	63910	0	41104	27000	5850	5330000	355.11
IHEARTMEDIA	000000022751673	2,000.00	GAXI-5330000-000000282958-1	4	11	0	63910	0	41106	27000	5850	5330000	355.11
IHEARTMEDIA	000000022751673	2,000.00	GAXI-5330000-000000282958-1	5	11	0	63910	0	41101	27000	5810	5330000	144.89
IHEARTMEDIA	000000022751673	2,000.00	GAXI-5330000-000000282958-1	6	11	0	63910	0	41102	27000	5810	5330000	144.89
IHEARTMEDIA	000000022751673	2,000.00	GAXI-5330000-000000282958-1	7	11	0	63910	0	41104	27000	5810	5330000	144.89
IHEARTMEDIA	000000022751673	2,000.00	GAXI-5330000-000000282958-1	8	11	0	63910	0	41106	27000	5810	5330000	144.89
IMAGINATION PLAYGROUND LLC	000000022761260	4,442.48	GAXI-7460000-000000283416-1	1	01	0	90202	0	11100	10000	4310	7460000	4,442.48
IMPERIAL DADE	000000022733999	8,708.64	GAXI-7490000-000000282261-1	7	13	0	53100	0	00000	37000	4310	7490000	417.18
IMPERIAL DADE	000000022733999	8,708.64	GAXI-7490000-000000282264-1	8	13	0	53100	0	00000	37000	4310	7490000	324.35
IMPERIAL DADE	000000022733999	8,708.64	GAXI-7490000-000000282266-1	9	13	0	53100	0	00000	37000	4310	7490000	551.43
IMPERIAL DADE	000000022733999	8,708.64	GAXI-7490000-000000282268-1	10	13	0	53100	0	00000	37000	4310	7490000	374.37
IMPERIAL DADE	000000022733999	8,708.64	GAXI-7490000-000000282269-1	11	13	0	53100	0	00000	37000	4310	7490000	86.45
IMPERIAL DADE	000000022733999	8,708.64	GAXI-7490000-000000282270-1	12	13	0	53100	0	00000	37000	4310	7490000	1,584.75
IMPERIAL DADE	000000022733999	8,708.64	GAXI-7490000-000000282252-1	1	13	0	53100	0	00000	37000	4310	7490000	993.65
IMPERIAL DADE	000000022733999	8,708.64	GAXI-7490000-000000282253-1	2	13	0	53100	0	00000	37000	4310	7490000	301.56
IMPERIAL DADE	000000022733999	8,708.64	GAXI-7490000-000000282254-1	3	13	0	53100	0	00000	37000	4310	7490000	767.27
IMPERIAL DADE	000000022733999	8,708.64	GAXI-7490000-000000282255-1	4	13	0	53100	0	00000	37000	4310	7490000	678.57
IMPERIAL DADE	000000022733999	8,708.64	GAXI-7490000-000000282257-1	5	13	0	53100	0	00000	37000	4310	7490000	2,432.55
IMPERIAL DADE	000000022733999	8,708.64	GAXI-7490000-000000282258-1	6	13	0	53100	0	00000	37000	4310	7490000	196.51
IMPERIAL DADE	000000022761261	7,623.28	GAXI-7490000-000000283226-1	1	13	0	53100	0	00000	37000	4310	7490000	2,895.15
IMPERIAL DADE	000000022761261	7,623.28	GAXI-7490000-000000283227-1	2	13	0	53100	0	00000	37000	4310	7490000	78.39
IMPERIAL DADE	000000022761261	7,623.28	GAXI-7490000-000000283229-1	3	13	0	53100	0	00000	37000	4310	7490000	1,465.24
IMPERIAL DADE	000000022761261	7,623.28	GAXI-7490000-000000283231-1	4	13	0	53100	0	00000	37000	4310	7490000	235.20
IMPERIAL DADE	000000022761261	7,623.28	GAXI-7490000-000000283232-1	5	13	0	53100	0	00000	37000	4310	7490000	936.49
IMPERIAL DADE	000000022761261	7,623.28	GAXI-7490000-000000283234-1	6	13	0	53100	0	00000	37000	4310	7490000	280.47
IMPERIAL DADE	000000022761261	7,623.28	GAXI-7490000-000000283236-1	7	13	0	53100	0	00000	37000	4310	7490000	574.50
IMPERIAL DADE	000000022761261	7,623.28	GAXI-7490000-000000283239-1	8	13	0	53100	0	00000	37000	4310	7490000	759.42
IMPERIAL DADE	000000022761261	7,623.28	GAXI-7490000-000000283240-1	9	13	0	53100	0	00000	37000	4310	7490000	350.53
IMPERIAL DADE	000000022761261	7,623.28	GAXI-7490000-000000283241-1	10	13	0	53100	0	00000	37000	4310	7490000	47.89
INFINITY BACKFLOW & PLUMBNG SERVICE	000000022766008	765.86	GAXI-7520000-000000283538-1	1	01	0	81500	0	00000	81100	5631	7520000	765.86
INSTITUTE FOR EDUCATIONAL DEVELOPMENT	000000022756402	275.00	GAXI-7440000-000000282951-1	1	01	0	95640	0	50010	21000	5220	7440000	275.00
INTERMOUNTAIN LOCK AND SECURITY SUPPLY	000000022731268	1,727.90	GAXI-7520000-000000281965-1	1	01	0	81500	0	00000	81100	4310	7520000	1,543.96
INTERMOUNTAIN LOCK AND SECURITY SUPPLY	000000022731268	1,727.90	GAXI-7520000-000000281966-1	2	01	0	81500	0	00000	81100	4310	7520000	9.26
INTERMOUNTAIN LOCK AND SECURITY SUPPLY	000000022731268	1,727.90	GAXI-7520000-000000281967-1	3	01	0	81500	0	00000	81100	4310	7520000	40.40
INTERMOUNTAIN LOCK AND SECURITY SUPPLY	000000022731268	1,727.90	GAXI-7520000-000000281969-1	5	01	0	81500	0	00000	81100	4310	7520000	42.42
INTERMOUNTAIN LOCK AND SECURITY SUPPLY	000000022731268	1,727.90	GAXI-7520000-000000281968-1	4	01	0	81500	0	00000	81100	4310	7520000	91.86
INTERMOUNTAIN LOCK AND SECURITY SUPPLY	000000022771271	742.55	GAXI-7520000-000000283838-1	1	01	0	81500	0	00000	81100	4310	7520000	547.61
INTERMOUNTAIN LOCK AND SECURITY SUPPLY	000000022771271	742.55	GAXI-7520000-000000283840-1	2	01	0	81500	0	00000	81100	4310	7520000	194.94
IN TOUCH BEHAVIORAL SERVICES, LLC	000000022749217	72,864.36	GAXI-7440000-000000282798-1	1	01	0	65000	0	57601	11804	5810	7440000	72,864.36
ISMAEL LOPEZ	202605260584005	807.05	GAXI-0000000-000000283267-1	1	67	0	00000	0	00000	60000	5810	0000000	807.05
IXL LEARNING	000000022771272	16,875.00	GAXI-3210000-000000283835-1	1	01	0	30100	2	11100	10000	5840	3210000	16,875.00
JACKIE DAVIS	202605270584531	1,269.81	GAXI-0000000-000000283158-1	1	67	0	00000	0	00000	60000	5810	0000000	1,269.81
JACKIE DAVIS	202604300574021	1,269.81	GAXI-0000000-000000281204-1	1	67	0	00000	0	00000	60000	5810	0000000	1,269.81
JAMES C. DEKAY	202605270584540	1,248.29	GAXI-0000000-000000283202-1	1	67	0	00000	0	00000	60000	5810	0000000	1,248.29
JAMES C. DEKAY	202604300574023	1,248.29	GAXI-0000000-000000281212-1	1	67	0	00000	0	00000	60000	5810	0000000	1,248.29
JAMIE ANDREWS	202605260583968	755.91	GAXI-0000000-000000283123-1	1	67	0	00000	0	00000	60000	5810	0000000	755.91
JANE ANNE SINGER	000000022768174	825.69	GAXI-0000000-000000283337-1	1	67	0	00000	0	00000	60000	5810	0000000	825.69
JANET LAM-ZIEGLER	202605260584011	1,269.81	GAXI-0000000-000000283258-1	1	67	0	00000	0	00000	60000	5810	0000000	1,269.81
JANET MCKENNA	202605260583996	807.05	GAXI-0000000-000000283277-1	1	67	0	00000	0	00000	60000	5810	0000000	807.05
JANICE GRESHAM	202605270584544	1,269.81	GAXI-0000000-000000283235-1	1	67	0	00000	0	00000	60000	5810	0000000	1,269.81
JANICE L BUROW	202605260584017	807.05	GAXI-0000000-000000283140-1	1	67	0	00000	0	00000	60000	5810	0000000	807.05
JASMAN SEPRAKI	202605260583972	755.91	GAXI-0000000-000000283225-1	1	67	0	00000	0	00000	60000	5810	0000000	755.91
JAYME EVE ADELSON- GOLDSTEIN	000000022749218	450.00	GAXI-5330000-000000282836-1	1	11	0	63910	0	41102	10000	5810	5330000	450.00
JEFFREY HERB THOMPSON	202605270584505	807.05	GAXI-0000000-000000283342-1	1	67	0	00000	0	00000	60000	5810	0000000	807.05
JERMAN AVANISIAN	202605260583969	755.91	GAXI-0000000-000000283128-1	1	67	0	00000	0	00000	60000	5810	0000000	755.91
JOANNE VALLONE	202605270584466	319.29	GAXI-0000000-000000283347-1	1	67	0	00000	0	00000	60000	5810	0000000	319.29

Vendor Name	Warrant Number	Warrant Amount	Payment Doc ID	Accounting Line No.	Fund	Sub-Fund	Resource	Project Year	Goal/Categorical	Function/Activity	Object	School Location/Dept	Line Amount
JOHN KLEIN	202605260583991	1,248.29	GAXI-0000000-000000283255-1	1	67	0	00000	0	00000	60000	5810	0000000	1,248.29
JOHNSTONE SUPPLY	000000022731269	536.26	GAXI-7520000-000000281970-1	1	01	0	81500	0	00000	81100	4310	7520000	87.80
JOHNSTONE SUPPLY	000000022731269	536.26	GAXI-7520000-000000281971-1	2	01	0	81500	0	00000	81100	4310	7520000	448.46
JOHNSTONE SUPPLY	000000022766009	1,348.69	GAXI-7520000-000000283511-1	1	01	0	81500	0	00000	81100	4310	7520000	455.68
JOHNSTONE SUPPLY	000000022766009	1,348.69	GAXI-7520000-000000283512-1	2	01	0	81500	0	00000	81100	4310	7520000	466.84
JOHNSTONE SUPPLY	000000022766009	1,348.69	GAXI-7520000-000000283513-1	3	01	0	81500	0	00000	81100	4310	7520000	426.17
JOLLY LEARNING LIMITED	000000022728888	1,055.07	GAXI-7420000-000000281628-1	1	01	0	00000	0	11100	10000	4310	7420000	1,055.07
JONES SCHOOL SUPPLY CO., INC.	000000022766010	196.75	GAXI-4320000-000000283590-1	1	01	0	00000	0	11100	10000	4310	4320000	196.75
JOSE JULIAN RODRIGUEZ	202605260584008	127.00	GAXI-0000000-000000283306-1	1	67	0	00000	0	00000	60000	5810	0000000	127.00
JOSE ONTIVEROS	202605270584519	377.43	GAXI-0000000-000000283295-1	1	67	0	00000	0	00000	60000	5810	0000000	377.43
JOSE ONTIVEROS	202604300574015	377.43	GAXI-0000000-000000281594-1	1	67	0	00000	0	00000	60000	5810	0000000	377.43
JOSEPH BOYD	202605260583982	1,396.00	GAXI-0000000-000000283134-1	1	67	0	00000	0	00000	60000	5810	0000000	1,396.00
JOSE ROBERTO RODRIGUEZ VILLATA	202605270584541	194.83	GAXI-0000000-000000283349-1	1	67	0	00000	0	00000	60000	5810	0000000	194.83
JOSTENS, INC.	000000022746733	3,577.11	GAXI-4320000-000000282728-1	1	01	0	00000	0	11100	10000	4310	4320000	28.84
JOSTENS, INC.	000000022746733	3,577.11	GAXI-4320000-000000282729-1	2	01	0	00000	0	11100	10000	4310	4320000	3,548.27
JOY YOUNG	000000022728889	18,480.00	GAXI-7440000-000000281811-1	1	01	0	65000	0	57601	11804	5810	7440000	18,480.00
JPMORGAN CHASE BANK	202605280585339	41,446.83	GAXI-7520000-000000283667-1	9	01	0	81500	0	00000	81100	4310	7520000	456.47
JPMORGAN CHASE BANK	202605280585339	41,446.83	GAXI-5330000-000000283742-1	80	11	0	63910	0	41100	27000	4310	5330000	1,170.00
JPMORGAN CHASE BANK	202605280585339	41,446.83	GAXI-5330000-000000283743-1	81	11	0	63910	0	41100	27000	4310	5330000	17.37
JPMORGAN CHASE BANK	202605280585339	41,446.83	GAXI-5330000-000000283745-1	82	11	0	63910	0	41100	27000	4310	5330000	59.10
JPMORGAN CHASE BANK	202605280585339	41,446.83	GAXI-3220000-000000283746-1	83	01	0	00000	0	11100	10000	4310	3220000	57.78
JPMORGAN CHASE BANK	202605280585339	41,446.83	GAXI-5330000-000000283747-1	84	11	0	63910	0	41100	27000	4310	5330000	48.10
JPMORGAN CHASE BANK	202605280585339	41,446.83	GAXI-3220000-000000283670-1	10	01	0	00000	0	11100	10000	4310	3220000	513.87
JPMORGAN CHASE BANK	202605280585339	41,446.83	GAXI-7540000-000000283748-1	85	12	0	90602	0	11100	10000	4310	7540000	36.06
JPMORGAN CHASE BANK	202605280585339	41,446.83	GAXI-7540000-000000283751-1	86	12	0	90602	0	11100	10000	4310	7540000	182.54
JPMORGAN CHASE BANK	202605280585339	41,446.83	GAXI-7540000-000000283753-1	87	12	0	90602	0	11100	10000	4310	7540000	303.62
JPMORGAN CHASE BANK	202605280585339	41,446.83	GAXI-3220000-000000283754-1	88	01	0	00000	0	11100	10000	4310	3220000	44.00
JPMORGAN CHASE BANK	202605280585339	41,446.83	GAXI-2030000-000000283756-1	89	01	0	90870	0	11100	10000	4310	2030000	38.57
JPMORGAN CHASE BANK	202605280585339	41,446.83	GAXI-5330000-000000283758-1	90	11	0	63910	0	41100	27000	4310	5330000	20.77
JPMORGAN CHASE BANK	202605280585339	41,446.83	GAXI-2030000-000000283759-1	91	01	0	90870	0	11100	10000	4310	2030000	62.93
JPMORGAN CHASE BANK	202605280585339	41,446.83	GAXI-7490000-000000283761-1	92	13	0	53100	0	00000	37000	4310	7490000	48.00
JPMORGAN CHASE BANK	202605280585339	41,446.83	GAXI-7520000-000000283762-1	93	01	0	81500	0	00000	81100	5880	7520000	225.00
JPMORGAN CHASE BANK	202605280585339	41,446.83	GAXI-7520000-000000283765-1	94	01	0	81500	0	00000	81100	5880	7520000	225.00
JPMORGAN CHASE BANK	202605280585339	41,446.83	GAXI-3220000-000000283671-1	11	01	0	00000	0	11100	10000	4310	3220000	654.88
JPMORGAN CHASE BANK	202605280585339	41,446.83	GAXI-7520000-000000283767-1	95	01	0	81500	0	00000	81100	5880	7520000	225.00
JPMORGAN CHASE BANK	202605280585339	41,446.83	GAXI-7520000-000000283769-1	96	01	0	81500	0	00000	81100	5880	7520000	5.18
JPMORGAN CHASE BANK	202605280585339	41,446.83	GAXI-7520000-000000283770-1	97	01	0	81500	0	00000	81100	5880	7520000	5.18
JPMORGAN CHASE BANK	202605280585339	41,446.83	GAXI-7520000-000000283772-1	98	01	0	81500	0	00000	81100	5880	7520000	5.18
JPMORGAN CHASE BANK	202605280585339	41,446.83	GAXI-7440000-000000283777-1	99	01	0	65200	0	50010	21000	5220	7440000	571.66
JPMORGAN CHASE BANK	202605280585339	41,446.83	GAXI-7440000-000000283779-1	100	01	0	65200	0	50010	21000	5220	7440000	571.66
JPMORGAN CHASE BANK	202605280585339	41,446.83	GAXI-2130000-000000283780-1	101	01	0	00000	0	11100	10000	4310	2130000	83.98
JPMORGAN CHASE BANK	202605280585339	41,446.83	GAXI-2090000-000000283784-1	102	01	0	00000	0	11100	10000	4310	2090000	399.08
JPMORGAN CHASE BANK	202605280585339	41,446.83	GAXI-2090000-000000283785-1	103	01	0	00000	0	11100	10000	4310	2090000	166.48
JPMORGAN CHASE BANK	202605280585339	41,446.83	GAXI-2090000-000000283787-1	104	01	0	00000	0	11100	10000	4310	2090000	545.38
JPMORGAN CHASE BANK	202605280585339	41,446.83	GAXI-3220000-000000283672-1	12	01	0	00000	0	11100	10000	4310	3220000	654.88
JPMORGAN CHASE BANK	202605280585339	41,446.83	GAXI-5330000-000000283788-1	105	11	0	63910	0	41100	27000	4310	5330000	32.16
JPMORGAN CHASE BANK	202605280585339	41,446.83	GAXI-5330000-000000283789-1	106	11	0	63910	0	41100	27000	4310	5330000	42.57
JPMORGAN CHASE BANK	202605280585339	41,446.83	GAXI-7460000-000000283793-1	107	01	0	63870	0	38000	10000	4395	7460000	1,526.22
JPMORGAN CHASE BANK	202605280585339	41,446.83	GAXI-7450000-000000283794-1	108	01	0	30100	2	00000	72000	5880	7450000	100.00
JPMORGAN CHASE BANK	202605280585339	41,446.83	GAXI-2090000-000000283795-1	109	01	0	00000	0	11100	10000	4310	2090000	428.00
JPMORGAN CHASE BANK	202605280585339	41,446.83	GAXI-5330000-000000283796-1	110	11	0	63910	0	41100	27000	4310	5330000	31.90
JPMORGAN CHASE BANK	202605280585339	41,446.83	GAXI-7520000-000000283797-1	111	01	0	81500	0	00000	81100	4310	7520000	138.13
JPMORGAN CHASE BANK	202605280585339	41,446.83	GAXI-3220000-000000283798-1	112	01	0	00000	0	11100	10000	4310	3220000	66.00
JPMORGAN CHASE BANK	202605280585339	41,446.83	GAXI-3220000-000000283673-1	13	01	0	00000	0	11100	10000	4310	3220000	654.88
JPMORGAN CHASE BANK	202605280585339	41,446.83	GAXI-3220000-000000283799-1	113	01	0	00000	0	11100	10000	4310	3220000	40.00
JPMORGAN CHASE BANK	202605280585339	41,446.83	GAXI-7460000-000000283800-1	114	01	0	90711	0	11100	10000	4410	7460000	1,771.32
JPMORGAN CHASE BANK	202605280585339	41,446.83	GAXI-7470000-000000283801-1	115	01	0	00000	0	00000	72000	4310	7470000	105.54
JPMORGAN CHASE BANK	202605280585339	41,446.83	GAXI-2090000-000000283802-1	116	01	0	00000	0	11100	10000	4310	2090000	556.65
JPMORGAN CHASE BANK	202605280585339	41,446.83	GAXI-7520000-000000283803-1	117	01	0	81500	0	00000	81100	4310	7520000	156.56

Vendor Name	Warrant Number	Warrant Amount	Payment Doc ID	Accounting Line No.	Fund	Sub-Fund	Resource	Project Year	Goal/Categorical	Function/Activity	Object	School Location/Dept	Line Amount
JPMORGAN CHASE BANK	202605280585339	41,446.83	GAXI-7520000-000000283804-1	118	01	0	81500	0	00000	81100	4310	7520000	156.56
JPMORGAN CHASE BANK	202605280585339	41,446.83	GAXI-7540000-000000283805-1	119	12	0	90602	0	11100	10000	4310	7540000	401.45
JPMORGAN CHASE BANK	202605280585339	41,446.83	GAXI-2010000-000000283806-1	120	01	0	30100	2	11100	10000	4310	2010000	55.25
JPMORGAN CHASE BANK	202605280585339	41,446.83	GAXI-3220000-000000283674-1	14	01	0	00000	0	11100	10000	4310	3220000	654.88
JPMORGAN CHASE BANK	202605280585339	41,446.83	GAXI-2090000-000000283807-1	121	01	0	00000	0	11100	10000	4310	2090000	36.65
JPMORGAN CHASE BANK	202605280585339	41,446.83	GAXI-5330000-000000283808-1	122	11	0	63910	0	41100	27000	4310	5330000	89.15
JPMORGAN CHASE BANK	202605280585339	41,446.83	GAXI-7520000-000000283809-1	123	01	0	81500	0	00000	81100	4310	7520000	156.56
JPMORGAN CHASE BANK	202605280585339	41,446.83	GAXI-2020000-000000283810-1	124	01	0	90870	0	11100	10000	4310	2020000	769.10
JPMORGAN CHASE BANK	202605280585339	41,446.83	GAXI-5330000-000000283812-1	125	11	0	63910	0	41100	27000	4310	5330000	1,572.96
JPMORGAN CHASE BANK	202605280585339	41,446.83	GAXI-5330000-000000283813-1	126	11	0	63910	0	41100	27000	4310	5330000	17.68
JPMORGAN CHASE BANK	202605280585339	41,446.83	GAXI-3220000-000000283815-1	127	01	0	00000	0	11100	10000	4310	3220000	134.34
JPMORGAN CHASE BANK	202605280585339	41,446.83	GAXI-3220000-000000283675-1	15	01	0	00000	0	11100	10000	4310	3220000	654.88
JPMORGAN CHASE BANK	202605280585339	41,446.83	GAXI-7540000-000000283816-1	128	12	0	90602	0	11100	10000	4310	7540000	663.69
JPMORGAN CHASE BANK	202605280585339	41,446.83	GAXI-5330000-000000283817-1	129	11	0	63910	0	41100	27000	4310	5330000	33.35
JPMORGAN CHASE BANK	202605280585339	41,446.83	GAXI-3220000-000000283676-1	16	01	0	00000	0	11100	10000	4310	3220000	654.88
JPMORGAN CHASE BANK	202605280585339	41,446.83	GAXI-3220000-000000283677-1	17	01	0	00000	0	11100	10000	4310	3220000	656.88
JPMORGAN CHASE BANK	202605280585339	41,446.83	GAXI-3220000-000000283678-1	18	01	0	00000	0	11100	10000	4310	3220000	4,152.00
JPMORGAN CHASE BANK	202605280585339	41,446.83	GAXI-7490000-000000283658-1	1	13	0	53100	0	00000	37000	4310	7490000	28.73
JPMORGAN CHASE BANK	202605280585339	41,446.83	GAXI-7490000-000000283679-1	19	13	0	53100	0	00000	37000	4310	7490000	143.65
JPMORGAN CHASE BANK	202605280585339	41,446.83	GAXI-5330000-000000283680-1	20	11	0	63910	0	41100	27000	4310	5330000	158.98
JPMORGAN CHASE BANK	202605280585339	41,446.83	GAXI-7520000-000000283681-1	21	01	0	81500	0	00000	81100	4310	7520000	50.00
JPMORGAN CHASE BANK	202605280585339	41,446.83	GAXI-3220000-000000283682-1	22	01	0	00000	0	11100	10000	4310	3220000	143.71
JPMORGAN CHASE BANK	202605280585339	41,446.83	GAXI-7490000-000000283683-1	23	13	0	53100	0	00000	37000	4310	7490000	-143.65
JPMORGAN CHASE BANK	202605280585339	41,446.83	GAXI-2020000-000000283684-1	24	01	0	90704	0	11100	10000	4310	2020000	-198.89
JPMORGAN CHASE BANK	202605280585339	41,446.83	GAXI-7490000-000000283685-1	25	13	0	53100	0	00000	37000	4310	7490000	575.00
JPMORGAN CHASE BANK	202605280585339	41,446.83	GAXI-7540000-000000283686-1	26	12	0	90602	0	11100	10000	4310	7540000	171.36
JPMORGAN CHASE BANK	202605280585339	41,446.83	GAXI-3220000-000000283687-1	27	01	0	00000	0	11100	10000	4310	3220000	93.29
JPMORGAN CHASE BANK	202605280585339	41,446.83	GAXI-7490000-000000283688-1	28	13	0	53100	0	00000	37000	4310	7490000	276.82
JPMORGAN CHASE BANK	202605280585339	41,446.83	GAXI-2050000-000000283659-1	2	01	0	00000	0	11100	10000	4310	2050000	55.02
JPMORGAN CHASE BANK	202605280585339	41,446.83	GAXI-7490000-000000283689-1	29	13	0	53100	0	00000	37000	4310	7490000	143.65
JPMORGAN CHASE BANK	202605280585339	41,446.83	GAXI-7440000-000000283690-1	30	01	0	58100	0	57602	11100	4310	7440000	300.00
JPMORGAN CHASE BANK	202605280585339	41,446.83	GAXI-2010000-000000283691-1	31	01	0	30100	2	11100	10000	4210	2010000	425.92
JPMORGAN CHASE BANK	202605280585339	41,446.83	GAXI-5330000-000000283692-1	32	11	0	63910	0	41100	27000	4310	5330000	62.99
JPMORGAN CHASE BANK	202605280585339	41,446.83	GAXI-7440000-000000283693-1	33	01	0	58100	0	57602	11100	4310	7440000	100.00
JPMORGAN CHASE BANK	202605280585339	41,446.83	GAXI-7440000-000000283694-1	34	01	0	58100	0	57602	11100	4310	7440000	100.00
JPMORGAN CHASE BANK	202605280585339	41,446.83	GAXI-7440000-000000283695-1	35	01	0	58100	0	57602	11100	4310	7440000	25.00
JPMORGAN CHASE BANK	202605280585339	41,446.83	GAXI-7440000-000000283696-1	36	01	0	58100	0	57602	11100	4310	7440000	50.00
JPMORGAN CHASE BANK	202605280585339	41,446.83	GAXI-7440000-000000283697-1	37	01	0	58100	0	57602	11100	4310	7440000	25.00
JPMORGAN CHASE BANK	202605280585339	41,446.83	GAXI-7540000-000000283698-1	38	12	0	90602	0	11100	10000	4310	7540000	356.50
JPMORGAN CHASE BANK	202605280585339	41,446.83	GAXI-5330000-000000283660-1	3	11	0	63910	0	41100	27000	4310	5330000	41.65
JPMORGAN CHASE BANK	202605280585339	41,446.83	GAXI-3220000-000000283699-1	39	01	0	00000	0	11100	10000	4310	3220000	86.09
JPMORGAN CHASE BANK	202605280585339	41,446.83	GAXI-7420000-000000283700-1	40	01	0	26000	0	00000	37000	4710	7420000	638.02
JPMORGAN CHASE BANK	202605280585339	41,446.83	GAXI-5330000-000000283701-1	41	11	0	63910	0	41100	27000	4310	5330000	35.25
JPMORGAN CHASE BANK	202605280585339	41,446.83	GAXI-7520000-000000283702-1	42	01	0	81500	0	00000	81100	4310	7520000	614.00
JPMORGAN CHASE BANK	202605280585339	41,446.83	GAXI-7490000-000000283703-1	43	13	0	53100	0	00000	37000	4310	7490000	27.57
JPMORGAN CHASE BANK	202605280585339	41,446.83	GAXI-2060000-000000283704-1	44	01	0	90870	0	11100	10000	4310	2060000	485.43
JPMORGAN CHASE BANK	202605280585339	41,446.83	GAXI-2060000-000000283705-1	45	01	0	90870	0	11100	10000	4310	2060000	84.54
JPMORGAN CHASE BANK	202605280585339	41,446.83	GAXI-5330000-000000283706-1	46	11	0	63910	0	41100	27000	4310	5330000	42.13
JPMORGAN CHASE BANK	202605280585339	41,446.83	GAXI-7540000-000000283707-1	47	12	0	90602	0	11100	10000	4310	7540000	321.80
JPMORGAN CHASE BANK	202605280585339	41,446.83	GAXI-7490000-000000283661-1	4	13	0	53100	0	00000	37000	4310	7490000	13.14
JPMORGAN CHASE BANK	202605280585339	41,446.83	GAXI-7540000-000000283708-1	48	12	0	90602	0	11100	10000	4310	7540000	49.09
JPMORGAN CHASE BANK	202605280585339	41,446.83	GAXI-7540000-000000283709-1	49	12	0	90602	0	11100	10000	4310	7540000	300.85
JPMORGAN CHASE BANK	202605280585339	41,446.83	GAXI-7490000-000000283710-1	50	13	0	53100	0	00000	37000	4310	7490000	22.43
JPMORGAN CHASE BANK	202605280585339	41,446.83	GAXI-2060000-000000283711-1	51	01	0	90870	0	11100	10000	4310	2060000	30.62
JPMORGAN CHASE BANK	202605280585339	41,446.83	GAXI-7420000-000000283712-1	52	01	0	00000	0	11100	10000	5220	7420000	261.00
JPMORGAN CHASE BANK	202605280585339	41,446.83	GAXI-7420000-000000283713-1	53	01	0	00000	0	11100	10000	5220	7420000	261.00
JPMORGAN CHASE BANK	202605280585339	41,446.83	GAXI-7420000-000000283714-1	54	01	0	00000	0	11100	10000	5220	7420000	261.00
JPMORGAN CHASE BANK	202605280585339	41,446.83	GAXI-7420000-000000283715-1	55	01	0	00000	0	11100	10000	5220	7420000	261.00
JPMORGAN CHASE BANK	202605280585339	41,446.83	GAXI-7420000-000000283716-1	56	01	0	00000	0	11100	10000	5220	7420000	261.00

Vendor Name	Warrant Number	Warrant Amount	Payment Doc ID	Accounting Line No.	Fund	Sub-Fund	Resource	Project Year	Goal/Categorical	Function/Activity	Object	School Location/Dept	Line Amount
JPMORGAN CHASE BANK	202605280585339	41,446.83	GAXI-7420000-000000283717-1	57	01	0	00000	0	11100	10000	5220	7420000	207.00
JPMORGAN CHASE BANK	202605280585339	41,446.83	GAXI-2020000-000000283662-1	5	01	0	90704	0	11100	10000	4310	2020000	198.89
JPMORGAN CHASE BANK	202605280585339	41,446.83	GAXI-5330000-000000283718-1	58	11	0	63910	0	41100	27000	4310	5330000	1,750.21
JPMORGAN CHASE BANK	202605280585339	41,446.83	GAXI-5330000-000000283719-1	59	11	0	63910	0	41100	27000	4310	5330000	53.41
JPMORGAN CHASE BANK	202605280585339	41,446.83	GAXI-7520000-000000283720-1	60	01	0	81500	0	00000	81100	4310	7520000	967.25
JPMORGAN CHASE BANK	202605280585339	41,446.83	GAXI-7540000-000000283721-1	61	12	0	90602	0	11100	10000	4310	7540000	424.65
JPMORGAN CHASE BANK	202605280585339	41,446.83	GAXI-2020000-000000283663-1	6	01	0	90704	0	11100	10000	4310	2020000	358.00
JPMORGAN CHASE BANK	202605280585339	41,446.83	GAXI-7490000-000000283722-1	62	13	0	53100	0	00000	37000	4310	7490000	108.33
JPMORGAN CHASE BANK	202605280585339	41,446.83	GAXI-7460000-000000283723-1	63	01	0	63870	0	38000	10000	5220	7460000	551.73
JPMORGAN CHASE BANK	202605280585339	41,446.83	GAXI-7460000-000000283724-1	64	01	0	63870	0	38000	10000	5220	7460000	551.73
JPMORGAN CHASE BANK	202605280585339	41,446.83	GAXI-7460000-000000283725-1	65	01	0	63870	0	38000	10000	5220	7460000	551.73
JPMORGAN CHASE BANK	202605280585339	41,446.83	GAXI-7460000-000000283726-1	66	01	0	63870	0	38000	10000	5220	7460000	551.73
JPMORGAN CHASE BANK	202605280585339	41,446.83	GAXI-5330000-000000283727-1	67	11	0	63910	0	41100	27000	4310	5330000	43.18
JPMORGAN CHASE BANK	202605280585339	41,446.83	GAXI-5330000-000000283728-1	68	11	0	63910	0	41100	27000	4310	5330000	49.22
JPMORGAN CHASE BANK	202605280585339	41,446.83	GAXI-7450000-000000283664-1	7	01	0	00000	0	00000	72000	5220	7450000	52.50
JPMORGAN CHASE BANK	202605280585339	41,446.83	GAXI-7540000-000000283729-1	69	12	0	90602	0	11100	10000	4310	7540000	540.70
JPMORGAN CHASE BANK	202605280585339	41,446.83	GAXI-7420000-000000283730-1	70	01	0	26000	0	00000	37000	4710	7420000	47.97
JPMORGAN CHASE BANK	202605280585339	41,446.83	GAXI-2060000-000000283733-1	71	01	0	90870	0	11100	10000	4310	2060000	433.15
JPMORGAN CHASE BANK	202605280585339	41,446.83	GAXI-2060000-000000283734-1	72	01	0	90870	0	11100	10000	4310	2060000	65.03
JPMORGAN CHASE BANK	202605280585339	41,446.83	GAXI-7450000-000000283735-1	73	01	0	30100	2	00000	72000	5880	7450000	400.00
JPMORGAN CHASE BANK	202605280585339	41,446.83	GAXI-2030000-000000283736-1	74	01	0	90870	0	11100	10000	4310	2030000	54.06
JPMORGAN CHASE BANK	202605280585339	41,446.83	GAXI-5330000-000000283737-1	75	11	0	63910	0	41100	27000	4310	5330000	17.44
JPMORGAN CHASE BANK	202605280585339	41,446.83	GAXI-5330000-000000283666-1	8	11	0	63910	0	41100	27000	4310	5330000	75.16
JPMORGAN CHASE BANK	202605280585339	41,446.83	GAXI-5330000-000000283738-1	76	11	0	63910	0	41100	27000	4310	5330000	69.21
JPMORGAN CHASE BANK	202605280585339	41,446.83	GAXI-2060000-000000283739-1	77	01	0	00000	0	11100	10000	4310	2060000	499.42
JPMORGAN CHASE BANK	202605280585339	41,446.83	GAXI-5330000-000000283740-1	78	11	0	63910	0	41100	27000	4310	5330000	33.42
JPMORGAN CHASE BANK	202605280585339	41,446.83	GAXI-5330000-000000283741-1	79	11	0	63910	0	41100	27000	4310	5330000	26.52
JPMORGAN CHASE BANK	202605280585339	41,446.83	GAXI-3220000-000000283842-1	130	01	0	00000	0	11100	10000	4310	3220000	247.83
JPMORGAN CHASE BANK	202605280585339	41,446.83	GAXI-3220000-000000283843-1	131	01	0	00000	0	11100	10000	4310	3220000	385.27
JPMORGAN CHASE BANK	202605280585339	41,446.83	GAXI-3220000-000000283844-1	132	01	0	00000	0	11100	10000	4310	3220000	682.89
JPMORGAN CHASE BANK	202605280585339	41,446.83	GAXI-3220000-000000283845-1	133	01	0	00000	0	11100	10000	4310	3220000	79.12
JPMORGAN CHASE BANK	202605280585339	41,446.83	GAXI-3220000-000000283846-1	134	01	0	00000	0	11100	10000	4310	3220000	107.29
JPMORGAN CHASE BANK	202605280585339	41,446.83	GAXI-3220000-000000283847-1	135	01	0	00000	0	11100	10000	4310	3220000	314.19
J TAYLOR EDUCATION, INC.	000000022744271	621.72	GAXI-2010000-000000282615-1	1	01	0	62660	0	47601	10000	4310	2010000	621.72
JUAN JOSE DE LEON	202605270584542	807.05	GAXI-0000000-000000283199-1	1	67	0	00000	0	00000	60000	5810	0000000	807.05
JUAN JOSE DE LEON	202604300574024	807.05	GAXI-0000000-000000281209-1	1	67	0	00000	0	00000	60000	5810	0000000	807.05
JULIE ANN GRENE	202605270584521	435.57	GAXI-0000000-000000283233-1	1	67	0	00000	0	00000	60000	5810	0000000	435.57
JULIE ANN LAMBERT	202605260583998	798.03	GAXI-0000000-000000283257-1	1	67	0	00000	0	00000	60000	5810	0000000	798.03
JULIE ARBOGAST	202605260584006	194.83	GAXI-0000000-000000283124-1	1	67	0	00000	0	00000	60000	5810	0000000	194.83
JULIE DAVIS	202605270584517	807.05	GAXI-0000000-000000283159-1	1	67	0	00000	0	00000	60000	5810	0000000	807.05
JULIE DAVIS	202604300574014	807.05	GAXI-0000000-000000281205-1	1	67	0	00000	0	00000	60000	5810	0000000	807.05
JULIO CALDERON	000000022746734	64.00	GAXI-0000000-000000282610-1	1	11	0	00639	0	41120	00000	8671	0000000	64.00
JUNKERMEIER, JOSHUA	000000022766011	294.53	GAXI-7910000-000000283581-1	1	01	0	06350	0	38000	10000	4310	7910000	294.53
KAREN DARRYN	202605270584468	1,248.29	GAXI-0000000-000000283156-1	1	67	0	00000	0	00000	60000	5810	0000000	1,248.29
KAREN DARRYN	202604300573999	1,248.29	GAXI-0000000-000000281202-1	1	67	0	00000	0	00000	60000	5810	0000000	1,248.29
KAREN KAMBOURIAN	000000022739045	3,600.00	GAXI-7440000-000000282345-1	1	01	0	65460	0	57601	11800	5810	7440000	3,600.00
KAREN KAMBOURIAN	000000022749219	3,600.00	GAXI-7440000-000000282665-1	1	01	0	65460	0	57601	11800	5810	7440000	3,600.00
KATHLEEN BECKETT	000000022736661	1,000.00	GAXI-7420000-000000282489-1	1	01	0	00000	0	11100	10000	5220	7420000	1,000.00
KATHRYN SESSINGHAUS	202605270584489	1,396.00	GAXI-0000000-000000283314-1	1	67	0	00000	0	00000	60000	5810	0000000	1,396.00
KATHY DINAPOLI	202605270584520	377.43	GAXI-0000000-000000283204-1	1	67	0	00000	0	00000	60000	5810	0000000	377.43
KATHY DINAPOLI	202604300574016	377.43	GAXI-0000000-000000281590-1	1	67	0	00000	0	00000	60000	5810	0000000	377.43
KATHY J YAEGER	202605270584480	503.50	GAXI-0000000-000000283359-1	1	67	0	00000	0	00000	60000	5810	0000000	503.50
KELLIE JEAN DI PIAZZA	202605270584546	1,269.81	GAXI-0000000-000000283468-1	2	67	0	00000	0	00000	60000	5810	0000000	766.31
KELLIE JEAN DI PIAZZA	202605270584546	1,269.81	GAXI-0000000-000000283205-1	1	67	0	00000	0	00000	60000	5810	0000000	503.50
KELLIE JEAN DI PIAZZA	202604300574025	503.50	GAXI-0000000-000000281215-1	1	67	0	00000	0	00000	60000	5810	0000000	503.50
KELLY SPICERS STORES	000000022731270	945.33	GAXI-7570000-000000282025-1	1	01	0	00000	0	00000	75500	4310	7570000	945.33
KELSEY OLSON	000000022736662	567.54	GAXI-7560000-000000282540-1	1	01	0	00000	0	00000	27000	5220	7560000	567.54
KEN BROWN	202605260583989	1,269.81	GAXI-0000000-000000283138-1	1	67	0	00000	0	00000	60000	5810	0000000	1,269.81
KIMBERLY A JOHNSON	202605260583985	807.05	GAXI-0000000-000000283251-1	1	67	0	00000	0	00000	60000	5810	0000000	807.05

Vendor Name	Warrant Number	Warrant Amount	Payment Doc ID	Accounting Line No.	Fund	Sub-Fund	Resource	Project Year	Goal/Categorical	Function/Activity	Object	School Location/Dept	Line Amount
KYLE STOLZ	000000022728890	1,650.00	GAXI-3220000-000000281383-1	1	01	0	90904	0	17006	41002	4310	3220000	1,650.00
LA CITY CAB LLC	202605040575213	24,831.00	GAXI-7440000-000000281681-1	1	01	0	07240	0	50010	36000	5812	7440000	24,831.00
LAGUNA CLAY CO	000000022741676	2,090.71	GAXI-2010000-000000282614-1	1	01	0	67700	1	11100	10000	4310	2010000	2,090.71
LAKESHORE CURRICULUM MATERIAL	000000022761262	3,394.25	GAXI-2150000-000000283455-1	3	01	0	42010	1	47600	10000	4310	2150000	240.53
LAKESHORE CURRICULUM MATERIAL	000000022761262	3,394.25	GAXI-2100000-000000283445-1	1	01	0	42010	1	47600	10000	4310	2100000	2,987.57
LAKESHORE CURRICULUM MATERIAL	000000022761262	3,394.25	GAXI-2100000-000000283446-1	2	01	0	42010	1	47600	10000	4310	2100000	166.15
LAKESHORE LEARNING	000000022761263	317.73	GAXI-2060000-000000283365-1	1	01	0	90870	0	11100	10000	4310	2060000	114.22
LAKESHORE LEARNING	000000022766012	76.34	GAXI-5080000-000000283586-1	1	01	0	65000	0	57300	27000	4310	5080000	76.34
LAKESHORE LEARNING	000000022761263	317.73	GAXI-2060000-000000283386-1	2	01	0	90870	0	11100	10000	4310	2060000	203.51
LA PARTY RENTS, INC.	000000022736663	6,812.59	GAXI-4310000-000000282313-1	2	01	0	00000	0	11100	10000	4310	4310000	3,867.41
LA PARTY RENTS, INC.	000000022736663	6,812.59	GAXI-7420000-000000281614-1	1	01	0	00000	0	11100	10000	5611	7420000	2,945.18
LAURA BAUMAN	202605260583993	194.83	GAXI-0000000-000000283132-1	1	67	0	00000	0	00000	60000	5810	0000000	194.83
LAURIE A HARMON	202605270584512	807.05	GAXI-0000000-000000283242-1	1	67	0	00000	0	00000	60000	5810	0000000	807.05
LAW OFFICE OF GEORGIANNA JUNCO-KELMAN	000000022728891	4,000.00	GAXI-7440000-000000279483-1	1	01	0	65000	0	50010	21000	5820	7440000	4,000.00
LENORA AGUILERA	000000022749220	123.90	GAXI-7720000-000000282847-1	1	01	0	00000	0	00000	31400	5210	7720000	123.90
LEO ROSENBLUM & ASSOCIATES	000000022739046	6,918.00	GAXI-7440000-000000282500-1	1	01	0	65000	0	57602	11901	5850	7440000	387.00
LEO ROSENBLUM & ASSOCIATES	000000022739046	6,918.00	GAXI-7440000-000000282508-1	5	01	0	65000	0	57602	11901	5850	7440000	387.00
LEO ROSENBLUM & ASSOCIATES	000000022739046	6,918.00	GAXI-7440000-000000282507-1	4	01	0	65000	0	57602	11901	5850	7440000	273.00
LEO ROSENBLUM & ASSOCIATES	000000022739046	6,918.00	GAXI-7440000-000000282506-1	3	01	0	65000	0	57602	11901	5850	7440000	402.00
LEO ROSENBLUM & ASSOCIATES	000000022739046	6,918.00	GAXI-7440000-000000282511-1	8	01	0	65000	0	57602	11901	5850	7440000	387.00
LEO ROSENBLUM & ASSOCIATES	000000022739046	6,918.00	GAXI-7440000-000000282502-1	2	01	0	65000	0	57602	11901	5850	7440000	387.00
LEO ROSENBLUM & ASSOCIATES	000000022739046	6,918.00	GAXI-7440000-000000282509-1	6	01	0	65000	0	57602	11901	5850	7440000	273.00
LEO ROSENBLUM & ASSOCIATES	000000022739046	6,918.00	GAXI-7440000-000000282510-1	7	01	0	65000	0	57602	11901	5850	7440000	387.00
LEO ROSENBLUM & ASSOCIATES	000000022739046	6,918.00	GAXI-7440000-000000282513-1	10	01	0	65000	0	57602	11901	5850	7440000	273.00
LEO ROSENBLUM & ASSOCIATES	000000022739046	6,918.00	GAXI-7440000-000000282512-1	9	01	0	65000	0	57602	11901	5850	7440000	273.00
LEO ROSENBLUM & ASSOCIATES	000000022739046	6,918.00	GAXI-7440000-000000282514-1	11	01	0	65000	0	57602	11901	5850	7440000	273.00
LEO ROSENBLUM & ASSOCIATES	000000022739046	6,918.00	GAXI-7440000-000000282520-1	16	01	0	65000	0	57602	11901	5850	7440000	273.00
LEO ROSENBLUM & ASSOCIATES	000000022739046	6,918.00	GAXI-7440000-000000282519-1	15	01	0	65000	0	57602	11901	5850	7440000	273.00
LEO ROSENBLUM & ASSOCIATES	000000022739046	6,918.00	GAXI-7440000-000000282518-1	14	01	0	65000	0	57602	11901	5850	7440000	273.00
LEO ROSENBLUM & ASSOCIATES	000000022739046	6,918.00	GAXI-7440000-000000282516-1	13	01	0	65000	0	57602	11901	5850	7440000	273.00
LEO ROSENBLUM & ASSOCIATES	000000022739046	6,918.00	GAXI-7440000-000000282515-1	12	01	0	65000	0	57602	11901	5850	7440000	273.00
LEO ROSENBLUM & ASSOCIATES	000000022739046	6,918.00	GAXI-7440000-000000282524-1	18	01	0	65000	0	57602	11901	5850	7440000	387.00
LEO ROSENBLUM & ASSOCIATES	000000022739046	6,918.00	GAXI-7440000-000000282523-1	17	01	0	65000	0	57602	11901	5850	7440000	273.00
LEO ROSENBLUM & ASSOCIATES	000000022739046	6,918.00	GAXI-7440000-000000282526-1	20	01	0	65000	0	57602	11901	5850	7440000	387.00
LEO ROSENBLUM & ASSOCIATES	000000022739046	6,918.00	GAXI-7440000-000000282525-1	19	01	0	65000	0	57602	11901	5850	7440000	402.00
LEO ROSENBLUM & ASSOCIATES	000000022739046	6,918.00	GAXI-7440000-000000282527-1	21	01	0	65000	0	57602	11901	5850	7440000	402.00
LEO ROSENBLUM & ASSOCIATES	000000022761264	8,160.02	GAXI-7440000-000000283371-1	4	01	0	65000	0	57602	11901	5850	7440000	402.00
LEO ROSENBLUM & ASSOCIATES	000000022761264	8,160.02	GAXI-7440000-000000283370-1	3	01	0	65000	0	57602	11901	5850	7440000	273.00
LEO ROSENBLUM & ASSOCIATES	000000022761264	8,160.02	GAXI-7440000-000000283369-1	2	01	0	65000	0	57602	11901	5850	7440000	273.00
LEO ROSENBLUM & ASSOCIATES	000000022761264	8,160.02	GAXI-7440000-000000283373-1	5	01	0	65000	0	57602	11901	5850	7440000	273.00
LEO ROSENBLUM & ASSOCIATES	000000022761264	8,160.02	GAXI-7440000-000000283374-1	6	01	0	65000	0	57602	11901	5850	7440000	387.00
LEO ROSENBLUM & ASSOCIATES	000000022761264	8,160.02	GAXI-7440000-000000283375-1	7	01	0	65000	0	57602	11901	5850	7440000	387.00
LEO ROSENBLUM & ASSOCIATES	000000022761264	8,160.02	GAXI-7440000-000000283376-1	8	01	0	65000	0	57602	11901	5850	7440000	387.00
LEO ROSENBLUM & ASSOCIATES	000000022761264	8,160.02	GAXI-7440000-000000283377-1	9	01	0	65000	0	57602	11901	5850	7440000	402.00
LEO ROSENBLUM & ASSOCIATES	000000022761264	8,160.02	GAXI-7440000-000000283368-1	1	01	0	65000	0	57602	11901	5850	7440000	273.00
LEO ROSENBLUM & ASSOCIATES	000000022761264	8,160.02	GAXI-7440000-000000283380-1	12	01	0	65000	0	57602	11901	5850	7440000	273.00
LEO ROSENBLUM & ASSOCIATES	000000022761264	8,160.02	GAXI-7440000-000000283379-1	11	01	0	65000	0	57602	11901	5850	7440000	402.00
LEO ROSENBLUM & ASSOCIATES	000000022761264	8,160.02	GAXI-7440000-000000283384-1	16	01	0	65000	0	57602	11901	5850	7440000	402.00
LEO ROSENBLUM & ASSOCIATES	000000022761264	8,160.02	GAXI-7440000-000000283383-1	15	01	0	65000	0	57602	11901	5850	7440000	402.00
LEO ROSENBLUM & ASSOCIATES	000000022761264	8,160.02	GAXI-7440000-000000283382-1	14	01	0	65000	0	57602	11901	5850	7440000	387.00
LEO ROSENBLUM & ASSOCIATES	000000022761264	8,160.02	GAXI-7440000-000000283378-1	10	01	0	65000	0	57602	11901	5850	7440000	273.00
LEO ROSENBLUM & ASSOCIATES	000000022761264	8,160.02	GAXI-7440000-000000283381-1	13	01	0	65000	0	57602	11901	5850	7440000	403.00
LEO ROSENBLUM & ASSOCIATES	000000022749221	5,077.00	GAXI-7440000-000000282668-1	3	01	0	65000	0	57602	11901	5850	7440000	273.00
LEO ROSENBLUM & ASSOCIATES	000000022749221	5,077.00	GAXI-7440000-000000282667-1	2	01	0	65000	0	57602	11901	5850	7440000	273.00
LEO ROSENBLUM & ASSOCIATES	000000022749221	5,077.00	GAXI-7440000-000000282673-1	8	01	0	65000	0	57602	11901	5850	7440000	387.00
LEO ROSENBLUM & ASSOCIATES	000000022749221	5,077.00	GAXI-7440000-000000282672-1	7	01	0	65000	0	57602	11901	5850	7440000	402.00
LEO ROSENBLUM & ASSOCIATES	000000022749221	5,077.00	GAXI-7440000-000000282674-1	9	01	0	65000	0	57602	11901	5850	7440000	387.00
LEO ROSENBLUM & ASSOCIATES	000000022749221	5,077.00	GAXI-7440000-000000282671-1	6	01	0	65000	0	57602	11901	5850	7440000	402.00
LEO ROSENBLUM & ASSOCIATES	000000022749221	5,077.00	GAXI-7440000-000000282670-1	5	01	0	65000	0	57602	11901	5850	7440000	273.00

Vendor Name	Warrant Number	Warrant Amount	Payment Doc ID	Accounting Line No.	Fund	Sub-Fund	Resource	Project Year	Goal/Categorical	Function/Activity	Object	School Location/Dept	Line Amount
LEO ROSENBLUM & ASSOCIATES	000000022749221	5,077.00	GAXI-7440000-000000282675-1	10	01	0	65000	0	57602	11901	5850	7440000	402.00
LEO ROSENBLUM & ASSOCIATES	000000022749221	5,077.00	GAXI-7440000-000000282666-1	1	01	0	65000	0	57602	11901	5850	7440000	407.00
LEO ROSENBLUM & ASSOCIATES	000000022749221	5,077.00	GAXI-7440000-000000282676-1	11	01	0	65000	0	57602	11901	5850	7440000	402.00
LEO ROSENBLUM & ASSOCIATES	000000022749221	5,077.00	GAXI-7440000-000000282669-1	4	01	0	65000	0	57602	11901	5850	7440000	387.00
LEO ROSENBLUM & ASSOCIATES	000000022749221	5,077.00	GAXI-7440000-000000282679-1	14	01	0	65000	0	57602	11901	5850	7440000	407.00
LEO ROSENBLUM & ASSOCIATES	000000022761264	8,160.02	GAXI-7440000-000000283385-1	17	01	0	65000	0	57602	11901	5850	7440000	2,561.02
LEO ROSENBLUM & ASSOCIATES	000000022749221	5,077.00	GAXI-7440000-000000282678-1	13	01	0	65000	0	57602	11901	5850	7440000	402.00
LEO ROSENBLUM & ASSOCIATES	000000022749221	5,077.00	GAXI-7440000-000000282677-1	12	01	0	65000	0	57602	11901	5850	7440000	273.00
LESLEY-ANNE STONE	000000022736664	351.83	GAXI-2030000-000000282496-1	1	01	0	90870	0	81000	50001	4395	2030000	351.83
LESLIE HAWA	202605260583967	1,269.81	GAXI-0000000-000000283245-1	1	67	0	00000	0	00000	60000	5810	0000000	1,269.81
LESLIE ROSALES-KIM	000000022766013	171.23	GAXI-7440000-000000283565-1	1	01	0	65000	0	57602	11901	4310	7440000	90.40
LESLIE ROSALES-KIM	000000022766013	171.23	GAXI-7440000-000000283580-1	2	01	0	65000	0	57602	11901	4310	7440000	80.83
LESZEK BACZKOWSKI	202605260583976	503.50	GAXI-0000000-000000283129-1	1	67	0	00000	0	00000	60000	5810	0000000	503.50
LETICIA GUADALUPE CASTILLO	202605260584021	1,396.00	GAXI-0000000-000000283145-1	1	67	0	00000	0	00000	60000	5810	0000000	1,396.00
LEVEL 3 COMMUNICATIONS LLC	000000022739047	1,070.06	GAXI-7400000-000000282561-1	1	01	0	00000	0	00000	72000	5910	7400000	1,070.06
LIANN ASMUSSEN	202605260584000	1,248.29	GAXI-0000000-000000283125-1	1	67	0	00000	0	00000	60000	5810	0000000	1,248.29
LIBRARY IDEAS LLC	000000022761265	14,462.40	GAXI-2030000-000000283317-1	1	01	0	30100	2	11100	10000	4210	2030000	10,473.40
LIBRARY IDEAS LLC	000000022761265	14,462.40	GAXI-2030000-000000283318-1	2	01	0	30100	2	11100	10000	4210	2030000	397.44
LIBRARY IDEAS LLC	000000022761265	14,462.40	GAXI-2030000-000000283319-1	3	01	0	30100	2	11100	10000	4210	2030000	299.84
LIBRARY IDEAS LLC	000000022761265	14,462.40	GAXI-2030000-000000283320-1	4	01	0	30100	2	11100	10000	4210	2030000	290.16
LIBRARY IDEAS LLC	000000022761265	14,462.40	GAXI-2030000-000000283321-1	5	01	0	30100	2	11100	10000	4210	2030000	290.16
LIBRARY IDEAS LLC	000000022761265	14,462.40	GAXI-2030000-000000283322-1	6	01	0	30100	2	11100	10000	4210	2030000	393.92
LIBRARY IDEAS LLC	000000022761265	14,462.40	GAXI-2030000-000000283323-1	7	01	0	30100	2	11100	10000	4210	2030000	349.08
LIBRARY IDEAS LLC	000000022761265	14,462.40	GAXI-2030000-000000283324-1	8	01	0	30100	2	11100	10000	4210	2030000	241.80
LIBRARY IDEAS LLC	000000022761265	14,462.40	GAXI-2030000-000000283325-1	9	01	0	30100	2	11100	10000	4210	2030000	193.44
LIBRARY IDEAS LLC	000000022761265	14,462.40	GAXI-2030000-000000283326-1	10	01	0	30100	2	11100	10000	4210	2030000	290.16
LIBRARY IDEAS LLC	000000022761265	14,462.40	GAXI-2030000-000000283327-1	11	01	0	30100	2	11100	10000	4210	2030000	300.72
LIBRARY IDEAS LLC	000000022761265	14,462.40	GAXI-2030000-000000283328-1	12	01	0	30100	2	11100	10000	4210	2030000	483.64
LIBRARY IDEAS LLC	000000022761265	14,462.40	GAXI-2150000-000000283453-1	13	01	0	42030	2	47600	10000	4210	2150000	388.69
LIBRARY IDEAS LLC	000000022761265	14,462.40	GAXI-2150000-000000283454-1	14	01	0	42030	2	47600	10000	4210	2150000	69.95
LIBRARYTHING.COM	000000022736665	240.00	GAXI-2100000-000000282533-1	1	01	0	30100	2	11100	10000	5840	2100000	240.00
LIBRE SCHOOL SERVICES	000000022728892	1,665.00	GAXI-2130000-000000281744-1	1	01	0	90820	0	11100	10000	5811	2130000	1,665.00
LIBRE SCHOOL SERVICES	000000022758865	1,675.00	GAXI-4310000-000000283181-1	1	01	0	00000	0	11100	41000	5812	4310000	1,675.00
LIBRE SCHOOL SERVICES	000000022746735	9,467.50	GAXI-2130000-000000282625-1	1	01	0	67700	3	11100	10000	4310	2130000	827.50
LIBRE SCHOOL SERVICES	000000022746735	9,467.50	GAXI-4320000-000000282737-1	6	01	0	90904	0	15001	42000	5811	4320000	1,552.50
LIBRE SCHOOL SERVICES	000000022746735	9,467.50	GAXI-4320000-000000282736-1	5	01	0	90904	0	17006	41002	5811	4320000	642.50
LIBRE SCHOOL SERVICES	000000022746735	9,467.50	GAXI-4320000-000000282738-1	7	01	0	90904	0	15001	42000	5811	4320000	4,205.00
LIBRE SCHOOL SERVICES	000000022746735	9,467.50	GAXI-4320000-000000282735-1	3	01	0	00000	0	15001	42000	5811	4320000	331.25
LIBRE SCHOOL SERVICES	000000022746735	9,467.50	GAXI-4320000-000000282735-1	4	01	0	90904	0	15001	42000	5811	4320000	243.75
LIBRE SCHOOL SERVICES	000000022746735	9,467.50	GAXI-4310000-000000282724-1	2	01	0	00000	0	17006	10000	5812	4310000	1,665.00
LIBRE SCHOOL SERVICES	000000022749222	1,300.00	GAXI-7910000-000000282661-1	1	01	0	06350	0	38000	10000	5220	7910000	1,300.00
LIBRE SCHOOL SERVICES	000000022739048	625.00	GAXI-7910000-000000282558-1	1	01	0	06350	0	38000	10000	5220	7910000	625.00
LINCOLN AQUATICS	000000022753991	623.21	GAXI-7520000-000000283019-1	1	01	0	81500	0	00000	81100	4410	7520000	458.25
LINCOLN AQUATICS	000000022753991	623.21	GAXI-7520000-000000283019-1	2	01	0	81500	0	00000	81100	4310	7520000	164.96
LINDA LINDLEY	202605260583983	194.83	GAXI-0000000-000000283265-1	1	67	0	00000	0	00000	60000	5810	0000000	194.83
LINDA MARIE SWEENEY	202605270584523	319.29	GAXI-0000000-000000283339-1	1	67	0	00000	0	00000	60000	5810	0000000	319.29
LINDA V. GREGORCZYK	202605270584538	1,269.81	GAXI-0000000-000000283230-1	1	67	0	00000	0	00000	60000	5810	0000000	1,269.81
LINGUABEE LLC	000000022761266	12,190.00	GAXI-7440000-000000283287-1	2	01	0	65000	0	57602	11901	5850	7440000	6,837.00
LINGUABEE LLC	000000022761266	12,190.00	GAXI-7440000-000000283285-1	1	01	0	65000	0	57602	11901	5850	7440000	5,353.00
LINKIN PRINTS	000000022736666	1,524.90	GAXI-2090000-000000282346-1	1	01	0	00000	0	11100	10000	4310	2090000	1,524.90
LISA HARRISON	000000022766014	200.00	GAXI-7440000-000000283568-1	1	01	0	65000	0	57602	11901	4310	7440000	200.00
LISA RALUY MARTINEZ	000000022766015	125.00	GAXI-7910000-000000283566-1	1	01	0	06350	0	38000	10000	5220	7910000	125.00
LORI SCHLEINKOFER	000000022749223	54.74	GAXI-7440000-000000282843-1	3	01	0	65200	0	50010	21000	5210	7440000	21.17
LORI SCHLEINKOFER	000000022749223	54.74	GAXI-7440000-000000282839-1	1	01	0	65200	0	50010	21000	5210	7440000	16.97
LORI SCHLEINKOFER	000000022749223	54.74	GAXI-7440000-000000282840-1	2	01	0	65200	0	50010	21000	5210	7440000	16.60
LORI SCHLEINKOFER	000000022758866	310.36	GAXI-7440000-000000283166-1	1	01	0	65200	0	50010	21000	5220	7440000	310.36
Los Angeles Lockbox	000000022728893	912.00	GAXI-7440000-000000281619-1	1	01	0	65460	0	57601	11800	5810	7440000	528.00
Los Angeles Lockbox	000000022728893	912.00	GAXI-7440000-000000281620-1	2	01	0	65460	0	57601	11800	5810	7440000	384.00
Los Angeles Lockbox	000000022734000	96.00	GAXI-7440000-000000282035-1	1	01	0	65460	0	57601	11800	5810	7440000	96.00

Vendor Name	Warrant Number	Warrant Amount	Payment Doc ID	Accounting Line No.	Fund	Sub-Fund	Resource	Project Year	Goal/Categorical	Function/Activity	Object	School Location/Dept	Line Amount
Los Angeles Lockbox	000000022756404	27,731.66	GAXI-7440000-000000283064-1	1	01	0	65460	0	57601	11800	5810	7440000	816.00
Los Angeles Lockbox	000000022756404	27,731.66	GAXI-7440000-000000283065-1	2	01	0	65460	0	57601	11800	5810	7440000	144.00
Los Angeles Lockbox	000000022756404	27,731.66	GAXI-7440000-000000283066-1	3	01	0	65460	0	57601	11800	5810	7440000	1,008.00
Los Angeles Lockbox	000000022756404	27,731.66	GAXI-7440000-000000283067-1	4	01	0	65460	0	57601	11800	5810	7440000	672.00
Los Angeles Lockbox	000000022756404	27,731.66	GAXI-7440000-000000283068-1	5	01	0	65460	0	57601	11800	5810	7440000	480.00
Los Angeles Lockbox	000000022756404	27,731.66	GAXI-7440000-000000283069-1	6	01	0	65460	0	57601	11800	5810	7440000	1,248.00
Los Angeles Lockbox	000000022756404	27,731.66	GAXI-7440000-000000283070-1	7	01	0	65460	0	57601	11800	5810	7440000	1,968.00
Los Angeles Lockbox	000000022756404	27,731.66	GAXI-7440000-000000283071-1	8	01	0	65460	0	57601	11800	5810	7440000	864.00
Los Angeles Lockbox	000000022756404	27,731.66	GAXI-7440000-000000283072-1	9	01	0	65460	0	57601	11800	5810	7440000	288.00
Los Angeles Lockbox	000000022756404	27,731.66	GAXI-7440000-000000283073-1	10	01	0	65000	0	57601	11804	5810	7440000	10,104.03
Los Angeles Lockbox	000000022756404	27,731.66	GAXI-7440000-000000283074-1	11	01	0	65000	0	57601	11804	5810	7440000	10,139.63
Los Angeles Lockbox	000000022761267	1,104.00	GAXI-7440000-000000283427-1	1	01	0	65460	0	57601	11800	5810	7440000	1,104.00
LOS ANGELES ZOO	000000022724221	265.00	GAXI-2130000-000000281625-1	1	01	0	90820	0	11100	10000	5880	2130000	265.00
LOUIS DY	202605270584463	194.83	GAXI-0000000-000000283209-1	1	67	0	00000	0	00000	60000	5810	0000000	194.83
LOZANO SMITH	000000022746736	12,440.17	GAXI-7400000-000000282404-1	1	01	0	00000	0	00000	72000	5820	7400000	9,596.00
LOZANO SMITH	000000022746736	12,440.17	GAXI-7400000-000000282404-1	3	21	3	00000	0	92000	85000	5820	7400000	49.46
LOZANO SMITH	000000022746736	12,440.17	GAXI-7440000-000000282404-1	2	01	0	65000	0	50010	21000	5820	7440000	2,794.71
LUKE ANDERSON	000000022756403	4,382.50	GAXI-7540000-000000283111-1	8	01	0	26000	0	11100	10000	5810	7540000	1,470.00
LUKE ANDERSON	000000022771273	3,712.50	GAXI-7540000-000000283639-1	4	01	0	26000	0	11100	10000	5810	7540000	1,155.00
LUKE ANDERSON	000000022771273	3,712.50	GAXI-7540000-000000283638-1	3	01	0	26000	0	11100	10000	5810	7540000	945.00
LUKE ANDERSON	000000022756403	4,382.50	GAXI-2010000-000000283097-1	3	01	0	30100	2	11100	10000	5810	2010000	308.50
LUKE ANDERSON	000000022756403	4,382.50	GAXI-2010000-000000283097-1	4	01	0	30100	1	11100	10000	5810	2010000	141.50
LUKE ANDERSON	000000022771273	3,712.50	GAXI-2010000-000000283644-1	6	01	0	30100	2	11100	10000	5810	2010000	308.50
LUKE ANDERSON	000000022771273	3,712.50	GAXI-2010000-000000283644-1	7	01	0	30100	1	11100	10000	5810	2010000	141.50
LUKE ANDERSON	000000022756403	4,382.50	GAXI-2020000-000000283095-1	1	01	0	90870	0	11100	10000	5810	2020000	500.00
LUKE ANDERSON	000000022771273	3,712.50	GAXI-2020000-000000283643-1	5	01	0	90870	0	11100	10000	5810	2020000	300.00
LUKE ANDERSON	000000022771273	3,712.50	GAXI-2030000-000000283635-1	1	01	0	90870	0	11100	10000	5810	2030000	562.50
LUKE ANDERSON	000000022756403	4,382.50	GAXI-2090000-000000283096-1	2	01	0	30100	2	11100	10000	5810	2090000	400.00
LUKE ANDERSON	000000022756403	4,382.50	GAXI-2130000-000000283101-1	7	01	0	00000	0	11100	10000	5810	2130000	562.50
LUKE ANDERSON	000000022756403	4,382.50	GAXI-2150000-000000283099-1	6	01	0	00000	0	11100	10000	5810	2150000	500.00
LUKE ANDERSON	000000022756403	4,382.50	GAXI-2160000-000000283098-1	5	01	0	90870	0	11100	10000	5810	2160000	500.00
LUKE ANDERSON	000000022771273	3,712.50	GAXI-2160000-000000283636-1	2	01	0	90870	0	11100	10000	5810	2160000	300.00
LYDIA LUIZZI	202605260584023	503.50	GAXI-0000000-000000283269-1	1	67	0	00000	0	00000	60000	5810	0000000	503.50
LYDIA MARINA RIOS	000000022768175	319.29	GAXI-0000000-000000283305-1	1	67	0	00000	0	00000	60000	5810	0000000	319.29
LYNDA CAMARILLO	202605260583971	377.43	GAXI-0000000-000000283143-1	1	67	0	00000	0	00000	60000	5810	0000000	377.43
MADELINE ALPERT	000000022766016	32.00	GAXI-4310000-000000283576-1	1	01	0	00000	0	11401	10000	4310	4310000	32.00
MAKER MAVEN, LLC	000000022751674	845.33	GAXI-2020000-000000282868-1	1	01	0	90870	0	11100	10000	4310	2020000	845.33
MARGARET HESS-WITUCKI	202605260584009	807.05	GAXI-0000000-000000283247-1	1	67	0	00000	0	00000	60000	5810	0000000	807.05
MARGARET MORGAN	202605260584001	1,248.29	GAXI-0000000-000000283286-1	1	67	0	00000	0	00000	60000	5810	0000000	1,248.29
MARIA ELENA ROMERO	202605270584473	807.05	GAXI-0000000-000000283309-1	1	67	0	00000	0	00000	60000	5810	0000000	807.05
MARIA L PEREZ	202605270584498	377.43	GAXI-0000000-000000283298-1	1	67	0	00000	0	00000	60000	5810	0000000	377.43
MARIA L PEREZ	202604300574008	377.43	GAXI-0000000-000000281595-1	1	67	0	00000	0	00000	60000	5810	0000000	377.43
MARIA MARQUEZ CARMAN	202605260583990	1,269.81	GAXI-0000000-000000283272-1	1	67	0	00000	0	00000	60000	5810	0000000	1,269.81
MARIPOSA TREE MANAGEMENT INC	000000022753992	7,685.00	GAXI-7520000-000000283018-1	1	01	0	81500	0	00000	81100	5631	7520000	7,685.00
MARISA BRADFIELD	000000022736667	1,000.00	GAXI-7420000-000000282491-1	1	01	0	00000	0	11100	10000	5220	7420000	1,000.00
MARK BANUELOS	000000022741677	739.06	GAXI-7420000-000000282590-1	1	01	0	00000	0	11100	10000	5220	7420000	739.06
MARK CLARKE	202605270584462	1,269.81	GAXI-0000000-000000283148-1	1	67	0	00000	0	00000	60000	5810	0000000	1,269.81
MARK PALMER	202605270584478	194.83	GAXI-0000000-000000283296-1	1	67	0	00000	0	00000	60000	5810	0000000	194.83
MARLA J JURMAN	202605260584010	798.03	GAXI-0000000-000000283252-1	1	67	0	00000	0	00000	60000	5810	0000000	798.03
MARLA STEPHANIE LIDDELL-JOHNSON	202605260584012	1,248.29	GAXI-0000000-000000283263-1	1	67	0	00000	0	00000	60000	5810	0000000	1,248.29
MARSHMEDIA	000000022771274	800.00	GAXI-7420000-000000283599-1	1	01	0	63000	0	11100	10000	5840	7420000	800.00
MARTHA FERGUSON	202605270584479	377.43	GAXI-0000000-000000283218-1	1	67	0	00000	0	00000	60000	5810	0000000	377.43
MARTHA FERGUSON	202604300574002	377.43	GAXI-0000000-000000281592-1	1	67	0	00000	0	00000	60000	5810	0000000	377.43
MARTHA WALTER	202605270584537	1,396.00	GAXI-0000000-000000283352-1	1	67	0	00000	0	00000	60000	5810	0000000	1,396.00
MARY KELLY	202605260583974	798.03	GAXI-0000000-000000283254-1	1	67	0	00000	0	00000	60000	5810	0000000	798.03
MASSADI ENTERPRISES	000000022746737	15,200.00	GAXI-4310000-000000282627-1	1	40	0	90329	0	00000	85000	6281	4310000	15,200.00
MATH STACKERS INC.	000000022761268	89.00	GAXI-2050000-000000283361-1	1	01	0	90870	0	11100	10000	4310	2050000	89.00
MATH STACKERS INC.	000000022728894	89.00	GAXI-2050000-000000281927-1	1	01	0	90870	0	11100	10000	4310	2050000	89.00
MB DANCE INC	000000022771275	7,044.00	GAXI-7420000-000000283621-1	1	01	0	26000	0	11100	10000	5810	7420000	7,044.00

Vendor Name	Warrant Number	Warrant Amount	Payment Doc ID	Accounting Line No.	Fund	Sub-Fund	Resource	Project Year	Goal/Categorical	Function/Activity	Object	School Location/Dept	Line Amount
MB DANCE INC	000000022756405	22,050.00	GAXI-2010000-000000283115-1	2	01	0	90820	0	11100	10000	5810	2010000	8,100.00
MB DANCE INC	000000022756405	22,050.00	GAXI-2060000-000000283114-1	1	01	0	67700	3	11100	10000	5810	2060000	13,950.00
MCCALLA COMPANY JANITORIAL SUPPLIES	000000022749224	331.50	GAXI-7520000-000000282826-1	1	01	0	00100	0	00000	82100	4310	7520000	331.50
MELARAGNO, M.D., ALBERT J.	000000022761269	175.00	GAXI-7440000-000000283367-1	1	01	0	65000	0	57602	11900	5850	7440000	175.00
MERCEDITA R CORNEJO	202605270584481	755.91	GAXI-0000000-000000283151-1	1	67	0	00000	0	00000	60000	5810	0000000	755.91
MERRY PLUMBING CO INC	000000022731271	1,865.30	GAXI-7520000-000000282028-1	1	01	0	81500	0	00000	81100	5631	7520000	1,865.30
MICHAEL A DECARO	202605270584491	435.57	GAXI-0000000-000000283198-1	1	67	0	00000	0	00000	60000	5810	0000000	435.57
MICHAEL A DECARO	202604300574004	435.57	GAXI-0000000-000000281208-1	1	67	0	00000	0	00000	60000	5810	0000000	435.57
MICHAEL AND LEAH CARBONE	000000022739049	5,885.00	GAXI-7440000-000000282484-1	1	01	0	65000	0	57601	11804	5810	7440000	5,885.00
MICHELLE HACKING	202605270584533	755.91	GAXI-0000000-000000283237-1	1	67	0	00000	0	00000	60000	5810	0000000	755.91
MIDAMERICA ADMINISTRATIVE & RETIREMENT SOLUTIONS	202605060576714	460.93	GAXI-0000000-000000282283-1	1	76	0	00000	0	00000	00000	9518	0000000	460.93
MIDAMERICA ADMINISTRATIVE & RETIREMENT SOLUTIONS	202605190581446	17,450.96	GAXI-0000000-000000283106-1	1	76	0	00000	0	00000	00000	9518	0000000	17,450.96
MOLLENHAUER GROUP CIVIL, INC.	000000022766017	34,752.00	GAXI-5330000-000000283026-1	1	21	0	00000	0	91008	85000	6282	5330000	11,360.00
MOLLENHAUER GROUP CIVIL, INC.	000000022766017	34,752.00	GAXI-5330000-000000283028-1	2	21	0	00000	0	91008	85000	6282	5330000	23,392.00
MONTEJO GENDERZON	000000022741678	1,077.19	GAXI-7420000-000000282595-1	1	01	0	00000	0	11100	10000	5220	7420000	1,077.19
MOONSHINE CONSULTANTS INC	000000022739050	15,330.00	GAXI-7440000-000000282530-1	1	01	0	65000	0	57601	11804	5810	7440000	15,330.00
MULTI - HEALTH SYSTEMS	000000022766018	550.00	GAXI-7440000-000000283553-1	1	01	0	00000	0	11100	31600	4311	7440000	550.00
MUSIC CENTER	000000022739051	53,356.25	GAXI-7420000-000000282564-1	1	01	0	42030	2	47600	10000	5810	7420000	53,356.25
MUTUAL OF OMAHA	000000022734001	10,148.50	GAXI-0000000-000000282284-1	1	01	0	00000	0	00000	00000	9530	0000000	10,148.50
MUTUAL OF OMAHA	000000022734002	6,826.00	GAXI-0000000-000000282286-1	1	01	0	00000	0	00000	00000	9530	0000000	6,826.00
MUTUAL OF OMAHA	000000022756406	6,526.75	GAXI-0000000-000000283107-1	1	01	0	00000	0	00000	00000	9530	0000000	6,526.75
MYBASEPAY USA LLC	000000022728895	5,486.00	GAXI-7440000-000000281682-1	1	01	0	65000	0	57601	11804	5810	7440000	5,486.00
MYBASEPAY USA LLC	000000022739052	5,486.00	GAXI-7440000-000000282555-1	1	01	0	65000	0	57601	11804	5810	7440000	5,486.00
MYBASEPAY USA LLC	000000022756407	10,972.00	GAXI-7440000-000000283051-1	1	01	0	65000	0	57601	11804	5810	7440000	5,486.00
MYBASEPAY USA LLC	000000022756407	10,972.00	GAXI-7440000-000000283052-1	2	01	0	65000	0	57601	11804	5810	7440000	5,486.00
NAESP PRESIDENT'S AWARD PROGRAM	000000022741679	130.47	GAXI-2020000-000000282619-1	1	01	0	00000	0	11100	10000	4310	2020000	130.47
NAESP PRESIDENT'S AWARD PROGRAM	000000022746738	401.55	GAXI-2060000-000000282623-1	1	01	0	00000	0	11100	10000	4310	2060000	401.55
NAESP PRESIDENT'S AWARD PROGRAM	000000022761270	219.04	GAXI-2100000-000000283448-1	1	01	0	00000	0	11100	10000	4310	2100000	219.04
NAESP PRESIDENT'S AWARD PROGRAM	000000022739053	268.08	GAXI-2090000-000000282485-1	1	01	0	00000	0	11100	10000	4310	2090000	268.08
NANCY J MARTIN	202605260583984	798.03	GAXI-0000000-000000283274-1	1	67	0	00000	0	00000	60000	5810	0000000	798.03
NANCY PETERSEN	202605270584539	1,269.81	GAXI-0000000-000000283300-1	1	67	0	00000	0	00000	60000	5810	0000000	1,269.81
NANCY RENEE FITZGERALD	202605270584536	1,248.29	GAXI-0000000-000000283219-1	1	67	0	00000	0	00000	60000	5810	0000000	1,248.29
NAPA AUTO PARTS	000000022731272	210.69	GAXI-7520000-000000281972-1	1	01	0	81500	0	00000	81100	4310	7520000	3.11
NAPA AUTO PARTS	000000022731272	210.69	GAXI-7520000-000000281973-1	2	01	0	81500	0	00000	81100	4310	7520000	29.81
NAPA AUTO PARTS	000000022731272	210.69	GAXI-7520000-000000281974-1	3	01	0	81500	0	00000	81100	4310	7520000	25.53
NAPA AUTO PARTS	000000022731272	210.69	GAXI-7520000-000000281975-1	4	01	0	81500	0	00000	81100	4310	7520000	90.95
NAPA AUTO PARTS	000000022731272	210.69	GAXI-7520000-000000281977-1	6	01	0	81500	0	00000	81100	4310	7520000	53.57
NAPA AUTO PARTS	000000022731272	210.69	GAXI-7520000-000000281976-1	5	01	0	81500	0	00000	81100	4310	7520000	7.72
NAPA AUTO PARTS	000000022749225	62.57	GAXI-7520000-000000282827-1	1	01	0	81500	0	00000	81100	4310	7520000	34.23
NAPA AUTO PARTS	000000022749225	62.57	GAXI-7520000-000000282828-1	2	01	0	81500	0	00000	81100	4310	7520000	28.34
NAPA AUTO PARTS	000000022751675	148.90	GAXI-7520000-000000282935-1	1	01	0	81500	0	00000	81100	4310	7520000	35.97
NAPA AUTO PARTS	000000022751675	148.90	GAXI-7520000-000000282936-1	2	01	0	81500	0	00000	81100	4310	7520000	112.93
NATHANIEL AND KATHRYN FINANA	000000022739054	1,950.00	GAXI-7440000-000000282545-1	1	01	0	65000	0	50010	36000	5813	7440000	1,950.00
NATIONAL ASSOCIATION OF ELEMENTARY SCHOOL PRINCIPA	000000022761271	146.36	GAXI-2030000-000000283268-1	1	01	0	00000	0	11100	10000	4310	2030000	146.36
NATIONAL SCHOOL PRODUCTS	000000022761272	616.75	GAXI-2030000-000000283331-1	1	01	0	30100	1	11100	10000	4210	2030000	616.75
NATIONAL SCIENCE TEACHERS ASSOCIATION	000000022731273	1,827.01	GAXI-7420000-000000280046-1	1	01	0	40350	1	11100	10000	5220	7420000	0.01
NATIONAL SCIENCE TEACHERS ASSOCIATION	000000022731273	1,827.01	GAXI-7420000-000000280046-1	2	01	0	40350	1	11100	10000	5220	7420000	1,827.00
NCS PEARSON INC	000000022728896	913.12	GAXI-7440000-000000281616-1	1	01	0	00000	0	11100	31600	4311	7440000	913.12
NCS PEARSON INC	000000022756408	5,642.76	GAXI-7440000-000000283037-1	1	01	0	00000	0	11100	31600	4311	7440000	545.00
NCS PEARSON INC	000000022756408	5,642.76	GAXI-7440000-000000283038-1	2	01	0	00000	0	11100	31600	4311	7440000	70.00
NCS PEARSON INC	000000022756408	5,642.76	GAXI-7440000-000000283039-1	3	01	0	00000	0	11100	31600	4311	7440000	60.00
NCS PEARSON INC	000000022756408	5,642.76	GAXI-7440000-000000283040-1	4	01	0	00000	0	11100	31600	4311	7440000	4,967.76
NCS PEARSON, INC	000000022734003	2,505.00	GAXI-5330000-000000282223-1	1	11	0	63910	0	41106	10000	4340	5330000	2,505.00
NCS PERSON, INC.	000000022771276	16,533.28	GAXI-3220000-000000283657-1	1	01	0	42030	1	47600	10000	4210	3220000	12,886.43
NCS PERSON, INC.	000000022771276	16,533.28	GAXI-3220000-000000283657-1	2	01	0	42030	2	47600	10000	4210	3220000	3,646.85
NEW YORK LIFE INSURANCE CO	000000022761273	40.50	GAXI-0000000-000000283485-1	1	76	0	00000	0	00000	00000	9579	0000000	40.50
NEXTDAY DELIVERY SERIVCE	000000022739055	164.28	GAXI-7400000-000000282557-1	1	01	0	00000	0	00000	72000	5920	7400000	164.28
NORTHPOINT DAY TREATMENT SCHOOL	000000022756409	7,585.05	GAXI-7440000-000000283075-1	1	01	0	65000	0	57601	11800	5810	7440000	6,706.04
NORTHPOINT DAY TREATMENT SCHOOL	000000022756409	7,585.05	GAXI-7440000-000000283075-1	2	01	0	65460	0	57601	11800	5810	7440000	879.01

Vendor Name	Warrant Number	Warrant Amount	Payment Doc ID	Accounting Line No.	Fund	Sub-Fund	Resource	Project Year	Goal/Categorical	Function/Activity	Object	School Location/Dept	Line Amount
NURTURING NESTS THERAPY CENTER	202605140579877	117,505.56	GAXI-7440000-000000282746-1	1	01	0	65000	0	57601	11804	5810	7440000	34,978.15
NURTURING NESTS THERAPY CENTER	202605140579877	117,505.56	GAXI-7440000-000000282747-1	2	01	0	65000	0	57601	11804	5810	7440000	38,499.59
NURTURING NESTS THERAPY CENTER	202605140579877	117,505.56	GAXI-7440000-000000282748-1	3	01	0	65000	0	57601	11804	5810	7440000	44,027.82
OFFICE DEPOT/ BUSINESS SERVICES DIVISION	000000022739056	796.41	GAXI-7440000-000000282568-1	3	01	0	65000	0	50010	27000	4310	7440000	102.39
OFFICE DEPOT/ BUSINESS SERVICES DIVISION	000000022739056	796.41	GAXI-7440000-000000282570-1	5	01	0	65000	0	50010	27000	4310	7440000	125.55
OFFICE DEPOT/ BUSINESS SERVICES DIVISION	000000022739056	796.41	GAXI-7440000-000000282569-1	4	01	0	65000	0	50010	27000	4310	7440000	26.23
OFFICE DEPOT/ BUSINESS SERVICES DIVISION	000000022739056	796.41	GAXI-7440000-000000282571-1	6	01	0	65000	0	50010	27000	4310	7440000	96.16
OFFICE DEPOT/ BUSINESS SERVICES DIVISION	000000022739056	796.41	GAXI-7440000-000000282572-1	7	01	0	65000	0	50010	27000	4310	7440000	13.61
OFFICE DEPOT/ BUSINESS SERVICES DIVISION	000000022739056	796.41	GAXI-7440000-000000282573-1	8	01	0	65000	0	50010	27000	4310	7440000	9.94
OFFICE DEPOT/ BUSINESS SERVICES DIVISION	000000022771277	4,365.74	GAXI-3220000-000000283820-1	2	01	0	00000	0	11100	10000	4310	3220000	973.11
OFFICE DEPOT/ BUSINESS SERVICES DIVISION	000000022771277	4,365.74	GAXI-3220000-000000283821-1	3	01	0	00000	0	11100	10000	4310	3220000	24.49
OFFICE DEPOT/ BUSINESS SERVICES DIVISION	000000022771277	4,365.74	GAXI-3220000-000000283822-1	4	01	0	00000	0	11100	10000	4310	3220000	642.17
OFFICE DEPOT/ BUSINESS SERVICES DIVISION	000000022771277	4,365.74	GAXI-3220000-000000283823-1	5	01	0	00000	0	11100	10000	4310	3220000	804.25
OFFICE DEPOT/ BUSINESS SERVICES DIVISION	000000022771277	4,365.74	GAXI-3220000-000000283824-1	6	01	0	00000	0	11100	10000	4310	3220000	203.31
OFFICE DEPOT/ BUSINESS SERVICES DIVISION	000000022771277	4,365.74	GAXI-3220000-000000283825-1	7	01	0	00000	0	11100	10000	4310	3220000	364.52
OFFICE DEPOT/ BUSINESS SERVICES DIVISION	000000022771277	4,365.74	GAXI-3220000-000000283826-1	8	01	0	00000	0	11100	10000	4310	3220000	984.61
OFFICE DEPOT/ BUSINESS SERVICES DIVISION	000000022771277	4,365.74	GAXI-3220000-000000283827-1	9	01	0	00000	0	11100	10000	4310	3220000	83.29
OFFICE DEPOT/ BUSINESS SERVICES DIVISION	000000022771277	4,365.74	GAXI-3220000-000000283828-1	10	01	0	00000	0	11100	10000	4310	3220000	59.54
OFFICE DEPOT/ BUSINESS SERVICES DIVISION	000000022739056	796.41	GAXI-7440000-000000282574-1	9	01	0	65000	0	50010	27000	4310	7440000	89.73
OFFICE DEPOT/ BUSINESS SERVICES DIVISION	000000022761274	348.37	GAXI-2060000-000000283393-1	2	01	0	90870	0	11100	10000	4310	2060000	329.01
OFFICE DEPOT/ BUSINESS SERVICES DIVISION	000000022736668	344.96	GAXI-2060000-000000282473-1	3	01	0	00000	0	11100	10000	4310	2060000	61.88
OFFICE DEPOT/ BUSINESS SERVICES DIVISION	000000022736668	344.96	GAXI-2060000-000000282471-1	1	01	0	00000	0	11100	10000	4310	2060000	202.33
OFFICE DEPOT/ BUSINESS SERVICES DIVISION	000000022736668	344.96	GAXI-2060000-000000282472-1	2	01	0	00000	0	11100	10000	4310	2060000	71.94
OFFICE DEPOT/ BUSINESS SERVICES DIVISION	000000022736668	344.96	GAXI-2060000-000000282474-1	4	01	0	00000	0	11100	10000	4310	2060000	32.79
OFFICE DEPOT/ BUSINESS SERVICES DIVISION	000000022771277	4,365.74	GAXI-7470000-000000283630-1	1	01	0	00000	0	00000	72000	4310	7470000	21.26
OFFICE DEPOT/ BUSINESS SERVICES DIVISION	000000022739056	796.41	GAXI-7440000-000000282575-1	10	01	0	65000	0	50010	27000	4310	7440000	219.11
OFFICE DEPOT/ BUSINESS SERVICES DIVISION	000000022739056	796.41	GAXI-7440000-000000282576-1	11	01	0	65000	0	50010	27000	4310	7440000	13.96
OFFICE DEPOT/ BUSINESS SERVICES DIVISION	000000022739056	796.41	GAXI-7440000-000000282577-1	12	01	0	65000	0	50010	27000	4310	7440000	12.56
OFFICE DEPOT/ BUSINESS SERVICES DIVISION	000000022746739	3,647.13	GAXI-3220000-000000282716-1	3	01	0	00000	0	11100	10000	4310	3220000	1,406.62
OFFICE DEPOT/ BUSINESS SERVICES DIVISION	000000022746739	3,647.13	GAXI-3220000-000000282714-1	1	01	0	00000	0	11100	10000	4310	3220000	131.90
OFFICE DEPOT/ BUSINESS SERVICES DIVISION	000000022746739	3,647.13	GAXI-3220000-000000282717-1	4	01	0	00000	0	11100	10000	4310	3220000	71.71
OFFICE DEPOT/ BUSINESS SERVICES DIVISION	000000022734004	157.08	GAXI-2030000-000000282287-1	1	01	0	00000	0	11100	10000	4310	2030000	57.94
OFFICE DEPOT/ BUSINESS SERVICES DIVISION	000000022739056	796.41	GAXI-7730000-000000282559-1	1	01	0	00000	0	00000	77000	4310	7730000	81.32
OFFICE DEPOT/ BUSINESS SERVICES DIVISION	000000022739056	796.41	GAXI-7730000-000000282560-1	2	01	0	00000	0	00000	77000	4310	7730000	5.85
OFFICE DEPOT/ BUSINESS SERVICES DIVISION	000000022736668	344.96	GAXI-2060000-000000282475-1	5	01	0	00000	0	11100	10000	4310	2060000	-23.98
OFFICE DEPOT/ BUSINESS SERVICES DIVISION	000000022734004	157.08	GAXI-2030000-000000282289-1	2	01	0	00000	0	11100	10000	4310	2030000	34.02
OFFICE DEPOT/ BUSINESS SERVICES DIVISION	000000022734004	157.08	GAXI-2030000-000000282291-1	3	01	0	00000	0	11100	10000	4310	2030000	37.53
OFFICE DEPOT/ BUSINESS SERVICES DIVISION	000000022734004	157.08	GAXI-2030000-000000282292-1	4	01	0	00000	0	11100	10000	4310	2030000	15.02
OFFICE DEPOT/ BUSINESS SERVICES DIVISION	000000022734004	157.08	GAXI-2030000-000000282293-1	5	01	0	00000	0	11100	10000	4310	2030000	12.57
OFFICE DEPOT/ BUSINESS SERVICES DIVISION	000000022728897	436.43	GAXI-2100000-000000281739-1	2	01	0	00000	0	11100	10000	4310	2100000	252.75
OFFICE DEPOT/ BUSINESS SERVICES DIVISION	000000022728897	436.43	GAXI-2010000-000000281629-1	1	01	0	00000	0	11100	10000	4310	2010000	183.68
OFFICE DEPOT/ BUSINESS SERVICES DIVISION	000000022746739	3,647.13	GAXI-4320000-000000282725-1	6	01	0	00000	0	11100	10000	4310	4320000	1,880.99
OFFICE DEPOT/ BUSINESS SERVICES DIVISION	000000022746739	3,647.13	GAXI-4320000-000000282726-1	7	01	0	00000	0	11100	10000	4310	4320000	69.81
OFFICE DEPOT/ BUSINESS SERVICES DIVISION	000000022749226	110.27	GAXI-7520000-000000282829-1	1	01	0	81500	0	00000	81100	4310	7520000	79.73
OFFICE DEPOT/ BUSINESS SERVICES DIVISION	000000022749226	110.27	GAXI-7520000-000000282830-1	2	01	0	81500	0	00000	81100	4310	7520000	30.54
OFFICE DEPOT/ BUSINESS SERVICES DIVISION	000000022751676	51.14	GAXI-2030000-000000282923-1	1	01	0	00000	0	11100	10000	4310	2030000	17.50
OFFICE DEPOT/ BUSINESS SERVICES DIVISION	000000022751676	51.14	GAXI-2030000-000000282928-1	2	01	0	00000	0	11100	10000	4310	2030000	33.64
OFFICE DEPOT/ BUSINESS SERVICES DIVISION	000000022761274	348.37	GAXI-2030000-000000283335-1	1	01	0	00000	0	11100	10000	4310	2030000	19.36
OFFICE DEPOT/ BUSINESS SERVICES DIVISION	000000022746739	3,647.13	GAXI-3220000-000000282718-1	5	01	0	00000	0	11100	10000	4310	3220000	33.08
OFFICE DEPOT/ BUSINESS SERVICES DIVISION	000000022746739	3,647.13	GAXI-3220000-000000282715-1	2	01	0	00000	0	11100	10000	4310	3220000	53.02
OFFICE DEPOT/ BUSINESS SERVICES DIVISION	000000022771277	4,365.74	GAXI-3220000-000000283829-1	11	01	0	00000	0	11100	10000	4310	3220000	24.69
OFFICE DEPOT/ BUSINESS SERVICES DIVISION	000000022771277	4,365.74	GAXI-3200000-000000283836-1	12	01	0	00000	0	11100	10000	4310	3200000	59.86
OFFICE DEPOT/ BUSINESS SERVICES DIVISION	000000022771277	4,365.74	GAXI-3200000-000000283837-1	13	01	0	00000	0	11100	10000	4310	3200000	120.64
OLD GROVE ORANGE, INC	000000022728898	6,732.00	GAXI-7490000-000000281613-1	1	13	0	53100	0	00000	37000	4712	7490000	6,732.00
OLD GROVE ORANGE, INC	000000022734005	5,802.00	GAXI-7490000-000000282259-1	1	13	0	53100	0	00000	37000	4712	7490000	5,802.00
OLD GROVE ORANGE, INC	000000022761275	17,244.00	GAXI-7490000-000000283221-1	1	13	0	53100	0	00000	37000	4712	7490000	6,970.00
OLD GROVE ORANGE, INC	000000022761275	17,244.00	GAXI-7490000-000000283444-1	2	13	0	53100	0	00000	37000	4712	7490000	10,274.00
PACIFIC MEDICAL WASTE	000000022728899	247.99	GAXI-5330000-000000281916-1	1	11	0	63910	0	41104	10000	4310	5330000	247.99
PAMELA A. ELLIS	202605270584509	409.70	GAXI-0000000-000000283213-1	1	67	0	00000	0	00000	60000	5810	0000000	409.70

Vendor Name	Warrant Number	Warrant Amount	Payment Doc ID	Accounting Line No.	Fund	Sub-Fund	Resource	Project Year	Goal/Categorical	Function/Activity	Object	School Location/Dept	Line Amount
PAMELA COHEN	202605270584493	1,269.81	GAXI-0000000-000000283149-1	1	67	0	00000	0	00000	60000	5810	0000000	1,269.81
PARADIGM HEALTHCARE SERVICES, LLC	000000022756410	5,230.45	GAXI-7440000-000000283062-1	1	01	0	95640	0	50010	27000	5850	7440000	3,439.07
PARADIGM HEALTHCARE SERVICES, LLC	000000022756410	5,230.45	GAXI-7440000-000000283063-1	2	01	0	95640	0	50010	27000	5850	7440000	1,791.38
PATRICIA IVANKOVIC	202605260583999	807.05	GAXI-0000000-000000283249-1	1	67	0	00000	0	00000	60000	5810	0000000	807.05
PATRICIA VALDIVIA GOLASKI	202605270584483	798.03	GAXI-0000000-000000283228-1	1	67	0	00000	0	00000	60000	5810	0000000	798.03
PATRICK CARMAN	202605260583962	1,269.81	GAXI-0000000-000000283144-1	1	67	0	00000	0	00000	60000	5810	0000000	1,269.81
PATRICK J SIMMONS	000000022744272	7,695.00	GAXI-2100000-000000282587-1	1	01	0	90870	0	11100	10000	5810	2100000	7,695.00
PEARSON EDUCATION, INC.	000000022728900	1,157.51	GAXI-5330000-000000281914-1	1	11	0	00639	0	41102	10000	4210	5330000	1,157.51
PERRY REX BULLINGTON	202605260583995	1,269.81	GAXI-0000000-000000283139-1	1	67	0	00000	0	00000	60000	5810	0000000	1,269.81
PHILLIP HARRIS	202605260583988	194.83	GAXI-0000000-000000283244-1	1	67	0	00000	0	00000	60000	5810	0000000	194.83
PICABOO YEARBOOKS	000000022761276	1,514.00	GAXI-2050000-000000283364-1	1	01	0	90870	0	11100	10000	4310	2050000	1,514.00
PITSCO EDUCATION, LLC	000000022761277	1,450.32	GAXI-7460000-000000283450-1	1	01	0	90202	0	11100	10000	4310	7460000	1,450.32
PJHM ARCHITECTS, INC.	000000022766019	60,948.12	GAXI-2060000-000000283014-1	1	21	0	00000	0	00000	85000	6250	2060000	39,372.93
PJHM ARCHITECTS, INC.	000000022766019	60,948.12	GAXI-2020000-000000283015-1	2	21	0	00000	0	00000	85000	6250	2020000	21,575.19
PLAY THERAPY SUPPLY LLC	000000022761278	72.85	GAXI-2060000-000000283366-1	1	01	0	90870	0	11100	10000	4310	2060000	72.85
PLUMBING WHOLESALE OUTLET INC	000000022751677	5,912.66	GAXI-7520000-000000282970-1	2	01	0	81500	0	00000	81100	4310	7520000	102.77
PLUMBING WHOLESALE OUTLET INC	000000022751677	5,912.66	GAXI-7520000-000000282969-1	1	01	0	81500	0	00000	81100	4310	7520000	632.02
PLUMBING WHOLESALE OUTLET INC	000000022751677	5,912.66	GAXI-7520000-000000282973-1	5	01	0	81500	0	00000	81100	4310	7520000	2,088.45
PLUMBING WHOLESALE OUTLET INC	000000022751677	5,912.66	GAXI-7520000-000000282972-1	4	01	0	81500	0	00000	81100	4310	7520000	232.05
PLUMBING WHOLESALE OUTLET INC	000000022751677	5,912.66	GAXI-7520000-000000282971-1	3	01	0	81500	0	00000	81100	4310	7520000	478.58
PLUMBING WHOLESALE OUTLET INC	000000022753993	972.39	GAXI-7520000-000000283016-1	1	01	0	81500	0	00000	81100	4480	7520000	972.39
PLUMBING WHOLESALE OUTLET INC	000000022751677	5,912.66	GAXI-7520000-000000282974-1	6	01	0	81500	0	00000	81100	4310	7520000	134.70
PLUMBING WHOLESALE OUTLET INC	000000022749227	886.14	GAXI-7520000-000000282877-1	1	01	0	81500	0	00000	81100	4310	7520000	49.35
PLUMBING WHOLESALE OUTLET INC	000000022731274	610.64	GAXI-7520000-000000281987-1	1	01	0	81500	0	00000	81100	4310	7520000	458.54
PLUMBING WHOLESALE OUTLET INC	000000022731274	610.64	GAXI-7520000-000000281988-1	2	01	0	81500	0	00000	81100	4310	7520000	10.42
PLUMBING WHOLESALE OUTLET INC	000000022751677	5,912.66	GAXI-7520000-000000282975-1	7	01	0	81500	0	00000	81100	4310	7520000	824.95
PLUMBING WHOLESALE OUTLET INC	000000022731274	610.64	GAXI-7520000-000000281989-1	3	01	0	81500	0	00000	81100	4310	7520000	91.58
PLUMBING WHOLESALE OUTLET INC	000000022731274	610.64	GAXI-7520000-000000281990-1	4	01	0	81500	0	00000	81100	4310	7520000	33.40
PLUMBING WHOLESALE OUTLET INC	000000022749227	886.14	GAXI-7520000-000000282878-1	2	01	0	81500	0	00000	81100	4310	7520000	20.30
PLUMBING WHOLESALE OUTLET INC	000000022731274	610.64	GAXI-7520000-000000281991-1	5	01	0	81500	0	00000	81100	4310	7520000	16.70
PLUMBING WHOLESALE OUTLET INC	000000022749227	886.14	GAXI-7520000-000000282880-1	4	01	0	81500	0	00000	81100	4310	7520000	353.60
PLUMBING WHOLESALE OUTLET INC	000000022749227	886.14	GAXI-7520000-000000282879-1	3	01	0	81500	0	00000	81100	4310	7520000	16.12
PLUMBING WHOLESALE OUTLET INC	000000022749227	886.14	GAXI-7520000-000000282881-1	5	01	0	81500	0	00000	81100	4310	7520000	446.77
PLUMBING WHOLESALE OUTLET INC	000000022751677	5,912.66	GAXI-7520000-000000282976-1	8	01	0	81500	0	00000	81100	4310	7520000	21.08
PLUMBING WHOLESALE OUTLET INC	000000022751677	5,912.66	GAXI-7520000-000000282977-1	9	01	0	81500	0	00000	81100	4310	7520000	208.25
PLUMBING WHOLESALE OUTLET INC	000000022751677	5,912.66	GAXI-7520000-000000282978-1	10	01	0	81500	0	00000	81100	4310	7520000	83.01
PLUMBING WHOLESALE OUTLET INC	000000022751677	5,912.66	GAXI-7520000-000000282979-1	11	01	0	81500	0	00000	81100	4310	7520000	372.08
PLUMBING WHOLESALE OUTLET INC	000000022751677	5,912.66	GAXI-7520000-000000282980-1	12	01	0	81500	0	00000	81100	4310	7520000	3.33
PLUMBING WHOLESALE OUTLET INC	000000022751677	5,912.66	GAXI-7520000-000000282981-1	13	01	0	81500	0	00000	81100	4310	7520000	547.00
PLUMBING WHOLESALE OUTLET INC	000000022751677	5,912.66	GAXI-7520000-000000282982-1	14	01	0	81500	0	00000	81100	4310	7520000	184.39
PLUMBING WHOLESALE OUTLET INC	000000022751677	5,912.66	GAXI-7520000-000000282983-1	15	01	0	81500	0	00000	81100	4310	7520000	122.09
PLUMBING WHOLESALE OUTLET INC	000000022751677	5,912.66	GAXI-7520000-000000282984-1	16	01	0	81500	0	00000	81100	4310	7520000	-122.09
PLUMBING WHOLESALE OUTLET INC	000000022771278	439.07	GAXI-7520000-000000283849-1	2	01	0	81500	0	00000	81100	4310	7520000	25.23
PLUMBING WHOLESALE OUTLET INC	000000022771278	439.07	GAXI-7520000-000000283848-1	1	01	0	81500	0	00000	81100	4310	7520000	10.78
PLUMBING WHOLESALE OUTLET INC	000000022771278	439.07	GAXI-7520000-000000283850-1	3	01	0	81500	0	00000	81100	4310	7520000	403.06
PRINTGLOBE, LLC.	000000022758867	782.13	GAXI-7420000-000000283117-1	1	01	0	00000	0	11100	10000	4310	7420000	782.13
PROFESSIONAL DRUM SHOP, INC.	000000022751678	503.47	GAXI-3220000-000000282713-1	1	01	0	90904	0	17006	41002	5631	3220000	503.47
PROJECT LEAD THE WAY INC	000000022728901	950.00	GAXI-3210000-000000281624-1	1	01	0	00000	0	11100	10000	5810	3210000	950.00
PUBLIC EMPLOYEES' RET SYSTEM	202605120578963	1,918,617.61	GAXI-0000000-000000282607-1	1	01	0	00000	0	00000	00000	9530	0000000	1,467,952.23
PUBLIC EMPLOYEES' RET SYSTEM	202605120578963	1,918,617.61	GAXI-0000000-000000282607-1	2	01	0	01500	0	00000	00000	9530	0000000	26,376.17
PUBLIC EMPLOYEES' RET SYSTEM	202605120578963	1,918,617.61	GAXI-0000000-000000282607-1	3	01	0	00100	0	00000	00000	9530	0000000	67,472.90
PUBLIC EMPLOYEES' RET SYSTEM	202605120578963	1,918,617.61	GAXI-0000000-000000282607-1	4	01	0	81500	0	00000	00000	9530	0000000	23,397.48
PUBLIC EMPLOYEES' RET SYSTEM	202605120578963	1,918,617.61	GAXI-0000000-000000282607-1	5	01	0	95640	0	00000	00000	9530	0000000	1,750.16
PUBLIC EMPLOYEES' RET SYSTEM	202605120578963	1,918,617.61	GAXI-0000000-000000282607-1	6	01	0	90710	0	00000	00000	9530	0000000	2,195.34
PUBLIC EMPLOYEES' RET SYSTEM	202605120578963	1,918,617.61	GAXI-0000000-000000282607-1	7	01	0	06350	0	00000	00000	9530	0000000	4,860.72
PUBLIC EMPLOYEES' RET SYSTEM	202605120578963	1,918,617.61	GAXI-0000000-000000282607-1	8	01	0	30100	0	00000	00000	9530	0000000	3,854.73
PUBLIC EMPLOYEES' RET SYSTEM	202605120578963	1,918,617.61	GAXI-0000000-000000282607-1	9	01	0	40350	0	00000	00000	9530	0000000	2,910.00
PUBLIC EMPLOYEES' RET SYSTEM	202605120578963	1,918,617.61	GAXI-0000000-000000282607-1	10	01	0	33100	0	00000	00000	9530	0000000	34,467.18
PUBLIC EMPLOYEES' RET SYSTEM	202605120578963	1,918,617.61	GAXI-0000000-000000282607-1	11	01	0	65000	0	00000	00000	9530	0000000	133,549.55

Vendor Name	Warrant Number	Warrant Amount	Payment Doc ID	Accounting Line No.	Fund	Sub-Fund	Resource	Project Year	Goal/Categorical	Function/Activity	Object	School Location/Dept	Line Amount
PUBLIC EMPLOYEES' RET SYSTEM	202605120578963	1,918,617.61	GAXI-0000000-000000282607-1	12	01	0	65460	0	00000	00000	9530	0000000	647.11
PUBLIC EMPLOYEES' RET SYSTEM	202605120578963	1,918,617.61	GAXI-0000000-000000282607-1	13	01	0	65200	0	00000	00000	9530	0000000	485.41
PUBLIC EMPLOYEES' RET SYSTEM	202605120578963	1,918,617.61	GAXI-0000000-000000282607-1	14	01	0	02200	0	00000	00000	9530	0000000	11,142.72
PUBLIC EMPLOYEES' RET SYSTEM	202605120578963	1,918,617.61	GAXI-0000000-000000282607-1	15	11	0	00639	0	00000	00000	9530	0000000	9,469.92
PUBLIC EMPLOYEES' RET SYSTEM	202605120578963	1,918,617.61	GAXI-0000000-000000282607-1	16	11	0	39130	0	00000	00000	9530	0000000	1,686.16
PUBLIC EMPLOYEES' RET SYSTEM	202605120578963	1,918,617.61	GAXI-0000000-000000282607-1	17	12	0	50250	1	00000	00000	9530	0000000	1,039.05
PUBLIC EMPLOYEES' RET SYSTEM	202605120578963	1,918,617.61	GAXI-0000000-000000282607-1	18	12	0	61050	0	00000	00000	9530	0000000	2,822.30
PUBLIC EMPLOYEES' RET SYSTEM	202605120578963	1,918,617.61	GAXI-0000000-000000282607-1	19	12	0	61050	1	00000	00000	9530	0000000	2,910.00
PUBLIC EMPLOYEES' RET SYSTEM	202605120578963	1,918,617.61	GAXI-0000000-000000282607-1	20	12	0	90602	0	00000	00000	9530	0000000	11,181.55
PUBLIC EMPLOYEES' RET SYSTEM	202605120578963	1,918,617.61	GAXI-0000000-000000282607-1	21	21	0	00000	0	00000	00000	9530	0000000	2,338.65
PUBLIC EMPLOYEES' RET SYSTEM	202605120578963	1,918,617.61	GAXI-0000000-000000282607-1	22	13	0	53100	0	00000	00000	9530	0000000	20,885.00
PUBLIC EMPLOYEES' RET SYSTEM	202605120578963	1,918,617.61	GAXI-0000000-000000282607-1	23	01	0	00000	0	00000	00000	9530	0000000	1,466.20
PUBLIC EMPLOYEES' RET SYSTEM	202605120578963	1,918,617.61	GAXI-0000001-000000282607-1	25	67	0	00000	0	00000	60000	5810	0000001	43,714.00
PUBLIC EMPLOYEES' RET SYSTEM	202605120578963	1,918,617.61	GAXI-0000027-000000282607-1	24	67	0	00000	0	00000	60000	5810	0000027	5,372.00
PUBLIC EMPLOYEES' RET SYSTEM	202605120578963	1,918,617.61	GAXI-0000072-000000282607-1	26	67	0	00000	0	00000	60000	5810	0000072	34,344.00
PUBLIC EMPLOYEES' RET SYSTEM	202605120578963	1,918,617.61	GAXI-7400000-000000282607-1	27	67	0	00000	0	00000	60000	5810	7400000	327.08
PUBLIC EMPLOYEES' RET SYSTEM	202605260583961	2,003.66	GAXI-0000000-000000283600-1	1	01	0	00000	0	00000	00000	9530	0000000	2,003.66
QUEST THERAPY GROUP, LLC	000000022749228	15,778.51	GAXI-7440000-000000282799-1	1	01	0	65000	0	57601	11804	5810	7440000	2,931.08
QUEST THERAPY GROUP, LLC	000000022749228	15,778.51	GAXI-7440000-000000282800-1	2	01	0	65000	0	57601	11804	5810	7440000	3,392.55
QUEST THERAPY GROUP, LLC	000000022749228	15,778.51	GAXI-7440000-000000282801-1	3	01	0	65000	0	57601	11804	5810	7440000	558.00
QUEST THERAPY GROUP, LLC	000000022749228	15,778.51	GAXI-7440000-000000282802-1	4	01	0	65000	0	57601	11804	5810	7440000	6,049.88
QUEST THERAPY GROUP, LLC	000000022749228	15,778.51	GAXI-7440000-000000282803-1	5	01	0	65000	0	57601	11804	5810	7440000	2,847.00
RAFAELA LIZARRAGA	202605260583987	377.43	GAXI-0000000-000000283266-1	1	67	0	00000	0	00000	60000	5810	0000000	377.43
RAFAELA LIZARRAGA	202604300574007	377.43	GAXI-0000000-000000281593-1	1	67	0	00000	0	00000	60000	5810	0000000	377.43
RALPH DEJEAN FALLS	202605270584525	755.91	GAXI-0000000-000000283215-1	1	67	0	00000	0	00000	60000	5810	0000000	755.91
RANDY M OGAWA	202605270584524	807.05	GAXI-0000000-000000283292-1	1	67	0	00000	0	00000	60000	5810	0000000	807.05
RCM TECHNOLOGIES INC	000000022751679	16,464.00	GAXI-7440000-000000282866-1	1	01	0	65000	0	57601	11804	5810	7440000	16,464.00
REALLY GOOD STUFF LLC	000000022761279	80.91	GAXI-2030000-000000283330-1	1	01	0	00000	0	11100	10000	4310	2030000	29.01
REALLY GOOD STUFF LLC	000000022761279	80.91	GAXI-2060000-000000283391-1	2	01	0	90870	0	11100	10000	4310	2060000	51.90
REBECCA RODRIGUEZ	202605270584501	194.83	GAXI-0000000-000000283307-1	1	67	0	00000	0	00000	60000	5810	0000000	194.83
REBSTOCK, MATTHEW AND JAN	000000022756411	53,700.00	GAXI-7440000-000000282939-1	1	01	0	65000	0	50010	36000	5813	7440000	53,700.00
REFRIGERATION SUPPLIES DIST	000000022731275	1,168.25	GAXI-7520000-000000281979-1	1	01	0	81500	0	00000	81100	4310	7520000	352.10
REFRIGERATION SUPPLIES DIST	000000022731275	1,168.25	GAXI-7520000-000000281980-1	2	01	0	81500	0	00000	81100	4310	7520000	290.63
REFRIGERATION SUPPLIES DIST	000000022731275	1,168.25	GAXI-7520000-000000281982-1	4	01	0	81500	0	00000	81100	4310	7520000	458.36
REFRIGERATION SUPPLIES DIST	000000022731275	1,168.25	GAXI-7520000-000000281981-1	3	01	0	81500	0	00000	81100	4310	7520000	67.16
REFRIGERATION SUPPLIES DIST	000000022749229	577.56	GAXI-7520000-000000282831-1	1	01	0	81500	0	00000	81100	4310	7520000	232.24
REFRIGERATION SUPPLIES DIST	000000022749229	577.56	GAXI-7520000-000000282832-1	2	01	0	81500	0	00000	81100	4310	7520000	345.32
REFRIGERATION SUPPLIES DIST	000000022751680	704.03	GAXI-7520000-000000282985-1	1	01	0	81500	0	00000	81100	4310	7520000	373.15
REFRIGERATION SUPPLIES DIST	000000022751680	704.03	GAXI-7520000-000000282986-1	2	01	0	81500	0	00000	81100	4310	7520000	330.88
RENEE NORMAN MILLER	202605260583997	1,396.00	GAXI-0000000-000000283281-1	1	67	0	00000	0	00000	60000	5810	0000000	1,396.00
RHIANNON CLARK	000000022756412	3,300.00	GAXI-2030000-000000283093-1	1	01	0	67700	2	17011	10000	5810	2030000	3,300.00
RHYAN M. ADAMS	000000022728902	750.00	GAXI-2030000-000000281928-1	1	01	0	67700	3	11100	10000	5810	2030000	750.00
RHYAN M. ADAMS	000000022756413	750.00	GAXI-2030000-000000283102-1	1	01	0	67700	3	11100	10000	5810	2030000	750.00
RICHARD D LIGHTFOOT	202605260583981	825.69	GAXI-0000000-000000283264-1	1	67	0	00000	0	00000	60000	5810	0000000	825.69
RICHARD JAMES SARQUIZ	000000022768176	890.89	GAXI-0000000-000000283313-1	1	67	0	00000	0	00000	60000	5810	0000000	890.89
RICHARD JAMES SARQUIZ	000000022724222	890.89	GAXI-0000000-000000281596-1	1	67	0	00000	0	00000	60000	5810	0000000	890.89
RICK VONK	202605270584526	807.05	GAXI-0000000-000000283351-1	1	67	0	00000	0	00000	60000	5810	0000000	807.05
RITA MORGAN	000000022756414	18,400.00	GAXI-7440000-000000283049-1	1	01	0	65000	0	57602	11900	5850	7440000	9,545.00
RITA MORGAN	000000022756414	18,400.00	GAXI-7440000-000000283050-1	2	01	0	65000	0	57602	11900	5850	7440000	8,855.00
RIVERSIDE INSIGHTS	000000022771279	509.35	GAXI-7420000-000000283592-1	1	01	0	00000	0	11100	10000	4311	7420000	509.35
ROBERT D. ALCANTAR	202605260583994	503.50	GAXI-0000000-000000283119-1	1	67	0	00000	0	00000	60000	5810	0000000	503.50
ROBIN RICKMAN	000000022768177	169.85	GAXI-7500000-000000283165-1	1	21	0	00000	0	92000	85000	5210	7500000	169.85
ROBYN ANDERS	000000022766020	231.40	GAXI-7420000-000000283569-1	1	01	0	74130	0	11100	10000	4395	7420000	231.40
ROBYN KREISBERG	000000022771280	750.00	GAXI-2020000-000000283645-1	1	01	0	67700	1	11100	10000	5810	2020000	750.00
ROOBINA KARIMIAN	000000022766021	708.76	GAXI-0000000-000000283253-1	1	67	0	00000	0	00000	60000	5810	0000000	708.76
ROSE GARCIA	202605270584464	807.05	GAXI-0000000-000000283223-1	1	67	0	00000	0	00000	60000	5810	0000000	807.05
RUSSELL SIGLER INC.	000000022751681	1,797.13	GAXI-7520000-000000282987-1	1	01	0	81500	0	00000	81100	4310	7520000	952.60
RUSSELL SIGLER INC.	000000022751681	1,797.13	GAXI-7520000-000000282988-1	2	01	0	81500	0	00000	81100	4310	7520000	598.72
RUSSELL SIGLER INC.	000000022751681	1,797.13	GAXI-7520000-000000282989-1	3	01	0	81500	0	00000	81100	4310	7520000	245.81

Vendor Name	Warrant Number	Warrant Amount	Payment Doc ID	Accounting Line No.	Fund	Sub-Fund	Resource	Project Year	Goal/Categorical	Function/Activity	Object	School Location/Dept	Line Amount
RUSSELL SIGLER INC.	000000022731276	4,169.08	GAXI-7520000-000000282030-1	1	01	0	81500	0	00000	81100	4310	7520000	2,080.60
RUSSELL SIGLER INC.	000000022731276	4,169.08	GAXI-7520000-000000282031-1	2	01	0	81500	0	00000	81100	4310	7520000	2,088.48
RUTHIE DIFONZO	202605270584504	1,248.29	GAXI-0000000-000000283203-1	1	67	0	00000	0	00000	60000	5810	0000000	1,248.29
RUTHIE DIFONZO	202604300574010	1,248.29	GAXI-0000000-000000281213-1	1	67	0	00000	0	00000	60000	5810	0000000	1,248.29
SABRINA RUIZ-EMMONS	202605050575820	11,217.95	GAXI-7420000-000000281929-1	1	01	0	63883	0	38000	10000	5850	7420000	11,217.95
SALLY A COTREL	202605270584492	1,269.81	GAXI-0000000-000000283152-1	1	67	0	00000	0	00000	60000	5810	0000000	1,269.81
SALLY A COTREL	202604300574005	1,269.81	GAXI-0000000-000000281198-1	1	67	0	00000	0	00000	60000	5810	0000000	1,269.81
SALVADOR JIMENEZ	000000022766022	116.78	GAXI-3200000-000000283578-1	1	01	0	90711	0	11100	10000	4310	3200000	116.78
SANDRA DE BARROS	202605270584484	503.50	GAXI-0000000-000000283197-1	1	67	0	00000	0	00000	60000	5810	0000000	503.50
SANDRA DE BARROS	202604300574003	503.50	GAXI-0000000-000000281207-1	1	67	0	00000	0	00000	60000	5810	0000000	503.50
SANDRA ENGEL	202605270584470	807.05	GAXI-0000000-000000283214-1	1	67	0	00000	0	00000	60000	5810	0000000	807.05
SANDRA MACIAS	000000022736669	288.65	GAXI-7460000-000000282498-1	1	01	0	63870	0	38000	10000	5220	7460000	288.65
SANDY HILLEGAART	000000022758868	716.18	GAXI-3220000-000000283167-1	3	01	0	00000	0	18006	10000	4310	3220000	40.60
SANDY HILLEGAART	000000022758868	716.18	GAXI-3220000-000000283160-1	1	01	0	00000	0	18006	10000	4310	3220000	337.72
SANDY HILLEGAART	000000022758868	716.18	GAXI-3220000-000000283161-1	2	01	0	00000	0	18006	10000	4310	3220000	337.86
SARAH ELIZABETH GIVEN	000000022758869	1,861.11	GAXI-7910000-000000283180-1	1	01	0	06350	0	38000	10000	4310	7910000	1,861.11
SARAH ELIZABETH GIVEN	000000022763458	1,010.29	GAXI-7910000-000000277588-1	1	01	0	06350	0	38000	10000	4310	7910000	1,010.29
SARAH KNAUFF SPEECH THERAPY	202605080577543	11,700.00	GAXI-7440000-000000282490-1	1	01	0	65000	0	57602	11901	5850	7440000	10,860.00
SARAH KNAUFF SPEECH THERAPY	202605080577543	11,700.00	GAXI-7440000-000000282493-1	2	01	0	65000	0	57602	11901	5850	7440000	840.00
SARAH KNAUFF SPEECH THERAPY	202605190581447	10,560.00	GAXI-7440000-000000283060-1	1	01	0	65000	0	57602	11901	5850	7440000	10,560.00
SCHAFER ELECTRIC INC.	000000022731277	180.00	GAXI-7520000-000000282026-1	1	01	0	81500	0	00000	81100	5631	7520000	180.00
SCHOLASTIC	000000022741681	576.36	GAXI-2010000-000000282613-1	1	01	0	30100	2	11100	10000	4210	2010000	576.36
SCHOOLOUTLET.COM	000000022766023	1,846.19	GAXI-5300000-000000283585-1	1	01	0	67700	3	11100	10000	4310	5300000	1,776.04
SCHOOLOUTLET.COM	000000022766023	1,846.19	GAXI-5300000-000000283585-1	2	01	0	00000	0	11100	10000	4310	5300000	70.15
SCHOOL SERVICES OF CALIFORNIA, INC	000000022756415	3,280.00	GAXI-7470000-000000283035-1	1	01	0	00000	0	00000	72000	5850	7470000	3,280.00
SCHOOLS FIRST FCU	000000022734007	4,440.00	GAXI-0000000-000000282288-1	1	76	0	00000	0	00000	00000	9517	0000000	4,440.00
SCHOOLS FIRST FCU	000000022756416	1,310.00	GAXI-0000000-000000283108-1	1	76	0	00000	0	00000	00000	9517	0000000	1,310.00
SCHOOL SPECIALTY LLC	000000022761281	86.96	GAXI-2060000-000000283388-1	1	01	0	90870	0	11100	10000	4310	2060000	86.96
SCHOOL SPECIALTY LLC	000000022771281	1,093.95	GAXI-7420000-000000283601-1	1	01	0	63000	0	11100	10000	4310	7420000	1,093.95
SCHOOL ZONE TRANSPORTATION, INC	000000022741682	3,180.00	GAXI-2010000-000000282611-1	1	01	0	90201	0	11100	10000	5811	2010000	1,680.00
SCHOOL ZONE TRANSPORTATION, INC	000000022746740	21,283.00	GAXI-2150000-000000282651-1	3	01	0	90820	0	11100	10000	4310	2150000	1,080.00
SCHOOL ZONE TRANSPORTATION, INC	000000022728904	9,246.00	GAXI-3208100-000000281921-1	3	01	0	90904	0	11100	10000	5811	3208100	6,540.00
SCHOOL ZONE TRANSPORTATION, INC	000000022746740	21,283.00	GAXI-3210000-000000282703-1	6	01	0	90904	0	11100	10000	5811	3210000	700.00
SCHOOL ZONE TRANSPORTATION, INC	000000022728904	9,246.00	GAXI-3210000-000000281623-1	1	01	0	90904	0	11100	10000	5811	3210000	981.00
SCHOOL ZONE TRANSPORTATION, INC	000000022746740	21,283.00	GAXI-3210000-000000282702-1	5	01	0	90904	0	11100	10000	5811	3210000	1,400.00
SCHOOL ZONE TRANSPORTATION, INC	000000022746740	21,283.00	GAXI-3218100-000000282704-1	7	01	0	90904	0	17006	41002	5810	3218100	2,800.00
SCHOOL ZONE TRANSPORTATION, INC	000000022746740	21,283.00	GAXI-2030000-000000282621-1	1	01	0	90820	0	11100	10000	5811	2030000	1,725.00
SCHOOL ZONE TRANSPORTATION, INC	000000022741682	3,180.00	GAXI-2010000-000000282612-1	2	01	0	90820	0	11100	10000	5811	2010000	1,500.00
SCHOOL ZONE TRANSPORTATION, INC	000000022728904	9,246.00	GAXI-2030000-000000281919-1	2	01	0	90820	0	11100	10000	5811	2030000	1,725.00
SCHOOL ZONE TRANSPORTATION, INC	000000022761282	1,680.00	GAXI-2030000-000000283329-1	1	01	0	90820	0	11100	10000	5811	2030000	1,680.00
SCHOOL ZONE TRANSPORTATION, INC	000000022746740	21,283.00	GAXI-3220000-000000282722-1	9	01	0	90904	0	11100	10000	5811	3220000	9,600.00
SCHOOL ZONE TRANSPORTATION, INC	000000022746740	21,283.00	GAXI-3210000-000000282705-1	8	01	0	90904	0	11100	10000	5811	3210000	2,385.00
SCHOOL ZONE TRANSPORTATION, INC	000000022746740	21,283.00	GAXI-2150000-000000282653-1	4	01	0	90820	0	11100	10000	4310	2150000	772.50
SCHOOL ZONE TRANSPORTATION, INC	000000022746740	21,283.00	GAXI-2030000-000000282622-1	2	01	0	90820	0	11100	10000	5811	2030000	820.50
SCN WORLDWIDE, LLC	000000022766024	7,796.21	GAXI-4320000-000000283589-1	1	01	0	00000	0	11100	10000	4310	4320000	7,796.21
SCN WORLDWIDE, LLC	000000022761283	829.23	GAXI-5330000-000000283183-1	1	11	0	63910	0	41101	10000	4311	5330000	82.92
SCN WORLDWIDE, LLC	000000022761283	829.23	GAXI-5330000-000000283183-1	2	11	0	63910	0	41102	10000	4311	5330000	414.62
SCN WORLDWIDE, LLC	000000022761283	829.23	GAXI-5330000-000000283183-1	3	11	0	63910	0	41104	10000	4311	5330000	82.92
SCN WORLDWIDE, LLC	000000022761283	829.23	GAXI-5330000-000000283183-1	4	11	0	63910	0	41106	10000	4311	5330000	248.77
SEDGWICK CMS INC	000000022734008	1,583.34	GAXI-0000000-000000282248-1	1	01	0	00000	0	00000	00000	9532	0000000	791.67
SEDGWICK CMS INC	000000022734008	1,583.34	GAXI-0000000-000000282249-1	2	01	0	00000	0	00000	00000	9532	0000000	791.67
SETH HARDING	000000022766025	598.56	GAXI-5300000-000000283583-1	1	01	0	00000	0	11100	27000	4310	5300000	598.56
SHANNON TROY	000000022728905	1,925.00	GAXI-7440000-000000281757-1	1	01	0	65000	0	57602	11900	5850	7440000	1,925.00
SHANNON TROY	000000022756417	1,400.00	GAXI-7440000-000000283053-1	1	01	0	65000	0	57602	11900	5850	7440000	1,400.00
SHARIE DODD	202605270584548	755.91	GAXI-0000000-000000283207-1	1	67	0	00000	0	00000	60000	5810	0000000	755.91
SHARIE DODD	202604300574026	755.91	GAXI-0000000-000000281217-1	1	67	0	00000	0	00000	60000	5810	0000000	755.91
SHARON D CUSEO	202605270584510	916.86	GAXI-0000000-000000283154-1	1	67	0	00000	0	00000	60000	5810	0000000	916.86
SHARON D CUSEO	202604300574012	916.86	GAXI-0000000-000000281200-1	1	67	0	00000	0	00000	60000	5810	0000000	916.86
SHARP ELECTRONICS CORPORATION	000000022739057	66,997.15	GAXI-7400000-000000282565-1	2	01	0	00000	0	00000	72000	5631	7400000	33,845.00

Vendor Name	Warrant Number	Warrant Amount	Payment Doc ID	Accounting Line No.	Fund	Sub-Fund	Resource	Project Year	Goal/Categorical	Function/Activity	Object	School Location/Dept	Line Amount
SHARP ELECTRONICS CORPORATION	000000022739057	66,997.15	GAXI-7400000-000000282566-1	3	01	0	00000	0	00000	72000	5631	7400000	16,219.02
SHARP ELECTRONICS CORPORATION	000000022739057	66,997.15	GAXI-7400000-000000282006-1	1	01	0	00000	0	00000	72000	5611	7400000	16,933.13
SHAW HR CONSULTING, INC	000000022751683	4,865.00	GAXI-7550000-000000282895-1	1	01	0	00000	0	00000	72000	5880	7550000	970.00
SHAW HR CONSULTING, INC	000000022751683	4,865.00	GAXI-7550000-000000282897-1	3	01	0	00000	0	00000	72000	5880	7550000	2,255.00
SHAW HR CONSULTING, INC	000000022751683	4,865.00	GAXI-7550000-000000282896-1	2	01	0	00000	0	00000	72000	5880	7550000	410.00
SHAW HR CONSULTING, INC	000000022751683	4,865.00	GAXI-7550000-000000282898-1	4	01	0	00000	0	00000	72000	5880	7550000	1,230.00
SHAWN LEE MULLOY	202605260583986	551.66	GAXI-0000000-000000283288-1	1	67	0	00000	0	00000	60000	5810	0000000	551.66
SHELLEY J. DAVIES	202605270584513	503.50	GAXI-0000000-000000283157-1	1	67	0	00000	0	00000	60000	5810	0000000	503.50
SHELLEY J. DAVIES	202604300574013	503.50	GAXI-0000000-000000281203-1	1	67	0	00000	0	00000	60000	5810	0000000	503.50
SHERYL HAMBRO	202605270584490	807.05	GAXI-0000000-000000283238-1	1	67	0	00000	0	00000	60000	5810	0000000	807.05
SIERRA SCHOOL EQUIPMENT COMPANY	000000022751684	130,237.40	GAXI-2140000-000000282027-1	1	01	0	90820	0	11100	10000	6405	2140000	130,237.40
SIGNAL HILL AUTO ENTERPRISES, INC.	000000022751685	4,842.17	GAXI-7520000-000000283001-1	1	01	0	00100	0	00000	82100	4310	7520000	2,711.01
SIGNAL HILL AUTO ENTERPRISES, INC.	000000022731278	446.97	GAXI-7520000-000000281985-1	1	01	0	00100	0	00000	82100	4310	7520000	446.97
SIGNAL HILL AUTO ENTERPRISES, INC.	000000022749230	6,031.65	GAXI-7520000-000000282867-1	1	01	0	00100	0	00000	82100	4310	7520000	1,907.23
SIGNAL HILL AUTO ENTERPRISES, INC.	000000022749230	6,031.65	GAXI-7520000-000000282870-1	2	01	0	00100	0	00000	82100	4310	7520000	829.86
SIGNAL HILL AUTO ENTERPRISES, INC.	000000022749230	6,031.65	GAXI-7520000-000000282871-1	3	01	0	00100	0	00000	82100	4310	7520000	857.48
SIGNAL HILL AUTO ENTERPRISES, INC.	000000022749230	6,031.65	GAXI-7520000-000000282872-1	4	01	0	00100	0	00000	82100	4310	7520000	934.28
SIGNAL HILL AUTO ENTERPRISES, INC.	000000022749230	6,031.65	GAXI-7520000-000000282873-1	5	01	0	00100	0	00000	82100	4310	7520000	506.09
SIGNAL HILL AUTO ENTERPRISES, INC.	000000022749230	6,031.65	GAXI-7520000-000000282876-1	6	01	0	00100	0	00000	82100	4310	7520000	996.71
SIGNAL HILL AUTO ENTERPRISES, INC.	000000022751685	4,842.17	GAXI-7520000-000000283003-1	3	01	0	00100	0	00000	82100	4310	7520000	1,434.40
SIGNAL HILL AUTO ENTERPRISES, INC.	000000022751685	4,842.17	GAXI-7520000-000000283002-1	2	01	0	00100	0	00000	82100	4310	7520000	696.76
SIGN UP INTERPRETING SERVICES, LLC	000000022756418	24,293.75	GAXI-7550000-000000283036-1	1	01	0	00000	0	00000	72000	5850	7550000	24,293.75
SIMA NAZEM	202605270584494	319.29	GAXI-0000000-000000283289-1	1	67	0	00000	0	00000	60000	5810	0000000	319.29
SIRAMARK INC	000000022731279	186.85	GAXI-2140000-000000281755-1	1	01	0	42010	1	47600	10000	4210	2140000	186.85
SMARDAN SUPPLY BURBANK	000000022751686	2,340.98	GAXI-7520000-000000282990-1	1	01	0	81500	0	00000	81100	4310	7520000	149.30
SMARDAN SUPPLY BURBANK	000000022751686	2,340.98	GAXI-7520000-000000282991-1	2	01	0	81500	0	00000	81100	4310	7520000	280.22
SMARDAN SUPPLY BURBANK	000000022751686	2,340.98	GAXI-7520000-000000282992-1	3	01	0	81500	0	00000	81100	4310	7520000	687.71
SMARDAN SUPPLY BURBANK	000000022751686	2,340.98	GAXI-7520000-000000282993-1	4	01	0	81500	0	00000	81100	4310	7520000	187.53
SMARDAN SUPPLY BURBANK	000000022751686	2,340.98	GAXI-7520000-000000282994-1	5	01	0	81500	0	00000	81100	4310	7520000	56.11
SMARDAN SUPPLY BURBANK	000000022751686	2,340.98	GAXI-7520000-000000282995-1	6	01	0	81500	0	00000	81100	4310	7520000	20.14
SMARDAN SUPPLY BURBANK	000000022751686	2,340.98	GAXI-7520000-000000282996-1	7	01	0	81500	0	00000	81100	4310	7520000	233.76
SMARDAN SUPPLY BURBANK	000000022751686	2,340.98	GAXI-7520000-000000282998-1	9	01	0	81500	0	00000	81100	4310	7520000	246.71
SMARDAN SUPPLY BURBANK	000000022751686	2,340.98	GAXI-7520000-000000282997-1	8	01	0	81500	0	00000	81100	4310	7520000	69.75
SMARDAN SUPPLY BURBANK	000000022751686	2,340.98	GAXI-7520000-000000282999-1	10	01	0	81500	0	00000	81100	4310	7520000	360.11
SMARDAN SUPPLY BURBANK	000000022731280	147.59	GAXI-7520000-000000281984-1	2	01	0	81500	0	00000	81100	4310	7520000	84.78
SMARDAN SUPPLY BURBANK	000000022731280	147.59	GAXI-7520000-000000281983-1	1	01	0	81500	0	00000	81100	4310	7520000	62.81
SMARDAN SUPPLY BURBANK	000000022749231	1,089.61	GAXI-7520000-000000282854-1	1	01	0	81500	0	00000	81100	4310	7520000	28.44
SMARDAN SUPPLY BURBANK	000000022749231	1,089.61	GAXI-7520000-000000282856-1	2	01	0	81500	0	00000	81100	4310	7520000	21.74
SMARDAN SUPPLY BURBANK	000000022749231	1,089.61	GAXI-7520000-000000282860-1	3	01	0	81500	0	00000	81100	4310	7520000	368.71
SMARDAN SUPPLY BURBANK	000000022749231	1,089.61	GAXI-7520000-000000282861-1	4	01	0	81500	0	00000	81100	4310	7520000	420.80
SMARDAN SUPPLY BURBANK	000000022749231	1,089.61	GAXI-7520000-000000282862-1	5	01	0	81500	0	00000	81100	4310	7520000	148.53
SMARDAN SUPPLY BURBANK	000000022751686	2,340.98	GAXI-7520000-000000283000-1	11	01	0	81500	0	00000	81100	4310	7520000	49.64
SMARDAN SUPPLY BURBANK	000000022749231	1,089.61	GAXI-7520000-000000282863-1	6	01	0	81500	0	00000	81100	4310	7520000	79.26
SMARDAN SUPPLY BURBANK	000000022749231	1,089.61	GAXI-7520000-000000282864-1	7	01	0	81500	0	00000	81100	4310	7520000	22.13
SODE SCHOOL OF PERFORMING ARTS	000000022741683	1,866.70	GAXI-2030000-000000282585-1	1	01	0	90870	0	11100	10000	5810	2030000	1,866.70
SOLIANT	000000022728906	5,980.00	GAXI-7440000-000000281617-1	1	01	0	65000	0	57601	11804	5810	7440000	1,404.00
SOLIANT	000000022728906	5,980.00	GAXI-7440000-000000281618-1	2	01	0	65000	0	57601	11804	5810	7440000	2,106.00
SOLIANT	000000022728906	5,980.00	GAXI-7440000-000000281679-1	3	01	0	65000	0	57601	11804	5810	7440000	2,470.00
SOLIANT	000000022739058	2,606.50	GAXI-7440000-000000282548-1	2	01	0	65000	0	57601	11804	5810	7440000	617.50
SOLIANT	000000022739058	2,606.50	GAXI-7440000-000000282546-1	1	01	0	65000	0	57601	11804	5810	7440000	1,989.00
SOLIANT	000000022756419	2,161.25	GAXI-7440000-000000283061-1	1	01	0	65000	0	57601	11804	5810	7440000	2,161.25
SOLIANT	000000022771282	2,106.00	GAXI-7440000-000000283594-1	1	01	0	65000	0	57601	11804	5810	7440000	2,106.00
SONIA BANKS	202605260583970	1,248.29	GAXI-0000000-000000283131-1	1	67	0	00000	0	00000	60000	5810	0000000	1,248.29
SOUTHERN CALIFORNIA GAS COMPANY	000000022753994	10,199.20	GAXI-7400000-000000283020-1	1	01	0	00000	0	00000	82000	5510	7400000	10,199.20
SPARTAN TOOL LLC	000000022751687	6,804.60	GAXI-7520000-000000282850-1	1	01	0	81500	0	00000	81100	4410	7520000	6,804.60
SPEDEX CONSULTING, LLC	000000022739059	2,565.00	GAXI-7440000-000000282544-1	1	01	0	65000	0	57602	11900	5850	7440000	2,565.00
SPHERO, INC.	000000022761284	558.86	GAXI-2020000-000000283279-1	1	01	0	90870	0	11100	10000	4310	2020000	558.86
SPICERS PAPER CO	000000022734009	26,175.24	GAXI-0000000-000000282042-1	1	01	0	00000	0	00000	00000	9320	0000000	26,175.24
STELLA M VERANO	202605270584497	194.83	GAXI-0000000-000000283348-1	1	67	0	00000	0	00000	60000	5810	0000000	194.83

Vendor Name	Warrant Number	Warrant Amount	Payment Doc ID	Accounting Line No.	Fund	Sub-Fund	Resource	Project Year	Goal/Categorical	Function/Activity	Object	School Location/Dept	Line Amount
STEM SUPPLIES	000000022761285	309.70	GAXI-2090000-000000283417-1	1	01	0	00000	0	15000	10000	4310	2090000	309.70
SUSAN CONWAY	202605270584530	755.91	GAXI-0000000-000000283150-1	1	67	0	00000	0	00000	60000	5810	0000000	755.91
SUSAN DUNN	202605270584543	503.50	GAXI-0000000-000000283208-1	1	67	0	00000	0	00000	60000	5810	0000000	503.50
SUSAN J LEVY AUSTIN	202605260584007	1,269.81	GAXI-0000000-000000283262-1	1	67	0	00000	0	00000	60000	5810	0000000	1,269.81
SUSANNE LANE-LARMOUTH	202605260584016	409.70	GAXI-0000000-000000283259-1	1	67	0	00000	0	00000	60000	5810	0000000	409.70
SUSIE AVETISYAN	000000022749232	150.80	GAXI-7440000-000000282848-1	2	01	0	65200	0	50010	31101	5210	7440000	74.82
SUSIE AVETISYAN	000000022756420	93.45	GAXI-7440000-000000283031-1	1	01	0	65200	0	50010	31101	5210	7440000	28.78
SUSIE AVETISYAN	000000022749232	150.80	GAXI-7440000-000000282837-1	1	01	0	65200	0	50010	31101	5210	7440000	75.98
SUSIE AVETISYAN	000000022756420	93.45	GAXI-7440000-000000283032-1	2	01	0	65200	0	50010	31101	5210	7440000	64.67
SUZANNE ELIZABETH MCHORNEY	202605260584013	807.05	GAXI-0000000-000000283276-1	1	67	0	00000	0	00000	60000	5810	0000000	807.05
SWEETWATER SOUND INC	000000022746741	7,884.18	GAXI-7460000-000000282720-1	1	01	0	90806	0	11100	10000	4410	7460000	7,884.18
SWEETWATER SOUND INC	000000022771283	1,835.94	GAXI-7460000-000000283598-1	1	01	0	90806	0	11100	10000	5840	7460000	1,835.94
S.W. SCHOOL SUPPLY	000000022728903	6,029.57	GAXI-7420000-000000281627-1	1	01	0	00000	0	11100	10000	4310	7420000	152.93
S.W. SCHOOL SUPPLY	000000022761280	545.73	GAXI-2060000-000000283395-1	3	01	0	00000	0	11100	10000	4310	2060000	42.17
S.W. SCHOOL SUPPLY	000000022761280	545.73	GAXI-2060000-000000283396-1	4	01	0	00000	0	11100	10000	4310	2060000	57.35
S.W. SCHOOL SUPPLY	000000022761280	545.73	GAXI-2060000-000000283397-1	5	01	0	00000	0	11100	10000	4310	2060000	95.58
S.W. SCHOOL SUPPLY	000000022761280	545.73	GAXI-2060000-000000283398-1	6	01	0	00000	0	11100	10000	4310	2060000	57.35
S.W. SCHOOL SUPPLY	000000022728903	6,029.57	GAXI-2150000-000000281760-1	6	01	0	00000	0	11100	10000	4310	2150000	95.69
S.W. SCHOOL SUPPLY	000000022728903	6,029.57	GAXI-2150000-000000281761-1	7	01	0	00000	0	11100	10000	4310	2150000	121.96
S.W. SCHOOL SUPPLY	000000022728903	6,029.57	GAXI-2150000-000000281762-1	8	01	0	00000	0	11100	10000	4310	2150000	9.56
S.W. SCHOOL SUPPLY	000000022728903	6,029.57	GAXI-5170000-000000281771-1	16	01	0	65000	0	57601	11100	4310	5170000	184.99
S.W. SCHOOL SUPPLY	000000022728903	6,029.57	GAXI-2160000-000000281764-1	10	01	0	67700	1	11100	10000	4310	2160000	112.98
S.W. SCHOOL SUPPLY	000000022728903	6,029.57	GAXI-2160000-000000281765-1	11	01	0	67700	1	11100	10000	4310	2160000	4,314.15
S.W. SCHOOL SUPPLY	000000022728903	6,029.57	GAXI-2160000-000000281766-1	12	01	0	67700	1	11100	10000	4310	2160000	195.92
S.W. SCHOOL SUPPLY	000000022728903	6,029.57	GAXI-2160000-000000281767-1	13	01	0	67700	1	11100	10000	4310	2160000	269.82
S.W. SCHOOL SUPPLY	000000022728903	6,029.57	GAXI-2160000-000000281768-1	14	01	0	67700	1	11100	10000	4310	2160000	5.73
S.W. SCHOOL SUPPLY	000000022728903	6,029.57	GAXI-2160000-000000281769-1	15	01	0	67700	1	11100	10000	4310	2160000	323.78
S.W. SCHOOL SUPPLY	000000022728903	6,029.57	GAXI-2150000-000000281763-1	9	01	0	00000	0	11100	10000	4310	2150000	9.56
S.W. SCHOOL SUPPLY	000000022728903	6,029.57	GAXI-2020000-000000281633-1	3	01	0	00000	0	11100	10000	4310	2020000	91.45
S.W. SCHOOL SUPPLY	000000022728903	6,029.57	GAXI-2020000-000000281632-1	2	01	0	00000	0	11100	10000	4310	2020000	96.50
S.W. SCHOOL SUPPLY	000000022728903	6,029.57	GAXI-2030000-000000281639-1	5	01	0	00000	0	11100	10000	4310	2030000	14.01
S.W. SCHOOL SUPPLY	000000022728903	6,029.57	GAXI-2030000-000000281637-1	4	01	0	00000	0	11100	10000	4310	2030000	14.01
S.W. SCHOOL SUPPLY	000000022761280	545.73	GAXI-2060000-000000283401-1	7	01	0	00000	0	11100	10000	4310	2060000	26.85
S.W. SCHOOL SUPPLY	000000022728903	6,029.57	GAXI-5170000-000000281772-1	17	01	0	65000	0	57601	11100	4310	5170000	16.53
S.W. SCHOOL SUPPLY	000000022741680	250.99	GAXI-5330000-000000282608-1	1	11	0	00639	0	41100	10000	4310	5330000	0.99
S.W. SCHOOL SUPPLY	000000022741680	250.99	GAXI-5330000-000000282608-1	2	11	0	63910	0	41100	27000	4310	5330000	8.94
S.W. SCHOOL SUPPLY	000000022741680	250.99	GAXI-5330000-000000282609-1	3	11	0	00639	0	41100	10000	4310	5330000	6.84
S.W. SCHOOL SUPPLY	000000022741680	250.99	GAXI-5330000-000000282609-1	4	11	0	63910	0	41100	27000	4310	5330000	61.53
S.W. SCHOOL SUPPLY	000000022734006	202.09	GAXI-2010000-000000282256-1	1	01	0	00000	0	11100	10000	4310	2010000	105.40
S.W. SCHOOL SUPPLY	000000022734006	202.09	GAXI-2010000-000000282256-1	2	01	0	30100	2	11100	10000	4310	2010000	45.17
S.W. SCHOOL SUPPLY	000000022741680	250.99	GAXI-2020000-000000282617-1	6	01	0	00000	0	11100	10000	4310	2020000	42.03
S.W. SCHOOL SUPPLY	000000022741680	250.99	GAXI-2020000-000000282616-1	5	01	0	00000	0	11100	10000	4310	2020000	35.03
S.W. SCHOOL SUPPLY	000000022741680	250.99	GAXI-2020000-000000282618-1	7	01	0	00000	0	11100	10000	4310	2020000	95.63
S.W. SCHOOL SUPPLY	000000022734006	202.09	GAXI-2030000-000000282285-1	3	01	0	00000	0	11100	10000	4310	2030000	51.52
S.W. SCHOOL SUPPLY	000000022761280	545.73	GAXI-2060000-000000283410-1	8	01	0	00000	0	11100	10000	4310	2060000	21.02
S.W. SCHOOL SUPPLY	000000022751682	368.47	GAXI-5330000-000000282955-1	5	11	0	00639	0	41100	10000	4310	5330000	8.18
S.W. SCHOOL SUPPLY	000000022751682	368.47	GAXI-5330000-000000282955-1	6	11	0	63910	0	41100	27000	4310	5330000	73.58
S.W. SCHOOL SUPPLY	000000022751682	368.47	GAXI-5330000-000000282956-1	7	11	0	00639	0	41100	10000	4310	5330000	9.41
S.W. SCHOOL SUPPLY	000000022751682	368.47	GAXI-5330000-000000282956-1	8	11	0	63910	0	41100	27000	4310	5330000	84.71
S.W. SCHOOL SUPPLY	000000022751682	368.47	GAXI-5330000-000000282957-1	9	11	0	00639	0	41100	10000	4310	5330000	12.58
S.W. SCHOOL SUPPLY	000000022751682	368.47	GAXI-5330000-000000282957-1	10	11	0	63910	0	41100	27000	4310	5330000	113.19
S.W. SCHOOL SUPPLY	000000022751682	368.47	GAXI-2010000-000000282851-1	1	01	0	00000	0	11100	10000	4310	2010000	36.03
S.W. SCHOOL SUPPLY	000000022751682	368.47	GAXI-2010000-000000282851-1	2	01	0	30100	2	11100	10000	4310	2010000	15.44
S.W. SCHOOL SUPPLY	000000022751682	368.47	GAXI-2010000-000000282852-1	3	01	0	00000	0	11100	10000	4310	2010000	10.75
S.W. SCHOOL SUPPLY	000000022751682	368.47	GAXI-2010000-000000282852-1	4	01	0	30100	2	11100	10000	4310	2010000	4.60
S.W. SCHOOL SUPPLY	000000022761280	545.73	GAXI-2150000-000000283459-1	9	01	0	00000	0	11100	10000	4310	2150000	18.11
S.W. SCHOOL SUPPLY	000000022761280	545.73	GAXI-2150000-000000283460-1	10	01	0	00000	0	11100	10000	4310	2150000	34.59
S.W. SCHOOL SUPPLY	000000022761280	545.73	GAXI-2010000-000000283195-1	1	01	0	00000	0	11100	10000	4310	2010000	134.90
S.W. SCHOOL SUPPLY	000000022761280	545.73	GAXI-2010000-000000283195-1	2	01	0	30100	2	11100	10000	4310	2010000	57.81

Vendor Name	Warrant Number	Warrant Amount	Payment Doc ID	Accounting Line No.	Fund	Sub-Fund	Resource	Project Year	Goal/Categorical	Function/Activity	Object	School Location/Dept	Line Amount
TABWRITE LLC	000000022728908	1,500.00	GAXI-4310000-000000281770-1	1	01	0	42030	2	47600	10000	5840	4310000	1,500.00
TALLER DOS FLORES	000000022766026	34,775.00	GAXI-5330000-000000283012-1	1	11	0	63910	0	41104	85000	6205	5330000	34,775.00
TAMAR TACHIAN	000000022736670	341.90	GAXI-2030000-000000282492-1	1	01	0	90870	0	81000	50001	4395	2030000	341.90
TARGET SPECIALTY PRODUCTS	000000022731282	122.04	GAXI-7520000-000000281986-1	1	01	0	00100	0	00000	82200	4310	7520000	122.04
TBP/ARCHITECTURE, INC	000000022766027	3,318.07	GAXI-4320000-000000283025-1	1	21	0	00000	0	91008	85000	6250	4320000	3,318.07
TDS/OMNI&TSACG	202605060576712	21,464.47	GAXI-0000000-000000282149-1	1	76	0	00000	0	00000	00000	9550	0000000	21,464.47
TDS/OMNI&TSACG	202605070577177	164,720.05	GAXI-0000000-000000282146-1	1	76	0	00000	0	00000	00000	9518	0000000	164,720.05
TDS/OMNI&TSACG	202605060576713	600.00	GAXI-0000000-000000282150-1	1	76	0	00000	0	00000	00000	9550	0000000	600.00
TDS/OMNI&TSACG	202605060576710	20,115.00	GAXI-0000000-000000282147-1	1	76	0	00000	0	00000	00000	9518	0000000	20,115.00
TDS/OMNI&TSACG	202605060576711	3,700.00	GAXI-0000000-000000282148-1	1	76	0	00000	0	00000	00000	9518	0000000	3,700.00
TDS/OMNI&TSACG	202605080577542	895.00	GAXI-0000000-000000282581-1	1	76	0	00000	0	00000	00000	9550	0000000	895.00
TDS/OMNI&TSACG	202605080577541	19,435.00	GAXI-0000000-000000282580-1	1	76	0	00000	0	00000	00000	9518	0000000	19,435.00
TEACHER SYNERGY, LLC	000000022746742	105.21	GAXI-2150000-000000282652-1	1	01	0	42010	2	47600	10000	4310	2150000	105.21
TEXAS LIFE INSURANCE CO	000000022753995	4,136.86	GAXI-0000000-000000283030-1	1	76	0	00000	0	00000	00000	9562	0000000	4,136.86
THE ALMANSOR CENTER	000000022728909	25,690.04	GAXI-7440000-000000281554-1	1	01	0	65000	0	57601	11800	5810	7440000	1,691.19
THE ALMANSOR CENTER	000000022728909	25,690.04	GAXI-7440000-000000281556-1	2	01	0	65000	0	57601	11800	5810	7440000	4,133.16
THE ALMANSOR CENTER	000000022728909	25,690.04	GAXI-7440000-000000281556-1	3	01	0	65460	0	57601	11800	5810	7440000	210.26
THE ALMANSOR CENTER	000000022728909	25,690.04	GAXI-7440000-000000281558-1	4	01	0	65000	0	57601	11804	5810	7440000	3,850.64
THE ALMANSOR CENTER	000000022728909	25,690.04	GAXI-7440000-000000281558-1	5	01	0	65460	0	57601	11800	5810	7440000	210.26
THE ALMANSOR CENTER	000000022728909	25,690.04	GAXI-7440000-000000281561-1	6	01	0	65000	0	57601	11800	5810	7440000	6,315.95
THE ALMANSOR CENTER	000000022728909	25,690.04	GAXI-7440000-000000281606-1	9	01	0	65000	0	57601	11800	5810	7440000	7,294.35
THE ALMANSOR CENTER	000000022728909	25,690.04	GAXI-7440000-000000281562-1	7	01	0	65000	0	57601	11800	5810	7440000	1,879.10
THE ALMANSOR CENTER	000000022728909	25,690.04	GAXI-7440000-000000281562-1	8	01	0	65460	0	57601	11800	5810	7440000	105.13
THE ALMANSOR CENTER	000000022761286	23,814.61	GAXI-7440000-000000283430-1	1	01	0	65000	0	57601	11800	5810	7440000	2,067.01
THE ALMANSOR CENTER	000000022761286	23,814.61	GAXI-7440000-000000283433-1	2	01	0	65000	0	57601	11800	5810	7440000	3,456.42
THE ALMANSOR CENTER	000000022761286	23,814.61	GAXI-7440000-000000283433-1	3	01	0	65460	0	57601	11800	5810	7440000	420.52
THE ALMANSOR CENTER	000000022761286	23,814.61	GAXI-7440000-000000283434-1	4	01	0	65000	0	57601	11800	5810	7440000	3,738.50
THE ALMANSOR CENTER	000000022761286	23,814.61	GAXI-7440000-000000283434-1	5	01	0	65460	0	57601	11800	5810	7440000	210.26
THE ALMANSOR CENTER	000000022761286	23,814.61	GAXI-7440000-000000283435-1	6	01	0	65000	0	57601	11800	5810	7440000	5,642.26
THE ALMANSOR CENTER	000000022761286	23,814.61	GAXI-7440000-000000283436-1	7	01	0	65000	0	57601	11800	5810	7440000	6,859.14
THE ALMANSOR CENTER	000000022761286	23,814.61	GAXI-7440000-000000283437-1	8	01	0	65000	0	57601	11800	5810	7440000	1,315.37
THE ALMANSOR CENTER	000000022761286	23,814.61	GAXI-7440000-000000283437-1	9	01	0	65460	0	57601	11800	5810	7440000	105.13
THE CERAMIC SHOP	000000022761287	159.71	GAXI-2030000-000000283332-1	1	01	0	67700	2	11100	10000	4310	2030000	159.71
THE HILLSIDE SCHOOL & LEARNING CENTER	000000022734010	18,561.40	GAXI-7440000-000000282151-1	1	01	0	65000	0	57601	11800	5810	7440000	17,184.40
THE HILLSIDE SCHOOL & LEARNING CENTER	000000022734010	18,561.40	GAXI-7440000-000000282151-1	2	01	0	65460	0	57601	11800	5810	7440000	1,377.00
THEMES & VARIATIONS - MUSIC PLAY	000000022771284	1,200.00	GAXI-7460000-000000283602-1	1	01	0	90806	0	11100	10000	5840	7460000	1,200.00
THERESA NICOLAOU	202605270584469	194.83	GAXI-0000000-000000283290-1	1	67	0	00000	0	00000	60000	5810	0000000	194.83
THERESA SETTLEMOIR	202605270584475	377.43	GAXI-0000000-000000283336-1	1	67	0	00000	0	00000	60000	5810	0000000	377.43
THERESA SETTLEMOIR	202604300574001	377.43	GAXI-0000000-000000281597-1	1	67	0	00000	0	00000	60000	5810	0000000	377.43
THERESA VARGAS	000000022739060	129.00	GAXI-3210000-000000282499-1	1	01	0	30100	2	11100	10000	5220	3210000	129.00
THERESA VARGAS	000000022771285	1,032.00	GAXI-3210000-000000283570-1	1	01	0	42010	2	47600	10000	5220	3210000	1,032.00
THE STANDARD INSURANCE COMPANY	000000022734011	9,260.90	GAXI-0000000-000000282290-1	1	76	0	00000	0	00000	00000	9567	0000000	9,260.90
THE STANDARD INSURANCE COMPANY	000000022756421	246.29	GAXI-0000000-000000283109-1	1	76	0	00000	0	00000	00000	9567	0000000	246.29
THE STEPPING STONES GROUP, LLC	000000022749234	11,590.00	GAXI-7440000-000000282662-1	1	01	0	65000	0	57601	11804	5810	7440000	11,590.00
TIFFANY DESIMONE	202605270584499	807.05	GAXI-0000000-000000283200-1	1	67	0	00000	0	00000	60000	5810	0000000	807.05
TIFFANY DESIMONE	202604300574009	807.05	GAXI-0000000-000000281210-1	1	67	0	00000	0	00000	60000	5810	0000000	807.05
TIME AND ALARM SYSTEMS	000000022744274	4,286.33	GAXI-7520000-000000282629-1	1	01	0	81500	0	00000	81100	4310	7520000	4,286.33
TIMMY CHIN	202605260584002	1,269.81	GAXI-0000000-000000283146-1	1	67	0	00000	0	00000	60000	5810	0000000	1,269.81
TIMOTHY TRACE	202605270584496	377.43	GAXI-0000000-000000283346-1	1	67	0	00000	0	00000	60000	5810	0000000	377.43
TIMOTHY TRACE	202604300574006	377.43	GAXI-0000000-000000281598-1	1	67	0	00000	0	00000	60000	5810	0000000	377.43
TINA NUNEZ TELLEZ	202605270584518	194.83	GAXI-0000000-000000283291-1	1	67	0	00000	0	00000	60000	5810	0000000	194.83
TINY HANDS THERAPY INC	000000022749235	22,540.00	GAXI-7440000-000000282664-1	1	01	0	65000	0	57602	11900	5850	7440000	22,540.00
TMK HAWK PARENT, CORP	000000022761288	775.00	GAXI-7460000-000000283438-1	1	01	0	35500	0	38000	10000	4410	7460000	775.00
T-MOBILE	000000022744273	469.52	GAXI-7400000-000000282647-1	1	01	0	00000	0	00000	72000	5910	7400000	469.52
T-MOBILE	000000022749233	130.91	GAXI-7440000-000000282654-1	1	01	0	65000	0	57602	11100	4310	7440000	65.45
T-MOBILE	000000022749233	130.91	GAXI-7440000-000000282655-1	2	01	0	65200	0	57602	11100	4310	7440000	65.46
T-MOBILE	000000022728907	280.14	GAXI-7400000-000000281608-1	2	01	0	00000	0	00000	72000	5910	7400000	140.04
T-MOBILE	000000022728907	280.14	GAXI-7400000-000000281607-1	1	01	0	00000	0	00000	72000	5910	7400000	140.10
T-MOBILE	000000022731281	703.78	GAXI-7400000-000000282001-1	3	01	0	00000	0	00000	77000	5916	7400000	270.00

Vendor Name	Warrant Number	Warrant Amount	Payment Doc ID	Accounting Line No.	Fund	Sub-Fund	Resource	Project Year	Goal/Categorical	Function/Activity	Object	School Location/Dept	Line Amount
T-MOBILE	000000022731281	703.78	GAXI-7400000-000000282000-1	2	01	0	00000	0	00000	77000	5916	7400000	270.00
T-MOBILE	000000022731281	703.78	GAXI-7520000-000000281992-1	1	01	0	00100	0	00000	82000	5910	7520000	163.78
TONYA WILKEN	000000022768178	755.91	GAXI-0000000-000000283355-1	1	67	0	00000	0	00000	60000	5810	0000000	755.91
TOOLEY, LAURA	202605270584474	1,269.81	GAXI-0000000-000000283345-1	1	67	0	00000	0	00000	60000	5810	0000000	1,269.81
TOTAL APPTITUDE	000000022751688	996.00	GAXI-2160000-000000282658-1	1	01	0	30100	2	11100	10000	5840	2160000	996.00
TRACI ANN FELLMAN	202605270584532	890.89	GAXI-0000000-000000283217-1	1	67	0	00000	0	00000	60000	5810	0000000	890.89
TRACI ANN FELLMAN	202604300574022	890.89	GAXI-0000000-000000281591-1	1	67	0	00000	0	00000	60000	5810	0000000	890.89
TREERING CORPORATION	000000022736671	243.81	GAXI-2060000-000000282465-1	1	01	0	90870	0	11100	10000	4310	2060000	243.81
TROPHY KING & GIFTS	000000022766028	176.80	GAXI-5300000-000000283560-1	1	01	0	90201	0	11100	10000	4310	5300000	176.80
TRULITE GLASS & ALUMINUM	000000022766029	90.73	GAXI-7520000-000000283539-1	1	01	0	81500	0	00000	81100	4310	7520000	90.73
TTF HOLDING LOCKBOX	000000022739061	20,040.00	GAXI-7440000-000000282542-1	1	01	0	65000	0	57601	11804	5810	7440000	11,160.00
TTF HOLDING LOCKBOX	000000022739061	20,040.00	GAXI-7440000-000000282543-1	2	01	0	65000	0	57601	11804	5810	7440000	8,880.00
TTF HOLDING LOCKBOX	000000022756422	2,880.00	GAXI-7440000-000000283076-1	1	01	0	65000	0	57601	11804	5810	7440000	2,880.00
UINTA ACADEMY RTC, LLC	000000022734012	19,644.00	GAXI-7440000-000000282034-1	1	01	0	65000	0	57601	11800	5810	7440000	14,169.00
UINTA ACADEMY RTC, LLC	000000022734012	19,644.00	GAXI-7440000-000000282034-1	2	01	0	65460	0	57601	11800	5810	7440000	5,475.00
ULINE - Attn: ACCOUNTS RECEIVABLES	000000022771286	4,177.61	GAXI-4310000-000000283647-1	2	01	0	00000	0	11100	10000	4310	4310000	1,278.54
ULINE - Attn: ACCOUNTS RECEIVABLES	000000022728910	412.92	GAXI-4310000-000000281621-1	1	01	0	67700	2	11100	10000	4310	4310000	412.92
ULINE - Attn: ACCOUNTS RECEIVABLES	000000022731283	556.83	GAXI-7520000-000000281993-1	1	01	0	00100	0	00000	82200	4310	7520000	556.83
ULINE - Attn: ACCOUNTS RECEIVABLES	000000022741684	1,423.44	GAXI-5330000-000000282589-1	1	11	0	63910	0	41101	82100	4310	5330000	118.85
ULINE - Attn: ACCOUNTS RECEIVABLES	000000022741684	1,423.44	GAXI-5330000-000000282589-1	2	11	0	63910	0	41102	82100	4310	5330000	118.86
ULINE - Attn: ACCOUNTS RECEIVABLES	000000022741684	1,423.44	GAXI-5330000-000000282589-1	3	11	0	63910	0	41104	82100	4310	5330000	118.86
ULINE - Attn: ACCOUNTS RECEIVABLES	000000022741684	1,423.44	GAXI-5330000-000000282589-1	4	11	0	63910	0	41106	82100	4310	5330000	118.44
ULINE - Attn: ACCOUNTS RECEIVABLES	000000022741684	1,423.44	GAXI-5330000-000000282589-1	5	11	0	63910	0	41101	82100	4410	5330000	237.11
ULINE - Attn: ACCOUNTS RECEIVABLES	000000022741684	1,423.44	GAXI-5330000-000000282589-1	6	11	0	63910	0	41102	82100	4410	5330000	237.11
ULINE - Attn: ACCOUNTS RECEIVABLES	000000022741684	1,423.44	GAXI-5330000-000000282589-1	7	11	0	63910	0	41104	82100	4410	5330000	237.11
ULINE - Attn: ACCOUNTS RECEIVABLES	000000022741684	1,423.44	GAXI-5330000-000000282589-1	8	11	0	63910	0	41106	82100	4410	5330000	237.10
ULINE - Attn: ACCOUNTS RECEIVABLES	000000022771286	4,177.61	GAXI-5080000-000000283587-1	1	01	0	67700	1	11100	10000	4310	5080000	2,899.07
ULINE - Attn: ACCOUNTS RECEIVABLES	000000022766030	1,839.29	GAXI-7520000-000000283554-1	1	01	0	00100	0	00000	82200	4310	7520000	1,839.29
UME FEDERAL CREDIT UNION	000000022734013	19,154.00	GAXI-0000000-000000282294-1	1	76	0	00000	0	00000	00000	9517	0000000	19,154.00
UME FEDERAL CREDIT UNION	000000022756423	2,375.00	GAXI-0000000-000000283110-1	1	76	0	00000	0	00000	00000	9517	0000000	2,375.00
UNITED SITE SERVICES	000000022739062	380.76	GAXI-7520000-000000282008-1	1	01	0	81500	0	00000	81100	5611	7520000	190.38
UNITED SITE SERVICES	000000022739062	380.76	GAXI-7520000-000000282010-1	2	01	0	90710	0	00000	82100	5611	7520000	190.38
UPLIFT THERAPY CNETER LLC	000000022739063	1,000.00	GAXI-7440000-000000282549-1	1	01	0	65000	0	57602	11900	5850	7440000	200.00
UPLIFT THERAPY CNETER LLC	000000022739063	1,000.00	GAXI-7440000-000000282550-1	2	01	0	65000	0	57602	11900	5850	7440000	200.00
UPLIFT THERAPY CNETER LLC	000000022739063	1,000.00	GAXI-7440000-000000282551-1	3	01	0	65000	0	57602	11900	5850	7440000	200.00
UPLIFT THERAPY CNETER LLC	000000022739063	1,000.00	GAXI-7440000-000000282552-1	4	01	0	65000	0	57602	11900	5850	7440000	200.00
UPLIFT THERAPY CNETER LLC	000000022739063	1,000.00	GAXI-7440000-000000282553-1	5	01	0	65000	0	57602	11900	5850	7440000	200.00
UPLIFT THERAPY CNETER LLC	000000022756424	800.00	GAXI-7440000-000000283043-1	3	01	0	65000	0	57602	11900	5850	7440000	200.00
UPLIFT THERAPY CNETER LLC	000000022756424	800.00	GAXI-7440000-000000283044-1	4	01	0	65000	0	57602	11900	5850	7440000	200.00
UPLIFT THERAPY CNETER LLC	000000022756424	800.00	GAXI-7440000-000000283041-1	1	01	0	65000	0	57602	11900	5850	7440000	200.00
UPLIFT THERAPY CNETER LLC	000000022756424	800.00	GAXI-7440000-000000283042-1	2	01	0	65000	0	57602	11900	5850	7440000	200.00
US AIR CONDITIONING DISTRIBUTORS	000000022731284	385.65	GAXI-7520000-000000281997-1	1	01	0	81500	0	00000	81100	4310	7520000	287.30
US AIR CONDITIONING DISTRIBUTORS	000000022731284	385.65	GAXI-7520000-000000282002-1	2	01	0	81500	0	00000	81100	4310	7520000	98.35
U S BANK	000000022749236	250.00	GAXI-7400000-000000282710-1	1	40	0	90329	0	00000	85000	5890	7400000	250.00
US BANK NATIONAL ASSOCIATION	000000022751689	70.21	GAXI-7400000-000000282811-1	1	01	0	00000	0	00000	72000	5803	7400000	70.21
U S POSTAL SERVICE	000000022746743	15,000.00	GAXI-7400000-000000282712-1	1	01	0	00000	0	00000	72000	5920	7400000	15,000.00
VALERIA NAVA	000000022736672	170.00	GAXI-4320000-000000282487-1	1	01	0	00000	0	13000	10000	5840	4320000	170.00
VALERIE CAFARELLA	000000022766031	377.43	GAXI-0000000-000000283142-1	1	67	0	00000	0	00000	60000	5810	0000000	377.43
VALERIE CAFARELLA	000000022724223	377.43	GAXI-0000000-000000281589-1	1	67	0	00000	0	00000	60000	5810	0000000	377.43
VANAMAN GERMAN LLC ATTORNEYS AT LAW	000000022728911	6,000.00	GAXI-7440000-000000279478-1	1	01	0	65000	0	50010	21000	5820	7440000	6,000.00
VANOOHI SARKISSIAN	202605270584488	755.91	GAXI-0000000-000000283312-1	1	67	0	00000	0	00000	60000	5810	0000000	755.91
VERONICA ABRAMIAN SETAGHIAN	202605270584545	503.50	GAXI-0000000-000000283334-1	1	67	0	00000	0	00000	60000	5810	0000000	503.50
VICKI G THALHEIMER	202605270584527	1,269.81	GAXI-0000000-000000283340-1	1	67	0	00000	0	00000	60000	5810	0000000	1,269.81
VICTORIA DIAZ	202605270584529	377.43	GAXI-0000000-000000283206-1	1	67	0	00000	0	00000	60000	5810	0000000	377.43
VICTORIA DIAZ	202604300574020	755.91	GAXI-0000000-000000281216-1	1	67	0	00000	0	00000	60000	5810	0000000	755.91
VILLA ESPERANZA SERVICES	000000022749237	5,065.24	GAXI-7440000-000000282598-1	1	01	0	65000	0	57601	11800	5810	7440000	5,065.24
VISION SERVICE PLAN	000000022766032	30,263.64	GAXI-0000000-000000283557-1	3	01	0	90909	0	00000	00000	9530	0000000	7,213.58
VISION SERVICE PLAN	000000022766032	30,263.64	GAXI-0000000-000000283556-1	2	01	0	90908	0	00000	00000	9560	0000000	18.08
VISION SERVICE PLAN	000000022766032	30,263.64	GAXI-0000000-000000283559-1	5	01	0	00000	0	00000	00000	9530	0000000	1,944.02

Vendor Name	Warrant Number	Warrant Amount	Payment Doc ID	Accounting Line No.	Fund	Sub-Fund	Resource	Project Year	Goal/Categorical	Function/Activity	Object	School Location/Dept	Line Amount
VISION SERVICE PLAN	000000022766032	30,263.64	GAXI-0000000-000000283558-1	4	01	0	00000	0	00000	00000	9530	0000000	8,589.68
VISION SERVICE PLAN	000000022766032	30,263.64	GAXI-0000000-000000283555-1	1	01	0	00000	0	00000	00000	9530	0000000	12,498.28
VIVIAN ZAKARIAN	000000022766033	47.91	GAXI-2030000-000000283574-1	1	01	0	00000	0	11100	10000	4310	2030000	47.91
VOSS, TAMARA	000000022739064	2,242.88	GAXI-7440000-000000282556-1	1	01	0	65000	0	50010	36000	5813	7440000	2,242.88
WARD'S NATURAL SCIENCE	000000022746744	1,112.26	GAXI-4320000-000000280968-1	1	01	0	00000	0	13400	10000	4310	4320000	-736.87
WARD'S NATURAL SCIENCE	000000022746744	1,112.26	GAXI-4320000-000000280969-1	2	01	0	00000	0	13400	10000	4310	4320000	714.50
WARD'S NATURAL SCIENCE	000000022746744	1,112.26	GAXI-4320000-000000282733-1	3	01	0	00000	0	13400	10000	4310	4320000	1,063.53
WARD'S NATURAL SCIENCE	000000022746744	1,112.26	GAXI-4320000-000000282733-1	4	01	0	00000	0	11100	10000	4310	4320000	71.10
WAXIE SANITARY SUPPLY	000000022749238	12,786.29	GAXI-7520000-000000282786-1	3	01	0	00100	0	00000	82100	4310	7520000	535.48
WAXIE SANITARY SUPPLY	000000022749238	12,786.29	GAXI-7520000-000000282785-1	2	01	0	00100	0	00000	82100	4310	7520000	353.51
WAXIE SANITARY SUPPLY	000000022731285	16,124.33	GAXI-7520000-000000282011-1	1	01	0	00100	0	00000	82100	4310	7520000	108.67
WAXIE SANITARY SUPPLY	000000022731285	16,124.33	GAXI-7520000-000000282012-1	2	01	0	00100	0	00000	82100	4310	7520000	154.35
WAXIE SANITARY SUPPLY	000000022731285	16,124.33	GAXI-7520000-000000282015-1	5	01	0	00100	0	00000	82100	4310	7520000	108.67
WAXIE SANITARY SUPPLY	000000022731285	16,124.33	GAXI-7520000-000000282016-1	6	01	0	00100	0	00000	82100	4310	7520000	108.67
WAXIE SANITARY SUPPLY	000000022731285	16,124.33	GAXI-7520000-000000282013-1	3	01	0	00100	0	00000	82100	4310	7520000	141.82
WAXIE SANITARY SUPPLY	000000022731285	16,124.33	GAXI-7520000-000000282014-1	4	01	0	00100	0	00000	82100	4310	7520000	480.34
WAXIE SANITARY SUPPLY	000000022731285	16,124.33	GAXI-7520000-000000282017-1	7	01	0	00100	0	00000	82100	4310	7520000	1,664.91
WAXIE SANITARY SUPPLY	000000022731285	16,124.33	GAXI-7520000-000000282018-1	8	01	0	00100	0	00000	82100	4310	7520000	986.11
WAXIE SANITARY SUPPLY	000000022731285	16,124.33	GAXI-7520000-000000282019-1	9	01	0	00100	0	00000	82100	4310	7520000	2,668.58
WAXIE SANITARY SUPPLY	000000022731285	16,124.33	GAXI-7520000-000000282020-1	10	01	0	00100	0	00000	82100	4310	7520000	1,921.51
WAXIE SANITARY SUPPLY	000000022731285	16,124.33	GAXI-7520000-000000282021-1	11	01	0	00100	0	00000	82100	4310	7520000	1,143.63
WAXIE SANITARY SUPPLY	000000022731285	16,124.33	GAXI-7520000-000000282023-1	13	01	0	00100	0	00000	82100	4310	7520000	3,152.61
WAXIE SANITARY SUPPLY	000000022731285	16,124.33	GAXI-7520000-000000282022-1	12	01	0	00100	0	00000	82100	4310	7520000	995.56
WAXIE SANITARY SUPPLY	000000022731285	16,124.33	GAXI-7520000-000000282024-1	14	01	0	00100	0	00000	82100	4310	7520000	2,488.90
WAXIE SANITARY SUPPLY	000000022749238	12,786.29	GAXI-7520000-000000282788-1	5	01	0	00100	0	00000	82100	4310	7520000	1,254.24
WAXIE SANITARY SUPPLY	000000022749238	12,786.29	GAXI-7520000-000000282789-1	6	01	0	00100	0	00000	82100	4310	7520000	592.10
WAXIE SANITARY SUPPLY	000000022749238	12,786.29	GAXI-7520000-000000282790-1	7	01	0	00100	0	00000	82100	4310	7520000	463.20
WAXIE SANITARY SUPPLY	000000022749238	12,786.29	GAXI-7520000-000000282791-1	8	01	0	00100	0	00000	82100	4310	7520000	432.29
WAXIE SANITARY SUPPLY	000000022749238	12,786.29	GAXI-7520000-000000282792-1	9	01	0	00100	0	00000	82100	4310	7520000	1,122.70
WAXIE SANITARY SUPPLY	000000022749238	12,786.29	GAXI-7520000-000000282793-1	10	01	0	00100	0	00000	82100	4310	7520000	3,231.65
WAXIE SANITARY SUPPLY	000000022749238	12,786.29	GAXI-7520000-000000282787-1	4	01	0	00100	0	00000	82100	4310	7520000	2,810.60
WAXIE SANITARY SUPPLY	000000022749238	12,786.29	GAXI-7520000-000000282794-1	11	01	0	00100	0	00000	82100	4310	7520000	4.62
WAXIE SANITARY SUPPLY	000000022749238	12,786.29	GAXI-7520000-000000282795-1	12	01	0	00100	0	00000	82100	4310	7520000	18.48
WAXIE SANITARY SUPPLY	000000022749238	12,786.29	GAXI-7520000-000000282796-1	13	01	0	00100	0	00000	82100	4310	7520000	427.17
WAXIE SANITARY SUPPLY	000000022749238	12,786.29	GAXI-7520000-000000282797-1	14	01	0	00100	0	00000	82100	4310	7520000	427.17
WAXIE SANITARY SUPPLY	000000022751690	1,580.03	GAXI-7520000-000000283004-1	1	01	0	00100	0	00000	82100	4310	7520000	40.53
WAXIE SANITARY SUPPLY	000000022751690	1,580.03	GAXI-7520000-000000283005-1	2	01	0	00100	0	00000	82100	4310	7520000	521.57
WAXIE SANITARY SUPPLY	000000022751690	1,580.03	GAXI-7520000-000000283006-1	3	01	0	00100	0	00000	82100	4310	7520000	361.81
WAXIE SANITARY SUPPLY	000000022751690	1,580.03	GAXI-7520000-000000283007-1	4	01	0	00100	0	00000	82100	4310	7520000	476.87
WAXIE SANITARY SUPPLY	000000022751690	1,580.03	GAXI-7520000-000000283008-1	5	01	0	00100	0	00000	82100	4310	7520000	179.25
WAXIE SANITARY SUPPLY	000000022749238	12,786.29	GAXI-7520000-000000282783-1	1	01	0	00100	0	00000	82100	4310	7520000	1,113.08
WEISS, JOSHUA	000000022766034	216.00	GAXI-3210000-000000283572-1	1	01	0	30100	2	11100	10000	5840	3210000	216.00
WENGER CORPORATION	000000022734014	2,949.40	GAXI-4310000-000000282046-1	1	01	0	90704	0	11100	10000	4310	4310000	2,949.40
WESTERN EXTERMINATOR	000000022749239	114.24	GAXI-7490000-000000282606-1	1	13	0	53100	0	00000	82000	5570	7490000	114.24
WESTERN PSYCHOLOGICAL SERVICES	000000022731286	943.23	GAXI-7440000-000000282007-1	1	01	0	00000	0	11100	31600	4311	7440000	943.23
WESTERN PSYCHOLOGICAL SERVICES	000000022751691	150.00	GAXI-7440000-000000282869-1	1	01	0	00000	0	11100	31600	4311	7440000	150.00
WESTERN PSYCHOLOGICAL SERVICES	000000022771287	1,200.00	GAXI-7440000-000000283591-1	1	01	0	00000	0	11100	31600	4311	7440000	1,200.00
WILLIAM V MACGILL & COMPANY	000000022746745	250.63	GAXI-2160000-000000282657-1	1	01	0	00000	0	00000	31400	4310	2160000	250.63
WRIGHT'S SUPPLY INC	000000022751692	90.09	GAXI-7520000-000000283010-1	2	01	0	81500	0	00000	81100	4310	7520000	75.31
WRIGHT'S SUPPLY INC	000000022751692	90.09	GAXI-7520000-000000283009-1	1	01	0	81500	0	00000	81100	4310	7520000	14.78
YESENIA LOPEZ	000000022766035	445.68	GAXI-3200000-000000283579-1	1	01	0	00000	0	11100	10000	4310	3200000	445.68
YVETTE VELASCO	000000022736673	184.50	GAXI-4310000-000000282503-1	1	01	0	67700	2	11100	10000	4310	4310000	184.50
YVETTE VELASCO	000000022744275	111.12	GAXI-4310000-000000282505-1	1	01	0	00000	0	12000	10000	5840	4310000	111.12
ZARE MANOUKIAN	000000022771288	179.00	GAXI-3200000-000000283577-1	1	01	0	30100	2	11100	10000	5220	3200000	179.00
ZEN EDUCATE INC	000000022771289	9,729.60	GAXI-7540000-000000283603-1	1	12	0	90602	0	11100	10000	5850	7540000	659.00
ZEN EDUCATE INC	000000022771289	9,729.60	GAXI-7540000-000000283604-1	2	12	0	90602	0	11100	10000	5850	7540000	1,138.20
ZEN EDUCATE INC	000000022771289	9,729.60	GAXI-7540000-000000283605-1	3	12	0	90602	0	11100	10000	5850	7540000	766.80
ZEN EDUCATE INC	000000022771289	9,729.60	GAXI-7540000-000000283606-1	4	12	0	90602	0	11100	10000	5850	7540000	1,258.00
ZEN EDUCATE INC	000000022771289	9,729.60	GAXI-7540000-000000283607-1	5	12	0	90602	0	11100	10000	5850	7540000	1,233.29

Vendor Name	Warrant Number	Warrant Amount	Payment Doc ID	Accounting Line No.	Fund	Sub-Fund	Resource	Project Year	Goal/Categorical	Function/Activity	Object	School Location/Dept	Line Amount
ZEN EDUCATE INC	000000022771289	9,729.60	GAXI-7540000-000000283608-1	6	12	0	90602	0	11100	10000	5850	7540000	988.45
ZEN EDUCATE INC	000000022771289	9,729.60	GAXI-7540000-000000283609-1	7	12	0	90602	0	11100	10000	5850	7540000	1,033.38
ZEN EDUCATE INC	000000022728912	4,980.48	GAXI-7440000-000000281850-1	1	01	0	65000	0	57601	11804	5810	7440000	1,685.51
ZEN EDUCATE INC	000000022728912	4,980.48	GAXI-7440000-000000281851-1	2	01	0	65000	0	57601	11804	5810	7440000	835.92
ZEN EDUCATE INC	000000022728912	4,980.48	GAXI-7440000-000000281852-1	3	01	0	65000	0	57601	11804	5810	7440000	1,522.27
ZEN EDUCATE INC	000000022771289	9,729.60	GAXI-7540000-000000283610-1	8	12	0	90602	0	11100	10000	5850	7540000	807.28
ZEN EDUCATE INC	000000022728912	4,980.48	GAXI-7440000-000000281853-1	4	01	0	65000	0	57601	11804	5810	7440000	936.78
ZEN EDUCATE INC	000000022756425	12,740.63	GAXI-7440000-000000282940-1	1	01	0	65000	0	57601	11804	5810	7440000	1,639.17
ZEN EDUCATE INC	000000022771289	9,729.60	GAXI-7540000-000000283611-1	9	12	0	90602	0	11100	10000	5850	7540000	659.00
ZEN EDUCATE INC	000000022739065	6,384.37	GAXI-7440000-000000282341-1	1	01	0	65000	0	57601	11804	5810	7440000	2,096.77
ZEN EDUCATE INC	000000022756425	12,740.63	GAXI-7440000-000000282941-1	2	01	0	65000	0	57601	11804	5810	7440000	1,873.37
ZEN EDUCATE INC	000000022739065	6,384.37	GAXI-7440000-000000282342-1	2	01	0	65000	0	57601	11804	5810	7440000	1,170.98
ZEN EDUCATE INC	000000022739065	6,384.37	GAXI-7440000-000000282343-1	3	01	0	65000	0	57601	11804	5810	7440000	2,071.72
ZEN EDUCATE INC	000000022739065	6,384.37	GAXI-7440000-000000282344-1	4	01	0	65000	0	57601	11804	5810	7440000	1,044.90
ZEN EDUCATE INC	000000022756425	12,740.63	GAXI-7440000-000000282942-1	3	01	0	65000	0	57601	11804	5810	7440000	234.00
ZEN EDUCATE INC	000000022756425	12,740.63	GAXI-7440000-000000282943-1	4	01	0	65000	0	57601	11804	5810	7440000	468.26
ZEN EDUCATE INC	000000022771289	9,729.60	GAXI-7540000-000000283612-1	10	12	0	90602	0	11100	10000	5850	7540000	527.20
ZEN EDUCATE INC	000000022756425	12,740.63	GAXI-7440000-000000282944-1	5	01	0	65000	0	57601	11804	5810	7440000	1,044.90
ZEN EDUCATE INC	000000022756425	12,740.63	GAXI-7440000-000000282945-1	6	01	0	65000	0	57601	11804	5810	7440000	2,341.63
ZEN EDUCATE INC	000000022756425	12,740.63	GAXI-7440000-000000282946-1	7	01	0	65000	0	57601	11804	5810	7440000	2,110.67
ZEN EDUCATE INC	000000022756425	12,740.63	GAXI-7440000-000000282947-1	8	01	0	65000	0	57601	11804	5810	7440000	1,170.98
ZEN EDUCATE INC	000000022756425	12,740.63	GAXI-7440000-000000282948-1	9	01	0	65000	0	57601	11804	5810	7440000	1,857.65
ZEN EDUCATE INC	000000022766036	6,586.60	GAXI-7440000-000000283549-1	1	01	0	65000	0	57601	11804	5810	7440000	2,071.72
ZEN EDUCATE INC	000000022766036	6,586.60	GAXI-7440000-000000283550-1	2	01	0	65000	0	57601	11804	5810	7440000	1,163.18
ZEN EDUCATE INC	000000022771289	9,729.60	GAXI-7540000-000000283613-1	11	12	0	90602	0	11100	10000	5850	7540000	659.00
ZEN EDUCATE INC	000000022766036	6,586.60	GAXI-7440000-000000283551-1	3	01	0	65000	0	57601	11804	5810	7440000	1,010.07
ZEN EDUCATE INC	000000022766036	6,586.60	GAXI-7440000-000000283552-1	4	01	0	65000	0	57601	11804	5810	7440000	2,341.63

7,863,396.45

Burbank Unified School District
Fiscal Services

REPORT TO THE BOARD

TO:	Members of the Board of Education
FROM:	Maricela Salinas, Director, Fiscal Services
PREPARED BY:	Rosetta Wallace, Account Analyst
SUBMITTED BY:	Cheretta Wade, Administrative Secretary II, Business Services
DATE:	June 25, 2026
SUBJECT:	Miscellaneous Receipts Report – May 2026

Background:
This item provides the Board of Education with a monthly informational report summarizing miscellaneous receipts received by the District for the period of May 1, 2026 through May 31, 2026.

This report will be presented monthly to enhance fiscal transparency and provide regular updates regarding non-Formula revenue activity.

Discussion/Issues:
As a matter of best practice in fiscal oversight and governance, Business Services is implementing a monthly Miscellaneous Receipts Report to provide the Board and the community with greater visibility into revenue received outside of the District's primary state apportionment funding. While the District regularly reports on budget status through interim reports and financial statements, these reports often aggregate revenues into broader categories. The Miscellaneous Receipts Report is designed to supplement those required financial reports by identifying and summarizing discrete revenue transactions as they occur.

This report captures revenues such as developer fees, donations and gifts, grants, reimbursements, refunds, billable services, rental income, and other miscellaneous receipts that are deposited into various district funds. By providing this level of detail on a monthly basis, the District reinforces its commitment to transparency, strengthens internal financial monitoring, and ensures that the Board is informed of material revenue activity in a timely manner. This practice supports proactive fiscal management, improves communication with stakeholders, and aligns with the District's broader efforts to enhance financial accountability. The detailed transaction listing for the reporting period is attached for review.

SUMMARY OF RECEIPTS

May 2026

Category	**Amount**
Donations / Gifts / Grants	$1,653,651.16
Refunds	$839.13

Reimbursements	$21,722.86
Billables	$5,158.43
Developer Fees	$111,877.76
Cash Deposits	$7,982.45
Use of Facilities	$26,506.00
Miscellaneous Receipts	$165.00
Total May Activity	**$1,357,816.00**

MONTH TOTAL
Total Miscellaneous Receipts: **$1,827,902.79**

Fiscal Impact: (if any)
$1,827,902.79

Receipts are deposited into the appropriate funds in accordance with legal and programmatic requirements. Developer fees are recorded in Fund 25, donations and grants are deposited consistent with donor intent, reimbursements offset corresponding expenditures, and restricted revenues are applied to their designated programs.

Recommendation:
This item is presented for information only. No Board action is required.

LOCATION	AMOUNT	DATE REC	DESCRIPTION	REV STRING
DISTRICT OFFICE	69.43	5/7/2026	RETIREE BENEFITS	01.0-90909.0-00000-00000-9530-00000000000
DISTRICT OFFICE	132.34	5/7/2026	RETIREE BENEFITS	01.0-90909.0-00000-00000-9530-00000000000
DISTRICT OFFICE	69.43	5/7/2026	RETIREE BENEFITS	01.0-90909.0-00000-00000-9530-00000000000
DISTRICT OFFICE	134.12	5/7/2026	RETIREE BENEFITS	01.0-90909.0-00000-00000-9530-00000000000
DISTRICT OFFICE	121.52	5/7/2026	RETIREE BENEFITS	01.0-90909.0-00000-00000-9530-00000000000
DISTRICT OFFICE	69.43	5/7/2026	RETIREE BENEFITS	01.0-90909.0-00000-00000-9530-00000000000
DISTRICT OFFICE	208.29	5/7/2026	RETIREE BENEFITS	01.0-90909.0-00000-00000-9530-00000000000
DISTRICT OFFICE	121.52	5/7/2026	RETIREE BENEFITS	01.0-90909.0-00000-00000-9530-00000000000
DISTRICT OFFICE	144.94	5/7/2026	RETIREE BENEFITS	01.0-90909.0-00000-00000-9530-00000000000
DISTRICT OFFICE	69.43	5/7/2026	RETIREE BENEFITS	01.0-90909.0-00000-00000-9530-00000000000
DISTRICT OFFICE	10.82	5/7/2026	RETIREE BENEFITS	01.0-90909.0-00000-00000-9530-00000000000
DISTRICT OFFICE	69.43	5/7/2026	RETIREE BENEFITS	01.0-90909.0-00000-00000-9530-00000000000
DISTRICT OFFICE	69.43	5/7/2026	RETIREE BENEFITS	01.0-90909.0-00000-00000-9530-00000000000
DISTRICT OFFICE	144.94	5/7/2026	RETIREE BENEFITS	01.0-90909.0-00000-00000-9530-00000000000
DISTRICT OFFICE	144.94	5/7/2026	RETIREE BENEFITS	01.0-90909.0-00000-00000-9530-00000000000
DISTRICT OFFICE	144.94	5/7/2026	RETIREE BENEFITS	01.0-90909.0-00000-00000-9530-00000000000
DISTRICT OFFICE	132.34	5/7/2026	RETIREE BENEFITS	01.0-90909.0-00000-00000-9530-00000000000
DISTRICT OFFICE	144.94	5/7/2026	RETIREE BENEFITS	01.0-90909.0-00000-00000-9530-00000000000
DISTRICT OFFICE	59.61	5/7/2026	RETIREE BENEFITS	01.0-90909.0-00000-00000-9530-00000000000
DISTRICT OFFICE	58.61	5/7/2026	RETIREE BENEFITS	01.0-90909.0-00000-00000-9530-00000000000
DISTRICT OFFICE	144.94	5/7/2026	RETIREE BENEFITS	01.0-90909.0-00000-00000-9530-00000000000
DISTRICT OFFICE	69.43	5/7/2026	RETIREE BENEFITS	01.0-90909.0-00000-00000-9530-00000000000
DISTRICT OFFICE	31.64	5/7/2026	RETIREE BENEFITS	01.0-90909.0-00000-00000-9530-00000000000
DISTRICT OFFICE	144.94	5/7/2026	RETIREE BENEFITS	01.0-90909.0-00000-00000-9530-00000000000
DISTRICT OFFICE	57.87	5/7/2026	RETIREE BENEFITS	01.0-90909.0-00000-00000-9530-00000000000
DISTRICT OFFICE	58.61	5/7/2026	RETIREE BENEFITS	01.0-90909.0-00000-00000-9530-00000000000
DISTRICT OFFICE	69.43	5/7/2026	RETIREE BENEFITS	01.0-90909.0-00000-00000-9530-00000000000
DISTRICT OFFICE	121.52	5/7/2026	RETIREE BENEFITS	01.0-90909.0-00000-00000-9530-00000000000
DISTRICT OFFICE	69.43	5/7/2026	RETIREE BENEFITS	01.0-90909.0-00000-00000-9530-00000000000
DISTRICT OFFICE	69.43	5/7/2026	RETIREE BENEFITS	01.0-90909.0-00000-00000-9530-00000000000
DISTRICT OFFICE	69.43	5/7/2026	RETIREE BENEFITS	01.0-90909.0-00000-00000-9530-00000000000
DISTRICT OFFICE	121.52	5/7/2026	RETIREE BENEFITS	01.0-90909.0-00000-00000-9530-00000000000
DISTRICT OFFICE	138.86	5/7/2026	RETIREE BENEFITS	01.0-90909.0-00000-00000-9530-00000000000
DISTRICT OFFICE	23.42	5/7/2026	RETIREE BENEFITS	01.0-90909.0-00000-00000-9530-00000000000
DISTRICT OFFICE	144.94	5/7/2026	RETIREE BENEFITS	01.0-90909.0-00000-00000-9530-00000000000
DISTRICT OFFICE	144.94	5/7/2026	RETIREE BENEFITS	01.0-90909.0-00000-00000-9530-00000000000
DISTRICT OFFICE	289.88	5/7/2026	RETIREE BENEFITS	01.0-90909.0-00000-00000-9530-00000000000
DISTRICT OFFICE	69.43	5/7/2026	RETIREE BENEFITS	01.0-90909.0-00000-00000-9530-00000000000
DISTRICT OFFICE	208.29	5/7/2026	RETIREE BENEFITS	01.0-90909.0-00000-00000-9530-00000000000
DISTRICT OFFICE	10.82	5/7/2026	RETIREE BENEFITS	01.0-90909.0-00000-00000-9530-00000000000
DISTRICT OFFICE	58.61	5/7/2026	RETIREE BENEFITS	01.0-90909.0-00000-00000-9530-00000000000
DISTRICT OFFICE	144.94	5/7/2026	RETIREE BENEFITS	01.0-90909.0-00000-00000-9530-00000000000
DISTRICT OFFICE	69.43	5/7/2026	RETIREE BENEFITS	01.0-90909.0-00000-00000-9530-00000000000
DISTRICT OFFICE	144.94	5/7/2026	RETIREE BENEFITS	01.0-90909.0-00000-00000-9530-00000000000
DISTRICT OFFICE	144.94	5/7/2026	RETIREE BENEFITS	01.0-90909.0-00000-00000-9530-00000000000
DISTRICT OFFICE	144.94	5/7/2026	RETIREE BENEFITS	01.0-90909.0-00000-00000-9530-00000000000
DISTRICT OFFICE	144.94	5/7/2026	RETIREE BENEFITS	01.0-90909.0-00000-00000-9530-00000000000
DISTRICT OFFICE	69.43	5/7/2026	RETIREE BENEFITS	01.0-90909.0-00000-00000-9530-00000000000
DISTRICT OFFICE	58.61	5/7/2026	RETIREE BENEFITS	01.0-90909.0-00000-00000-9530-00000000000
DISTRICT OFFICE	202.82	5/7/2026	RETIREE BENEFITS	01.0-90909.0-00000-00000-9530-00000000000
DISTRICT OFFICE	69.43	5/7/2026	RETIREE BENEFITS	01.0-90909.0-00000-00000-9530-00000000000
DISTRICT OFFICE	277.72	5/7/2026	RETIREE BENEFITS	01.0-90909.0-00000-00000-9530-00000000000
DISTRICT OFFICE	144.94	5/7/2026	RETIREE BENEFITS	01.0-90909.0-00000-00000-9530-00000000000
DISTRICT OFFICE	69.43	5/7/2026	RETIREE BENEFITS	01.0-90909.0-00000-00000-9530-00000000000

LOCATION	AMOUNT	DATE REC	DESCRIPTION	REV STRING
DISTRICT OFFICE	144.94	5/7/2026	RETIREE BENEFITS	01.0-90909.0-00000-00000-9530-00000000000
DISTRICT OFFICE	69.43	5/7/2026	RETIREE BENEFITS	01.0-90909.0-00000-00000-9530-00000000000
DISTRICT OFFICE	289.88	5/7/2026	RETIREE BENEFITS	01.0-90909.0-00000-00000-9530-00000000000
DISTRICT OFFICE	58.61	5/7/2026	RETIREE BENEFITS	01.0-90909.0-00000-00000-9530-00000000000
DISTRICT OFFICE	144.94	5/7/2026	RETIREE BENEFITS	01.0-90909.0-00000-00000-9530-00000000000
DISTRICT OFFICE	57.87	5/7/2026	RETIREE BENEFITS	01.0-90909.0-00000-00000-9530-00000000000
DISTRICT OFFICE	69.43	5/7/2026	RETIREE BENEFITS	01.0-90909.0-00000-00000-9530-00000000000
DISTRICT OFFICE	69.43	5/7/2026	RETIREE BENEFITS	01.0-90909.0-00000-00000-9530-00000000000
DISTRICT OFFICE	144.94	5/7/2026	RETIREE BENEFITS	01.0-90909.0-00000-00000-9530-00000000000
DISTRICT OFFICE	69.43	5/7/2026	RETIREE BENEFITS	01.0-90909.0-00000-00000-9530-00000000000
DISTRICT OFFICE	69.43	5/7/2026	RETIREE BENEFITS	01.0-90909.0-00000-00000-9530-00000000000
DISTRICT OFFICE	58.61	5/7/2026	RETIREE BENEFITS	01.0-90909.0-00000-00000-9530-00000000000
DISTRICT OFFICE	69.43	5/7/2026	RETIREE BENEFITS	01.0-90909.0-00000-00000-9530-00000000000
DISTRICT OFFICE	121.52	5/7/2026	RETIREE BENEFITS	01.0-90909.0-00000-00000-9530-00000000000
DISTRICT OFFICE	58.61	5/7/2026	RETIREE BENEFITS	01.0-90909.0-00000-00000-9530-00000000000
DISTRICT OFFICE	144.94	5/7/2026	RETIREE BENEFITS	01.0-90909.0-00000-00000-9530-00000000000
DISTRICT OFFICE	69.43	5/7/2026	RETIREE BENEFITS	01.0-90909.0-00000-00000-9530-00000000000
DISTRICT OFFICE	69.43	5/7/2026	RETIREE BENEFITS	01.0-90909.0-00000-00000-9530-00000000000
DISTRICT OFFICE	132.34	5/7/2026	RETIREE BENEFITS	01.0-90909.0-00000-00000-9530-00000000000
DISTRICT OFFICE	144.94	5/7/2026	RETIREE BENEFITS	01.0-90909.0-00000-00000-9530-00000000000
DISTRICT OFFICE	58.61	5/7/2026	RETIREE BENEFITS	01.0-90909.0-00000-00000-9530-00000000000
DISTRICT OFFICE	69.43	5/7/2026	RETIREE BENEFITS	01.0-90909.0-00000-00000-9530-00000000000
DISTRICT OFFICE	134.12	5/7/2026	RETIREE BENEFITS	01.0-90909.0-00000-00000-9530-00000000000
DISTRICT OFFICE	69.43	5/7/2026	RETIREE BENEFITS	01.0-90909.0-00000-00000-9530-00000000000
DISTRICT OFFICE	410.15	5/7/2026	RETIREE BENEFITS	01.0-90909.0-00000-00000-9530-00000000000
DISTRICT OFFICE	289.88	5/7/2026	RETIREE BENEFITS	01.0-90909.0-00000-00000-9530-00000000000
DISTRICT OFFICE	58.61	5/7/2026	RETIREE BENEFITS	01.0-90909.0-00000-00000-9530-00000000000
DISTRICT OFFICE	45.27	5/7/2026	RETIREE BENEFITS	01.0-90909.0-00000-00000-9530-00000000000
DISTRICT OFFICE	58.61	5/7/2026	RETIREE BENEFITS	01.0-90909.0-00000-00000-9530-00000000000
DISTRICT OFFICE	69.43	5/7/2026	RETIREE BENEFITS	01.0-90909.0-00000-00000-9530-00000000000
DISTRICT OFFICE	69.43	5/7/2026	RETIREE BENEFITS	01.0-90909.0-00000-00000-9530-00000000000
DISTRICT OFFICE	128.04	5/7/2026	RETIREE BENEFITS	01.0-90909.0-00000-00000-9530-00000000000
DISTRICT OFFICE	69.43	5/7/2026	RETIREE BENEFITS	01.0-90909.0-00000-00000-9530-00000000000
DISTRICT OFFICE	69.43	5/7/2026	RETIREE BENEFITS	01.0-90909.0-00000-00000-9530-00000000000
DISTRICT OFFICE	213.64	5/7/2026	RETIREE BENEFITS	01.0-90909.0-00000-00000-9530-00000000000
DISTRICT OFFICE	144.94	5/7/2026	RETIREE BENEFITS	01.0-90909.0-00000-00000-9530-00000000000
DISTRICT OFFICE	134.12	5/7/2026	RETIREE BENEFITS	01.0-90909.0-00000-00000-9530-00000000000
DISTRICT OFFICE	47.05	5/7/2026	RETIREE BENEFITS	01.0-90909.0-00000-00000-9530-00000000000
DISTRICT OFFICE	144.94	5/7/2026	RETIREE BENEFITS	01.0-90909.0-00000-00000-9530-00000000000
DISTRICT OFFICE	416.58	5/7/2026	RETIREE BENEFITS	01.0-90909.0-00000-00000-9530-00000000000
DISTRICT OFFICE	46.84	5/7/2026	RETIREE BENEFITS	01.0-90909.0-00000-00000-9530-00000000000
DISTRICT OFFICE	69.43	5/7/2026	RETIREE BENEFITS	01.0-90909.0-00000-00000-9530-00000000000
DISTRICT OFFICE	144.94	5/7/2026	RETIREE BENEFITS	01.0-90909.0-00000-00000-9530-00000000000
DISTRICT OFFICE	69.43	5/7/2026	RETIREE BENEFITS	01.0-90909.0-00000-00000-9530-00000000000
DISTRICT OFFICE	144.94	5/7/2026	RETIREE BENEFITS	01.0-90909.0-00000-00000-9530-00000000000
DISTRICT OFFICE	117.22	5/7/2026	RETIREE BENEFITS	01.0-90909.0-00000-00000-9530-00000000000
DISTRICT OFFICE	58.61	5/7/2026	RETIREE BENEFITS	01.0-90909.0-00000-00000-9530-00000000000
DISTRICT OFFICE	144.94	5/7/2026	RETIREE BENEFITS	01.0-90909.0-00000-00000-9530-00000000000
DISTRICT OFFICE	144.94	5/7/2026	RETIREE BENEFITS	01.0-90909.0-00000-00000-9530-00000000000
DISTRICT OFFICE	58.61	5/7/2026	RETIREE BENEFITS	01.0-90909.0-00000-00000-9530-00000000000
DISTRICT OFFICE	144.94	5/7/2026	RETIREE BENEFITS	01.0-90909.0-00000-00000-9530-00000000000
DISTRICT OFFICE	69.43	5/7/2026	RETIREE BENEFITS	01.0-90909.0-00000-00000-9530-00000000000
DISTRICT OFFICE	69.43	5/7/2026	RETIREE BENEFITS	01.0-90909.0-00000-00000-9530-00000000000
DISTRICT OFFICE	144.94	5/7/2026	RETIREE BENEFITS	01.0-90909.0-00000-00000-9530-00000000000

LOCATION	AMOUNT	DATE REC	DESCRIPTION	REV STRING
DISTRICT OFFICE	144.94	5/7/2026	RETIREE BENEFITS	01.0-90909.0-00000-00000-9530-00000000000
DISTRICT OFFICE	175.83	5/7/2026	RETIREE BENEFITS	01.0-90909.0-00000-00000-9530-00000000000
DISTRICT OFFICE	69.43	5/7/2026	RETIREE BENEFITS	01.0-90909.0-00000-00000-9530-00000000000
DISTRICT OFFICE	134.12	5/7/2026	RETIREE BENEFITS	01.0-90909.0-00000-00000-9530-00000000000
DISTRICT OFFICE	58.61	5/7/2026	RETIREE BENEFITS	01.0-90909.0-00000-00000-9530-00000000000
DISTRICT OFFICE	144.94	5/7/2026	RETIREE BENEFITS	01.0-90909.0-00000-00000-9530-00000000000
DISTRICT OFFICE	69.43	5/7/2026	RETIREE BENEFITS	01.0-90909.0-00000-00000-9530-00000000000
DISTRICT OFFICE	134.12	5/7/2026	RETIREE BENEFITS	01.0-90909.0-00000-00000-9530-00000000000
DISTRICT OFFICE	117.22	5/7/2026	RETIREE BENEFITS	01.0-90909.0-00000-00000-9530-00000000000
DISTRICT OFFICE	57.87	5/7/2026	RETIREE BENEFITS	01.0-90909.0-00000-00000-9530-00000000000
DISTRICT OFFICE	63.31	5/7/2026	RETIREE BENEFITS	01.0-90909.0-00000-00000-9530-00000000000
DISTRICT OFFICE	69.43	5/7/2026	RETIREE BENEFITS	01.0-90909.0-00000-00000-9530-00000000000
DISTRICT OFFICE	144.94	5/7/2026	RETIREE BENEFITS	01.0-90909.0-00000-00000-9530-00000000000
DISTRICT OFFICE	121.52	5/7/2026	RETIREE BENEFITS	01.0-90909.0-00000-00000-9530-00000000000
DISTRICT OFFICE	31.64	5/7/2026	RETIREE BENEFITS	01.0-90909.0-00000-00000-9530-00000000000
DISTRICT OFFICE	144.94	5/7/2026	RETIREE BENEFITS	01.0-90909.0-00000-00000-9530-00000000000
DISTRICT OFFICE	132.34	5/7/2026	RETIREE BENEFITS	01.0-90909.0-00000-00000-9530-00000000000
DISTRICT OFFICE	69.43	5/7/2026	RETIREE BENEFITS	01.0-90909.0-00000-00000-9530-00000000000
DISTRICT OFFICE	58.61	5/7/2026	RETIREE BENEFITS	01.0-90909.0-00000-00000-9530-00000000000
DISTRICT OFFICE	69.43	5/7/2026	RETIREE BENEFITS	01.0-90909.0-00000-00000-9530-00000000000
DISTRICT OFFICE	45.27	5/7/2026	RETIREE BENEFITS	01.0-90909.0-00000-00000-9530-00000000000
DISTRICT OFFICE	58.61	5/7/2026	RETIREE BENEFITS	01.0-90909.0-00000-00000-9530-00000000000
DISTRICT OFFICE	58.61	5/7/2026	RETIREE BENEFITS	01.0-90909.0-00000-00000-9530-00000000000
DISTRICT OFFICE	69.43	5/7/2026	RETIREE BENEFITS	01.0-90909.0-00000-00000-9530-00000000000
DISTRICT OFFICE	58.61	5/7/2026	RETIREE BENEFITS	01.0-90909.0-00000-00000-9530-00000000000
DISTRICT OFFICE	144.94	5/29/2026	RETIREE BENEFITS	01.0-90909.0-00000-00000-9530-00000000000
DISTRICT OFFICE	69.43	5/29/2026	RETIREE BENEFITS	01.0-90909.0-00000-00000-9530-00000000000
DISTRICT OFFICE	138.86	5/29/2026	RETIREE BENEFITS	01.0-90909.0-00000-00000-9530-00000000000
DISTRICT OFFICE	175.83	5/29/2026	RETIREE BENEFITS	01.0-90909.0-00000-00000-9530-00000000000
DISTRICT OFFICE	529.36	5/29/2026	RETIREE BENEFITS	01.0-90909.0-00000-00000-9530-00000000000
DISTRICT OFFICE	58.61	5/29/2026	RETIREE BENEFITS	01.0-90909.0-00000-00000-9530-00000000000
DISTRICT OFFICE	69.43	5/29/2026	RETIREE BENEFITS	01.0-90909.0-00000-00000-9530-00000000000
DISTRICT OFFICE	69.43	5/29/2026	RETIREE BENEFITS	01.0-90909.0-00000-00000-9530-00000000000
DISTRICT OFFICE	58.61	5/29/2026	RETIREE BENEFITS	01.0-90909.0-00000-00000-9530-00000000000
DISTRICT OFFICE	23.42	5/29/2026	RETIREE BENEFITS	01.0-90909.0-00000-00000-9530-00000000000
DISTRICT OFFICE	58.61	5/29/2026	RETIREE BENEFITS	01.0-90909.0-00000-00000-9530-00000000000
DISTRICT OFFICE	62.96	5/29/2026	RETIREE BENEFITS	01.0-90909.0-00000-00000-9530-00000000000
DISTRICT OFFICE	138.86	5/29/2026	RETIREE BENEFITS	01.0-90909.0-00000-00000-9530-00000000000
DISTRICT OFFICE	144.94	5/29/2026	RETIREE BENEFITS	01.0-90909.0-00000-00000-9530-00000000000
DISTRICT OFFICE	69.43	5/29/2026	RETIREE BENEFITS	01.0-90909.0-00000-00000-9530-00000000000
DISTRICT OFFICE	144.94	5/29/2026	RETIREE BENEFITS	01.0-90909.0-00000-00000-9530-00000000000
DISTRICT OFFICE	175.73	5/29/2026	RETIREE BENEFITS	01.0-90909.0-00000-00000-9530-00000000000
DISTRICT OFFICE	69.43	5/29/2026	RETIREE BENEFITS	01.0-90909.0-00000-00000-9530-00000000000
DISTRICT OFFICE	144.94	5/29/2026	RETIREE BENEFITS	01.0-90909.0-00000-00000-9530-00000000000
DISTRICT OFFICE	144.94	5/29/2026	RETIREE BENEFITS	01.0-90909.0-00000-00000-9530-00000000000
DISTRICT OFFICE	144.94	5/29/2026	RETIREE BENEFITS	01.0-90909.0-00000-00000-9530-00000000000
DISTRICT OFFICE	213.64	5/29/2026	RETIREE BENEFITS	01.0-90909.0-00000-00000-9530-00000000000
DISTRICT OFFICE	144.94	5/29/2026	RETIREE BENEFITS	01.0-90909.0-00000-00000-9530-00000000000
DISTRICT OFFICE	104.10	5/29/2026	RETIREE BENEFITS	01.0-90909.0-00000-00000-9530-00000000000
DISTRICT OFFICE	20.82	5/29/2026	RETIREE BENEFITS	01.0-90909.0-00000-00000-9530-00000000000
DISTRICT OFFICE	58.61	5/29/2026	RETIREE BENEFITS	01.0-90909.0-00000-00000-9530-00000000000
DISTRICT OFFICE	144.94	5/29/2026	RETIREE BENEFITS	01.0-90909.0-00000-00000-9530-00000000000
DISTRICT OFFICE	82.03	5/29/2026	RETIREE BENEFITS	01.0-90909.0-00000-00000-9530-00000000000
DISTRICT OFFICE	58.61	5/29/2026	RETIREE BENEFITS	01.0-90909.0-00000-00000-9530-00000000000

LOCATION	AMOUNT	DATE REC	DESCRIPTION	REV STRING
DISTRICT OFFICE	69.43	5/29/2026	RETIREE BENEFITS	01.0-90909.0-00000-00000-9530-00000000000
DISTRICT OFFICE	144.94	5/29/2026	RETIREE BENEFITS	01.0-90909.0-00000-00000-9530-00000000000
DISTRICT OFFICE	132.34	5/29/2026	RETIREE BENEFITS	01.0-90909.0-00000-00000-9530-00000000000
DISTRICT OFFICE	208.29	5/29/2026	RETIREE BENEFITS	01.0-90909.0-00000-00000-9530-00000000000
DISTRICT OFFICE	69.43	5/29/2026	RETIREE BENEFITS	01.0-90909.0-00000-00000-9530-00000000000
DISTRICT OFFICE	144.94	5/29/2026	RETIREE BENEFITS	01.0-90909.0-00000-00000-9530-00000000000
DISTRICT OFFICE	144.94	5/29/2026	RETIREE BENEFITS	01.0-90909.0-00000-00000-9530-00000000000
DISTRICT OFFICE	69.43	5/29/2026	RETIREE BENEFITS	01.0-90909.0-00000-00000-9530-00000000000
DISTRICT OFFICE	134.12	5/29/2026	RETIREE BENEFITS	01.0-90909.0-00000-00000-9530-00000000000
DISTRICT OFFICE	213.64	5/29/2026	RETIREE BENEFITS	01.0-90909.0-00000-00000-9530-00000000000
DISTRICT OFFICE	31.64	5/29/2026	RETIREE BENEFITS	01.0-90909.0-00000-00000-9530-00000000000
DISTRICT OFFICE	69.43	5/29/2026	RETIREE BENEFITS	01.0-90909.0-00000-00000-9530-00000000000
DISTRICT OFFICE	58.61	5/29/2026	RETIREE BENEFITS	01.0-90909.0-00000-00000-9530-00000000000
DISTRICT OFFICE	132.34	5/29/2026	RETIREE BENEFITS	01.0-90909.0-00000-00000-9530-00000000000
DISTRICT OFFICE	416.58	5/29/2026	RETIREE BENEFITS	01.0-90909.0-00000-00000-9530-00000000000
DISTRICT OFFICE	69.43	5/29/2026	RETIREE BENEFITS	01.0-90909.0-00000-00000-9530-00000000000
DISTRICT OFFICE	69.43	5/29/2026	RETIREE BENEFITS	01.0-90909.0-00000-00000-9530-00000000000
DISTRICT OFFICE	45.27	5/29/2026	RETIREE BENEFITS	01.0-90909.0-00000-00000-9530-00000000000
DISTRICT OFFICE	82.03	5/29/2026	RETIREE BENEFITS	01.0-90909.0-00000-00000-9530-00000000000
DISTRICT OFFICE	117.22	5/29/2026	RETIREE BENEFITS	01.0-90909.0-00000-00000-9530-00000000000
DISTRICT OFFICE	1,419.72	5/29/2026	RETIREE BENEFITS	01.0-90909.0-00000-00000-9530-00000000000
Reimbursements	21,722.86			
FACILITIES SERVICES	7,297.50	5/7/2026	Use of Facilities Burbank High multiple inv's	01.0-90708.0-00000-00000-8650-75200000000
FACILITIES SERVICES	2,095.00	5/7/2026	Use Of Facilities Inv 25-0213	01.0-90708.0-00000-00000-8650-75200000000
FACILITIES SERVICES	210.00	5/7/2026	Use Of Facilities Inv 25-0361	01.0-90708.0-00000-00000-8650-75200000000
FACILITIES SERVICES	280.00	5/7/2026	Use Of Facilities Inv 25-0430	01.0-90708.0-00000-00000-8650-75200000000
FACILITIES SERVICES	262.50	5/7/2026	Use Of Facilities Inv 25-0443	01.0-90708.0-00000-00000-8650-75200000000
FACILITIES SERVICES	157.50	5/7/2026	Use Of Facilities Inv 25-0451	01.0-90708.0-00000-00000-8650-75200000000
FACILITIES SERVICES	280.00	5/7/2026	Use Of Facilities Inv 25-0483	01.0-90708.0-00000-00000-8650-75200000000
FACILITIES SERVICES	175.00	5/7/2026	Use Of Facilities Inv 25-0509	01.0-90708.0-00000-00000-8650-75200000000
FACILITIES SERVICES	280.00	5/7/2026	Use Of Facilities Inv 25-0518	01.0-90708.0-00000-00000-8650-75200000000
FACILITIES SERVICES	105.00	5/7/2026	Use Of Facilities Inv 25-0579	01.0-90708.0-00000-00000-8650-75200000000
FACILITIES SERVICES	105.00	5/7/2026	Use Of Facilities Inv 25-0588	01.0-90708.0-00000-00000-8650-75200000000
FACILITIES SERVICES	735.00	5/7/2026	Use Of Facilities Inv 25-0686	01.0-90708.0-00000-00000-8650-75200000000
FACILITIES SERVICES	595.00	5/7/2026	Use Of Facilities Inv 25-0694 & 25-0688	01.0-90708.0-00000-00000-8650-75200000000
FACILITIES SERVICES	105.00	5/7/2026	Use Of Facilities Inv 25-0714	01.0-90708.0-00000-00000-8650-75200000000
FACILITIES SERVICES	3,354.00	5/7/2026	Use Of Facilities Inv 25-0787	01.0-90708.0-00000-00000-8650-75200000000
FACILITIES SERVICES	525.00	5/7/2026	Use Of Facilities Inv 25-0789	01.0-90708.0-00000-00000-8650-75200000000
FACILITIES SERVICES	315.00	5/7/2026	Use Of Facilities Inv 25-0797	01.0-90708.0-00000-00000-8650-75200000000
FACILITIES SERVICES	720.00	5/7/2026	Use Of Facilities Inv 25-0806	01.0-90708.0-00000-00000-8650-75200000000
FACILITIES SERVICES	1,617.50	5/7/2026	Use Of Facilities Inv 25-0807	01.0-90708.0-00000-00000-8650-75200000000
FACILITIES SERVICES	614.00	5/7/2026	Use Of Facilities Inv 25-0833	01.0-90708.0-00000-00000-8650-75200000000
FACILITIES SERVICES	672.50	5/7/2026	Use Of Facilities Inv 25-0839	01.0-90708.0-00000-00000-8650-75200000000
FACILITIES SERVICES	1,491.00	5/7/2026	Use Of Facilities Inv 25-0899 & 25-0898	01.0-90708.0-00000-00000-8650-75200000000
FACILITIES SERVICES	1,580.00	5/7/2026	Use Of Facilities Inv 25-0932 & 25-0634	01.0-90708.0-00000-00000-8650-75200000000
FACILITIES SERVICES	250.00	5/7/2026	Use Of Facilities Inv 25-0934	01.0-90708.0-00000-00000-8650-75200000000
FACILITIES SERVICES	2,684.50	5/7/2026	Use Of Facilities Inv 25-0938	01.0-90708.0-00000-00000-8650-75200000000
Use of Facilitiies	26,506.00			
LUTHER	45.50	5/15/2026	AUG22025PRINTSHOP-042	01.0-90904.0-00000-00000-8699-32000000000
LUTHER	218.82	5/29/2026	BILLABLE INV LB2526003	01.0-90904.0-00000-00000-8699-32000000000

LOCATION	AMOUNT	DATE REC	DESCRIPTION	REV STRING
LUTHER	246.61	5/29/2026	BILLABLE INV LB2526004	01.0-90904.0-00000-00000-8699-32000000000
LUTHER	258.94	5/29/2026	BILLABLE INV LB2526005	01.0-90904.0-00000-00000-8699-32000000000
HUERTA	581.13	5/7/2026	Billables-DH25260019	01.0-90904.0-00000-00000-8699-32100000000
BURROUGHS	364.72	5/7/2026	Billables-JB25260258	01.0-90904.0-00000-00000-8699-43200000000
LUTHER	750.00	5/7/2026	Billables-LBPO2526006	01.0-90904.0-00000-00000-8699-32000000000
Burbank Council PTA	24.25	5/20/2026	Jan2025PrintShop-015	01.0-90904.0-00000-00000-8699-74000000000
EMERSON	187.10	5/15/2026	MAR2026PRINTSHOP-009	01.0-90904.0-00000-00000-8699-20300000000
BURROUGHS	39.00	5/15/2026	MAR2026PRINTSHOP-012	01.0-90904.0-00000-00000-8699-43200000000
BURROUGHS	65.00	5/15/2026	MAR2026PRINTSHOP-013	01.0-90904.0-00000-00000-8699-43200000000
BURROUGHS	363.45	5/15/2026	MAR2026PRINTSHOP-015	01.0-90904.0-00000-00000-8699-43200000000
HUERTA	25.75	5/29/2026	Mar2026PrintShop-018	01.0-90904.0-00000-00000-8699-32100000000
LUTHER	19.63	5/15/2026	MAR2026PRINTSHOP-019	01.0-90904.0-00000-00000-8699-32000000000
MILLER	28.77	5/29/2026	Mar2026PrintShop-020	01.0-90904.0-00000-00000-8699-21000000000
ROOSEVELT	1,865.52	5/15/2026	Mar2026PrintShop-021	01.0-90904.0-00000-00000-8699-21400000000
EMERSON	39.05	5/15/2026	MAR2026PRINTSHOP-10	01.0-90904.0-00000-00000-8699-20300000000
LUTHER	35.19	5/15/2026	OCT2025PRINTSHOP-042	01.0-90904.0-00000-00000-8699-32000000000
Billables	5,158.43			
FACILITIES SERVICES	10,267.62	5/7/2026	DEVELOPER FEES	25.0-90328.0-00000-00000-8681-00000000000
FACILITIES SERVICES	16,140.74	5/7/2026	DEVELOPER FEES	25.0-90328.0-00000-00000-8681-00000000000
FACILITIES SERVICES	7,408.61	5/7/2026	DEVELOPER FEES	25.0-90328.0-00000-00000-8681-00000000000
FACILITIES SERVICES	5,159.66	5/15/2026	DEVELOPER FEES	25.0-90328.0-00000-00000-8681-00000000000
FACILITIES SERVICES	5,144.15	5/15/2026	DEVELOPER FEES	25.0-90328.0-00000-00000-8681-00000000000
FACILITIES SERVICES	2,988.26	5/15/2026	DEVELOPER FEES	25.0-90328.0-00000-00000-8681-00000000000
FACILITIES SERVICES	15,498.62	5/15/2026	DEVELOPER FEES	25.0-90328.0-00000-00000-8681-00000000000
FACILITIES SERVICES	10,955.23	5/15/2026	DEVELOPER FEES	25.0-90328.0-00000-00000-8681-00000000000
FACILITIES SERVICES	4,306.61	5/20/2026	DEVELOPER FEES	25.0-90328.0-00000-00000-8681-00000000000
FACILITIES SERVICES	5,562.92	5/20/2026	DEVELOPER FEES	25.0-90328.0-00000-00000-8681-00000000000
FACILITIES SERVICES	4,136.00	5/20/2026	DEVELOPER FEES	25.0-90328.0-00000-00000-8681-00000000000
FACILITIES SERVICES	5,170.00	5/29/2026	DEVELOPER FEES	25.0-90328.0-00000-00000-8681-00000000000
FACILITIES SERVICES	5,170.00	5/29/2026	DEVELOPER FEES	25.0-90328.0-00000-00000-8681-00000000000
FACILITIES SERVICES	5,097.62	5/29/2026	DEVELOPER FEES	25.0-90328.0-00000-00000-8681-00000000000
FACILITIES SERVICES	4,249.74	5/29/2026	DEVELOPER FEES	25.0-90328.0-00000-00000-8681-00000000000
FACILITIES SERVICES	4,621.98	5/29/2026	DEVELOPER FEES	25.0-90328.0-00000-00000-8681-00000000000
Developer Fees	111,877.76			
DISTRICT OFFICE	271.11	5/20/2026	ACSA Refund	76.0-00000.0-00000-00000-9517-00000003000
FACILITIES SERVICES	35.00	5/20/2026	CINTAS SYS REF FOR CM 9354758062	01.0-00100.0-00000-00000-8699-75200000000
FACILITIES SERVICES	222.38	5/7/2026	Lowe's Omnia 2025 Member Rebate	01.0-81500.0-00000-81100-4310-75200000000
DISTRICT OFFICE	53.82	5/15/2026	Kellie Devries AF DIB 4/26	76.0-00000.0-00000-00000-9562-00000000000
DISTRICT OFFICE	1.50	5/15/2026	Kellie Devries Mut Oma Life 4/26	01.0-00000.0-00000-00000-9530-00000000000
DISTRICT OFFICE	255.32	5/15/2026	Kellie Devries Pers Gold 4/26	76.0-00000.0-00000-00000-9518-00000000000
Refunds	$ 839.13			
FACILITIES SERVICES	100.00	5/29/2026	Car washes for Damages Deposit	01.0-81500.0-00000-81000-4310-75200000000
FACILITIES SERVICES	50.00	5/29/2026	Car washes for Damages Deposit	01.0-81500.0-00000-81000-4310-75200000000
DISTRICT OFFICE	15.00	5/20/2026	SUBPOENA FEE	01.0-00000.0-00000-72000-4310-75500000000

LOCATION	AMOUNT	DATE REC	DESCRIPTION	REV STRING
Misc Receipts	165.00			
EDISON	20.00	5/15/2026	3RD GRADE FIELD TRIP	01.0-90201.0-00000-00000-8699-20200000000
EDISON	15.00	5/15/2026	3RD GRADE FIELD TRIP	01.0-90201.0-00000-00000-8699-20200000000
EDISON	15.00	5/15/2026	3RD GRADE FIELD TRIP	01.0-90201.0-00000-00000-8699-20200000000
EDISON	20.00	5/15/2026	3RD GRADE FIELD TRIP	01.0-90201.0-00000-00000-8699-20200000000
EDISON	20.00	5/15/2026	3RD GRADE FIELD TRIP	01.0-90201.0-00000-00000-8699-20200000000
EDISON	15.00	5/15/2026	3RD GRADE FIELD TRIP	01.0-90201.0-00000-00000-8699-20200000000
EDISON	15.00	5/15/2026	3RD GRADE FIELD TRIP	01.0-90201.0-00000-00000-8699-20200000000
EDISON	15.00	5/15/2026	3RD GRADE FIELD TRIP	01.0-90201.0-00000-00000-8699-20200000000
EDISON	15.00	5/15/2026	3RD GRADE FIELD TRIP	01.0-90201.0-00000-00000-8699-20200000000
MCKINLEY	200.00	5/29/2026	American Charities Donation	01.0-90201.0-00000-00000-8699-20900000000
DISTRICT OFFICE	1,817.00	5/15/2026	American Online Foundation Donation	01.0-00000.0-00000-00000-8699-00000000000
BURROUGHS	2,340.32	5/15/2026	BAEF Pasedena Showcase House Grant	01.0-90704.0-00000-00000-8699-43200000000
BURBANK HIGH	2,457.39	5/15/2026	BAEF Pasedena Showcase House Grant	01.0-90704.0-00000-00000-8699-43100000000
HUERTA	2,567.28	5/15/2026	BAEF Pasedena Showcase House Grant	01.0-90704.0-00000-00000-8699-32100000000
MUIR	2,283.79	5/15/2026	BAEF Pasedena Showcase House Grant	01.0-90704.0-00000-00000-8699-32200000000
LUTHER	2,651.22	5/15/2026	BAEF Pasedena Showcase House Grant	01.0-90704.0-00000-00000-8699-32000000000
DISTRICT OFFICE	341,533.00	5/29/2026	child development INV pr-20251201-64337	12.0-61050.0-00000-00000-8590-00000000000
FOOD SERVICES	293,070.60	5/7/2026	CN 2560494 SNP 03/26	13.0-53108.0-00000-00000-9290-00000000000
FOOD SERVICES	500,500.56	5/7/2026	CN 2560496 SNP 03/26	13.0-53108.0-00000-00000-9290-00000000000
STEVENSON	462.72	5/15/2026	Cornerstone Photography Spring Pictures	01.0-90201.0-00000-00000-8699-21500000000
BURBANK HIGH	2,760.00	5/7/2026	DEC 2025 FILM LA AM STOCK	01.0-90711.0-00000-00000-8699-43100000000
HUERTA	346.14	5/29/2026	Donation to Huerta	01.0-90201.0-00000-00000-8699-32100000000
HUERTA	230.76	5/29/2026	Donation to Huerta	01.0-90201.0-00000-00000-8699-32100000000
HUERTA	230.76	5/29/2026	Donation to Huerta	01.0-90201.0-00000-00000-8699-32100000000
STEVENSON	6,285.00	5/15/2026	Enrich LA	01.0-90820.0-00000-00000-8699-21500000000
DISTRICT OFFICE	361.45	5/15/2026	EWASTE	01.0.00000.0-00000-00000-8699-00000000000
HUERTA	7,950.00	5/7/2026	FEB 2026 FILM LA 20TH TELEVISION	01.0-90711.0-00000-00000-8699-32100000000
MUIR	3,035.00	5/7/2026	FEB 2026 FILM LA FARM LEAGUE	01.0-90711.0-00000-00000-8699-32200000000
MCKINLEY	250.00	5/15/2026	FRC DEPOSITS	01.0-90870.0-00000-00000-8699-20900000000
MCKINLEY	100.00	5/15/2026	FRC DEPOSITS	01.0-90870.0-00000-00000-8699-20900000000
MCKINLEY	100.00	5/15/2026	FRC DEPOSITS	01.0-90870.0-00000-00000-8699-20900000000
MCKINLEY	100.00	5/29/2026	FUNDRAISER	01.0-90870.0-00000-00000-8699-20900000000
MCKINLEY	100.00	5/29/2026	FUNDRAISER	01.0-90870.0-00000-00000-8699-20900000000
MCKINLEY	100.00	5/29/2026	FUNDRAISER	01.0-90870.0-00000-00000-8699-20900000000
MCKINLEY	250.00	5/29/2026	FUNDRAISER	01.0-90870.0-00000-00000-8699-20900000000
MCKINLEY	100.00	5/29/2026	FUNDRAISER	01.0-90870.0-00000-00000-8699-20900000000
MCKINLEY	100.00	5/29/2026	FUNDRAISER	01.0-90870.0-00000-00000-8699-20900000000
EMERSON	150.00	5/29/2026	Gift-BANNER	01.0-90201.0-00000-00000-8699-20300000000
EMERSON	2,594.00	5/20/2026	GIFTS BMX ASSEMBLY	01.0-90820.0-00000-00000-8699-20300000000
HORACE MANN	1,807.20	5/7/2026	MAR 2026 FILM LA JH Artist	01.0-90711.0-00000-00000-8699-50800000000
BURROUGHS	11,920.00	5/7/2026	MAR 2026 FILM LA PUPPY LOVE	01.0-90711.0-00000-00000-8699-43200000000
MUIR	13,842.20	5/7/2026	MAR 2026 FILM LA SOME SUCH	01.0-90711.0-00000-00000-8699-32200000000
JEFFERSON	6,681.60	5/7/2026	MAR 2026 FILM LA SOME SUCH	01.0-90711.0-00000-00000-8699-20600000000
DISTRICT OFFICE	7,800.00	5/7/2026	May 2026 Parking Rent	01.0-90708.0-00000-00000-8650-78000000000
DISTRICT OFFICE	6,506.14	5/15/2026	MEDI-CAL	01.0-95640.0-00000-00000-8290-74400000000
DISTRICT OFFICE	3,204.51	5/15/2026	MEDI-CAL	01.0-95640.0-00000-00000-8290-77200000000
DISTRICT OFFICE	4,534.90	5/20/2026	MEDI-CAL	01.0-95640.0-00000-00000-8290-74400000000
DISTRICT OFFICE	2,233.61	5/20/2026	MEDI-CAL	01.0-95640.0-00000-00000-8290-77200000000
DISTRICT OFFICE	195,722.77	5/29/2026	MEDI-CAL	01.0-95640.0-00000-00000-8290-74400000000
DISTRICT OFFICE	96,400.76	5/29/2026	MEDI-CAL	01.0-95640.0-00000-00000-8290-77200000000
WASHINGTON	350.00	5/15/2026	OSS FIELD TRIP	01.0-90880.0-00000-00000-8699-21600000000

LOCATION	AMOUNT	DATE REC	DESCRIPTION	REV STRING
WASHINGTON	350.00	5/15/2026	OSS FIELD TRIP	01.0-90880.0-00000-00000-8699-21600000000
PROVIDENCIA	180.00	5/29/2026	OSS FIELD TRIP	01.0-90880.0-00000-00000-8699-21300000000
PROVIDENCIA	160.00	5/29/2026	OSS FIELD TRIP	01.0-90880.0-00000-00000-8699-21300000000
MONTEREY	30.60	5/29/2026	PARCHMENT GIFT LLC	01.0-90201.0-00000-00000-8699-53000000000
INSTRUCTIONAL	10.00	5/7/2026	Parents Donation Dual Immersion Summer Camp	01.0-90871.0-00000-00000-8699-74200000000
INSTRUCTIONAL	85.00	5/7/2026	Parents Donation Dual Immersion Summer Camp	01.0-90871.0-00000-00000-8699-74200000000
INSTRUCTIONAL	75.00	5/7/2026	Parents Donation Dual Immersion Summer Camp	01.0-90871.0-00000-00000-8699-74200000000
INSTRUCTIONAL	600.00	5/7/2026	Parents Donation Dual Immersion Summer Camp	01.0-90871.0-00000-00000-8699-74200000000
INSTRUCTIONAL	85.00	5/7/2026	Parents Donation Dual Immersion Summer Camp	01.0-90871.0-00000-00000-8699-74200000000
INSTRUCTIONAL	85.00	5/7/2026	Parents Donation Dual Immersion Summer Camp	01.0-90871.0-00000-00000-8699-74200000000
INSTRUCTIONAL	850.00	5/7/2026	Parents Donation Dual Immersion Summer Camp	01.0-90871.0-00000-00000-8699-74200000000
INSTRUCTIONAL	85.00	5/7/2026	Parents Donation Dual Immersion Summer Camp	01.0-90871.0-00000-00000-8699-74200000000
INSTRUCTIONAL	85.00	5/7/2026	Parents Donation Dual Immersion Summer Camp	01.0-90871.0-00000-00000-8699-74200000000
INSTRUCTIONAL	85.00	5/7/2026	Parents Donation Dual Immersion Summer Camp	01.0-90871.0-00000-00000-8699-74200000000
INSTRUCTIONAL	170.00	5/7/2026	Parents Donation Dual Immersion Summer Camp	01.0-90871.0-00000-00000-8699-74200000000
INSTRUCTIONAL	1,360.00	5/7/2026	Parents Donation Dual Immersion Summer Camp	01.0-90871.0-00000-00000-8699-74200000000
INSTRUCTIONAL	85.00	5/7/2026	Parents Donation Dual Immersion Summer Camp	01.0-90871.0-00000-00000-8699-74200000000
INSTRUCTIONAL	85.00	5/7/2026	Parents Donation Dual Immersion Summer Camp	01.0-90871.0-00000-00000-8699-74200000000
INSTRUCTIONAL	340.00	5/7/2026	Parents Donation Dual Immersion Summer Camp	01.0-90871.0-00000-00000-8699-74200000000
INSTRUCTIONAL	200.00	5/7/2026	Parents Donation Dual Immersion Summer Camp	01.0-90871.0-00000-00000-8699-74200000000
INSTRUCTIONAL	265.00	5/7/2026	Parents Donation Dual Immersion Summer Camp	01.0-90871.0-00000-00000-8699-74200000000
INSTRUCTIONAL	1,020.00	5/7/2026	Parents Donation Dual Immersion Summer Camp	01.0-90871.0-00000-00000-8699-74200000000
INSTRUCTIONAL	85.00	5/7/2026	Parents Donation Dual Immersion Summer Camp	01.0-90871.0-00000-00000-8699-74200000000
INSTRUCTIONAL	85.00	5/7/2026	Parents Donation Dual Immersion Summer Camp	01.0-90871.0-00000-00000-8699-74200000000
INSTRUCTIONAL	85.00	5/7/2026	Parents Donation Dual Immersion Summer Camp	01.0-90871.0-00000-00000-8699-74200000000
INSTRUCTIONAL	85.00	5/7/2026	Parents Donation Dual Immersion Summer Camp	01.0-90871.0-00000-00000-8699-74200000000
INSTRUCTIONAL	75.00	5/7/2026	Parents Donation Dual Immersion Summer Camp	01.0-90871.0-00000-00000-8699-74200000000
INSTRUCTIONAL	75.00	5/7/2026	Parents Donation Dual Immersion Summer Camp	01.0-90871.0-00000-00000-8699-74200000000
INSTRUCTIONAL	75.00	5/7/2026	Parents Donation Dual Immersion Summer Camp	01.0-90871.0-00000-00000-8699-74200000000
INSTRUCTIONAL	850.00	5/7/2026	Parents Donation Dual Immersion Summer Camp	01.0-90871.0-00000-00000-8699-74200000000
INSTRUCTIONAL	340.00	5/7/2026	Parents Donation Dual Immersion Summer Camp	01.0-90871.0-00000-00000-8699-74200000000
INSTRUCTIONAL	75.00	5/7/2026	Parents Donation Dual Immersion Summer Camp	01.0-90871.0-00000-00000-8699-74200000000
INSTRUCTIONAL	680.00	5/7/2026	Parents Donation Dual Immersion Summer Camp	01.0-90871.0-00000-00000-8699-74200000000
INSTRUCTIONAL	850.00	5/7/2026	Parents Donation Dual Immersion Summer Camp	01.0-90871.0-00000-00000-8699-74200000000
INSTRUCTIONAL	510.00	5/7/2026	Parents Donation Dual Immersion Summer Camp	01.0-90871.0-00000-00000-8699-74200000000
INSTRUCTIONAL	510.00	5/7/2026	Parents Donation Dual Immersion Summer Camp	01.0-90871.0-00000-00000-8699-74200000000
INSTRUCTIONAL	925.00	5/7/2026	Parents Donation Dual Immersion Summer Camp	01.0-90871.0-00000-00000-8699-74200000000
INSTRUCTIONAL	85.00	5/7/2026	Parents Donation Dual Immersion Summer Camp	01.0-90871.0-00000-00000-8699-74200000000
INSTRUCTIONAL	510.00	5/7/2026	Parents Donation Dual Immersion Summer Camp	01.0-90871.0-00000-00000-8699-74200000000
INSTRUCTIONAL	680.00	5/7/2026	Parents Donation Dual Immersion Summer Camp	01.0-90871.0-00000-00000-8699-74200000000
INSTRUCTIONAL	75.00	5/7/2026	Parents Donation Dual Immersion Summer Camp	01.0-90871.0-00000-00000-8699-74200000000
INSTRUCTIONAL	340.00	5/7/2026	Parents Donation Dual Immersion Summer Camp	01.0-90871.0-00000-00000-8699-74200000000
INSTRUCTIONAL	85.00	5/7/2026	Parents Donation Dual Immersion Summer Camp	01.0-90871.0-00000-00000-8699-74200000000
INSTRUCTIONAL	85.00	5/7/2026	Parents Donation Dual Immersion Summer Camp	01.0-90871.0-00000-00000-8699-74200000000
INSTRUCTIONAL	1,600.00	5/7/2026	Parents Donation Dual Immersion Summer Camp	01.0-90871.0-00000-00000-8699-74200000000
INSTRUCTIONAL	75.00	5/7/2026	Parents Donation Dual Immersion Summer Camp	01.0-90871.0-00000-00000-8699-74200000000
INSTRUCTIONAL	340.00	5/7/2026	Parents Donation Dual Immersion Summer Camp	01.0-90871.0-00000-00000-8699-74200000000
INSTRUCTIONAL	1,700.00	5/7/2026	Parents Donation Dual Immersion Summer Camp	01.0-90871.0-00000-00000-8699-74200000000
INSTRUCTIONAL	75.00	5/7/2026	Parents Donation Dual Immersion Summer Camp	01.0-90871.0-00000-00000-8699-74200000000
INSTRUCTIONAL	75.00	5/7/2026	Parents Donation Dual Immersion Summer Camp	01.0-90871.0-00000-00000-8699-74200000000
INSTRUCTIONAL	775.00	5/7/2026	Parents Donation Dual Immersion Summer Camp	01.0-90871.0-00000-00000-8699-74200000000
INSTRUCTIONAL	300.00	5/7/2026	Parents Donation Dual Immersion Summer Camp	01.0-90871.0-00000-00000-8699-74200000000
INSTRUCTIONAL	170.00	5/7/2026	Parents Donation Dual Immersion Summer Camp	01.0-90871.0-00000-00000-8699-74200000000
INSTRUCTIONAL	75.00	5/7/2026	Parents Donation Dual Immersion Summer Camp	01.0-90871.0-00000-00000-8699-74200000000

LOCATION	AMOUNT	DATE REC	DESCRIPTION	REV STRING
INSTRUCTIONAL	425.00	5/7/2026	Parents Donation Dual Immersion Summer Camp	01.0-90871.0-00000-00000-8699-74200000000
INSTRUCTIONAL	75.00	5/7/2026	Parents Donation Dual Immersion Summer Camp	01.0-90871.0-00000-00000-8699-74200000000
INSTRUCTIONAL	75.00	5/7/2026	Parents Donation Dual Immersion Summer Camp	01.0-90871.0-00000-00000-8699-74200000000
INSTRUCTIONAL	75.00	5/7/2026	Parents Donation Dual Immersion Summer Camp	01.0-90871.0-00000-00000-8699-74200000000
INSTRUCTIONAL	75.00	5/7/2026	Parents Donation Dual Immersion Summer Camp	01.0-90871.0-00000-00000-8699-74200000000
INSTRUCTIONAL	75.00	5/7/2026	Parents Donation Dual Immersion Summer Camp	01.0-90871.0-00000-00000-8699-74200000000
PROVIDENCIA	197.03	5/29/2026	READATHON AND PETER LARS	01.0-90201.0-00000-00000-8699-21300000000
PROVIDENCIA	2,456.33	5/29/2026	READATHON AND PETER LARS	01.0-90201.0-00000-00000-8699-21300000000
MCKINLEY	4,972.80	5/15/2026	READATHON FUNDRAISER FUNDS	01.0-90201.0-00000-00000-8699-20900000000
MCKINLEY	1,243.20	5/29/2026	READATHON FUNDRAISER FUNDS	01.0-90201.0-00000-00000-8699-20900000000
SPECIAL EDUCATION	19,319.92	5/7/2026	Rehabilitation 32978_12_25_ST	13.0-53108.0-00000-00000-9290-00000000000
SPECIAL EDUCATION	5,807.54	5/7/2026	Rehabilitation BUSD007	01.0-58100.0-50010-00000-8290-00000000000
DISTRICT OFFICE	3,110.77	5/29/2026	REVISED SMAA REIMB & ADMIN FEE 23/24 Q1	01.0-90350.0-00000-00000-8699-00000000000
DISTRICT OFFICE	70,739.35	5/29/2026	SMAA REIMB & ADMIN FEE 23/24 Q3	01.0-90350.0-00000-00000-8699-00000000000
DISTRICT OFFICE	37.42	5/15/2026	SMARTCHARCHING TECH MISC	01.0.00000.0-00000-00000-8699-00000000000
DISTRICT OFFICE	73.71	5/7/2026	UME EAP 5/2026 Enrollment	01.0-00000.0-00000-00000-9530-00000000000
DISTRICT OFFICE	71.82	5/29/2026	UME EAP ENROLLMENT 06/2026	01.0-00000.0-00000-00000-9530-00000000000
Donations/Gifts/Grants	1,653,651.16			
Miller	100.00	4/23/2026	To replenish monies transferred temporarily for completing funds for 5th grade field trip ac	01.0-90201-0-00000-00000-8699-21000000000
Edison	555.00	4/28/2026	3rd grade field trip	01.0-90201-0-00000-00000-8699-20200000000
Washington	50.00	5/1/2026	OSS	01.0-90880.0-00000-00000-8699-21600000000
Special Ed	3,207.00	5/1/2026	FACTS - Diamond Art Sale Receipts	01.0-90581-0-00000-00000-8699-53300000000
Misc (D.O.)	12.45	5/1/2026	Misc. Postage	01.0-00000-0-00000-00000-8699-74000000000
Miller	392.00	5/6/2026	Pay Field Trip Buses	01.0-90201-0-00000-00000-8699-21000000000
Miller	64.00	5/6/2026	Transportation for field trip buses.	01.0-90201-0-00000-00000-8699-21000000000
Stevenson	1,057.00	5/13/2026	Umbrella purchase	01.0-90201.0-00000-00000-8699-21500000000
Stevenson	475.00	5/14/2026	Marquee sign used to display birthday messages	01.0-90201.0-00000-00000-8699-21500000000
Providencia	200.00	5/14/2026	OSS Cash	01.0-90880.0-00000-00000-8699-21300000000
Washington	1,070.00	5/15/2026	OSS Fall 2026	01.0-90880.0-00000-00000-8699-21600000000
Washington	800.00	5/15/2026	OSS Fall 2026	01.0-90880.0-00000-00000-8699-21600000000
Cash Deposits	7,982.45			
Total Misc Receipts	**1,827,902.79**			

Burbank Unified School District
Instructional Services

REPORT TO THE BOARD

TO:	Members of the Board of Education
FROM:	Peter Knapik, Assistant Superintendent of Educational Services
PREPARED BY:	Peter Knapik, Assistant Superintendent of Educational Services
SUBMITTED BY:	Laura Erisman, Administrative Secretary
DATE:	June 25, 2026
SUBJECT:	Approval of Instructional Consultant Services

Background:
The purpose of the Instructional Consultant Services is to enrich student learning. Consultants are selected based on their qualifications regarding specific subject areas. When a consultant is selected, the consultant company/organization must complete the required paperwork for the district to ensure that district students receive the services they require. The Board of Education must approve all consultant requests before services are rendered.

Discussion and Issues:
Sites submit the required paperwork to Instructional/Educational Services. Work must not begin until the site receives confirmation of Board approval from Instructional/Educational Services. If the Consultant assignment requires unsupervised contact with the student(s) during the contract period, the Consultant must provide Department of Justice fingerprint clearance through the District's Human Resources Services.

Fiscal Impact:
See Attached

Recommendation:
Peter Knapik, Assistant Superintendent of Educational Services, recommends that the Board of Education approve the instructional consultant services for on-site student learning support and staff development and exercise authority to sign the agreements pursuant to BUSD-AR 3314, as presented.

BURBANK UNIFIED SCHOOL DISTRICT
INSTRUCTIONAL SERVICES
APPROVAL OF INSTRUCTIONAL CONSULTANT SERVICES

Board Meeting Date: June 25, 2026

Site	Name	Purpose	Dates	Cost	Appropriation Number
Burbank Adult School	Dolores (Dee) Niedringhaus	.To complete Vocational Nursing Program Approval for the State.	7/1/26-6/30/27	Not to Exceed $63,000	11.0-63910.0-41104-10000-5850-5330000

BURBANK UNIFIED SCHOOL DISTRICT
1900 W. Olive Avenue • Burbank, CA 91506-2460 • (818) 729-4400

AGREEMENT FOR CONSULTANT SERVICES

This Agreement, made and entered into this 1 day of July 1, 2026 by and between the **Burbank Unified School District**, hereinafter referred to as "District", and Dee Niedringhaus hereinafter referred to as "Consultant."

Dolores (Dee) Niedringhaus [redacted] [redacted]
Payee's Name (Person or Company) Social Security or Federal I.D. # Phone Number

Mailing Address [redacted] 92646
City State Zip

Sponsoring Administrator: Juan Noguera Director Adult Ed BAS
Print Name Title Location

Date Submitted to Board: 6/25/2026 Funding Source (Resource): 11.0-63910.0-41104-10000-5850-5330000

STRS/PERS Member: Yes X No

The assignment **will** ☐ **will not X** require Consultant to work with pupil(s) unsupervised in a program sponsored by the District during the contract period. If it does, the Consultant will be contacted by HR and provide the DOJ & FBI clearance form to complete as required by AB346. The consultant will be responsible for associated costs of fingerprinting. **Consultant shall not begin service until HR receives clearance.**

WITNESSETH:

WHEREAS, the District is authorized pursuant to Education Code section 35160 and Government Code Section 53060 to contract for the services of consultants;
WHEREAS, the Consultant is especially trained, experienced and competent to provide such services;
WHEREAS, in consideration of the mutual promises of the parties, hereto, the District hereby retains the Consultant upon the terms and conditions hereinafter set forth, and the Consultant hereby accepts said retention and agrees to perform the services hereinafter mentioned, upon said terms and conditions;
NOW THERFORE, the parties mutually agree as follows:

1. The Consultant agrees to perform the following services for the District, at a rate of $ 75 per hour ☐ / per day ☐ / per session ☐ for a total not to exceed $ 63,000 , including benefits.
2. The term of the Agreement shall be the period commencing on 7/1/2026 and terminating on 6/30/2026
   a. Contracts shall not cross fiscal years.
3. Consultant will provide the services as listed in the Scope of Work following this agreement.
4. The Consultant shall submit invoicing on a monthly basis, or at the conclusion of this contract agreement to the BUSD Consultant Portal. The approving administrator of the time spent in providing the services and preparing the products required by this Agreement is a required component of the Consultant Portal Form. Consultant will be paid on a monthly basis or at the conclusion of this contract as in the agreement.
5. It is expressly understood and agreed to by both parties that the Consultant, while engaged in carrying out and complying with any of the terms and conditions of this contract, is an independent contractor and is not an officer, agent or employee of the aforesaid District.

6. Consultant agrees to maintain insurance coverage sufficient to support its obligations under this Agreement, with minimum limits of liability not less than $1,000,000. Additional insurance coverage for Workers Compensation and/or Automobile Liability may be required.
7. Consultant agrees to hold harmless, defend, and indemnify the District, its Governing Board, administrators, directors, employees, agents, affiliates, successors, and assigns from and against any and all losses, damages, liabilities, claims, actions, judgments, court costs, and legal or other expenses (including, without limitation, reasonable legal fees) (collectively, "Claims") that the District may suffer or incur as a result of or arising directly or indirectly as a result of Consultant's performance or failure to perform services under this Agreement.
8. This agreement may be terminated at any time based upon the mutual agreement of the parties hereto. This agreement may also be terminated immediately by the District should the Consultant breach this agreement or fail to perform the required services in a satisfactory manner.
9. Consultant agrees to pay all federal, state and local taxes, and fees that are owed as a result of payments made to Consultant pursuant to this agreement. Consultant agrees to indemnify and hold harmless the District from any and all costs, loss, or liability whatsoever arising from or caused by any challenge to the payments made to Consultant pursuant to this agreement, including but not limited to any liabilities or penalties assessed or levied by any and all local, state, or federal taxing authorities against the District.
10. Consultant agrees, if requested by the District, to furnish a conditional waiver and release together with invoices, and an unconditional waiver and release within 10 days of receipt of payment of such invoices.
11. Consultant agrees to ensure that they do not exceed the applicable earnings limitation under CALPERS or STRS and agrees to be solely responsible for any actions taken by CALPERS or STRS as a result of exceeding the applicable earnings limitation.

Burbank Unified School District of Los Angeles County
IN WITNESS THEREOF, the parties hereto have set their hands on the day and in the month and year first above written.

Juan Noguera
Administrator

Director of Adult Education
Title

Board Approval Date

Consultant

[redacted]
Address

[redacted]
City, State ZIP

Instructions: Consultant is to sign and return two copies to the sponsoring administrator's office. After the BUSD Executive Cabinet has reviewed, this will proceed for Board approval. Once Board approved, a requisition should be entered with this attached agreement.

Revised 7/17/2025

STATEMENT OF WORK

Program/Project Purpose: Complete Vocational Nursing Program Approval

Basis for Request: The process for VN approval is complicated. Guidance with collaboration will strengthen the new program and successful outcome.

- Support school administrator with the paperwork required to get the program approved by the state
- Help with filling all the required paperwork
- Guide the administration with purchasing all the devices needed to start the program
- Provide guidance with hiring the supervisor of the program

Background/Scope/Objectives: Consultant meets regularly with BAS administrators to plan and submit documents to the state to finalize the process of getting the program approved. BAS currently has short CTE careers such as Clinical Medical Assistant, Certified Nursing Assistant, Medical Terminology, and Pharmacy Technician. Bringing the Vocational Nursing program will be a great accomplishment for the entire school community. This program is the capstone for all the other courses previously mentioned.

- The consultant will meet with the administration team
- The consultant will help revising and filling out the required paperwork
- The consultant will provide support in the hiring process
- The consultant will serve as a liaison with the Board of Vocational Nursing

Deliverable/Milestones:

- Help submitting thirty-one (31) folders to the Board of Vocational Nursing
- Assist with the items needed to set up the training classroom for students
- Monitor the inventory list to identify missing or required items before starting the program
- Support with recruiting nurses to teach in the program
- Revise the interview questions for prospective candidates who will teach in the program

Invoice Approver: Juan Noguera, Director of Adult Education

Timeline: Program should be approved by January 2026; monitor the program initial stages for the next six (6) months (June 30, 2027)

Payment Terms: Consultant will get paid $75.00 per hour not to exceed 840 hours for the next twelve months commencing on July 1, 2026.

Burbank Unified School District
Special Education Department

REPORT TO THE BOARD

TO:	Members of the Board of Education
FROM:	Peter Knapik, Assistant Superintendent of Educational Services
PREPARED BY:	Jennifer Nicholson, Director of Special Education and Psychological Services
SUBMITTED BY:	Sandra Shearer, Administrative Secretary II
DATE:	June 25, 2026
SUBJECT:	Approval of Final Settlement Agreement (Special Education)

Background:

The Board of Education is being asked to approve the Final Settlement Agreement for Special Education student 960027543 pursuant to California Education Code (Sections 17604 and 35163), as presented in the Confidential Exhibit.

Discussion/Issues:

In an effort to resolve the disagreement between the District and the parent of Special Education student 960027543 concerning services and/or school placement, a formal settlement agreement was offered on June 8, 2026 to the parents. To avoid additional time and expense concerning this matter, the District settled the dispute with the student's parents, without admitting any liability.

Fiscal Impact:

There is no cost to the District.

Recommendation:

Peter Knapik, Assistant Superintendent of Educational Services, recommends that the Board of Education approve Final Settlement Agreement for Special Education student 960027543, at no cost to the district, June 26, 2026 through August 30, 2026, and that authority to sign the agreement be exercised pursuant to BUSD-AR 3314, as presented.

Burbank Unified School District
Special Education Department

REPORT TO THE BOARD

TO:	Members of the Board of Education
FROM:	Peter Knapik, Assistant Superintendent of Educational Services
PREPARED BY:	Jennifer Nicholson, Director of Special Education and Psychological Services
SUBMITTED BY:	Sandra Shearer, Administrative Secretary II
DATE:	June 25, 2026
SUBJECT:	Approval of Final Settlement Agreement (Special Education)

Background:

The Board of Education is being asked to approve the Final Settlement Agreement for Special Education student 960032802 pursuant to California Education Code (Sections 17604 and 35163), as presented in the Confidential Exhibit.

Discussion/Issues:

In an effort to resolve the disagreement between the District and the parent of Special Education student 960032802 concerning services and/or school placement, a formal settlement agreement was offered on May 15, 2026 to the parents. To avoid additional time and expense concerning this matter, the District settled the dispute with the student's parents, without admitting any liability.

Fiscal Impact:

Not to exceed $15,880

Recommendation:

Peter Knapik, Assistant Superintendent of Educational Services, recommends that the Board of Education approve Final Settlement Agreement for Special Education student 960032802, total not to exceed $15,880, (01.0-65000.0-50010-36000-5813-7440000), June 1, 2024 through December 31, 2027 and that authority to sign the agreement be exercised pursuant to BUSD-AR 3314, as presented.

Burbank Unified School District
Special Education Department

REPORT TO THE BOARD

TO:	Members of the Board of Education
FROM:	Peter Knapik, Assistant Superintendent of Educational Services
PREPARED BY:	Jennifer Nicholson, Director of Special Education and Psychological Services
SUBMITTED BY:	Sandra Shearer, Administrative Secretary II
DATE:	June 25, 2026
SUBJECT:	Approval of Final Settlement Agreement (Special Education)

Background:

The Board of Education is being asked to approve the Final Settlement Agreement for Special Education student 960035252 pursuant to California Education Code (Sections 17604 and 35163), as presented in the Confidential Exhibit.

Discussion/Issues:

In an effort to resolve the disagreement between the District and the parent of Special Education student 960035252 concerning services and/or school placement, a formal settlement agreement was offered on May 7, 2026 to the parents. To avoid additional time and expense concerning this matter, the District settled the dispute with the student's parents, without admitting any liability.

Fiscal Impact:

Not to exceed $7,250

Recommendation:

Peter Knapik, Assistant Superintendent of Educational Services, recommends that the Board of Education approve Final Settlement Agreement for Special Education student 960035252, total not to exceed $7,250, (01.0-65000.0-50010-36000-5813-7440000), June 1, 2025 school year through May 1, 2028 and that authority to sign the agreement be exercised pursuant to BUSD-AR 3314, as presented.

Burbank Unified School District
Special Education Department

REPORT TO THE BOARD

TO:	Members of the Board of Education
FROM:	Peter Knapik, Assistant Superintendent of Educational Services
PREPARED BY:	Jennifer Nicholson, Director of Special Education and Psychological Services
SUBMITTED BY:	Sandra Shearer, Administrative Secretary II
DATE:	June 25, 2026
SUBJECT:	Approval of Agreement for Professional Services Provided by Burbank Optometric Center, Inc. for Special Education Students

---

Background:

The Board of Education is being asked to approve an agreement for professional services to provide compensatory education in the area of vision therapy for Special Education student 960027543, pursuant to California Education Code (Sections 17604 and 35163), as presented in the Confidential Exhibit.

Discussion/Issues:

The District is currently obligated to provide services for students who are Burbank residents whose IEPs require such services. If the District does not have qualified staff to perform specific services, it is obligated to contract outside the District for such services.

Fiscal Impact:

Not to exceed $5,500.

Recommendation:

Peter Knapik, Assistant Superintendent of Educational Services, recommends that the Board of Education approve an agreement between the Burbank Unified School District and Burbank Optometric Center, Inc., to provide compensatory education, not to exceed $5,500 (01.0-65000.0-57602-11900-5850-744000) for Special Education student 960027543, effective June 26, 2026 through August 30, 2026, and that authority to sign the agreement be exercised pursuant to BUSD-AR 3314, as presented.

Burbank Unified School District
1900 West Olive Avenue, Burbank, 91506
Tel: (818) 729-4473
Fax: (818) 729-4573
www.burbankusd.org

TERMS OF AGREEMENT

This Agreement, made and entered into this 8th day of June 2026 by and between the **Burbank Unified School District**, hereinafter referred to as "District", and Burbank Optometric Center, Inc. hereinafter referred to as "Provider."

Payee's Name: Burbank Optometric Center, Inc. Daytime Phone Number: 818-845-3549

Mailing Address: 1032 N. Hollywood Way Burbank, CA 91505

Email Address: info@burbankoc.com

Sponsoring Administrator: _____ Assistant Superintendent _____ Special Education
Print Name Title Signature Location

Board Approval: 06/25/2026 Account Code: 01.0-65000.0-57602-11900-5850-7440000

The District is authorized pursuant to Education Code section 35160 and Government Code Section 53060 to contract for the services of Providers.

WHEREAS, the Provider is especially trained, experienced and competent to provide such services;

WHEREAS, in consideration of the mutual promises of the parties, hereto, the District hereby retains the Provider upon the terms and conditions hereinafter set forth, and the Provider hereby accepts said retention and agrees to perform the services hereinafter mentioned, upon said terms and conditions;

The parties mutually agree as follows:

1. The Provider agrees to perform the following services for the District, at a rate of $275 per session for a total not to exceed **$5,500**.

2. The term of the Agreement shall be the period commencing on: 06/26/2026 and terminating on: 08/30/2026.

3. Payment Terms: Net 45 Days

4. In no case should initial payment claim submission or initial rebillings/retroactive billing for any fiscal year (July through June) extend beyond **sixty (60) days after the close of the fiscal year**. Invoices received for a closed fiscal year beyond the sixty (60) day period will be returned unpaid and should be removed from the Providers accounts receivable. Exceptions to the above must be requested in writing and approved by the Special Education Administrator.

5. District desires to enter into an Agreement in which Burbank Optometric Center, Inc. will provide up to 20 sessions of vision therapy for Special Education Student 960027543.

6. Provider shall provide a clear and concise invoice noting the time spent in providing the services and preparing the products required by this Agreement. Provider will be paid at the conclusion of this contract unless otherwise stated in the payment terms above.

7. It is expressly understood and agreed to by both parties hereto that the Provider, while engaged in carrying out and complying with any of the terms and conditions of this contract, is an independent contractor and is not an officer, agent or employee of the aforesaid District.

8. Provider shall comply with the requirements of California Education Code sections 44237, 35021.1, 35021.2, and 56366.1 including, but not limited to: obtaining clearance from the California Department of Justice (hereinafter

referred to as "CDOJ") for Provider's employees, volunteers, subProviders, related outside agency service Provider's staff or any person with regular student contact employed directly or indirectly by it prior to service with any Burbank Unified School District (BUSD) student. Provider hereby agrees that Provider's employees, volunteers, subProviders or any person employed directly or indirectly (such as Department of Probation, Department of

Children and Family Services, and/or Los Angeles Department of Children's Services) by it shall not come in contact with BUSD students, in person or virtually, until CDOJ clearance is ascertained. Provider shall certify in writing to BUSD that none of its employees, and volunteers, subProviders or any person employed directly or indirectly by it who may come into contact with BUSD students have been convicted of a violent or serious felony as those terms are defined in California Education Code section 44237(h), unless despite the employee's conviction of a violent or serious felony, he or she has met the criteria to be eligible for employment pursuant to California Education Code section 44237 (i) or (j). Provider shall certify to BUSD that they have successful background checks and enrolled in subsequent arrest notification service for all employees who may come into contact with students. In addition, Provider shall make a request for subsequent arrest service from the CDOJ as required by California Penal Code section 11105.2.

Notwithstanding the restrictions on sharing and destroying criminal background check information, Provider, upon demand, shall make available to evidence of a successful criminal background check clearance and enrollment in subsequent arrest notice service, as provided, for each owner, operator, and employee of the nonpublic, nonsectarian school or agency. Provider is required to retain the evidence, as specified, for all staff, including those licensed or credentialed by another state agency. Background clearances and proof of subsequent arrest notification service as required by California Penal Code section 11105.2 for all staff shall be provided upon request.

9. Provider shall comply with the requirements of California Education Code sections 35021 *et. seq.* and 49406 regarding the examination of Provider's employees and volunteers for tuberculosis. Provider shall ensure and provide upon request to BUSD documentation for each individual volunteering, employed, contracted, and/or otherwise hired by Provider of such compliance before an individual comes in contact with a BUSD student.

10. Provider shall comply with OSHA Blood Borne Pathogens Standards, 29 Code of Federal Regulations section 1910.1030, when providing medical treatment or assistance to a BUSD student. Provider further agrees to provide annual training regarding universal health care precautions and to post required notices in areas designated in the California Health and Safety Code.

11. Provider agrees to defend, indemnify, save, and hold harmless the District, its governing body, the individual members thereof, and all officers, agents and employees of the District from all loss, cost, and expense arising out of any liability or claim of liability for injury, damage, or loss sustained or claimed to have been sustained arising out of, or occurring as a result of Provider's performance or failure to perform services under this Agreement.

12. This agreement may be terminated at any time based upon the mutual agreement of the parties hereto. This agreement may also be terminated immediately by the District should the Provider breach this agreement or fail to perform the required services in a satisfactory manner.

13. Provider agrees to pay all Federal, State and Local taxes, and fees that are owed as a result of payments made to Provider pursuant to this agreement. Provider agrees to indemnify and hold harmless the District from any and all costs, loss, or liability whatsoever arising from or caused by any challenge to the payments made to Provider pursuant to this agreement, including but not limited to any liabilities or penalties assessed or levied by any and all local, state, or federal taxing authorities against the District.

14. Provider agrees to ensure that they do not exceed the applicable earnings limitation under CALPERS or STRS and agrees to be solely responsible for any actions taken by CALPERS or STRS as a result of exceeding the applicable earnings limitation.

15. District and Provider will communicate and send in writing all information received by the District regarding any work-related injury to Personnel within twenty-four hours of the injury.

16. Communicate within twenty-four hours to Burbank Optometric Center, Inc. the details of any incident, which may result in a complaint against any Personnel regarding professional services given by the Personnel.

17. The District agrees to indemnify, defend and hold harmless Burbank Optometric Center, Inc. from any and all negligence and all liabilities, claims, losses, costs, damages and expenses resulting or arising from or connected with the services rendered by the District, its agents, independent contractors, employees or servants pursuant to this contract.

18. This Agreement shall constitute the entire Agreement between the parties and any prior understanding or representation of any kind preceding the date of this Agreement shall not be binding upon either party except to the extent incorporated in this Agreement.

19. It is mutually agreed that both parties shall not discriminate against any individual in the performance of their obligations under this Agreement, on the basis of race, color, religion, national origin, sex, age or disability. Both parties further certify compliance with the applicable provisions of the Civil Rights Act of 1964, the Rehabilitation Act of 1973, and the Americans with Disabilities Act and State anti-discrimination laws.

INDEMNIFICATION

Burbank Optometric Center, Inc. shall save and hold the District harmless from and against and shall indemnify District for any liability, loss, cost, expense or damage whatsoever caused by reason of any injury sustained by any person or to property by reason of any act, neglect, default or omission of Burbank Optometric Center, Inc. or any of its agents, subcontractors, employees or other representatives. If District is sued in any court for damages by reason of any of the acts of Burbank Optometric Center, Inc., its agents, subcontractors, employees or other representatives referred to in this Agreement, Burbank Optometric Center, Inc. shall defend said action (or cause same to be defended) as its own expense and shall pay any discharge and judgment that may be rendered in any such action. If Burbank Optometric Center, Inc. fails or neglects to so defend said action, District may defend the same and any expenses, including reasonable Attorney fees, which District may pay or incur in defending said action and the amount of any judgment which District may be required to pay shall be promptly reimbursed by Burbank Optometric Center, Inc. demand.

District shall save and hold Burbank Optometric Center, Inc., harmless from and against and shall indemnify Burbank Optometric Center, Inc. for any liability, loss, cost, expense or damage whatsoever caused by reason of any injury sustained by any person or to property by reason of any act, neglect, default or omission of District, or any of its agents, subcontractors, employees or other representatives. If Burbank Optometric Center, Inc. is sued in any court for damages by reason of any of the acts of the District, its agents, subcontractors, employees or other representatives referred to in this Agreement, District shall defend said action (or cause same to be defended) as its own expense and shall pay any discharge and judgment that may be rendered in any such action. If District fails or neglects to so defend said action, Burbank Optometric Center, Inc. may defend the same and any expenses, including reasonable attorney's fees, which Burbank Optometric Center, Inc. may pay or incur in defending said action and the amount of any judgment which Burbank Optometric Center, Inc. may be required to pay shall be promptly reimbursed by District upon demand.

ARBITRATION

Any controversy or claim arising out of or relating to this Agreement, or the performance or breach thereof, shall be settled by means of binding arbitration in accordance with the rules of the American Arbitration Association, at Los Angeles, California.

If either party to this Agreement institutes any legal action or proceeding against the other party to the Agreement arising out of the Agreement, the prevailing party shall be entitled to recover its reasonable attorney's fees and costs from the non-prevailing party.

ACKNOWLEDGED AND AGREED TO

District:

Burbank Unified School District
District/Company Name

Jennifer Nicholson
Print Representative Name

Director of Special Education
Title

Signature

Date

ACKNOWLEDGED AND AGREED TO

Provider:

Burbank Optometric Center, Inc.
Provider/Company

Print Representative Name

Title

Signature

Date

Burbank Unified School District
Special Education Department

REPORT TO THE BOARD

TO:	Members of the Board of Education
FROM:	Peter Knapik, Assistant Superintendent of Educational Services
PREPARED BY:	Jennifer Nicholson, Director of Special Education and Psychological Services
SUBMITTED BY:	Sandra Shearer, Administrative Secretary II
DATE:	June 25, 2026
SUBJECT:	Approval of Agreement for Professional Services Provided by Karen Lynn Epport, Ph.D. (Special Education)

Background:

The Board of Education is being asked to approve an agreement for professional services to provide a psychoeducational and speech and language IEE for Special Education student 960032256, pursuant to California Education Code (Sections 17604 and 35163), as presented in the Confidential Exhibit.

Discussion/Issues:

The District is currently obligated to provide services for students who are Burbank residents whose IEPs require such services. If the District does not have qualified staff to perform specific services, it is obligated to contract outside the District for such services.

Fiscal Impact:

Not to exceed $10,000.

Recommendation:

Peter Knapik, Assistant Superintendent of Educational Services, recommends that the Board of Education approve an agreement between the Burbank Unified School District and Karen Lynn Epport, Ph.D., to provide a psychoeducational and speech and language IEE, not to exceed $10,000 (01.0-65000.0-57602-11901-5850-744000) for Special Education student 960032256, effective June 26, 2026 through December 30, 2026, and that authority to sign the agreement be exercised pursuant to BUSD-AR 3314, as presented.

Burbank Unified School District
1900 West Olive Avenue, Burbank, 91506
Tel: (818) 729-4473
Fax: (818) 729-4573
www.burbankusd.org

TERMS OF AGREEMENT

This Agreement, made and entered into this 9th day of June 2026 by and between the **Burbank Unified School District**, hereinafter referred to as "District", and Karen Lynn Epport hereinafter referred to as "Provider."

Payee's Name: Karen Lynn Epport Daytime Phone Number: [redacted]

Mailing Address: [redacted] Email Address: [redacted]

Sponsoring Administrator: _____ Assistant Superintendent _____ Special Education
Print Name Title Signature Location

Board Approval: 06/25/2026 Account Code: 01.0-65000.0-57602-11901-5850-7440000

The District is authorized pursuant to Education Code section 35160 and Government Code Section 53060 to contract for the services of Providers.

WHEREAS, the Provider is especially trained, experienced and competent to provide such services;

WHEREAS, in consideration of the mutual promises of the parties, hereto, the District hereby retains the Provider upon the terms and conditions hereinafter set forth, and the Provider hereby accepts said retention and agrees to perform the services hereinafter mentioned, upon said terms and conditions;

The parties mutually agree as follows:

1. The Provider agrees to perform the following services for the District, at a rate not to exceed $10,000 **Amount to include speaking fee, mileage and any additional fees.

2. The term of the Agreement shall be the period commencing on: 06/26/2026 and terminating on: 12/30/2026.

3. Payment Terms: Net 45 Days

4. In no case should initial payment claim submission or initial rebillings/retroactive billing for any fiscal year (July through June) extend beyond **sixty (60) days after the close of the fiscal year**. Invoices received for a closed fiscal year beyond the sixty (60) day period will be returned unpaid and should be removed from the Providers accounts receivable. Exceptions to the above must be requested in writing and approved by the Special Education Administrator.

5. District desires to enter into an Agreement in which Karen Lynn Epport will provide a Psychoeducational and Speech and Language IEE for Special Education student 960032256.

6. The Provider shall provide a clear and concise invoice noting the time spent in providing the services and preparing the products required by this Agreement. Provider will be paid at the conclusion of this contract unless otherwise stated in the payment terms above.

7. It is expressly understood and agreed to by both parties hereto that the Provider, while engaged in carrying out and complying with any of the terms and conditions of this contract, is an independent contractor and is not an officer, agent or employee of the aforesaid District.

8. Provider shall comply with the requirements of California Education Code sections 44237, 35021.1, 35021.2, and 56366.1 including, but not limited to: obtaining clearance from the California Department of Justice (hereinafter

referred to as "CDOJ") for Provider's employees, volunteers, subProviders, related outside agency service Provider's staff or any person with regular student contact employed directly or indirectly by it prior to service with any Burbank Unified School District (BUSD) student. Provider hereby agrees that Provider's employees, volunteers, subProviders or any person employed directly or indirectly (such as Department of Probation, Department of

Children and Family Services, and/or Los Angeles Department of Children's Services) by it shall not come in contact with BUSD students, in person or virtually, until CDOJ clearance is ascertained. Provider shall certify in writing to BUSD that none of its employees, and volunteers, subProviders or any person employed directly or indirectly by it who may come into contact with BUSD students have been convicted of a violent or serious felony as those terms are defined in California Education Code section 44237(h), unless despite the employee's conviction of a violent or serious felony, he or she has met the criteria to be eligible for employment pursuant to California Education Code section 44237 (i) or (j). Provider shall certify to BUSD that they have successful background checks and enrolled in subsequent arrest notification service for all employees who may come into contact with students. In addition, Provider shall make a request for subsequent arrest service from the CDOJ as required by California Penal Code section 11105.2.

Notwithstanding the restrictions on sharing and destroying criminal background check information, Provider, upon demand, shall make available to evidence of a successful criminal background check clearance and enrollment in subsequent arrest notice service, as provided, for each owner, operator, and employee of the nonpublic, nonsectarian school or agency. Provider is required to retain the evidence, as specified, for all staff, including those licensed or credentialed by another state agency. Background clearances and proof of subsequent arrest notification service as required by California Penal Code section 11105.2 for all staff shall be provided upon request.

9. Provider shall comply with the requirements of California Education Code sections 35021 *et. seq.* and 49406 regarding the examination of Provider's employees and volunteers for tuberculosis. Provider shall ensure and provide upon request to BUSD documentation for each individual volunteering, employed, contracted, and/or otherwise hired by Provider of such compliance before an individual comes in contact with a BUSD student.

10. Provider shall comply with OSHA Blood Borne Pathogens Standards, 29 Code of Federal Regulations section 1910.1030, when providing medical treatment or assistance to a BUSD student. Provider further agrees to provide annual training regarding universal health care precautions and to post required notices in areas designated in the California Health and Safety Code.

11. Provider agrees to defend, indemnify, save, and hold harmless the District, its governing body, the individual members thereof, and all officers, agents and employees of the District from all loss, cost, and expense arising out of any liability or claim of liability for injury, damage, or loss sustained or claimed to have been sustained arising out of, or occurring as a result of Provider's performance or failure to perform services under this Agreement.

12. This agreement may be terminated at any time based upon the mutual agreement of the parties hereto. This agreement may also be terminated immediately by the District should the Provider breach this agreement or fail to perform the required services in a satisfactory manner.

13. Provider agrees to pay all Federal, State and Local taxes, and fees that are owed as a result of payments made to Provider pursuant to this agreement. Provider agrees to indemnify and hold harmless the District from any and all costs, loss, or liability whatsoever arising from or caused by any challenge to the payments made to Provider pursuant to this agreement, including but not limited to any liabilities or penalties assessed or levied by any and all local, state, or federal taxing authorities against the District.

14. Provider agrees to ensure that they do not exceed the applicable earnings limitation under CALPERS or STRS and agrees to be solely responsible for any actions taken by CALPERS or STRS as a result of exceeding the applicable earnings limitation.

15. District and Provider will communicate and send in writing all information received by the District regarding any work-related injury to Personnel within twenty-four hours of the injury.

16. Communicate within twenty-four hours to Karen Lynn Epport the details of any incident, which may result in a complaint against any Personnel regarding professional services given by the Personnel.

17. The District agrees to indemnify, defend and hold harmless Karen Lynn Epport from any and all negligence and all liabilities, claims, losses, costs, damages and expenses resulting or arising from or connected with the services rendered by the District, its agents, independent contractors, employees or servants pursuant to this contract.

18. This Agreement shall constitute the entire Agreement between the parties and any prior understanding or representation of any kind preceding the date of this Agreement shall not be binding upon either party except to the extent incorporated in this Agreement.

19. It is mutually agreed that both parties shall not discriminate against any individual in the performance of their obligations under this Agreement, on the basis of race, color, religion, national origin, sex, age or disability. Both parties further certify compliance with the applicable provisions of the Civil Rights Act of 1964, the Rehabilitation Act of 1973, and the Americans with Disabilities Act and State anti-discrimination laws.

INDEMNIFICATION

Karen Lynn Epport shall save and hold the District harmless from and against and shall indemnify District for any liability, loss, cost, expense or damage whatsoever caused by reason of any injury sustained by any person or to property by reason of any act, neglect, default or omission of Karen Lynn Epport or any of its agents, subcontractors, employees or other representatives. If District is sued in any court for damages by reason of any of the acts of Karen Lynn Epport, its agents, subcontractors, employees or other representatives referred to in this Agreement, Karen Lynn Epport shall defend said action (or cause same to be defended) as its own expense and shall pay any discharge and judgment that may be rendered in any such action. If Karen Lynn Epport fails or neglects to so defend said action, District may defend the same and any expenses, including reasonable Attorney fees, which District may pay or incur in defending said action and the amount of any judgment which District may be required to pay shall be promptly reimbursed by Karen Lynn Epport demand.

District shall save and hold Karen Lynn Epport, harmless from and against and shall indemnify Karen Lynn Epport for any liability, loss, cost, expense or damage whatsoever caused by reason of any injury sustained by any person or to property by reason of any act, neglect, default or omission of District, or any of its agents, subcontractors, employees or other representatives. If Karen Lynn Epport is sued in any court for damages by reason of any of the acts of the District, its agents, subcontractors, employees or other representatives referred to in this Agreement, District shall defend said action (or cause same to be defended) as its own expense and shall pay any discharge and judgment that may be rendered in any such action. If District fails or neglects to so defend said action, Karen Lynn Epport may defend the same and any expenses, including reasonable attorney's fees, which Karen Lynn Epport may pay or incur in defending said action and the amount of any judgment which Karen Lynn Epport may be required to pay shall be promptly reimbursed by District upon demand.

ARBITRATION

Any controversy or claim arising out of or relating to this Agreement, or the performance or breach thereof, shall be settled by means of binding arbitration in accordance with the rules of the American Arbitration Association, at Los Angeles, California.

If either party to this Agreement institutes any legal action or proceeding against the other party to the Agreement arising out of the Agreement, the prevailing party shall be entitled to recover its reasonable attorney's fees and costs from the non-prevailing party.

ACKNOWLEDGED AND AGREED TO

District:

Burbank Unified School District
District/Company Name

Jennifer Nicholson
Print Representative Name

Director of Special Education
Title

_____
Signature

_____
Date

ACKNOWLEDGED AND AGREED TO

Provider:

Karen Lynn Epport
Provider/Company

_____
Print Representative Name

_____
Title

_____
Signature

_____
Date

Burbank Unified School District
Special Education Department

REPORT TO THE BOARD

TO:	Members of the Board of Education
FROM:	Peter Knapik, Assistant Superintendent of Educational Services
PREPARED BY:	Jennifer Nicholson, Director of Special Education and Psychological Services
SUBMITTED BY:	Sandra Shearer, Administrative Secretary II
DATE:	June 25, 2026
SUBJECT:	Approval of Agreement for Professional Services Provided by First Student, Inc. for Special Education Students

---

Background:

Burbank Unified School District has contracted with First Student, Inc. for home-to-school special education transportation since August 2012. The latest contract in effect expires on June 30, 2026.

Discussion/Issues:

The District will renew the contract with First Student Inc. that was awarded through a Request for Proposal #2425-030 on April 18, 2025, along with an extension document that allows for contracting with FirstAlt, for home-to-school special education transportation. The contract term is through June 30, 2028, with an option to be extended on a year-to-year basis for an additional 2 more years.

Rate adjustments for the 2026/2027 school year included a 3.02% rate increase for First Student and a 1.5% rate increase for FirstAlt. There is an increase in cost to cover driver and technician wages, insurance, vehicle maintenance, and fuel.

Fiscal Impact:

See attached rate sheet. A total cost of $4,600,000 represents the approximate $4,500,000 cost of transportation for the 2025/2026 school year plus an approximate 3% increase that was negotiated for the 2026/2027 fiscal year.

Recommendation:

Peter Knapik, Assistant Superintendent of Educational Services, recommends that the Board of Education approve an agreement between the Burbank Unified School District and First Student, Inc., to provide transportation services for Special Education students, for a total not to exceed of $4,600,000 (01.0-07240.0-50010-36000-5812-7440000), effective July 1, 2026 through June 30, 2027, and that authority to sign the agreement be exercised pursuant to BUSD-AR 3314, as presented.

AGREEMENT FOR FURNISHING
PUPIL TRANSPORTATION SERVICES

THIS AGREEMENT, made the 19th day of August, 2025, in the County of Los Angeles, State of California, by and between **BURBANK UNIFIED SCHOOL DISTRICT**, hereinafter called the District, and **FIRST STUDENT, INC.** hereinafter called the Contractor.

WITNESSETH that the District and the Contractor, for the considerations stated herein, and for other good and valuable consideration, the receipt and sufficiency of which are hereby acknowledged, hereby agree as follows:

ARTICLE 1 - SCOPE OF WORK

The Contractor shall provide during the term hereof all labor, services, materials (including vehicles), and transportation in connection with the following titled project:

REQUEST FOR PROPOSAL NO. 2425-030
Transportation Services for Qualified Students

It is the duty of the Contractor to perform the services covered by this contract in exact accordance with the approved proposal as submitted. Contractor shall not add buses or routes except as authorized in writing in advance as provided for in this proposal. The Contractor shall be liable to the District for any damages arising as a result of a failure to fully comply with this obligation, and the Contractor shall not be excused with respect to any failure to so comply by any act or omission of the Burbank Unified School District, unless such act or omission actually prevents the Contractor from fully complying with the requirements of the documents, and unless the Contractor protests at the time of such alleged prevention that the act or omission is preventing the Contractor from fully complying with the contract documents. Such protest shall not be effective unless presented in writing to the District Office within one (1) working day of the date of occurrence of the act or omission preventing the Contractor from fully complying with the contract documents.

ARTICLE 2 - TERM OF CONTRACT

The term of this Agreement shall be from August 11, 2025, through June 30, 2028. The Agreement may be extended on a year-to-year basis upon mutual written consent of District and Contractor for an additional 2 more years (thus ending no later than June 30, 2030) in accordance with Education Code section 39803 (a).

ARTICLE 3 - CONTRACT PRICE

The District shall pay to the Contractor as full consideration for the faithful performance of the contract, subject to any additions or deductions as provided in the proposal documents, the amounts calculated at the rates set forth on the Proposal Form/Price Schedule.

Contractor will submit to District a monthly invoice for its services rendered during the prior month. District shall pay all undisputed amounts due to the Contractor within 30 calendar days of receipt of such invoice.

If any portion of the billed service in the invoice is disputed by District or the District seeks a revised invoice, District shall deliver written notice specifying the disputed amount or requested revisions to the Contractor. All disputes shall be resolved pursuant to the Dispute Resolution clause of this Agreement.

In the event that District fails to make a payment on any sums due hereunder, and such sums remain unpaid for 45 days, Contractor shall be entitled to charge interest on unpaid

amounts at the rate of the lesser of 1.5% per month or the maximum amount allowed by state law. In no event shall Contractor stop, delay, or otherwise change the services provided pursuant to this Agreement because of a disputed invoice or delayed payment. The terms of this Agreement shall remain in full force and effect during any disputed invoice proceedings and the Parties shall continue to meet their obligations set forth herein, including but not limited to, Contractor's obligation to provide continuing transportation services and the District's obligation to provide payment for all undisputed invoices. Contractor shall be entitled to court costs, litigation expenses and attorneys' fees incurred in any attempt to collect unpaid amounts due under this Agreement.

Any proposed extensions to this Agreement shall be negotiated in good faith by both parties. The District and Contractor agree to meet in December 2025 to review cost and performance to date. After such meeting, the District will determine whether to continue this contract past the 25-26 school year.

Transportation rates may be adjusted annually effective July 1 based on agreed upon contractor performance metrics and the Consumer Price Index (CPI-U) as of the preceding February. **In the event of a general price decrease the District reserves the right to revoke the bid award unless the decrease is passed on to the District.**

ARTICLE 4 – FORCE MAJEURE.

The Parties to this Agreement shall be excused from performance hereunder during the time and to the extent that it is prevented from performing in the customary manner by an act of God, fire, flood, war, riot, civil disturbance, terrorism, epidemic, quarantine, strike, cyber-attack, oil or fuel unavailability, loss of transportation facilities, commandeering of equipment , materials, products, plants, or facilities by the Government, or any other occurrence which is beyond the control of Contractor, when satisfactory evidence thereof is presented to the other Party. Labor problems of Contractor including but not limited to strikes shall not excuse performance.

ARTICLE 5 - HOLD HARMLESS AGREEMENT

The Contractor agrees to and does hereby indemnify and hold harmless the District, its officers, agents, and employees from and against every claim or demand made, and every liability, loss, damages, or expense, of any nature whatsoever, which may be incurred by reason of:

1. Death or bodily injury to persons, injury to, loss or theft of property, or any other loss, damage or expense sustained by the Contractor or any person, firm, or corporation employed by the Contractor upon or in connection with the services called for in this Agreement, except for injuries and losses resulting from the sole negligence or willful misconduct of the District, its officers, employees, agents or independent Contractors who are directly employed by the District; and,
2. Any injury to or death of persons or damage to property caused by an act, neglect, default, or omission of the Contractor, or any person, firm, or corporation employed by the Contractor, either directly or by independent contract, including all damages due to loss or theft, sustained by any person, firm or corporation, including the District, arising out of, or in any way connected with the services covered by this Agreement, whether said injury of damage occurs either on or off school district property, except for injuries and losses arising from the sole negligence or willful misconduct of the District, its officers, employees, agents or independent Contractors who are directly employed by the District.

3. The Contractor, at his own expense, cost, and risk, shall defend any and all actions, suits, or other proceedings that may be brought or instituted against the District, its officers, agents or employees, on any such claim, demand or liability, and shall pay or satisfy any judgment that may be rendered against the District, its officers, agents or employees in any action, suit or other proceedings as a result thereof.

ARTICLE 6 - PROVISIONS REQUIRED BY LAW

Each and every provision of law and clause required to be inserted in this Contract shall be deemed to be inserted herein and this Contract shall be read and enforced as though it were included herein, and if through mistake or otherwise any such provision is not inserted or is not inserted correctly, then upon application of either party the Contract shall forthwith be physically amended to make such insertion or correction.

ARTICLE 7 – INSURANCE

The Contractor shall secure and maintain, as a minimum, the insurance required under the Insurance Requirements form attached to the proposal package with insurance companies acceptable to the District to protect Contractor and any person, firm or corporation employed directly or indirectly by Contractor or in connection with the services required hereunder from claims which may arise from operations under the Agreement. Contractor shall further furnish to the District certificates of insurance, which shall name the District and the Board of Education as additional insureds. All policies required to be maintained by the Contractor shall contain a provision that coverages afforded under the policies shall not be canceled or modified without thirty (30) days written notice to and consent of the District. Failure to maintain insurance and furnish the required Certificates may be considered a breach of the Agreement by the Contractor and the District may terminate the Agreement without waiver of any remedy it may have.

ARTICLE 8 - TERMINATION

Notwithstanding anything to the contrary stated in this Agreement, the District may terminate this Agreement for convenience at any time upon ninety (90) days' prior written notice to the Contractor. Upon such termination, the District's total obligation to the Contractor shall be limited to the payment for all services already provided by the Contractor in accordance with this Agreement prior to the effective date of the termination.

1. This Agreement may be terminated by either party hereto should the other party fail substantially to perform in accordance with the terms hereof through no fault of the terminating party and such failure continues for 30 days after notice thereof is delivered by the non-defaulting party.

   In the event that the Agreement is terminated by the Contractor as a result of a failure to perform by the District under subsection (1) above, the Contractor shall be paid its compensation for services performed to the date of termination, including all termination expenses. Termination expenses shall include all those expenses arising prior to, during, and subsequent to the termination that are directly attributable to the termination.

In the event that the Agreement is terminated as a result of a failure to perform by Contractor pursuant to subsection (1) above, then the Contractor shall be paid its compensation for services performed to the date of termination but shall not be paid any termination expenses.

ARTICLE 9 - DISPUTE RESOLUTION

1. Negotiation. Any claim that Contractor may have regarding the performance of this Agreement, including, but not limited to, claims for

additional compensation, shall be submitted to the District within 30 days of its occurrence. The District and Contractor shall attempt to negotiate a resolution of such claim and process an amendment to this Agreement to implement the terms of such resolution.

2. Mediation/Arbitration. If a dispute arises out of or relates to this Agreement, or the breach thereof, and if said dispute cannot be settled through direct discussions, the parties agree to first endeavor to settle the dispute in an amicable manner by mediation under the applicable rules of the American Arbitration Association, before resorting to arbitration. Thereafter, any unresolved controversy or claim arising out of or relating to this Agreement, or breach thereof, shall be settled by arbitration in accordance with the applicable rules of the American Arbitration Association, and any judgment upon the Award rendered by the arbitrator(s) may be entered in Los Angeles County court having jurisdiction thereof.
3. Services Pending Outcome. Contractor agrees to proceed with all services ordered by the District pursuant to this Agreement pending the outcome of any claim, dispute, mediation, or arbitration. In accordance with the terms of this Agreement, the District agrees to pay for services ordered by it and properly rendered by the Contractor pursuant to this Agreement pending the outcome of any claim, dispute, mediation, or arbitration.
4. Additional Remedies. The rights and remedies of the parties provided under this Agreement are in addition to any other rights and remedies provided by law.

ARTICLE 10 - NO WAIVER

No waiver of a breach of any provision of this Agreement by the District shall constitute a waiver of any other breach of such provision. Failure of the District and Contractor to enforce at any time, or from time to time, any provision of this Agreement shall not be construed as a waiver thereof.

ARTICLE 11 - CONTRACTOR COVENANT

While performing the services and duties required hereunder, the Contractor agrees to comply with and observe all the provisions of the California Vehicle Code and all other applicable laws, and further agrees to comply with all rules and regulations established by the State Board of Education of California, the Department of Education of the State of California, and by the District relating to the safe transportation of pupils.

ARTICLE 12 - INDEPENDENT CONTRACTOR

It is expressly understood and agreed to by the parties that the Contractor, while engaged in carrying out and complying with any of the terms and conditions of this Agreement, is an independent Contractor and not an officer, agent, or employee of the District.

ARTICLE 13 – AUTHORITY

Each individual and entity executing this Agreement hereby represents and warrants that he, she or it has the capacity set forth on the signature pages hereof with full power and authority to bind the party on whose behalf he, she or it is executing this Agreement to the terms hereof.

ARTICLE 14 – ASSIGNMENT

Neither the District nor the Contractor shall assign, sublet or transfer any rights under or interest in this Agreement without the prior written consent of the other, except that, the

Contractor may assign and transfer this Agreement to an entity that it controls, is controlled by or is under common control with. As used herein, the term "transfer" shall include the transfer of more than 49% of the voting stock of a corporation or the transfer of more than 49% of the equity interest in a partnership, joint venture or similar entity.

ARTICLE 15 - EXTENT OF AGREEMENT

This Agreement, together with the remainder of the proposal package, constitutes the entire agreement between the parties and incorporates all prior agreements and understandings in connection with the subject matter hereof. This Agreement may be amended only in writing signed by the party against whom enforcement is sought. Nothing contained in this Agreement is intended to benefit any third party.

ARTICLE 16 – SEVERABILITY

If any portion of this Agreement is held as a matter of law to be unenforceable, the remainder of this Agreement shall be enforceable without such provision(s).

ARTICLE 17 - ATTORNEYS' FEES

If any action is brought by either party against the other party hereunder, the prevailing party shall be entitled to recover from the other party reasonable attorneys' fees, costs and expenses incurred in connection with the prosecution or defense of such action. For purposes of this Agreement, the term "attorneys' fees" or "attorneys' fees and costs" shall mean the fees and expenses of counsel to the parties hereto, which may include printing, Photostatting, duplicating and other expenses, air freight charges, and fees billed for law clerks, paralegals and other persons not admitted to the bar but performing services under the supervision of an attorney.

ARTICLE 18 – FAILURE OF CONTRACTOR TO PROVIDE SERVICE

It is agreed by the Contractor and the District that, from the nature of the services to be rendered, it is impractical and extremely difficult to fix the actual damage to the District through the failure of the Contractor to provide any of the services as specified herein, and therefore, Contractor shall be assessed sums as follows:

1. Early/Late Trips. Trips which are fifteen (15) minutes early or late to the destination as scheduled shall be subject to an assessment of liquidated damages in the amount of $50.00.
2. Failure to Report Standby Drivers. An assessment of $50.00 per day shall be made whenever Contractor fails to report that a standby driver is assigned to a route hereunder.
3. Failure to Provide Written Accident Reports. An assessment of $100.00 per day shall be made whenever Contractor fails to provide the District with a written accident report within three (3) working days after the accident.
4. Radios. An assessment of $100.00 per trip shall be made whenever a two-way radio is determined by the District to be inoperative.
5. Exclusivity. District reserves the right to schedule other transportation companies if, in the District's opinion, the selected contractor is not able to provide service.

District shall not assess liquidated damages during the first 30 days of the school year.

ARTICLE 19 – SERVICE LEVEL ADJUSTMENTS

1. Trigger for Renegotiation:

The District and Contractor will regularly consult regarding the District's

transportation requirements. If changes occur in the number of students requiring transportation, routes, or schedules, adjustments may be made to the number of vehicles and spare buses as needed. With notice to the Contractor, the District may modify service levels provided under this Agreement. However, if such changes exceed 20% of the assumed service levels, equipment requirements, routes, schedules, days of service, hours, miles, or vehicle needs outlined in the RFP, the Contractor may propose adjusted rates to reflect the direct impact on its cost structure. Any rate changes must be justified based on actual increases or decreases in operational costs resulting from the District's modifications.

2. School Closure/Schedule Change

    a. Inclement Weather (Total # of School Days Not Impacted):

    Whenever school is closed and in-person instruction is suspended for the day, for any reason, including, but not limited to, inclement weather, impassability of roads, facilities issues, or illness, District shall notify Contractor on each day of such closure in time for Contractor to suspend operations and provide sufficient notice to its workforce not to report to work. District shall compensate Contractor the full scheduled daily rate for days when District fails to provide such notice to Contractor; provided, however, this provision only applies to closures that do not decrease the total number of student transportation days.

    b. Early Dismissal/Late Start:

    If the regular school day schedule is changed resulting in late start, early dismissal or the cancellation of scheduled Charter Transportation, District shall notify Contractor in time for Contractor to adjust operations and adequately notify its workforce of the change. District shall compensate Contractor for all costs incurred due to failure to provide adequate notice. Notwithstanding the foregoing, in the event of circumstances which necessitate a schedule change, Contractor and District shall cooperate to facilitate orderly transportation of students in the most efficient manner possible under the circumstances presented.

ARTICLE 20 – NOTICES

All notices required by this Agreement or other communications to either party by the other shall be deemed given when made in writing and sent electronically using an established electronic document signing service, or deposited in the United States Mail, first class, postage prepaid, return receipt requested, addressed as follows:

To the District:

Burbank Unified School District
Chief Business Officer
1900 West Olive Avenue
Burbank, California 91506
andrewcantwell@burbankusd.org

To the Contractor:

First Student, Inc.
Lisa Serra
1370 Valley Vista Drive, Suite 225
Diamond Bar, CA 91765
Lisa.Serra@firstgroup.com

With a copy to:

First Student Inc.
Attn: General Counsel
191 Rosa Parks Street, 8th Floor
Cincinnati, OH 45202

ARTICLE 21 - COMPONENT PARTS OF THE CONTRACT

The Contract entered into by this Agreement consists of the following contract documents, all of which are component parts of the contract as if herein set out in full or attached hereto:

1. Invitation to Submit Proposals
2. Terms and Conditions
3. Proposal Questionnaire
4. Proposal Forms/Price Schedules
5. Certificate Regarding Worker's Compensation
6. Non-Collusion Affidavit
7. Insurance Requirements and Evidence of Insurance
8. School Bus Inventory and Property Summary
9. Addenda as issued
10. Agreement for Furnishing Pupil Transportation Service

All of the above-named contract documents are intended to be complementary. Work required by one of the above-named contract documents and not by others shall be done as if required by all.

IN WITNESS WHEREOF, this Agreement has been duly executed:

FIRST STUDENT, INC.	**BURBANK USD**
Signature	Oscar Macias (Sep 6, 2025 08:31:56 PDT) Signature
Kim Worster Name	Oscar Macias Name
Sr. Vice President Title	Interim Superintendent Title
9/4/25 Date	Sep 6, 2025 Date

Reviewed and Approved by District Counsel:

Signature	Sharon Ormond Name
Senior Partner, Atkinson, Andelson, et al. Title	Sep 4, 2025 Date

2425-030 Agreement-FINAL

Final Audit Report 2025-09-06

Created:	2025-09-04
By:	David Gerharter (DavidGerharter@burbankusd.org)
Status:	Signed
Transaction ID:	CBJCHBCAABAAC81xERO_bVUYUjLyj2sl2z-9URfVYi5S

"2425-030 Agreement-FINAL" History

Document created by David Gerharter (DavidGerharter@burbankusd.org)
2025-09-04 - 10:05:40 PM GMT- IP address: 209.129.86.50

Document emailed to Sharon Ormond (sormond@aalrr.com) for signature
2025-09-04 - 10:09:37 PM GMT

Email viewed by Sharon Ormond (sormond@aalrr.com)
2025-09-05 - 0:39:55 AM GMT- IP address: 174.67.238.179

Document e-signed by Sharon Ormond (sormond@aalrr.com)
Signature Date: 2025-09-05 - 0:41:25 AM GMT - Time Source: server- IP address: 174.67.238.179

Document emailed to Oscar Macias (oscarmacias@burbankusd.org) for signature
2025-09-05 - 0:41:26 AM GMT

Email viewed by Oscar Macias (oscarmacias@burbankusd.org)
2025-09-05 - 7:52:29 AM GMT- IP address: 146.75.146.1

Document e-signed by Oscar Macias (oscarmacias@burbankusd.org)
Signature Date: 2025-09-06 - 3:31:56 PM GMT - Time Source: server- IP address: 172.119.149.144

Agreement completed.
2025-09-06 - 3:31:56 PM GMT

FIRSTstudent

1ST AMENDMENT AND EXTENSION OF ALTERNATIVE TRANSPORTATION SERVICES BETWEEN BURBANK UNIFIED SCHOOL DISTRICT AND FIRST STUDENT, INC.

THIS AMENDMENT is made and entered into as of the day of April 7th , 2026 by and between Burbank Unified School District with principal offices at 1900 W. Olive Ave., Burbank, CA 91506 ("District") and First Student, Inc. with its national headquarters at 191 Rosa Parks Street, 8th Floor, Cincinnati, OH 45202 (each a "Party" and collectively, the "Parties).

WHEREAS, the Parties entered into that certain Agreement for Furnishing Pupil Transportation Services dated 19th of August 2025, as amended (hereinafter the "Agreement"); and

WHEREAS, the Parties desire to amend certain portions of the Agreement.

NOW, THEREFORE, the parties mutually agree as follows:

1. **TERM**
The term of the Agreement shall extend for one (1) additional year commencing July 1st, 2026, and continuing through June 30, 2027; thereafter this agreement may be extended on a year-to-year basis by mutual agreement of the parties.

2. **COMPENSATION**
Commencing July 1st, 2026, the rates of compensation payable hereunder during the ensuing Contract Year shall be set forth in Exhibit "A" and are based on current number of routes.

3. **NOTICE TO PARTIES**
All notices to be given by the parties to this Agreement shall be in writing and serviced by depositing same in the United States Mail, certified mail or by electronic mail (email) if email address if the email address is provided below:

Notices to District shall be addressed to:

Peter Knapik
1900 W. Olive Ave.
Burbank, CA 91506

Notices to CONTRACTOR shall be addressed to:

First Student, Inc
2103 S. El Camino Real, Ste. 104B
Oceanside, CA 92054
Gregg.prettyman@firstgroup.com

With a copy to (via US Mail only):

General Counsel
First Student, Inc.
191 Rosa Parks Street
8th Floor
Cincinnati, OH 45202

Except as amended herein, all other terms and conditions of the Agreement shall remain in full force and effect.

IN WITNESS WHEREOF, this Agreement has been signed and executed in duplicate on behalf of the parties hereto by persons duly authorized on the day and year first written above.

First Student, Inc.		Burbank Unified School District	
By:	Gregg Prettyman	By:	
Title:	SVP, FirstAlt	Title:	
Signature:		Signature:	
Date:		Date:	

FIRSTstudent

Exhibit A. Pricing Overview

The pricing matrix includes the associated fees for the following vehicle types:

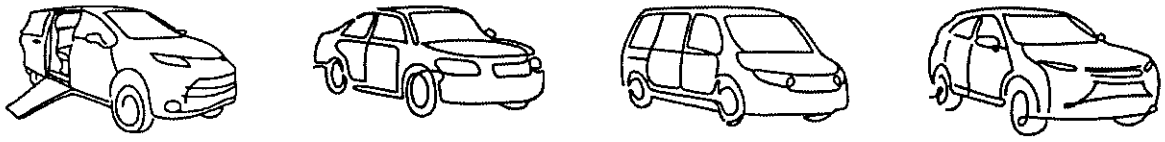

PROPOSED PRICING	
BASE TRIP ELEMENTS	**CHARGE**
Trip Minimum	$70.04
Mileage Included in Trip Minimum	8 miles
Cost Per Mile > Miles Included	$2.59
ADDITIONAL TRIP ELEMENTS – AS NEEDED	**CHARGE**
Equipment Service Fee (Car Seat, Booster, Safety Vest, Buckle Guard, Etc.)	$5.08
Camera Fee (With District approval)	$2.50
Wheelchair Service Fee	$50.75
Monitor Fee (Per hour, 2-hour minimum)	$30.45
District Approved Wait Time (Per hour, billed in 15-minute increments)	$60.90
Hard to Service Trips (With District approval)	TBD
Late Cancel (Less than two hours prior to scheduled pick-up time)	Full Price of Trip
No-Show (100% of the students on a trip are not present)	Full Price of Trip

TRIP ELEMENTS AND PRICING DEFINITIONS

All pricing is applied per one-way trip and not per student. The trip minimum also includes as many students as can be routed into the vehicle. Most vehicles carry one to four students.

As additional students are added to existing routes there is no additional charge other than any additional mileage over the included mileage or needed equipment. Vehicle type and capacity are determined by student requirements and vehicle availability.

The district will only be charged for miles incurred while a student or monitor is on board the vehicle. When no student or monitor is on board the vehicle, no mileage charges will be assessed.

Trip Charges

One-way transportation from home-to-school (inbound trip) or school-to-home (outbound trip) with a student or monitor continually on board. A trip is a collection of students combined into one vehicle with all pick up/drop off and other needs accounted for. Customers are billed on a per trip basis. A trip may contain any of the following: a single student, multiple students, monitor, special equipment. Billable elements of a trip may include - a trip minimum fee, trip mileage, monitor, equipment, and any other applicable considerations. The total number of trips a district is charged for is determined by adding together each of the one-way trips.

Trip Minimum

The minimum charge for any trip regardless of miles, equipment, etc.

Mileage Charges

The district will only be charged for miles incurred while a student or monitor is on board the vehicle. When no student or monitor is on board the vehicle, no mileage charges will be incurred. Mileage charges are calculated on driving distance through a third-party provider such as Google or MapQuest. We determine the mileage based on the most efficient route for the district and students. The total mileage is rounded up to the next whole mile. All mileage will be calculated based on approved student and school addresses provided by the district. When monitors are riding on the vehicle the mileage rate will continue until the monitor is returned to their point of origin.

Miles Included

The number of miles included in the trip minimum. If additional students are added to a trip and the miles remain under the "miles included" number, no additional charge will be incurred.

Wheelchair Vehicle

An additional cost is charged when a wheelchair vehicle is required, the cost is applied per wheelchair.

Student Equipment

Per student/per trip cost for students requiring additional equipment such as a car seat, safety vest, etc.

Monitor

If the district provides the monitor, there is no additional monitor charge, other than any additional mileage that might be added to the trip. A monitor charge (per trip) will be applied for any monitor supplied by FirstAlt, in addition to any added mileage to the trip.

Standard Wait Time

Drivers will wait three minutes past the regular scheduled pick-up time if students are not ready for pick-up at the scheduled pick-up time. If the students are still not ready after the three minutes of wait time, the student will be marked as a no-show and the driver will move on to their next scheduled stop.

When returning home, if the parents or responsible party are not available to receive the student, we will contact the responsible party by phone for further instructions. If they are unavailable, we will contact the school district for instructions. If we are directed to return the student to school or are unable to reach either party, we will return the student to a school district representative at the student's school.

If we contact the school district and are advised to wait onsite, we will then bill according to the school district's approved wait time.

District Approved Wait Time

Wait time will only be charged upon the district's request and/or approval. Wait time will be billed per hour, in 15-minute increments. Wait time is utilized when a district requests a driver to wait at the home or school beyond the scheduled pick-up/drop-off time.

No-Shows and Late Cancels

Late Cancel

A late cancel charge is incurred when FirstAlt has been notified of a trip cancellation less than two hours prior to the scheduled pick-up time.

No-Shows

A no-show is incurred once the driver has arrived at the pick-up location within the scheduled pick-up window and having waited the designated time to pick-up the student, no student is present. A trip is marked as a no-show when 100% of the students on a trip are not present. All trips will remain active unless the district indicates otherwise.

Travel Time

Per most school district and state standards, the expected travel time for students we are transporting will not exceed one hour for each one-way trip unless approved by the school district. However, we fully understand some children may live quite a distance from school, have adverse weather, traffic or other unusual conditions, and therefore will need more than one hour of travel time.

ADDING AND REMOVING STUDENTS

We recognize that a district's student transportation needs are constantly changing. Examples include new students needing transportation, students moving out of the district or to a new address within the district, students no longer needing transportation, etc. When it becomes necessary to make changes to a previously routed trip, FirstAlt will provide the district with the updated details including the updated cost of trip, the new order of student pick-ups and the updated pick-up times. FirstAlt will then await district approval of the cost impact before proceeding.

New student transportation requests or changes to existing trips often take up to two (2) business days, and at times may take up to three (3) business days to implement. If FirstAlt staff believes the requested addition or change could take more than three (3) business days, we will communicate with the school district to determine a reasonable amount of time.

STUDENT CANCELLATIONS

There are two types of student cancellations, temporary and permanent.

Temporary Student Cancellation

If a student is sick or will not be attending school temporarily (5 days or less), the parent or district can reach out to FirstAlt directly to make this request. If a student is a single rider and is temporarily cancelled there will be no trip charge. If the student is part of a multiple rider trip, the district will be charged the normal trip rate.

Permanent Student Cancellation

The permanent cancellation of a student from a trip requires district notification and approval. If the student is a single rider, then the trip will be permanently cancelled, and no additional costs will be incurred by the district. If the student is part of a multi-rider trip, FirstAlt will consolidate the route, remove any mileage or equipment charges associated with the cancelled student and provide the district with the updated trip and cost information.

HARD TO SERVICE TRIPS

If a particular trip is determined to be "hard to service," FirstAlt will work closely with the district to determine the best method to service these trips and what additional costs will be needed to assist drivers in servicing these trips. Examples might include students that urinate or vomit on a regular basis during the trip, trips that are in remote service areas, etc. The purpose of this additional pricing is to provide FirstAlt and the district with a method and approach to service trips that include exceedingly challenging circumstances.

AMENDMENT OF RATES

Rates for services provided under this agreement shall be adjusted at an increased rate of 3% each year.

FUEL SURCHARGES

When the average fuel price exceeds $5.00 per gallon, the mileage rate will be increased by calculating 50% of the fuel price that exceeds $5.00 and adding it to the base mileage rate. Thus, if the price of fuel, according to the average fuel price index, is $5.60, the increase would be 50% of the 60 cents or 30 cents. Such surcharges apply for the miles included in the ride base price. The fuel price index to be used shall be found under the category of "[Your Specific State or Region] U.S. and an Average Fuel Prices (dollars per gallon) to be calculated from the following website: https://www.eia.gov/dnav/pet/pet_pri_gnd_dcus_sca_w.htm

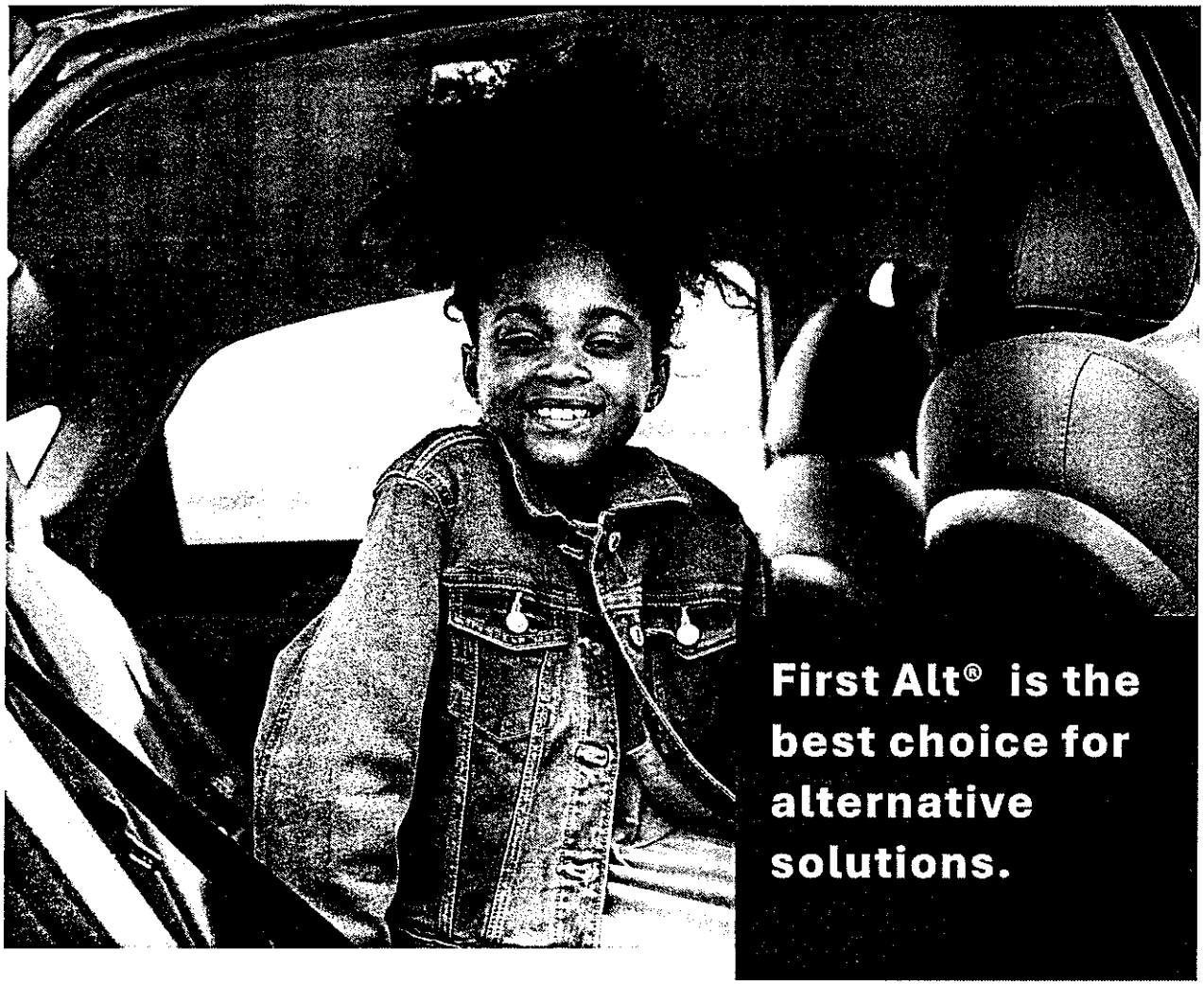

First Alt® is a division of First Student, responsible for providing school districts with a safe and reliable alternative vehicle transportation option for students with special needs, students experiencing homelessness, out-of-district students, and hard-to-serve trips. Utilizing a fleet of small-capacity vehicles from qualified local transportation companies that are expertly operated and maintained, First Alt® gives school districts flexibility in their everchanging transportation program, therefore, reducing costs and freeing up resources for higher capacity trips.

In partnership with school districts, the leadership team at First Alt® thoroughly analyzes each school district's transportation program and creates the most efficient, cost-effective routes. Once routes are reviewed and finalized, First Alt® identifies qualified, local transportation providers and coordinates services using unmatched proprietary compliance, routing, and dispatching software. Before each student is transported, First Alt® guarantees routes have been reviewed, parents/guardians and school staff have been notified, and each driver has been fully vetted and trained. While students are being transported, First Alt® trip guardians will closely monitor each trip to ensure safe and timely rides to and from school and promise that if there are any delays or issues all parties will be notified quickly.

We have more experience in student transportation, and we are powered by First Student, the trusted national leader in pupil transportation. First Alt® operates with strict safety standards, has the most efficient routing techniques, and provides various types of services. First Alt® makes sure all students get to school safely and on time using the right-sized vehicle. So, whether you need a transportation solution for inefficient routing, or for students who do not fit on a bus because of location or need, First Alt® has you covered.

Who is Driving Your Students?

First Alt® partners with qualified, local transportation companies utilizing a fleet of drivers and vehicles – a mix of sedans, SUVs, minivans, and wheelchair vans – that meet all First Student and school district standards. Before transporting any students, companies and their drivers must upload compliance documentation and complete First Alt® student transportation training. First Alt® confidently confirms that all transportation providers, drivers and vehicles meet or exceed all First Alt® , state, local, and school district transportation requirements before transporting students.

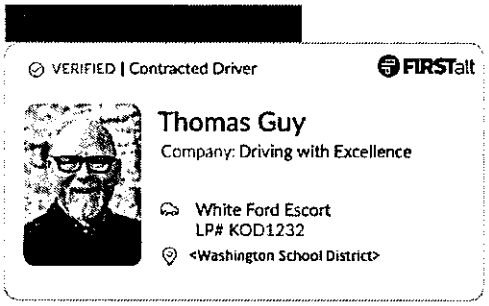

DIGITAL DRIVER ID

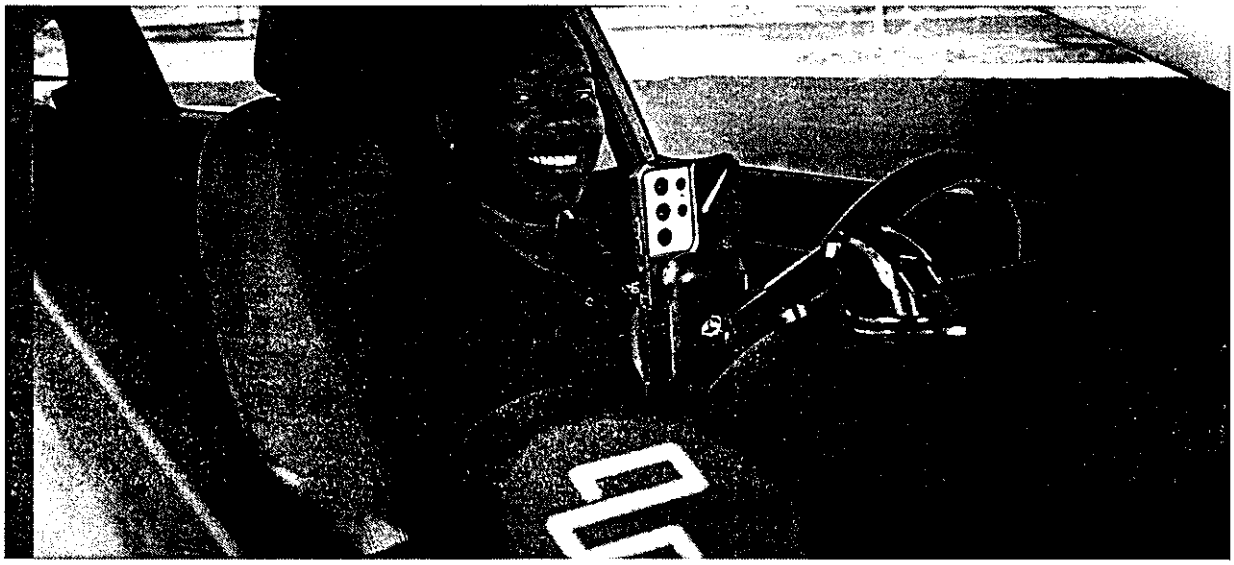

First Alt® 's industry-first digital driver ID allows parents and school staff to see real-time verification of the driver's eligibility to service their student. The digital driver ID provides up-to-the-minute validation that the driver has been fully vetted and assigned to the specific student and trip. Parents/caretakers and staff can ask to view this digital ID before loading their students.

All contracted drivers and vehicles will also carry easy-to-identify badges and vehicle stickers allowing staff and parents to quickly identify the vehicle and driver. The First Alt® vehicle sticker will be visible on the passenger side windshield and drivers will have badges that will be easy to spot from a distance for staff and parents.



Driver Vetting

Prior to providing services, all vehicle operators must have a valid driver's license, successfully complete all required pre-service training, submit to the required background and/or fingerprinting checks, demonstrate physical and mental capabilities required to carry out all assigned responsibilities and be enrolled in a drug and alcohol testing consortium that provides for pre-employment testing as well as random, reasonable suspicion and post-accident drug and alcohol testing.

Driver Onboarding

After fulfilling the requirements above, all drivers must complete the required vehicle inspections, school district or local requirements such as physicals or TB tests as required and industry-leading First Alt® driver training that's specifically designed for drivers providing student transportation in smaller capacity vehicles.

Driver Qualifications

First Alt® 's screening process for our subcontracted drivers is summarized in the following steps:

Initial Review

- Must be 21 years of age or older unless otherwise specified by contract
- Must possess a valid driver's license in the state or province of residency
- Must provide an updated photo for driver ID

Background & Motor Vehicle Records Checks

Initial & Ongoing Motor Vehicle Record Checks:

- No more than three moving violations or three minor accidents in past three years
- Must have three years of licensed driving experience
- We also examine Motor Vehicle Records (MVRs) for any pattern of unsafe driving behaviors exhibited by a continual accumulation of minor infractions

Initial & Ongoing Criminal Records Checks:

- Applicant's entire conviction history is viewed holistically
- DUI/DWI convictions may disqualify applicants from employment

Drug & Alcohol Testing

In addition to a pre-service drug screen, drivers are entered into a quarterly random drug testing pool and will also be tested upon reasonable suspicion or accidents. Drivers with a positive result or refusal of pre- or post-engagement, random, post-accident or reasonable suspicion drug/alcohol test, will be disqualified.

State, Local, & Client Required Checks

First Alt® knows that the safety of students is the number one priority. First Alt® confirms that all transportation providers and their drivers have met all First Alt® , state, local and school district requirements before transporting students. All drivers are fully SB-88 complaint and held to the highest safety standards.

Driver Onboarding

After fulfilling the requirements above, all drivers must complete the required vehicle inspections, school district or local requirements such as physicals or TB tests as required and industry-leading First Alt® driver training that's specifically designed for drivers providing student transportation in smaller capacity vehicles.

Driver Training

First Alt® driver training is a multi-module training for student transportation drivers in smaller capacity vehicles designed by industry experts providing a set of guidelines, best practices and tools. The First Alt® driver training program which includes insights from behavioral experts and testing, is readily available on the First Alt® Driver App and must be completed before transporting students.

Driver Trainer Curriculum

- Commitment to Safety
- Contractor Conduct Guidelines
- Pre and Post Trip Vehicle Check
- Student Loading & Unloading
- Passenger Seatbelt Usage
- Transporting Students Who Utilize Specialized Equipment
- Unattended Children
- Unauthorized Stops
- Unauthorized Passengers
- Inclement Weather & Emergency Events
- Child Search Procedure
- Student Confidentiality and Privacy (FERPA)
- Safety Best Practices
- Adverse Conditions
- Distracted Driving
- Preventing Harassment
- Preparing Students to Learn
- Special Needs
- Transportation Challenges

After completing the driver training program, drivers will be equipped with tools for understanding the functions of behavior and the Rage Cycle which will help drivers relate to the students and to de-escalate issues as they arise. In addition, parents and caregivers will be asked to fill out an "All About Me" form for their student to provide the drivers a better understanding of the student's likes, dislikes and items needed to make the student comfortable giving each student the personalized care that they deserve. Once a driver is fully vetted and has passed all training requirements, they are prepared to handle everything — from behavioral challenges to installing and using special needs equipment.

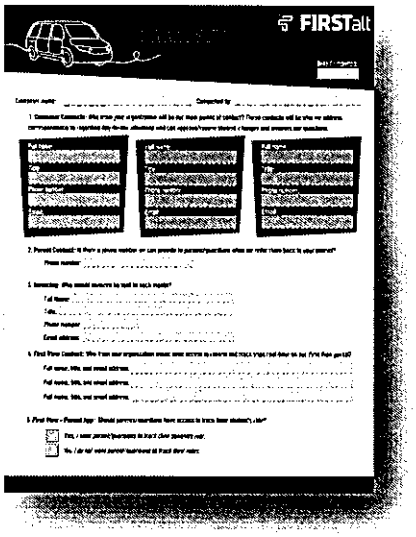

Substitutes

A bench of vetted and trained substitute drivers will be ready to rescue a trip. This bench is determined by collaborating with the district and their needs. Our dedicated Trip Guardians (dispatch team) quickly identifies substitute drivers to ensure students arrive safely and on time. Our Trip Guardian Tool shows real-time trip data in dashboard alerts to any trips running late, substitute drivers needed, and each driver and student's status.

Vehicles

In order to ensure the safest possible service for your students, all vehicles will have pre-service and ongoing inspections and maintenance, GPS tracking and onboarding requirements.

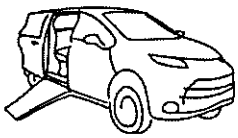
WHEELCHAIR VAN


SEDAN

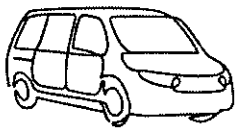
MINIVAN

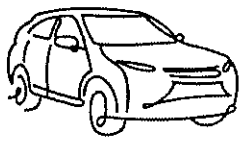
SUV

Equipment Requirements

First Alt® driver training is a multi-module training for student transportation drivers in smaller capacity vehicles designed by industry experts providing a set of guidelines, best practices and tools. The First Alt® driver training program which includes insights from behavioral experts and testing, is readily available on the First Alt® Driver App and must be completed before transporting students.

Vehicle Requirements

First Alt® Vehicle Verification

First Alt® staff check each vehicle to ensure it meets First Alt® and school district safety and cleanliness standards.

Valid Vehicle Registration and Insurance

Each vehicle must be properly registered and insured according to the contract.

Mechanic Vehicle Inspection

All vehicles must pass a certified mechanic pre-service inspection in order to operate.

10 Years Old or Newer Unless Approved by Burbank Unified School District

All vehicles must pass a certified mechanic pre-service inspection in order to operate.

Only Approved Vehicle Types

Certain vehicle types are not permissible for student transportation and will therefore not be approved by First Alt® .

Any State or Local Vehicle or Vehicle Equipment Requirements

Certain states and/or school districts may have requirements outside of the items mentioned above. When finalizing an agreement and before providing service, First Alt® will research and discuss all vehicle requirements with your school district.

FIRSTstudent

BURBANK UNIFIED SCHOOL DISTRICT
HOME TO SCHOOL TRANSPORTATION SERVICE

School Year	2025-26	2026-27
Rate increase		3.02%
Description		
01 -20	$762.76	$785.77
Excess Hour (Above 4.0 hour)	$111.32	$114.68
01 - 20 WC	$805.13	$829.42
Excess Hour (Above 4.0 hour)	$111.32	$114.68
Monitor	$211.69	$218.08
Excess Hour (Above 4.0 hour)	$52.92	$54.52
Extracurricular		
55-72 PAX		
3-Hr Minimum	$731.74	$753.82
4-Hr Minimum	$824.82	$849.70
Excess Hour	$160.99	$165.85

* Rates Based on Monday-Friday, Non-Holiday Regular Rates

Anita Chou	5/2/2026
Prepared By	Date
Lisa Serra	5/2/2026
Reviewed By	Date
Customer Signature	Date

Burbank Unified School
District Special Education
Department

REPORT TO THE BOARD

TO:	Members of the Board of Education
FROM:	Peter Knapik, Assistant Superintendent of Educational Services
PREPARED BY:	Jennifer Nicholson, Director of Special Education and Psychological Services
SUBMITTED BY:	Sandra Shearer, Administrative Secretary II
DATE:	June 25, 2026
SUBJECT:	Approval of Agreement for Professional Services Provided by LRA Interpreters, Inc. (Special Education)

Background:

The Board of Education is being asked to approve an agreement for professional services to provide interpreting and translation services for Special Education students, pursuant to California Education Code (Sections 17604 and 35163), as presented in the Confidential Exhibit.

Discussion/Issues:

The District is currently obligated to provide services for students who are Burbank residents whose IEPs require such services. If the District does not have qualified staff to perform specific services, it is obligated to contract outside the District for such services.

Fiscal Impact:

Not to exceed $200,000

Recommendation:

Peter Knapik, Assistant Superintendent of Educational Services, recommends that the Board of Education approve an agreement between the Burbank Unified School District and LRA Interpreters, Inc., to provide interpreting and translation services for Special Education students, not to exceed $200,000 (01.0-65000.0-57602-11901-5850-7440000), effective July 1, 2026 through June 30, 2027, and that authority to sign the agreement be exercised pursuant to BUSD-AR 3314, as presented.

Burbank Unified School District
1900 West Olive Avenue, Burbank, 91506
Tel: (818) 729-4473
Fax: (818) 729-4573
www.burbankusd.org

TERMS OF AGREEMENT

This Agreement, made and entered into this 8th day of June 2026 by and between the **Burbank Unified School District,** hereinafter referred to as "District", and LRA Interpreters, Inc. hereinafter referred to as "Provider."

Payee's Name: LRA Interpreters, Inc. Daytime Phone Number: 818-861-7844

Mailing Address: 1608 W. Magnolia Blvd., Burbank, CA 91506 Email Address: org@lrausa.com

Sponsoring Administrator: Peter Knapik (Print Name) Assistant Superintendent (Title) _____ (Signature) Special Education (Location)

Board Approval: 06/25/2026 Account Code: 01.0-65000.0-57602-11901-5850-7440000

The District is authorized pursuant to Education Code section 35160 and Government Code Section 53060 to contract for the services of Providers.

WHEREAS, the Provider is especially trained, experienced and competent to provide such services;

WHEREAS, in consideration of the mutual promises of the parties, hereto, the District hereby retains the Provider upon the terms and conditions hereinafter set forth, and the Provider hereby accepts said retention and agrees to perform the services hereinafter mentioned, upon said terms and conditions;

The parties mutually agree as follows:

1. The Provider agrees to perform the following services for the District, at a rate not to exceed $200,000 **Amount to include speaking fee, mileage and any additional fees.

2. The term of the Agreement shall be the period commencing on: 07/01/2026 and terminating on: 06/30/2027.

3. Payment Terms: Net 45 Days

4. In no case should initial payment claim submission or initial rebillings/retroactive billing for any fiscal year (July through June) extend beyond **sixty (60) days after the close of the fiscal year.** Invoices received for a closed fiscal year beyond the sixty (60) day period will be returned unpaid and should be removed from the Providers accounts receivable. Exceptions to the above must be requested in writing and approved by the Special Education Administrator.

5. District desires to enter into an Agreement in which LRA Interpreters, Inc. will provide interpreters/translators for special education students. Pursuant to LRA's 2026-2027 interpreting and translating fee schedule.

6. Provider shall provide a clear and concise invoice noting the time spent in providing the services and preparing the products required by this Agreement. Provider will be paid at the conclusion of this contract unless otherwise stated in the payment terms above.

7. It is expressly understood and agreed to by both parties hereto that the Provider, while engaged in carrying out and complying with any of the terms and conditions of this contract, is an independent contractor and is not an officer, agent or employee of the aforesaid District.

8. ~~Provider shall comply with the requirements of California Education Code sections 44237, 35021.1, 35021~~.2, and ~~56366.1 including, but not limited to: obtaining clearance from the California Department of Justice (here~~inafter

~~referred to as "CDOJ") for Provider's employees, volunteers, subProviders, related outside agency service Provider's staff or any person with regular student contact employed directly or indirectly by it prior to service with any Burbank Unified School District (BUSD) student. Provider hereby agrees that Provider's employees, volunteers, subProviders or any person employed directly or indirectly (such as Department of Probation, Department of Children and Family Services, and/or Los Angeles Department of Children's Services) by it shall not come in contact with BUSD students, in person or virtually, until CDOJ clearance is ascertained. Provider shall certify in writing to BUSD that none of its employees, and volunteers, subProviders or any person employed directly or indirectly by it who may come into contact with BUSD students have been convicted of a violent or serious felony as these terms are defined in California Education Code section 44237(h), unless despite the employee's conviction of a violent or serious felony, he or she has met the criteria to be eligible for employment pursuant to California Education Code section 44237 (i) or (j). Provider shall certify to BUSD that they have successful background checks and enrolled in subsequent arrest notification service for all employees who may come into contact with students. In addition, Provider shall make a request for subsequent arrest service from the CDOJ as required by California Penal Code section 11105.2.~~

~~Notwithstanding the restrictions on sharing and destroying criminal background check information, Provider, upon demand, shall make available to evidence of a successful criminal background check clearance and enrollment in subsequent arrest notice service, as provided, for each owner, operator, and employee of the nonpublic, nonsectarian school or agency. Provider is required to retain the evidence, as specified, for all staff, including those licensed or credentialed by another state agency. Background clearances and proof of subsequent arrest notification service as required by California Penal Code section 11105.2 for all staff shall be provided upon request.~~

9. Provider shall comply with the requirements of California Education Code sections 35021 *et. seq.* and 49406 regarding the examination of Provider's employees and volunteers for tuberculosis. Provider shall ensure and provide upon request to BUSD documentation for each individual volunteering, employed, contracted, and/or otherwise hired by Provider of such compliance before an individual comes in contact with a BUSD student.

10. Provider shall comply with ~~OSHA Blood Borne Pathogens Standards, 29 Code of Federal Regulations section 1910.1030, when providing medical treatment or assistance to a BUSD student. Provider further agrees to provide~~ annual training regarding universal health care precautions and to post required notices in areas designated in the ~~California Health and Safety Code~~.

11. Provider agrees to defend, indemnify, save, and hold harmless the District, its governing body, the individual members thereof, and all officers, agents and employees of the District from all loss, cost, and expense arising out of any liability or claim of liability for injury, damage, or loss sustained or claimed to have been sustained arising out of, or occurring as a result of Provider's performance or failure to perform services under this Agreement.

12. This agreement may be terminated at any time based upon the mutual agreement of the parties hereto. This agreement may also be terminated immediately by the District should the Provider breach this agreement or fail to perform the required services in a satisfactory manner.

13. Provider agrees to pay all Federal, State and Local taxes, and fees that are owed as a result of payments made to Provider pursuant to this agreement. Provider agrees to indemnify and hold harmless the District from any and all costs, loss, or liability whatsoever arising from or caused by any challenge to the payments made to Provider pursuant to this agreement, including but not limited to any liabilities or penalties assessed or levied by any and all local, state, or federal taxing authorities against the District.

14. Provider agrees to ensure that they do not exceed the applicable earnings limitation under CALPERS or STRS and agrees to be solely responsible for any actions taken by CALPERS or STRS as a result of exceeding the applicable earnings limitation.

15. District and Provider will communicate and send in writing all information received by the District regarding any work-related injury to Personnel within twenty-four hours of the injury.

16. Communicate within twenty-four hours to LRA Interpreters, Inc. the details of any incident, which may result in a complaint against any Personnel regarding professional services given by the Personnel.

17. The District agrees to indemnify, defend and hold harmless LRA Interpreters, Inc. from any and all negligence and all liabilities, claims, losses, costs, damages and expenses resulting or arising from or connected with the services rendered by the District, its agents, independent contractors, employees or servants pursuant to this contract.

18. This Agreement shall constitute the entire Agreement between the parties and any prior understanding or representation of any kind preceding the date of this Agreement shall not be binding upon either party except to the extent incorporated in this Agreement.

19. It is mutually agreed that both parties shall not discriminate against any individual in the performance of their obligations under this Agreement, on the basis of race, color, religion, national origin, sex, age or disability. Both parties further certify compliance with the applicable provisions of the Civil Rights Act of 1964, the Rehabilitation Act of 1973, and the Americans with Disabilities Act and State anti-discrimination laws.

INDEMNIFICATION

LRA Interpreters, Inc. shall save and hold the District harmless from and against and shall indemnify District for any liability, loss, cost, expense or damage whatsoever caused by reason of any injury sustained by any person or to property by reason of any act, neglect, default or omission of LRA Interpreters, Inc. or any of its agents, subcontractors, employees or other representatives. If District is sued in any court for damages by reason of any of the acts of LRA Interpreters, Inc., its agents, subcontractors, employees or other representatives referred to in this Agreement, LRA Interpreters, Inc. shall defend said action (or cause same to be defended) as its own expense and shall pay any discharge and judgment that may be rendered in any such action. If LRA Interpreters, Inc. fails or neglects to so defend said action, District may defend the same and any expenses, including reasonable Attorney fees, which District may pay or incur in defending said action and the amount of any judgment which District may be required to pay shall be promptly reimbursed by LRA Interpreters, Inc. demand.

District shall save and hold LRA Interpreters, Inc., harmless from and against and shall indemnify LRA Interpreters, Inc. for any liability, loss, cost, expense or damage whatsoever caused by reason of any injury sustained by any person or to property by reason of any act, neglect, default or omission of District, or any of its agents, subcontractors, employees or other representatives. If LRA Interpreters, Inc. is sued in any court for damages by reason of any of the acts of the District, its agents, subcontractors, employees or other representatives referred to in this Agreement, District shall defend said action (or cause same to be defended) as its own expense and shall pay any discharge and judgment that may be rendered in any such action. If District fails or neglects to so defend said action, LRA Interpreters, Inc. may defend the same and any expenses, including reasonable attorney's fees, which LRA Interpreters, Inc. may pay or incur in defending said action and the amount of any judgment which LRA Interpreters, Inc. may be required to pay shall be promptly reimbursed by District upon demand.

ARBITRATION

Any controversy or claim arising out of or relating to this Agreement, or the performance or breach thereof, shall be settled by means of binding arbitration in accordance with the rules of the American Arbitration Association, at Los Angeles, California.

If either party to this Agreement institutes any legal action or proceeding against the other party to the Agreement arising out of the Agreement, the prevailing party shall be entitled to recover its reasonable attorney's fees and costs from the non-prevailing party.

ACKNOWLEDGED AND AGREED TO

District:

Burbank Unified School District
District/Company Name

Jennifer Nicholson
Print Representative Name

Director of Special Education
Title

Signature

Date

ACKNOWLEDGED AND AGREED TO

Provider:

LRA Interpreters, Inc.
Provider/Company

Nicole Plocher
Print Representative Name

Chief Financial Officer
Title

Signature

June 9, 2026
Date

TRANSLATION *(written service)* FEE SCHEDULE

APPLICATION: CONTRACTS OR PURCHASE ORDERS PLACED BY INSTITUTIONS FOR TRANSLATION SERVICES TO BE RENDERED DURING FISCAL YEAR 2026-2027.

GENERAL NOTES

This fee schedule is issued for use by School Districts, Institutions of Higher Education, County Offices of Education, California Regional Centers, State, County and Municipal Institutions, Non-Profit Public Organizations and other institutions of similar structure, scope and purpose. This fee schedule is not to be used for public distribution nor for general publication.

The terms and conditions herein govern and supersede all previous versions of the terms and conditions for LRA Interpreters Inc., and their corresponding fiscal period.
All translation projects are delivered in digital copy form via email at no additional costs, unless specific instructions to have a printed version are received by LRA Interpreters Inc. at time of project request.

All translation fee rates are quoted in cents per source word. A source word is a word of the original document (English language) that is to be translated into another language.

Our fee rates include translation and proofing.

LRA INTERPRETERS translates all languages written in CALIFORNIA.

STANDARD TRANSLATION *(written service)* FEE SCHEDULE.

LANGUAGE	CENTS	LANGUAGE	CENTS	LANGUAGE	CENTS
Amharic	34	Hebrew	25	Russian	25
Arabic	28	Indonesian	23		
Armenian	23	Italian	23	Spanish	22
Bengali	21	Japanese	33	Tagalog	25
Khmer/Cambodian	28	Korean	24	Thai	29
Chinese	26	Mongolian	25	Turkish	25
Farsi	21	Pashto	28	Ukrainian	25
French	22	Polish	25	Urdu	25
Greek	25	Portuguese	22	Vietnamese	23
Gujarati	28	Punjabi	21	Hindi	25

CALL US ABOUT ANY LANGUAGE NOT LISTED IN OUR FEE SCHEDULE

About word counting.
A word is defined as a grouping made of any number(s), character(s) and symbol(s). Groupings are separated by a space, period, comma, colon, semicolon, hyphen, slash or apostrophe.

A translation price estimate will be quoted at no charge when requested.

Translation fees quoted apply to:

-Common alphabets.
-Straight translation only.
-Non-technical and non-specialized fields and subjects.

-Text typed in single column with double or single line spacing.

MINIMUM CHARGE :	Per order, for non-Spanish language	$105.00
	Per order, for Spanish language	$95.00

OTHER SERVICES

Separate proofing, editing, graphic paste up, project coordination, changes in scope of work, special preparatory work requirement..... $75.00/hour

STANDARD TURNAROUND TIME ESTIMATE.

The standard turnaround time estimates quoted are applicable to a single translation job with straight translation of most common languages, covering non-specialized fields, with a legible source document, and very clear instructions to the translators provided by the client and where no preparation of source document is required by LRA other than the counting of words.

Up to 7,500 words output.....Up to 10 full working days

Turnaround time for larger projects will be quoted on request. A shorter than usual turnaround time (*rush order*) request may result in a rush fee.

The turnaround period starts on the business day following the day of order receipt by LRA, when the source text is complete, typewritten and readable with complete instructions for its execution. The turnaround time ends with the availability of the executed translation into the target language at our office ready for delivery to the requestor.

RUSH ORDERS (fee)

A 50% fee increase applies to orders demanding a rush turnaround time.

OTHER PRODUCTION COSTS

A. Additional Copies
   - i. digital.....No cost
   - ii. paper .....15% of project (each)

B. Binding.....15% of project plus binding cost
C. U.S. Mail delivery.....US Postage charge
D. Messenger service.....At cost

CANCELLATIONS: Cancellations of ordered jobs already in progress shall be billed for work already completed, including preliminary and preparation tasks. Billing rates shall be applied per this fee schedule.

LRA's BUSINESS HOURS: Monday through Friday from 8:30 AM to 5:00 PM. Legal holidays and weekends are excluded. In case of an emergency, call LRA's office and follow the instructions of the phone message. A live person will call you back thereafter.

LIMITATION OF LIABILITY: LRA Interpreters, Inc.'s liability, if any, whether arising from breach of warranty, contract, negligence, indemnity, strict liability or other tort, or otherwise with respect to its services is limited to an amount not to exceed the price of the particular services giving rise to the liability. In no event shall LRA Interpreters be liable for any indirect, incidental, lost profits, consequential or special damages.

LRA has provided interpreting and translation services continuously since 1990.

*****

SOUTHERN CALIFORNIA INTERPRETING *(oral/not written service)* FEE SCHEDULE

APPLICATION: CONTRACTS OR PURCHASE ORDERS PLACED BY INSTITUTIONS FOR INTERPRETING SERVICES TO BE RENDERED IN MOST SOUTHERN CALIFORNIA METROPOLITAN LOCATIONS DURING FISCAL YEAR 2026-2027.

GENERAL NOTES:

This fee schedule is issued for use by School Districts, Institutions of Higher Education, County Offices of Education, California Regional Centers, State, County and Municipal Institutions, Non-Profit Public Organizations, and other institutions of similar structure, scope and purpose. This Fee Schedule is not to be used for public distribution nor for general publication.
The terms and conditions herein govern and supersede all previous versions of the terms and conditions for LRA Interpreters Inc., and their corresponding fiscal period.

All Interpreting fee rates quoted are for up to a **3-hour time block of time for one consumer/student.**

LRA services all languages spoken in California communities

STANDARD INTEPRETATION *(not written service)* **FEE SCHEDULE**

LANGUAGE	$	LANGUAGE	$	LANGUAGE	$
Amharic	499	Gujarati	484	Russian	417
Arabic	422	Hebrew	442	Spanish	285
Armenian	402	Indonesian	426	Spanish *E	414
Bengali	453	Italian	497	Tagalog	437
Cambodian	418	Korean	422	Thai	401
Cantonese	415	Mandarin	422	Urdu	437
Farsi	380	Portuguese	427	Vietnamese	418
French	420	Punjabi	437		

Please call us for Interpreting fees on other spoken languages not listed above.

Spanish *E: Fee applies to conferences, seminars, classes, public and large group meetings.

CONFERENCES, MEETINGS, SEMINARS, CLASSES, PUBLIC AND LARGE GROUP MEETINGS WITH ALTERNATING OR MULTIPLE SPEAKERS:

For events with multiple speakers programmed to run at a fast pace and scheduled for more than two hours, two alternating interpreters for each language are recommended to allow for each interpreter to get the same rest time received by each speaker and guarantee the integrity of the interpretation.

AMERICAN SIGN LANGUAGE (ASL) – ***Please contact LRA Interpreters Inc., for a quote when specific levels of certification are required.***

ASL/English

Up to two hours:	$ 310.00/interpreter.
Each additional hour or fraction thereof:	$ 155.00/interpreter.

ASL/English/Spanish (Trilingual with Spanish)

Up to two hours:	$ 330.00/interpreter
Each additional hour or fraction thereof	$ 165.00/interpreter

For certain ASL assignments, interpreters demand working in pairs to alternate their work during the scheduled time

due to the physical demands of this type of interpreting. LRA will advise when a pair interpreter is required. When a second interpreter is not available, and/or a single interpreter is requested for a session running at a brisk pace, the interpreter will require breaks to guarantee the integrity of the interpretation.

LEGAL (SETTING) INTERPRETING WORK: The fees quoted in this Fee Schedule do not apply to legal settings interpreting work such as: depositions, Court appearances and administrative hearings. Please call for a quote.

SPECIAL AND/OR MULTIPLE SKILL REQUIREMENTS: Orders for interpreters with special, technical or multiple skills, and orders which require the interpreting work to be done under special conditions (outside of what is reasonable considered normal or ordinary), may result in higher fees than those quoted herein.

SERVICE FEE APPLICATION: Interpreting service fees quoted apply to a single case, at a single location (address), a single scheduled time, and to a single type of service.

INTERPRETER ORDER REQUESTS: Shall include, among other items, the name of the event, the individual(s) for whom the event was scheduled, the individual who needs the interpreter's help, the name and telephone number or the contact person at the event's location, and the estimated time length of the event.

LATE ORDERS: Late orders are those last-minute requests to provide interpreter services, generally with less than 24 hours' notice. LRA will work diligently to cover interpreting service orders received in close proximity to the scheduled date of the event for which the service is needed. LRA has a good success rate for covering late orders. However, LRA's success in the coverage of every late order received cannot be assured since interpreters may not be available on short notice.

PARKING EXPENSE REIMBURSEMENT: When free parking is not provided or validated by the client or is not available in the near vicinity of the service site, parking fees related to the interpreter's service shall be reimbursed to LRA.

MILEAGE EXPENSE REIMBURSEMENT: LRA will try to assign interpreters, who are available and qualified, living within a radius of 18 miles from the interpreting job site. When this condition cannot be met, the round-trip mileage incurred by the interpreter more than 36 miles as determined from MapQuest shall be reimbursed to LRA at the prevailing Federal mileage expense reimbursement rate.

CANCELLATIONS: Notice of cancellation will only be received and acknowledged by LRA Interpreters Inc. during regular hours of operation. Notices of cancellation that are sent to LRA Interpreters Inc. outside regular business hours are considered to be received at 8:40 am the following business day.

LATE CANCELLATIONS: A late cancellation is a cancellation received with less than one full business days' notice from the scheduled start time of a specific interpreting assignment.

CANCELLATION FEES: Unless notified of a cancellation at least one full business day prior to the time the service is to be provided, LRA Interpreters Inc. shall be paid no less than the minimum fee previously stated in this fee schedule. This rule applies to a no-show, an on-site cancellation, and a late cancellation.

SERVICE PERIOD: Starts at the scheduled time of interpreter's appearance and ends at the conclusion of the block of time as indicated herein, or with the interpreter's dismissal by the person in charge of the scheduled event. LRA shall be paid no less than the full fee for a block of time regardless of the event concluding before the block of time runs out.

LRA's BUSINESS HOURS: Monday through Friday from 8:30 AM to 5:00 PM. Legal holidays and weekends are excluded. In case of an emergency, call LRA's office and follow the instructions of the phone message. A live person will call you back thereafter.

LIMITATION OF LIABILITY: LRA Interpreters, Inc.'s liability, if any, whether arising from breach of warranty, contract, negligence, indemnity, strict liability or other tort, or otherwise with respect to its services is limited to an amount not to exceed the price of the services giving rise to liability. In no event shall LRA Interpreters be liable for any indirect, incidental, lost profits, consequential or special damages.

LRA has provided interpreting and translation services continuously since 1990.

*****

LRA INTERPRETERS, INC.
LANGUAGE RESOURCES OF AMERICA

Translating and Interpreting All Languages

CALIFORNIA EDUCATION CODE SECTIONS 44237, 3502.1 AND 35021.2

COMMENTS FROM LRA INTERPRETERS, INC.

California Education Code, Sections 44237, 35021.1 and 35021.2 apply to persons or entities offering or conducting private school instruction on the elementary and high school level.

LRA Interpreters, Inc. does not offer or conduct any type of instruction to anyone.

LRA Interpreters, Inc. offers and conducts only interpreting and translation services, and nothing else. In the course of the execution of these services, the interpreter/translator helps two other parties, one of which may be a pupil, to communicate. In those cases where a student's presence is required, there is always a third party present as well. The third party may be a parent, a teacher, school administrative personnel, a nurse, a psychologist, a therapist or other personnel designated by the school.

Section 45125.1(a) of the California Education Code requires that employees of any entity that has a contract with a School District must submit their fingerprints if they are going to have any contact with the pupils.

However, Sections 45125.1 (c) and (d) provide an exception to the fingerprinting requirement of Section 45125.1(a) when the School District determines that the employees of the contracting entity will have limited contact with the pupils. These sections further elaborate on the factors to be considered in making such determination.

A copy of the California Education Code, Section 45125.1 (a), (b), (c) and (d) is included with these comments for reference purposes.

Please see attached Fingerprinting Waiver Justification information.

5455 Wilshire Blvd, Suite 1015 • Los Angeles, California 90036 • (323) 933-1006 • FAX (323) 933-1153

FINGERPRINTING WAIVER JUSTIFICATION

Justification Summary:

The services provided by Leo Rosenblum & Associates dba LRA Interpreters, are strictly limited to translation and interpretation.

How is the interpreter service provided: The service is provided by one interpreter who is in the presence of the IEP team at all times. The pupil is not always present. When the pupil is present, the IEP team, the pupil's parent or guardian, and the interpreter are all together in the IEP meeting room concurrently.

Proximity of interpreter's work area to pupil areas: The Interpreter provides services in a meeting room designated by the School. The location of the IEP meeting and the interpreter are under the IEP team's control.

Interpreter's time on the school grounds: Rarely exceeds two hours, and most often is less. The interpreter's time at the IEP meeting is determined, and controlled by the needs of the IEP team.

Justification details:

Translation and interpretation are the only services that LRA provides. LRA does not provide educational services, training services, medical or medical related services, therapy, corrective or improvement services of any kind, data collection, investigation, consulting or other.

LRA does not provide any service where the interpreter is alone with one or more students.

Translation services are those related to the translation of a document from a source language to a target language.

The interpreter facilitates communication between two or more individuals when one or more of them is not proficient in the understanding or use of the English language.

LRA provides interpretation services at IEP meetings where a student's status and needs are evaluated and determined by an IEP team, with the presence of the student and one or both of his parents or guardians. In these meetings the interpreter is under full supervision and complete control of the IEP team.

The interpreter's time on the school grounds rarely exceeds two hours and most often is less. The interpreter's time and action at an IEP meeting is determined and controlled by the needs of the IEP team.

The Order received by LRA details the name and location of the school, identifies the meeting room, names the contact person, specifies the target language, identifies the time at which the event is scheduled to start, and estimates the duration of the meeting.. LRA and its Interpreters have no control over any aspect of the meeting.

Upon arrival to the school office, the interpreter states the reason for the visit and is then seen to the meeting room. From that time forward, the interpreter acts under the direction of the IEP contact person. LRA directs the interpreter to follow the instructions of the contact person, and not to leave the premises without permission of the contact person. There is no compelling reason for the interpreter to be anywhere other than the IEP meeting room while on the school grounds.

Those who provide interpreting services through LRA Interpreters are not LRA employees. Each works as an independent contractor, as a one person independent company. They secure their work assignments from LRA and other interpreting service companies.

LRA Interpreters, Inc. a/k/a/ Language Resources of America

By: Abel Plockler, Vice president July 27, 2009

CALIFORNIA EDUCATION CODE

records.

(3) Information received shall be destroyed upon the hiring determination in accordance with subdivision (a) of Section 708 of Title 11 of the California Code of Regulations.

(4) Compliance with destruction, storage, dissemination, auditing, backgrounding, and training requirements as set forth in Sections 700 through 708, inclusive, of Title 11 of the California Code of Regulations and Section 11077 of the Penal Code governing the use and security of criminal offender record information is the responsibility of the entity receiving the information from the Department of Justice.

45125.1. (a) Except as provided in subdivisions (b) and (c), if the employees of any entity that has a contract with a school district, as defined in Section 41302.5, to provide any of the following services may have any contact with pupils, those employees shall submit or have submitted their fingerprints in a manner authorized by the Department of Justice together with a fee determined by the Department of Justice to be sufficient to reimburse the department for its costs incurred in processing the application:

(1) School and classroom janitorial.
(2) Schoolsite administrative.
(3) Schoolsite grounds and landscape maintenance.
(4) Pupil transportation.
(5) Schoolsite food-related.

(b) This section shall not apply to an entity providing any of the services listed in subdivision (a) to a school district in an emergency or exceptional situation, such as when pupil health or safety is endangered or when repairs are needed to make school facilities safe and habitable.

(c) This section shall not apply to an entity providing any of the services listed in subdivision (a) to a school district when the school district determines that the employees of the entity will have limited contact with pupils. In determining whether a contract employee has limited contact with pupils, the school district shall consider the totality of the circumstances, including factors such as the length of time the contractors will be on school grounds, whether pupils will be in proximity with the site where the contractors will be working, and whether the contractors will be working by themselves or with others. If a school district has made this determination, the school district shall take appropriate steps to protect the safety of any pupils that may come in contact with these employees.

(d) A school district may determine, on a case-by-case basis, to require an entity providing schoolsite services other than those listed in subdivision (a) or those described in Section 45125.2 and the entity's employees to comply with the requirements of this section, unless the school district determines that the employees of the entity will have limited contact with pupils. In determining whether a contract employee will have limited contact with pupils, the school district shall consider the totality of the circumstances, including factors such as the length of time the contractors will be on school grounds, whether pupils will be in proximity with the site where the contractors will be working, and whether the contractors will be working by themselves or with others. If a school district makes this determination, the school district shall take appropriate steps to protect the safety of any pupils that may come in contact with these employees. If a school district requires an entity providing services other than those listed in subdivision (a) and its employees to comply with the requirements of this section, the Department of Justice shall comply with subdivision.

(e) (1) The Department of Justice shall ascertain whether the individual whose fingerprints were submitted to it pursuant to subdivision (a) has been arrested or convicted of any crime insofar as that fact can be ascertained from information available to the

Burbank Unified School District
Special Education Department

REPORT TO THE BOARD

TO:	Members of the Board of Education
FROM:	Peter Knapik, Assistant Superintendent of Educational Services
PREPARED BY:	Jennifer Nicholson, Director of Special Education and Psychological Services
SUBMITTED BY:	Sandra Shearer, Administrative Secretary II
DATE:	June 25, 2026
SUBJECT:	Approval of Amended Agreement for Professional Services Provided by MYBASEPAY USA LLC for Special Education Students

---

Background:

The Board of Education is being asked to amend an agreement to hire a credentialed special education teacher through an agency because the District is unable to secure a full time, temporary or substitute teacher for an elementary classroom.

Discussion/Issues:

The District is obligated to provide specialized academic instruction and assessments and to implement Individualized Education Plans (IEPs) for students who attend our schools. The District does not have current staff able to support the current caseload and is, therefore, contracting with an agency to remain in compliance with IEP and Ed Code regulations.

Fiscal Impact:

Not to exceed $163,208.50.

Recommendation:

Peter Knapik, Assistant Superintendent of Educational Services, recommends that the Board of Education amend an agreement between Burbank Unified School District and MYBASEPAY USA LLC to provide a credentialed special education teacher, not to exceed $163,208.50 (01.0-65000.0-57601-11804-5810-7440000), effective August 8, 2025 through June 30, 2026 and that authority to sign the agreement be exercised pursuant to BUSD-AR 3314, as presented.

Note: The original approval date was July 24, 2025 for a total not to exceed $136,622.50. Due to an increase in teacher caseload, there is an increase in the total number of hours from 7 hours per day to 8 hours per day for 82 days. The second amendment added an additional $8,651.00 for a new not to exceed amount of $145,273.50. Due to the increase in caseload there was also an increase in IEPs to be completed so the end date has been extended from May 29, 2026 to June 30, 2026 which adds an additional $17,935 for a total not to exceed amount of $163,208.50.

Burbank Unified School District
1900 West Olive Avenue, Burbank, 91506
Tel: (818) 729-4473
Fax: (818) 729-4573
www.burbankusd.org

TERMS OF SECOND AMENDED AGREEMENT

This Agreement, made and entered into this 1st day of June 2026 by and between the **Burbank Unified School District**, hereinafter referred to as "District", and MYBASEPAY USA LLC hereinafter referred to as "Consultant."

Payee's Name: MYBASEPAY USA LLC Daytime Phone Number: 323-317-1625

Mailing Address: 2598 E Sunrise Blvd, Suite 2104 Fort Lauderdale, FL 33304

Email Address: Jaime.ulloa@conectaeducation.com

Sponsoring Administrator: Peter Knapik (Print Name) Assistant Superintendent (Title) _____ (Signature) Special Education (Location)

Board Approval: ~~07/24/2025~~ ~~02/05/2026~~ 06/25/2026 Account Code: 01.0-65000.0-57601-11804-5810-7440000

The District is authorized pursuant to Education Code section 35160 and Government Code Section 53060 to contract for the services of consultants.

WHEREAS, the Consultant is especially trained, experienced and competent to provide such services;

WHEREAS, in consideration of the mutual promises of the parties, hereto, the District hereby retains the Consultant upon the terms and conditions hereinafter set forth, and the Consultant hereby accepts said retention and agrees to perform the services hereinafter mentioned, upon said terms and conditions;

The parties mutually agree as follows:

1. The Consultant agrees to perform the following services for the District, at a rate of $105.50 per hour, **adding an additional 10 hours**. For a total not to exceed **~~$136,622.50~~ ~~$145,273.50~~ $163,208.50**

2. The term of the Agreement shall be the period commencing 08/08/2025 and terminating ~~05/29/2026~~ 06/30/2026.

3. Payment Terms: Net 45 Days

4. District desires to enter into an Agreement in which MYBASEPAY USA LLC will provide a credentialed special education teacher, Philip Akogu (multiple sites).

5. The Consultant shall provide a clear and concise invoice noting the time spent in providing the services and preparing the products required by this Agreement. Consultant will be paid at the conclusion of this contract unless otherwise stated in the payment terms above.

6. It is expressly understood and agreed to by both parties hereto that the Consultant, while engaged in carrying out and complying with any of the terms and conditions of this contract, is an independent contractor and is not an officer, agent or employee of the aforesaid District.

7. Consultant agrees to defend, indemnify, save, and hold harmless the District, its governing body, the individual members thereof, and all officers, agents and employees of the District from all loss, cost, and expense arising out of any liability or claim of liability for injury, damage, or loss sustained or claimed to have been sustained arising out of, or occurring as a result of Consultant's performance or failure to perform services under this Agreement.

8. This agreement may be terminated at any time based upon the mutual agreement of the parties hereto. This agreement may also be terminated immediately by the District should the Consultant breach this agreement or fail to perform the required services in a satisfactory manner.

9. Consultant agrees to pay all Federal, State and Local taxes, and fees that are owed as a result of payments made to Consultant pursuant to this agreement. Consultant agrees to indemnify and hold harmless the District from any and all costs, loss, or liability whatsoever arising from or caused by any challenge to the payments made to Consultant pursuant to this agreement, including but not limited to any liabilities or penalties assessed or levied by any and all local, state, or federal taxing authorities against the District.

10. Consultant agrees to ensure that they do not exceed the applicable earnings limitation under CALPERS or STRS and agrees to be solely responsible for any actions taken by CALPERS or STRS as a result of exceeding the applicable earnings limitation.

11. District and Consultant will communicate and send in writing all information received by the District regarding any work-related injury to Personnel within twenty-four hours of the injury.

12. Communicate within twenty-four hours to MYBASEPAY USA LLC the details of any incident, which may result in a complaint against any Personnel regarding professional services given by the Personnel.

13. The District agrees to indemnify, defend and hold harmless MYBASEPAY USA LLC from any and all negligence and all liabilities, claims, losses, costs, damages and expenses resulting or arising from or connected with the services rendered by the District, its agents, independent contractors, employees or servants pursuant to this contract.

14. This Agreement shall constitute the entire Agreement between the parties and any prior understanding or representation of any kind preceding the date of this Agreement shall not be binding upon either party except to the extent incorporated in this Agreement.

15. It is mutually agreed that both parties shall not discriminate against any individual in the performance of their obligations under this Agreement, on the basis of race, color, religion, national origin, sex, age or disability. Both parties further certify compliance with the applicable provisions of the Civil Rights Act of 1964, the Rehabilitation Act of 1973, and the Americans with Disabilities Act and State anti-discrimination laws.

INDEMNIFICATION

MYBASEPAY USA LLC shall save and hold the District harmless from and against and shall indemnify District for any liability, loss, cost, expense or damage whatsoever caused by reason of any injury sustained by any person or to property by reason of any act, neglect, default or omission of MYBASEPAY USA LLC or any of its agents, subcontractors, employees or other representatives. If District is sued in any court for damages by reason of any of the acts of MYBASEPAY USA LLC, its agents, subcontractors, employees or other representatives referred to in this Agreement, MYBASEPAY USA LLC shall defend said action (or cause same to be defended) as its own expense and shall pay any discharge and judgment that may be rendered in any such action. If MYBASEPAY USA LLC fails or neglects to so defend said action, District may defend the same and any expenses, including reasonable Attorney fees, which District may pay or incur in defending said action and the amount of any judgment which District may be required to pay shall be promptly reimbursed by MYBASEPAY USA LLC demand.

District shall save and hold MYBASEPAY USA LLC, harmless from and against and shall indemnify MYBASEPAY USA LLC for any liability, loss, cost, expense or damage whatsoever caused by reason of any injury sustained by any person or to property by reason of any act, neglect, default or omission of District, or any of its agents, subcontractors, employees or other representatives. If MYBASEPAY USA LLC is sued in any court for damages by reason of any of the acts of the District, its agents, subcontractors, employees or other representatives referred to in this Agreement, District shall defend said action (or cause same to be defended) as its own expense and shall pay any discharge and judgment that may be rendered in any such action. If District fails or neglects to so defend said action, MYBASEPAY USA LLC may defend the same and any expenses, including reasonable attorney's fees, which MYBASEPAY USA LLC may pay or incur in defending said action and the amount of any judgment which MYBASEPAY USA LLC may be required to pay shall be promptly reimbursed by District upon demand.

ARBITRATION

Any controversy or claim arising out of or relating to this Agreement, or the performance or breach thereof, shall be settled by means of binding arbitration in accordance with the rules of the American Arbitration Association, at Los Angeles, California.

If either party to this Agreement institutes any legal action or proceeding against the other party to the Agreement arising out of the Agreement, the prevailing party shall be entitled to recover its reasonable attorney's fees and costs from the non-prevailing party.

ACKNOWLEDGED AND AGREED TO

District:

Burbank Unified School District
District/Company Name

Jennifer Nicholson
Print Representative Name

Director of Special Education
Title

Signature

Date

ACKNOWLEDGED AND AGREED TO

Provider:

MYBASEPAY USA LLC
Provider/Company

Angela Alberty
Print Representative Name

CEO
Title

Angela Alberty
Signature

06/09/2026
Date

MYBASEPAY USA (Conecta)_SPED Teacher_Amendment 2 (06.09.2026)

Final Audit Report 2026-06-09

Created:	2026-06-09
By:	Angela Alberty (contracts@mybasepay.com)
Status:	Signed
Transaction ID:	CBJCHBCAABAA8kkEDphyZ0px0ihV3bLeGv1THfzTSWy6

"MYBASEPAY USA (Conecta)_SPED Teacher_Amendment 2 (06.09.2026)" History

Document created by Angela Alberty (contracts@mybasepay.com)
2026-06-09 - 5:30:49 PM GMT

Document emailed to Angela Alberty (contracts@mybasepay.com) for signature
2026-06-09 - 5:32:10 PM GMT

Document e-signed by Angela Alberty (contracts@mybasepay.com)
Signature Date: 2026-06-09 - 5:32:37 PM GMT - Time Source: server - Signature Appearance Selected: IMAGE

Agreement completed.
2026-06-09 - 5:32:37 PM GMT

Burbank Unified School
District Special Education
Department

REPORT TO THE BOARD

TO:	Members of the Board of Education
FROM:	Peter Knapik, Assistant Superintendent of Educational Services
PREPARED BY:	Jennifer Nicholson, Director of Special Education and Psychological Services
SUBMITTED BY:	Sandra Shearer, Administrative Secretary II
DATE:	June 25, 2026
SUBJECT:	Approval of Agreement for Professional Services Provided by RCM Healthcare Services (Special Education)

Background:

The Board of Education is being asked to approve an agreement for professional services to provide occupational therapy for Special Education students, pursuant to California Education Code (Sections 17604 and 35163), as presented in the Confidential Exhibit.

Discussion/Issues:

The District is currently obligated to provide services for students who are Burbank residents whose IEPs require such services. If the District does not have qualified staff to perform specific services, it is obligated to contract outside the District for such services. This agreement allows the District to provide the mandated physical therapy services to all students with IEPs who require such services.

Fiscal Impact:

Not to exceed $159,528.

Recommendation:

Peter Knapik, Assistant Superintendent of Educational Services, recommends that the Board of Education approve an agreement between the Burbank Unified School District and RCM Healthcare Services, to provide occupational therapy services for Special Education students, not to exceed $159,528 (01.0-65000.0-57602-11900-5850-7440000), effective July 1, 2026 through May 28, 2027, and that authority to sign the agreement be exercised pursuant to BUSD-AR 3314, as presented.

Burbank Unified School District
1900 West Olive Avenue, Burbank, 91506
Tel: (818) 729-4473
Fax: (818) 729-4573
www.burbankusd.org

TERMS OF AGREEMENT

This Agreement, made and entered into this 9th day of June 2026 by and between the **Burbank Unified School District,** hereinafter referred to as "District", and RCM Healthcare Services hereinafter referred to as "Provider."

Payee's Name: RCM Healthcare Services Daytime Phone Number: 917-286-5150

Mailing Address: 3 Paragon Drive, Suite 215 Montvale, NJ 07645 Email Address: andrew.hay@rcmt.com

Sponsoring Administrator: Assistant Superintendent Special Education
Print Name Title Signature Location

Board Approval: 06/25/2026 Account Code: 01.0-65000.0-57602-11900-5850-7440000

The District is authorized pursuant to Education Code section 35160 and Government Code Section 53060 to contract for the services of Providers.

WHEREAS, the Provider is especially trained, experienced and competent to provide such services;

WHEREAS, in consideration of the mutual promises of the parties, hereto, the District hereby retains the Provider upon the terms and conditions hereinafter set forth, and the Provider hereby accepts said retention and agrees to perform the services hereinafter mentioned, upon said terms and conditions;

The parties mutually agree as follows:

1. The Provider agrees to perform the following services for the District, at a rate of $102 per hour for a total not to exceed **$159,528.**

2. The term of the Agreement shall be the period commencing on: July 1, 2026 and terminating on: May 28, 2027.

3. Payment Terms: Net 45 Days

4. In no case should initial payment claim submission or initial rebillings/retroactive billing for any fiscal year (July through June) extend beyond **sixty (60) days after the close of the fiscal year.** Invoices received for a closed fiscal year beyond the sixty (60) day period will be returned unpaid and should be removed from the Providers accounts receivable. Exceptions to the above must be requested in writing and approved by the Special Education Administrator.

5. District desires to enter into an Agreement in which RCM Healthcare Services will provide an occupational therapist to provide services to Special Education students. Dates as follows:
   - ESY July 1, 2026 - July 11, 2026 - up to 5.5 hours daily plus a 30 minute lunch, 4 days a week not to exceed 22 hours weekly = $4,488
   - RSY August 8, 2026 - May 28, 2027 - up to 40 hours a week = $155,040

6. Provider shall provide a clear and concise invoice noting the time spent in providing the services and preparing the products required by this Agreement. Provider will be paid at the conclusion of this contract unless otherwise stated in the payment terms above.

7. It is expressly understood and agreed to by both parties hereto that the Provider, while engaged in carrying out and complying with any of the terms and conditions of this contract, is an independent contractor and is not an officer, agent or employee of the aforesaid District.

8. Provider shall comply with the requirements of California Education Code sections 44237, 35021.1, 35021.2, and 56366.1 including, but not limited to: obtaining clearance from the California Department of Justice (hereinafter referred to as "CDOJ") for Provider's employees, volunteers, subProviders, related outside agency service Provider's staff or any person with regular student contact employed directly or indirectly by it prior to service with any

   Burbank Unified School District (BUSD) student. Provider hereby agrees that Provider's employees, volunteers, subProviders or any person employed directly or indirectly (such as Department of Probation, Department of

   Children and Family Services, and/or Los Angeles Department of Children's Services) by it shall not come in contact with BUSD students, in person or virtually, until CDOJ clearance is ascertained. Provider shall certify in writing to BUSD that none of its employees, and volunteers, subProviders or any person employed directly or indirectly by it who may come into contact with BUSD students have been convicted of a violent or serious felony as those terms are defined in California Education Code section 44237(h), unless despite the employee's conviction of a violent or serious felony, he or she has met the criteria to be eligible for employment pursuant to California Education Code section 44237 (i) or (j). Provider shall certify to BUSD that they have successful background checks and enrolled in subsequent arrest notification service for all employees who may come into contact with students. In addition, Provider shall make a request for subsequent arrest service from the CDOJ as required by California Penal Code section 11105.2.

   Notwithstanding the restrictions on sharing and destroying criminal background check information, Provider, upon demand, shall make available to evidence of a successful criminal background check clearance and enrollment in subsequent arrest notice service, as provided, for each owner, operator, and employee of the nonpublic, nonsectarian school or agency. Provider is required to retain the evidence, as specified, for all staff, including those licensed or credentialed by another state agency. Background clearances and proof of subsequent arrest notification service as required by California Penal Code section 11105.2 for all staff shall be provided upon request.

9. Provider shall comply with the requirements of California Education Code sections 35021 *et. seq.* and 49406 regarding the examination of Provider's employees and volunteers for tuberculosis. Provider shall ensure and provide upon request to BUSD documentation for each individual volunteering, employed, contracted, and/or otherwise hired by Provider of such compliance before an individual comes in contact with a BUSD student.

10. Provider shall comply with OSHA Blood Borne Pathogens Standards, 29 Code of Federal Regulations section 1910.1030, when providing medical treatment or assistance to a BUSD student. Provider further agrees to provide annual training regarding universal health care precautions and to post required notices in areas designated in the California Health and Safety Code.

11. Provider agrees to defend, indemnify, save, and hold harmless the District, its governing body, the individual members thereof, and all officers, agents and employees of the District from all loss, cost, and expense arising out of any liability or claim of liability for injury, damage, or loss sustained or claimed to have been sustained arising out of, or occurring as a result of Provider's performance or failure to perform services under this Agreement.

12. This agreement may be terminated at any time based upon the mutual agreement of the parties hereto. This agreement may also be terminated immediately by the District should the Provider breach this agreement or fail to perform the required services in a satisfactory manner.

13. Provider agrees to pay all Federal, State and Local taxes, and fees that are owed as a result of payments made to Provider pursuant to this agreement. Provider agrees to indemnify and hold harmless the District from any and all costs, loss, or liability whatsoever arising from or caused by any challenge to the payments made to Provider pursuant to this agreement, including but not limited to any liabilities or penalties assessed or levied by any and all local, state, or federal taxing authorities against the District.

14. Provider agrees to ensure that they do not exceed the applicable earnings limitation under CALPERS or STRS and agrees to be solely responsible for any actions taken by CALPERS or STRS as a result of exceeding the applicable earnings limitation.

15. District and Provider will communicate and send in writing all information received by the District regarding any work-related injury to Personnel within twenty-four hours of the injury.

16. Communicate within twenty-four hours to RCM Healthcare Services the details of any incident, which may result in a complaint against any Personnel regarding professional services given by the Personnel.

17. The District agrees to indemnify, defend and hold harmless RCM Healthcare Services from any and all negligence and all liabilities, claims, losses, costs, damages and expenses resulting or arising from or connected with the services rendered by the District, its agents, independent contractors, employees or servants pursuant to this contract.

18. This Agreement shall constitute the entire Agreement between the parties and any prior understanding or representation of any kind preceding the date of this Agreement shall not be binding upon either party except to the extent incorporated in this Agreement.

19. It is mutually agreed that both parties shall not discriminate against any individual in the performance of their obligations under this Agreement, on the basis of race, color, religion, national origin, sex, age or disability. Both parties further certify compliance with the applicable provisions of the Civil Rights Act of 196

INDEMNIFICATION

RCM Healthcare Services shall save and hold the District harmless from and against and shall indemnify District for any liability, loss, cost, expense or damage whatsoever caused by reason of any injury sustained by any person or to property by reason of any act, neglect, default or omission of RCM Healthcare Services or any of its agents, subcontractors, employees or other representatives. If District is sued in any court for damages by reason of any of the acts of RCM Healthcare Services, its agents, subcontractors, employees or other representatives referred to in this Agreement, RCM Healthcare Services shall defend said action (or cause same to be defended) as its own expense and shall pay any discharge and judgment that may be rendered in any such action. If RCM Healthcare Services fails or neglects to so defend said action, District may defend the same and any expenses, including reasonable Attorney fees, which District may pay or incur in defending said action and the amount of any judgment which District may be required to pay shall be promptly reimbursed by RCM Healthcare Services demand.

District shall save and hold RCM Healthcare Services, harmless from and against and shall indemnify RCM Healthcare Services for any liability, loss, cost, expense or damage whatsoever caused by reason of any injury sustained by any person or to property by reason of any act, neglect, default or omission of District, or any of its agents, subcontractors, employees or other representatives. If RCM Healthcare Services is sued in any court for damages by reason of any of the acts of the District, its agents, subcontractors, employees or other representatives referred to in this Agreement, District shall defend said action (or cause same to be defended) as its own expense and shall pay any discharge and judgment that may be rendered in any such action. If District fails or neglects to so defend said action, RCM Healthcare Services may defend the same and any expenses, including reasonable attorney's fees, which RCM Healthcare Services may pay or incur in defending said action and the amount of any judgment which RCM Healthcare Services may be required to pay shall be promptly reimbursed by District upon demand.

ARBITRATION

Any controversy or claim arising out of or relating to this Agreement, or the performance or breach thereof, shall be settled by means of binding arbitration in accordance with the rules of the American Arbitration Association, at Los Angeles, California.

If either party to this Agreement institutes any legal action or proceeding against the other party to the Agreement arising out of the Agreement, the prevailing party shall be entitled to recover its reasonable attorney's fees and costs from the non-prevailing party.

ACKNOWLEDGED AND AGREED TO	ACKNOWLEDGED AND AGREED TO
District:	Provider:
Burbank Unified School District District/Company Name	RCM Healthcare Services Provider/Company
Jennifer Nicholson Print Representative Name	Michael Saks Print Representative Name
Director of Special Education Title	President Title
Signature	DocuSigned by: Michael Saks 8E5E22EC0ED5472... Signature
Date	6/9/2026 Date

Burbank Unified School District
Special Education Department

REPORT TO THE BOARD

TO:	Members of the Board of Education
FROM:	Peter Knapik, Assistant Superintendent of Educational Services
PREPARED BY:	Jennifer Nicholson, Director of Special Education and Psychological Services
SUBMITTED BY:	Sandra Shearer, Administrative Secretary II
DATE:	June 25, 2026
SUBJECT:	Approval of Agreement for Professional Services Provided by Gary D Stromberg & Associates, LLC for Special Education

Background:

The Board of Education is being asked to approve an agreement for professional services to hire an outside speech and language pathologist to provide support and assessments to Special Education students. The consultant will assist with assessments, writing the assessment reports and attending IEP's of Special Education students.

Discussion/Issues:

The District is obligated to provide assessments and implement Individualized Education Plans (IEP's) for students who attend our schools. The District does not have current staff available to support caseload overage and is, therefore, contracting with a consultant to remain in compliance with IEP and Ed Code regulations.

Fiscal Impact:

Not to exceed $140,624.

Recommendation:

Peter Knapik, Assistant Superintendent of Educational Services, recommends that the Board of Education approve an agreement between Burbank Unified School District and Gary D Stromberg & Associates, LLC, to provide a speech and language pathologist, not to exceed $140,624 (01.0-65000.0-57602-11901-5850-7440000), effective August 10, 2026 through June 4, 2027, and that authority to sign the agreement be exercised pursuant to BUSD-AR 3314, as presented.

Burbank Unified School District
1900 West Olive Avenue, Burbank, 91506
Tel: (818) 729-4473
Fax: (818) 729-4573
www.burbankusd.org

TERMS OF AGREEMENT

This Agreement, made and entered into this 9th day of June 2026 by and between the **Burbank Unified School District**, hereinafter referred to as "District", and Gary D Stromberg & Associates, LLC hereinafter referred to as "Provider."

Payee's Name: Gary D Stromberg & Associates, LLC Daytime Phone Number: 716-982-6556

Mailing Address: 110 Gleason Street Unit 303 Delray Beach FL 33483

Email Address: louis@strombergassociates.com

Sponsoring Administrator: _____ Assistant Superintendent _____ Special Education
Print Name Title Signature Location

Board Approval: 06/25/2026 Account Code: 01.0-65000.0-57602-11901-5850-7440000

The District is authorized pursuant to Education Code section 35160 and Government Code Section 53060 to contract for the services of Providers.

WHEREAS, the Provider is especially trained, experienced and competent to provide such services;

WHEREAS, in consideration of the mutual promises of the parties, hereto, the District hereby retains the Provider upon the terms and conditions hereinafter set forth, and the Provider hereby accepts said retention and agrees to perform the services hereinafter mentioned, upon said terms and conditions;

The parties mutually agree as follows:

1. The Provider agrees to perform the following services for the District, at a rate of $94 per hour, 40 hours each SLP per week, 40 weeks, for a total of **$140,624.**

2. The term of the Agreement shall be the period commencing on: 08/10/2026 and terminating on: 06/04/2026.

3. Payment Terms: Net 45 Days

4. In no case should initial payment claim submission or initial rebillings/retroactive billing for any fiscal year (July through June) extend beyond **sixty (60) days after the close of the fiscal year.** Invoices received for a closed fiscal year beyond the sixty (60) day period will be returned unpaid and should be removed from the Providers accounts receivable. Exceptions to the above must be requested in writing and approved by the Special Education Administrator.

5. District desires to enter into an Agreement in which Gary D Stromberg & Associates, LLC will provide a speech and language pathologist for support and assessments for special education students.

6. The Provider shall provide a clear and concise invoice noting the time spent in providing the services and preparing the products required by this Agreement. Provider will be paid at the conclusion of this contract unless otherwise stated in the payment terms above.

7. It is expressly understood and agreed to by both parties hereto that the Provider, while engaged in carrying out and complying with any of the terms and conditions of this contract, is an independent contractor and is not an officer, agent or employee of the aforesaid District.

8. Provider shall comply with the requirements of California Education Code sections 44237, 35021.1, 35021.2, and 56366.1 including, but not limited to: obtaining clearance from the California Department of Justice (hereinafter referred to as "CDOJ") for Provider's employees, volunteers, subProviders, related outside agency service Provider's staff or any person with regular student contact employed directly or indirectly by it prior to service with any Burbank Unified School District (BUSD) student. Provider hereby agrees that Provider's employees, volunteers, subProviders or any person employed directly or indirectly (such as Department of Probation, Department of

   Children and Family Services, and/or Los Angeles Department of Children's Services) by it shall not come in contact with BUSD students, in person or virtually, until CDOJ clearance is ascertained. Provider shall certify in writing to BUSD that none of its employees, and volunteers, subProviders or any person employed directly or indirectly by it who may come into contact with BUSD students have been convicted of a violent or serious felony as those terms are defined in California Education Code section 44237(h), unless despite the employee's conviction of a violent or serious felony, he or she has met the criteria to be eligible for employment pursuant to California Education Code section 44237 (i) or (j). Provider shall certify to BUSD that they have successful background checks and enrolled in subsequent arrest notification service for all employees who may come into contact with students. In addition, Provider shall make a request for subsequent arrest service from the CDOJ as required by California Penal Code section 11105.2.

   Notwithstanding the restrictions on sharing and destroying criminal background check information, Provider, upon demand, shall make available to evidence of a successful criminal background check clearance and enrollment in subsequent arrest notice service, as provided, for each owner, operator, and employee of the nonpublic, nonsectarian school or agency. Provider is required to retain the evidence, as specified, for all staff, including those licensed or credentialed by another state agency. Background clearances and proof of subsequent arrest notification service as required by California Penal Code section 11105.2 for all staff shall be provided upon request.

9. Provider shall comply with the requirements of California Education Code sections 35021 *et. seq.* and 49406 regarding the examination of Provider's employees and volunteers for tuberculosis. Provider shall ensure and provide upon request to BUSD documentation for each individual volunteering, employed, contracted, and/or otherwise hired by Provider of such compliance before an individual comes in contact with a BUSD student.

10. Provider shall comply with OSHA Blood Borne Pathogens Standards, 29 Code of Federal Regulations section 1910.1030, when providing medical treatment or assistance to a BUSD student. Provider further agrees to provide annual training regarding universal health care precautions and to post required notices in areas designated in the California Health and Safety Code.

11. Provider agrees to defend, indemnify, save, and hold harmless the District, its governing body, the individual members thereof, and all officers, agents and employees of the District from all loss, cost, and expense arising out of any liability or claim of liability for injury, damage, or loss sustained or claimed to have been sustained arising out of, or occurring as a result of Provider's performance or failure to perform services under this Agreement.

12. This agreement may be terminated at any time based upon the mutual agreement of the parties hereto. This agreement may also be terminated immediately by the District should the Provider breach this agreement or fail to perform the required services in a satisfactory manner.

13. Provider agrees to pay all Federal, State and Local taxes, and fees that are owed as a result of payments made to Provider pursuant to this agreement. Provider agrees to indemnify and hold harmless the District from any and all costs, loss, or liability whatsoever arising from or caused by any challenge to the payments made to Provider pursuant to this agreement, including but not limited to any liabilities or penalties assessed or levied by any and all local, state, or federal taxing authorities against the District.

14. Provider agrees to ensure that they do not exceed the applicable earnings limitation under CALPERS or STRS and agrees to be solely responsible for any actions taken by CALPERS or STRS as a result of exceeding the applicable earnings limitation.

15. District and Provider will communicate and send in writing all information received by the District regarding any work-related injury to Personnel within twenty-four hours of the injury.

16. Communicate within twenty-four hours to Gary D Stromberg & Associates, LLC the details of any incident, which may result in a complaint against any Personnel regarding professional services given by the Personnel.

17. The District agrees to indemnify, defend and hold harmless Gary D Stromberg & Associates, LLC from any and all negligence and all liabilities, claims, losses, costs, damages and expenses resulting or arising from or connected with the services rendered by the District, its agents, independent contractors, employees or servants pursuant to this contract.

18. This Agreement shall constitute the entire Agreement between the parties and any prior understanding or representation of any kind preceding the date of this Agreement shall not be binding upon either party except to the extent incorporated in this Agreement.

19. It is mutually agreed that both parties shall not discriminate against any individual in the performance of their obligations under this Agreement, on the basis of race, color, religion, national origin, sex, age or disability. Both parties further certify compliance with the applicable provisions of the Civil Rights Act of 1964, the Rehabilitation Act of 1973, and the Americans with Disabilities Act and State anti-discrimination laws.

INDEMNIFICATION

Gary D Stromberg & Associates, LLC shall save and hold the District harmless from and against and shall indemnify District for any liability, loss, cost, expense or damage whatsoever caused by reason of any injury sustained by any person or to property by reason of any act, neglect, default or omission of Gary D Stromberg & Associates, LLC or any of its agents, subcontractors, employees or other representatives. If District is sued in any court for damages by reason of any of the acts of Gary D Stromberg & Associates, LLC, its agents, subcontractors, employees or other representatives referred to in this Agreement, Gary D Stromberg & Associates, LLC shall defend said action (or cause same to be defended) as its own expense and shall pay any discharge and judgment that may be rendered in any such action. If Gary D Stromberg & Associates, LLC fails or neglects to so defend said action, District may defend the same and any expenses, including reasonable Attorney fees, which District may pay or incur in defending said action and the amount of any judgment which District may be required to pay shall be promptly reimbursed by Gary D Stromberg & Associates, LLC demand.

District shall save and hold Gary D Stromberg & Associates, LLC, harmless from and against and shall indemnify Gary D Stromberg & Associates, LLC for any liability, loss, cost, expense or damage whatsoever caused by reason of any injury sustained by any person or to property by reason of any act, neglect, default or omission of District, or any of its agents, subcontractors, employees or other representatives. If Gary D Stromberg & Associates, LLC is sued in any court for damages by reason of any of the acts of the District, its agents, subcontractors, employees or other representatives referred to in this Agreement, District shall defend said action (or cause same to be defended) as its own expense and shall pay any discharge and judgment that may be rendered in any such action. If District fails or neglects to so defend said action, Gary D Stromberg & Associates, LLC may defend the same and any expenses, including reasonable attorney's fees, which Gary D Stromberg & Associates, LLC may pay or incur in defending said action and the amount of any judgment which Gary D Stromberg & Associates, LLC may be required to pay shall be promptly reimbursed by District upon demand.

ARBITRATION

Any controversy or claim arising out of or relating to this Agreement, or the performance or breach thereof, shall be settled by means of binding arbitration in accordance with the rules of the American Arbitration Association, at Los Angeles, California.

If either party to this Agreement institutes any legal action or proceeding against the other party to the Agreement arising out of the Agreement, the prevailing party shall be entitled to recover its reasonable attorney's fees and costs from the non-prevailing party.

ACKNOWLEDGED AND AGREED TO

District:

Burbank Unified School District
District/Company Name

Jennifer Nicholson
Print Representative Name

Director of Special Education
Title

Signature

Date

ACKNOWLEDGED AND AGREED TO

Provider:

Gary D Stromberg & Associates, LLC
Provider/Company

Louis Stromberg
Print Representative Name

Director
Title

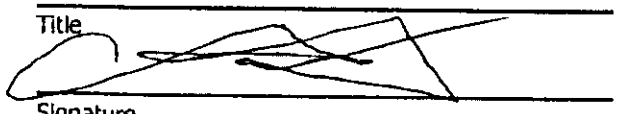
Signature

6/10/26
Date

Burbank Unified School District
Special Education Department

REPORT TO THE BOARD

TO:	Members of the Board of Education
FROM:	Peter Knapik, Assistant Superintendent of Educational Services
PREPARED BY:	Jennifer Nicholson, Director of Special Education and Psychological Services
SUBMITTED BY:	Sandra Shearer, Administrative Secretary II
DATE:	June 25, 2026
SUBJECT:	Approval of Amended Agreement for Professional Services Provided by Tiny Hands Therapy Inc. for Special Education

Background:

The Board of Education is being asked to amend an agreement with Tiny Hands Therapy, LLC, to provide occupational therapy to Special Education students.

Discussion/Issues:

The District is currently obligated to provide services for students who are Burbank residents whose IEPs require such services. If the District does not have qualified staff to perform specific services, it is obligated to contract outside the District for such services.

Fiscal Impact:

Not to exceed $197,180.

Recommendation:

Peter Knapik, Assistant Superintendent of Educational Services, recommends that the Board of Education amend an agreement between the Burbank Unified School District and Tiny Hands Therapy, LLC to provide occupational therapy to Special Education students, not to exceed $197,180 (01.0-65000.0-57602-11900-5850-7440000), effective August 4, 2025 through June 5, 2026, and that authority to sign the agreement be exercised pursuant to BUSD-AR 3314, as presented.

Note: The original approval date was September 4, 2025 for a total not to exceed $96,900. The District extended the agreement through May 22, 2026 for an additional $92,000 for a total of $188,900. Due to an increased need for occupational therapy during the first 9 days of ESY, this amendment adds an additional $8,280 for a total not to exceed amount of $197,180.

Burbank Unified School District
1900 West Olive Avenue, Burbank, 91506
Tel: (818) 729-4473
Fax: (818) 729-4573
www.burbankusd.org

TERMS OF AMENDED AGREEMENT

This Agreement, made and entered into this 2nd day of June 2026 by and between the **Burbank Unified School District**, hereinafter referred to as "District", and Tiny Hands Therapy Inc. hereinafter referred to as "Provider."

Payee's Name: Tiny Hands Therapy Inc. Daytime Phone Number: [redacted]

Mailing Address: [redacted]

Email Address: [redacted]

Sponsoring Administrator: Assistant Superintendent Special Education
Print Name Title Signature Location

Board Approval: ~~09/04/2025 12/11/2025~~ 06/25/2026 Account Code: 01.0-65000.0-57602-11900-5850-7440000

The District is authorized pursuant to Education Code section 35160 and Government Code Section 53060 to contract for the services of Providers.

WHEREAS, the Provider is especially trained, experienced and competent to provide such services;

WHEREAS, in consideration of the mutual promises of the parties, hereto, the District hereby retains the Provider upon the terms and conditions hereinafter set forth, and the Provider hereby accepts said retention and agrees to perform the services hereinafter mentioned, upon said terms and conditions;

The parties mutually agree as follows:

1. The Provider agrees to perform the following services for the District, at a rate of $115 per hour, up to 40 hours per week. For a total not to exceed ~~**$96,900 $188,900**~~ **$197,180** (21 weeks X 40 = 840 X $115 = $96,600).
   a. **Adding an additional 20 weeks X 40 = 800 X $115 = $92,000**
   b. **Second amendment adding 9 days = 72 hours x $115 = $8,280**

2. The term of the Agreement shall be the period commencing 08/04/2025 and terminating ~~01/09/2026 05/22/2026~~ 06/05/2026.

3. Payment Terms: Net 45 Days

4. District desires to enter into an Agreement in which Tiny Hands Therapy Inc. will provide occupational therapy to special education students during an employee's maternity leave.

5. The Provider shall provide a clear and concise invoice noting the time spent in providing the services and preparing the products required by this Agreement. Provider will be paid at the conclusion of this contract unless otherwise stated in the payment terms above.

6. It is expressly understood and agreed to by both parties hereto that the Provider, while engaged in carrying out and complying with any of the terms and conditions of this contract, is an independent contractor and is not an officer, agent or employee of the aforesaid District.

7. Provider agrees to defend, indemnify, save, and hold harmless the District, its governing body, the individual members thereof, and all officers, agents and employees of the District from all loss, cost, and expense arising out of any

liability or claim of liability for injury, damage, or loss sustained or claimed to have been sustained arising out of, or occurring as a result of Provider's performance or failure to perform services under this Agreement.

8. This agreement may be terminated at any time based upon the mutual agreement of the parties hereto. This agreement may also be terminated immediately by the District should the Provider breach this agreement or fail to perform the required services in a satisfactory manner.

9. Provider agrees to pay all Federal, State and Local taxes, and fees that are owed as a result of payments made to Provider pursuant to this agreement. Provider agrees to indemnify and hold harmless the District from any and all costs, loss, or liability whatsoever arising from or caused by any challenge to the payments made to Provider pursuant to this agreement, including but not limited to any liabilities or penalties assessed or levied by any and all local, state, or federal taxing authorities against the District.

10. Provider agrees to ensure that they do not exceed the applicable earnings limitation under CALPERS or STRS and agrees to be solely responsible for any actions taken by CALPERS or STRS as a result of exceeding the applicable earnings limitation.

11. District and Provider will communicate and send in writing all information received by the District regarding any work-related injury to Personnel within twenty-four hours of the injury.

12. Communicate within twenty-four hours to Tiny Hands Therapy Inc. the details of any incident, which may result in a complaint against any Personnel regarding professional services given by the Personnel.

13. The District agrees to indemnify, defend and hold harmless Tiny Hands Therapy Inc. from any and all negligence and all liabilities, claims, losses, costs, damages and expenses resulting or arising from or connected with the services rendered by the District, its agents, independent contractors, employees or servants pursuant to this contract.

14. This Agreement shall constitute the entire Agreement between the parties and any prior understanding or representation of any kind preceding the date of this Agreement shall not be binding upon either party except to the extent incorporated in this Agreement.

15. It is mutually agreed that both parties shall not discriminate against any individual in the performance of their obligations under this Agreement, on the basis of race, color, religion, national origin, sex, age or disability. Both parties further certify compliance with the applicable provisions of the Civil Rights Act of 1964, the Rehabilitation Act of 1973, and the Americans with Disabilities Act and State anti-discrimination laws.

INDEMNIFICATION

Tiny Hands Therapy Inc. shall save and hold the District harmless from and against and shall indemnify District for any liability, loss, cost, expense or damage whatsoever caused by reason of any injury sustained by any person or to property by reason of any act, neglect, default or omission of Tiny Hands Therapy Inc. or any of its agents, subcontractors, employees or other representatives. If District is sued in any court for damages by reason of any of the acts of Tiny Hands Therapy Inc., its agents, subcontractors, employees or other representatives referred to in this Agreement, Tiny Hands Therapy Inc. shall defend said action (or cause same to be defended) as its own expense and shall pay any discharge and judgment that may be rendered in any such action. If Tiny Hands Therapy Inc. fails or neglects to so defend said action, District may defend the same and any expenses, including reasonable Attorney fees, which District may pay or incur in defending said action and the amount of any judgment which District may be required to pay shall be promptly reimbursed by Tiny Hands Therapy Inc. demand.

District shall save and hold Tiny Hands Therapy Inc., harmless from and against and shall indemnify Tiny Hands Therapy Inc. for any liability, loss, cost, expense or damage whatsoever caused by reason of any injury sustained by any person or to property by reason of any act, neglect, default or omission of District, or any of its agents, subcontractors, employees or other representatives. If Tiny Hands Therapy Inc. is sued in any court for damages by reason of any of the acts of the District, its agents, subcontractors, employees or other representatives referred to in this Agreement, District shall defend said action (or cause same to be defended) as its own expense and shall pay any discharge and judgment that may be rendered in any such action. If District fails or neglects to so defend said action, Tiny Hands Therapy Inc. may defend the same and any expenses, including reasonable attorney's fees, which Tiny Hands Therapy Inc. may pay or incur in defending said action and the amount of any judgment which Tiny Hands Therapy Inc. may be required to pay shall be promptly reimbursed by District upon demand.

ARBITRATION

Any controversy or claim arising out of or relating to this Agreement, or the performance or breach thereof, shall be settled by means of binding arbitration in accordance with the rules of the American Arbitration Association, at Los Angeles, California.

If either party to this Agreement institutes any legal action or proceeding against the other party to the Agreement arising out of the Agreement, the prevailing party shall be entitled to recover its reasonable attorney's fees and costs from the non-prevailing party.

ACKNOWLEDGED AND AGREED TO	ACKNOWLEDGED AND AGREED TO
District:	Provider:
Burbank Unified School District	Tiny Hands Therapy Inc.
District/Company Name	Provider/Company
Jennifer Nicholson	Print Representative Name
Director of Special Education	
Title	Title
Signature	Signature
Date	Date

Burbank Unified School District
Special Education Department

REPORT TO THE BOARD

TO:	Members of the Board of Education
FROM:	Peter Knapik, Assistant Superintendent of Educational Services
PREPARED BY:	Jennifer Nicholson, Director of Special Education and Psychological Services
SUBMITTED BY:	Sandra Shearer, Administrative Secretary II
DATE:	June 25, 2026
SUBJECT:	Approval of Agreement for Professional Services Provided by West Shield Adolescent Services for Special Education Students

---

Background:

The Board of Education is being asked to approve the agreement to escort and transport Special Education students, pursuant to California Education Code (Sections 17604 and 35163), as presented in the Confidential Exhibit.

Discussion/Issues:

The District is currently obligated to provide services for students who are Burbank residents whose IEPs require such services. If the District does not have qualified staff to perform specific services, it is obligated to contract outside the District for such services.

Fiscal Impact:

Not to exceed $10,000.

Recommendation:

Peter Knapik, Assistant Superintendent of Educational Services, recommends that the Board of Education approve an agreement between the Burbank Unified School District and West Shield Adolescent Services, to escort and transport Special Education students to in-state or out-of-state residential facilities, not to exceed $10,000 (01.0-07240.0-50010-36000-5812-7440000), effective July 1, 2026 through June 30, 2027, and that authority to sign the agreement be exercised pursuant to BUSD-AR 3314, as presented.

Burbank Unified School District
1900 West Olive Avenue, Burbank, 91506
Tel: (818) 729-4473
Fax: (818) 729-4573
www.burbankusd.org

TERMS OF AGREEMENT

This Agreement, made and entered into this 8th day of June 2026 by and between the **Burbank Unified School District,** hereinafter referred to as "District", and West Shield Adolescent Services hereinafter referred to as "Provider."

Payee's Name: West Shield Adolescent Services Daytime Phone Number: 800-899-8585

Mailing Address: 16835 Algonquin Street Suite 439 Huntington Beach, CA 92649

Email Address: contactus@westshield.com

Sponsoring Administrator: _____ Assistant Superintendent _____ Special Education
Print Name Title Signature Location

Board Approval: 06/25/2026 Account Code: 01.0–07240.0-50010-36000-5812-7440000

The District is authorized pursuant to Education Code section 35160 and Government Code Section 53060 to contract for the services of Providers.

WHEREAS, the Provider is especially trained, experienced and competent to provide such services;

WHEREAS, in consideration of the mutual promises of the parties, hereto, the District hereby retains the Provider upon the terms and conditions hereinafter set forth, and the Provider hereby accepts said retention and agrees to perform the services hereinafter mentioned, upon said terms and conditions;

The parties mutually agree as follows:

1. The Provider agrees to perform the following services for the District, at a total not to exceed **$10,000** (rate sheet attached)

2. The term of the Agreement shall be the period commencing on: 07/01/2026 and terminating on: 06/30/2027.

3. Payment Terms: Net 45 Days

4. In no case should initial payment claim submission or initial rebillings/retroactive billing for any fiscal year (July through June) extend beyond **sixty (60) days after the close of the fiscal year.** Invoices received for a closed fiscal year beyond the sixty (60) day period will be returned unpaid and should be removed from the Providers accounts receivable. Exceptions to the above must be requested in writing and approved by the Special Education Administrator.

5. District desires to enter into an Agreement in which West Shield Adolescent Services will provide escort transportation services to special education students being placed at out of state/in state residential facilities.

6. Provider shall provide a clear and concise invoice noting the time spent in providing the services and preparing the products required by this Agreement. Provider will be paid at the conclusion of this contract unless otherwise stated in the payment terms above.

7. It is expressly understood and agreed to by both parties hereto that the Provider, while engaged in carrying out and complying with any of the terms and conditions of this contract, is an independent contractor and is not an officer, agent or employee of the aforesaid District.

8. Provider shall comply with the requirements of California Education Code sections 44237, 35021.1, 35021.2, and 56366.1 including, but not limited to: obtaining clearance from the California Department of Justice (hereinafter referred to as "CDOJ") for Provider's employees, volunteers, subProviders, related outside agency service Provider's staff or any person with regular student contact employed directly or indirectly by it prior to service with any Burbank Unified School District (BUSD) student. Provider hereby agrees that Provider's employees, volunteers, subProviders or any person employed directly or indirectly (such as Department of Probation, Department of

   Children and Family Services, and/or Los Angeles Department of Children's Services) by it shall not come in contact with BUSD students, in person or virtually, until CDOJ clearance is ascertained. Provider shall certify in writing to BUSD that none of its employees, and volunteers, subProviders or any person employed directly or indirectly by it who may come into contact with BUSD students have been convicted of a violent or serious felony as those terms are defined in California Education Code section 44237(h), unless despite the employee's conviction of a violent or serious felony, he or she has met the criteria to be eligible for employment pursuant to California Education Code section 44237 (i) or (j). Provider shall certify to BUSD that they have successful background checks and enrolled in subsequent arrest notification service for all employees who may come into contact with students. In addition, Provider shall make a request for subsequent arrest service from the CDOJ as required by California Penal Code section 11105.2.

   Notwithstanding the restrictions on sharing and destroying criminal background check information, Provider, upon demand, shall make available to evidence of a successful criminal background check clearance and enrollment in subsequent arrest notice service, as provided, for each owner, operator, and employee of the nonpublic, nonsectarian school or agency. Provider is required to retain the evidence, as specified, for all staff, including those licensed or credentialed by another state agency. Background clearances and proof of subsequent arrest notification service as required by California Penal Code section 11105.2 for all staff shall be provided upon request.

9. Provider shall comply with the requirements of California Education Code sections 35021 *et. seq.* and 49406 regarding the examination of Provider's employees and volunteers for tuberculosis. Provider shall ensure and provide upon request to BUSD documentation for each individual volunteering, employed, contracted, and/or otherwise hired by Provider of such compliance before an individual comes in contact with a BUSD student.

10. Provider shall comply with OSHA Blood Borne Pathogens Standards, 29 Code of Federal Regulations section 1910.1030, when providing medical treatment or assistance to a BUSD student. Provider further agrees to provide annual training regarding universal health care precautions and to post required notices in areas designated in the California Health and Safety Code.

11. Provider agrees to defend, indemnify, save, and hold harmless the District, its governing body, the individual members thereof, and all officers, agents and employees of the District from all loss, cost, and expense arising out of any liability or claim of liability for injury, damage, or loss sustained or claimed to have been sustained arising out of, or occurring as a result of Provider's performance or failure to perform services under this Agreement.

12. This agreement may be terminated at any time based upon the mutual agreement of the parties hereto. This agreement may also be terminated immediately by the District should the Provider breach this agreement or fail to perform the required services in a satisfactory manner.

13. Provider agrees to pay all Federal, State and Local taxes, and fees that are owed as a result of payments made to Provider pursuant to this agreement. Provider agrees to indemnify and hold harmless the District from any and all costs, loss, or liability whatsoever arising from or caused by any challenge to the payments made to Provider pursuant to this agreement, including but not limited to any liabilities or penalties assessed or levied by any and all local, state, or federal taxing authorities against the District.

14. Provider agrees to ensure that they do not exceed the applicable earnings limitation under CALPERS or STRS and agrees to be solely responsible for any actions taken by CALPERS or STRS as a result of exceeding the applicable earnings limitation.

15. District and Provider will communicate and send in writing all information received by the District regarding any work-related injury to Personnel within twenty-four hours of the injury.

16. Communicate within twenty-four hours to West Shield Adolescent Services the details of any incident, which may result in a complaint against any Personnel regarding professional services given by the Personnel.

17. The District agrees to indemnify, defend and hold harmless West Shield Adolescent Services from any and all negligence and all liabilities, claims, losses, costs, damages and expenses resulting or arising from or connected with the services rendered by the District, its agents, independent contractors, employees or servants pursuant to this contract.

18. This Agreement shall constitute the entire Agreement between the parties and any prior understanding or representation of any kind preceding the date of this Agreement shall not be binding upon either party except to the extent incorporated in this Agreement.

19. It is mutually agreed that both parties shall not discriminate against any individual in the performance of their obligations under this Agreement, on the basis of race, color, religion, national origin, sex, age or disability. Both parties further certify compliance with the applicable provisions of the Civil Rights Act of 1964, the Rehabilitation Act of 1973, and the Americans with Disabilities Act and State anti-discrimination laws.

INDEMNIFICATION

West Shield Adolescent Services shall save and hold the District harmless from and against and shall indemnify District for any liability, loss, cost, expense or damage whatsoever caused by reason of any injury sustained by any person or to property by reason of any act, neglect, default or omission of West Shield Adolescent Services or any of its agents, subcontractors, employees or other representatives. If District is sued in any court for damages by reason of any of the acts of West Shield Adolescent Services, its agents, subcontractors, employees or other representatives referred to in this Agreement, West Shield Adolescent Services shall defend said action (or cause same to be defended) as its own expense and shall pay any discharge and judgment that may be rendered in any such action. If West Shield Adolescent Services fails or neglects to so defend said action, District may defend the same and any expenses, including reasonable Attorney fees, which District may pay or incur in defending said action and the amount of any judgment which District may be required to pay shall be promptly reimbursed by West Shield Adolescent Services demand.

District shall save and hold West Shield Adolescent Services, harmless from and against and shall indemnify West Shield Adolescent Services for any liability, loss, cost, expense or damage whatsoever caused by reason of any injury sustained by any person or to property by reason of any act, neglect, default or omission of District, or any of its agents, subcontractors, employees or other representatives. If West Shield Adolescent Services is sued in any court for damages by reason of any of the acts of the District, its agents, subcontractors, employees or other representatives referred to in this Agreement, District shall defend said action (or cause same to be defended) as its own expense and shall pay any discharge and judgment that may be rendered in any such action. If District fails or neglects to so defend said action, West Shield Adolescent Services may defend the same and any expenses, including reasonable attorney's fees, which West Shield Adolescent Services may pay or incur in defending said action and the amount of any judgment which West Shield Adolescent Services may be required to pay shall be promptly reimbursed by District upon demand.

ARBITRATION

Any controversy or claim arising out of or relating to this Agreement, or the performance or breach thereof, shall be settled by means of binding arbitration in accordance with the rules of the American Arbitration Association, at Los Angeles, California.

If either party to this Agreement institutes any legal action or proceeding against the other party to the Agreement arising out of the Agreement, the prevailing party shall be entitled to recover its reasonable attorney's fees and costs from the non-prevailing party.

ACKNOWLEDGED AND AGREED TO

District:

Burbank Unified School District
District/Company Name

Jennifer Nicholson
Print Representative Name

Director of Special Education
Title

Signature

Date

ACKNOWLEDGED AND AGREED TO

Provider:

West Shield Adolescent Services
Provider/Company

Chase Cardoza
Print Representative Name

President
Title

Chase Cardoza
Signature

06/09/2026
Date

WEST SHIELD
ADOLESCENT SERVICES

April 17, 2026

Rates for the 2026-2027 School Years are as follows:

Lead Agent: $99.00 per hour

Back-up Agent: $88.00 per hour

(Federal Holiday Rates: Time and a Half)

Mileage rate at 0.585 (or current Federal Rate)

Plus, out of pocket expenses such as (food, gas, parking, hotel, etc.) Administration rate: $85.00 per hour (Average 4.5 hours per case). Payments processed with a credit card will incur a 3% credit card processing fee. We highly encourage ACH payments that incur no processing fee.

As you are aware, airfare rates vary greatly depending on the date and availability and destination. We utilize multiple resources to get the most cost-effective fares available. We greatly appreciate the opportunity to assist you in assisting these families in need.

If you have any questions, please don't hesitate to contact us.

Thank you,

Chase Cardoza
President

"Transporting Teens To A Better Future"
***16835 Algonquin St. Suite 439 * Huntington Beach, CA 92649 * 800) 899-8585 ***
FAX 714) 840-4143
Contactus@westshield.com

Burbank Unified School District
Special Education Department

REPORT TO THE BOARD

TO:	Members of the Board of Education
FROM:	Peter Knapik, Assistant Superintendent of Educational Services
PREPARED BY:	Jennifer Nicholson, Director of Special Education and Psychological Services
SUBMITTED BY:	Sandra Shearer, Administrative Secretary II
DATE:	June 25, 2026
SUBJECT:	Approval of Agreement for Professional Services Provided by Window (Joinwindow Dot Com Inc.) for Special Education

Background:

The Board of Education is being asked to approve an agreement for professional services to hire an outside speech and language pathologist to provide support and assessments to Special Education students. The consultant will assist with assessments, writing the assessment reports and attending IEP's of Special Education students.

Discussion/Issues:

The District is obligated to provide assessments and implement Individualized Education Plans (IEP's) for students who attend our schools. The District does not have current staff available to support caseload overage and is, therefore, contracting with a consultant to remain in compliance with IEP and Ed Code regulations.

Fiscal Impact:

Not to exceed $179,520.

Recommendation:

Peter Knapik, Assistant Superintendent of Educational Services, recommends that the Board of Education approve an agreement between Burbank Unified School District and Window (Joinwindow Dot Com Inc.) , to provide a speech and language pathologist, not to exceed $179,520 (01.0-65000.0-57602-11901-5850-7440000), effective August 10, 2026 through June 4, 2027, and that authority to sign the agreement be exercised pursuant to BUSD-AR 3314, as presented.

Burbank Unified School District
1900 West Olive Avenue, Burbank, 91506
Tel: (818) 729-4473
Fax: (818) 729-4573
www.burbankusd.org

TERMS OF AGREEMENT

This Agreement, made and entered into this 10th day of June 2026 by and between the **Burbank Unified School District**, hereinafter referred to as "District", and Window (Joinwindow Dot Com Inc.) hereinafter referred to as "Provider."

Payee's Name: Window (Joinwindow Dot Com Inc.) Daytime Phone Number: [redacted]

Mailing Address: [redacted] Email Address: [redacted]

Sponsoring Administrator: _____ Assistant Superintendent _____ Special Education
Print Name Title Signature Location

Board Approval: 06/25/2026 Account Code: 01.0-65000.0-57602-11901-5850-7440000

The District is authorized pursuant to Education Code section 35160 and Government Code Section 53060 to contract for the services of Providers.

WHEREAS, the Provider is especially trained, experienced and competent to provide such services;

WHEREAS, in consideration of the mutual promises of the parties, hereto, the District hereby retains the Provider upon the terms and conditions hereinafter set forth, and the Provider hereby accepts said retention and agrees to perform the services hereinafter mentioned, upon said terms and conditions;

The parties mutually agree as follows:

1. The Provider agrees to perform the following services for the District, at a rate of $110 - $120 per hour for a total not to exceed **$179,520.**

2. The term of the Agreement shall be the period commencing on: 08/10/2026 and terminating on: 06/04/2027.

3. Payment Terms: Net 45 Days

4. In no case should initial payment claim submission or initial rebillings/retroactive billing for any fiscal year (July through June) extend beyond **sixty (60) days after the close of the fiscal year**. Invoices received for a closed fiscal year beyond the sixty (60) day period will be returned unpaid and should be removed from the Providers accounts receivable. Exceptions to the above must be requested in writing and approved by the Special Education Administrator.

5. District desires to enter into an Agreement in which Window (Joinwindow Dot Com Inc.) will provide assessments and speech and language services to special education students, up to 40 hours a week during the 2026-2027 regular school year and extended school year (June only).

6. The Provider shall provide a clear and concise invoice noting the time spent in providing the services and preparing the products required by this Agreement. Provider will be paid at the conclusion of this contract unless otherwise stated in the payment terms above.

7. It is expressly understood and agreed to by both parties hereto that the Provider, while engaged in carrying out and complying with any of the terms and conditions of this contract, is an independent contractor and is not an officer, agent or employee of the aforesaid District.

8. Provider shall comply with the requirements of California Education Code sections 44237, 35021.1, 35021.2, and 56366.1 including, but not limited to: obtaining clearance from the California Department of Justice (hereinafter referred to as "CDOJ") for Provider's employees, volunteers, subProviders, related outside agency service Provider's staff or any person with regular student contact employed directly or indirectly by it prior to service with any Burbank Unified School District (BUSD) student. Provider hereby agrees that Provider's employees, volunteers, subProviders or any person employed directly or indirectly (such as Department of Probation, Department of

   Children and Family Services, and/or Los Angeles Department of Children's Services) by it shall not come in contact with BUSD students, in person or virtually, until CDOJ clearance is ascertained. Provider shall certify in writing to BUSD that none of its employees, and volunteers, subProviders or any person employed directly or indirectly by it who may come into contact with BUSD students have been convicted of a violent or serious felony as those terms are defined in California Education Code section 44237(h), unless despite the employee's conviction of a violent or serious felony, he or she has met the criteria to be eligible for employment pursuant to California Education Code section 44237 (i) or (j). Provider shall certify to BUSD that they have successful background checks and enrolled in subsequent arrest notification service for all employees who may come into contact with students. In addition, Provider shall make a request for subsequent arrest service from the CDOJ as required by California Penal Code section 11105.2.

   Notwithstanding the restrictions on sharing and destroying criminal background check information, Provider, upon demand, shall make available to evidence of a successful criminal background check clearance and enrollment in subsequent arrest notice service, as provided, for each owner, operator, and employee of the nonpublic, nonsectarian school or agency. Provider is required to retain the evidence, as specified, for all staff, including those licensed or credentialed by another state agency. Background clearances and proof of subsequent arrest notification service as required by California Penal Code section 11105.2 for all staff shall be provided upon request.

9. Provider shall comply with the requirements of California Education Code sections 35021 *et. seq.* and 49406 regarding the examination of Provider's employees and volunteers for tuberculosis. Provider shall ensure and provide upon request to BUSD documentation for each individual volunteering, employed, contracted, and/or otherwise hired by Provider of such compliance before an individual comes in contact with a BUSD student.

10. Provider shall comply with OSHA Blood Borne Pathogens Standards, 29 Code of Federal Regulations section 1910.1030, when providing medical treatment or assistance to a BUSD student. Provider further agrees to provide annual training regarding universal health care precautions and to post required notices in areas designated in the California Health and Safety Code.

11. Provider agrees to defend, indemnify, save, and hold harmless the District, its governing body, the individual members thereof, and all officers, agents and employees of the District from all loss, cost, and expense arising out of any liability or claim of liability for injury, damage, or loss sustained or claimed to have been sustained arising out of, or occurring as a result of Provider's performance or failure to perform services under this Agreement.

12. This agreement may be terminated at any time based upon the mutual agreement of the parties hereto. This agreement may also be terminated immediately by the District should the Provider breach this agreement or fail to perform the required services in a satisfactory manner.

13. Provider agrees to pay all Federal, State and Local taxes, and fees that are owed as a result of payments made to Provider pursuant to this agreement. Provider agrees to indemnify and hold harmless the District from any and all costs, loss, or liability whatsoever arising from or caused by any challenge to the payments made to Provider pursuant to this agreement, including but not limited to any liabilities or penalties assessed or levied by any and all local, state, or federal taxing authorities against the District.

14. Provider agrees to ensure that they do not exceed the applicable earnings limitation under CALPERS or STRS and agrees to be solely responsible for any actions taken by CALPERS or STRS as a result of exceeding the applicable earnings limitation.

15. District and Provider will communicate and send in writing all information received by the District regarding any work-related injury to Personnel within twenty-four hours of the injury.

16. Communicate within twenty-four hours to Window (Joinwindow Dot Com Inc.) the details of any incident, which may result in a complaint against any Personnel regarding professional services given by the Personnel.

17. The District agrees to indemnify, defend and hold harmless Window (Joinwindow Dot Com Inc.) from any and all negligence and all liabilities, claims, losses, costs, damages and expenses resulting or arising from or connected with the services rendered by the District, its agents, independent contractors, employees or servants pursuant to this contract.

18. This Agreement shall constitute the entire Agreement between the parties and any prior understanding or representation of any kind preceding the date of this Agreement shall not be binding upon either party except to the extent incorporated in this Agreement.

19. It is mutually agreed that both parties shall not discriminate against any individual in the performance of their obligations under this Agreement, on the basis of race, color, religion, national origin, sex, age or disability. Both parties further certify compliance with the applicable provisions of the Civil Rights Act of 1964, the Rehabilitation Act of 1973, and the Americans with Disabilities Act and State anti-discrimination laws.

INDEMNIFICATION

Window (Joinwindow Dot Com Inc.) shall save and hold the District harmless from and against and shall indemnify District for any liability, loss, cost, expense or damage whatsoever caused by reason of any injury sustained by any person or to property by reason of any act, neglect, default or omission of Window (Joinwindow Dot Com Inc.) or any of its agents, subcontractors, employees or other representatives. If District is sued in any court for damages by reason of any of the acts of Window (Joinwindow Dot Com Inc.), its agents, subcontractors, employees or other representatives referred to in this Agreement, Window (Joinwindow Dot Com Inc.) shall defend said action (or cause same to be defended) as its own expense and shall pay any discharge and judgment that may be rendered in any such action. If Window (Joinwindow Dot Com Inc.) fails or neglects to so defend said action, District may defend the same and any expenses, including reasonable Attorney fees, which District may pay or incur in defending said action and the amount of any judgment which District may be required to pay shall be promptly reimbursed by Window (Joinwindow Dot Com Inc.) demand.

District shall save and hold Window (Joinwindow Dot Com Inc.), harmless from and against and shall indemnify Window (Joinwindow Dot Com Inc.) for any liability, loss, cost, expense or damage whatsoever caused by reason of any injury sustained by any person or to property by reason of any act, neglect, default or omission of District, or any of its agents, subcontractors, employees or other representatives. If Window (Joinwindow Dot Com Inc.) is sued in any court for damages by reason of any of the acts of the District, its agents, subcontractors, employees or other representatives referred to in this Agreement, District shall defend said action (or cause same to be defended) as its own expense and shall pay any discharge and judgment that may be rendered in any such action. If District fails or neglects to so defend said action, Window (Joinwindow Dot Com Inc.) may defend the same and any expenses, including reasonable attorney's fees, which Window (Joinwindow Dot Com Inc.) may pay or incur in defending said action and the amount of any judgment which Window (Joinwindow Dot Com Inc.) may be required to pay shall be promptly reimbursed by District upon demand.

ARBITRATION

Any controversy or claim arising out of or relating to this Agreement, or the performance or breach thereof, shall be settled by means of binding arbitration in accordance with the rules of the American Arbitration Association, at Los Angeles, California.

If either party to this Agreement institutes any legal action or proceeding against the other party to the Agreement arising out of the Agreement, the prevailing party shall be entitled to recover its reasonable attorney's fees and costs from the non-prevailing party.

ACKNOWLEDGED AND AGREED TO

District:

Burbank Unified School District
District/Company Name

Jennifer Nicholson
Print Representative Name

Director of Special Education
Title

Signature

Date

ACKNOWLEDGED AND AGREED TO

Provider:

Window (Joinwindow Dot Com Inc.)
Provider/Company

Print Representative Name

Title

Signature

Date

Burbank Unified School District
Special Education Department

REPORT TO THE BOARD

TO:	Members of the Board of Education
FROM:	Peter Knapik, Assistant Superintendent of Educational Services
PREPARED BY:	Jennifer Nicholson, Director of Special Education and Psychological Services
SUBMITTED BY:	Sandra Shearer, Administrative Secretary II
DATE:	June 25, 2026
SUBJECT:	Approval of Master Contract Renewal for Nonpublic, Nonsectarian Schools and Agencies

---

Background:

The Special Education Department requests the following master blanket purchase order be approved by the Board of Education to cover the Nonpublic Schools (NPS) and Nonpublic Agencies (NPA) listed below.

Discussion/Issues:

The attachment is a list of SELPA approved Master Contracts for special education services to be provided by Nonpublic Schools (NPS's) and Nonpublic Agencies (NPA's).

In order to expedite payments to Nonpublic Schools (NPS)/Nonpublic Agencies (NPA), it was decided that it would be more efficient to create a blanket purchase order to cover expenses for a one-year period rather than bringing individual requests to every Board meeting for specific schools and students.

The implementation of this procedure will not diminish the District's internal accounting controls. Each invoice will undergo the same audit procedure which verifies attendance and billing rates, and require the same documentation in order to issue payment to the NPS/NPA. The required documentation includes a master contract with the NPS/NPA, an Individual Service Agreement (ISA) approving detailed services to each student, and an audited and authorized invoice.

The District has agreements for special education services to be provided by the attached list of Nonpublic Schools (NPS)/Nonpublic Agencies (NPA) for the months of July 2026 through June 2027.

Fiscal Impact:

Estimated costs for the attached list of NPS/NPA for July 2026 through June 2027: $9,5000,000.00

Recommendation:

Peter Knapik, Assistant Superintendent of Educational Services, recommends that the Board of Education approve the Master Contracts and service agreements for Special Education students, to be provided by the indicated nonpublic, nonsectarian schools and agencies as follows:

Non-Public Schools	School Year 2025 - 2026 (as of 6/9/2026)	School Year (projection) 2026 - 2027
	$2,690,578	$4,000,000
Non-Public Agency	School Year 2025 - 2026 (as of 6/9/2026)	School Year (projection) 2026 - 2027
	$7,559,143	$5,500,000

Effective July 1, 2026 through June 30, 2027, and that authority to sign the contracts be exercised pursuant to BUSD-AR 3314, as presented.

NONPUBLIC SCHOOL/AGENCY SERVICES

MASTER CONTRACT

2026-2027

TABLE OF CONTENTS

1. MASTER CONTRACT 1
2. CERTIFICATIONS AND LICENSES 2
3. COMPLIANCE WITH LAWS, STATUTES, REGULATIONS 2
4. TERM OF MASTER CONTRACT 3
5. INTEGRATION/CONTINUANCE OF CONTRACT FOLLOWING EXPIRATION OR TERMINATION 3
6. INDIVIDUAL SERVICES AGREEMENT ("ISA") 4
7. DEFINITIONS 5
8. NOTICES 6
9. MAINTENANCE OF RECORDS 7
10. SEVERABILITY CLAUSE 8
11. SUCCESSORS IN INTEREST AND NO ASSIGNMENT 8
12. VENUE AND GOVERNING LAW 8
13. MODIFICATIONS AND AMENDMENTS REQUIRED TO CONFORM TO LEGAL AND ADMINISTRATIVE GUIDELINES 8
14. TERMINATION 8
15. INSURANCE 8
16. INDEMNIFICATION AND HOLD HARMLESS 11
17. INDEPENDENT CONTRACTOR 12
18. SUBCONTRACTING 12
19. CONFLICTS OF INTEREST 13
20. NON-DISCRIMINATION 14
21. FREE AND APPROPRIATE PUBLIC EDUCATION 14
22. GENERAL PROGRAM OF INSTRUCTION 15
23. INSTRUCTIONAL MINUTES 16
24. CLASS SIZE 16
25. CALENDARS 17
26. DATA REPORTING 17
27. LEAST RESTRICTIVE ENVIRONMENT/DUAL ENROLLMENT 18
28. STATEWIDE ACHIEVEMENT TESTING 18
29. LEA MEETINGS AND TRAININGS 18
30. POSITIVE BEHAVIOR INTERVENTIONS 19
31. STUDENT DISCIPLINE 21
32. IEP TEAM MEETINGS 22
33. SURROGATE PARENTS, FOSTER YOUTH, AND HOMELESS YOUTH 23

34. DUE PROCESS PROCEEDINGS 23
35. COMPLAINT PROCEDURES 24
36. STUDENT PROGRESS REPORTS/REPORT CARDS AND ASSESSMENTS 24
37. GRADES, HIGH SCHOOL COURSE CREDITS, & TRANSCRIPTS 25
38. STUDENT CHANGE OF RESIDENCE 25
39. WITHDRAWAL OF LEA STUDENT FROM PROGRAM 25
40. PARENT ACCESS 25
41. SERVICES, SUPERVISION AND PROFESSIONAL CONDUCT 26
42. LICENSED CHILDREN'S INSTITUTION ("LCI") AND RESIDENTIAL TREATMENT CENTER ("RTC") CONTRACTORS 26
43. STATE MEAL PROGRAM MANDATE 27
44. MONITORING 27
45. PERSONNEL 29
46. CLEARANCE REQUIREMENTS 29
47. STAFF QUALIFICATIONS 29
48. VERIFICATION OF LICENSES, CREDENTIALS AND OTHER DOCUMENTS 31
49. STAFF ABSENCE 31
50. HEALTH AND SAFETY 32
51. TRAVEL 32
52. FACILITIES AND FACILITIES MODIFICATIONS 32
53. ADMINISTRATION OF MEDICATION 32
54. INCIDENT/ACCIDENT REPORTING 33
55. CHILD ABUSE REPORTING 33
56. SEXUAL HARASSMENT 33
57. REPORTING OF MISSING CHILDREN 33
58. ENROLLMENT, CONTRACTING, SERVICE TRACKING, ATTENDANCE REPORTING, AND BILLING PROCEDURES 34
59. RIGHT TO WITHHOLD PAYMENT 35
60. PAYMENT FROM OUTSIDE AGENCIES 36
61. PAYMENT FOR ABSENCES 36
62. LEA AND/OR NONPUBLIC SCHOOL CLOSURE DUE TO EMERGENCY 38
63. INSPECTION AND AUDIT 40
64. RATE SCHEDULE 41
65. DEBARMENT CERTIFICATION 42
INDIVIDUAL SERVICES AGREEMENT FOR NONPUBLIC SCHOOL OR AGENCY SERVICES 46

2026-2027

CONTRACT NUMBER: _____

NONPUBLIC SCHOOL/AGENCY/RELATED SERVICES PROVIDER:

_____

(Hereinafter referred to as "CONTRACTOR")

NONPUBLIC SCHOOL/AGENCY SERVICES MASTER CONTRACT

GENERAL PROVISIONS

1. **MASTER CONTRACT**

This Master Contract (or "Contract") is entered into this 1st day of July, 2026, between Burbank Unified School District (LEA, county office of education, a charter school participating as a member of the special education local plan area, or special education local plan area) , county of Los Angeles hereinafter referred to as the local educational agency ("LEA") and _____ (nonpublic school or agency), hereinafter referred to as NPS/A or "CONTRACTOR" for the purpose of providing special education and/or related services to students with exceptional needs under the authorization of California Education Code sections 56157, 56361 and 56365 *et seq.* and Title 5 of the California Code of Regulations section 3000 *et seq.*, AB490 (Chapter 862, Statutes of 2003) and AB1858 (Chapter 914, Statutes of 2004). It is understood that this agreement does not commit LEA to pay for special education and/or related services provided to any student, or CONTRACTOR to provide such special education and/or related services, unless and until an authorized LEA representative approves the provision of special education and/or related services by CONTRACTOR.

Upon acceptance of a student, LEA shall submit an Individual Services Agreement (hereinafter referred to as "ISA") to CONTRACTOR within 30 days. Unless otherwise agreed in writing, these forms shall acknowledge CONTRACTOR's obligation to provide all services specified in the student's Individualized Education Program (hereinafter referred to as "IEP"). The ISA shall be executed within ninety (90) days of a student's enrollment. LEA and CONTRACTOR shall enter into an ISA for each student served by CONTRACTOR. As available and appropriate, the LEA shall make available access to any electronic IEP system and /or electronic database for ISA developing including invoicing.

Unless placement is made and/or services are provided pursuant to an Office of Administrative Hearings (hereinafter referred to as "OAH") order, a lawfully executed settlement agreement between LEA and parent or authorized by LEA for a transfer student pursuant to California Education Code section 56325, or by written direction of the LEA, LEA is not responsible for the costs associated with NPS/A placement until the date on which an IEP team meeting is convened, the IEP team determines that a nonpublic school placement is appropriate, and the IEP is signed by the LEA student's parent evidencing the parent's agreement to the IEP. CONTRACTOR shall not admit a student living within the jurisdictional boundaries of the LEA on a private pay or tuition free "scholarship" basis and concurrently or actively support or

request parent(s) to pursue funding for the admitted school year from the LEA through due process proceedings.

2. CERTIFICATIONS AND LICENSES

CONTRACTOR shall be certified by the California Department of Education (hereinafter referred to as "CDE") as a NPS/A. All NPS/A services shall be provided consistent with the area of certification and licensure specified by CDE certification and as defined in California Education, Code sections 56366 *et seq.* and within the professional scope of practice of each provider's license, certification and/or credential. A current copy of CONTRACTOR's nonpublic school/agency certification or a waiver of such certification issued by the CDE pursuant to Education Code section 56366.2 must be provided to LEA on or before the date this Contract is executed by CONTRACTOR. This Master Contract may be terminated if such certification or waiver is expired, revoked, rescinded, or otherwise nullified during the effective period of this Master Contract. Total student enrollment shall be limited to the capacity as stated on CONTRACTOR's CDE certification and in Section 24 of the Master Contract.

In addition to meeting the certification requirements of the State of California, a CONTRACTOR that operates a program outside of this State shall be certified and all staff persons providing services to pupils shall be certified and/or licensed by that state to provide special education and related services and designated instruction and related services to pupils under the federal Individuals with Disabilities Education Act (20 U.S.C. Sec. 1400 et seq.).

If CONTRACTOR is a licensed children's institution (hereinafter referred to as "LCI"), CONTRACTOR shall be licensed by the state, or other public agency having delegated authority by contract with the state to license, to provide nonmedical care to children, including, but not limited to, individuals with exceptional needs. The LCI must also comply with all licensing requirements relevant to the protection of the child, and have a special permit, if necessary, to meet the needs of each child so placed. If the CONTRACTOR operates a program outside of this State, CONTRACTOR must obtain all required licenses from the appropriate licensing agency in both California and in the state where the LCI is located.

When CONTRACTOR is a NPS, an appropriately qualified person shall serve as curricular and instructional leader, and be able to provide leadership, oversight and professional development.

With respect to CONTRACTOR's certification, failure to notify the LEA in writing promptly, not more than 45 days of any changes in: (1) credentialed/licensed staff; (2) ownership; (3) management and/or control of the agency; (4) major modification or relocation of facilities; or (5) significant modification of the program may result in the suspension or termination of this Master Contract by the LEA.

3. COMPLIANCE WITH LAWS, STATUTES, REGULATIONS

During the term of this Master Contract unless otherwise agreed, CONTRACTOR shall comply with all applicable federal, state, and local statutes, laws, ordinances, rules, policies, and regulations. CONTRACTOR shall also comply with all applicable NPS/NPA LEA policies and procedures, unless, taking into consideration all of the surrounding facts and circumstances, a policy/procedure or policies/procedures, or a portion of a policy/policies, does not reasonably apply to CONTRACTOR.

CONTRACTOR hereby acknowledges and agrees that it accepts all risks and responsibilities for its failure to comply with all applicable LEA policies/procedures and shall indemnify LEA applicable policies/procedures and shall indemnify LEA under the provisions of section 16 of this contract for such failure.

CONTRACTOR acknowledges and understands that LEA may report to the CDE any violations of the provisions of this Master Contract; and that this may result in the suspension and/or revocation of CDE nonpublic school/agency certification pursuant to California Education Code section 56366.4(a).

4. TERM OF MASTER CONTRACT

The term of this Master Contract shall be from July 1, 2026 to June 30, 2027 (Title 5 California Code of Regulations section 3062(a)) unless otherwise stated. Neither the CONTRACTOR nor the LEA is required to renew this Master Contract in subsequent contract years. The parties acknowledge that any subsequent Master Contract is to be re-negotiated prior to June 30, 2027 (Title 5 California Code of Regulations section 3062(d)). In the event the contract negotiations are not agreed to by June 30th, the most recently executed Master Contract will remain in effect for 90 days. (CA Ed Code Section 56366 (c)(1) No Master Contract will be offered unless and until all of the contracting requirements have been satisfied. The offer of a Master Contract to a CONTRACTOR is at the sole discretion of the LEA.

Both parties agree to negotiate in good faith the basic education rates that the LEA will pay the CONTRACTOR during the term of each Master Contract. The Greater Los Angeles Area SELPAs Nonpublic School Rate Consideration Process for the 2015-2016 School Year or GLAAS/CAPSES agreed upon alternative process, with appropriately modified similar deadlines, will establish the preliminary steps of rate negotiation. When a final rate agreement is formally executed, the new rates for existing CONTRACTORS will be retroactive to the start of the school year (July 1). The new rates for new CONTRACTORS will be retroactive to the start of the applicable Master Contract. Payment will be made upon receipt of properly submitted billing for the retroactive difference.

The provisions of this Master Contract apply to CONTRACTOR and any of its employees or independent contractors. Notice of any change in CONTRACTOR's ownership or authorized representative shall be provided in writing to LEA within thirty (30) calendar days of change of ownership or change of authorized representative (EC56366.4).

5. INTEGRATION/CONTINUANCE OF CONTRACT FOLLOWING EXPIRATION OR TERMINATION

This Master Contract includes each Individual Services Agreement ("ISA") and they are incorporated herein by this reference. This Master Contract supersedes any prior or contemporaneous written or oral understanding or agreement. This Master Contract may be amended only by written amendment executed by both parties.

If CONTRACTOR does not return the Master Contract to LEA duly signed by an authorized representative within ninety (90) calendar days of issuance with agreed upon rates, the new contract rates will not take effect until the newly executed Master Contract is received by LEA. If CONTRACTOR fails to execute the new Master Contract within such 90-day period, all

payments for services performed after the 90-day period shall cease until such time as the new Master Contract for the current school year is signed and returned to LEA by CONTRACTOR. (California Education Code section 56366(c)(1) and (2)). In the event that this Master Contract expires or terminates, CONTRACTOR and LEA shall continue to be bound to all of the terms and conditions of the most recent executed Master Contract for services provided to LEA students authorized by the LEA.

6. **INDIVIDUAL SERVICES AGREEMENT ("ISA")**

This Agreement shall include an ISA developed for each LEA student to whom CONTRACTOR is to provide special education and/or related services. An ISA shall only be issued for LEA students enrolled with the approval of the LEA pursuant to California Education Code section 56366 (a)(2)(A). When an ISA is effective beyond this contract's expiration, and a new concurrent Master Contract is in effect, the rates on the new master contract apply to that ISA. In the event that this Master Contract expires or terminates, CONTRACTOR and LEA, shall continue to be bound to all of the terms and conditions of the most recent executed ISAs between CONTRACTOR and LEA for so long as CONTRACTOR is servicing authorized LEA students.

Any and all changes to a LEA student's educational placement/program provided under this Master Contract and/or an ISA shall be made solely on the basis of a revision to the LEA student's IEP or by written agreement between the parent and LEA. At any time during the term of this Master Contract, a LEA student's parent, CONTRACTOR, or LEA may request a review of a LEA student's IEP subject to all procedural safeguards required by law.

Unless otherwise provided in this Master Contract, the CONTRACTOR shall provide all services specified in the LEA student's IEP unless the CONTRACTOR and the LEA agree otherwise in the ISA. (California Education Code Section 56366(a) (5), and Title 5 of the California Code of Regulations Section 3062(e)). When CONTRACTOR is a nonpublic school/agency with an integrated program, CONTRACTOR shall provide all the CDE-certified related services as specified in the LEA's ISA and student's IEP. Lack of qualified personnel may result in proration of the basic education rate for integrated programs equal to the rate as paid to other NPS for same related service. In the event the CONTRACTOR is unable to provide a specific service at any time during the life of the ISA, the CONTRACTOR shall notify the LEA in writing within ten (10) business days of the last date a service was provided. CONTRACTOR shall provide any and all subsequent compensatory service hours awarded to student as a result of lack of provision of services by CONTRACTOR while student was served by the nonpublic school or agency. LEA shall compensate CONTRACTOR for the compensatory service hours at the rates specified by the current contract unless billed for previously or included in a bundled rate.

If a parent or LEA contests the termination of an ISA by initiating a due process proceeding with the OAH, CONTRACTOR shall abide by the "stay-put" requirement of state and federal law unless the parent agrees otherwise or an interim alternative educational setting is deemed lawful and appropriate by LEA or OAH, consistent with Section 1415(k)(1)(7) of Title 20 of United States Code. CONTRACTOR shall adhere to all LEA requirements concerning changes in placement.

Disagreements between LEA and CONTRACTOR concerning the formulation of an ISA or the Master Contract may be appealed to the Los Angeles County Superintendent of Schools or the

State Superintendent of Public Instruction pursuant to the provisions of California Education Code section 56366(c) (2).

7. DEFINITIONS

The following definitions shall apply for purposes of this contract:

a. The term "CONTRACTOR" means a nonpublic school or agency certified by the California Department of Education identified on page 1 of this Master Contract and its officers and employees.

b. The term "authorized LEA representative" means a LEA administrator or designee. It is understood, a representative of the Special Education Local Plan Area (SELPA) of which the LEA is a member is an authorized LEA representative in collaboration with the LEA. The LEA maintains sole responsibility for this Contract, unless otherwise specified in this Contract.

c. The term "credential" means a valid credential, life diploma, permit, or document in special education or pupil personnel services issued by, or under the jurisdiction of, the State Board of Education if issued prior to 1970, or the California Commission on Teacher Credentialing ("CTC") which entitles the holder thereof to perform services for which certification qualifications are required as defined in Title 5 of the California Code of Regulations section 3001(j).

d. The term "qualified" means that a person holds a certificate, permit or other document equivalent to that which staff in a public school are required to hold to provide special education and designated instruction and services and has met federal and state certification, licensing, registration, or other comparable requirements which apply to the area in which he or she is providing special education or related services, including those requirements set forth in Title 34 of the Code of Federal Regulations sections 200.56 and 200.58, and those requirements set forth in Title 5 of the California Code of Regulations Sections 3064 and 3065, and adheres to the standards of professional practice established in federal and state law or regulation, including the standards contained in the California Business and Professions Code.

   Nothing in this definition shall be construed as restricting the activities in services of a graduate needing direct hours leading to licensure, or of a student teacher or intern leading to a graduate degree at an accredited or approved college or university, as authorized by state laws or regulations. (Title 5 of the California Code of Regulations Section 3001 (y)).

e. The term "license" means a valid non-expired document issued by a licensing agency within the Department of Consumer Affairs or other state licensing office authorized to grant licenses and authorizing the bearer of the document to provide certain professional services, or refer to themselves using a specified professional title, including but not limited to mental health and board and care services at a residential placement. If a license is not available through an appropriate state licensing agency, a certificate of registration with the appropriate professional organization at the national or state level which has standards established for the certificate that are equivalent to a license shall

be deemed to be a license as defined in Title 5 of the California Code of Regulations section 3001(r).

f. The term "Parent" means

1. a biological or adoptive parent unless the biological or adoptive parent does not have legal authority to make educational decisions for the child;
2. a guardian generally authorized to act as the child's parent or authorized to make educational decisions for the child;
3. an individual acting in the place of a biological or adoptive parent, including a grandparent, stepparent, or other relative with whom the child lives, or an individual who is legally responsible for the child's welfare;
4. a surrogate parent;
5. a foster parent if the authority of the biological or adoptive parent to make educational decisions on the child's behalf has been specifically limited by court order in accordance with Code of Federal Regulations 300.30(b)(1) or (2).
6. Parent does not include the state or any political subdivision of government or the NPS/A under contract with the LEA for the provision of special education or designated instruction and services for a child. (California Education Code section 56028).

g. The term "days" means calendar days unless otherwise specified.

h. The phrase "billable day" means a school day in which instructional minutes meet or exceed those in comparable LEA programs.

i. The phrase "billable day of attendance" means a school day as defined in California Education Code Section 46307, in which a LEA student is in attendance and in which instructional minutes meet or exceed those in comparable LEA programs unless otherwise stipulated in an IEP or ISA;

j. It is understood that the term "Master Contract" also means "Contract" and is referred to as such in this document.

ADMINISTRATION OF CONTRACT

8. NOTICES

All notices provided for by this contract shall be in writing. Notices shall be mailed, electronically delivered or delivered by hand and shall be effective as of the date of receipt by addressee.

All notices to LEA shall be addressed to the person and address as indicated on the signature page of this Master Contract. Notices to CONTRACTOR shall be addressed as indicated on signature page of this Master Contract.

9. MAINTENANCE OF RECORDS

CONTRACTOR shall maintain all records as required by state and federal laws and regulations. CONTRACTOR and LEA agree that neither party is a "covered entity" or maintains "protected health information" as defined by the Health Insurance Portability and Accountability Act ("HIPPA"). Rather, CONTRACTOR and LEA acknowledge that the student educational records maintained by the parties are governed by the Family Educational Rights and Privacy Act ("FERPA"). Notwithstanding the foregoing sentence, CONTRACTOR shall maintain all records for at least five (5) years after the termination of this Master Contract. For purposes of this Master Contract, "records" shall include, but not be limited to: student records as defined by California Education Code section 49061(b) including electronically stored information; cost data and records as set forth in Title 5 of the California Code of Regulations section 3061; registers and roll books of teachers and/or daily service providers; daily service logs and notes used to record the provision of related services including supervision; daily service logs and notes or other documents used to record the provision of services provided through adult assistance (herein after referred to as "aide"), behavior intervention aides, and bus aides; behavior emergency reports (BER); incident reports; notification of injuries; absence verification records; bus rosters; staff lists specifying credentials held and documents evidencing other staff qualifications, social security numbers, dates of hire, and dates of termination; records of employee training and certification, including verification of behavior training consistent with EC section 56366.1; staff time sheets; non-paid staff and volunteer sign-in sheets; transportation and other related services subcontracts; school calendars; bell/class schedules when applicable; liability and worker's compensation insurance policies; state nonpublic school and/or agency certifications; by-laws, if applicable; lists of current board of directors/trustees, if incorporated; and other documents evidencing financial expenditures; federal/state payroll quarterly reports (Form 941/DE3DP); and bank statements and canceled checks or facsimile thereof or evidence of electronic payments.

CONTRACTOR shall maintain LEA student records in a secure location to ensure confidentiality and prevent unauthorized access. CONTRACTOR shall maintain a current list of the names and positions of CONTRACTOR's employees who have access to confidential records. CONTRACTOR shall maintain an access log for each LEA student's record which lists all persons, agencies, or organizations requesting or receiving information from the record. Such log shall be maintained as required by California Education Code section 49064 and include the name, title, agency/organization affiliation, and date/time of access for each individual requesting or receiving information from the LEA student's record. Such log shall record access to the LEA student's records by: (a) the LEA student's parent; (b) parties to whom directory information is released pursuant to California Education Code section 49073. (c) an individual to whom written consent has been executed by the LEA student's parent; or (d) employees of LEA or CONTRACTOR having a legitimate educational interest in requesting or receiving information from the record pursuant to California Education Code Section 49076. For purposes of this paragraph, "employees of LEA or CONTRACTOR" do not include subcontractors. CONTRACTOR shall grant parents access to student records, and comply with parents' requests for copies of student records, as required by state and federal laws and regulations. CONTRACTOR agrees, in the event of school or agency closure, to forward LEA student records within ten (10) business days to LEA. These shall include, but are not limited to, current transcripts, state test score reports, IEP/IFSPs, BERs, incident reports, notification of injuries, and all other relevant reports. LEA and/or SELPA shall have access to and receive copies of any and all records upon request within five (5) business days.

10. **SEVERABILITY CLAUSE**

If any provision of this agreement is held, in whole or in part, to be unenforceable for any reason, the remainder of that provision and of the entire agreement shall be severable and remain in effect.

11. **SUCCESSORS IN INTEREST AND NO ASSIGNMENT**

This contract binds CONTRACTOR's successors and assignees. CONTRACTOR shall notify the LEA within 30 days of any change of ownership or corporate control.

12. **VENUE AND GOVERNING LAW**

The laws of the State of California shall govern the terms and conditions of this contract with venue in Los Angeles County, California.

13. **MODIFICATIONS AND AMENDMENTS REQUIRED TO CONFORM TO LEGAL AND ADMINISTRATIVE GUIDELINES**

This Master Contract may be modified or amended by the LEA to conform to administrative and statutory guidelines issued by any local, state, or federal governmental agency. The party seeking modification or amendment shall provide thirty (30) days' notice of any such changes or modifications made to conform to administrative or statutory guidelines and a copy of the statute or regulation upon which the modifications or changes are based. In the event urgency or emergency legislation is passed, the notice period may be less than thirty (30) days.

14. **TERMINATION**

This Master Contract or an ISA may be terminated for cause. The cause shall not be the availability of a public class initiated during the period of the contract unless the parent and LEA agree to a change of student's placement at an IEP team meeting, or pursuant to a lawful order from an administrative agency or court of competent jurisdiction. To terminate the contract either party shall give twenty (20) days prior written notice. California Education Code section 56366(a)(4). At the time of termination, CONTRACTOR shall provide upon request to LEA any and all documents CONTRACTOR is required to maintain under this Master Contract. ISAs are void upon termination of this Master Contract, as provided in section 5 or 6. To terminate the ISA, either party shall give twenty (20) days prior written notice.

15. **INSURANCE**

CONTRACTOR shall, at his, her, or its sole cost and expense, maintain in full force and effect, during the term of this Agreement, the following insurance coverage from a California licensed, authorized and/or admitted insurer with an A minus (A-), VII, or better rating from A.M. Best, sufficient to cover any claims, damages, liabilities, costs and expenses (including attorney's fees) arising out of or in connection with Contractor's fulfillment of any of its obligations under this Agreement or either party's use of the Work or any component or part thereof. The CONTRACTOR shall provide a Certificate of Insurance which lists the LEA as an additional insured and will contain no exclusions; and a copy of the insurance policy in its entirety which shall confirm the parties understanding that it is the intent of the parties that the insurance cover

any and all obligations including liabilities or debts incurred by the LEA as a result of the CONTRACTOR'S negligence which results in the LEA incurring any loss including but not limited to as a result of Education Code section 56383 or any civil action.

PART I

a. **Commercial General Liability Insurance**, which lists LEA as an additional insured, including both bodily injury and property damage, with limits as follows:

$1,000,000 per occurrence
$ 100,000 fire damage
$ 5,000 medical expenses
$1,000,000 personal & adv. Injury
$2,000,000 general aggregate
$2,000,000 products/ completed operations aggregate

b. **Business Auto Liability Insurance,** which lists the LEA as an additional insured, for all owned, scheduled, non-owned or hired automobiles with a $1 million combined single limit.

If no owned automobiles, then only hired and non-owned is required.

Notwithstanding any vicarious liability on behalf of the CONTRACTOR, if CONTRACTOR or its employees or agents use a personal vehicle and travels to/from school sites, between schools and/or to/from student's homes or other locations as approved service location by the LEA, Contractor must comply with State of California automobile financial responsibility laws.

If CONTRACTOR provides transportation services to students utilizing a van, bus or any vehicle designed to carry 10 or more passengers, CONTRACTOR shall ensure that CONTRACTOR keeps in effect a combined single limited business auto liability policy of no less than $5,000,000 per occurrence.

c. **Workers' Compensation and Employers Liability Insurance** in a form and amount covering Contractor's full liability under the California Workers' Compensation Insurance and Safety Act and in accordance with applicable state and federal laws.

Part A – Statutory Limits (CA Labor Code 3700 et seq.)
Part B - Employers Liability - $1,000,000/$1,000,000/$1,000,000

Sole proprietors with no employees are exempt from providing Workers' Compensation and Employers Liability Insurance, but must provide a signed Workers' Compensation Statement.

d. **Errors & Omissions (E & O)/Malpractice (Professional Liability)** coverage, which lists the LEA as an additional insured, with the following limits:

$1,000,000 per occurrence
$1,000,000 general aggregate

e. **Sexual Molestation and Abuse coverage, unless that coverage is afforded elsewhere in the Commercial General Liability or Professional Liability policy by endorsement, with the following limits:**

$3,000,000 per occurrence
$3,000,000 general aggregate.

f. Contractor, upon execution of this contract and periodically thereafter upon request, shall furnish the LEA with certificates of insurance and a complete copy of the insurance policy evidencing such coverage. The Commercial General Liability, Automobile Liability, E & O / Professional Liability, and the Sexual Molestation and Abuse Coverage policies shall name the LEA _____ (insert LEA) and the Board of Education as additional insured. Premiums on all insurance policies shall be paid by Contractor and shall be deemed included in Contractor's obligations under this contract at no additional charge.

g. Any deductibles or self-insured retentions above $100,000 must be declared to and approved by the LEA. At its option, LEA may require the CONTRACTOR, at the CONTRACTOR's sole cost, to: (a) cause its insurer to reduce to levels specified by the LEA or eliminate such deductibles or self-insured retentions with respect to the LEA, its officials and employees, or (b) procure a bond guaranteeing payment of losses and related investigation.

h. For any claims related to the services performed in connection with this Master Contract, the CONTRACTOR's insurance coverage shall be the primary insurance with respect to the LEA, its subsidiaries, officials and employees. Any insurance or self-insurance maintained by the LEA, its subsidiaries, officials and employees shall be excess of the CONTRACTOR's insurance and shall not contribute with it.

i. All Certificates of Insurance must reference the contract number, name of the school or agency submitting the certificate, and the location of the school or agency submitting the certificate.

PART II

INSURANCE REQUIREMENTS FOR NONPUBLIC SCHOOLS AFFILIATED WITH A RESIDENTIAL TREATMENT FACILITY

When CONTRACTOR is a nonpublic school affiliated with a residential treatment center (NPS/RTC), the following insurance policies are required:

a. **Commercial General Liability** which lists the LEA as an additional insured and provides coverage of $3,000,000 per Occurrence and 6,000,000 in the Aggregate. The policy shall be endorsed to name the LEA and the Board of Education as *named* additional insured and shall provide specifically that any insurance carried by the LEA which may be applicable to any claims or loss shall be deemed excess and the RTC's insurance shall be deemed primary despite any conflicting provisions in the RTC policy.

b. The additional insured language required in Part II, Sections a, c, e, and f shall also contain language stating that the RTC shall provide the Certificate of Insurance which

will contain no exclusions; and a copy of the insurance policy in its entirety which shall confirm the parties understanding that it is the intent of the parties that the insurance cover any and all obligations including liabilities or debts incurred by the LEA as a result of the RTC's negligence or intentional acts which results in the LEA incurring any loss including but not limited to as a result of Education Code section 56383. Coverage shall be maintained with no Self-Insured Retention above $100,000 without the prior written approval of the LEA Risk Management Services.

c. **Workers' Compensation Insurance** in accordance with provisions of the California Labor Code adequate to protect the RTC from claims that may arise from its operations pursuant to the Workers' Compensation Act (Statutory Coverage). The Workers' Compensation Insurance coverage must also include Employers Liability coverage with limits of $1,000,000/$1,000,000/$1,000,000.

d. **Commercial Auto Liability** coverage, which lists the LEA as an additional insured, with limits of $1,000,000 Combined Single Limit per Occurrence if the RTC does not operate a student bus service. If the RTC provides student bus services, the required coverage limit is $5,000,000 Combined Single Limit per Occurrence.

e. **Fidelity Bond** or **Crime Coverage** shall be maintained by the RTC to cover all employees who process or otherwise have responsibility for RTC funds, supplies, equipment or other assets. Minimum amount of coverage shall be $50,000 per occurrence, with no self-insured retention.

f. **Professional Liability/Errors & Omissions/MALPRACTICE** coverage, which lists the LEA as an additional insured, with minimum limits of $3,000,000 per occurrence and $6,000,000 general aggregate.

g. **Sexual Molestation and Abuse coverage**, which lists the LEA as an additional insured, unless that coverage is afforded elsewhere in the Commercial General Liability or Professional liability policy by endorsement, with minimum limits of $3,000,000 per occurrence and $6,000,000 general aggregate.

If LEA or CONTRACTOR determines that changes in insurance coverage obligations under this section are necessary, either party may reopen negotiations to modify the insurance obligations.

16. INDEMNIFICATION AND HOLD HARMLESS

To the fullest extent allowed by law, CONTRACTOR shall indemnify and hold LEA and its Board Members, administrators, employees, agents, attorneys, volunteers, and subcontractors ("LEA Indemnitees") harmless against all liability, loss, damage and expense (including reasonable attorneys' fees and costs) resulting from or arising out of this Master Contract or its performance, to the extent that such loss, expense, damage or liability was proximately caused by the negligent, intentional or willful act or omission of CONTRACTOR, including, without limitation, its agents, employees, subcontractors or anyone employed directly or indirectly by it (excluding LEA and LEA Indemnitees). The duty and obligation to defend shall arise immediately upon tender of a request to defend a due process hearing complaint under the Individuals with Disabilities in Education Act, or lawsuit naming the LEA. The duty to indemnify and defend shall any and all obligations including liabilities or debts incurred by the

LEA as a result of the CONTRACTOR'S negligence which results in the LEA incurring any loss including but not limited to as a result of Education Code section 56383 or any civil action.

To the fullest extent allowed by law, LEA shall indemnify and hold CONTRACTOR and its Board Members, administrators, employees, agents, attorneys, and subcontractors ("CONTRACTOR Indemnitees") harmless against all liability, loss, damage and expense (including reasonable attorneys' fees and costs) resulting from or arising out of this Master Contract or its performance, to the extent that such loss, expense, damage or liability was proximately caused by the negligent, intentional act or willful act or omission of LEA, including, without limitation, its agents, employees, subcontractors or anyone employed directly or indirectly by it (excluding CONTRACTOR and/or any CONTRACTOR Indemnitees).

LEA represents that it is insured/self-insured in compliance with the laws of the State of California, that the self-insurance/insurance covers LEA employees acting within the course and scope of their respective duties and that its self-insurance/insurance covers the LEA's indemnification obligations under this Master Contract.

17. INDEPENDENT CONTRACTOR

Nothing herein contained will be construed to imply a joint venture, partnership or principal-agent relationship between the LEA and CONTRACTOR. CONTRACTOR shall provide all services under this Agreement as an independent contractor, and neither party shall have the authority to bind or make any commitment on behalf of the other. Nothing contained in this Agreement shall be deemed to create any association, partnership, joint venture or relationship of principal and agent, master and servant, or employer and employee between the parties or any affiliates of the parties, or between the LEA and any individual assigned by CONTRACTOR to perform any services for the LEA.

18. SUBCONTRACTING

CONTRACTOR shall provide written notification to LEA before subcontracting for special education and/or related services pursuant to this Master Contract. In the event LEA determines that it can provide the subcontracted service(s) at a lower rate, LEA may elect to provide such service(s). If LEA elects to provide such service(s), LEA shall provide written notification to CONTRACTOR within five (5) days of receipt of CONTRACTOR's original notice and CONTRACTOR shall not subcontract for said service(s). CONTRACTOR shall incorporate all of the provisions of this Master Contract in all subcontracts, to the fullest extent reasonably possible. Furthermore, when CONTRACTOR enters into subcontracts for the provision of special education and/or related services (including without limitation transportation) for any LEA student, CONTRACTOR shall cause each subcontractor to procure and maintain insurance during the term of each subcontract. Such subcontractor's insurance shall comply with the provisions of section 15. Each subcontractor shall furnish the LEA with original endorsements and certificate of insurance effecting coverage required by section 15. The endorsements are to be signed by a person authorized by that insurer to bind coverage on its behalf. All endorsements are to be received and approved by the LEA before the subcontractor's work commences. The Commercial General Liability and Automobile Liability policies shall name the LEA and the LEA's Board of Education as an additional insured.

As an alternative to the LEA's forms, a subcontractor's insurer may provide complete, certified copies of all required insurance policies, including endorsements affecting the coverage required by this Master Contract. All Certificates of Insurance must reference the LEA contract number, name of the school or agency submitting the certificate, indication if NPS or NPA, and the location of the school or agency submitting the certificate. In addition, all sub-contractors must meet the requirements as contained in section 46 Clearance Requirements and section 47 Staff Qualifications of this Master Contract.

19. **CONFLICTS OF INTEREST**

CONTRACTOR shall provide upon request to LEA a copy of its current bylaws and a current list of its Board of Directors (or Trustees), if it is incorporated. CONTRACTOR and any member of its Board of Directors (or Trustees) shall disclose any relationship with LEA that constitutes or may constitute a conflict of interest pursuant to California Education Code section 56042 and Government Code Section 1090 including, but not limited to, employment with LEA, provision of private party assessments and/or reports, and attendance at IEP team meetings and/or due process proceedings acting as a student's advocate. Unless CONTRACTOR and LEA otherwise agree in writing, LEA shall not execute an ISA with CONTRACTOR nor amend an existing ISA for a LEA student when a parent of the LEA student is an owner, employee or agent of the NPA or NPS. CONTRACTOR shall endeavor to avoid the assignment of close relatives or cohabitants to work in situations involving the provision of special education and/or related services to any LEA student where conflicts of interest could arise. For purposes of this Agreement, close relatives shall be defined as including spouse, sibling, parent, child, or grandchild; cohabitants shall be defined as persons living together. Exceptions to this term can only be made in writing between CONTRACTOR and LEA. Pursuant to California Education Code section 56042, an attorney or advocate for a parent of an individual with exceptional needs shall not recommend placement at CONTRACTOR's facility if the attorney or advocate is employed or contracted by the CONTRACTOR, or will receive a benefit from the CONTRACTOR, or otherwise has a conflict of interest.

Unless CONTRACTOR and LEA otherwise agree in writing, LEA shall neither execute an ISA with CONTRACTOR nor amend an existing ISA for a LEA student when a recommendation for new or additional special education and/or related services is based in whole or in part on assessment(s) or reports provided by CONTRACTOR to the LEA student without prior written authorization by LEA. This section shall apply to CONTRACTOR regardless of when an assessment is performed or a report is prepared (i.e., before or after the LEA student is enrolled in CONTRACTOR's school/agency) or whether an assessment of the LEA student is performed or a report is prepared in the normal course of the services provided to the LEA student by CONTRACTOR. LEA shall compensate CONTRACTOR for related service assessments, performed at the request of the LEA when CONTRACTOR, prior to beginning the assessment, provides LEA with a written notice of the expected costs of the assessment, and LEA elects to proceed with the assessment. To avoid a conflict of interest, and in order to ensure the appropriateness of an Independent Educational Evaluation (hereinafter referred to as "IEE") and its recommendations, the LEA may, in its discretion, not fund an IEE by an evaluator who provides ongoing service(s) or is sought to provide service(s) to the student for whom the IEE is requested. Likewise, the LEA may, in its discretion, not fund ongoing services provided by the evaluator whose IEE the LEA agrees to fund when no other appropriate assessor is available, LEA may request and if contractor agrees, the contractor may provide an IEE.

CONTRACTOR shall not admit a student living within the jurisdictional boundaries of the LEA on a private pay or tuition free "scholarship" basis and concurrently or subsequently advise/request parent(s) to pursue funding for the admitted school year from the LEA through due process proceedings.

20. **NON-DISCRIMINATION**

CONTRACTOR shall not, in employment or operation of its programs, unlawfully discriminate on the basis of gender, nationality, national origin, ancestry, race, color, ethnicity, ethnic group affiliation, religion, age, marital status, pregnancy or parental status, sex, sexual orientation, gender, gender identity or expression, physical or mental disability, genetic information, or any other classification protected by federal or state law or the perception of one or more of such characteristics, or association with a person or group with one or more of these actual or perceived characteristics.

EDUCATIONAL PROGRAM

21. **FREE AND APPROPRIATE PUBLIC EDUCATION**

LEA shall provide CONTRACTOR with a copy of the IEP including the Individualized Transition Plan (hereinafter referred to as "ITP") of each LEA student served by CONTRACTOR. CONTRACTOR shall provide to each LEA student special education and/or related services (including transition services) within the nonpublic school or nonpublic agency consistent with the LEA student's IEP and as specified in the ISA. If CONTRACTOR is a NPS, CONTRACTOR shall not accept a LEA student if it cannot provide or ensure the provision of all of the services outlined in the student's IEP unless CONTRACTOR and LEA agree otherwise in the contract or ISA. (California Education Code section 56366 (a) (5)). If student services are provided by a subcontractor (i.e. Related Services Provider), CONTRACTOR shall notify LEA within thirty (30) days if the provision of services cease.

Unless otherwise agreed to between CONTRACTOR and LEA, CONTRACTOR shall be responsible for the provision of all appropriate supplies, equipment, or facilities for LEA students, as specified in the LEA student's IEP and ISA. CONTRACTOR shall ensure that facilities are adequate to provide LEA students with an environment, which meets all pertinent health and safety regulations. CONTRACTOR shall make no charge of any kind to parents for special education and/or related services as specified in the LEA student's IEP and ISA including, but not limited to, screenings, assessments, or interviews that occur prior to or as a condition of the LEA student's enrollment under the terms of this Master Contract. CONTRACTOR may charge a LEA student's parent(s) for services and/or activities not necessary for the LEA student to receive a free appropriate public education after: (a) written notification to the LEA student's parent(s) of the cost and voluntary nature of the services and/or activities; and (b) receipt by the LEA of the written notification and a written acknowledgment signed by the LEA student's parent(s) of the cost and voluntary nature of the services and/or activities. CONTRACTOR shall adhere to all LEA requirements concerning parent acknowledgment of financial responsibility.

Voluntary services and/or activities not necessary for the LEA student to receive a free appropriate public education shall not interfere with the LEA student's receipt of special education and/or related services as specified in the LEA student's IEP and ISA.

If an IEP team determines that a student requires an assistive technology device or equipment for low-incidence disabilities, it is the LEA's responsibility to provide the device or equipment listed on that student's IEP and ISA, and if necessary provide training on the use of the device or equipment. The assistive technology device or low-incidence equipment remains the property of the LEA and shall be returned to the LEA when the IEP team determines the equipment is no longer needed or when the student is no longer enrolled in the nonpublic school or transfers out of the LEA.

22. GENERAL PROGRAM OF INSTRUCTION

All NPS/A services shall be provided consistent with the area of certification specified by CDE certification and as defined in California Education Code section 56366 *et seq*, and shall ensure that facilities are adequate to provide LEA students with an environment, which meets all pertinent health and safety regulations.

When CONTRACTOR is a NPS, CONTRACTOR's general program of instruction shall: (a) utilize evidence-based practices and be consistent with LEA's standards regarding the particular course of study and curriculum; (b) include curriculum that addresses mathematics, literacy and the use of educational technology and transition services; (c) be consistent with CDE's standards regarding the particular course of study and curriculum; (d) provide the services as specified in the LEA student's IEP and ISA. LEA students shall have access to: (a) State Board of Education ("SBE") adopted, Common Core State Standards ("CCSS") for curriculum and instructional materials for kindergarten and grades 1 to 8, inclusive; and provide CCSS curriculum and instructional materials for grades 9 to 12, inclusive, used by a LEA that contracts with the NPS; (b) college preparation courses; (c) extracurricular activities, such as art, sports, music and academic clubs; (d) career preparation and vocational training, consistent with transition plans pursuant to state and federal law and; (e) supplemental assistance, including individual academic tutoring, psychological counseling, and career and college counseling.

When CONTRACTOR serves LEA students in grades 9 through 12 inclusive, LEA shall provide to CONTRACTOR a specific list of the course requirements to be satisfied by the CONTRACTOR leading toward graduation or completion of LEA's diploma requirements. CONTRACTOR shall not award a high school diploma to students who have not successfully completed all of the LEA's graduation requirements. Per IEP team determination, CONTRACTOR shall provide curriculum, instruction, and course of study in alignment with EC section 51225.31.

A pupil in foster care shall be defined pursuant to California Education Code section 51225.2. The LEA shall annually notify the CONTRACTOR who the LEA has designated as the educational liaison for foster children. When a pupil in foster care is enrolled in a NPS by the LEA any time after the completion of the pupil's second year of high school, the CONTRACTOR shall schedule the pupil in courses leading towards graduation based on the diploma requirements of the LEA unless provided notice otherwise in writing.

When CONTRACTOR is a NPA and/or related services provider, CONTRACTOR's general program of instruction and/or services shall utilize evidence-based practices and be consistent with LEA and CDE guidelines and certification and be provided as specified in the LEA student's IEP and ISA. The NPA providing Behavior Intervention shall develop a written plan that specifies the nature of their NPA service for each student within thirty (30) days of enrollment and shall be available upon request. School-based services may not be unilaterally

converted by CONTRACTOR to a substitute program or provided at a location not specifically authorized by the IEP team. Except for services provided by a contractor that is a Licensed Children's Institution (LCI), all services not provided in the clinic/school setting require the presence of a parent, guardian or adult caregiver with written and signed authority to make decisions in an emergency during the delivery of services. LCI contractors shall ensure that appropriate and qualified residential or clinical staff are present during the provision of services under this Master Contract. CONTRACTOR shall immediately notify LEA in writing if no parent, guardian or adult caregiver is present. It is understood and agreed that the parent of a LEA student shall not be deemed by CONTRACTOR to be qualified as a provider for their own child. CONTRACTOR shall make available upon request to LEA a written description of the general program of instruction and/or services provided prior to the effective date of this Master Contract. It is understood that Behavior Intervention Therapy services are limited per CDE Certification and do not constitute an instructional program.

When CONTRACTOR is a NPA, CONTRACTOR shall not provide transportation services nor subcontract for transportation services for LEA students unless the LEA and the CONTRACTOR agree otherwise in writing.

23. INSTRUCTIONAL MINUTES

For LEA students in grades pre-kindergarten through 12 inclusive, unless otherwise specified in the LEA student's IEP and ISA, the weekly total number of instructional minutes, excluding breakfast, recess, lunch, and passing time, shall be at the same level that Ed. Code prescribes for the LEA.

The total number of annual instructional minutes shall be at least equivalent to the total number of annual instructional minutes provided to LEA students attending LEA schools in like grade levels unless otherwise specified in the LEA student's IEP.

When CONTRACTOR is a NPA and/or related services provider, the total number of minutes per school day provided by CONTRACTOR shall be specified in the LEA student's ISA developed in accordance with the LEA student's IEP.

24. CLASS SIZE

When CONTRACTOR is a NPS, CONTRACTOR shall ensure that grades K-4 class size shall not exceed a ratio of one teacher per twelve (12) students. Upon prior written approval by an authorized LEA representative, class size may be temporarily increased by a ratio of 1 teacher to fourteen (14) students when necessary to provide services to elementary students with disabilities. CONTRACTOR shall ensure that grades 5-12 and Transition class size shall not exceed a ratio of 1 teacher per fourteen (14) students.

Should CONTRACTOR be unable to fill a vacant teaching position responsible for direct instruction to students, and the vacancy has a direct impact on the CDE Certification of that school, the NPS shall develop a plan to ensure appropriate coverage of students by first utilizing existing certificated staff. CONTRACTOR and LEA may agree to one thirty (30) school day period per contract year where class size may be increased to ensure coverage by an appropriately credentialed teacher. Such a request shall not be unreasonably denied. Such agreement shall be valid only if it is in writing and signed by both parties.

CONTRACTORS providing special education instruction for individuals with exceptional needs between the ages of three and five years, inclusive, shall also comply with the appropriate instructional adult to child ratios pursuant to California Education Code sections 56440 *et seq.*

25. CALENDARS

When CONTRACTOR is an NPS, CONTRACTOR shall submit to LEA/SELPA a school year calendar with the total number of billable days not to exceed one hundred and eighty (180) days for the regular school year (RSY), plus twenty (20) extended school year (ESY)billable days or the equivalent number of days as the LEA's extended school year calendar, if different. Billable days shall include only those days that are included in the submitted and approved school calendar, and shall not exceed the number of days in LEA's approved calendar and/or required by the IEP for each LEA student. CONTRACTOR will notify LEA of unanticipated changes in the school calendar, due to emergency school closures, within 24 hours and will send LEA, within ten days of the last emergency closure day, a revised school or service calendar with replacement dates to provide services within the current school year.

CONTRACTOR shall observe the same legal holidays as LEA. Those holidays are Labor Day, Veteran's Day, Thanksgiving Day, Christmas Day, New Year's Day, Dr. Martin Luther King, Jr. Day, President's Day, Memorial Day, Juneteenth, and Independence Day. With the approval of LEA, CONTRACTOR may revise the date upon which CONTRACTOR closes in observance of any of the holidays observed by LEA.

When CONTRACTOR is an NPA, CONTRACTOR shall be provided with a LEA-developed/approved calendar. CONTRACTOR herein agrees to observe holidays as specified in the LEA-developed/approved calendar. CONTRACTOR shall provide services pursuant to the LEA-developed/approved calendar; or as specified in the LEA student's IEP and ISA. Unless otherwise specified in the LEA student's IEP and ISA, CONTRACTOR shall provide related services to LEA students on only those days that the LEA student's school of attendance is in session and the LEA student attends school. CONTRACTOR shall bill only for services provided on billable days of attendance as indicated on the LEA calendar unless otherwise specified in the LEA student's IEP and ISA.

26. DATA REPORTING

CONTRACTOR shall agree to provide all data related to student information, billing information, and discipline information (see Section 31) requested by and in the format required by the LEA. It is understood that all NPS/As shall utilize the Special Education Information System (SEIS) or comparable system approved by the LEA and SELPA for all IEP development and progress reporting. Additional progress reporting may be required by the LEA. The LEA shall provide the CONTRACTOR with appropriate software, user training and proper internet permissions to allow adequate access.

The LEA shall provide the CONTRACTORS with approved forms and/or format for such data including but not limited to invoicing, attendance reports and progress reports. The LEA may approve the use of CONTRACTORS provided forms at their discretion.

27. LEAST RESTRICTIVE ENVIRONMENT/DUAL ENROLLMENT

CONTRACTOR and LEA shall follow applicable LEA policies and procedures that support Least Restrictive Environment ("LRE") options and/or Dual Enrollment options for students to have access to the general curriculum and to be educated with their nondisabled peers to the maximum extent appropriate.

CONTRACTOR and LEA shall ensure that LRE placement options are addressed at all IEP team meetings regarding students for whom ISAs have been or may be executed. This shall include IEP team consideration of supplementary aids and services as well as goals and objectives as necessary for placement in the LRE and necessary to enable students to transition to less restrictive settings.

When an IEP team has determined that a student should be transitioned into the public school setting, CONTRACTOR shall assist the LEA in implementing the IEP team's recommendations to support the transition.

28. STATEWIDE ACHIEVEMENT TESTING

When CONTRACTOR is a NPS, per implementation of Senate Bill 484, CONTRACTOR shall administer all Statewide assessments within the California Assessment of Student Performance and Progress ("CAASPP"), Desired Results Developmental Profile ("DRDP"), California Alternative Assessment ("CAA"), achievement and abilities tests (using LEA-authorized assessment instruments), the Fitness Gram, the English Language Proficiency Assessments for California ("ELPAC"), the Alternative English Language Proficiency Assessments for California ("Alternative ELPAC"), and as appropriate to the student, and mandated by LEA pursuant to LEA and state and federal guidelines. LEA must provide CONTRACTOR with all test protocol materials, and test administration training, for CONTRACTOR's qualified staff necessary to help fulfill LEA assessment requirements.

CONTRACTOR is subject to the alternative accountability system developed pursuant to Education Code section 52052, in the same manner as public schools. Each LEA student placed with CONTRACTOR by the LEA shall be tested by qualified staff of CONTRACTOR in accordance with that accountability program. LEA shall provide test administration training to CONTRACTOR'S qualified staff. CONTRACTOR shall attend LEA test training and comply with completion of all coding requirements as required by LEA.

29. LEA MEETINGS AND TRAININGS

CONTRACTOR shall attend LEA meetings for contracting NPS/A when applicable legal mandates, and/or LEA policy and procedures are reviewed, including but not limited to the areas of: curriculum, high school graduation, standards-based instruction, cultural and linguistic needs of students with disabilities, dual enrollment responsibilities, LRE responsibilities, transition services, data collection, IEP System and standardized testing. LEA shall provide CONTRACTOR with reasonable notice of mandated meetings. When CONTRACTOR serves multiple LEAs, CONTRACTOR will inform other contracting LEAs after its completion of mandated instruction on federal or state requirements at a different LEA.

LEA may invite CONTRACTOR to LEA staff development and training to implement new and revised mandated requirements, including, but not limited to, common core curriculum, state testing, and other topics related to the provision of services for LEA students.

30. **POSITIVE BEHAVIOR INTERVENTIONS**

CONTRACTOR shall comply with the requirements of Education Code Section 49000, *et seq.*, 49005, et seq., 56521.1, and 56521.2 regarding positive behavior interventions. LEA students who exhibit serious behavioral challenges must receive timely and appropriate assessments and positive supports and interventions in accordance with state and federal law and its implementing regulations. If the individualized education program ("IEP") team determines that a student's behavior impedes his or her learning or the learning of others, the IEP team is required to consider the use of positive behavioral interventions and supports, and other strategies, to address that behavior, consistent with Section 1414(d)(3)(B)(i) and (d)(4) of Title 20 of the United States Code and associated federal regulations. This could mean that instead of developing a Behavior Intervention Plan ("BIP"), the IEP team may conclude it is sufficient to address the student's behavioral problems through the development of behavioral goals and behavioral interventions to support those goals.

CONTRACTOR shall maintain a written policy pursuant to California Education Code section 56521.1 regarding emergency interventions, including prohibited behavioral interventions, and Behavioral Emergency Reports ("BERs"). CONTRACTOR shall ensure that all of its instructional staff are trained in crisis intervention, emergency procedures, and evidence-based practices and interventions specific to the unique behavioral needs of the CONTRACTOR's pupil population. The training shall be provided within 30 days of employment to new staff who have any contact or interaction with pupils during the schoolday, and annually to all staff who have any contact or interaction with pupils during the schoolday. The CONTRACTOR shall select and conduct the training in accordance with California Education Code section 56366.1 CONTRACTOR shall maintain written records of the training and provide written verification of the training annually and upon request. Training includes certification with a SELPA approved *Crisis Prevention Intervention ("CPI")* or another SELPA recognized and approved crisis intervention program. Documentation of such training shall be made available to LEA upon request.

Emergency interventions are those interventions used with a student during the time they present a serious, dangerous behavior that staff has determined to be present a clear and present danger to self or others, which requires a non-violent physical intervention to protect the safety of student, self, or others that cannot be prevented by use of a less restrictive technique. Pursuant to Education Code section 56521.1, emergency interventions shall not be used as a substitute for a BIP, and instead may only be used to control behavior that is unpredictable and spontaneous. For an emergency intervention to be used, the behavior must pose a clear and present danger of serious physical harm to the individual with exceptional needs, or others. Before emergency interventions may be applied, the behavior must be of the kind that cannot be immediately prevented by a response less restrictive than the temporary application of a technique used to contain the behavior. Emergency intervention shall not be employed longer than necessary to contain the behavior. If a situation requires prolonged use of emergency intervention, staff must seek assistance from the school site administrator or a law enforcement agency.

CONTRACTOR shall complete a BER when an emergency intervention is used; or when a physical intervention has not been used, but an injury or serious property damage has occurred. Personal Safety Techniques may or may not have been used. A BER form must be completed and submitted to the LEA within (1) one school day for administrative action. CONTRACTOR shall also notify the Parent within (1) one school day. If the student's IEP does not include a Behavior Intervention Plan ("BIP") an IEP team shall schedule a meeting to review the BER, determine if there is a necessity for a FunctionalB Assessment ("FBA"), and to determine an interim plan. If applicable, the IEP team shall document the reasons for not conducting the FBA, not developing an interim plan, or both. If the student already has a BIP, and the incident involved a previously unseen or new serious behavior, or if preexisting behavioral interventions in the BIP were ineffective, the IEP team shall meet to review and modify the BIP.

Pursuant to Education Code section 56521.2, CONTRACTOR shall not authorize, order, consent to, or pay for the following interventions, or any other interventions similar to or like the following:

1. any intervention that is designed to, or likely to, cause physical pain, including, but not limited to, electric-shock;

2. an intervention that involves the release of noxious, toxic, or otherwise unpleasant sprays, mists, or substances in proximity to the face of the individual;

3. an intervention that denies adequate sleep, food, water, shelter, bedding, physical comfort, or access to bathroom facilities;

4. an intervention that is designed to subject, used to subject, or likely to subject, the individual to verbal abuse, ridicule, or humiliation, or that can be expected to cause excessive emotional trauma;

5. restrictive interventions that employ a device, material, or objects that simultaneously immobilize all four extremities;

6. prone restraint;

7. locked seclusion, unless it is in a facility otherwise licensed or permitted by state law to use a locked room;

8. an intervention that precludes adequate supervision of the individual;

9. an intervention that deprives the individual of one or more of his or her senses.

CONTRACTOR shall comply with Education Code section 49005.8. Specifically, CONTRACTOR shall not do any of the following:

1. Use seclusion or a behavioral restraint for the purpose of coercion, discipline, convenience, or retaliation.

2. Use locked seclusion, unless it is in a facility otherwise licensed or permitted by state law to use a locked room.

3. Use a physical restraint technique that obstructs a pupil's respiratory airway or impairs the pupil's breathing or respiratory capacity, including techniques in which a staff member places pressure on a pupil's back or places the staff member's body weight against the pupil's torso or back.

4. Use a behavioral restraint technique that restricts breathing, including, but not limited to, using a pillow, blanket, carpet, mat, or other item to cover a pupil's face.

5. Use prone restraint, including but not limited to prone containment.

6. Use a behavioral restraint for longer than is necessary to contain the behavior that poses a clear and present danger of serious physical harm to the pupil or others.

CONTRACTOR shall keep constant, direct observation of a pupil who is in seclusion, which may be through observation of the pupil through a window, or another barrier, through which the educational provider is able to make direct eye contact with the pupil. This observation shall not be through indirect means, including through a security camera or a closed-circuit television.

CONTRACTOR shall afford pupils who are restrained the least restrictive alternative and the maximum freedom of movement, and shall use the least number of restraint points, while ensuring the physical safety of the pupil and others.

If prone restraint techniques are used by CONTRACTOR, a staff member shall observe the pupil for any signs of physical distress throughout the use of prone restraint. Whenever possible, the staff member monitoring the pupil shall not be involved in restraining the pupil.

In the case of a child whose behavior impedes the child's learning or that of others, the IEP team shall consider the use of positive behavioral interventions and supports, and other strategies, to address that behavior, consistent with Section 1414(d)(3)(B)(i) and (d)(4) of Title 20 of the United States Code and associated federal regulations.

All restraint practices must be reviewed and revised when they have an adverse effect on a student and are used repeatedly for an individual child, either on multiple occasions within the same classroom or multiple uses by the same individual. CONTRACTOR shall notify the student's parent/guardian when any type of physical or mechanical restraint or seclusion has been used. Upon the use of any type of physical or mechanical restraint or seclusions of an LEA student, CONTRACTOR shall complete a BER per the reporting and notification requirements listed above.

31. STUDENT DISCIPLINE

CONTRACTOR shall maintain and abide by a written policy for student discipline that is consistent with state and federal law and regulations. Using forms developed by the California Department of Education or as otherwise mutually agreed upon by CONTRACTOR and LEA, CONTRACTOR shall provide LEA, on a monthly basis, a written report of all incidents in which a statutory offense is committed by any LEA student, regardless if it results in a disciplinary action of suspension or expulsion. This includes all statutory offenses as described in Education Codes 48900 and 48915. CONTRACTOR shall also include incidents resulting in the use of a behavioral restraint and/or seclusion even if they were not a result of a violation of Education Code Sections 48900 and 48915.

A NPS/A shall notify the California Department of Education and the local educational agency with which it has a master contract of any pupil-involved incident at the school or agency in which law enforcement was contacted. This notification shall be provided in writing, no later than one business day after the incident occurred.

When CONTRACTOR seeks to remove a LEA student from his/her current educational placement for disciplinary reasons, CONTRACTOR shall within 24 hours submit a written discipline report to the LEA. Written discipline reports shall include, but not be limited to: the LEA student's name; the time, date, and description of the misconduct; the disciplinary action taken by CONTRACTOR; and the rationale for such disciplinary action. A copy of the LEA student's behavior plan, if any, shall be submitted with the written discipline report. CONTRACTOR and LEA agree to participate in a manifestation determination at an IEP meeting held by the LEA no later than the tenth (10th) day of suspension. LEA and CONTRACTOR shall notify and invite appropriate members to the IEP team meeting where the manifestation determination will be made.

CONTRACTOR will report discipline data (Education Code Sections 48900 and 48915) according to district requirements for reporting.

32. **IEP TEAM MEETINGS**

An IEP team meeting shall be convened at least annually to evaluate: (1) the educational progress of each student placed with CONTRACTOR, including all state assessment results pursuant to the requirements of California Education Code section 52052; (2) whether or not the needs of the student continue to be best met at the nonpublic school; and (3) whether changes to the student's IEP are necessary, including whether the student may be transitioned to a public school setting (California Education Code sections 56366 (a) (2) (B) (i) and (ii)). Pursuant to California Education Code section 56345(b) (4), if an LEA student is to be transferred from a NPS setting into a regular class setting in a public school for any part of the school day, the IEP team shall document, if appropriate, a description of activities provided to integrate the student into the regular education program, including the nature of each activity as well as the time spent on the activity each day or week and a description of the activities provided to support the transition of the student from the special education program into the regular education program. Each LEA student shall be allowed to provide confidential input to any representative of his or her IEP team pursuant to California Education Code Section 56341.5. Except as otherwise provided in the Master Contract, CONTRACTOR and LEA shall participate in all IEP team meetings regarding LEA students for whom ISAs have been or may be executed. At any time during the term of this Master Contract, the parent, the CONTRACTOR or the LEA may request a review of the student's IEP, subject to all procedural safeguards required by law, including reasonable notice given to, and participation of, the CONTRACTOR in the meeting. In preparation for IEPs or upon request with 30 days prior written notice CONTRACTOR shall provide to LEA academic assessments and written progress reports by service providers. It is understood that provider attendance at an IEP team meeting are part of CONTRACTOR's professional responsibility and is not a billable service under this Master Contract.

Every effort shall be made to schedule IEP team meetings at a time and place that is mutually convenient to parents, CONTRACTOR and LEA. If no parent or guardian can attend the meeting, the CONTRACTOR with support of LEA shall use other methods to ensure parent or guardian participation, including individual or conference telephone calls. In the event a

parent or guardian cannot attend the IEP team meeting either physically or through other methods, a meeting may be conducted without a parent or guardian in attendance. If the CONTRACTOR or LEA is unable to convince the parent or guardian that he or she should attend, CONTRACTOR shall maintain a record in the LEA's special education software (if available) of its attempts to arrange a mutually agreed-upon time and place. The CONTRACTOR and LEA shall also take any action necessary to ensure that the parent or guardian understands the proceedings at a meeting, including arranging for an interpreter. Upon completion of the IEP, LEA will notify the CONTRACTOR, as soon as possible, once written consent for implementation of the IEP has been obtained.

Changes in any LEA student's educational program, including instruction, services, or instructional setting, provided under this Master Contract may only be made on the basis of revisions to the student's IEP or ISA. In the event that the CONTRACTOR believes the student requires a change of placement, the CONTRACTOR may request a review of the LEA student's IEP for the purposes of consideration of a change in the student's placement. The LEA student is entitled to remain in the last agreed upon and implemented placement unless parent agrees otherwise or an interim alternative educational placement is deemed lawful and appropriate by LEA or OAH consistent with Section 1415 (k)(1)(7) of Title 20 of the United States Code.

33. SURROGATE PARENTS, FOSTER YOUTH, AND HOMELESS YOUTH

Pursuant to California Government Code section 7579.5, LEA and CONTRACTOR shall comply with state and federal laws and regulations regarding surrogate parent assignments. Surrogate parents shall serve as the child's parent and have all the rights relative to the student's education that a parent has under the Individual with Disabilities Education Act pursuant to *20 USC 1414-1482 and 34 CFR 300.1-300.756.*

A pupil in foster care or homeless shall be defined pursuant to California Education Code section 51225.2. The LEA shall annually notify the CONTRACTOR who the LEA has designated as the educational liaison for foster and homeless children. When a pupil in foster care, or a pupil that is a homeless child, is enrolled in a nonpublic school by the LEA any time after the completion of the pupil's second year of high school, the CONTRACTOR shall schedule the pupil in courses leading towards graduation based on the diploma requirements of the LEA unless otherwise notified in writing by the LEA that the pupil is utilizing the exemption provided by California Education Code section 51225.1. The determination of whether the exemption in Section 51225.1 is available for the pupil shall be made, and communicated to the pupil or their educational rights holder, by the LEA.

34. DUE PROCESS PROCEEDINGS

CONTRACTOR shall fully participate in special education due process proceedings including mediations and hearings, as requested by LEA. Participation further includes the willingness to make CONTRACTOR's staff available for witness preparation and testimony as is necessary to facilitate a due process hearing. CONTRACTOR shall also fully participate in the investigation and provision of documentation related to any complaint filed with the State of California, the Office of Civil Rights, or any other state and/or federal governmental body or agency.

35. COMPLAINT PROCEDURES

CONTRACTOR shall maintain and adhere to its own written procedures for responding to parent complaints. These procedures shall include annually notifying and providing parents of LEA students with appropriate information (including complaint forms) for the following: (1) Uniform Complaint Procedures pursuant to Title 5 of the California Code of Regulations sections 4600 *et seq.*; (2) Nondiscrimination policy pursuant to Title 5 of the California Code of Regulations section 4960 (a); (3) Sexual Harassment Policy, California Education Code 231.5 (a) (b) (c); (4) Title IX Student Grievance Procedure, Title IX 106.8 (a) (d) and 106.9 (a); and (5) Notice of Privacy Practices in compliance with Health Insurance Portability and Accountability Act ("HIPPA"). CONTRACTOR shall immediately notify LEA of any complaints filed against it related to LEA students and provide LEA with all documentation related to the complaints and/or its investigation of complaints, including any and all reports generated as a result of an investigation.

In the event any CONTRACTOR employee, working on public school campus, alerts CONTRACTOR or LEA of a concern, CONTRACTOR and LEA will coordinate efforts to respond.

36. STUDENT PROGRESS REPORTS/REPORT CARDS AND ASSESSMENTS

Unless LEA requests in writing that progress reports be provided on a monthly basis, CONTRACTOR shall provide to parents at least four written progress reports/report cards, per year, pursuant to LEA policy. A copy of the progress reports/report cards shall be maintained at the CONTRACTOR's place of business and made available upon request of LEA and/or the LEA student's parent(s) quarterly.

CONTRACTOR shall gather data necessary to complete an evaluation of the LEA student's present levels of performance and progress towards IEP goals and objectives of the LEA student ten (10) school days prior to the LEA student's annual or triennial review IEP team meeting.

CONTRACTOR is responsible for all assessment costs regarding the updating of goals and objectives, progress reporting and the development of present levels of performance. All other assessments shall be provided by the LEA unless the LEA specifies in writing a request for CONTRACTOR assessments including the approved timelines, conditions and fees. Such assessment costs may be added to the ISA and/or approved separately by the LEA at its sole discretion.

When academic assessments are required to prepare for triennial or re-evaluation IEPs, upon request CONTRACTOR may assist LEA in using a mutually agreed upon standardized academic achievement test to assess diploma track students, or a mutually agreed upon standardized alternative assessment for students on alternative curriculum.

Supporting documentation such as test protocols and data collection shall be made available to LEA upon request. CONTRACTOR shall not charge the LEA student's parent(s) or LEA for the provision of progress reports, report cards, and/or any interviews or meetings.

37. GRADES, HIGH SCHOOL COURSE CREDITS, & TRANSCRIPTS

When CONTRACTOR is a NPS, CONTRACTOR is responsible for assigning grades for any course of instruction taught at the NPS. The grades determined by the pupil's teacher, in the absence of clerical or mechanical mistake, fraud, bad faith, or incompetency, shall be final and consistent with the provisions specified in EC Section 49066. The grades each pupil receives in all courses of instruction taught by the NPS shall be reported to the parents and the LEA on a quarterly basis. Consistent with the LEA, should it become evident to the NPS the pupil is in danger of failing a course, the CONTRACTOR must initiate a parent conference, and the LEA representative must be invited to attend.

Pupils enrolled in high school during the 2020-2021 academic year may request a Pass or No Pass grade as permitted in EC Section 49066.5, which may be reflected on the student's transcript and shall not negatively affect the pupil's grade point average.

When CONTRACTOR is a NPS, CONTRACTOR shall prepare cumulative transcripts, based on its own grades and report cards and transcripts received from other schools for each LEA high school student. CONTRACTOR provide cumulative transcripts upon the request of the LEA or upon LEA student transfer, for LEA students in grades 9 through 12 inclusive for evaluation of progress toward completion of diploma requirements.

38. STUDENT CHANGE OF RESIDENCE

Within five (5) school days from the date CONTRACTOR becomes aware of a LEA student's change of residence, CONTRACTOR shall notify LEA, in writing, of the LEA student's change of residence. Upon enrollment, CONTRACTOR shall notify parents in writing of their obligation to notify LEA of the LEA student's change of residence. CONTRACTOR shall maintain, and provide upon request by LEA, documentation of such notice to parents.

If CONTRACTOR had knowledge or should reasonably have had knowledge of the LEA student's change of residence to a residence outside of LEA's service boundaries and CONTRACTOR fails to follow the procedures specified in this provision, LEA shall not be responsible for the costs of services delivered following the LEA student's change of residence.

39. WITHDRAWAL OF LEA STUDENT FROM PROGRAM

CONTRACTOR shall report electronically or in writing to the LEA within 5 business days when a LEA student is withdrawn without prior notice from school and/or services, including student's change of residence to a residence outside of LEA service boundaries, and student's discharge against professional advice from a Nonpublic Schools/Residential Treatment Center ("NPS/RTC").

40. PARENT ACCESS

CONTRACTOR shall provide for reasonable parental access to LEA students and all facilities including, but not limited to, the instructional setting, recreational activity areas, meeting rooms and LEA student living quarters. CONTRACTOR shall comply with any known court orders regarding parental visits and access to LEA students.

CONTRACTORS operating programs with associated with a NPS/RTC shall cooperate with a parent's reasonable request for LEA student therapeutic visits in their home or at the NPS/RTC. CONTRACTOR shall require that parents obtain prior written authorization for therapeutic visits from the CONTRACTOR and the LEA at least thirty (30) days in advance. CONTRACTOR shall facilitate all parent travel and accommodations and for providing travel information to the parent as appropriate. Payment by LEA for approved travel-related expenses shall be made directly through the LEA, consistent with LEA procedures.

41. **SERVICES, SUPERVISION AND PROFESSIONAL CONDUCT**

If CONTRACTOR provides services on LEA public school campuses, CONTRACTOR shall comply with Penal Code sections 627.1 *et. seq.*, and LEA procedures regarding visitors to school campuses specified by LEA policy, and the procedures of the campus being visited. CONTRACTOR shall be responsible for the purchase and provision of the supplies and assessment tools necessary to implement the provision of their contracted services on LEA public school campuses.

For services provided on a public school campus, sign in/out procedures shall be followed along with all other procedures for being on campus consistent with school and LEA policy. It is understood that the public-school credentialed classroom teacher is responsible for the educational program and all nonpublic agency service providers shall work collaboratively with and not replace the classroom teacher, who shall remain in charge of the instructional program.

CONTRACTORS providing nonpublic agency services outside of the student's school as specified in the IEP shall ensure that at least one parent of the child or an adult caregiver with written and signed authority to make decisions in an emergency is present during provision of services. The names of any adult caregiver other than the parent shall be provided to the LEA prior to the start of any home-based services, including written and signed authorization in emergency situations. The adult caregiver cannot also be an employee or volunteer associated with the NPS/NPA service provider. All significant problems and/or concerns (e.g., law enforcement, medical response, BER, any behavioral incident that could result in need for IEP) reported by CONTRACTOR to parents or guardians, or from parent or guardian to CONTRACTOR, in either verbal or written form, shall be reported to the LEA.

It is understood, that all employees, subcontractors and volunteers of any certified nonpublic school or agency shall adhere to customary professional standards when providing services. All practices shall be within the scope of professional responsibility as defined in the professional code of conduct for each profession. Reports regarding student progress shall be consistent with the provision of this contract.

42. **LICENSED CHILDREN'S INSTITUTION ("LCI") AND RESIDENTIAL TREATMENT CENTER ("RTC") CONTRACTORS**

If CONTRACTOR is a LCI, CONTRACTOR shall adhere to all legal requirements regarding educational placements for LCI students as stated in Education Code 56366 (a) (2) (C), 56366.9 (c) (1), Health and Safety Code section 1501.1and any other applicable laws and/or regulations, including LEA guidelines or procedures. An LCI shall not require that a pupil be placed in its NPS as a condition of being placed in its residential facility.

If CONTRACTOR is a NPS/RTC, CONTRACTOR shall adhere to all legal requirements under the Individuals with Disabilities Education Act (IDEA), 20 U.S.C. section 1400 et seq. including the federal regulations 34 C.F.R section 300 et seq. and Education Code section 56000 et seq. including Title 5 of the California Code of Regulations section 3000 et seq.. CONTRACTOR shall comply with all monitoring requirements set forth in Section 44 below.

Unless placement is made pursuant to an Office of Administrative Hearings order or a lawfully executed agreement between LEA and parent, or when the Contractor is directed in writing or email by the LEA to begin the provision of services prior to the receipt of a signed IEP, LEA is not responsible for the costs associated with nonpublic school placement until the date on which an IEP team meeting is convened, the IEP team determines that a nonpublic school placement at the NPS associated with an RTC/LCI is appropriate, and the IEP is signed by the LEA student's parent or another adult with educational decision-making rights.

In addition to meeting the certification requirements of the State of California, a CONTRACTOR that operates a program outside of this State and serves a student from this LEA shall be certified or licensed by that state to provide special education and related services and designated instruction and related services to pupils under the federal Individuals with Disabilities Education Act (20 U.S.C. Sec. 1400 et seq.) and shall be certified or licensed by the state to provide nonmedical care room and board, clinical services, or short-term residential therapeutic programs, as applicable to the facility type; and shall submit to all monitoring requirements specific to out-of-state NPS contractors set forth in Education Code 56366.1 and Section 44 below.

43. STATE MEAL PROGRAM MANDATE

When CONTRACTOR is a NPS, CONTRACTOR and LEA shall satisfy the mandates of the State Meal Program under California Education Code sections 49530, 49530.5 and 49550.

LEA, at its sole discretion, may elect to directly provide meals to CONTRACTOR for distribution to LEA students at the nonpublic school on its own or by another local school district.

44. MONITORING

CONTRACTOR shall participate in any LEA or CDE compliance review, if applicable, to be conducted as aligned with the CDE Onsite Review and monitoring cycle in accordance with California Education Code section 56366.1(j) and (k) as applicable. This review will address programmatic aspects of the NPS, compliance with relevant state and federal regulations, and Master Contract compliance, as well as pupil perceptions, progress, and concerns, as required by law. CONTRACTOR shall conduct any follow-up or corrective action procedures related to review findings.

When CONTRACTOR is a nonpublic school, the LEA or its designated SELPA shall conduct at least one onsite monitoring visit at CONTRACTOR's school campus during each school year that an LEA student is enrolled under the terms of this master contract. The monitoring visit shall include, but is not limited to, a review of services provided to LEA's students through ISAs between the LEA and the NPS, a review of students' progress toward the goals set in their individualized education program, a review of progress students are making toward the goals in their behavioral intervention plan (if applicable), an observation of LEA students during

instruction, a walkthrough of the facility, and, for a pupil placed in an NPS located outside of California, an in-person interview with the pupil, in a manner consistent with the pupil's IEP, to evaluate the pupil's health and safety. The LEA or SELPAshall report the findings resulting from the monitoring visit to the CDE using the "Local Educational Agency Onsite Visit for Nonpublic School" form developed and published by the department on CDE's internet website, including additional findings required by the CDE specific to the NPS located outside California, if applicable, within 60 calendar days of the onsite visit.

If CONTRACTOR is an NPS located outside of California, the LEA or SELPA shall conduct at least quarterly check-ins with a pupil placed by the LEA pursuant to a master contract, through an unmonitored telephone call, in a manner consistent with the pupil's IEP.

The LEA (or SELPA) shall conduct an onsite visit to the NPS before placement of a pupil if the LEA does not have any pupils enrolled at the school at the time of placement.

CONTRACTOR shall allow LEA representatives, without prior notice, access to its facilities for additional periodic monitoring of each LEA student's instructional program and shall be invited to participate in the formal review of each student's progress. LEA shall have access to observe each LEA student at work, observe the instructional setting, interview CONTRACTOR employees and student(s) placed by the LEA, and review each LEA student's records and progress. Such access shall include unannounced monitoring visits. When making site visits, LEA shall initially report to CONTRACTOR's site administrative office.

If CONTRACTOR is also a LCI and/or NPS/RTC, LEA shall annually evaluate whether CONTRACTOR is in compliance with Education Code section 56366.9 and Health and Safety Code section 1501.1(b).

The State Superintendent of Public Instruction ("Superintendent") shall monitor CONTRACTOR'S facilities, the educational environment, and the quality of the educational program, including the teaching staff, the credentials authorizing service, the standards-based core curriculum being employed, and the standard-focused instructional materials used on a three-year cycle, as follows: (1) CONTRACTOR shall complete a self-review in year one; (2) the Superintendent shall conduct an onsite review in year two; and (3) the Superintendent shall conduct a follow-up visit in year three.

CONTRACTOR shall participate in any LEA and CDE compliance review, if applicable, to be conducted as aligned with the CDE Onsite Review and monitoring cycle in accordance with California Education Code section 56366.1(j). This review will address programmatic aspects of the Nonpublic School, compliance with relevant state and federal regulations, and Master Contract compliance. CONTRACTOR shall conduct any follow-up or corrective action procedures related to review findings.

CONTRACTOR understands that LEA reserves the right to institute a program audit with or without cause. The program audit may include, but is not limited to, a review of core compliance areas of health and safety; curriculum/instruction; related services; and contractual, legal, and procedural compliance.

When CONTRACTOR is a nonpublic school, CONTRACTOR shall collect all applicable data and prepare a School Accountability Report Card in accordance with California Education Code sections 33126 and 56366(a)(9).

PERSONNEL

45. PERSONNEL

CONTRACTOR understands that the LEA is required to report all monies paid under this agreement to the local county office of education or as otherwise required by law. The LEA shall have no duty to monitor wages of CalSTRS or PERS retirees to ensure that their earnings are within the limitation prescribed by these or any other retirement system. LEA is not liable if CONTRACTOR'S agent(s), officer(s) or employee(s) exceeds a retirement system's earnings limitation and is reinstated to employment or required to repay retirement benefits.

46. CLEARANCE REQUIREMENTS

CONTRACTOR shall comply with the requirements of California Education Code sections 44237, 35021.1, 35021.2, and 56366.1 including, but not limited to: obtaining clearance from the California Department of Justice (hereinafter referred to as "CDOJ") for CONTRACTOR's employees, volunteers, subcontractors, related outside agency service provider's staff or any person with regular student contact employed directly or indirectly by it prior to service with any LEA student. CONTRACTOR hereby agrees that CONTRACTOR's employees, volunteers, subcontractors or any person employed directly or indirectly (such as Department of Probation, Department of Children and Family Services, and/or Los Angeles Department of Children's Services) by it shall not come in contact with LEA students, in person or virtually, until CDOJ clearance is ascertained. CONTRACTOR shall certify in writing to LEA that none of its employees, and volunteers, subcontractors or any person employed directly or indirectly by it who may come into contact with LEA students have been convicted of a violent or serious felony as those terms are defined in California Education Code section 44237(h), unless despite the employee's conviction of a violent or serious felony, he or she has met the criteria to be eligible for employment pursuant to California Education Code section 44237 (i) or (j). . Contractor shall certify to LEA that they have successful background checks and enrolled in subsequent arrest notification service for all employees who may come into contact with students. In addition, CONTRACTOR shall make a request for subsequent arrest service from the CDOJ as required by California Penal Code section 11105.2.

Notwithstanding the restrictions on sharing and destroying criminal background check information, CONTRACTOR, upon demand, shall make available to the State Superintendent of Instruction evidence of a successful criminal background check clearance and enrollment in subsequent arrest notice service, as provided, for each owner, operator, and employee of the nonpublic school or agency. CONTRACTOR is required to retain the evidence, as specified, for all staff, including those licensed or credentialed by another state agency. Background clearances and proof of subsequent arrest notification service as required by California Penal Code section 11105.2 for all staff shall be provided upon request.

47. STAFF QUALIFICATIONS

CONTRACTOR shall ensure that all individuals employed, contracted, and/or otherwise hired by CONTRACTOR to provide classroom and/or individualized instruction or related services hold a license, certificate, permit, or other document equivalent to that which staff in a public school are required to hold in the service rendered consistent with Education Code section 56366.1(n)(1) and are qualified pursuant to Title 34 of the Code of Federal Regulations sections 200.56 and 200.58, and Title 5 of the California Code of Regulations sections 3001(y), 3064

and 3065. Such qualified staff may only provide related services within the scope of their professional license, certification or credential and ethical standards set by each profession and not assume responsibility or authority for another related services provider or special education teacher's scope of practice.

CONTRACTOR shall ensure that all staff are appropriately credentialed to provide instruction and services to students with disabling conditions placed in their program/school through documentation provided to the CDE (5 CCR 3064 (a)).

When CONTRACTOR is a nonpublic school, an appropriately qualified person shall serve as curricular and instructional leader, and be able to provide leadership, oversight and professional development.

The administrator of the NPS holds or is in the process of obtaining one of the following: (A) An administrative credential granted by an accredited postsecondary educational institution and two years of experience with pupils with disabilities. (B) A pupil personnel services credential that authorizes school counseling or psychology. (C) A license as a clinical social worker issued by the Board of Behavioral Sciences. (D) A license in psychology regulated by the Board of Psychology. (E) A master's degree issued by an accredited postsecondary institution in education, special education, psychology, counseling, behavioral analysis, social work, behavioral science, or rehabilitation. (F) A credential authorizing special education instruction and at least two years of experience teaching in special education before becoming an administrator. (G) A license as a marriage and family therapist certified by the Board of Behavioral Sciences. (H) A license as an educational psychologist issued by the Board of Behavioral Sciences. (I) A license as a professional clinical counselor issued by the Board of Behavioral Sciences. (California Education Code Section 56366.1 (a)(5))

CONTRACTOR shall comply with personnel standards and qualifications regarding instructional aides and teacher assistants respectively pursuant to Federal requirements and California Education Code sections 45340 *et seq.* Specifically, all paraprofessionals, including, but not limited to, instructional aides and teacher assistants, employed, contracted, and/or otherwise hired or subcontracted by CONTRACTOR to provide classroom and/or individualized instruction or related services, shall possess a high school diploma (or its recognized equivalent) and at least one of the following qualifications: (a) completed at least 2 years of study at an institution of higher education; or (b) obtained an associate's (or higher) degree; or (3) met a rigorous standard of quality and can demonstrate, through a formal state or local assessment (i) knowledge of, and the ability to assist in instructing, reading, writing, and mathematics; or (ii) knowledge of, and the ability to assist in instructing, reading readiness, writing readiness, and mathematics readiness, as appropriate. CONTRACTOR shall comply with all laws and regulations governing the licensed professions, including but not limited to, the provisions with respect to supervision.

In addition to meeting the certification requirements of the State of California, a CONTRACTOR that operates a program outside of this State and serving a student by this LEA shall be certified or licensed by that state to provide special education and related services and designated instruction and related services to pupils under the federal Individuals with Disabilities Education Act (20 U.S.C. Sec. 1400 et seq.).

48. VERIFICATION OF LICENSES, CREDENTIALS AND OTHER DOCUMENTS

CONTRACTOR shall monitor the status of licenses, credentials, certifications, permits and/or other documents for all individuals employed, contracted, and/or otherwise hired by CONTRACTOR.

CONTRACTOR shall make available all staff information required to document that CONTRACTOR's staff are authorized to provide special education and/or related services. CONTRACTOR shall ensure that all licenses, credentials, permits, certifications or other documents which entitle the holder to provide special education and/or related services by individuals employed, contracted, and/or otherwise hired by CONTRACTOR are current and valid with the California Commission on Teacher Credentialing (CCTC) and/or other licensing authority. The LEA shall not approve payment to CONTRACTOR for special education and/or related services specified on a register of daily attendance or monthly service log signed by a staff member whose information is not made available.

CONTRACTOR shall notify LEA and CDE in writing within forty-five (45) days when personnel changes occur which may affect the provision of special education and/or related services to LEA students. CONTRACTOR shall notify LEA within forty-five (45) days if any such licenses, certifications or waivers are expired, suspended, revoked, rescinded, challenged pursuant to an administrative or legal complaint or lawsuit, or otherwise nullified during the effective period of this Master Contract. The LEA shall not be obligated to pay for any services provided by a person whose such licenses, certifications or waivers are expired, suspended, revoked, rescinded, or otherwise nullified during the period during which such person is providing services under this Master Contract. Failure to notify the LEA and CDE of any changes in credentialing/licensed staff may result in suspension or revocation of CDE certification and/or suspension or termination of this Master Contract by the LEA.

49. STAFF ABSENCE

When CONTRACTOR is a nonpublic school and CONTRACTOR's classroom teacher is absent, CONTRACTOR shall provide an appropriately credentialed substitute teacher in the absent teacher's classroom in accordance with California Education Code section 56061. CONTRACTOR shall provide upon request to LEA documentation of substitute coverage. Substitute teachers shall remain with their assigned class during all instructional time. LEA shall not be responsible for payment for instruction and/or services when an appropriately credentialed substitute teacher is not provided.

When CONTRACTOR is a nonpublic agency and/or related services provider, and CONTRACTOR's service provider is absent, CONTRACTOR shall provide a qualified (as defined in section seven (7) of this agreement and as determined by LEA) substitute, unless LEA provides appropriate coverage in lieu of CONTRACTOR's service providers. LEA will not pay for services unless a qualified substitute is provided and/or CONTRACTOR provides documentation evidencing the provision of "make-up" services by a qualified service provider within thirty (30) calendar days from the date on which the services should have been provided. CONTRACTOR shall not "bank" or "carry over" make up service hours under any circumstances, unless otherwise agreed to in writing by CONTRACTOR and LEA.

HEALTH AND SAFETY MANDATES

50. HEALTH AND SAFETY

CONTRACTOR shall comply with all applicable federal, state, local, and LEA laws, regulations, ordinances, and policies, regarding student and employee health and safety. CONTRACTOR shall comply with the requirements of California Education Code sections 35021 *et. seq.* and 49406 regarding the examination of CONTRACTOR's employees and volunteers for tuberculosis. CONTRACTOR shall ensure and provide upon request to LEA documentation for each individual volunteering, employed, contracted, and/or otherwise hired by CONTRACTOR of such compliance before an individual comes in contact with an LEA student.

CONTRACTOR shall comply with OSHA Blood Borne Pathogens Standards, 29 Code of Federal Regulations section 1910.1030, when providing medical treatment or assistance to a LEA student. CONTRACTOR further agrees to provide annual training regarding universal health care precautions and to post required notices in areas designated in the California Health and Safety Code. In addition, contracting nonpublic schools shall comply with Education Code sections 51934 and 51935 when providing HIV/AIDS Prevention education to secondary students.

51. TRAVEL

No student placed by this LEA may travel out of the country with the CONTRACTOR.

52. FACILITIES AND FACILITIES MODIFICATIONS

CONTRACTOR shall provide special education and/or related services to LEA students in facilities that comply with all applicable federal, state, and local laws, regulations, and ordinances related, but not limited to: disability access; fire, health, sanitation, and building standards and safety; fire warning systems; zoning permits; and occupancy capacity. CONTRACTOR shall ensure that facilities are adequate to provide LEA students with an environment, which meets all pertinent health and safety regulations. When CONTRACTOR is a nonpublic school, CONTRACTOR shall conduct fire drills as required by Title 5 California Code of Regulations section 550. CONTRACTOR shall be responsible for any structural changes and/or modifications to CONTRACTOR's facilities as required to comply with applicable federal, state, and local laws, regulations, and ordinances. Failure to notify the LEA and CDE, a minimum of 45 days in advance, of any major modification or relocation of facilities may result in the suspension or revocation of CDE certification and/or suspension or termination of this Master Contract by the LEA, per California Education Code Section 56366.4. Additionally, CONTRACTOR agrees to notify LEA and SELPA when a school applies for relocation.

53. ADMINISTRATION OF MEDICATION

CONTRACTOR shall comply with the requirements of California Education Code section 49423 when CONTRACTOR serves a LEA student that is required to take prescription and/or over-the-counter medication during the school day. CONTRACTOR may designate personnel to assist the LEA student with the administration of such medication after the LEA student's parent(s) provides to CONTRACTOR: (a) a written statement from a physician detailing the

type, administration method, amount, and time schedules by which such medication shall be taken; and (b) a written statement from the LEA student's parent(s) granting CONTRACTOR permission to administer medication(s) as specified in the physician's statement. CONTRACTOR shall maintain, and provide to LEA upon request, copies of such written statements. CONTRACTOR shall maintain a written log for each LEA student to whom medication is administered. Such written log shall specify the LEA student's name; the type of medication; the date, time, and amount of each administration; and the name of CONTRACTOR's employee who administered the medication. CONTRACTOR maintains full responsibility for assuring appropriate staff training in the administration of LEA student's medication consistent with student's physician's written orders. Any change in medication type, administration method, amount or schedule must be authorized by both a licensed physician and parent.

54. INCIDENT/ACCIDENT REPORTING

CONTRACTOR shall submit within 24 hours electronically, accident or incident reports to LEA. CONTRACTOR shall properly submit required accident or incident reports per LEA policy.

55. CHILD ABUSE REPORTING

CONTRACTOR shall annually train all staff members, including volunteers, so that they are familiar with and agree to adhere to its own child and dependent adult abuse reporting obligations and procedures as specified in California Penal Code section 11164 et seq. and Education Code 44691. To protect the privacy rights of all parties involved (i.e, reporter, child and alleged abuser), reports will remain confidential as required by law and professional ethical mandates. CONTRACTOR shall ensure that all nonpublic school and agency providers, volunteers, subcontractors or any person employed directly or indirectly by it, are trained on the Suspected Child Abuse Reporting requirements, at the beginning of each school year. A written assurance acknowledging the legal requirements of such reporting and verification of staff adherence to such reporting shall be submitted to the LEA upon request.

56. SEXUAL HARASSMENT

CONTRACTOR shall have a Sexual and Gender Identity harassment policy that clearly describes the kinds of conduct that constitutes sexual harassment and that is prohibited by the CONTRACTOR's policy, as well as federal and state law. The policy should include procedures to make complaints without fear of retaliation, and for prompt and objective investigations of all sexual harassment complaints. CONTRACTOR further agrees to provide annual training to all employees regarding the laws concerning sexual harassment and related procedures pursuant to Government Code 12950.1.

57. REPORTING OF MISSING CHILDREN

CONTRACTOR assures LEA that all staff members, including volunteers, independent contractors, and subcontractors or any person employed directly or indirectly by it are familiar with and agree to adhere to requirements for reporting missing children as specified in California Education Code section 49370. A written statement acknowledging the legal requirements of such reporting and verification of staff adherence to such reporting shall be

properly submitted to the LEA. The written statement shall be submitted as specified by the LEA.

FINANCIAL

58. ENROLLMENT, CONTRACTING, SERVICE TRACKING, ATTENDANCE REPORTING, AND BILLING PROCEDURES

CONTRACTOR shall assure that the NPS/A has the necessary personnel and financial resources to provide an appropriate education for the students enrolled and will distribute those resources in such a manner to implement the IEP for each and every LEA student. CONTRACTOR shall use the codes and rates as delineated in section 61 and Exhibit A (Rate Schedule) when preparing ISA's and submitting invoice documentation.

CONTRACTOR shall comply with all LEA procedures concerning enrollment, contracting, attendance reporting, service tracking and billing including requirements of electronic billing. CONTRACTOR shall be paid for the provision of special education and/or related services specified in the LEA student's IEP and ISA. All payments by LEA shall be made in accordance with the terms and conditions of this Master Contract and will be governed by all applicable federal and state laws.

CONTRACTOR shall maintain separate registers for the basic education program, each related service, and services provided by instructional assistants, behavior intervention aides and bus aides. Original attendance forms (i.e., roll books for the basic education program service tracking documents and notes for instructional assistants, behavioral intervention aides, bus aides, and each related service) shall be completed by the actual service provider whose signature shall appear on such forms and shall be available for review, inspection, or audit by LEA during the effective period of this contract and for a period of five (5) years thereafter. CONTRACTOR shall verify the accuracy of minutes of reported attendance that is the basis of services being billed for payment.

CONTRACTOR shall submit invoices and related documents to LEA for payment, for each calendar month when education or related services were provided. Invoices and related documents shall be properly submitted, on a LEA form with an electronic signature if required.

Initial invoices shall be submitted no later than thirty (30) days after the end of the attendance accounting period in which the services were rendered. LEA shall make payment to CONTRACTOR based on the number of billable days of attendance and hours of service at rates specified in this contract within forty-five (45) days of LEA's receipt of properly submitted invoices prepared and submitted as specified in California Education Code section 56366.5. CONTRACTOR shall correct deficiencies and submit rebilling/billing invoices no later than thirty (30) calendar days after the invoice is returned by LEA. LEA shall pay properly submitted re-billing invoices no later than forty-five (45) days after the date a completely corrected re-billing invoice is received by LEA.

In no case should initial payment claim submission or initial rebillings/retroactive billing for any Master Contract fiscal year (July through June) extend beyond sixty (60) days after the close of the fiscal year. Invoices received for a closed fiscal year beyond the sixty (60) day period will be returned unpaid and should be removed from the Nonpublic School or Agency's

accounts receivable. Exceptions to the above must be requested in writing and approved by the Special Education Administrator.

59. RIGHT TO WITHHOLD PAYMENT

LEA may withhold payment to CONTRACTOR when: (a) CONTRACTOR has failed to perform, in whole or in part, under the terms of this contract; (b) CONTRACTOR was overpaid by LEA as determined by inspection, review, and/or audit of its program, work, and/or records; (c) CONTRACTOR has failed to provide supporting documentation with an invoice, as required by EC 56366(c)(2); (d) education and/or related services are provided to students by personnel who are not appropriately credentialed, licensed, or otherwise qualified; (e) LEA has not received prior to school closure or contract termination, all documents concerning one or more students enrolled in CONTRACTOR's educational program; (f) CONTRACTOR fails to confirm a student's change of residence to another LEA or confirms the change of residence to another LEA, but fails to notify LEA within five (5) days of such confirmation; or (g) CONTRACTOR receives payment from Medi-Cal or from any other agency or funding source for a service provided to a student. It is understood that no payments shall be made for any invoice that is not received by six months following the close of the prior fiscal year, for services provided in that year.

Final payment to CONTRACTOR in connection with the cessation of operations and/or termination of a Master Contract will be subject to the same documentation standards described for all payment claims for regular ongoing operations. In addition, final payment may be withheld by the LEA until completion of a review or audit, if deemed necessary by the LEA. Such review or audit will be completed within ninety (90) days. The final payment may be adjusted to offset any previous payments to the CONTRACTOR determined to have been paid in error or in anticipation of correction of documentation deficiencies by the CONTRACTOR that remain uncorrected.

The amount which may be withheld by LEA with respect to each of the subparagraphs of the preceding paragraph are as follows: (a): the value of the service CONTRACTOR failed to perform; (b): the amount of overpayment; (c): the entire amount of the invoice for which satisfactory documentation has not been provided by CONTRACTOR (d): the amount invoiced for services provided by the individual not appropriately credentialed, licensed, or otherwise qualified; (e): the proportionate amount of the invoice related to the applicable pupil for the time period from the date of the violation occurred and until the violation is cured; or (f): the amount paid to CONTRACTOR by Medi-Cal or another agency or funding source for the service provided to the student.

If LEA determines that cause exists to withhold payment to CONTRACTOR, LEA shall, within ten (10) business days of this determination, provide to CONTRACTOR written notice that LEA is withholding payment. Such notice shall specify the basis or bases for LEA's withholding payment and the amount to be withheld. Within thirty (30) days from the date of receipt of such notice, CONTRACTOR shall take all necessary and appropriate action to correct the deficiencies that form the basis for LEA's withholding payment or submit a written request for extension of time to correct the deficiencies. Upon receipt of CONTRACTOR's written request showing good cause, LEA shall extend CONTRACTOR's time to correct deficiencies (usually an additional thirty (30) days), otherwise payment will be denied.

If after subsequent request for payment has been denied and CONTRACTOR believes that

payment should not be withheld, CONTRACTOR shall send written notice to LEA specifying the reason it believes payment should not be withheld. LEA shall respond to CONTRACTOR's notice within thirty (30) business days by indicating that a warrant for the amount of payment will be made or stating the reason LEA believes payment should not be made. If LEA fails to respond within thirty (30) business days or a dispute regarding the withholding of payment continues after the LEA's response to CONTRACTOR's notice, CONTRACTOR may invoke the following escalation policy.

After forty-five (45) business days: The CONTRACTOR may notify the Authorized LEA's Representative of the dispute in writing. The LEA Authorized Representative shall respond to the CONTRACTOR in writing within fifteen (15) business days.

After sixty (60) business days: Disagreements between the LEA and CONTRACTOR concerning the Master Contract may be appealed to the County Superintendent of Schools or the State Superintendent of Public Instruction pursuant to the provisions of California Education Code Section 56366(c) (2).

60. PAYMENT FROM OUTSIDE AGENCIES

CONTRACTOR shall notify LEA when Medi-Cal or any other agency is billed for the costs associated with the provision of special education and/or related services to LEA students. Upon request, CONTRACTOR shall provide to LEA any and all documentation regarding reports, billing, and/or payment by Medi-Cal or any other agency for the costs associated with the provision of special education and/or related services to LEA students.

61. PAYMENT FOR ABSENCES

NONPUBLIC SCHOOL STAFF ABSENCE

Whenever a classroom teacher employed by CONTRACTOR is absent, CONTRACTOR shall provide an appropriately credentialed substitute teacher in the absent teacher's classroom in accordance with California Education Code section 56061. CONTRACTOR shall provide to LEA documentation of substitute coverage as per LEA requirement upon request. Substitute teachers shall remain with their assigned class during all instructional time. LEA will not pay for instruction and/or services unless said instruction or service is provided by an appropriately credentialed substitute teacher.

Whenever a related service provider is absent, CONTRACTOR shall provide "Makeup" services by a qualified service provider within thirty (30) calendar days from the date on which the services should have been provided unless otherwise agreed in LEA student's IEP.

NONPUBLIC SCHOOL STUDENT ABSENCE

If CONTRACTOR is a nonpublic school, no later than the tenth (10) cumulative day of a LEA student's unexcused absence and as specified in California Education Code section 48203, CONTRACTOR shall notify the LEA of such absence.

Criteria for a billable day for payment purposes is one day of attendance as defined in California Education Code sections 46010, 46010.3 and 46307. On an individual basis LEA may agree to partial payment to NPS CONTRACTOR when LEA has prior knowledge that student has

excessive absences, as identified by the LEA, while CONTRACTOR continues to make a program available; this agreement would be noted on the ISA. *Per Diem* rates for LEA students whose IEPs authorize less than a full instructional day may be adjusted on a pro rata basis in accordance with the actual proportion of the school day the student was served, if agreed to by the IEP team and indicated on the IEP and ISA. LEA shall not be responsible for payment of DIS or related services for days on which a student's attendance does not qualify for ADA reimbursement under state law, nor shall student be eligible for make-up services.

As part of its annual parental notifications, CONTRACTOR shall provide procedures for parental notification of absences. The CONTRACTOR will follow up with parents who do not comply with timely absence notifications.

When a student who receives Additional Adult Assistance as a related service at a NPS or BII services from a NPA is absent, the CONTRACTOR will be paid 2 hours of the contracted rates, if the staff is unable to be assigned to another student/classroom for which the CONTRACTOR will bill instead. If the NPS/A is informed 24 hours in advance, there will be no charge.

When the NPS provides transportation to and from school as identified in the ISA, and the parent or guardian does not notify the NPS of a student's absence, resulting in morning transportation being provided by the NPS, the LEA shall reimburse the NPS for this morning transportation.

NONPUBLIC AGENCY STAFF ABSENCE

When CONTRACTOR is a nonpublic agency and CONTRACTOR's service provider is absent, CONTRACTOR shall provide a qualified (as defined in section seven (7) of this agreement and as determined by LEA) substitute, unless LEA provides appropriate coverage in lieu of CONTRACTOR's service providers in accordance with section 48 of this agreement. LEA shall not pay for services unless a qualified substitute is provided and/or CONTRACTOR provides documentation evidencing the provision of "make-up" services by a qualified service provider within thirty (30) calendar days from the date on which the services should have been provided. In the event of Provider absence for Behavior Intervention Implementation Therapy services provided at the school site, services shall not be deemed eligible for make-up. CONTRACTOR shall not "bank" or "carry over" make up service hours under any circumstances, unless otherwise agreed to in writing by CONTRACTOR and LEA. In the event services were not provided, reasons for why the services were not provided shall be included.

NONPUBLIC AGENCY STUDENT ABSENCE

If CONTRACTOR is a nonpublic agency, it shall notify LEA of the absence or refusal of service of an LEA student no later than the fifth consecutive service day of the student's absence or refusal of services. Unless otherwise stipulated in the LEA student's IEP, or authorized by a LEA representative, LEA shall not be responsible for the payment of services when a student is absent or refuses services and student is not eligible for makeup services. In the event services were not provided, reasons for why the services were not provided shall be included.

When a student who receives Additional Adult Assistance as a related service at a NPS or BII services from a NPA is absent, the CONTRACTOR will be paid 2 hours of the contracted rates, if the staff is unable to be assigned to another student/classroom for which the CONTRACTOR will bill instead. If the NPS/A is informed 24 hours in advance, there will be no charge.

62. **LEA AND/OR NONPUBLIC SCHOOL CLOSURE DUE TO EMERGENCY**

THE FIRST THREE (3) DAYS OF EMERGENCY SCHOOL CLOSURES:

For the first three days of any emergency school closure due to a natural disaster or unavoidable crisis event(s) as described under Education Code Section 41422:

If the LEA receives reimbursement for education services from the state for an emergency school closure due to a natural disaster or unavoidable crisis event (s), the LEA will pay CONTRACTOR-for their regularly scheduled services, regardless of whether services are rendered during the first three days as set forth in Section 7 below.

When the emergency school closure is lifted, CONTRACTOR shall notify the LEA it serves of any lost instructional minutes. CONTRACTOR and LEA shall work collaboratively to determine the need for make-up days or service changes and shall work together to amend IEP and ISA as appropriate.

SCHOOL CLOSURES EXCEEDING 3 (THREE) CONSECUTIVE SCHOOL DAYS

For any emergency school closure due to a natural disaster or unavoidable crisis event(s) where the school closure lasts more than the (3) school days, the following provisions will apply from the first day of the closure, with any closure days from a prior contract year carrying over in the count.

1. **Extended School Closure.** Extended school closure is defined as those exceeding three (3) consecutive school days or any combination of alternative days/weeks should a hybrid program involving a combination of physical school attendance and Distance Learning Programs be implemented.

2. **Distance Learning Programs**. In accordance with the California Department of Education ("CDE") guidance and SELPA and/or LEA consultation, CONTRACTOR shall provide a Distance Learning Program during an extended school closure. Such programs shall be defined as the provision of educational services through internet, telephone, wireless, paper packets, and/or other technologies to facilitate the provision of and access to educational services without direct physical contact or physical proximity. For related services and instruction provided through virtual platforms, the CONTRACTOR will be committed to protecting the privacy each student's learning, in compliance with the Family Educational Rights and Privacy Act ("FERPA") and Health Insurance Portability and Accountability Act ("HIPAA").

3. **CDE Guidance.** Nothing herein shall impede the CDE from issuing its own guidance, requirements, conditions or reporting requirements. If the CDE issues its own directives concerning Distance Learning Programs, the parties will adhere to those requirements to the extent applicable, and this Contract provision shall be deemed amended to conform to such directives, unless a party challenges the directive or applicability of the directive with the CDE, or other administrative or legal agency having jurisdiction.

4. **Attendance While Distance Learning Programs are in Effect.** A day of positive student attendance shall be defined during the extended emergency school closure as each day the student participates in the CONTRACTOR's Distance Learning Program, for either the partial or full program for that day, as documented.

   A student is determined to be "absent" for both Basic Education and Related Services on days when there has been no participation by the student with CONTRACTOR's Distance Learning Program and/or support service(s).

   Accessible attendance records will be kept in accordance with procedures agreed upon in Section 9 of the Master Contract, as well as detailed services logs reflecting dates, times (including duration), manner, and description of services will be provided upon request.

5. **Utilization of Behavioral Support Staff in Distance Learning.** Behavior Implementation Intervention (BII) providers, Behavior Implementation Development ("BID") providers, and Intensive Individualized Services/Special Circumstance Educational Support (SCES) providers may be utilized in alternative ways to support assigned student access to Distance Learning programming. The above-named behavioral support providers who are normally utilized for direct student interaction and supervision may be utilized to assist students and their family members/adult caregivers and/or teachers in facilitating student access to Distance Learning via video, telephone or other virtual methods, as well as via paper packets. During the extended emergency school closure period, such services may be billed, as detailed below, in lieu of traditionally delivered Designated Instructional (Related) Services.

6. **Transportation Services for Distance Learning.** For those who have transportation listed on their ISA, in lieu of daily transportation, transportation staff and equipment may be utilized, up to one time per week, for student delivery of materials, equipment or any other transportation needed to facilitate Distance Learning Programs. Documentation of services will be separately maintained by Nonpublic School CONTRACTOR and submitted with the monthly invoice. If a student is transported during the week (e.g., as part of a hybrid model in which students are attending in person for part of the week), this service will not be offered because materials can be provided directly to the student and brought home by the student.

7. **Payment for Services during Distance Learning.** The billing and payment provisions of the Master Contract and applicable ISAs are modified as follows while Distance Learning Programs are in effect. For students not attending extended school year (ESY), payment for student absence as defined in this section does not begin until the first day of Regular School Year (RSY).

   A. **For Basic Education Services,** the LEA will reimburse NPS CONTRACTOR: (a) for the first three (3) instructional days of student absence, at one-hundred percent (100%) of those Basic Education services in accordance with the active ISA and rate schedule, as described in paragraph 3, above; and (b) after the first three (3) instructional days of extended school closure or if services are rendered in the first three days of extended school closure, one hundred percent (100%) of the Basic Education services to students as per the ISA and CONTRACTOR's rate

schedule who are present, as defined above, under the Distance Learning Program and District guidance.

B. For Designated Instructional (Related) Services, NPAs who provide Behavioral Services, & NPSs who provide Intensive Individualized Services/Special Circumstance Educational Support ("SCES") Behavioral Services , the LEA will reimburse CONTRACTOR: (a) for the first three (3) instructional days of student absence, at one-hundred percent (100%) of any related services that are previously scheduled, in accordance with the active ISA and rate schedule, and (b) after the first three (3) instructional days of extended school closure or if services are rendered in the first three days of extended school closure, one hundred percent (100%) of the services to students as per the ISA and CONTRACTOR's rate schedule that are directly delivered. Payable Related Services are those services specified in the LEA's Master Contract rate schedule. Detailed services logs reflecting dates, times (including duration), manner, and description of services will be provided.

63. **INSPECTION AND AUDIT**

The CONTRACTOR shall maintain, and the LEA shall have the right to examine and audit, all of the books, records, documents, programs and practices and other evidence that reflect all fees claimed or earned under this Agreement.

CONTRACTOR shall provide access to LEA to all records including, but not limited to: pupil records as defined by California Education Code section 49061(b) including electronically stored information; cost data and fiscal records as set forth in Title 5 of the California Code of Regulations section 3061; registers and roll books of teachers and/or daily service providers; daily service logs and notes used to record the provision of related services including supervision; daily service logs and notes or other documents used to record the provision of services provided through adult assistance (herein after referred to as "aide"), behavior intervention aides, and bus aides; absence verification records; bus rosters; staff lists specifying credentials held and documents evidencing other staff qualifications, social security numbers, dates of hire, and dates of termination; records of employee training and certification; staff time sheets; non-paid staff and volunteer sign-in sheets; transportation and other related services subcontracts; school calendars; bell/class schedules when applicable; liability and worker's compensation insurance policies; state nonpublic school and/or agency certifications; by-laws; lists of current board of directors/trustees, if incorporated; and other documents evidencing financial expenditures; federal/state payroll quarterly reports (Form 941/DE3DP); and bank statements and canceled checks or facsimile thereof. Such access shall include unannounced inspections by LEA. CONTRACTOR shall make available to LEA all budgetary information including operating budgets submitted by CONTRACTOR to LEA for the relevant contract period being audited.

CONTRACTOR shall make all records available at the office of LEA or CONTRACTOR's offices (to be specified by LEA) at reasonable times and without charge. All records shall be provided to LEA within five (5) business days of a written request from LEA. CONTRACTOR shall, at no cost to LEA, provide assistance for such examination or audit. LEA's rights under this section shall also include access to CONTRACTOR's offices for purposes of interviewing CONTRACTOR's employees. If any document or evidence is stored in an electronic form, it

shall be provided in a format that is accessible and readable by current software utilized by the LEA.

CONTRACTOR shall obtain from its subcontractors and suppliers written agreements to the requirements of this section and shall provide a copy of such agreements to LEA upon request by LEA.

If an inspection, review, or audit by LEA, a state agency, a federal agency, and/or an independent agency/firm determines that CONTRACTOR owes LEA monies as a result of CONTRACTOR's overbilling or failure to perform, in whole or in part, any of its obligations under this Master Contract, LEA shall provide to CONTRACTOR written notice demanding payment from CONTRACTOR and specifying the basis or bases for such demand. Unless CONTRACTOR and LEA otherwise agree in writing, CONTRACTOR shall pay to LEA the full amount owed as result of CONTRACTOR's overbilling and/or failure to perform, in whole or in part, any of its obligations under this Master Contract, as determined by an inspection, review, or audit by LEA, a state agency, a federal agency, and/or an independent agency/firm. CONTRACTOR shall make such payment to LEA within thirty (30) days of receipt of LEA's written notice demanding payment.

64. **RATE SCHEDULE**

The attached rate schedule (Exhibit A) limits the number of contracted LEA students that may be enrolled and the maximum dollar amount of the contract. It may also limit the maximum number of contracted LEA students that can be provided specific services. Special education and/or related services offered by CONTRACTOR, shall be provided by qualified personnel as per State and Federal law, and the codes and charges for such educational and/or related services during the term of this contract, shall be as stated in Exhibit A, attached hereto. Absent students may not be rescheduled or rebilled. Absences and makeup sessions shall be documented and follow delineated allowable and non-allowable "makeup" parameters.

When CONTRACTOR is a nonpublic school, an appropriately qualified person shall serve as curricular and instructional leader, and be able to provide leadership, oversight and professional development. Payment for Basic Education (BE) is based on positive attendance only (RSY: up to 180 days maximum/ESY up to 20 days maximum). Daily basic education rates for LEA students whose IEPs authorize less than a full instructional day may be adjusted proportionally. Any proration of the daily basic education rate will be mutually agreed upon and indicated in the ISA. When CONTRACTOR provides an integrated program, all related supports and services are included in the basic education rate. Lack of qualified DIS personnel may result in proration of basic education rate for integrated programs equal to rate as paid to other NPS for same DIS services for those students affected. CONTRACTOR shall bill all transportation services from the flat per diem rate. CONTRACTOR shall pay parent for transportation reimbursement at the LEA determined rate for one round trip from home to school from the per diem transportation rate.

When CONTRACTOR is an NPS associated with an RTC (NPS/RTC), CONTRACTOR shall be eligible for Room and Board payments on dates that the student was actually in attendance and received Room and Board services, payable for up to a maximum of 365 billable days or 366 days during a leap year, which may include a maximum of ten (10) days per Contract year when the student's bed is unoccupied due to home visits of a therapeutic nature, unless otherwise mutually agreed upon by CONTRACTOR and LEA. Any payment for additional

days in special circumstances, such as a student's hospitalization or extended home visits exceeding ten (10) days in a Contract year, requires prior written approval from both the LEA and the CONTRACTOR.

65. **DEBARMENT CERTIFICATION**

By signing this agreement, the Contractor certifies that:

(a) The Contractor and any of its shareholders, partners, or executive officers are not presently debarred, suspended, proposed for debarment, or declared ineligible for the award of contracts by any Federal agency, and

(b) Have not, within a three-year period preceding this contract, been convicted of or had a civil judgment rendered against them for: commission of fraud or a criminal offense in connection with obtaining, attempting to obtain, or performing a Federal, state or local government contract or subcontract; violation of Federal or state antitrust statutes relating to the submission of offers; or commission of embezzlement, theft, forgery, bribery, falsification or destruction of records, making false statements, tax evasion, or receiving stolen property; and are not presently indicted for, or otherwise criminally or civilly charged by a Government entity with, commission of any of these offenses.

The parties hereto have executed this Master Contract by and through their duly authorized agents or representatives. This Master Contract is effective on the 1st day of July, 2026, and terminates at 5:00 P.M. on June 30, 2027, unless sooner terminated as provided herein.

CONTRACTOR,	LEA, Burbank Unified School District
Nonpublic School/Agency	
By: _____ Signature Date	By: _____ Signature Date
Name and Title of Authorized Representative	Name and Title of Authorized Representative

Notices to CONTRACTOR shall be addressed to:	**Notices to LEA shall be addressed to:**
	Jennifer Nicholson, Director of Special Education
Name	Name and Title Burbank Unified School District
Nonpublic School/Agency/Related Service Provider	LEA 1900 W. Olive Ave, 3rd Floor
Address	Address Burbank CA 91506
City State Zip	City State Zip 818-729-4449 818-729-4544
Phone Fax	Phone Fax jennifernicholson@burbankusd.org
Email	Email

Additional LEA Notification
(Required if completed)
Sandra Shearer, Administrative Secretary II

Name and Title 1900 W. Olive Ave., 3rd Floor
Address Burbank CA 91506
City State Zip 818-729-4524 818-729-4544
Phone Fax sandrashearer@burbankusd.org
Email

EXHIBIT A: 2026-2027 RATES

4.1 RATE SCHEDULE FOR CONTRACT YEAR

The CONTRACTOR: _____
The CONTRACTOR CDS NUMBER, NPS only:
_____

PER ED CODE 56366 – TEACHER-TO-PUPIL RATIO, NPS only:_____

Education service(s) offered by the CONTRACTOR and the charges for such service(s) during the term of this contract, as negotiated by GLAAS (day schools only) on behalf of the LEAs, shall be as follows:

1) Daily Basic Education Rate:

2) Inclusive Education Program
(Includes Educational Counseling (not ed related mental health) services, Speech & Language services, Behavior Intervention Planning, and Occupational Therapy as specified on the student's IEP.) DAILY RATE:

3) Related Services

SERVICE	RATE	PERIOD
Intensive Individual Services (340)		
Language and Speech (415)		
Adapted Physical Education (425)		
Health and Nursing: Specialized Physical Health Care (435)		
Health and Nursing: Other Services (436)		
Assistive Technology Services (445)		
Occupational Therapy (450)		
Physical Therapy (460)		
Individual Counseling (510)		
Counseling and Guidance (515)		
Parent Counseling (520)		
Social Work Services (525)		
Psychological Services (530)		
Behavior Intervention Services (535)		
Specialized Services for Low Incidence Disabilities (610)		
Specialized Deaf and Hard of Hearing (710)		

Interpreter Services (715)		
Audiological Services (720)		
Specialized Vision Services (725)		
Orientation and Mobility (730)		
Specialized Orthopedic Services (740)		
Reader Services (745)		
Transcription Services (755)		
Recreation Services, Including Therapeutic (760)		
College Awareness (820)		
Work Experience Education (850)		
Job Coaching (855)		
Mentoring (860)		
Travel Training (870)		
Other Transition Services (890)		
Other (900)		
Other		

INDIVIDUAL SERVICES AGREEMENT FOR NONPUBLIC SCHOOL OR AGENCY SERVICES

(Education Code Sections 56365 et seq.)

This agreement is effective on _____or the date student begins attending a nonpublic school or receiving services from a nonpublic agency, if after the date identified, and terminates at 5:00 P.M. on June 30, 20__, unless sooner terminated as provided in the Master Contract and by applicable law.

Local Education Agency _____ Nonpublic School or Agency_____

LEA Case Manager: Name _____ Phone Number _____

Pupil Name _____ Sex: ☐ M ☐ F Grade:_____
(Last) (First) (M.I.)

Address _____ City _____ State/Zip _____

DOB _____ Residential Setting: ☐ Home ☐ Foster ☐ LCI # _____ ☐ OTHER _____

Parent/Guardian Name_____ Phone ( ) _____ ( ) _____
(Residence) (Business)

Address _____ City _____ State/Zip _____
(If different from student)

AGREEMENT TERMS:

1. *Nonpublic School*: The average number of minutes in the instructional day will be: _____ during the regular school year
   _____ during the extended school year
2. *Nonpublic School*: The number of school days in the calendar of the school year are: _____ during the regular school year
   _____ during the extended school year
3. *Educational services as specified in the IEP shall be provided by the CONTRACTOR and paid at the rates specified below.*

   A. *INCLUSIVE AND/OR BASIC EDUCATION PROGRAM (Applies to nonpublic schools only)* **Daily Rate:**_____

   Estimated Number of Days _____ **x Daily Rate** _____ **= PROJECTED BASIC EDUCATION COSTS** _____

   B. RELATED SERVICES:

SERVICE	Provider			# of Times per wk/mo/yr., Duration; or per IEP; or as needed	Cost per session	Maximum Number of Sessions	Estimated Maximum Total Cost for Contracted Period
	LEA	NPS	OTHER Specify				
Intensive Individual Services (340)							
Language/Speech Therapy (415) a. Individual b. Group							
Adapted Physical Ed. (425)							
Health and Nursing: Specialized Physical Health Care (435)							
Health and Nursing Services: Other (436)							
Assistive Technology Services (445)							
Occupational Therapy (450)							
Physical Therapy (460)							
Individual Counseling (510)							
Counseling and guidance (515).							
Parent Counseling (520)							

SERVICE	Provider			# of Times per wk/mo/yr., Duration; or per IEP; or as needed	Cost per session	Maximum Number of Sessions	Estimated Maximum Total Cost for Contracted Period
	LEA	NPS	OTHER Specify				
Social Work Services (525)							
Psychological Services (530)							
Behavior Intervention Services (535)							
Specialized Services for Low Incidence Disabilities (610)							
Specialized Deaf and Hard of Hearing Services (710)							
Interpreter Services (715)							
Audiological Services (720)							
Specialized Vision Services (725)							
Orientation and Mobility (730)							
Braille Transcription (735)							
Specialized Orthopedic Service (740)							
Reader Services (745)							
Note Taking Services (750)							
Transcription Services (755)							
Recreation Services (760)							
College Awareness Preparation (820)							
Vocational Assessment, Counseling, Guidance and Career Assessment (830)							
Career Awareness (840)							
Work Experience Education (850)							
Mentoring (860)							
Agency Linkages (865)							
Travel Training (870)							
Other Transition Services (890)							
Other (900)							
Other							
Transportation-Emergency b. Transportation-Parent							
Bus Passes							
Professional Development							

ESTIMATED MAXIMUM RELATED SERVICES COST $ _____

TOTAL ESTIMATED MAXIMUM BASIC EDUCATION AND RELATED SERVICES COSTS$ _____

4. Other Provisions/Attachments:

_____

_____

5. MASTER CONTRACT APPROVED BY THE GOVERNING BOARD ON _____

6.Progress Reporting Requirements: _____ Quarterly ___ Monthly ___ Other (Specify) _____

The parties hereto have executed this Individual Services Agreement by and through their duly authorized agents or representatives as set forth below.

-CONTRACTOR-	-DISTRICT-
_____	_____
(Name of Nonpublic School/Agency)	(Name of School District)
_____	_____
(Signature) (Date)	(Signature) (Date)
_____	_____
(Name and Title)	(Name of Superintendent or Authorized Designee)

Name	MC #
360 Degree Customer Inc.	PS221
Academy for the Advancement of Children with Autism	PS002
Accountable Healthcare Staffing (AHC)	PS299
Aequor Healthcare Services	PS286
Amergis Healthcare Staffing Inc. - Los Angeles	PS230
Ascend Rehab Services	PS287
Atlas Behavior Services	PS279
Autism Behavior Intervention, Inc.	PS211
Autism Spectrum Therapies	PS003
Aya Healthcare, Inc.	PS293
Behavior and Education, Inc.	PS229
Behavioral Education for Children with Autism, LLC	PS209
Behavioral Emotional & Academic Mentoring (BEAM), LLC	PS298
Birch Agency	PS301
California Pyschcare, Inc.	PS256
CALO	PS274
Carestaff	PS300
Casa Pacifica	PS273
Center for Developing Kids	PS060
Center for Vision Development Optometry, Inc.	PS201
Club Xcite	PS302
Communications Solutions	PS253
Comprehensive Therapy Associates	PS284
Copper Hills Youth Center	PS208
Covelo Group	PS285
Devereux Advanced Behavioral Health Georgia	PS250
Devereux Cleo Wallace	PS219
Devereux Texas Treatment Network	PS259
Discovery Ranch	PS272
EdTheory	PS242
Elliott Institute	PS210
Genesis Group	PS260
Glendale Adventist Medical Center/Pediatric Therapy Center	PS053
Hathaway-Sycamores	PS030
Haynes Family of Programs - S.T.A.R. Academy	PS226
Hear Now dba Abramson Audiology	PS297
Heartspring School	PS227
HELP Group	PS013
Hillside School and Learning Center	PS029
Hillsides Education Center	PS088
Holding Hands Pediatric Therapy & Diagnostics	PS120
ICAN-B	PS267
Inclusive Education & Community Partnership	PS257
Inclusive Learning Partners	PS303

Institute for the Redesign of Learning DBA Almansor Center/Westmoreland Academy	PS021
In Touch Behavioral Group	PS261
LA Speech Pathology Services, Inc.	PS266
Lakemary School	PS255
Logan River Academy, LLC	PS228
Marianne Frostig Center of Educational Therapy (Frostig School)	PS202
New Directions Solutions, LLC (ProCare)	PS264
New Mediscan II, LLC dba Cross Country Education	PS222
Northpoint School - Child & Family Guidance Center	PS203
Nurturing Nests Therapy Center	PS270
Pine Health Staffing	PS305
Pioneer Healthcare Services	PS200
Point Quest Pediatric Therapies, LLC	PS224
Professional Tutors of America, Inc.	PS216
Provo Canyon School, Inc.	PS241
Quest Therapy Group	PS269
RCM Health Care Services	PS295
Real Connections Child Development Institute	PS245
Soliant Health	PS220
Solstice RTC / Fernwood Academy	PS262
Speechcom, Inc.	PS243
STAR of CA	PS275
Telos Academy Center Compus	PS281
The Speech Pathology Group, Inc. dba Child Counseling & Behavior Therapy Clinic	PS199
The Speech Pathology Group, Inc. dba SPG Therapy & Education-Walnut Creek	PS254
Therapy in Action	PS234
Therapy Staff, LLC	PS249
Tiny Hands Therapy	PS289
Total Education Solutions	PS236
Uinta Academy	PS304
Valley High School & Learning Center DBA Dubnoff School	PS004
Villa Esperanza Services	PS007
VocoVision LLC aka Blazerworks	PS292
WayPoint Academy, dba Cascade Lodge for Boys	PS294
Zen Educate	PS296

NPS Rates AACA Fee Schedule**
(2026 – 2027 School Year)

Per Hour	Per Day	
	$185.79	Special Education Instruction
	$362.94	1-on-1 Instructional Aide
	$625.80	(BII) Behavior Intervention Implementation, and (ABA-D) Applied Behavior Analysis Direct
$176.62		(S&L) Speech & Language Development and Remediation
$169.53		(OT) Occupational Therapy Services – Ind/Grp
$125.94		(APE) Adaptive Physical Education - Ind/Grp
$161.18		(PS) Psychological Services, including Counseling - Ind/Grp
$161.18		(BID) Behavior Intervention Development and Modification, and (ABA-S) Applied Behavior Analysis Supervision
$269.23		Assisted Technology (AAT/AAC) Direct Service or Consult
$158.09		Health and Nursing Services

Transportation Aide Services *
(2026 - 2027 School Year)

Per Hour	Flat Rate	
$69.03		1-on-1 Transportation Aide
$104.30		(BII) Behavior Intervention Implementation Transportation Aide
	$331.97	Transportation Aide

*A 2-hour minimum will be billed for any hourly transportation aide services.

NPS Rates for Assessments
(2026 - 2023 School Year)

Total	
$1,230.00	Assisted Technology (AAT/AAC) Evaluation
$3,250.00	Psycho-Educational Assessment
$1,400.00	APE, OT, SLP, PT Assessment
$2,100.00	FBA (Functional Behavioral Assessment)

** If Contractor is not duly notified at least twenty-four (24) hours in advance of any student absence, the LEA or Contracting District hereby acknowledges and undertakes the obligation to compensate the Contractor for all costs associated with contracted Special Education Instruction (Basic Education) and Aide services (full-day), including but not limited to one-on-one (1:1), Behavior Intervention Implementation (BII) services, and Health and Nursing Services.

This Document (including attachments) contains proprietary and confidential information, which may also be subjects to non-disclosure agreement terms. Accordingly, any disclosure of this document or the information is prohibited.

Aequor Education | Burbank Unified School District

School Year: 2026-2027

Position	Bill Rate
Speech Language Pathologist (SLP)	$120.00/hour
Speech Language Pathologist Assistant (SLPA)	$85.00/hour
Occupational Therapist (OT)	$110.00/hour
Certified Occupational Therapy Assistant (COTA)	$85.00/hour
Physical Therapist (PT)	$110.00/hour
Physical Therapy Assistant (PTA)	$85.00/hour
Special Education Teacher	$100.00/hour
General Education Teacher	$75.00/hour
School Psychologist	$120.00/hour
Board Certified Behavior Analyst (BCBA)	$120.00/hour
Behavior Technician	$50.00/hour
Registered Behavior Technician (RBT)	$55.00/hour
Paraprofessional	$45.00/hour
Registered Nurse (RN)	$80.00/hour
Licensed Vocational Nurse (LVN)	$65.00/hour
Certified Nursing Assistant (CNA)	$55.00/hour
Social Worker/ Counselor	$90.00/hour
Deaf & Hard of Hearing Teacher (DHH)	$110.00/hour
Teacher of the Visually Impaired (TVI)	$110.00/hour
ASL Interpreter	$85.00/hour

IRL/Almansor/Westmoreland
Burbank Unified School District
Tuition Service Rates
2026-2027

Education service(s) offered by CONTRACTOR, and the charges for such service(s) during the term of this contract, shall be as follows:

A. **Basic Education Program**	**Rate**	**Period**
Basic Education Rate - Almansor	$ 201.06	Per Diem
Basic Education Rate - Westmoreland	$ 204.82	Per Diem

Per diem rates for pupils whose Individual Education Programs authorize less than a full instructional day shall be adjusted proportionally. In such cases only, the adjustments in basic rate shall be based on the percentage of a 365-minute instructional day.

B. **Related Services**

(1)	a. Transportation - Round Trip	$ 128.15	Per Diem
	b. Transportation - One Way	(1/2 of Round Trip Rate)	
	c. Transportation - MTA	Current rate	per month
	d. Transportation - Parent*		
(2)	a. Ed. Counseling - Individual	$ 111.44	Per Hour
	b. Ed. Counseling - Group	$ 80.33	Per Student Hour
	c. Ed. Counseling - Parent	$ 111.44	Per Hour
(3)	a. Adapted Physical Education - Individual	$ 118.87	Per Hour
	b. Adapted Physical Education - Group	$ 79.87	Per Student Hour
(4)	a. Language/Speech Therapy - Individual	$ 118.87	Per Hour
	b. Language/Speech Therapy - Group	$ 79.87	Per Student Hour
(5)	Paraprofessional 1:1 (must be authorized on IEP)	$ 38.14	Per Hour
(6)	Intensive Special Ed Instruction	$ 133.73	Per Hour
(7)	Occupational Therapy	$ 133.73	Per Hour
(8)	Physical Therapy	$ 133.73	Per Hour
(9)	Behavior Intervention Implementation (BII)	$ 76.49	Per Hour
(10)	Behavior Intervention Including Development (BID)	$ 105.87	Per Hour
(11)	Health and Nursing Services	$ 133.73	Per Hour
(12)	Parent Training	$ 325.02	Per Hour
(13)	ST, OT, PT & PSYCH Assessment	$ 650.06	Each
(14)	Independent Studies	$ 124.44	Per Diem
(15)	Psychological Services other than IEP & Assessment	$ 219.17	Per Hour
(16)	Social Work	$ 80.32	Per Hour

* Parent transportation reimbursement rates to be set forth in Individual Service Agreement.

ATTACHMENT A

AMERGIS HEALTHCARE STAFFING SERVICES, INC.

STAFFING RATES FOR

AMERGIS EDUCATIONAL SERVICES

Charges will be based on the following hourly rate schedule ***effective July 1st 2026 - June 30th 2027*** :

Service	Rate per Hour
ACSW/AMFT	$75
APE Teacher	$90
ASL Interpreter	$70
Audiologist	$100
BCBA	$120
Behavioral Aide/Technician	$52
C.N.A./Health Aide/MA	$45
Clerical/administrative assistant	$42
Credentialed RN (CRN)	$120
Prelim Credentialed RN (CRN)	$95
Custodial/Janitorial	$38
Food Service Specialist	$38
General Education Teacher	$75
Instructional Aide/School Aide	$42
LCSW/LMFT	$90
LVN	$63
Orientation Mobility Specialist / Visual Education Specialist / Deaf and Hard-of-Hearing (DHH) Teacher	$120
OT/PT	$105 - 120
Principal/HR Director	$120 - 130
RN (non-credentialed)	$85
School Counselor	$75
School Psychologist	$105 - 120
SLP	$102 - 135
SLPA/COTA	$80
SPED Teacher – Mild/Mod and Resource Specialist	$85 - 95
SPED Teacher – Mod/Severe and Early Childhood	$110
Substitute SPED Teacher (Temporary certification)	$75

BURBANK SCHOOL DISTRICT :

Signature

Printed Name & Title

Date

AMERGIS HEALTHCARE STAFFING SERVICES, INC.

Signature

Printed Name & Title

Date

NPA03 – Services and Fees

Please provide information on all services for which you are seeking certification

NPA Name: Atlas Behavior Services

Title 5, California *Code of Regulations* (5 *CCR*) § 3051

Related Services	Service Abbreviation	Fees	Time Allotment (per hour, day, or month?)
Adapted Physical Education (5 *CCR* § 3051.5)	APE		
Assistive Technology Services (5 *CCR* § 3051.19)	ATS		
Audiological Services (5 *CCR* § 3051.2)	AS		
Behavior Intervention - Design or Planning (5 *CCR* § 3051.23)	BID	$54	Per hour
Behavior Intervention – Implementation (5 *CCR* 3051.23)	BII	$54	Per hour
Counseling and Guidance Services (5 *CCR* § 3051.9)	CG		
Early Education Programs for Children with Disabilities (5 *CCR* § 3051.20)	EE		
Health and Nursing Services (5 *CCR* § 3051.12)	HNS		
Language and Speech Development and Remediation (5 *CCR* § 3051.1)	LSDR		
Music Therapy (5 *CCR* § 3051.21)	MT		
Occupational Therapy Services (5 *CCR* § 3051.6)	OT		
Orientation and Mobility Instruction (5 *CCR* § 3051.3)	OM		
Parent Counseling and Training (5 *CCR* § 3051.11)	PCT		
Physical Therapy Services (5 *CCR* § 3051.6)	PT		
Psychological Services Other Than Assessment and IEP Development (5 *CCR* § 3051.10)	PS		
Recreation Services (5 *CCR* § 3051.15)	RS		



Service Fee List
July 1, 2026-June 30, 2027

Assessment and Report **$103hour**

Supervision (BID) **$103 hour**

- A minimum of 4 per month of BID hours per 15 hours per week of BII, 20% of which will be indirect is recommended for each student.
- Design of treatments and data collection systems to teach appropriate behaviors specified in the student's IEP goals
- Participation in the development of the behavior support plan that is included in the IEP
- Participation in IEP meetings
- Training to BII, teacher and other applicable staff, as needed, in treatment plan implementation, including measurements of treatment fidelity.
- Monitor of data to make decisions and evaluate outcomes

Behavior Intervention (BII) **$66.64/hour**

- Implementation of student's treatment plan and daily data collection

BEHAVIOR AND EDUCATION INC

2780 Skypark Dr. Suite 410
Torrance, CA 90505
Phone 310-406-1500
Fax 310-406-1531

RATE SHEET

Non-Public Agency Behavior Intervention Services

BEHAVIORAL SERVICES	PROFESSIONAL FEES
Behavior Intervention Imp of Behavior Modification Plans (BII) • Direct Intervention (home/ community) • School based ABA (NPA 1:1 aide)	$67/ hour
Behavior Intervention Incl. Development and Modification (BID) • Supervision of BII services • Program design, development, and modification	$82/ hour
Behavior Assessment by BCBA • Functional Behavior Assessment (Descriptive or Analytic) • Behavior Support Planning • Developmental and/or Adaptive Skills Assessment • Independent Educational Evaluation (IEE)	$103/hour
Behavior Consultation, Aide Training, & Supervision of District Staff • Development and implementation of behavior support plans • Instructional aide training • Program Supervision of BII services delivered by district staff	$82/ hour

CONTACT INFORMATION

Barbara Endlich, Psy.D, BCBA-D
Phone: (310) 406-1500
Email: Bendlich@baetherapy.com

ClubXcite

RATE SCHEDULE 2026-2027 SCHOOL YEAR – CX STAFF VOLUME DISCOUNTED RATES

Behavioral Intervention Services (535)	Hourly Rate	Discounted Rate 20+ staff
Paraprofessional/ Instructional Aide	$40.00	$37.00
Behavior Technician w/CPI (BII)	$45.00	$42.00
Registered Behavior Technician (BII)	$52.00	$49.00
Clinical Supervisor w/MA/MS (BID, BII)	$75.00	$65.00
BCaBA Supervisor (BID, BII)	$80.00	$65.00
BCBA Supervisor (BID, BII, FBA)	$90.00	$65.00
BCBA Contractor	$100.00	$100.00

Education/Teachers	Hourly Rate
Special Ed Teacher (Mild-Mod)	$100.00
Special Ed Teacher (ESN)	$110.00
General Education Teacher	$85.00
Teacher of the VI/DHH	$125.00
American Sign Language Interpreter (SLI)	$80.00

Therapy Services	Hourly Rate
Occupational Therapist	$110.00
COTA	$79.00
SLP	$130.00
SLPA	$79.00
Physical Therapist	$120.00
PTA	$79.00

Counseling and Social Services	Hourly Rate
School Psychologist	$120.00-140.00
School Social Worker	$90.00
School Counselor	$90.00

Health Services	Hourly Rate
Credentialed School Nurse	$85.00
RN	$85.00
LVN	$62.00
CNA	$45.00

RELATED SERVICES	Hourly Rate
Adapted Physical Education (APE)	$ 157
Assistive Technology (AT)	$ 157
Augmentative Alternative Communication (AAC)	$ 157
Behavior Intervention Development (BID)	$ 139
Behavior Intervention Implementation (BII)	$ 58
Counseling & Guidance	$ 139
Deaf or Hard of Hearing (DHH) Services	$ 172
Health & Nursing Services **Certified Nursing Assistant (CNA)** **Licensed Vocational Nurse (LVN)** **School Nurse/Registered Nurse (RN)**	 $ 50 $ 60 $ 124
Language & Speech Services	$ 139
Occupational Therapy Services	$ 139
Psychological Services (ERICS Counseling)	$ 139
Recreational Therapy	$ 165

OTHER SERVICES	Hourly Rate
Case Manager	$ 131
Resource Specialist Teacher (RSP)/ Specialized Academic Instructor (SAI) **Special Education Aide (Sped Aide)**	$ 95 $ 58
Interpreter/Translation Services	$ 121
Program Administrator	$ 250
Professional Development	$ 250

In accordance with California labor law, both Comp Therapy and the Client must ensure that all employees receive the legally required number of breaks when services are performed at the Client's work site.

SERVICES

Program Support Package: Includes initial consultation meeting, implementation of services, and program setup. A fee of $500 per school site will be applied annually.

Minimum On-Site Service Charge: There is a three (3) hour on-site minimum for all service providers, except BII/Sped Aide services have a 6-hour on-site minimum.

Minimum Virtual Service Charge: There is a 1-hour minimum for all service providers.

Schedule Change without Notification: If Client does not provide Comp Therapy personnel with at least one business days' notice of a student absence or change in the school/student schedule, Client will be charged the amount equal to the scheduled service.

BII/Sped Aide On-Site Service: If a student is absent or their schedule is changed without prior notice to the BI/Sped Aide, the Client will be charged a six (6) hour service fee. Notification of any schedule changes must be provided to the BI/Sped Aide at least one (1) business day in advance and/or before the provider is en route or present at the school site. During the student's absence, the Client may retain the BI/Sped Aide on site to perform alternative duties within their scope of practice.

LVN/CNA On-Site Service: If a student is absent or their schedule is changed without prior notification to the LVN/CNA, the Client will be charged a six (6) hour service fee. Notification of any schedule changes must be provided before the LVN/CNA is en route or present at the school site. In the event of the student's absence, the Client may retain the LVN/CNA on site to perform other duties within their scope of practice.

Cancellation of On-Site/Virtual Meetings: If an IEP meeting is cancelled, Client must inform provider at least one day in advance. If Client fails to do so, they will be charged a 1-hour service fee.

Hours: Comp Therapy personnel are permitted to complete designated work offsite. Non-direct service hours may include, but are not limited to, IEP development, participation in IEP meetings, documentation, treatment planning, progress reports, and caseload service. Off-site work hours will be billed in 15-minute increments.

ASSESSMENT AREAS	Hourly Rate
Adapted Physical Education Assessment	$ 157
Academic Achievement (completed by Case Manager)	$ 131
Assistive Technology Assessment	$ 157
Augmentative Alternative Communication (AAC) (completed by AT or SLP)	$ 157
ERICS Assessment (completed by School Psych)	$ 139
Deaf or Hard of Hearing Assessment	$ 172
Functional Behavior Assessment (completed by BID Provider)	$ 139
Health Assessment **Vision, Hearing, and Scoliosis Screening**	$ 410 flat rate $ 11 per student
Occupational Therapy Assessment	$ 139
Physical Therapy Assessment	$ 165
Psycho-Educational Assessment (completed by School Psych)	$ 139
Recreational Therapy Assessment	$ 165
Social Emotional Assessment (completed by School Psych)	$ 139
Language & Speech Assessment (completed by SLP)	$ 139
Independent Education Evaluation - IEE	Contact for pricing

ASSESSMENTS

For Scheduled In-Person Assessments: To avoid a three (3) hour service fee per assessment, Client must notify the assessor or Comp Therapy at least one business day in advance if there will be a change in school/student schedule or if the student is absent. Once assessor is in-route and/or on site, and unable to assess student, Client will be charged a three (3) hour service fee. Billed student absence time will not count toward the maximum assessment billing hour allotment.

For Scheduled Virtual Assessments: To avoid a one and a half (1.5) hour service fee per virtual assessment, the Client must notify the assessor or Comp Therapy at least one business day in advance of any changes to the student's schedule or in the event of a student absence. If the assessor is notified on the day of the assessment of the student's unavailability, the Client will be charged a one and a half (1.5) hour service fee for each assessment. Billed student absence time will not count toward the maximum assessment billing hour allotment.

RUSH Rate: If Client requests an assessment to be completed within 30 calendar days or less of deadline. Client will be charged a RUSH RATE of $167 per hour. Health Assessment RUSH Rate will be charged $495 per assessment.

CPI NONVIOLENT CRISIS INTERVENTION (NCI) TRAINING

Comp Therapy offers CPI Nonviolent Crisis Intervention Training to faculty/staff. Nonviolent Crisis Intervention (NCI) Training prepares your staff to prevent and de-escalate medium to high-risk behavior using both restrictive and non-restrictive methods. NCI rates begin at $150.00 per faculty/staff member, with a minimum of 10 participants.

PROFESSIONAL ENRICHMENT WORKSHOP

Comp Therapy offers customizable Professional Enrichment Workshops for comprehensive faculty and staff training, structured to provide essential training to address the needs of students enrolled in special education programs. Each workshop is presented by a licensed or credentialed professional in the relevant field. Workshop fees range from $1,500 to $3,000 per workshop.

Below are Professional Enrichment topics that may benefit your school. These workshops can be customized to meet your school's specific needs:

PROFESSIONAL ENRICHMENT WORKSHOP TOPICS
Collaborative Teaching
Universal Design For Learning
Teaching & supporting Students with Extensive Support Needs
Best Practices for Writing & Implementing IEPs
Data-Driven Decision Making in Special Education
Fostering Collaboration between General & Special Education Staff
Inclusive Practices

covelo group

Covelo Group Staffing Rates

SERVICE	RATE (per hour)
Behavioral Health Staff	
BCBA	$110
Behavior Technician (w/ CPI)	$51
Behavior Technician floater (w/ CPI)	$54
Registered Behavior Technician	$55
BID/BCBA Supervision	$100
School Psychologist	$95
Teachers & Classroom Support Staff	
Instructional Aide (IA)	$42
Instructional Aide (IA) Floater	$45
Para Educator	$38
Para Educator Floater	$41
SPED Teacher – Resource Specialist (RSP)	$93
SPED Teacher – Mild/Mod	$95
SPED Teacher – Mod/Sev	$97
Therapists	
SLP	$105
SLPA	$85
Occupational Therapist	$90
COTA	$80
Physical Therapist	$90
PTA	$80
Health Services Staff	
CNA/Medical Assistant	$40
LVN	$60
LVN (floater)	$63
RN (credentialed)	$100
RN (non-credentialed)	$80
Trainings w/ Certifications	
AHA Basic Life Support (BLS)	$55 per attendee
AHA Heartsaver	$55 per attendee
Stop The Bleed	$30 per attendee

Continued on next page

Professional Crisis Management (PCM)	$65 per attendee (certification) $50 per attendee (recertification)
Trainings w/o Certifications	
First Aid & Emergency Response	$20 per attendee
CPR and AED (Hands Only)	$15 per attendee
Search & Rescue/Medical Triage	$15 per attendee
Assessments	
Functional Behavior Assessment (FBA)	$100/hr.
Student Skills Assessment (EFL, AFLS, ABLLS, etc.)	$100/hr.
Speech Assessment	$125/hr.
PT Assessment	$105/hr.
OT Assessment	$105/hr.
Hearing/Vision Screenings	$100/hr.

Rates: Charges will be based on the following hourly rate schedule effective as of the starting date of the term of this agreement. For the convenience of the parties, changes in rates may be made during the course of performance by mutual agreement of both parties in writing.

Overtime: Overtime rates are charged for all hours worked in excess of forty (40) per week or according to applicable state law. The overtime rate is one and one-half (1.5) times the regular billing rate for such hours and two (2) times the regular billing rate for double-time, unless the applicable state law requires a different rate.

Mileage: Mileage will be charged accordingly at the federal rate.

Reporting Time Pay: In accordance with federal and local laws, employees will be compensated if they report to work but are sent home before the completion of their shift.

Volume Discount: At the conclusion of each semester, the total number of long-term substitutes will be evaluated. If the assessed number meets the criteria outlined below, a credit will be applied to the total invoiced amount from the commencement of the academic semester until its conclusion.

Number of Long-Term Positions:	**Credit:**
>30	2%
>50	4%

Burbank USD Rates for 2026-27
Dubnoff School

Regular Special Ed rate: $201.30
Transportation: $95 roundtrip daily
Speech and Occupational Therapy: $145 per hour
Counseling (pupil and/or ERICS): $110 an hour
AAA/One on one, or van aide: $45 an hour, $35 an hour for groups (2-4)
Behavioral supervision by Ray Hairapatian: $100 per hour per week per student, only for those students where it is stipulated in the IEP.

EDTHEORY
JOBS - TRANSFORMED - FOREVER

6701 Koll Center
Parkway, Suite #250,
Pleasanton, CA 94566
Phone: (925) 500-8383

RATE SHEET – 2026-27

Job Title	Hourly Rate
Speech and Language Pathologist (Monolingual)	$110.00
Speech and Language Pathologist (Bilingual)	$112.00
Speech and Language Pathology Assistant (Monolingual)	$88.00
Speech and Language Pathology Assistant (Bilingual)	$90.00
School Psychologist (Monolingual)	$132.00
School Psychologist (Bilingual)	$134.00
Special Education Teacher	$110.00
Adapted Physical Education (APE)	$110.00
Occupational Therapist	$110.00
Physical Therapist	$110.00
Certified School Nurse (CSN)/RN	$110.00
Board Certified Behavior Analyst (BCBA)	$132.00

Classified Staffing	
Job Title	**Hourly Rate**
Instructional Assistant/Aide	$58.00
Licensed Vocational Nurse (LVN)	$82.00
Certified Nurse Assistant (CNA)	$65.00
Registered Behavioral Technician (RBT)	$70.00
Behavioral Technician (BT)	$60.00
Mental Health Technician	$70.00

GLAAS
Greater Los Angeles Area SELPAs

ABC USD, Antelope Valley, Compton, Downey/Montebello, East San Gabriel Valley, Foothill, Hacienda La Puente, Long Beach, Los Angeles County Office of Education, Los Angeles County Charter, Los Angeles USD, Mid Cities, Norwalk/La Mirada USD, Pasadena, Pomona, Rowland, Santa Clarita, Southwest, Tri- City, Ventura County, West San Gabriel Valley, Whittier Area Cooperative

March 11, 2026

HILLSIDE SCHOOL AND LEARNING CENTER
(HILLSIDES DEVELOPMENTAL- LA CANADA)
4331 OAK GROVE DR.
LA CANADA, CA 91011

RE: 2026-2027 NPS Basic Education Rates

Dear Non-Public School Leader: CYNDI HATCHER

As a reminder, per approval by our Superintendents, the Greater Los Angeles Area SELPA (GLAAS) administrators are the authorized representatives for our member LEAs for purposes of developing appropriate rates and contractual agreements for nonpublic schools. A letter was sent to you on February 20, suggesting your Basic Daily Education Rate for the 2026-2027 School Year. GLAAS received your response to the letter accepting the suggested rate, which closes out the process for the 2026-2027 rate considerations with the following rate:

2026-2027 Basic Education Rate: $121.83

While GLAAS continues to closely monitor the development of the budget at the state-level, including the projections from the Legislative Analyst's Office related to the Governor's January Proposal, we are optimistic that the Governor's Proposed budget will materialize. In the event of substantial reductions to the budget, GLAAS will reach out to discuss alternative options.

Thank you for your continued support in providing ongoing placement options for our students with disabilities.

We look forward to another successful year of collaboration and achievement.

Sincerely,

Stacy Berrest, Jay Schwartz, and Scott Turner
GLAAS NPS Rate Consideration Committee

Holding Hands Pediatric Therapy & Adult Services

2026-2027 NPA Rate Sheet

Exhibit A	Exhibit B
Description of Services	**Rate**

	Proposed 2026-7 Rate	% Increase	Census
Direct Behavior Intervention BII Services	$56.50	Flat	<20
	$55.09	-2.50%	>=20
Behavior Intervention Supervision Monthly BID Services			
Functional Behavior Assessment • Includes Assessment • Report Writing • Attending IEP Meeting to Review FBA	$1600 Flat Rate for 8 Hours		

Rate for Master Contract



7141 Woodley Avenue
Van Nuys, CA 91406
(818) 285-8252 (Office)
(818) 273-1831(Fax)

Services and Rate/Fee Schedule for Burbank USD

Prepared by: Dr. Jose Davila

Date: April 22, 2025

Behavior Intervention Implementation • Provide One to One Support	$53 per hour
Behavior Intervention Development (BID) Non-BCBA • Behavior Intervention Plan (BIP) • Programming • Supervision of BII • Report Writing • IEP Meetings • FBA Reports	$67 per hour
Behavior Intervention Development (BID) BCBA • Behavior Intervention Plan (BIP) • Programming • Supervision of BII • Report Writing • IEP Meetings • FBA Reports	$97 per hour

NPA03 – Services and Fees

Please provide information on all services for which you are seeking certification

NPA Name: In Touch Behavioral Services, LLC

Title 5, California *Code of Regulations* (5 *CCR*) § 3051

Related Services	Service Abbreviation	Fees	Time Allotment (per hour, day, or month?)
Adapted Physical Education (5 *CCR* § 3051.5)	APE		
Assistive Technology Services (5 *CCR* § 3051.19)	ATS		
Audiological Services (5 *CCR* § 3051.2)	AS		
Behavior Intervention - Design or Planning (5 *CCR* § 3051.23)	BID	$88	per hour
Behavior Intervention – Implementation (5 *CCR* 3051.23)	BII	$58	per hour
Counseling and Guidance Services (5 *CCR* § 3051.9)	CG		
Early Education Programs for Children with Disabilities (5 *CCR* § 3051.20)	EE		
Health and Nursing Services (5 *CCR* § 3051.12)	HNS		
Language and Speech Development and Remediation (5 *CCR* § 3051.1)	LSDR		
Music Therapy (5 *CCR* § 3051.21)	MT		
Occupational Therapy Services (5 *CCR* § 3051.6)	OT		
Orientation and Mobility Instruction (5 *CCR* § 3051.3)	OM		
Parent Counseling and Training (5 *CCR* § 3051.11)	PCT		
Physical Therapy Services (5 *CCR* § 3051.6)	PT		
Psychological Services Other Than Assessment and IEP Development (5 *CCR* § 3051.10)	PS		
Recreation Services (5 *CCR* § 3051.15)	RS		

LA SPEECH PATHOLOGY SERVICES, INC.
5280 East Beverly Blvd Suite C #106, Los Angeles, CA 90022
310.384.5317 | Fax: 310.943.3333 | laspeechguy@gmail.com

CONTRACTED RATE SHEET
Independent Education Evaluations
Related Services
2026-2027 SCHOOL YEAR
BURBANK UNIFIED SCHOOL DISTICT

***The cost per evaluation includes: Testing, on-site observation, records review (up to 2 hours), parental interview, comprehensive written report on findings, intake interview and IEP meeting in person, Skype/Zoom and/or via telephone.**

Language and Speech Evaluation	**$2300.00**
Language/Speech and AAC (Combination)	**$2600.00**
Assistive Technology (AT)	**$2300.00**
Augmentative Communication (AAC)	**$2300.00**
Bi-Lingual Speech and Language Evaluation (Spanish/English)	**$2500.00**
Occupational Therapy Evaluation (OT)	**$2300.00**
Language and Speech Evaluation (with translation services other than Spanish)	**$2500.00**
Psycho-Educational Assessment In-Depth (may include academic, adaptive functioning, cognition, psychological processing {auditory, visual, phonological processing}, social, emotion functioning)	**$5650.00**
Functional Behavioral Assessment	**$2750.00**

LA Speech Page 2

Initial/Triennial Psycho-Educational Assessments	**$2300.00**
Psycho-Educational and Functional Behavioral Assessment (Combination)	**$7000.00**
EHRMS/Social Emotional	**$2750.00**

NPA SPECIAL EDUCATION AND RELATED FEES

AAC or Assistive Technology Consultation		**$145.00 (hour)**
Language and Speech (LAS)	**Monolingual SLP**	**$105.00 (hour)**
***Itinerant In-Person @ School**	**Bilingual SLP**	**$110.00 (hour)**
8-hour workday		
Speech-Language Pathology Assistant (SLPA)		**$72.00 (hour)**
7-hour workday		
Certified Occupational Therapy Assistant (COTA)		**$72.00 (hour)**
7-hour workday		
Occupational Therapy (OT)		**$105.00 (hour)**
8-hour workday		
LAS or OT (for compensatory time)		**$145.00 (hour)**

Rate Sheet – Burbank Unified School District 2026-2027

Northpoint School

Basic Education – $156.07 per day

Individual Counseling - $81.83 per hour

Group Counseling - $43.65 per hour

Nurturing Nests
THERAPY CENTER

2026/2027 School Year - Update

Service Rates for Nurturing Nests Therapy	Rate	Unit
BII	$65.00	Per Hour
BII (RBT)	$68.00	Per Hour
BID (Master's)	$80.00	Per Hour
BID (BCBA)	$90.00	Per Hour
FBA	$90.00	Per Hour

PINE HEALTH

Exhibit A: Rates and Pricing

Position	All Inclusive Hourly Rate
Class/Site LVN	$72
Vent/Trach LVN	$78
Paraeducator	$44
Behavior Aide	$50
BT	$54
RBT	$62
BCBA	$115
SLP	$120
SLPA	$90
OT	$95
PT	$95
School Psychologist	$125
Licensed Counselor	$115

1. Holiday Rates. Holiday pay shall be calculated at a rate of 1.5 times (1.5x) the base hourly rate listed above for the following holidays in addition to any additional holidays recognized by Client: New Year's Day, Memorial Day, 4th of July, Labor Day, Thanksgiving Day, Christmas Day.

2. Overtime Rates. Overtime shall be calculated at a rate of 1.5 times (1.5x) the base hourly rate for all hours worked after 40 hours per week, or in accordance with state law. For applicable states, double time shall be charged at a rate of 2.0 times (2.0x) the base hourly rate. Unless otherwise defined by Client, weekly hours will begin with Sunday DAY shift and commence with Saturday NIGHT shift.

3. Mileage. If Staff is authorized and required to utilize a personal vehicle to perform Staff's assigned duties, the mileage shall be billed as pursuant to the current Federal mileage reimbursement rate.

4. Conversion Fee. Following confirmation of assignment or presentation of contractor for consideration, Client may hire Contractor only in accordance with this section. For this section's purpose, Contractor hours include all hours worked at Client pursuant to this agreement. After completing 1,372 hours worked on Assignment, Client may directly or indirectly hire or engage with any Contractor without payment of any conversion fee. Should Client hire or retain services of any Contractor prior to completing at least 1,372 hours, the below table shall be used as conversion fees.

Number of Hours Worked on Assignment	Conversion Fee Schedule (as Percentage of Annual Gross Compensation)
1,372 Hours +	**0%**
687 to 1,371 Hours	**10%**
0 to 686 Hours	**18%**

Hourly Rates

Speech Language Pathologist	$95-135
Occupational Therapist	$95-135
Special Education Teachers	Permanent Placement Fee (Let's Discuss)
Physical Therapy	$95-135
School Psychologist	$100-140
SLPA, PTA, OTA	$80-95
Paraprofessional/Instructional Assistant	$50-55
Registered Nurse	$75-95
Licensed Practical Nurse	$65-85
Certified Nursing Assistant	$55-$65
Board Certified Behavior Analyst - BCBA	$100-140
Registered Behavior Technician - RBT	$60-75
Sign Language Interpreter – SLI	$65-90
School Counselor	$75-105
Social Worker	$75-105
Other Disciplines	Let's Discuss

ProCare Therapy

QUEST THERAPY GROUP
your Premier Partner in Special Education

Special Education Service Rate Sheet

Related Service Rates Effective: School Year 2026-2027

Related Services	Regular Rate per hour	Rush Assessment per hour
Speech & Language Services (Therapy by SLPA)	**$89.00**	N/A
Speech & Language Assessment & IEP	**$112.35**	$117.50
Behavior Intervention - Implementation (BII)	**$57.00**	N/A
Behavior Therapy – Design/Consultation/Planning (BCBA services)	**$93.00**	$98.00
Occupational Therapy Services (assessment, therapy & IEP)	**$127.00**	$133.25
Academic Instruction/Teacher	**$82.75**	N/A
Psychological Services (PS services, assessments and IEP)	**$108.75**	$118.75
Individual Educational Evaluation Services (RSP services, assessments and IEP)	**$98.00**	$108.00
Student Counseling Services	**$82.75**	N/A
Credentialed School Nurse Services -RN/CSN	**$89.00**	$89.00
DHH Itinerant Services (D/HH)	**$147.00**	$157.00
Inclusion Services – Inclusion Assistant	**$57.00**	N/A

Billing Guidelines for Related Services – The following guidelines reflect weekly service limits unless stated otherwise.

Primary Action	Action Item	Average Billing Time (minutes)	Maximum Billing Time (minutes)
IEP Development Per Student	- Goal achievement pages - Present Levels,Goals - Services (in BUSD/SEIS/Welligent)	60 minutes per student	90-180 minutes per student (based on the complexity of the case, high profile etc.)
IEP Meeting	IEP Meeting	Start to End Time	Start to End Time
Compliance	Session Notes per direct service session (in SEIS/,Welligent)	10 minutes per student	15 minutes per student
Compliance Review	Addition and review of one new student to current caseload - reviewing plps, reviewing goals etc.	10 minutes per student per task	15 minutes per student per task
Compliance Review	Set-up new caseload of more than one student (applies to a new school site caseload assignment) - reviewing plps, reviewing goals etc.	Start to End Time	Start to End Time
Compliance Review	Progress reports in SEIS/Welligent & etc.	10 minutes per student	15 minutes per student
Consultation	Teacher/Parent Consultation and other approved requests from School Site (upon approval)	Start to End Time	Start to End Time
Direct Services	Provide direct services to students (include student initials)	Start to End Time	Start to End Time
Preparation	Preparation for direct services to students (include student initials)	10 minutes per student	15 minutes per student
Documentation- Prep Time/Treatment Planning	Prep Time (per school)	Direct Service Hours Per Week 1 day 2 or more days	Maximum Billing Per Week 1 hour per week 2 hours per week
Assessment/Report Writing excludes the IEP and IEP prep	All Assessment completion activities (with exception to student interview and direct observation) are classified as **Indirect Services**, and are performed outside of the site.	Billing Per Assessment Depending on areas Assessed	See notes section

Service Notes
- Maximum hours for indirect communication with school personnel (i.e. email, phone etc.) per site is 1.00hr/week. - Minimum 3 hours of direct and indirect services per visit per day. - In cases of student absence or refusal of service while the provider visits the site, billing will still apply for the scheduled session, including preparation time. - Any gaps between scheduled services resulting from the school site's provided schedule will be utilized for case-related service functions or will be categorized under direct services. - Maximum billing per assessment are as follows: LAS 12hrs, FBA 14hrs, OT 12hrs, PsychEd 16hrs, AAT 14hrs, IEE 14hrs, DHH 14hrs

RCM Health Care Services
A Division of RCM Technologies

Committed to Caring

SPECIALTY	Hourly Rate
Behavioral Interventionalist / Aide	$50.00/hr.
Paraprofessional / Paraeducator	$42.00/hr.
Registered Behavior Technician	$55.00/hr.
Board Certified Behavior Analyst	$102.00/hr.
Credentialed School Nurse	$105.00/hr.
Registered Nurse	$75.00/hr.
Licensed Vocational Nurse	$65.00/hr.
Certified Nursing Assistant	$45.00/hr.
Physical Therapist	$102.00/hr.
Occupational Therapist	$102.00/hr.
Speech Language Pathologist	$110.00/hr.
SLPA	$75.00/hr.
Social Worker	$90.00/hr.
School Psychologist	$105.00/hr.
Visual Impairment Services	$105.00/hr.
Audiologist	$105.00/hr.
Special Education Teacher Mild / Mod	$90.00/hr.
Special Education Teacher Mod / Sev	$95.00/hr.

Soliant Health

Rate Sheet for Soliant Health (May 2026)

Exceptional Student Contract Services

Discipline All-Inclusive Rate

Occupational Therapist	106-135
Speech Language Pathologist	110-165
Physical Therapist	105-135
COTA	84-110
SLPA	83-110
Physical Therapy Assistant	94-105

Teacher of Visually Impaired	90-100
Deaf/Hard of Hearing Teacher	90-100
Sign Language Interpreter	95-115
Orientation and Mobility Specialist	90-95
Special Education Teacher:	22,500 fee

School Psychologist	110-150
BCBA	115-130
Counselor	105-115
Social Worker	105-115
RBT	60-72
Behavior Aide/Para	55-67
RN	85-105
LPN/LVN	70-78

Rate negotiable and based on area and candidate's experience and qualifications

Our Hourly Bill rate covers the following expenses:

- **Relocation assistance**
- **Weekly payroll expenses**
- **Licensure assistance**
- **Continuing education**
- **United Healthcare**
- **Dental and Vision Insurance**
- **Liability Insurance**
- **Life Insurance**
- **Short and Long Term Disability**

Soliant Also Covers the following prior to a therapist starting in the district:

- **Extensive referencing**
- **Drug screen**
- **Background check**
- **Fingerprinting**
- **Whatever medical requirements the district has (TB, MMR, Physical, etc)**

Permanent Rate:

This is a one-time fee of 33% of the candidates 365 day salary including their benefits etc. This would be billed the first day the candidate works, and they would be a direct employee of your school district.

Jonathan Tubbs
Account Executive
Soliant Health
Local: (678) 837-1256
jonathan.tubbs@soliant.com
www.soliant.com

Soliant Health | Proud Sponsor

SPEECHcom
incorporated

SPEECHCOM, INC. RATE PROPOSAL

DATE: 4/17/2025

FOR: Burbank Unified School District

FROM: SpeechCom, Inc.
2850 Artesia Blvd. #107
Redondo Beach, CA 90278
(714) 206-1287

SERVICES PROVIDED

SpeechCom Inc is a therapist owned certified California Non-Public Agency (NPA). We employ licensed and/or credentialed educational service providers to deliver professional services to schools throughout California. Our services are billed at an hourly or daily rate, on a monthly basis.

SERVICE RATE:

Speech Pathologist (SLP) at school site	$105.00 - $110.00	per hour
Speech Pathologist (SLP) at school site (Bilingual)	$110.00 $115.00	per hour
Speech Therapy Services (i.e. in-home, library, individual student school site)	$145.00	per hour
Augmentative Communication (AAC) Treatment/Evaluation	$125.00	per hour
Speech Language Pathology Assistant (SLPA) at school site	$75.00	per hour
Occupational Therapist (OT)	$105.00 - $110.00	per hour
Occupational Therapy Assistant (COTA)	$75.00	per hour
Social Worker (CSW)	$90.00 - $105.00	per hour
School Psychologist	$125.00	per hour
School Nurse (RN)	$90.00 - $105.00	per hour
Licensed Vocational Nurse (LVN)	$75.00	per hour
Special Education Teacher in-school	$95.00 - $105.00	per hour
home hospital (in-home)	$145.00	per hour
Physical Therapist	$105.00 - $110.00	per hour

Child Counseling and Behavior Therapy Clinic, Inc.
15760 Ventura Blvd., Suite 1060
Encino, CA 91436
Phone 818 788-2388
Fax 818 788-3875

- **Rate / Fee Schedule**
  - BII = $68.18
  - BID = $73.43
  - FBA = $3850

BEHAVIOR THERAPY CLINIC

S.T.A.R. Academy – NPA/NPS
Rate Sheet 2026-2027

All services are provided by fully credentialed and/or licensed professionals

Compensatory Services***	Rate
Supplemental Academic Services (SAS) or Transition Services	$101 Per Hour
Occupational Therapy	$180 Per Hour
Language and Speech Services (LAS)/Therapy	$180 Per Hour
ERICS – ERHMS Counseling	$159.15 Per Hour
Parent Training	$159.15 Per Hour
Educational Counseling (1:1)	$159.15 Per Hour

***School District and Parent/Guardian will receive a final Summary Report upon completion of each authorized compensatory service/contracted hours. Summary reports will be provided and billed on the last hour/session for each student's services. Service authorizations over 30 hours will include quarterly progress reports.**

IEP-Based Services/Interim Placement**	Rate
Home Instruction/Resource Specialist Program (RSP) Services - SAI	
SAS/SAI – Direct Service (5 or more hours per week)	$133 Per Hour
SAS/SAI - RSP – Direct Service (Less than 5 hours per week)	$133 Per Hour
Prep/IEP: Includes updating goals progress, program planning, and IEP attendance Allocation: 1 hour for every 5 hours of direct service allocated	$133 Per Hour
Occupational Therapy (OT)	$180 Per Hour
OT - Prep/IEP Bundle Includes updating goals progress, program planning, and IEP attendance (10 hours per year)	$180 Per Hour
Language and Speech Services/Therapy (LAS)	$180 Per Hour
LAS - Prep/IEP Bundle Includes updating goals progress, program planning, and IEP attendance (10 hours per year)	$180 Per Hour
ERICS – ERHMS Counseling	$159.15 Per Hour
ERICS - Prep/IEP Bundle Includes updating goals progress, program planning, and IEP attendance (10 hours per year)	$159.15 Per Hour

IEP-Based Services Assessments	Rate
Adapted PE – Review of Records	$636.60 Per eval.
Adapted PE – Triennial Assessment	$1061 Per evaluation
ERHMS/ERICS/DIS Counseling – Review of Records	$638.66 Per eval.
ERHMS/ERICS/DIS Counseling – Triennial Assessment	$1061 Per evaluation
Language and Speech Assessment – Review of Records	$638.66 Per eval.
Language and Speech Assessment – Triennial Assessment	$1061 Per evaluation
Occupational Therapy – Review of Records	$638.66 Per eval.
Occupational Therapy – Triennial Assessment	$1061 Per evaluation
SAS - Triennial Assessment –Comprehensive Academic Assessment	$638.66 Per eval.
SAS - Triennial Assessment – Review of Records	$1061 Per evaluation

****Cancellation Policy (CC24) - If the school or parent does not provide 24 hours-notice of student's absence to Haynes Family of Programs, we will automatically bill a minimum of 50% of scheduled hours. For example, if student's services are scheduled from 9:30 am to 11:30 pm (2 hours), we will bill district of student's non-attendance/absence a minimum of 1 hour**

HAYNES

S.T.A.R Page 2

Behavior Services – School/Home/Community Based Services**	Rate
Behavior Intervention Development (BID) – To Accompany BII Services	
Supervision to Accompany BII Services (1 hour BID for every 5 hours of BII direct service allocated.)	$143.18 Per Hour
Consultation with IEP Team/Parent	$143.18 Per Hour
Program Development/Training	$143.18 Per Hour
Behavior Intervention Implementation (BII)	
1:1 School/Community	$95.80 Per Hour
Transportation	$95.80 Per Hour

****Cancellation Policy (CC24) - If the school or parent does not provide 24 hours-notice of student's absence to Haynes Family of Programs, we will automatically bill a minimum of 50% of scheduled hours. For example, if student's services are scheduled from 9:30 am to 11:30 pm (2 hours), we will bill district of student's non-attendance/absence a minimum of 1 hour**

Staff Training – Behavior	Rate
Behavior Intervention Fundamentals – Group (Max 20 participants)	$1591.50 flat rate
Behavior Intervention Plan – BIP Student Specific	
Individual (e.g. 1:1 aide training/teacher) includes observation, training, and follow-up	$1061 per student
Group (e.g. IEP Team) includes observation, training, and follow-up	$1591.50 per student

Assessments – Initials and IEEs	Rate
Adapted PE Assessment	$2070.50 Per evaluation
ERHMS Assessment	$2173.50 Per evaluation
Language and Speech Assessment	$2173.50Per evaluation
Language and Speech Assessment - AAC Assessment (Check for Provider Availability)	$2420.75 Per evaluation
Occupational Therapy Assessment	$2173.50 Per evaluation
Occupational Therapy Assessment – AT Assessment (Check for Provider Availability)	$2420.75 Per evaluation
Transition Assessment	$1967.50 Per evaluation
Functional Behavioral Assessment – One Location (School or Home)	$2915.15 Per evaluation
Functional Behavioral Assessment – Two Locations (School & Home)	$3195.25 Per evaluation
Functional Behavioral Assessment with 1:1 Aide Determination (School Based)	$2915.15 Per evaluation
Dyslexia/ Dysgraphia Evaluation	$2523.75 Per Evaluation
Targeted Evaluation - one area of concern- preschool transition social-emotional, academic, adaptive behavioral	$2173.50 Per evaluation
Rush Fee (Less than 30 days)	$798 per evaluation

*****Mileage will be billed for assessments in excess of 100 miles for providers location**

26-27 SYCAMORES RELATED SERVICE FEES

Services and Related Services	Abbreviation	Fee
Adapted Physical Education	APE	
Assitstive Technology Service	ATS	
Adiological Services	AS	
Behavior Intervention - Design and Planning	BID	354.84 per hr.
Behavior Intervention - Implementation	BII	266.95 per hr.
Counseling and Guidance Services	CG	354.84 per hr.
Early Education Programs for Children with Disabilities	EE	
Health and Nursinig Services	HNS	
Language and Speech Development and Remediation	LSDR	
Music Therapy	MT	
Non-Medical Care & Room and Board	NMCRB	
Occupational Therapy Seravices	OT	
Orientation and Mobility Instruction	OM	
Parent Counseling and Training	PCT	354.84 per hr.
Physical Therapy Services	PT	
Psychological Services other Than Assessmetn and IEP Development	PS	354.84 per hr.
Recreation Services	RS	
Social Worker Services	SW	266.95 per hr.
Specialized Driver Training Instruction	SDTI	
Specialized Services for Low Incidence	LI	
Specially Designed Vocational Education and Career Development	VECD	
Transcriber Services	TS	
Vision Sevices	VS	
ESS Services Tier I	ESS	4,587.55 monthly
ESS Sevices Tier II	ESS	2,773.60 monthly
Full Classroom Supports (Level I)	CS - F	
Partial Classroom Supports (Level II)	CS - P	
Modified Classroom Supports (Level III)	CS - M	

Derek T. Tong O.D. FAAO FCOVD FNORA

Practice Name ("Provider"): Center for Vision Development Optometry Inc.
2700 E. Foothill Blvd., Ste. 207
Pasadena, CA 91107
Phone: (626) 578-9685
Fax: (626) 578-9737
Email: odtong@tongvision.com

Rate Sheet

Effective July 1, 2026

Vision Assessment **$1,450**

Includes a summary report to the IEP team

IEP meeting by telephone/Zoom (up to 1 hour) **$295**

Additional services requested will be charged at the rate of $295/hour in half-hour increments.

Vision Therapy

50-minutes session **$225 per session**

Billing Policies:

Payment is expected within 30 days invoice is received.

Outstanding balance past 60 days from the date invoice is received is subject to an interest of 1.5%

The rate for Vision Therapy if prepaid prior to services being rendered is **$1,750** for each unit of 10 sessions

Villa Esperanza

		26-27
Basic Education Programs : 5 – 22 years old	per diem	$ 188.96
Pro-rated		$ 31.49
Speech:		
Individual (Pull-out or Classroom)	per hour	$ 189.50
Group	per hour	$ 189.50
Consultation	per hour	$ 189.50
Assistive Technology	per hour	$ 189.50
Assessments and Evaluations	Each	$ 1,075.00
Behavior Analysis and Intervention:		
Individual	per hour	$ 153.65
Consultation	per hour	$ 153.65
1:1 Aide	per hour	$ 42.00
Functional Behavior Assessment	Each	$ 1,075.00
Occupational Therapy:		
Occupational Therapy Services		
Individual (Pull-out or Classroom):	per hour	$ 189.50
Group	per hour	$ 189.50
Consultation	per hour	$ 189.50
Assessments and Evaluations	Each	$ 1,075.00
Lunch Program:		
Daily Lunch	per lunch	$ 16.00

Burbank Unified School District
Instructional Services

REPORT TO THE BOARD

TO:	Members of the Board of Education
FROM:	Peter Knapik, Assistant Superintendent of Educational Services
PREPARED	Juan Noguera, Director of Adult Education
BY:	Laura Erisman, Administrative Secretary
SUBMITTED	June 25, 2026
BY: DATE:	Amendment and Ratification of Agreement between Burbank Adult School and Telemedcore
SUBJECT:	

Background:

Burbank Adult School (BAS) has committed to providing high-quality instruction to ensure that all its students acquire the skills to become successful individuals in the community. With this mission in mind, BAS medical instructors have researched and piloted a new learning platform, Telemedcore. Developed by industry experts and exclusively designed for adult learners, Telemedcore provides resources for students in the medical field, specifically for students in Clinical Medical Assistant, Certified Nurse Assistant, and Medical Terminolgy classes. This platform is designed to support adult learners with clinical practice management and independent practice to ensure students are ready for the job market. This allows adult educators to create customized assignments for individual students or an entire class, and the flexibility to deploy them on-site or via distance learning.

Discussion/Issues:

Having piloted Telemedcore software in the Medical Terminology class, BAS instructors believe that this software will enhance the student learning experience at BAS. Teachers in the medical courses can use the software as a supplement curriculum to ensure better performance when students work towards their goals. When using the Telemedcore Software, students can work on their own, completing asynchronous work which will expand and reinforce their learning. Students are assigned seats on the platform, allowing them access to extra curricular activities that they can complete in class or during their free time at work or home, increasing the level of engagement and keeping them on target to accomplish their goals. Everything is constantly changing in the healthcare industry, and we have to change with it in order to continue offering a unique learning experience for our adult learners.

Fiscal Impact:

Not to exceed $58,012.50 paid from the California Adult Education funds.

Recommendation:

Peter Knapik, Assistant Superintendent of Educational Services, recommends that the Board of Education amend and ratify the agreement between Burbank Adult School and Telemedcore to be effective on June 15, 2026, not to exceed $58,012.50 (11.0-63910.0-41104-10000-5840-5330000) and the authority to sign the Agreement be exercised pursuant to BUSD – AR 3314 as presented.

Telemedcore
2108 N ST STE N, Sacramento, CA 95816
contact@telemedcore.com · telemedcore.com VERSION 1.2

EDUCATIONAL INSTITUTION SEAT LICENSE AGREEMENT

TELEMEDCORE PLATFORM — SOFTWARE AS A SERVICE

Agreement Version	1.2
Effective Date (MM/DD/YYYY)	06/15/2026
Agreement Number	EDU-SLA-TMC-BUR-001

IMPORTANT NOTICE: This Agreement constitutes a legally binding contract. Each party should review this Agreement with qualified legal counsel before executing.

PARTIES

LICENSOR: Telemedcore, with its principal place of business at 2108 N ST STE N, Sacramento, CA 95816 ("Company," "Licensor," "we," "us," or "our").

LICENSEE:

Institution Legal Name	BURBANK ADULT SCHOOL
DBA / Common Name *(if applicable)*	
Street Address	3811 W. ALLAN AVE.
Address Line 2 *(Suite, Bldg., Dept.)*	
City	BURBANK
State	CA
ZIP Code	91505

1183

State of Incorporation / Organization	CALIFORNIA
Tax ID / EIN (XX-XXXXXXX)	95-6000418
Authorized Representative	DR. PETER KNAPIK
Title	ASSISTANT SUPERINTENDENT

("Institution," "Licensee," "Client," "you," or "your").

Each individually a "Party" and collectively the "Parties."

RECITALS

WHEREAS, Company has developed and operates a multi-tenant, cloud-based clinical practice management platform, Telemedcore (the "Platform"), designed, among other uses, to serve as a clinical practice management training and simulation tool for healthcare and nursing educational institutions; and

WHEREAS, Institution is an accredited educational institution offering healthcare, nursing, medical billing, health information management, or related programs and desires to license access to the Platform for educational and training purposes on a per-seat, annual basis; and

WHEREAS, the Parties desire to set forth the terms and conditions under which Institution and its Authorized Users shall access and use the Platform;

NOW, THEREFORE, in consideration of the mutual covenants, promises, and agreements contained herein, and for other good and valuable consideration, the receipt and sufficiency of which are hereby acknowledged, the Parties agree as follows:

ARTICLE 1 — DEFINITIONS

1.1 "**Academic Term**" means a semester, quarter, trimester, or other instructional period as defined by Institution's academic calendar and communicated to Company in writing.

1.2 "**Authorized User**" means any individual who is (a) a current student enrolled in an Eligible Program at Institution, (b) a faculty member, instructor, teaching assistant, or adjunct professor employed by or contracted with Institution for the purpose of delivering instruction in an Eligible Program, or (c) an administrative staff member designated by Institution's Authorized Representative, in each case who has been assigned credentials to access the Platform under this Agreement.

1184

1.3 "**Confidential Information**" means all non-public information disclosed by either Party to the other, whether orally, in writing, or electronically, that is designated as confidential or that reasonably should be understood to be confidential given the nature of the information and circumstances of disclosure, including but not limited to: business plans, pricing, technical data, software code, trade secrets, customer lists, financial information, security configurations, and the terms of this Agreement. Confidential Information does not include information that: (a) is or becomes publicly available through no fault of the receiving Party; (b) was known to the receiving Party prior to disclosure without obligation of confidentiality; (c) is independently developed by the receiving Party without use of the disclosing Party's Confidential Information; or (d) is rightfully obtained from a third party without restriction on disclosure.

1.4 "**Documentation**" means all user manuals, training materials, help files, API documentation, release notes, and other instructional materials made available by Company in connection with the Platform, whether in electronic or printed form.

1.5 "**Educational Data**" means all data entered into, generated by, or stored within the Platform by or on behalf of Institution or its Authorized Users in connection with this Agreement, including but not limited to simulated patient records, practice scenarios, user-generated SOAP notes, billing exercises, scheduling configurations, and assessment results. Educational Data expressly excludes Protected Health Information as defined by HIPAA.

1.6 "**Eligible Program**" means any academic program, course, certificate, or continuing education offering operated by Institution in the fields of healthcare administration, nursing, medical billing and coding, health information management, clinical practice management, or substantially similar disciplines, as specified in the Order Form.

1.7 "**Initial Term**" has the meaning set forth in Section 8.1.

1.8 "**Intellectual Property Rights**" means all patents, copyrights, trademarks, trade secrets, trade dress, moral rights, rights of publicity, and all other intellectual and industrial property rights of any kind, whether registered or unregistered, and all applications, renewals, extensions, and restorations thereof, now or hereafter in force and effect worldwide.

1.9 "**Licensed Seats**" means the maximum number of concurrent Authorized Users permitted to access the Platform at any given time during the Subscription Term, as specified in Exhibit B (Order Form).

1.10 "**Malicious Code**" means any virus, worm, Trojan horse, ransomware, spyware, adware, or other harmful or malicious code, file, script, agent, or program.

1.11 "**Per-Seat Fee**" means the annual fee charged per Licensed Seat, as specified in Exhibit B (Order Form).

1.12 "**Platform**" means the Company's cloud-based clinical practice management software application, Telemedcore, including all modules, features, updates, patches, and enhancements made generally

available by Company during the Subscription Term, delivered as a Software-as-a-Service solution and configured for educational tenant use.

1.13 "**Renewal Term**" has the meaning set forth in Section 8.2.

1.14 "**Service Level Agreement**" or "**SLA**" means the service availability and support commitments set forth in Article 4A.

1.15 "**Simulated Patient Data**" means fictitious patient demographic, clinical, billing, and scheduling data created by Authorized Users within the Platform for training and instructional purposes. Simulated Patient Data must not contain any information derived from or referencing actual patients, living or deceased. Company does not provide, curate, or warrant the accuracy of any simulated data sets.

1.16 "**Subscription Term**" means the Initial Term together with any Renewal Terms.

1.17 "**Subscription Year**" means each consecutive twelve (12) month period commencing on the Effective Date or any anniversary thereof.

ARTICLE 2 — GRANT OF LICENSE

2.1 License Grant. Subject to the terms and conditions of this Agreement and timely payment of all applicable fees, Company hereby grants to Institution a non-exclusive, non-transferable, non-sublicensable, revocable, limited right to access and use the Platform during the Subscription Term, solely for Institution's internal educational, instructional, and training purposes in connection with Eligible Programs, up to the number of Licensed Seats specified in Exhibit B.

2.2 Educational Use Only. The license granted herein is restricted exclusively to educational and training use. Institution acknowledges and agrees that:

(a) The Platform, as configured for educational tenants, is designed for **simulated clinical practice management** using fictitious patient data and shall not be used to manage, store, process, or transmit actual patient records, Protected Health Information (as defined by HIPAA), or real clinical data of any kind;

(b) No real patients shall be registered, scheduled, treated, billed, or referenced within the Platform under this Agreement;

(c) Institution shall not use the Platform to conduct actual medical practice, submit real insurance claims, generate real prescriptions, or perform any function that would constitute the practice of medicine, nursing, or any other licensed healthcare profession;

(d) Institution assumes sole responsibility for ensuring that no Authorized User enters real patient data, personally identifiable health information, or any data subject to HIPAA, FERPA, or other privacy regulations into the Platform.

(e) **Acknowledgment of Platform Capabilities.** Institution acknowledges that the Platform contains functional modules — including but not limited to electronic health records, e-prescribing, insurance claims submission, billing, and patient portal features — that replicate the capabilities of systems used in actual clinical practice. The presence of such capabilities within the Platform does not constitute an authorization, license, or permission for Institution or any Authorized User to use the Platform for actual clinical purposes, to process real patient data, or to engage in any activity that would require compliance with HIPAA, state medical practice acts, or other healthcare regulations. The educational tenant configuration is provided solely to enable realistic simulation and training; Institution's use remains governed by the restrictions set forth in this Section 2.2.

2.3 Seat Allocation. Institution may allocate and reallocate Licensed Seats among Authorized Users at its discretion, provided that the total number of active Authorized User accounts does not exceed the Licensed Seats at any time. Institution shall manage Authorized User provisioning and deprovisioning through the Platform's administrative console.

2.4 Reservation of Rights. Company retains all right, title, and interest in and to the Platform, Documentation, and all related Intellectual Property Rights. No rights are granted to Institution except as expressly set forth in this Agreement. All rights not expressly granted are reserved by Company.

2.5 Restrictions. Institution shall not, and shall not permit any Authorized User or third party to:

(a) Copy, modify, adapt, translate, reverse engineer, decompile, disassemble, or create derivative works based on the Platform or any portion thereof;

(b) License, sublicense, sell, resell, rent, lease, transfer, assign, distribute, time-share, or otherwise commercially exploit or make the Platform available to any third party other than Authorized Users;

(c) Use the Platform to process data on behalf of any third party, or operate the Platform as a service bureau;

(d) Remove, alter, or obscure any proprietary notices, labels, or marks on the Platform or Documentation;

(e) Use the Platform in violation of any applicable law, regulation, or third-party right;

(f) Introduce Malicious Code into the Platform or attempt to gain unauthorized access to the Platform, its related systems, or networks;

(g) Interfere with or disrupt the integrity or performance of the Platform or any data contained therein;

(h) Use the Platform to develop a competing product or service, or assist any third party in doing so;

(i) Circumvent or attempt to circumvent any technical limitations, access controls, or usage restrictions built into the Platform;

(j) Access the Platform through automated means (bots, scrapers, crawlers) except through APIs expressly provided and documented by Company;

(k) Use the Platform in any manner that could damage, disable, overburden, or impair the Platform or interfere with any other party's use of the Platform.

ARTICLE 3 — FEES AND PAYMENT

3.1 Per-Seat Annual Fee. Institution shall pay the Per-Seat Fee multiplied by the number of Licensed Seats for each Subscription Year, as specified in Exhibit B (the "Annual Subscription Fee"). The Annual Subscription Fee for the Initial Term is due and payable as set forth in Section 3.3.

3.2 Fee Calculation.

Formula	Annual Subscription Fee = Per-Seat Fee × Licensed Seats
Per-Seat Fee	$ 350 /seat/year
Licensed Seats	150 seats
Annual Subscription Fee	**$ 52,500**

3.3 Payment Terms.

(a) **Initial Payment.** The Annual Subscription Fee for the first Subscription Year is due within thirty (30) days of the Effective Date. Access to the Platform will be provisioned upon receipt of payment. For institutions approved for purchase order billing, provisioning will commence upon receipt of a fully executed, unconditional purchase order from Institution's authorized procurement office, accepted by Company in its sole discretion.

(b) **Renewal Payments.** For each Renewal Term, the Annual Subscription Fee is due thirty (30) days prior to the commencement of the applicable Subscription Year.

(c) **Payment Method.** All payments shall be made in United States Dollars (USD) by: (i) wire transfer or ACH to the account designated by Company; (ii) check payable to Company; or (iii) purchase order, provided Institution has been approved for purchase order billing by Company. Company also accepts payment by credit card, subject to a processing surcharge of two and one-half percent (2.5%) of the transaction amount.

(d) **Taxes.** All fees are exclusive of applicable taxes. Institution is responsible for all sales, use, excise, value-added, withholding, and similar taxes and governmental charges, except for taxes based on Company's net income. If Institution is tax-exempt, it shall provide a valid exemption certificate prior to the Effective Date.

3.4 Late Payment. Any undisputed amounts not received by the due date shall accrue interest at the lesser of: (a) one and one-half percent (1.5%) per month; or (b) the maximum rate permitted by

applicable law, calculated from the due date until the date of actual payment. Company reserves the right to suspend access to the Platform if any undisputed invoice remains unpaid for more than forty-five (45) days past its due date, upon fifteen (15) days' prior written notice to Institution.

3.5 Seat Adjustments.

(a) **Mid-Term Increases.** Institution may purchase additional Licensed Seats at any time during a Subscription Year by written request to Company. Additional seats shall be invoiced on a pro-rata basis for the remainder of the then-current Subscription Year, calculated from the date of activation to the end of the Subscription Year.

(b) **Mid-Term Decreases.** Seat reductions during a Subscription Year shall take effect at the commencement of the next Subscription Year. No refunds or credits shall be issued for unused seats during a current Subscription Year. Institution must provide written notice of any seat reduction at least sixty (60) days prior to the commencement of the next Subscription Year.

(c) **Minimum Seats.** The minimum number of Licensed Seats under this Agreement is ten (10). If Institution's seat count falls below ten (10) at any renewal, Company may, at its sole discretion, either (i) maintain pricing at the ten-seat minimum, or (ii) transition Institution to a standard subscription tier under Company's then-current pricing.

3.6 Fee Escalation. Company may increase the Per-Seat Fee for any Renewal Term by providing written notice to Institution at least ninety (90) days prior to the commencement of the applicable Renewal Term. Any increase shall not exceed the greater of: (a) five percent (5%) of the then-current Per-Seat Fee; or (b) the percentage increase in the Consumer Price Index for All Urban Consumers (CPI-U), U.S. City Average, as published by the Bureau of Labor Statistics, for the twelve (12) month period ending sixty (60) days prior to the Renewal Term commencement date.

3.7 Disputed Invoices. If Institution disputes any portion of an invoice in good faith, Institution shall: (a) pay the undisputed portion by the due date; (b) provide written notice of the dispute, with reasonable supporting detail, within fifteen (15) days of receipt of the invoice; and (c) cooperate with Company to resolve the dispute promptly. Company shall not suspend access based solely on a disputed amount while the dispute is being resolved in good faith.

ARTICLE 4 — IMPLEMENTATION AND SUPPORT

4.1 Provisioning. Company shall provision Institution's educational tenant environment within three (3) to five (5) business days of receipt of: (a) this fully executed Agreement; (b) a completed Exhibit B (Order Form); and (c) receipt of payment or, for institutions approved for purchase order billing, a qualifying purchase order per Section 3.3(a).

4.2 Onboarding. Company shall provide, at no additional charge:

(a) One (1) virtual onboarding session of up to two (2) hours for Institution's administrative staff and designated faculty;

(b) Access to self-service Documentation and training resources;

(c) Configuration assistance for Institution's academic calendar and program structure.

Institution is responsible for creating and managing its own simulated patient data, practice scenarios, and training records within the Platform. Company does not provide pre-loaded data sets.

4.3 Technical Support. Company shall provide technical support to Institution's designated administrative contacts (not to exceed three (3) individuals) during the Subscription Term via:

(a) **Email Support:** Available at support@telemedcore.com, Monday through Friday, 9:00 AM to 5:00 PM Pacific Time, excluding Company-observed holidays. Target response time: one (1) business day.

(b) **Knowledge Base:** Self-service online help center available 24/7.

(c) **Priority Support (Optional Add-On):** Dedicated support representative, phone support, and enhanced response SLA, available for an additional fee as specified in Exhibit B.

4.4 Maintenance and Updates. Company shall maintain the Platform in accordance with the Service Level Agreement set forth in Article 4A. Company may, from time to time, update, modify, or enhance the Platform. Company shall provide Institution with reasonable advance notice of any material changes to Platform functionality that may affect educational workflows.

4.5 Training Materials License. Company grants Institution a non-exclusive, non-transferable license to use, reproduce, and distribute the Documentation solely for internal instructional purposes within Eligible Programs. Institution may create supplementary instructional materials that reference the Platform, provided such materials clearly identify Company as the owner of the Platform and do not disclose Confidential Information.

ARTICLE 4A — SERVICE LEVELS

4A.1 Platform Availability. Company shall maintain Platform availability of **99.9%** during each calendar month, measured as:

```
Availability % = ((Total Minutes in Month - Downtime Minutes) / Total Minutes in Mont
h) x 100
```

The following are excluded from Downtime:

(a) Scheduled maintenance windows, provided Company gives at least forty-eight (48) hours advance notice; maintenance is performed between 12:00 AM and 6:00 AM ET;

(b) Force majeure events under Section 13.3;

(c) Issues attributable to Institution's network, hardware, or Authorized User error;

(d) Third-party service provider outages beyond Company's reasonable control.

4A.2 Service Credits. If Availability falls below the monthly target, Institution shall receive a service credit applied against the next invoice:

MONTHLY AVAILABILITY	SERVICE CREDIT (% OF MONTHLY FEE)
99.5% – 99.89%	5%
99.0% – 99.49%	7%
95.0% – 98.99%	10%
Below 95.0%	10%

Monthly Fee = Annual Subscription Fee ÷ 12.

Service credits must be requested in writing within thirty (30) days of the end of the affected month. Credits shall not exceed 10% of the applicable monthly fee and shall not be refunded as cash. Service credits are Institution's sole and exclusive remedy for Availability shortfalls.

4A.3 Support Response Times. Company shall target the following response and resolution times:

SEVERITY	DESCRIPTION	TARGET RESPONSE	TARGET RESOLUTION
Critical (P1)	Platform unavailable for all Authorized Users	4 hours	8 hours
High (P2)	Major feature unavailable; no workaround	4 hours	1 business day
Medium (P3)	Feature impaired; workaround available	1 business day	3 business days
Low (P4)	Minor issue, cosmetic, or enhancement request	2 business days	Next release cycle

Response times apply during standard support hours (Monday through Friday, 9:00 AM to 5:00 PM Pacific Time, excluding Company-observed holidays). Critical (P1) issues are monitored during support hours only unless the Priority Support add-on is active.

ARTICLE 5 — DATA RIGHTS AND PRIVACY

5.1 Educational Data Ownership. As between the Parties, Institution retains all right, title, and interest in and to Educational Data. Company shall not access, use, or disclose Educational Data except: (a) as necessary to provide the Platform and support services under this Agreement; (b) in anonymized, aggregated form for product improvement and analytics (with no ability to identify Institution or any Authorized User); or (c) as required by law.

5.2 No Protected Health Information. The Parties expressly acknowledge and agree that:

(a) The Platform, as configured for educational tenant use, is **not intended to receive, store, or process Protected Health Information** ("PHI") as defined by the Health Insurance Portability and Accountability Act of 1996, as amended ("HIPAA"), and its implementing regulations at 45 C.F.R. Parts 160 and 164;

(b) No Business Associate Agreement ("BAA") is required or provided under this Agreement;

(c) Institution bears sole responsibility for ensuring that no Authorized User enters real PHI into the Platform. Company assumes no obligation to monitor Educational Data for PHI. However, in the event Company discovers or reasonably suspects the presence of PHI within Institution's tenant environment, Company reserves the right, without prior notice to Institution, to immediately quarantine, redact, or permanently delete such data to protect Company's compliance obligations, platform integrity, and the interests of other platform users. Company shall notify Institution within forty-eight (48) hours of any such action, describing the nature of the data involved and the remedial action taken. Institution waives any claim for damages arising from Company's good-faith exercise of this right. This right is in addition to, and not in limitation of, Company's termination rights under Section 8.3;

(d) Company is not a Covered Entity or Business Associate with respect to Institution's use of the Platform under this Agreement;

(e) This Section does not limit Company's obligations with respect to its medical practice tenants, which are governed by separate agreements and BAAs.

5.3 FERPA Compliance. To the extent that Educational Data includes "education records" as defined under the Family Educational Rights and Privacy Act ("FERPA," 20 U.S.C. Section 1232g), Institution designates Company as a "school official" with a "legitimate educational interest" in accessing such records solely for the purpose of providing the Platform under this Agreement. Company agrees to:

(a) Use education records only for the purposes set forth in this Agreement;

(b) Not disclose education records to third parties except as directed by Institution or as required by law;

(c) Maintain reasonable administrative, technical, and physical safeguards to protect education records against unauthorized access, use, or disclosure;

(d) Return or destroy education records upon termination of this Agreement, as directed by Institution (subject to Section 8.5).

5.4 Student Data Privacy. Company shall comply with applicable state student data privacy laws, including but not limited to the California Student Online Personal Information Protection Act (SOPIPA), New York Education Law Section 2-d, and similar statutes in the state(s) in which Institution operates, to the extent applicable to Company's provision of the Platform.

COPPA. Institution represents and warrants that no Authorized User is under thirteen (13) years of age, and Institution shall not grant Platform access to any individual under 13. Company does not knowingly collect personal information from children under 13 within the meaning of the Children's Online Privacy Protection Act ("COPPA"), 15 U.S.C. § 6501 et seq. If Institution operates programs that include dual-enrollment students or other minors aged 13 through 17, Institution shall obtain any parental or guardian consent required by applicable law prior to granting such individuals access to the Platform.

5.5 Data Security. Company shall maintain industry-standard administrative, technical, and physical safeguards to protect Educational Data, including but not limited to:

(a) Encryption of data at rest (AES-256 or equivalent) and in transit (TLS 1.2 or higher);

(b) Logical tenant isolation via row-level security policies;

(c) Role-based access controls;

(d) Regular vulnerability assessments;

(e) Annual security review and risk assessment, with a summary available to Institution upon written request;

(f) Backup and recovery processes, including automated backup procedures, logical data redundancy, and disaster recovery capabilities designed to protect Educational Data against loss or corruption. Specific recovery time objectives, recovery point objectives, and backup retention periods are operational targets described in Company's then-current infrastructure documentation, available to Institution upon written request. Such specifications are subject to change with reasonable advance notice to Institution.

5.6 Data Breach Notification. In the event of a confirmed unauthorized access to or disclosure of Educational Data ("Security Incident"), Company shall:

(a) Notify Institution in writing within seventy-two (72) hours of Company's confirmation of the Security Incident;

(b) Provide a description of the nature of the incident, the categories and approximate number of records affected, the likely consequences, and the measures taken or proposed to address the incident;

(c) Cooperate with Institution in investigating and remediating the incident;

(d) Comply with applicable breach notification laws.

5.7 Data Location. Educational Data shall be stored and processed within the continental United States. Company shall not transfer Educational Data outside the United States without Institution's prior written consent.

5.8 Right to Audit. Company reserves the right, upon fifteen (15) days' prior written notice to Institution, to conduct an audit of Institution's use of the Platform to verify compliance with the educational use restrictions set forth in Section 2.2 and the PHI prohibition set forth in Section 5.2. Such audit may include:

(a) Automated scanning of Institution's tenant data for patterns indicative of real patient information, including but not limited to valid Social Security Numbers, real insurance policy numbers, National Provider Identifiers associated with actual licensed providers, and structured clinical data matching known patient record formats;

(b) Review of Institution's Authorized User access logs and usage patterns;

(c) A written certification of compliance, signed by Institution's Authorized Representative, confirming that no real PHI has been entered into the Platform; and

(d) On-site or remote inspection of Institution's internal policies and training materials related to Platform use, upon reasonable scheduling with Institution.

Institution shall cooperate fully with any such audit and provide reasonable access to information and personnel as requested. Audits shall be conducted during normal business hours and shall not unreasonably interfere with Institution's operations. Company shall bear its own costs of conducting such audits, except that if an audit reveals a material violation of Section 2.2 or Section 5.2, Institution shall reimburse Company for the reasonable costs of the audit. Company shall conduct no more than one (1) audit per Subscription Year, unless a prior audit revealed a material violation, in which case Company may conduct follow-up audits as reasonably necessary to verify remediation.

ARTICLE 6 — INTELLECTUAL PROPERTY

6.1 Platform Ownership. The Platform, including all software, algorithms, user interfaces, designs, architecture, documentation, and all modifications, enhancements, and derivative works thereof, constitutes the exclusive Intellectual Property of Company. Nothing in this Agreement shall be construed to transfer any Intellectual Property Rights in the Platform to Institution.

6.2 Feedback. If Institution or any Authorized User provides suggestions, enhancement requests, recommendations, or other feedback regarding the Platform ("Feedback"), Company shall be free to use, incorporate, modify, and commercially exploit such Feedback without obligation, attribution, or compensation to Institution. Institution hereby assigns to Company all right, title, and interest in and to any Feedback.

6.3 Institution Marks. Institution grants Company a limited, non-exclusive, revocable license to use Institution's name, logo, and trademarks solely for the purpose of identifying Institution as a customer in Company's marketing materials, client lists, and case studies, subject to Institution's reasonable trademark usage guidelines. Institution may revoke this license at any time upon thirty (30) days' written notice; provided, however, that Company may continue to use Institution's name in materials already printed or published as of the date of revocation notice for a period of sixty (60) days following receipt of such notice.

6.4 Open-Source Components. The Platform may incorporate open-source software components. A list of open-source components and their respective licenses is available at Company's request. Company warrants that no open-source component included in the Platform imposes obligations on Institution that would conflict with the terms of this Agreement.

ARTICLE 7 — REPRESENTATIONS, WARRANTIES, AND DISCLAIMERS

7.1 Company Warranties. Company represents and warrants that:

(a) **Authority.** Company has the full right, power, and authority to enter into this Agreement and to grant the rights and licenses granted herein;

(b) **Platform Performance.** During the Subscription Term, the Platform shall perform materially in accordance with the Documentation and the SLA;

(c) **Malicious Code.** Company shall use commercially reasonable efforts to ensure that the Platform does not contain any Malicious Code;

(d) **Compliance.** Company shall comply with all laws and regulations applicable to its provision of the Platform, including applicable data protection and privacy laws;

(e) **Non-Infringement.** To Company's knowledge, the Platform does not infringe upon the Intellectual Property Rights of any third party;

(f) **Personnel.** Company personnel providing services under this Agreement shall possess the qualifications, skills, and experience reasonably necessary to perform such services in a professional and workmanlike manner.

7.2 Institution Warranties. Institution represents and warrants that:

(a) **Authority.** Institution has the full right, power, and authority to enter into this Agreement;

(b) **Accreditation.** Institution is an accredited educational institution in good standing;

(c) **Educational Use.** Institution shall use the Platform solely for educational purposes as described herein and shall not permit the entry of real PHI;

(d) **Authorized Users.** Institution shall ensure that all Authorized Users comply with the terms and conditions of this Agreement and the Platform's Acceptable Use Policy;

(e) **Compliance.** Institution shall comply with all laws and regulations applicable to its use of the Platform, including FERPA and applicable state student privacy laws.

7.3 Warranty Remedy. If the Platform fails to perform materially in accordance with the Documentation during the Subscription Term, Company shall, at its sole expense, use commercially reasonable efforts to correct such non-conformance within thirty (30) days of receiving written notice from Institution describing the non-conformance in reasonable detail. If Company fails to cure such non-conformance within such thirty (30) day period, Institution may, as its sole and exclusive remedy, terminate this Agreement and receive a pro-rata refund of prepaid fees for the unused portion of the then-current Subscription Year.

7.4 Disclaimer of Warranties. EXCEPT FOR THE EXPRESS WARRANTIES SET FORTH IN SECTIONS 7.1 AND 7.2:

(a) THE PLATFORM IS PROVIDED "AS IS" AND "AS AVAILABLE";

(b) COMPANY MAKES NO WARRANTIES OF ANY KIND, WHETHER EXPRESS, IMPLIED, STATUTORY, OR OTHERWISE, INCLUDING BUT NOT LIMITED TO IMPLIED WARRANTIES OF MERCHANTABILITY, FITNESS FOR A PARTICULAR PURPOSE, TITLE, AND NON-INFRINGEMENT;

(c) COMPANY DOES NOT WARRANT THAT THE PLATFORM WILL BE UNINTERRUPTED, ERROR-FREE, OR COMPLETELY SECURE;

(d) COMPANY DOES NOT WARRANT THAT THE PLATFORM IS SUITABLE FOR USE IN CONNECTION WITH ACTUAL MEDICAL PRACTICE, CLINICAL DECISION-MAKING, OR ANY PURPOSE OTHER THAN EDUCATIONAL SIMULATION AND TRAINING;

(e) COMPANY EXPRESSLY DISCLAIMS ANY WARRANTY THAT THE PLATFORM CONSTITUTES MEDICAL ADVICE, CLINICAL GUIDANCE, OR A MEDICAL DEVICE.

ARTICLE 8 — TERM AND TERMINATION

8.1 Initial Term. This Agreement shall commence on the Effective Date and continue for the period specified in Exhibit B (the "Initial Term"), which shall be no less than twelve (12) months unless otherwise agreed in writing, unless earlier terminated in accordance with this Article 8.

8.2 Renewal. This Agreement shall automatically renew for successive one (1) year periods (each a "Renewal Term") unless either Party provides written notice of non-renewal at least sixty (60) days prior to the expiration of the then-current term. Renewal is subject to payment of the applicable Annual Subscription Fee for the Renewal Term.

Notice of Automatic Renewal (California Business and Professions Code § 17600 et seq.): This Agreement renews automatically as described above. To cancel, Institution must provide written notice of non-renewal to contact@telemedcore.com or by mail to Telemedcore, 2108 N ST STE N, Sacramento, CA 95816, at least sixty (60) days before the end of the then-current term. Upon timely cancellation notice, access will remain available through the end of the paid term with no additional charge.

8.3 Termination for Cause. Either Party may terminate this Agreement immediately upon written notice if:

(a) The other Party commits a material breach of this Agreement and fails to cure such breach within thirty (30) days after receiving written notice specifying the breach in reasonable detail;

(b) The other Party becomes insolvent, makes an assignment for the benefit of creditors, files or has filed against it a petition in bankruptcy, or has a receiver or trustee appointed for substantially all of its assets;

(c) The other Party ceases to conduct business in the normal course.

8.4 Termination for Convenience. Either Party may terminate this Agreement for any reason upon ninety (90) days' prior written notice to the other Party. If Institution terminates for convenience during a Subscription Year, no refund of prepaid fees shall be due for the remainder of that Subscription Year. If Company terminates for convenience, Company shall refund to Institution a pro-rata portion of prepaid fees for the unused remainder of the then-current Subscription Year.

8.5 Effect of Termination.

(a) **Access Cessation.** Upon the effective date of termination or expiration, all licenses granted hereunder shall immediately terminate, and Institution's and all Authorized Users' access to the Platform shall cease.

(b) **Data Export.** Upon Institution's written request submitted prior to the effective date of termination or expiration, Company shall make Educational Data available for export in PDF format within fifteen (15) business days of such request (the "Export Period"). Data export requests submitted after the effective date of termination will be subject to Company's then-current data extraction fee schedule. Company does not guarantee export in machine-readable, structured, or interoperable formats. After the Export Period (or, if no export is requested, after the effective date of termination), Company shall delete all Educational Data from its systems within ninety (90) days and, upon Institution's written request, provide written certification of deletion.

(c) **Survival.** The following provisions shall survive termination or expiration of this Agreement: Article 1 (Definitions), Section 2.4 (Reservation of Rights), Article 3 (Fees and Payment, with respect to amounts accrued prior to termination), Section 5.1 (Educational Data Ownership), Section 5.6 (Data Breach Notification), Article 6 (Intellectual Property), Section 7.4 (Disclaimer of Warranties), Article 9

(Limitation of Liability), Article 10 (Indemnification), Article 11 (Confidentiality), and Article 13 (General Provisions).

(d) **Accrued Rights.** Termination or expiration shall not affect any rights, obligations, or liabilities of either Party that have accrued prior to the date of termination.

ARTICLE 9 — LIMITATION OF LIABILITY

9.1 Exclusion of Consequential Damages. TO THE MAXIMUM EXTENT PERMITTED BY APPLICABLE LAW, IN NO EVENT SHALL EITHER PARTY BE LIABLE TO THE OTHER PARTY FOR ANY INDIRECT, INCIDENTAL, SPECIAL, CONSEQUENTIAL, EXEMPLARY, OR PUNITIVE DAMAGES, INCLUDING BUT NOT LIMITED TO DAMAGES FOR LOSS OF PROFITS, REVENUE, GOODWILL, DATA, OR USE, REGARDLESS OF THE THEORY OF LIABILITY (CONTRACT, TORT, STRICT LIABILITY, OR OTHERWISE) AND EVEN IF SUCH PARTY HAS BEEN ADVISED OF THE POSSIBILITY OF SUCH DAMAGES.

9.2 Cap on Liability. EXCEPT FOR (A) A PARTY'S INDEMNIFICATION OBLIGATIONS UNDER ARTICLE 10, (B) COMPANY'S OBLIGATIONS UNDER SECTION 5.6 (DATA BREACH NOTIFICATION), AND (C) EITHER PARTY'S LIABILITY FOR GROSS NEGLIGENCE OR WILLFUL MISCONDUCT, EACH PARTY'S TOTAL AGGREGATE LIABILITY ARISING OUT OF OR RELATED TO THIS AGREEMENT SHALL NOT EXCEED THE TOTAL AMOUNT OF FEES ACTUALLY PAID OR PAYABLE BY INSTITUTION TO COMPANY DURING THE TWELVE (12) MONTH PERIOD IMMEDIATELY PRECEDING THE EVENT GIVING RISE TO THE CLAIM.

9.3 Essential Purpose. THE PARTIES ACKNOWLEDGE THAT THE LIMITATIONS SET FORTH IN THIS ARTICLE 9 ARE AN ESSENTIAL ELEMENT OF THE BARGAIN BETWEEN THE PARTIES AND SHALL APPLY NOTWITHSTANDING THE FAILURE OF THE ESSENTIAL PURPOSE OF ANY LIMITED REMEDY.

9.4 No Medical Liability. COMPANY SHALL HAVE NO LIABILITY WHATSOEVER FOR ANY CLAIM, LOSS, OR DAMAGE ARISING FROM OR RELATED TO: (A) ANY ACTUAL CLINICAL USE OF THE PLATFORM IN CONTRAVENTION OF SECTION 2.2; (B) ANY MEDICAL DECISION MADE BY ANY PERSON BASED ON INFORMATION OBTAINED FROM OR GENERATED BY THE PLATFORM; OR (C) THE ENTRY OF REAL PATIENT DATA INTO THE PLATFORM IN VIOLATION OF THIS AGREEMENT.

ARTICLE 10 — INDEMNIFICATION

10.1 Company Indemnification. Company shall defend, indemnify, and hold harmless Institution, its trustees, officers, directors, employees, agents, and students from and against any third-party claims, actions, suits, proceedings, damages, losses, liabilities, costs, and expenses (including reasonable attorneys' fees) arising out of or related to:

(a) Any allegation that the Platform, as provided by Company and used in accordance with this Agreement, infringes or misappropriates any third-party Intellectual Property Right;

(b) Any breach by Company of its representations, warranties, or obligations under this Agreement;

(c) Any gross negligence or willful misconduct by Company or its personnel.

If the Platform becomes, or in Company's reasonable opinion is likely to become, the subject of an infringement claim, Company may, at its sole option and expense: (i) procure the right for Institution to continue using the Platform; (ii) modify the Platform to make it non-infringing; or (iii) replace the Platform with a functionally equivalent non-infringing alternative. If none of the foregoing is commercially practicable, Company may terminate this Agreement and refund to Institution a pro-rata portion of prepaid fees for the unused Subscription Year.

10.2 Institution Indemnification. Institution shall defend, indemnify, and hold harmless Company, its officers, directors, employees, and agents from and against any third-party claims, actions, suits, proceedings, damages, losses, liabilities, costs, and expenses (including reasonable attorneys' fees) arising out of or related to:

(a) Institution's or any Authorized User's use of the Platform in violation of this Agreement, including but not limited to the unauthorized entry of real PHI or actual clinical use, and specifically including: (i) any and all penalties, fines, civil monetary assessments, or corrective action plans imposed by the U.S. Department of Health and Human Services Office for Civil Rights ("HHS/OCR") or any other federal or state regulatory body arising from or related to such violation, including penalties assessed under 42 U.S.C. § 1320d-5 and 42 U.S.C. § 1320d-6; (ii) all costs associated with breach notification required under the HIPAA Breach Notification Rule (45 C.F.R. Part 164, Subpart D) or applicable state breach notification statutes; (iii) all costs of forensic investigation, remediation, and security audit necessitated by the introduction of PHI into the Platform; and (iv) all costs of credit monitoring, identity theft protection services, or other remediation provided to individuals whose information was exposed;

(b) Any breach by Institution of its representations, warranties, or obligations under this Agreement;

(c) Any claim related to Institution's educational programs, accreditation, or student outcomes, except to the extent directly caused by a defect in the Platform;

(d) Any gross negligence or willful misconduct by Institution or its personnel.

10.3 Indemnification Procedures. The indemnified Party shall: (a) promptly notify the indemnifying Party in writing of any claim (provided that failure to provide timely notice shall not relieve the indemnifying Party of its obligations except to the extent materially prejudiced by such failure); (b) grant the indemnifying Party sole control of the defense and settlement of such claim; and (c) provide reasonable cooperation, at the indemnifying Party's expense, in the defense of such claim. The indemnified Party may participate in the defense at its own expense with counsel of its choosing.

ARTICLE 11 — CONFIDENTIALITY

11.1 Obligations. Each Party shall: (a) hold the other Party's Confidential Information in strict confidence; (b) not disclose such Confidential Information to any third party except to its employees, contractors, and advisors who have a need to know and are bound by confidentiality obligations no less restrictive than those herein; and (c) use such Confidential Information solely for the purposes of exercising its rights and performing its obligations under this Agreement.

11.2 Compelled Disclosure. If a Party is compelled by law, regulation, or legal process to disclose the other Party's Confidential Information, it shall: (a) provide prompt written notice to the other Party (to the extent legally permitted) to allow the other Party to seek a protective order or other remedy; and (b) disclose only the minimum amount of Confidential Information required.

11.3 Return or Destruction. Upon termination of this Agreement or upon written request by the disclosing Party, the receiving Party shall promptly return or destroy all Confidential Information of the disclosing Party in its possession, and provide written certification of such return or destruction, except for copies retained in automated backup systems (which shall remain subject to the confidentiality obligations herein until destroyed in the ordinary course).

11.4 Duration. The obligations under this Article 11 shall survive termination of this Agreement for a period of three (3) years, except with respect to trade secrets, for which the obligations shall continue for so long as the information qualifies as a trade secret under applicable law.

ARTICLE 12 — COMPLIANCE WITH LAWS

12.1 General Compliance. Each Party shall comply with all federal, state, and local laws, rules, and regulations applicable to its performance under this Agreement.

12.2 Anti-Corruption. Neither Party shall, in connection with this Agreement, directly or indirectly pay, offer, give, or promise to pay or give any money or anything of value to any government official, political party, candidate for public office, or any other person for the purpose of obtaining or retaining business or securing any improper advantage.

12.3 Export Controls. Institution shall not export or re-export the Platform or any component thereof in violation of U.S. export control laws and regulations.

12.4 Anti-Kickback. The Parties acknowledge that, because this Agreement is for educational use only and does not involve the referral of patients for medical services, the federal Anti-Kickback Statute (42 U.S.C. Section 1320a-7b) is not applicable. Notwithstanding the foregoing, neither Party shall engage in any conduct in connection with this Agreement that would constitute a violation of the Anti-Kickback Statute if it were applicable.

12.5 Accessibility. Company shall use commercially reasonable efforts to maintain the Platform in compliance with Web Content Accessibility Guidelines (WCAG) 2.1 Level AA and Section 508 of the Rehabilitation Act, as applicable to web-based software applications.

ARTICLE 13 — GENERAL PROVISIONS

13.1 Governing Law. This Agreement shall be governed by and construed in accordance with the laws of the State of California, without regard to its conflict of laws principles.

13.2 Dispute Resolution.

(a) **Negotiation.** The Parties shall attempt in good faith to resolve any dispute arising out of or relating to this Agreement through informal negotiation between senior executives within thirty (30) days of written notice of the dispute.

(b) **Mediation.** If the dispute is not resolved through negotiation, either Party may submit the dispute to non-binding mediation administered by the American Arbitration Association ("AAA") in accordance with its Commercial Mediation Procedures. The mediation shall take place in Sacramento, California, or by videoconference as mutually agreed.

(c) **Arbitration.** If the dispute is not resolved through mediation within sixty (60) days, the dispute shall be finally resolved by binding arbitration administered by the AAA in accordance with its Commercial Arbitration Rules. The arbitration shall be conducted by a single arbitrator in Sacramento, California, or by videoconference as mutually agreed by the Parties. The arbitrator's award shall be final and binding and may be entered as a judgment in any court of competent jurisdiction.

(d) **Injunctive Relief.** Notwithstanding the foregoing, either Party may seek injunctive or other equitable relief in any court of competent jurisdiction to prevent the actual or threatened breach of this Agreement relating to Intellectual Property Rights or Confidential Information.

13.3 Force Majeure. Neither Party shall be liable for any failure or delay in performing its obligations under this Agreement to the extent caused by circumstances beyond its reasonable control, including but not limited to acts of God, natural disasters, epidemics, pandemics, war, terrorism, riots, government actions, power failures, internet outages, or third-party service provider failures, provided that the

affected Party: (a) promptly notifies the other Party; and (b) uses commercially reasonable efforts to mitigate the effects of such event. If a force majeure event continues for more than sixty (60) days, either Party may terminate this Agreement upon written notice.

13.4 Assignment. Neither Party may assign this Agreement or any rights or obligations hereunder without the prior written consent of the other Party, except that either Party may assign this Agreement without consent in connection with a merger, acquisition, or sale of all or substantially all of its assets, provided that the assignee assumes all obligations under this Agreement. Any purported assignment in violation of this Section shall be void.

13.5 Notices. All notices under this Agreement shall be in writing and delivered by: (a) certified mail, return receipt requested; (b) nationally recognized overnight courier; or (c) email with confirmed receipt, to the addresses set forth on the signature page or as subsequently designated in writing. Notice is effective upon receipt.

13.6 Entire Agreement. This Agreement, including all Exhibits, constitutes the entire agreement between the Parties with respect to the subject matter hereof and supersedes all prior and contemporaneous agreements, proposals, negotiations, representations, and communications, whether oral or written.

13.7 Amendment. This Agreement may be amended only by a written instrument signed by authorized representatives of both Parties. No modification of this Agreement shall be effective unless in writing and signed by both Parties.

13.8 Waiver. No failure or delay by either Party in exercising any right under this Agreement shall constitute a waiver of that right. A waiver of any provision shall not be deemed a waiver of any other provision or of the same provision on any other occasion.

13.9 Severability. If any provision of this Agreement is held to be invalid, illegal, or unenforceable, the remaining provisions shall continue in full force and effect, and the Parties shall negotiate in good faith a valid, enforceable replacement provision that most closely reflects the original intent.

13.10 Independent Contractors. The relationship between the Parties is that of independent contractors. Nothing in this Agreement creates a partnership, joint venture, agency, or employment relationship.

13.11 Third-Party Beneficiaries. This Agreement is for the sole benefit of the Parties and their permitted successors and assigns. Nothing herein confers any rights upon any third party.

13.12 Counterparts. This Agreement may be executed in counterparts, each of which shall be deemed an original and all of which together shall constitute one and the same instrument. Electronic signatures shall be deemed original signatures for all purposes.

13.13 Construction. The headings in this Agreement are for convenience only and shall not affect interpretation. "Including" means "including but not limited to." References to "days" mean calendar days

unless otherwise specified. References to statutes include amendments thereto.

13.14 Government Terms. If Institution is a public educational institution, any additional terms required by applicable state procurement law are incorporated herein by reference. In the event of a conflict between such required terms and this Agreement, the required governmental terms shall control solely to the extent necessary to comply with applicable law.

The Parties acknowledge that public educational institutions in certain states may be subject to constitutional or statutory limitations on sovereign immunity, binding arbitration, and contractual indemnification obligations. To the extent any provision of this Agreement — including but not limited to the arbitration clause in Section 13.2(c) and the indemnification obligations in Article 10 — is unenforceable against Institution under applicable state law governing public entities, the Parties agree to negotiate in good faith a written addendum addressing such jurisdiction-specific requirements. The unenforceability of any single provision as applied to a public institution shall not affect the validity or enforceability of the remaining provisions of this Agreement.

SIGNATURE PAGE

IN WITNESS WHEREOF, the Parties have executed this Agreement as of the Effective Date.

LICENSOR: TELEMEDCORE	**LICENSEE: [INSTITUTION NAME]**
Signature: 	**Signature:**
Printed Name: ANIETIE TIMOTHY UDOMA	**Printed Name:**
Title: FOUNDER	**Title:**
Date (MM/DD/YYYY): 04/30/2026	**Date (MM/DD/YYYY):**
Notice Address: 2108 N ST STE N, Sacramento, CA 95816	**Notice Address:**

EXHIBIT A — ACCEPTABLE USE POLICY

Authorized Users Must:

1. Use the Platform only for educational purposes related to Eligible Programs
2. Use only Simulated Patient Data — never real patient information

3. Maintain the confidentiality of their login credentials
4. Report any suspected security incidents to Institution's designated administrator immediately
5. Comply with Institution's academic integrity policies when using the Platform

Authorized Users Must Not:

1. Enter real patient data, Protected Health Information, or personally identifiable health information of any actual individual
2. Share login credentials with any other person
3. Attempt to access data belonging to other tenants, institutions, or users
4. Use the Platform for any commercial purpose
5. Attempt to probe, scan, or test the vulnerability of the Platform without Company's written authorization
6. Use the Platform to transmit spam, malware, or offensive content
7. Use the Platform in any manner that violates applicable law or regulation

Enforcement

Violations of this Acceptable Use Policy may result in immediate suspension or termination of the violating Authorized User's access. Repeated or egregious violations by Institution's Authorized Users may constitute a material breach of the Agreement.

[End of Agreement]

Telemedcore
2108 N ST STE N, Sacramento, CA 95816
contact@telemedcore.com

ORDER FORM

ORDER DETAILS

Order Number	Order Date	Status	Governing Agreement
ORD-TMC-BUR-20260610-001	06/10/2026	Approved	EDU-SLA-TMC-BUR-001, Burbank Quote 003

LICENSEE AND TERM

Licensee	Term	Billing Contact	Invoice Terms
	Service Period: Twelve (12) months beginning on the Provisioning Date Provisioning Date: To be completed when administrative access is sent		Purchase Order (PO) Issuance Deadline: Five (5) business days from signature Payment Terms: Net 30 from invoice date [ ] Licensee explicitly waives the requirement for a PO to process invoices.

COMMERCIAL ITEMS

Item / Obligation	Quantity	Service / Delivery Period	Billing Schedule	Net Amount
Telemedcore Educational License – Annual Subscription	150	Twelve (12) months beginning on the Provisioning Date	Annual invoice issued upon signature	$52,500.00

TOTALS

Gross Subscription	Discounts / Credits	Add-Ons & Services	Taxes	Grand Total
$52,500.00	$0.00	$0.00	$5,512.50	$58,012.50

COMMERCIAL NOTES

- The Service Period begins on the Provisioning Date. Provisioning Date means the date Telemedcore first makes the tenant environment available to Licensee by sending initial administrative login credentials or otherwise confirming administrative access in writing.
- This Order Form is governed by and incorporates by reference the attached Telemedcore Educational Seat License Agreement (Edu SLA).
- Provisioning occurs within three (3) to five (5) business days after payment clears.
- If Licensee has not issued a required Purchase Order (PO) or executed the PO waiver above within five (5) business days from signature, Telemedcore may suspend invoicing and provisioning until procurement authorization is resolved.
- Subscription and Software as a Service (SaaS) add-on access are made available throughout the service period above. One-time onboarding, implementation, training, or professional services are included only when listed as a separate commercial item or attached Statement of Work (SOW).
- Discounts, rebates, Service Level Agreement (SLA) credits, refunds, cancellation credits, or other variable consideration are none except as stated in this Order Form or the Edu SLA.

AUTO-RENEWAL

THIS SUBSCRIPTION WILL AUTOMATICALLY RENEW FOR SUCCESSIVE TWELVE (12) MONTH PERIODS AT TELEMEDCORE'S THEN-CURRENT STANDARD RATE, UNLESS EITHER PARTY PROVIDES WRITTEN NOTICE OF CANCELLATION AT LEAST SIXTY (60) DAYS PRIOR TO THE EXPIRATION OF THE CURRENT SERVICE PERIOD.

SIGNATURES

Licensor: Telemedcore
Signature:

Printed Name: Anietie Timothy Udoma

Title: Telemedcore authorized representative

Date: 06/10/2026

Licensee Legal Entity Name:
Signature:

Printed Name:

State of Incorporation / Entity Type:

Title:

Date:

Burbank Unified School District
Instructional Services

REPORT TO THE BOARD

TO:	Members of the Board of Education
FROM:	Peter Knapik, Assistant Superintendent of Educational Services
PREPARED BY:	Juan Noguera, Director of Adult Education
SUBMITTED BY:	Laura Erisman, Administrative Secretary
DATE:	June 25, 2026
SUBJECT:	Approval of Agreement between Burbank Adult School and iHeartMEDIA

Background

With the advent of the adult education consortium structure and the requirements for reporting data, BAS is in a competitive process for the distribution of funding with the other five members of the Los Angeles Regional Adult Education Consortium (LARAEC). The basic data components are enrollment in the program areas, and completion of high school diplomas/equivalents and CTE program certificates. Burbank Adult School (BAS) produces a school catalog that mailed out three times a year to over 69,000 homes to promote its classes and programs.

Discussion/Issues

iHeartMEDIA provides Burbank Adult School with services to market its educational programs and recruit potential students through the use of iHeartMEDIA marketing campaign to involve Location-Based Behavioral, Location-Based Retargeting, Behavioral Targeting, Marketplace Targeting, Keyword Targeting, Retargeting., iHeart Radio Streaming and Real 92.3 FM Endorsement spots. The marketing campaign inform, motivate and encourage potential students to visit BAS, register for classes or programs and attend information/orientation sessions. The focus areas for promotion include the CTE programs and the high school diploma, equivalency and ESL programs. The goal is to maximize enrollment for all non-CTE and CTE programs. The outcomes will be tracked through enrollment, attendance, and program completers.

Fiscal Implications

The estimated cost for the services for the period covering July 29, 2026 through May 31, 2027, is $35,200, which will be paid with California Adult Education Program (CAEP) funds and Burbank Adult School general funds.

Recommendations

Peter Knapik, Assistant Superintendent of Educational Services, recommends that the Board of Education approve the agreement between the Burbank Unified School District, Burbank Adult School and iHeartMedia to be effective from July 29, 2026 through May 31, 2027, not to exceed $35,200. (23% each = 11.0-63910.0-41101-27000-5850-5330000, 11.0-63910.0-41102-27000-5850-5330000, 11.0-63910.0-41104-27000-5850-5330000, 11.0-63910.0-41106-27000-5850-5330000 and 8% = 11.0-00639.0-41100-27000-5850-5330000) and that the authority to sign the Agreement be exercised pursuant to BUSD – AR 3314, as presented.

3400 W. Olive Avenue, Suite 550, Burbank, CA 91505

Marketing Partnership Agreement

We look forward to partnering with Burbank Adult School. Per our discussions, we are offering the following agreement commencing on July 29, 2026, and terminating on May 31, 2027.

CAMPAIGN DELIVERABLES:

PROVIDE TARGETED MARKETING TO MAXIMIZE ENROLLMENT IN NON-CTE PROGRAMS INCLUDING, BUT NOT LIMITED TO: LOCATION-BASED BEHAVIORAL, LOCATION-BASED RETARGETING, BEHAVIORAL TARGETING, MARKETPLACE TARGETING, KEYWORD TARGETING, RETARGETING AND REAL 92.3 FM SPOTS

- **Fall Semester 2026 - $12,000 net**
- **Spring Semester 2027 - $12,000 net**
- **College & Career Fair 2027 - $5,200 net**
- **Summer Semester 2027 - $6,000 net**

TOTAL NET FINANCIAL COMMITMENT: $35,200

PAYMENT TERMS:

- Advertiser agrees to pay in advance for the distribution of advertising covered by this contract.
- If iHeart has extended credit, invoices will be provided monthly. Payment from advertiser is due within 30 days of invoice.
- If Advertiser is past due in payment of any amount, iHeart may change the terms of payment for further transmissions by giving Advertiser written notice. If iHeart refers this contract for collection, Advertiser shall pay reasonable attorney's or collector's fees and any court costs incurred by iHeart

Copy:

- All copy is subject to approval from iHeartMedia.

TERMINATION AND BREACH:

- Upon signature of this agreement the campaign, the financial commitment is non-cancelable.
- Any agreed-upon modifications to the media campaign must be in writing and match the original monthly investment commitment.
- Burbank Adult School is 100% responsible for payment for "reserved" inventory.

We agree to the proposed campaign contained herein and the terms of payment:

IHEARTMEDIA

_____

Ryan Lieberman - Vice President, Sales DATE
iHeartMedia - Los Angeles

BURBANK ADULT SCHOOL

_____

Dr. Peter Knapik, Assistant Superintendent DATE
Burbank Unified School District

The Plan

Fall Semester	7/29/2026 – 8/16/2026		$12,000 net
Broadcast	**Station:** Real 92.3 (KRRL-FM) 137x total mentions 55x :30-second mentions, 82x :15-second mentions	613,800	Impressions
Display	**Tactic:** Location based geofencing display Targeting consumers within a 10-mile radius	307,692	Impressions
Display	**Tactic:** Search based geofencing display Targeting key audiences within a 10-mile radius	307,692	Impressions

Spring Semester	11/25/2026 – 1/10/2027		$12,000 net
Broadcast	**Station:** Real 92.3 (KRRL-FM) 144x total mentions 66x :30-second mentions, 78x :15-second mentions	642,100	Impressions
Display	**Tactic:** Location based geofencing display Targeting consumers within a 10-mile radius	320,000	Impressions
Display	**Tactic:** Audience based display targeting key audiences in specified zip codes	320,000	Impressions

TIMING

Fall

Spring

College & Career Fair

Summer

BURBANK UNIFIED SCHOOL DISTRICT

Due to high inventory demand and fluctuating availability, all rates quoted in this proposal are valid for 14 days from the date of issue. Pricing and availability are subject to change beyond this period.

The Plan

College & Career Fair	4/3/2027 – 4/7/2027		$5,200 net
Broadcast	**Station:** Real 92.3 (KRRL-FM) 93x :15-second mentions	743,400	Impressions
Summer Semester	4/22/2027 – 5/22/2027		$6,000 net
Broadcast	**Station:** Real 92.3 (KRRL-FM) 85x total mentions 36x :30-second mentions, 49x :15-second mentions	255,400	Impressions
Display	**Tactic:** Audience based display targeting key audiences in specified zip codes	320,000	Impressions

TIMING

Fall

Spring

College & Career Fair

Summer

TOTAL NET INVESTMENT

$35,200

BURBANK UNIFIED SCHOOL DISTRICT

Due to high inventory demand and fluctuating availability, all rates quoted in this proposal are valid for 14 days from the date of issue. Pricing and availability are subject to change beyond this period.

Burbank Unified School District
Technology Services

REPORT TO THE BOARD

TO:	Members of the Board of Education
FROM:	Jason Hasty, Assistant Superintendent of Business Services
PREPARED BY:	Lourdes Moya, Administrative Secretary I
SUBMITTED BY:	Lourdes Moya, Administrative Secretary I
DATE:	June 25, 2026
SUBJECT:	Approval of School Site and Department Software Licenses and Memberships for 2026 - 2027

Background:
The use of technology is growing and expanding daily. Software applications are not only being used by our departments on behalf of the District, but also in our classrooms. The cost can range anywhere from .99 cents to thousands of dollars. The use is increasing as we move into advanced methods of supporting our teachers and students in various areas of instruction. All software purchases are required to have Board approval on an annual basis, which is being strictly enforced by Los Angeles County of Education (LACOE).

Discussion/Issues:
At the same time we continue to grow the number of annual memberships for web-based services and software licenses, LACOE is requesting that all districts using software submit Board approval (not purchase orders) for all software licensing purchases. This requirement has been in place but was not enforced until July 1, 2014.

District-wide application purchases are already submitted to the Board of Education each time we enter into a contract or when they are renewed. This request is intended to cover those smaller software applications used by individual teachers and students at our school sites. It's unrealistic to have each campus request Board approval for every software license purchase. Therefore, we have created a master list of software licenses and web-based memberships that were purchased last fiscal year for approval in this fiscal year. This list will be brought before the Board of Education for approval annually.

Fiscal Impact:
The funding sources will vary. However, these applications are being funded through site or department discretionary dollars, categorical funding or gifts and donations.

Recommendation:
Jason Hasty, Assistant Superintendent of Business Services, recommends that the Board of Education approve the District Software Licenses and Memberships for the 2026-2027 school year, as presented.

VENDOR	*LICENSE NAME*	*ESTIMATED COST 2026-27*	*FUNDING SOURCE/SITE*		
1Password	1Password Business	$1,250.00	Technology		
ABCya.com	Classroom Subscription	$900.00	McKinley		
ABCya.com	Classroom Subscription	$500.00	Stevenson		
Administrative Software Applications	ASAP (Vanco)	$15,000.00	BAS		
Aeries Software	Aeries ASP	$90,500.00	Instruction		
American Registry for Internet Numbers (ARIN)	Annual Maintenance	$275.00	Technology		
American Technology Solutions Corp (ATS)	1095-C Software	$5,050.00	Human Resources		
Amplified It LLC	GoGuardian	$1,700.00	Instruction		
Amplified It LLC	Google Workspace for Education	$48,500.00	Instruction		
Amplified It LLC	Google Suite	$36,500.00	Instruction (Districtwide)/COVID		
Amplify	Desmos Math Student License	$17,000.00	Muir		
Amplify	mClass	$55,000.00	Instruction		
Amplify Education	mClass D8	$55,000.00	Jefferson		
Amplify Education	mClass D8	$55,000.00	Stevenson		
AMS.NET / MGT	AVA Aware License	$3,150.00	BAS		
AMS.NET / MGT	Veeam and Wasabi Solution	$20,600.00	Technology		
AMS.NET / MGT	IBM Storage Backup System	$56,000.00	Technology		
Apex Learning	Digital Curriculum	$99,000.00	Instruction/ELO		
Apple	Slideshow Movie Maker	$50.00	Edison		
Arey Jones Educational Solutions	Lightspeed Content Filtering/Classroom Management	$30,500.00	Technology		
Arey Jones	Lightspeed Alert	$30,500.00	Technology/Business Office		
Arey Jones	Chrome Education License	$3,000.00	Muir		
Ascend Smarter Innovation	Ascend Smarter Innovation	$240.00	Luther		
Ascend Smarter Intervention	5CCL Activity Library	$250.00	Luther		
Aztec	GED & HISET Prep Series	$18,000.00	BAS		
Aztec	Pharmacy Technician Training	$30,000.00	BAS		
Battle of the Books	Battle of the Books	$60.00	Emerson		
Bidding Owl	Software	$500.00	Stevenson		
Biddle Consulting Group Inc	Opac Plus & Testgenius	$3,200.00	HR		
Bitly Europe GMBH	Bitly Europe GMBH	$120.00	Student Services		

VENDOR	*LICENSE NAME*	*ESTIMATED COST 2026-27*	*FUNDING SOURCE/SITE*		
Blooket	Blooket Plus	$60.00	Luther		
Blooket	Blooket Plus: Friends Plan	$100.00	Luther		
Blooket	Blooket Plus	$60.00	Emerson		
Blooket	Blooket Plus	$60.00	BHS		
Bluebeam	Bluebeam	$520.00	Bond		
Boom Learning	Boom Cards	$60.00	BHS		
Breakout EDU	Breakout EDU Digital +	$150.00	McKinley		
Brainpop	Brainpop ELL	$250.00	Edison		
Brainpop	School Combo 24/7	$3,050.00	Luther		
Brainpop	School Combo Subscription	$3,900.00	Harte		
Brainpop	Brainpop Jr teacher access	$3,900.00	McKinley		
Brainpop	School BP 24/7	$3,100.00	Huerta		
Brainpop	School Combo Subscription	$3,900.00	Stevenson		
Burlington English	Burlington English Annual Seat	$96,000.00	BAS		
Calendly LLC	Counselor Professional Yearly Appointment System	$300.00	BHS		
California Financial Services	Keyanalytics	$60,000.00	Business Office		
California School Boards Association (CSBA)	Gamut Policy & Gamut Policy Plus	$9,700.00	Board of Education		
CANVA	CANVA	$15.00	Huerta		
CANVA	CANVA Individual Software	$120.00	Luther		
Canvas	(SCOE)	$2,000.00	BAS		
Carahsoft/SolarWinds	Remote Support Software & Maintenance	$140.00	Food Services		
Carahsoft/SolarWinds	Remote Support Software & Maintenance	$2,500.00	Technology		
Centegix	Catapultems	$1,500.00	Roosevelt		
CentralReach Holdings	CR Lifted EDU/Custom Fidelity Package	$9,000.00	Special Ed		
CDW Amplified	Google Workspace for Education	$49,000.00	Instruction		
CDW-G	Little SIS for Google Classroom	$1,900.00	Instruction		
CharacterStrong	MS SEL and Character Development	$1,000.00	Luther		
CLI Solutions	CI Badge ASAP	$400.00	BAS		
Committee for Children	SS Gr El-5 Media	$3,000.00	Student Servicecs/LCFF		
Committee for Children	Second Step site license, multi-year	$9,000.00	Muir		
Committee for Children	TBD	$6,000.00	Luther		
Committee for Children	Second Step Elementary & Second Step Middle School	$90,000.00	Instructional Services		
CompTIA	CompTIA	$4,000.00	BAS		
CISCO	CISCO Digital Network Architecture Essentials - (Term 3 yrs)	$530.00	BAS		
Curriculum Associates	I-Ready Math and Reading Site License	$15,300.00	Providencia		
Creative Engine	Creative Engine - Samsung Electronics America	$350.00	Emerson		

VENDOR	*LICENSE NAME*	*ESTIMATED COST 2026-27*	*FUNDING SOURCE/SITE*		
Customguide	Starter Annual	$2,500.00	BAS		
Cut Time LLC	CutTime Next Gen	$1,800.00	Instruction/Film LA		
Cyber High	Credit Recovery License Agreement	$38,500.00	Special Ed/Various		
Cybersoft Technologies	PrimeroEdge	$39,500.00	Food Services		
Dassault Sytems	3D Experience Solidworks for Makers	$240.00	Disney		
Diffit	Diffit School License	$4,600.00	Muir		
Diffit	Diffit Site License	$1,700.00	Luther		
Digicert/DNS Made Easy	TBD	$1,500.00	Technology		
Digital Scepter Corp	Falco	$24,000.00	Technology		
Digital Scepter Corp	Palo Alto	$22,000.00	Technology		
Digital Scepter Corp	Next Generation Firewall	$256,190.92	Technology		
DMARCLY (Netflare Inc.)	Email Security, Authentication	$500.00	Technology		
DNS Made Easy	DNS	$100.00	Technology		
Document Tracking Services	DTS	$9,500.00	Instruction/CAASPP		
Docusign	Standard Plan	$350.00	Special Ed/Workability Program		
Dorian Business Systems	Charms Account	$2,000.00	Instruction/Film LA		
Dreambox	Reading Plus	$7,250.00	Muir		
Droplet	Droplet	$6,500.00	Fiscal Services		
Ed Club	Typing Club License	$1,900.00	McKinley		
Edmentum	Ed Options Academy Standard	$8,000.00	Instruction		
Edmentum	Pilot Program	$7,000.00	BAS		
Edmentum, Inc.	Coursewear	$3,200.00	BAS		
Edmentum	Apex Learning Tutorials	$86,000.00	BAS		
Edmentum	Apex Learning Tutorials	$30,000.00	Monterey		
Edpuzzle, Inc.	Pro School Site License	$3,000.00	Luther		
Edpuzzle, Inc.	Pro School Site License/Pro Teacher	$3,000.00	Monterey		
Electude	Automotive Essentials	$3,000.00	K-12 LAVC/Instruction (JBHS)		
ELT Buzz	ELT Buzz 1 Year Teacher Subscription	$30.00	Luther		
EMS-LINQ	Website Hosting - School Nutrition and Fitness (Isite)	$1,300.00	Food Services		
Epicor Software Corp	DocStar	$4,000.00	HR		
ESGI	ESGI 12-Month License	$500.00	Stevenson		
Essential Education	Spanish GED	$12,000.00	BAS		
Everway	Read & Write	$110,000.00	Special Ed		
Everyday Speech	Complete Guided Therapy	$8,000.00	Special Ed		
ExploreLearning LLC	School Gizmos Science Department License	$4,700.00	Luther		
ExploreLearning LLC	Reflex, Gizmos, Science Dept	$6,500.00	Muir		

VENDOR	*LICENSE NAME*	*ESTIMATED COST 2026-27*	*FUNDING SOURCE/SITE*		
Finalsite	Blackboard / CMS Platform	$ 40,000.00	Technology		
Flocabulary	Flocabulary Lite Access Plan	$140.00	Stevenson		
Follet School Solutions	Follet Library Licenses	$20,350.00	Instruction		
Form Approvals	G Suite Individual Subscription	$100.00	BHS		
Form Approvals	Automated Approval Workflows/Google Forms	$100.00	Technology		
Form Approvals	G Suite Approval Workflow	$200.00	Fiscal Services		
Formative	Software	$200.00	BHS		
Freckle	TBD	$3,500.00	Stevenson		
Freshworks Inc	Freshservice & Freshcaller	$23,000.00	Technology		
Freshworks Inc	Business Agents	$24,000.00	Facilities		
Frontline Technologies (CRS)	Absence & Substitute Management	$33,500.00	HR/Districtwide		
Game Salad	Student Licenses	$1,000.00	Instruction/Perkins/JBHS		
Get Movin'	Get Movin'	$500.00	Emerson		
Gimkit.com	Gimkit Pro	$200.00	Luther		
Gizmos	TBD	$3,525.00	Dolores Huerta		
GoDaddy.com	Domain Name Renewal	$175.00	JBHS		
GoDaddy.com	Domain Name Renewal	$1,700.00	Technology		
GoNoodle Plus	GoNoodle Plus	$1,500.00	Roosevelt		
Granicus Inc	Media Manager/Peak Agenda; Encoder	$36,500.00	Districtwide/Superintendent		
Gray Step Software	ASBWorks	$6,000.00	BHS, JBHS, Huerta, Luther, Muir		
Houghton Mifflin	English 3D with Writable	$8,000.00	BHS		
Illuminate Education	Assessment Software and Item Bank (School City)	$115,000.00	Instruction/COVID		
Imagine Learning	Imagine Language & Literacy Annual Student License	$18,000.00	Instruction/Elementaries		
Imagine Learning	Imagine Language & Literacy Annual Student License	$4,500.00	Intruction/McKinley		
Imagine Learning	Imagine Language & Literacy Annual Student License	$1,100.00	Instruction/Jefferson		
Imagine Learning	Imagine Language & Literacy Annual Student License	$7,100.00	Instruction/Emerson		
Imagine Learning	Imagine Language & Literacy Annual Student License	$3,500.00	Instruction/Jefferson		
Instructure (Parchment)	Parchment Sender Services	$18,500.00	BHS/JBHS		
Interstellar/Arete Labs	Class Match	$150.00	Harte		
Interstellar/Arete Labs	Class Match	$150.00	McKinley		
IsDown	Status Page	$1,900.00	Technology		
IXL Learning	Enrichment Resources Math	$14,500.00	Dolores Huerta		
IXL Learning	Enrichment Resource English	$6,000.00	Dolores Huerta		
IXL Learning	IXL Site License	$700.00	Dolores Huerta		
IXL Learning	Math Site License	$800.00	Instruction-STEM/BCDS		
IXL Learning	Site License	$8,100.00	McKinley		
IXL Learning	IXL Site License IXL Foundations I & II	$2,500.00	Sp Ed/BHS		
IXL Learning	Math Site License	$21,500.00	Luther		
JAMF Software	JAMF Pro Casper Suite	$30,000.00	Technology		

VENDOR	*LICENSE NAME*	*ESTIMATED COST 2026-27*	*FUNDING SOURCE/SITE*		
Jolly Phonics	TBD	$600.00	Washington		
Kahoot!	Kahoot! EDU Licenses	$2,800.00	Luther		
Kahoot!	Kahoot! + Gold	$150.00	Muir		
KAMI	KAMI Teacher Plan	$100.00	JBHS		
KAMI	KAMI Teacher Plan	$100.00	Mag Park		
KAMI	KAMI Teacher Plan	$200.00	Edison		
KAMI	KAMI Teacher Plan	$100.00	Muir		
Kuta Software	Math Site License	$1,350.00	BHS		
Learning A-Z	Reading A-Z; RAZ-Kids	$500.00	Disney		
Learning A-Z	RAZ-Plus	$3,000.00	Stevenson		
Lesson Pix	Licenses	$325.00	Special Ed		
Librarything.com	Tiny Cat	$250.00	Miller		
Linguistics Inc.	Pace AI	$60,000.00	BAS		
Literary Minnesota	Northstar	$1,000.00	BAS		
Luma Booth	Luma Booth / dslr Booth	$2,000.00	Stevenson		
Mail Chimp	Software	$1,000.00	Stevenson		
Marsh Media	Just Around the Corner	$800.00	Instruction		
Minga Solutions	Minga Hall Pass	$11,000.00	Instruction		
Mitchell 1	Prodemand	$1,100.00	Facilities		
Moby Max	MobyMax All Student License	$9,500.00	Special Ed		
Mote Technologies, Inc.	Mote Unlimited	$60.00	BHS		
Mote Technologies, Inc.	Mote Unlimited	$25.00	JBHS		
Movavi Software Inc.	Movavi Software	$40.00	Jefferson		
Music Play	Music Play / Themed and Variations Inc.	$200.00	Edison		
Mystery Science Inc.	School Membership	$1,000.00	Edison		
Mystery Science Inc.	School Membership	$2,000.00	Stevenson		
N2Y	News 2 You, Symbolstix, L3 Skills	$23,500.00	Special Ed		
N2Y	Unique Learning System	$32,600.00	Special Ed		
N2Y	Polaris	$7,700.00	Special Ed		
National Health Carreer	Billing and Coding (CBCS) Pathway	$13,000.00	BAS		
Nearpod	Flocabulary Site License	$3,000.00	Disney		
Nearpod	Nearpod Site License	$5,500.00	Huerta		
Nearpod	Nearpod Gold License	$100.00	JBHS		
Nearpod	Flocabulary Site License	$3,000.00	Muir		
Nearpod	Nearpod Site License	$5,000.00	Muir		
Nearpod	Flocabulary Site License	$150.00	Stevenson		
New Readers Press	Engen	$3,750.00	BAS		
Newsela	Newsela Licenses	$5,000.00	McKinley		
Noredink Corp.	NoRedInk Premium Site License	$5,500.00	Muir		

VENDOR	*LICENSE NAME*	*ESTIMATED COST 2026-27*	*FUNDING SOURCE/SITE*		
NTT	Cisco Wireless Controller System Maintenance & Software	$24,200.00	Technology		
NTT	Smartnet for Network Equipment	$12,500.00	Technology		
NTT	CISCO Flex EAPL On-premises Calling	$106,000.00	Technology		
NTT	Informacast Notification Maintenance (Singlewire)	$15,000.00	Technology		
Parchment	Parchment Sender Services	$12,750.00	BHS/JBHS		
Pear Deck	Building-Wide Premium Service	$3,150.00; $150	Luther		
Pear Deck	Pear Deck Premium	$250.00	Muir		
Pearson Assessment	License subscription	$50.00	Special Ed		
Pitsco Education	Expeditions/Microburst Learning Student License	$4,600.00	Instruction/Perkins/Luther		
Pitsco Education	D X-Plane	$100.00	Instruction/STSEM/Luther		
Planetbids	Planetbids	$40,050.00	Purchasing		
Podbean	Podbean	$125.00	JBHS		
Project Lead The Way	Computer Science for Innovators and Makers	$2,500.00	Instruction/Perkins/Muir		
Project Read	Professional - Decodable Generator	$200.00	Edison		
Project Wayfinder	Wayfinder Care Curriculum	$2,500.00	Muir		
Quizzizz.com	Quizzizz Individual Plan	$200.00	Luther		
Quizzizz.com	Quizzizz Individual Plan	$150.00	Huerta		
Raptor Technologies	Visitor Mngmnt Access Fee	$13,125.00	HR		
Raptor Technologies	Raptor Emergency Management Full Suite (4 Modules)	$65,200.00	HR		
Read Naturally Inc	Read Naturally Live	$3,000.00	Special Ed		
Read Naturally Inc	Read Naturally Live	$100.00	Washington		
Readtheory Education Svc	Pro Plan	$200.00	BAS		
Red River Press	ELLII	$15,000.00	BAS		
Register.com	Domain Name Renewal	$400.00	Technology		
Renaissance Learning	Accelerated Reader/STAR	$6,500.00	Disney		
Renaissance Learning	Data Integration Maintenance Fee	$3,125.00	Instruction/Title I		
Renaissance Learning	Accelerated Reader/STAR	$6,000.00	Edison		
Renaissance Learning	Accelerated Reader/STAR & Math	$9,200.00	Jefferson		
Renaissance Learning	Accelerated Reader/STAR - Lalilo, Freckle	$10,500.00	McKinley		
Renaissance Learning	Accelerated Reader/STAR	$6,300.00	Providencia		
Renaissance Learning	Accelerated Reader/STAR - Lalilo, Freckle, Star Math, Literacy	$6,000.00	Stevenson		
Renaissance Learning	Accelerated Reader/STAR	$6,000.00	Washington		
Renaissance/Freckle	TBD	$3,000.00	Disney		
Revision History	Revision History	$35.00	BHS		
Rundown Creator	Rundown Creator	$660.00	JBHS		
S/P2	Construction/Automotive	$2,500.00	Instruction/CTE		
Samsung Electronics	Creatve Engine	$350.00	Emerson		
Schooldude	Work Order System	$30,500.00	Facilities		

VENDOR	*LICENSE NAME*	*ESTIMATED COST 2026-27*	*FUNDING SOURCE/SITE*		
Screencastify	District License	$17,000.00	Instruction		
Screencastify	Screencastify	$15.00	Huerta		
Securitech	Continental CA4K	$3,450.00	Technology		
SHI International	Adobe Creative Cloud	$45,000.00	BAS		
SHI International	Adobe Creative Suite	$55,000.00	Instruction (Districtwide)/K-12		
SHI International	Adobe Creative Cloud Ent	$55,000.00	Instruction (Districtwide)/K-12		
SHI International	Adobe Sign-Enterprise EDU T3	$11,000.00	Business Office		
SLP Toolkit Yearly	SLP Toolkit Yearly	$215.00	Special Ed		
SLP Toolkit Monthly	SLP Toolkit Monthly	$75.00	Special Ed		
Slack	Business Annual Plan	$700.00	Technology		
Smartetools	Smartefinance	$64,000.00	Business Office		
Smore	Educator Pro	$200.00	Disney		
Smore	Educator Pro	$200.00	Jefferson		
Smore	Educator Pro	$200.00	McKinley		
Smore	Educator Pro	$200.00	BHS		
Softchoice Corp	PRTG Network Monitor	$9,000.00	Technology		
Softchoice Corp	Microsoft Licensing	$130,000.00	Technology		
Softchoice Corp	Sophos	$65,000.00	Technology		
Softchoice Corp	Microsoft 365 CoPilot EDU/Vizioplan2 EDU	$300.00	Technology		
Soundboard Studio	Soundboardstudio.com	$10.00	Edison		
Soundboard Studio	Soundboardstudio.com	$60.00	Stevenson		
Spotify USA	Spotify Premium with Hulu, multiple	$225.00	JBHS		
Stardock	Fences	$10.00	Fiscal Services		
Starfall	Starfall Education Schoolwide Subscription	$375.00	Edison		
Starfall	Starfall Education Schoolwide Subscription	$375.00	Miller		
Student Televison Network	Student Television Network	$125.00	JBHS		
Survey Monkey	Advantage Annual Plan	$400.00	Luther		
Telemedcore	Telemedcore	$60,000.00	BAS		
Texthelp Inc	Equatio	$700.00	Special Ed		
The Pocket Lab	Notebook Pro Subscription	$300.00	Dolores Huerta		
The STEM Academy	STEM 101 Intro to English	$4,000.00	Instruction/CTEIG		
The Zones of Regulation	Digital Curriculum	$250.00	Jefferson		
Tools To Grow	Subscription	$225.00	Special Ed		
Tools To Grow	Full Premium Individual	$600.00	Special Ed		
Tools4Ever	User Management & Password Reset/NIM	$ 22,000.00	Technology		
Tools4Ever	Onboarding Module	$ 1,000.00	Technology		
Toon Boom	Toon Boom	$32,500.00	Instruction (High Schools)/K12		
Total Aptitude	Annual Mobile App Hosting	$1,000.00	Dolores Huerta		
Total Aptitude	Annual Mobile App Hosting	$1,000.00	JBHS		

VENDOR	*LICENSE NAME*	*ESTIMATED COST 2026-27*	*FUNDING SOURCE/SITE*		
Total Aptitude	Annual Hosting Plan	$1,000.00	McKinley		
Total Aptitude	Annual Hosting Plan	$1,000.00	Washington		
Total Aptitude	Annual Mobile App Hosting	$1,000.00	Edison		
Total Aptitude	Annual Hosting Plan	$1,000.00	Muir		
Total Aptitude	Annual Mobile App Hosting	$1,000.00	Emerson		
Touchmath	K & GR 1 Standards Based Basic Collection	$2,800.00	Washington		
Transfrvf	VR Headsets	$20,000.00	BAS		
Typing.com	Annual License	$700.00	Muir		
Typing.com	Annual License	$60.00	BHS		
Typing Club	Typing Club (student licenses)	$1,900.00	McKinley		
Ultimateslp	UltimateSLP.com	$2,500.00	Special Ed		
WeVideo	WeVideo Educational Annual Subscription	$2,000.00	Stevenson		
Xello	Springboard	$900.00	Special Ed		
You Can Book Me	1 License	$150.00	Instruction		
You Science	Career Skills Certification	$10,000.00	Instruction/CTEIG		
Yusair	Evolo AI	$15,000.00	BAS		
Zing Apps LLC	Mobile App Service & Hosting	$1,400.00	Luther		
Zoom Video Comm	District License	$21,000.00	Instruction		
Zoom Video Comm	Zoom Room	$450.00	Tech/Board Room		
Z-Space	Annual Licenses - Secondary (2 years)	$14,000.00	CTEIG/K-12 LAVC		
Estimated total		**$3,522,700.92**			

Burbank Unified School District
Technology Services

REPORT TO THE BOARD

TO:	Members of the Board of Education
FROM:	Jason Hasty, Assistant Superintendent of Business Services
PREPARED BY:	James Avery, Director of Information Technology and Education Support
SUBMITTED BY:	Lourdes Moya, Administrative Secretary I
DATE:	June 25, 2026
SUBJECT:	Approval of Renewal of Agreement with Lumen Technologies for VoIP SIP Trunk Services, District-wide (General Fund)

Background:
The District has contracted Lumen Technologies for VoIP (Voice over Internet Protocol) SIP (Session Initiation Protocol) Trunk services for the District's telephone system since 2017. With SIP Trunking, all phone calls are transmitted over the internet, resulting in substantial cost savings, enhanced flexibility, and scalability.

Discussion/Issues:
Lumen Technologies is the District's existing telephone service provider, delivering uninterrupted connectivity and supporting the District's VoIP phone system. The current contract expires July 1, and this is a three-year contract renewal. Please see attached quote.

Fiscal Impact:
The three-year contract total is not to exceed $39,000. The annual fee is approximately $13,000 ($1,060 monthly), plus applicable taxes and any additional long-distance charges.

Recommendation:
Jason Hasty, Assistant Superintendent of Business Services, recommends that the Board of Education approve the renewal agreement between Burbank Unified School District and Lumen Technologies for VoIP SIP Trunk services, for a three-year contract, not to exceed $39,000, with an annual fee of approximately $13,000 (01.0-00000.0-00000-72000-5910-7400000) General Fund, effective July 1, 2026 through June 30, 2029, and that authority to sign the agreement be exercised pursuant to BUSD—AR 3314, as presented.

LUMEN®

Voice Rate Sheet

Deal# 11674782

Quote# 12917248

Term Plan					
Product	**Customer Name**	**Currency**	**Term**	**Rates Good Until**	**Exchange Rate Effective Date**
Voice Complete	Burbank Unified School District	USD	3 Years	7/20/2026	4/21/2026 2:07:07 PM

CCP (Concurrent Call Path)						
	CCP Plans					
Currency	**CCP Plan 1**	**CCP Plan 2**	**CCP Plan 3**	**CCP Plan 4**	**CCP Plan 5**	**Measured**
	MRC	**MRC**	**MRC**	**MRC**	**MRC**	**MRC**
USD	8.00	27.00	34.00	38.00	87.00	8.00
GBP	5.92	19.97	25.15	28.11	64.35	5.92
EUR	6.80	22.96	28.91	32.31	73.97	6.80

*Plan maximum included minutes of 5000 minutes per CCP.
□Plan 1 includes United States Local Calling
□Plan 2 includes Local and National Calling in the United States, the United Kingdom, and France
□Plan 3 includes Local and National Calling in the United States, the United Kingdom, France, and Germany
□Plan 4 includes Local and National Calling in the United States, the United Kingdom, France, Germany, and the Netherlands
□Plan 5 includes Local and National Calling in the United States, the United Kingdom, France, Germany, the Netherlands, and Belgium as well as United Kingdom Mobile: 3 Mobile, O2, EE (Orange, T-Mobile), Vodafone
□Measured: Every call is rated.

CCP (Concurrent Call Path)						
	Call Type Feature					
	Voice Order Change Charge		**Expedite Charge per ckt end (separate from LEC charges)**		**Account and Authorization Codes**	
Currency	**MRC**	**NRC**	**MRC**	**NRC**	**MRC**	**NRC**
USD		100.00		250.00	10.00	15.00
GBP		73.97		184.92	7.40	11.10
EUR		85.02		212.55	8.50	12.75

Feature Packs						
	Feature Pack 1		**Feature Pack 2**		**Mobility Feature Pack**	
Currency	**MRC**	**NRC**	**MRC**	**NRC**	**MRC**	**NRC**
USD			3.00		2.00	
GBP			2.22		1.48	
EUR			2.55		1.70	

Prepaid Minute Plan USD					
Minutes	**Prepaid Minute Plan 1**	**Prepaid Minute Plan 2**	**Prepaid Minute Plan 3**	**Prepaid Minute Plan 4**	**Prepaid Minute Plan 5**
	MRC	**MRC**	**MRC**	**MRC**	**MRC**

10,000 Prepaid Minutes	24.00	99.75	127.05	168.00	360.94
50,000 Prepaid Minutes	120.00	498.75	635.25	813.75	1804.69
100,000 Prepaid Minutes	240.00	997.50	1270.50	1627.50	3609.38
250,000 Prepaid Minutes	570.00	2418.94	3017.44	3865.31	8572.27
500,000 Prepaid Minutes	1116.00	4738.13	5907.83	7567.88	16783.60
750,000 Prepaid Minutes	1620.00	6957.56	8575.88	10985.63	24363.29
1,000,000 Prepaid Minutes	2112.00	8977.50	11179.65	14322.00	31762.50
Customized Prepaid Minutes					

Prepaid Minute Plan GBP					
Minutes	**Prepaid Minute Plan 1**	**Prepaid Minute Plan 2**	**Prepaid Minute Plan 3**	**Prepaid Minute Plan 4**	**Prepaid Minute Plan 5**
	MRC	**MRC**	**MRC**	**MRC**	**MRC**
10,000 Prepaid Minutes	17.75	73.79	93.98	124.27	266.99
50,000 Prepaid Minutes	88.76	368.93	469.89	601.93	1334.93
100,000 Prepaid Minutes	177.53	737.85	939.79	1203.86	2669.86
250,000 Prepaid Minutes	421.63	1789.29	2232.00	2859.17	6340.91
500,000 Prepaid Minutes	825.50	3504.79	4370.02	5597.96	12414.82
750,000 Prepaid Minutes	1198.31	5146.50	6343.58	8126.07	18021.52
1,000,000 Prepaid Minutes	1562.25	6640.65	8269.58	10593.98	23494.71
Customized Prepaid Minutes					

Prepaid Minute Plan EUR					
Minutes	**Prepaid Minute Plan 1**	**Prepaid Minute Plan 2**	**Prepaid Minute Plan 3**	**Prepaid Minute Plan 4**	**Prepaid Minute Plan 5**
	MRC	**MRC**	**MRC**	**MRC**	**MRC**
10,000 Prepaid Minutes	20.41	84.81	108.02	142.84	306.88
50,000 Prepaid Minutes	102.03	424.05	540.10	691.86	1534.38
100,000 Prepaid Minutes	204.05	848.09	1080.20	1383.73	3068.76
250,000 Prepaid Minutes	484.62	2056.62	2565.48	3286.35	7288.29
500,000 Prepaid Minutes	948.84	4028.44	5022.94	6434.34	14269.71
750,000 Prepaid Minutes	1377.35	5915.44	7291.36	9340.17	20714.09
1,000,000 Prepaid Minutes	1795.66	7632.83	9505.13	12176.81	27005.02
Customized Prepaid Minutes					

- Plan 1 includes United States Local Calling
- Plan 2 includes Local and National Calling in the United States, the United Kingdom, and France as well as International Calling to Canada, UK, UK-London, Italy, and Sweden
- Plan 3 includes Local and National Calling in the United States, the United Kingdom, France, and Germany as well as International Calling to Canada, UK, UK-London, Italy, Sweden, Germany, France-Paris, Ireland, Portugal, USA (Continental 48), and the Netherlands
- Plan 4 includes Local and National Calling in the United States, the United Kingdom, France, Germany, and the Netherlandsas well as International Calling to Canada, UK, UK-London, Italy, Sweden, Germany, France-Paris, Ireland, Portugal, USA (Continental 48), the Netherlands, Austria, France, USA-Puerto Rico, and Spain
- Plan 5 includes Local and National Calling in the United States, the United Kingdom, France, Germany, the Netherlands, and Belgium. UK mobile Calling: 3 Mobile, O2, EE (Orange, T-Mobile), Vodafone, as well as International Calling to Canada, UK, UK-London, Italy, Sweden, Germany, France-Paris, Ireland, Portugal, USA (Continental 48), the Netherlands, Austria, France, USA-Puerto Rico, Spain, Luxembourg, USA (Hawaii), and Belgium

National Voice Services - United States						
	MRC			**NRC**		
	USD	**GBP**	**EUR**	**USD**	**GBP**	**EUR**
Directory Listing Additional Listing	5.00	3.70	4.25	3.00	2.22	2.55
Directory Listing Caption	5.00	3.70	4.25	3.00	2.22	2.55
Directory Listing Foreign Additional Listing	12.00	8.88	10.20	3.00	2.22	2.55
Directory Listing Non Pub	3.00	2.22	2.55	3.00	2.22	2.55
Directory Listing Primary Listing						
Directory Listing Un Listed	3.00	2.22	2.55	3.00	2.22	2.55
Interstate - Per Call Surcharge Directory Assistance				1.99	1.47	1.69
Intrastate - Per Call Surcharge Directory Assistance				0.69	0.51	0.59

LD Oper Chg: Person-to-Person Per Call Surcharge				3.50	2.59	2.98
LD Oper Chg: Station-to-Station Per Call Surcharge				1.75	1.29	1.49
Telephone Number Vanity Charge				100.00	73.97	85.02
Telephone Number	0.15	0.11	0.13			
Port Charge Per Telephone Number						
Telephone Number with Teams/Lync 911	0.35	0.26	0.30	2.00	1.48	1.70

National Voice Services Outbound - United States

Rates are per minute / 6 second minimum / 6 second rounding

	Rate Per Minute			Rate Per Call			Minimum Call Charge		
	USD	GBP	EUR	USD	GBP	EUR	USD	GBP	EUR
Interstate	.0133	.0098	.0113						
Intrastate (All States)	.0133	.0098	.0113						
Local	.0133	.0098	.0113						

Toll Free/Free Phone - United States

		MRC			NRC		
		USD	GBP	EUR	USD	GBP	EUR
United States Toll Free Number	800 Number	1.50	1.11	1.28			
United States Toll Free Call Type Feature	Area Code Blocking				25.00	18.49	21.26
United States Toll Free Call Type Feature	Info Digit Blocking	10.00	7.40	8.50			
United States Toll Free Call Type Feature	Info Digit Routing	10.00	7.40	8.50			
United States Toll Free Call Type Feature	Info Digit Screening	15.00	11.10	12.75	15.00	11.10	12.75
United States Toll Free Call Type Feature	National Directory Assistance	20.00	14.79	17.00			
United States Toll Free Call Type Feature	Origin of Call Blocking	10.00	7.40	8.50			
United States Toll Free Call Type Feature	Origin of Call Routing	10.00	7.40	8.50			
United States Toll Free Call Type Feature	Payphone Surcharge (per call)				0.62	0.46	0.53
United States Toll Free Call Type Feature	Percent Allocation Routing	10.00	7.40	8.50			
United States Toll Free Call Type Feature	Time of Day Routing	10.00	7.40	8.50			
United States Toll Free Call Type Feature	Vanity Number						

Toll Free/Free Phone - United States

Rates are per minute / 6 second minimum / 6 second rounding

		Rate Per Minute		
		USD	GBP	EUR
United States Interstate	Interstate	.0252	.0186	.0214
United States Canadian Origination	United States	.0315	.0233	.0268
United States Intrastate	Alabama	.0150	.0111	.0128
United States Intrastate	Alaska	.0180	.0133	.0153
United States Intrastate	Arizona	.0150	.0111	.0128
United States Intrastate	Arkansas	.0180	.0133	.0153
United States Intrastate	California	.0270	.0200	.0230
United States Intrastate	Colorado	.0150	.0111	.0128
United States Intrastate	Connecticut	.0150	.0111	.0128
United States Intrastate	Delaware	.0150	.0111	.0128
United States Intrastate	Florida	.0150	.0111	.0128
United States Intrastate	Georgia	.0150	.0111	.0128
United States Intrastate	Hawaii	.0180	.0133	.0153
United States Intrastate	Idaho	.0180	.0133	.0153

United States Intrastate	Illinois	.0150	.0111	.0128
United States Intrastate	Indiana	.0150	.0111	.0128
United States Intrastate	Iowa	.0250	.0185	.0213
United States Intrastate	Kansas	.0180	.0133	.0153
United States Intrastate	Kentucky	.0180	.0133	.0153
United States Intrastate	Louisiana	.0150	.0111	.0128
United States Intrastate	Maine	.0180	.0133	.0153
United States Intrastate	Maryland	.0180	.0133	.0153
United States Intrastate	Massachusetts	.0150	.0111	.0128
United States Intrastate	Michigan	.0150	.0111	.0128
United States Intrastate	Minnesota	.0180	.0133	.0153
United States Intrastate	Mississippi	.0180	.0133	.0153
United States Intrastate	Missouri	.0150	.0111	.0128
United States Intrastate	Montana	.0250	.0185	.0213
United States Intrastate	Nebraska	.0180	.0133	.0153
United States Intrastate	Nevada	.0150	.0111	.0128
United States Intrastate	New Hampshire	.0180	.0133	.0153
United States Intrastate	New Jersey	.0150	.0111	.0128
United States Intrastate	New Mexico	.0150	.0111	.0128
United States Intrastate	New York	.0180	.0133	.0153
United States Intrastate	North Carolina	.0150	.0111	.0128
United States Intrastate	North Dakota	.0550	.0407	.0468
United States Intrastate	Ohio	.0150	.0111	.0128
United States Intrastate	Oklahoma	.0180	.0133	.0153
United States Intrastate	Oregon	.0150	.0111	.0128
United States Intrastate	Pennsylvania	.0180	.0133	.0153
United States Intrastate	Rhode Island	.0180	.0133	.0153
United States Intrastate	South Carolina	.0150	.0111	.0128
United States Intrastate	South Dakota	.0180	.0133	.0153
United States Intrastate	Tennessee	.0150	.0111	.0128
United States Intrastate	Texas	.0150	.0111	.0128
United States Intrastate	Utah	.0150	.0111	.0128
United States Intrastate	Vermont	.0180	.0133	.0153
United States Intrastate	Virginia	.0180	.0133	.0153
United States Intrastate	Washington	.0150	.0111	.0128
United States Intrastate	West Virginia	.0180	.0133	.0153
United States Intrastate	Wisconsin	.0180	.0133	.0153
United States Intrastate	Wyoming	.0180	.0133	.0153

International			
International Outbound			
Rates are per minute / 6 second minimum / 6 second rounding			
	Dedicated	Dedicated	Dedicated
Country	Rate Per Minute (USD)	Rate Per Minute (GBP)	Rate Per Minute (EUR)
Afghanistan	.3000	.2219	.2551
Afghanistan-Mobile	.3200	.2367	.2721
Albania	.2400	.1775	.2041
Albania-Mobile	.6000	.4438	.5101
Algeria	.1000	.0740	.0850
Algeria-Mobile	.6800	.5030	.5781

American Samoa	.0500	.0370	.0425
Andorra	.1800	.1331	.1530
Andorra-Mobile	.3500	.2589	.2976
Angola	.1000	.0740	.0850
Angola-Mobile	.2600	.1923	.2211
Anguilla	.4000	.2959	.3401
Anguilla-Mobile	.4200	.3107	.3571
Antarctica	2.6000	1.9232	2.2106
Antarctica-Norfolk Island	1.6638	1.2307	1.4146
Antigua and Barbuda	.3000	.2219	.2551
Antigua and Barbuda-Mobile	.4015	.2970	.3414
Argentina	.0330	.0244	.0281
Argentina-Buenos Aires	.0330	.0244	.0281
Argentina-Mobile	.2200	.1627	.1870
Armenia	.3800	.2811	.3231
Armenia-Mobile	.3800	.2811	.3231
Aruba	.1500	.1110	.1275
Aruba-Mobile	.3300	.2441	.2806
Ascension Islands	1.7500	1.2945	1.4879
Australia	.0200	.0148	.0170
Australia-Melbourne	.0120	.0089	.0102
Australia-Mobile	.0354	.0262	.0301
Australia-Perth	.0120	.0089	.0102
Australia-Sydney	.0120	.0089	.0102
Austria	.0800	.0592	.0680
Austria-Mobile	.0800	.0592	.0680
Austria-NGN	.3494	.2585	.2971
Azerbaijan	.5000	.3698	.4251
Azerbaijan-Mobile	.4000	.2959	.3401
Bahamas	.3535	.2615	.3006
Bahamas-Mobile	.3521	.2604	.2994
Bahrain	.2200	.1627	.1870
Bahrain-Mobile	.2200	.1627	.1870
Bahrain-NGN	.2200	.1627	.1870
Bangladesh	.0600	.0444	.0510
Bangladesh-Mobile	.0600	.0444	.0510
Barbados	.2200	.1627	.1870
Barbados-Mobile	.3200	.2367	.2721
Belarus	.4500	.3329	.3826
Belarus-Mobile	.4500	.3329	.3826
Belgium	.0500	.0370	.0425
Belgium-Mobile	.3682	.2724	.3130
Belgium-Mobile Base	.1127	.0834	.0958
Belgium-Mobile Mobistar	.0846	.0626	.0719
Belgium-Mobile Proximus	.0718	.0531	.0610
Belgium-NGN	.3660	.2707	.3112
Belize	.3100	.2293	.2636
Benin	.4200	.3107	.3571
Bermuda	.0700	.0518	.0595
Bhutan	.0750	.0555	.0638
Bhutan-Mobile	.0750	.0555	.0638

Bolivia	.3500	.2589	.2976
Bolivia-La Paz	.3500	.2589	.2976
Bolivia-Mobile	.3500	.2589	.2976
Bosnia/Herzegovina	.1997	.1477	.1698
Bosnia/Herzegovina-Mobile	.7219	.5340	.6138
Botswana	.2000	.1479	.1700
Botswana-Mobile	.2800	.2071	.2381
Brazil	.0200	.0148	.0170
Brazil-Belo Horizonte	.0120	.0089	.0102
Brazil-Brasilia	.0120	.0089	.0102
Brazil-Curitiba	.0120	.0089	.0102
Brazil-Florianapolis	.0120	.0089	.0102
Brazil-Fortaleza	.0120	.0089	.0102
Brazil-Goiania	.0120	.0089	.0102
Brazil-Governador Valadares	.0120	.0089	.0102
Brazil-Mobile	.1200	.0888	.1020
Brazil-Porto Alegre	.0120	.0089	.0102
Brazil-Recife	.0120	.0089	.0102
Brazil-Rio de Janeiro	.0120	.0089	.0102
Brazil-Salvador	.0120	.0089	.0102
Brazil-Sao Paulo	.0120	.0089	.0102
Brazil-Vitoria	.0120	.0089	.0102
British Virgin Islands	.2329	.1723	.1980
British Virgin Islands-Mobile	.2329	.1723	.1980
Brunei	.0600	.0444	.0510
Brunei-Mobile	.0616	.0456	.0524
Bulgaria	.1000	.0740	.0850
Bulgaria-Mobile	.4000	.2959	.3401
Burkina Faso	.4500	.3329	.3826
Burkina Faso-Mobile	.4500	.3329	.3826
Burundi	1.0242	.7576	.8708
Burundi-Mobile	1.0242	.7576	.8708
Cambodia	.1000	.0740	.0850
Cambodia-Mobile	.1000	.0740	.0850
Cameroon	.1810	.1339	.1539
Cameroon-Mobile	.4500	.3329	.3826
Canada	.0100	.0074	.0085
Canada-Yukon and NW Territories 867	.0566	.0419	.0481
Cape Verde Islands	.3394	.2511	.2886
Cape Verde Islands-Mobile	.4659	.3446	.3961
Cayman Islands	.2000	.1479	.1700
Cayman Islands-Mobile	.2000	.1479	.1700
Cayman Islands-NGN	.2000	.1479	.1700
Central African Republic	.6500	.4808	.5526
Chad	.8500	.6287	.7227
Chad-Mobile	.8500	.6287	.7227
Chile	.1000	.0740	.0850
Chile-Easter Island	.7653	.5661	.6507
Chile-Mobile	.1000	.0740	.0850
Chile-NGN	.1000	.0740	.0850

China	.0750	.0555	.0638
Colombia	.0500	.0370	.0425
Colombia-Mobile	.0500	.0370	.0425
Comoros	.6500	.4808	.5526
Comoros-Mobile	.6500	.4808	.5526
Congo	.6500	.4808	.5526
Cook Islands	2.5000	1.8492	2.1255
Costa Rica	.0400	.0296	.0340
Costa Rica-Mobile	.0900	.0666	.0765
Costa Rica-NGN	.0900	.0666	.0765
Croatia	.2200	.1627	.1870
Croatia-Mobile	.3800	.2811	.3231
Croatia-NGN	.2200	.1627	.1870
Cuba	.8500	.6287	.7227
Cyprus	.0600	.0444	.0510
Cyprus-Mobile	.1000	.0740	.0850
Cyprus-NGN	.0600	.0444	.0510
Czech Republic	.0500	.0370	.0425
Czech Republic-Mobile	.1500	.1110	.1275
Czech Republic-Prague	.0253	.0187	.0215
Dem. Rep. of Congo	.7597	.5619	.6459
Dem. Rep. of Congo-Mobile	.6899	.5103	.5866
Dem. Rep. of Congo-NGN	.7597	.5619	.6459
Denmark	.0180	.0133	.0153
Denmark-Mobile	.0500	.0370	.0425
Denmark-NGN	.0500	.0370	.0425
Diego Garcia	2.5626	1.8956	2.1788
Djibouti	.5500	.4068	.4676
Djibouti-Mobile	.5500	.4068	.4676
Dominica	.3500	.2589	.2976
Dominica-Mobile	.3500	.2589	.2976
Dominican Republic	.0500	.0370	.0425
Dominican Republic-Mobile	.1200	.0888	.1020
Ecuador	.2000	.1479	.1700
Ecuador-Mobile	.3000	.2219	.2551
Egypt	.1500	.1110	.1275
Egypt-Mobile	.1500	.1110	.1275
El Salvador	.2800	.2071	.2381
El Salvador-Mobile	.2800	.2071	.2381
Equatorial Guinea	.7000	.5178	.5952
Eritrea	.4000	.2959	.3401
Estonia	.0450	.0333	.0383
Estonia-Mobile	.5000	.3698	.4251
Estonia-NGN	1.5714	1.1624	1.3360
Eswatini	.2500	.1849	.2126
Eswatini-Mobile	.2500	.1849	.2126
Ethiopia	.3500	.2589	.2976
Ethiopia-Mobile	.3500	.2589	.2976
Falkland Islands	1.2645	.9354	1.0751
Faroe Islands	.0693	.0513	.0589
Fiji	.4500	.3329	.3826

Fiji-Mobile	.4500	.3329	.3826
Finland	.3450	.2552	.2933
Finland-Corporate Services	.3450	.2552	.2933
Finland-Helsinki	.3450	.2552	.2933
Finland-Mobile	.3900	.2885	.3316
Finland-NGN	.3450	.2552	.2933
France	.0300	.0222	.0255
France-Mobile	.1322	.0978	.1124
France-Mobile Orange	.1322	.0978	.1124
France-Mobile SFR	.1322	.0978	.1124
France-NGN	.3627	.2683	.3084
France-Paris	.0300	.0222	.0255
French Antilles/Martinique	.0160	.0118	.0136
French Antilles/Martinique-Mobile	.1500	.1110	.1275
French Guiana	.1500	.1110	.1275
French Guiana-Mobile	.2000	.1479	.1700
French Polynesia	.3500	.2589	.2976
French Polynesia-Mobile	.3500	.2589	.2976
Gabon	.5500	.4068	.4676
Gabon-Mobile	.5500	.4068	.4676
Gambia	3.0000	2.2191	2.5507
Gambia-Mobile	.6500	.4808	.5526
Georgia	.3000	.2219	.2551
Georgia-Mobile	.5000	.3698	.4251
Germany	.0120	.0089	.0102
Germany-Berlin	.0104	.0077	.0088
Germany-Frankfurt	.0104	.0077	.0088
Germany-Hamburg	.0104	.0077	.0088
Germany-Mobile	.0420	.0311	.0357
Germany-Munich	.0104	.0077	.0088
Germany-NGN	.0120	.0089	.0102
Ghana	.3200	.2367	.2721
Ghana-Mobile	.3200	.2367	.2721
Gibraltar	.0700	.0518	.0595
Gibraltar-Mobile	.2500	.1849	.2126
Global Mobile	11.6967	8.6520	9.9447
Greece	.0400	.0296	.0340
Greece-Athens	.0400	.0296	.0340
Greece-Mobile	.1500	.1110	.1275
Greenland	.7500	.5548	.6377
Greenland-Mobile	.7500	.5548	.6377
Grenada	.3200	.2367	.2721
Grenada-Mobile	.3200	.2367	.2721
Guadeloupe	.0500	.0370	.0425
Guadeloupe-Mobile	.1500	.1110	.1275
Guam	.0500	.0370	.0425
Guatemala	.1800	.1331	.1530
Guatemala-Mobile	.1800	.1331	.1530
Guinea	.7000	.5178	.5952
Guinea Bissau	.7187	.5316	.6111

Guinea Bissau-Mobile	.7187	.5316	.6111
Guinea-Mobile Areeba	.7000	.5178	.5952
Guinea-NGN	.7000	.5178	.5952
Guyana	.3500	.2589	.2976
Guyana-Mobile	.3500	.2589	.2976
Haiti	.4200	.3107	.3571
Haiti-Mobile	.3500	.2589	.2976
Haiti-NGN	.4200	.3107	.3571
Honduras	.2000	.1479	.1700
Honduras-Mobile Celtel	.2063	.1526	.1754
Hong Kong	.0433	.0320	.0368
Hong Kong-Mobile	.0450	.0333	.0383
Hungary	.0750	.0555	.0638
Hungary-Mobile	.0750	.0555	.0638
Iceland	.0300	.0222	.0255
Iceland-Mobile	.0900	.0666	.0765
India	.0193	.0143	.0164
India-Mobile	.0185	.0137	.0157
Indonesia	.0450	.0333	.0383
Indonesia-Mobile	.0600	.0444	.0510
Inmarsat	12.3156	9.1098	10.4709
Iran	.3000	.2219	.2551
Iran-Mobile	.3000	.2219	.2551
Iraq	.2500	.1849	.2126
Iraq-Mobile	.2500	.1849	.2126
Iraq-NGN	.2500	.1849	.2126
Ireland	.0150	.0111	.0128
Ireland-Mobile	.0718	.0531	.0610
Ireland-NGN	.0150	.0111	.0128
Israel	.0193	.0143	.0164
Israel-Mobile	.0450	.0333	.0383
Israel-Paltel	.2662	.1969	.2263
Israel-Paltel Mobile	.2662	.1969	.2263
Italy	.0150	.0111	.0128
Italy-Milan	.0150	.0111	.0128
Italy-Mobile	.0280	.0207	.0238
Italy-NGN	.0150	.0111	.0128
Italy-Rome	.0150	.0111	.0128
Ivory Coast	.4600	.3403	.3911
Ivory Coast-Mobile	.4600	.3403	.3911
Jamaica-658	.2800	.2071	.2381
Jamaica-876	.2800	.2071	.2381
Jamaica-Mobile	.2800	.2071	.2381
Japan	.0400	.0296	.0340
Japan-IP Phone	.0400	.0296	.0340
Japan-Mobile	.1000	.0740	.0850
Jordan	.3000	.2219	.2551
Jordan-Mobile	.3200	.2367	.2721
Kenya	.2800	.2071	.2381
Kenya-Mobile	.3000	.2219	.2551
Kiribati/Gilbert Island	3.1186	2.3068	2.6515

Kuwait	.1600	.1184	.1360
Kuwait-Mobile	.1800	.1331	.1530
Kuwait-NGN	.1600	.1184	.1360
Kyrgyzstan	.2200	.1627	.1870
Kyrgyzstan-Mobile	.3000	.2219	.2551
Laos	.1600	.1184	.1360
Laos-Mobile	.1600	.1184	.1360
Latvia	.6500	.4808	.5526
Latvia-Mobile	.9000	.6657	.7652
Latvia-NGN	.6500	.4808	.5526
Lebanon	.1965	.1454	.1671
Lebanon-Mobile	.2600	.1923	.2211
Lesotho	.4695	.3473	.3992
Lesotho-Mobile	.4695	.3473	.3992
Liberia	.5200	.3846	.4421
Libya	.3975	.2940	.3380
Libya-Mobile	.5285	.3909	.4493
Liechtenstein	.0900	.0666	.0765
Liechtenstein-Mobile	1.0500	.7767	.8927
Liechtenstein-NGN	.0900	.0666	.0765
Lithuania	.2500	.1849	.2126
Lithuania-Mobile	.7130	.5274	.6062
Lithuania-NGN	1.7714	1.3103	1.5061
Luxembourg	.2150	.1590	.1828
Luxembourg-Mobile	.2650	.1960	.2253
Macau	.1572	.1163	.1337
Madagascar	.8200	.6066	.6972
Madagascar-Mobile	.8200	.6066	.6972
Malawi	.4500	.3329	.3826
Malaysia	.0340	.0251	.0289
Malaysia-Johar Bahru	.0340	.0251	.0289
Malaysia-Kuala Lumpur	.0340	.0251	.0289
Malaysia-Mobile	.0340	.0251	.0289
Maldives	1.2000	.8876	1.0203
Maldives-Mobile	1.2000	.8876	1.0203
Mali	.3985	.2948	.3388
Mali-Mobile	.5375	.3976	.4570
Malta	.3000	.2219	.2551
Malta-Mobile	.3800	.2811	.3231
Marshall Islands	.4350	.3218	.3698
Mauritania	.8400	.6213	.7142
Mauritius	.2400	.1775	.2041
Mexico	.0120	.0089	.0102
Mexico-Guadalajara	.0120	.0089	.0102
Mexico-Mexico City	.0120	.0089	.0102
Mexico-Mobile	.0120	.0089	.0102
Mexico-Monterrey	.0120	.0089	.0102
Mexico-Satellite	.0144	.0107	.0122
Micronesia	.8485	.6276	.7214
Moldova	.5500	.4068	.4676
Moldova-Mobile	.5500	.4068	.4676

Monaco	.1500	.1110	.1275
Monaco-Mobile	.3910	.2892	.3324
Monaco-Mobile KFOR	.5530	.4091	.4702
Mongolia	.0296	.0219	.0252
Mongolia-NGN	.0296	.0219	.0252
Montenegro	.4250	.3144	.3613
Montenegro-Mobile	.4750	.3514	.4039
Montenegro-NGN	.4250	.3144	.3613
Montserrat	.3500	.2589	.2976
Morocco	.2000	.1479	.1700
Morocco-Mobile	.5500	.4068	.4676
Morocco-NGN	.2000	.1479	.1700
Mozambique	.1774	.1312	.1508
Mozambique-Mobile	.3200	.2367	.2721
Myanmar	.2450	.1812	.2083
Namibia	.1300	.0962	.1105
Namibia-Mobile	.1850	.1368	.1573
Nauru	1.8800	1.3906	1.5984
Nepal	.1950	.1442	.1658
Nepal-Mobile	.1950	.1442	.1658
Netherland Antilles	.2090	.1546	.1777
Netherland Antilles-Mobile	.1577	.1167	.1341
Netherland Antilles-NGN	.2090	.1546	.1777
Netherland Antilles-St Maarten	.1577	.1167	.1341
Netherlands	.1253	.0927	.1065
Netherlands-Mobile	.0600	.0444	.0510
Netherlands-Mobile Orange	.0600	.0444	.0510
Netherlands-NGN	.0363	.0269	.0309
New Caledonia	.4855	.3591	.4128
New Zealand	.0250	.0185	.0213
New Zealand-Mobile	.0750	.0555	.0638
Nicaragua	.1950	.1442	.1658
Nicaragua-Mobile	.2800	.2071	.2381
Niger	.5900	.4364	.5016
Niger-Mobile	.5900	.4364	.5016
Niger-NGN	.5900	.4364	.5016
Nigeria	.1700	.1257	.1445
Nigeria-Lagos	.1298	.0960	.1104
Nigeria-Mobile	.1700	.1257	.1445
Niue	2.8500	2.1081	2.4231
North Korea	.8560	.6332	.7278
North Macedonia	.2425	.1794	.2062
North Macedonia-Mobile	.5500	.4068	.4676
Northern Marianas	.0719	.0532	.0611
Norway	.0165	.0122	.0140
Norway-Mobile	.0300	.0222	.0255
Norway-Mobile Tele2	.0300	.0222	.0255
Norway-Mobile Telenor	.0300	.0222	.0255
Norway-NGN	.0985	.0729	.0837
Oman	.2800	.2071	.2381

Oman-Mobile	.3700	.2737	.3146
Pakistan	.0560	.0414	.0476
Pakistan-Mobile	.0560	.0414	.0476
Pakistan-NGN	.0560	.0414	.0476
Palau	.4000	.2959	.3401
Palestinian Authority	.1997	.1477	.1698
Palestinian Authority-Mobile	.2263	.1674	.1924
Panama	.0350	.0259	.0298
Panama-Mobile	.1800	.1331	.1530
Papua New Guinea	1.4200	1.0504	1.2073
Papua New Guinea-NGN	1.4200	1.0504	1.2073
Paraguay	.0700	.0518	.0595
Paraguay-Mobile	.1000	.0740	.0850
Peru	.0200	.0148	.0170
Peru-Lima	.0075	.0055	.0064
Peru-Lima-Mobile	.0075	.0055	.0064
Peru-Mobile	.0200	.0148	.0170
Peru-Rural	.2656	.1965	.2258
Philippines	.1525	.1128	.1297
Philippines-Mobile	.1525	.1128	.1297
Poland	.1540	.1139	.1309
Poland-Mobile	.1540	.1139	.1309
Poland-Mobile P4	.1540	.1139	.1309
Poland-NGN	.1540	.1139	.1309
Portugal	.0320	.0237	.0272
Portugal-Mobile	.1540	.1139	.1309
Principe and Sao Tome	2.5460	1.8833	2.1647
Qatar	.3000	.2219	.2551
Qatar-Mobile	.3000	.2219	.2551
Reunion Island	.6504	.4811	.5530
Reunion Island-Mobile	.2161	.1598	.1837
Romania	.0120	.0089	.0102
Romania-Mobile	.0300	.0222	.0255
Russia	.1200	.0888	.1020
Russia-Kazakhstan Mobile	.1800	.1331	.1530
Russia-Kazakhstan NGN	.1800	.1331	.1530
Russia-Mobile	.2500	.1849	.2126
Russia-Moscow	.0248	.0183	.0211
Rwanda	.4240	.3136	.3605
Rwanda-Mobile	.4240	.3136	.3605
San Marino	.2500	.1849	.2126
San Marino-Mobile	.2500	.1849	.2126
Satellite Network	11.6967	8.6520	9.9447
Saudi Arabia	.1265	.0936	.1076
Saudi Arabia-Mobile	.2150	.1590	.1828
Saudi Arabia-Riyadh	.1265	.0936	.1076
Senegal	.4515	.3340	.3839
Senegal-Mobile	.4515	.3340	.3839
Senegal-NGN	.4905	.3628	.4170
Serbia	.3200	.2367	.2721
Serbia-Kosovo	.3893	.2880	.3310

Serbia-Mobile	.4500	.3329	.3826
Seychelles Island	1.1979	.8861	1.0185
Sierra Leone	.6900	.5104	.5866
Sierra Leone-Mobile	.6900	.5104	.5866
Singapore	.0230	.0170	.0196
Singapore-Mobile	.0230	.0170	.0196
Sint Maarten	.1600	.1184	.1360
Slovakia	.0120	.0089	.0102
Slovakia-Mobile	.0844	.0624	.0718
Slovenia	.2335	.1727	.1985
Slovenia-Mobile	.5200	.3846	.4421
Slovenia-Mobile Mobitel	.5200	.3846	.4421
Slovenia-Mobile Simobil	.5200	.3846	.4421
Slovenia-Mobile Vega	.5200	.3846	.4421
Solomon Islands	1.5000	1.1095	1.2753
Somalia	.6950	.5141	.5909
South Africa	.2945	.2178	.2504
South Africa-Mobile	.2150	.1590	.1828
South Africa-NGN	.2945	.2178	.2504
South Korea	.0200	.0148	.0170
South Korea-Mobile	.0450	.0333	.0383
South Sudan	.7000	.5178	.5952
Spain	.0150	.0111	.0128
Spain-Mobile	.0651	.0482	.0553
Spain-Mobile Orange	.0651	.0482	.0553
Spain-Mobile Telefonica	.0651	.0482	.0553
Spain-Mobile Vodafone	.0651	.0482	.0553
Spain-NGN	.4000	.2959	.3401
Sri Lanka	.2200	.1627	.1870
Sri Lanka-Mobile	.2200	.1627	.1870
St. Helena	2.6347	1.9489	2.2401
St. Kitts/Nevis	.2502	.1851	.2127
St. Kitts/Nevis-Mobile	.2502	.1851	.2127
St. Lucia	.2800	.2071	.2381
St. Lucia-Mobile	.2800	.2071	.2381
St. Pierre and Miquelon	.2959	.2189	.2516
St. Vincent/Grenadines	.2100	.1553	.1785
St. Vincent/Grenadines-Mobile	.2642	.1954	.2246
Sudan	.2900	.2145	.2466
Sudan-Mobile	.2900	.2145	.2466
Suriname	.3350	.2478	.2848
Suriname-Mobile	.3350	.2478	.2848
Sweden	.0200	.0148	.0170
Sweden-Mobile	.0200	.0148	.0170
Sweden-Mobile Telia	.0200	.0148	.0170
Sweden-NGN	.0121	.0090	.0103
Switzerland	.0200	.0148	.0170
Switzerland-Mobile	.0800	.0592	.0680
Switzerland-Mobile Swisscom	.0800	.0592	.0680

Switzerland-NGN	.0200	.0148	.0170
Switzerland-Zurich	.0200	.0148	.0170
Syria	.2650	.1960	.2253
Syria-Mobile	.3000	.2219	.2551
Taiwan	.0280	.0207	.0238
Taiwan-Mobile	.1200	.0888	.1020
Tajikistan	.1800	.1331	.1530
Tanzania	.4292	.3175	.3649
Tanzania-Mobile	.4292	.3175	.3649
Thailand	.0515	.0381	.0438
Thailand-Mobile	.0515	.0381	.0438
Timor Leste	.4659	.3446	.3961
Togo	.4200	.3107	.3571
Togo-Mobile	.4200	.3107	.3571
Tokelau	1.9300	1.4276	1.6409
Tonga	1.2500	.9246	1.0628
Trinidad and Tobago	.1975	.1461	.1679
Trinidad and Tobago-Mobile	.1975	.1461	.1679
Tunisia	.9438	.6981	.8024
Tunisia-Mobile	.9438	.6981	.8024
Turkey	.0505	.0374	.0429
Turkey-Istanbul	.0505	.0374	.0429
Turkey-Mobile	.2185	.1616	.1858
Turkey-Mobile Turkcell	.2185	.1616	.1858
Turkey-Mobile Vodafone	.2185	.1616	.1858
Turkey-North Cyprus	.0505	.0374	.0429
Turkey-North Cyprus Mobile	.2185	.1616	.1858
Turkmenistan	.1925	.1424	.1637
Turks and Caicos	.2478	.1833	.2107
Turks and Caicos-Mobile	.2478	.1833	.2107
Tuvalu	2.1175	1.5663	1.8003
Uganda	.3872	.2864	.3292
Uganda-Mobile	.3872	.2864	.3292
UK	.0036	.0027	.0031
UK-Freephone	.0036	.0027	.0031
UK-London	.0036	.0027	.0031
UK-Mobile	.1934	.1431	.1644
UK-Mobile H3G	.0133	.0098	.0113
UK-Mobile O2	.0133	.0098	.0113
UK-Mobile Orange	.0133	.0098	.0113
UK-Mobile T-Mobile	.0133	.0098	.0113
UK-Mobile Vodafone	.0133	.0098	.0113
UK-NGN	.2662	.1969	.2263
UK-NGN 84	.2662	.1969	.2263
UK-NGN 845	.2662	.1969	.2263
UK-NGN 870	.2662	.1969	.2263
UK-VoIP and Multimedia	.0700	.0518	.0595
UK-Wide	.0314	.0232	.0267
Ukraine	.2950	.2182	.2508
Ukraine-Mobile	.2950	.2182	.2508
United Arab Emirates	.2400	.1775	.2041

United Arab Emirates-Dubai	.2400	.1775	.2041
United Arab Emirates-Mobile	.2400	.1775	.2041
Uruguay	.0800	.0592	.0680
Uruguay-Mobile	.2100	.1553	.1785
US Virgin Islands	.0145	.0107	.0123
USA	.0125	.0092	.0106
USA-Alaska	.0165	.0122	.0140
USA-Hawaii	.0150	.0111	.0128
USA-Puerto Rico	.0150	.0111	.0128
Uzbekistan	.1162	.0860	.0988
Uzbekistan-Mobile	.1162	.0860	.0988
Vanuatu	1.8150	1.3426	1.5431
Vatican City	.0225	.0166	.0191
Venezuela	.0250	.0185	.0213
Venezuela-Caracas	.0250	.0185	.0213
Venezuela-Maracaibo	.0250	.0185	.0213
Venezuela-Mobile	.1445	.1069	.1229
Venezuela-Valencia	.0250	.0185	.0213
Vietnam	.0850	.0629	.0723
Vietnam-Mobile	.0850	.0629	.0723
Wallis and Futuna Islands	1.7692	1.3087	1.5042
Western Samoa	2.2500	1.6643	1.9130
Yemen	.2065	.1527	.1756
Yemen-Mobile	.2065	.1527	.1756
Zambia	.4375	.3236	.3720
Zambia-Mobile	.4840	.3580	.4115
Zimbabwe	.2487	.1840	.2114
Zimbabwe-Mobile	.4800	.3551	.4081

Terms and Conditions Governing This Order

1. "Lumen" is defined for purposes of this Order as CenturyLink Communications, LLC d/b/a Lumen Technologies Group or its affiliated entities providing Services under this Order. The Lumen entity providing Services is identified on the invoice. This confidential Order may not be disclosed to third parties and is non-binding until accepted by Lumen, as set forth in section 4. Customer places this Order by signing or otherwise acknowledging (in a manner acceptable to Lumen) this document and returning it to Lumen. Pricing is valid for 90 calendar days from the date indicated unless otherwise specified.

2. Prior to installation, Lumen may notify Customer in writing (including by e-mail) of price increases due to off-net vendors or increased construction costs. Customer has 5 business days following notice to cancel this Order without liability; or otherwise, Customer is deemed to accept the increase.

3. If a generic demarcation point (such as a street address) is provided, the demarcation point for on-net services will be Lumen's Minimum Point of Entry (MPOE) at such location (as determined by Lumen). Off-net demarcation points will be the off-net vendor's MPOE. If this Order identifies aspects of services that are procured by Customer directly from third parties, Lumen is not liable for such services.

4. The Services are subject to Lumen's standard Master Service Agreement and Service Schedule(s), copies of which are available at : https://.lumen.com/en-us/about/legal/business-customer-terms-conditions.html or upon request,unless Customer has executed a service agreement with Lumen or one of its affiliates applicable to the Services on this Order. In that case, the most recent service agreement will apply to the extent not inconsistent with this Order and the current Service Schedule(s) will apply and is/are specifically incorporated into the applicable agreement by this reference. Notwithstanding to the contrary, Lumen will notify Customer of acceptance of requested Service in this Order by delivering (in writing or electronically) the date by which Lumen will install Service (the "Customer Commit Date"), bydelivering the Service, or by the manner described in a Service Schedule. Lumen will deliver a written or electronic notice that the Service is provisioned, at which time billing will commence. At the expiration of the Service Term,Service will continue month-to-month at the existing rates, subject to adjustment by Lumen on 30 day's written notice. If the service agreement or applicable service specific terms do not include cancellation or early termination charges and if Customer cancels or terminates Service for any reason other than Lumen's uncured default or if Lumen cancels or terminates for cause, then Customer will pay Lumen's standard cancellation or early termination liability charges in Lumen's standard Master Service Agreement.

5. Neither party will be liable for any damages for lost profits, lost revenues, loss of goodwill, loss of anticipated savings, loss of data or cost of purchasing replacement service, or any indirect, incidental, special, consequential,exemplary or punitive damages arising out of the performance or failure to perform under this Order. Customer's sole remedies for any nonperformance, outages, failures to deliver or defects in Service are contained in the service levels applicable to the affected Service.
6. Transport services ordered from Lumen will be treated as interstate for regulatory purposes except as otherwise agreed to in writing.
7. Charges for certain Services are subject to (a) a monthly property tax surcharge and (b) a monthly cost recovery fee per month to reimburse Lumen for various governmental taxes and surcharges. Such charges are subject to change by Lumen and will be applied regardless of whether Customer has delivered a valid tax exemption certificate. For additional details on taxes and surcharges that are assessed, visit www.lumen.com/taxes.
8. Unless otherwise set forth in a Service Attachment, Customer will pay Lumen's standard ancillary charges for expedites and additional activities, features, or options as set forth in the Ancillary Fee Schedule, available at www.lumen.com/ancillary-fees. If Lumen cannot complete installation due to Customer delay or inaction, Lumen may begin charging Customer and Customer will pay such charges.
9. For colocation, data center and/or hosting services, pre-arranged escorted access may be required at certain locations, and cross connect services are subject to whether facilities are available at the particular location to complete the connection.
10. For Internet Services provided in countries where Lumen does not currently hold a license to provide such Services, Customer consents and appoints Lumen as its agent to procure the services of third-party carriers.
11. If your network service utilizes TDM technologies, then the following applies: (a) During the Service Term and on 60 days' prior written notice, Lumen may re-provision Customer's off-net TDM Services ("Service Re-provision"). If Customer objects to the Service Re-provision, Customer may terminate the affected service by notifying Lumen in writing within 30 days of the date of the Service Re-provision notification and (b) During the Service Term, Lumen may increase rates for off-net TDM services. Lumen will provide Customer 60 days' prior written notice before implementing the increase ("Rerate Notice"). If Customer objects to the increase, Customer must notify Lumen in writing within 30 days of the date of the Rerate Notice whether Customer will (i) receive the affected service on a month-to-month basis or (ii) terminate the affected service, subject to early termination liability charges. Under subsection (ii),Customer's requested disconnect date must be within 90 days of the Rerate Notice. If Customer does not respond to the Rerate Notice, the affected service will continue to be provided at the increased rates set forth in the Rerate Notice.

911 ACKNOWLEDGEMENT

BY SIGNING THIS ORDER, I ACKNOWLEDGE THAT I HAVE READ AND UNDERSTAND THE "ACCESS TO EMERGENCY RESPONSE SERVICES" SECTION CONTAINED IN THE APPLICABLE SERVICE EXHIBIT/SERVICE SCHEDULE ATTACHED TO THE LUMEN OR CENTURYLINK MASTER SERVICE AGREEMENT OR, THE "911 EMERGENCY SERVICE" SECTION OR "EMERGENCY CALLING CAPABILITY" SECTION CONTAINED IN THE APPLICABLE SERVICE EXHIBIT/SERVICE SCHEDULE ATTACHED TO AN AFFILIATE AGREEMENT, OR IN THE "ACCESS TO EMERGENCY RESPONSE SERVICES" SECTION OF THE TERMS AND CONDITIONS IN THE APPLICABLE STANDARD SERVICE EXHIBIT/SERVICE SCHEDULE IF I HAVE NOT EXECUTED A LUMEN OR CENTURYLINK MASTER SERVICE AGREEMENT OR AN AFFILIATE AGREEMENT WITH AN APPLICABLE SERVICE EXHIBIT/SERVICE SCHEDULE. I FURTHER ACKNOWLEDGE THAT I HAVE READ AND UNDERSTAND THE DISCLOSURE OF LIMITATIONS SET FORTH IN THE EMERGENCY SERVICES ADVISORY AVAILABLE AT *http://www.centurylink.com/legal/HVIQSIP/911advisory.pdf*.

Declarations and Signatures

By signing below, the Customer agrees that the above rates shall apply to the applicable Services and are hereby incorporated into the Customer's Agreement with Lumen.

Customer
Signature:
Name:
Title:
Date:

Burbank Unified School District
Technology Services

REPORT TO THE BOARD

TO:	Members of the Board of Education
FROM:	Jason Hasty, Assistant Superintendent of Business Services
PREPARED BY:	James Avery, Director of Information Technology and Education Support
SUBMITTED BY:	Lourdes Moya, Administrative Secretary I
DATE:	June 25, 2026
SUBJECT:	Approval of Renewal of Agreement with Arey Jones for Lightspeed Alert and Lightspeed Content Filtering Licenses (General Fund and Safety Credits)

Background:
The district contracts Arey Jones for Lightspeed Alert and Lightspeed Content Filtering license services. Content filtering is required for all K-12 school districts to comply with the Children's Internet Protection Act (CIPA) and is required to qualify for E-Rate funding. Lightspeed Alert is an add-on service that helps identify students in crisis for protective intervention, this feature has been beneficial to student safety.

Discussion/Issues:
The district would like to renew the agreement with Arey Jones to continue Lightspeed Alert and Content Filtering services. Please see attached three-year renewal quote.

Fiscal Impact:
The contract cost to renew for three years is $145,020.00, with an annual cost of $48,340.00, paid from the General Fund.

Safety Credits were previously used to offset $15,000 of the cost of Lightspeed services. Once the District confirms the total safety credits received for the current year, staff will determine whether the same amount, or another eligible amount, may be reimbursed toward this year's cost.

Recommendation:
Jason Hasty, Assistant Superintendent of Business Services, recommends that the Board of Education approve the renewal of agreement between Burbank Unified School District and Arey Jones for Lightspeed Alert and Lightspeed Content Filtering Licenses, for a three-year contract, not to exceed $145,020.00, with an annual fee of approximately $48,340.00 (01.0-00000.0-00000-72000-5840-7400000) General Fund and Safety Credits, effective July 1, 2026 through June 30, 2029, and that authority to sign the agreement be exercised pursuant to BUSD—AR 3314, as presented.

1055 6th Ave #101
San Diego, California 92101

(800) 998-9199

Year 1, Invoice Date: 07-01-2026*

Description		Qty	Unit Price	Ext. Price	Tax
CLRM-A	**Lightspeed Classroom Management (Start Date: 7/1/26, End Date: 6/30/27)**	11000	$0.95	$10,450.00	N
FLTR-A	**Lightspeed Filter (Start Date: 7/1/26, End Date: 6/30/27)**	15000	$1.47	$22,050.00	N
ALRT-AI Only-1	**Lightspeed Alert (Start Date: 7/1/26, End Date: 6/30/27)**	11000	$1.44	$15,840.00	N

Price Subtotal: **$48,340.00**

Year 2, Invoice Date: 07-01-2027*

Description		Qty	Unit Price	Ext. Price	Tax
CLRM-A	**Lightspeed Classroom Management (Start Date: 7/1/27, End Date: 6/30/28)**	11000	$0.95	$10,450.00	N
FLTR-A	**Lightspeed Filter (Start Date: 7/1/27, End Date: 6/30/28)**	15000	$1.47	$22,050.00	N
ALRT-AI Only-1	**Lightspeed Alert (Start Date: 7/1/27, End Date: 6/30/28)**	11000	$1.44	$15,840.00	N

Price Subtotal: **$48,340.00**

Year 3, Invoice Date: 07-01-2028*

Description		Qty	Unit Price	Ext. Price	Tax
CLRM-A	**Lightspeed Classroom Management (Start Date: 7/1/28, End Date: 6/30/29)**	11000	$0.95	$10,450.00	N
FLTR-A	**Lightspeed Filter (Start Date: 7/1/28, End Date: 6/30/29)**	15000	$1.47	$22,050.00	N
ALRT-AI Only-1	**Lightspeed Alert (Start Date: 7/1/28, End Date: 6/30/29)**	11000	$1.44	$15,840.00	N

Price Subtotal: **$48,340.00**

1055 6th Ave #101
San Diego, California 92101

(800) 998-9199

JS 122410 BUSD Lightspeed Licenses with Alert 06.12.26

Prepared by:

Arey Jones Educational Solutions

Lorrie Lippert
8009989199
lorrie@areyjones.com
Contract:
NON-CONTRACT Non-Contract
NA

Prepared for:

Burbank Unified School District

1900 West Olive Avenue
Burbank, CA 91506
Lourdes Moya
(818) 729-3403
lourdesmoya@burbankusd.org

Quote Information:

Quote # 122410.1

Quote Date: 06/12/2026
Expiration Date: 07/12/2026
Product Category:

Quote Summary

Description	Amount
Year 1, Invoice Date: 07-01-2026*	$48,340.00
Year 2, Invoice Date: 07-01-2027*	$48,340.00
Year 3, Invoice Date: 07-01-2028*	$48,340.00

Non-taxable Subtotal:	**$145,020.00**
Grand Subtotal:	**$145,020.00**
Grand Total:	**$145,020.00**

*The order is non-cancellable at annual invoicing periods.

Burbank Unified School District
Instructional Services

REPORT TO THE BOARD

TO:	Members of the Board of Education
FROM:	Peter Knapik, Assistant Superintendent of Educational Services
PREPARED BY:	Rebecca Harris, Director of Elementary Education, Diversity, Equity, and Inclusion
SUBMITTED BY:	Glenda Diaz Nolasco, Administrative Secretary II
DATE:	June 25, 2026
SUBJECT:	Approval of Contracts with American Outdoor Education, Emerald Cove Outdoor Science Institute, High Trails Outdoor Science School, and Los Angeles County Outdoor Science School.

Background:
For more than twenty years, Outdoor Science School (OSS) has been an integral component of the educational experience at many Burbank Unified School District elementary schools. With parent chaperones, teachers, and classmates, students leave their traditional classrooms for a few days and experience a different type of education, one taught by the likes of rangers, naturists, and ecologists. Typically taking place during the fall and winter months, OSS has become somewhat of a rite of passage for fifth graders. Current plans are for the residential camp experience; however, should health conditions change, the contract could be canceled. The contract would be rewritten to accommodate a virtual science week.

According to High Trails Outdoor Science School, Los Angeles County Outdoor Science School, Emerald Cove Outdoor Science Institute, and American Outdoor Education (formerly known as Thousand Pines Outdoor Educators), the OSS curriculum is focused on the study of ecosystems. Students learn about different types of ecosystems, the parts of an ecosystem, how those parts function together, how humans interact with ecosystems, and science processes and practices. The curriculum is correlated to the California Next Generation Science Standards. At OSS, students can learn by experiencing and observing the natural environments that surround our schools and community.

All of this happens far away from Burbank, in the high elevations of the Angeles National Forest near Big Bear, Running Springs, San Gabriel Mountains, and Crestline, California.

District-Wide Goals 2025-2026
1. Students will be career/college ready via high-quality instruction
2. Students and Staff will be physically, emotionally, and mentally healthy

Discussion/Issues:
This contract is for fifth graders attending Disney, Emerson, Harte, Jefferson, McKinley, Miller, Providencia, Stevenson, and Washington Elementary Schools to participate in the outdoor science school offered by High Trails Outdoor Science School, Los Angeles County Outdoor Science School, Emerald Cove Outdoor Science Institute, and American Outdoor Education. Parents of the elementary schools will

fundraise to finance OSS through direct parent donations and fundraising activities from the Elementary school's fundraising parent groups.

Contract amounts are based on projected student participation. Adjustments to the total contract amount may be necessary if actual enrollment exceeds initial estimates

- Disney Elementary $12,150 (High Trails)
- Emerson Elementary $19,125 (High Trails)
- Harte Elementary $42,445.05 (American Outdoor Education)
- Jefferson Elementary $49,875 (Los Angeles County Outdoor Science School)
- McKinley Elementary $13,500 (High Trails)
- Miller Elementary $21,675 (High Trails)
- Providencia Elementary $22,500 (Los Angeles County Outdoor Science School)
- Stevenson Elementary $ $21,888 (Emerald Cove Outdoor Science Institute)
- Washington Elementary $25,642.50 (American Outdoor Education)

This cost does not include transportation.

Several principals have commented that due to the American Civil Liberties Union's (ACLU) recent lawsuit regarding fees vs. donations, it has become much more difficult for their sites to fund this program, as it has been challenging for parent groups and principals to make up the loss of funds that sites can raise. The District cannot charge individual students for this educational experience. Hence, the cost of OSS is dependent on parent donations and fundraising.

Fiscal Impact:
No direct fiscal impact.

Recommendation:
Peter Knapik, Assistant Superintendent of Educational Services, recommends that the Board of Education approve the contract with American Outdoor Education, Emerald Cove Outdoor Science Institute, High Trails Outdoor Science School, and Los Angeles County Outdoor Science School, effective July 1, 2026, through June 30, 2027, and that authority to sign the agreement be exercised pursuant to BUSD-AR 3314, as presented.

High Trails
Understanding how we can all fit together on one healthy planet

POST OFFICE BOX 2640
BIG BEAR CITY, CA 92314
TELEPHONE/FAX: 800 428-1851
WWW.HIGHTRAILS.COM

Outdoor Science School Contract

School:	Walt Disney Elementary	**Address:**	1220 W Orange Grove Ave
District:	Burbank USD	**City, State, Zip:**	Burbank, CA 91506
Number of Students:	54	**Phone:**	(818) 729-0100
Dates:	10/19-10/21/26	**Email:**	brookeschwartz@burbankusd.org
Price per Student:	$225	**Contact Person:**	Brooke Schwartz
Contract Due Date:	**June 1, 2026**	**Deposit Status:**	deposit on file, $0 due

1. This contract is due at High Trails by the above due date or High Trails reserves the right to fill the contracted date with another school. School agrees to maintain a deposit of $500.00 on account with High Trails. This deposit is refundable upon written notice of cancellation to High Trails no less than 120 days prior to the scheduled arrival date. Cancellations after that date will result in the loss of deposit. Cancellations within 90 days of scheduled arrival will result in full contracted amount due.
2. High Trails reserves the right to cancel any contract for any reason including but not limited to: insufficient number of students in attendance, non-return of contract or other paperwork, or past or present difficulty working with school, students, teachers or district officials.
3. School acknowledges and agrees that any fees incurred are due and payable upon arrival at High Trails unless previous arrangements have been approved. Should payment not be rendered in full during a school's stay at program, High Trails reserves the right to eliminate all offered scholarships. Students arriving late or leaving program early for any reason will not be refunded any part of the tuition fee.
4. High Trails has a minimum attendance requirement that is 90% of the contracted number of students. Should school not meet this minimum number, High Trails will not offer any student scholarships and school will be charged a $500 fee. High Trails reserves the right to cancel this contract if school cannot meet the minimum number of students.
5. School acknowledges that it is solely responsible for providing transportation of its students and teachers to and from High Trails throughout the program week, including and not limited to if a student is ill or removed from program for behavioral concerns. School shall provide at least one certified employee who will remain at High Trails throughout the entire contract period. School and District shall retain responsibility for its students from time of departure from the home school to time of return to the home school.
6. High Trails follows direction from local, county, state, and federal government agencies in respect to emergency situations including earthquakes, forest fires, terrorism events, and health crises. Should School be directed by any of the above agencies to not attend High Trails due to an emergency situation, this direction removes the financial obligation by the school to pay for services under the terms of this contract.
7. High Trails follows direction from Caltrans regarding access to facilities on state highways. If access to High Trails facility is not possible due to a Caltrans closure, this direction removes the financial obligation by the school to pay for services under the terms of this contract. If access is open and school chooses not to attend High Trails due to perceived risk of road conditions, school will still be liable for full contracted amount. School acknowledges that chains may be required for traction control on their busses for transportation to High Trails no matter the time of year they are attended. If school is forced to adjust arrival or departure dates of program due to emergency situations or road closures per CalTrans or government agencies, financial amount due shall be adjusted.
8. Schools, teachers, district officials and other personnel associated with the School or District agree to read and abide by all Rules and Regulations of High Trails. These rules are disclosed in full in the Schools and Parents section of our website. Schools agree to make available all pertinent rules and regulations to students and parents. Schools also agree to hold students and parents accountable to these policies.
9. Upon arrival at program, school shall provide High Trails with a completed and signed Health/Consent Form and Medication Form (if medication is needed) for each student in attendance. School acknowledges that High Trails cannot accept any medication for students with paperwork not filled out properly. Upon arrival school shall provide High Trails an updated list of all students in attendance.
10. High Trails maintains a commercial liability insurance policy; copies are available upon request.
11. School and District shall defend, indemnify, and hold High Trails, its officers, agents and employees harmless from any and all claims for damages and injuries resulting from the acts or omissions of school, its district, officers, agents, employees and students with respect to the outdoor education program. High Trails shall defend, indemnity and hold School, District and their officers, agents, employees and students harmless from any and all claims for damages and injuries resulting from the acts or omissions of High Trails and its officers, agents, and employees with respect to the outdoor education program.
12. Subject to any restrictions on assignment contained in this agreement, the agreement shall be binding upon and inure to the benefit of the parties hereto and their respective representatives, successors, and assigns. No written changes are permitted on this contract.

SCHOOL DISTRICT	HIGH TRAILS
Authorized Signature:	**Authorized Signature:** Leslie Porst
Printed Name:	**Printed Name:** Leslie Porst
Title: **Date:**	**Title:** Director of Operations, High Trails **Date:** 5/5/26

POST OFFICE BOX 2640
BIG BEAR CITY, CA 92314
TELEPHONE/FAX: 800 428-1851
WWW.HIGHTRAILS.COM

High Trails

Understanding how we can all fit together on one healthy planet

Outdoor Science School Contract

School:	Emerson	**Address:**	720 E Cypress Ave.
District:	Burbank USD	**City, State, Zip:**	Burbank CA 91501
Number of Students:	75	**Phone:**	(818) 729-1200
Dates:	10/21-10/23/26	**Email:**	jenniferalmer@burbankusd.org
Price per Student:	$255	**Contact Person:**	Jennifer Almer-Johnson
Contract Due Date:	**June 1, 2026**	**Deposit Status:**	$500 due

1. This contract is due at High Trails by the above due date or High Trails reserves the right to fill the contracted date with another school. School agrees to maintain a deposit of $500.00 on account with High Trails. This deposit is refundable upon written notice of cancellation to High Trails no less than 120 days prior to the scheduled arrival date. Cancellations after that date will result in the loss of deposit. Cancellations within 90 days of scheduled arrival will result in full contracted amount due.
2. High Trails reserves the right to cancel any contract for any reason including but not limited to: insufficient number of students in attendance, non-return of contract or other paperwork, or past or present difficulty working with school, students, teachers or district officials.
3. School acknowledges and agrees that any fees incurred are due and payable upon arrival at High Trails unless previous arrangements have been approved. Should payment not be rendered in full during a school's stay at program, High Trails reserves the right to eliminate all offered scholarships. Students arriving late or leaving program early for any reason will not be refunded any part of the tuition fee.
4. High Trails has a minimum attendance requirement that is 90% of the contracted number of students. Should school not meet this minimum number, High Trails will not offer any student scholarships and school will be charged a $500 fee. High Trails reserves the right to cancel this contract if school cannot meet the minimum number of students.
5. School acknowledges that it is solely responsible for providing transportation of its students and teachers to and from High Trails throughout the program week, including and not limited to if a student is ill or removed from program for behavioral concerns. School shall provide at least one certified employee who will remain at High Trails throughout the entire contract period. School and District shall retain responsibility for its students from time of departure from the home school to time of return to the home school.
6. High Trails follows direction from local, county, state, and federal government agencies in respect to emergency situations including earthquakes, forest fires, terrorism events, and health crises. Should School be directed by any of the above agencies to not attend High Trails due to an emergency situation, this direction removes the financial obligation by the school to pay for services under the terms of this contract.
7. High Trails follows direction from Caltrans regarding access to facilities on state highways. If access to High Trails facility is not possible due to a Caltrans closure, this direction removes the financial obligation by the school to pay for services under the terms of this contract. If access is open and school chooses not to attend High Trails due to perceived risk of road conditions, school will still be liable for full contracted amount. School acknowledges that chains may be required for traction control on their busses for transportation to High Trails no matter the time of year they are attended. If school is forced to adjust arrival or departure dates of program due to emergency situations or road closures per CalTrans or government agencies, financial amount due shall be adjusted.
8. Schools, teachers, district officials and other personnel associated with the School or District agree to read and abide by all Rules and Regulations of High Trails. These rules are disclosed in full in the Schools and Parents section of our website. Schools agree to make available all pertinent rules and regulations to students and parents. Schools also agree to hold students and parents accountable to these policies.
9. Upon arrival at program, school shall provide High Trails with a completed and signed Health/Consent Form and Medication Form (if medication is needed) for each student in attendance. School acknowledges that High Trails cannot accept any medication for students with paperwork not filled out properly. Upon arrival school shall provide High Trails an updated list of all students in attendance.
10. High Trails maintains a commercial liability insurance policy; copies are available upon request.
11. School and District shall defend, indemnify, and hold High Trails, its officers, agents and employees harmless from any and all claims for damages and injuries resulting from the acts or omissions of school, its district, officers, agents, employees and students with respect to the outdoor education program. High Trails shall defend, indemnity and hold School, District and their officers, agents, employees and students harmless from any and all claims for damages and injuries resulting from the acts or omissions of High Trails and its officers, agents, and employees with respect to the outdoor education program.
12. Subject to any restrictions on assignment contained in this agreement, the agreement shall be binding upon and inure to the benefit of the parties hereto and their respective representatives, successors, and assigns. No written changes are permitted on this contract.

SCHOOL DISTRICT	HIGH TRAILS
Authorized Signature:	**Authorized Signature:** Leslie Porst
Printed Name:	**Printed Name:** Leslie Porst
Title: **Date:**	**Title:** Director of Operations, High Trails **Date:** 5/5/26

AMERICAN OUTDOOR EDUCATION
P.O. BOX 3288, CRESTLINE, CA 92325

PROGRAM CONTRACT

Issued:
March 13, 2026

Bret Harte Elementary
3200 W. Jeffries
Burbank, CA 91505
(818) 558-5533

Jackson Warner
Email - jacksonwarner@burbankusd.org
Phone - (818) 558-5533

CONFERENCE INFORMATION

Conference Dates

Beginning: Monday, February 8, 2027
Ending: Thursday, February 11, 2027

Conference Duration

Nights: 3
Meals: 9

First Meal: Monday Lunch
Last Meal: Thursday Breakfast

	ESTIMATED	RATE
4 Day Student	85*	$509.00
4 Day Teacher	4*	$239.00
TOTAL	**89**	

**Requests to increase student registration will be based upon availability and is subject to approval by American Outdoor Education.*

A. ATTENDANCE

We guarantee 89 guests in full time attendance. Any number of guests above the guaranteed number will be accommodated based on availability. We will notify American Outdoor Education of the actual number of students (# of boys and # of girls) to attend at least two weeks before arrival.

B. FEES

Registration fees for early departures are non-refundable. This rate will include:

- 3 nights lodging, arriving at 10:30 AM and departing at 10:00 AM.
- 9 meals, starting with Monday Lunch and ending after Thursday Breakfast.
- We will do our best to ensure the following ratio: 1 qualified program instructor for every 20-30 students to guide students through the program elements.
- American Outdoor Education requires every group attending a retreat with American Outdoor Education to provide a certificate of insurance listing American Outdoor Education as additionally insured.
- American Outdoor Education requires every person attending a retreat to complete an online registration, medical history, and activity release form. This will be the only registration form accepted by American Outdoor Education.

We agree to pay a minimum guarantee of **$42,445.05** for **89** full-time guests. A non-refundable deposit of **$2,500.00** is due no later than **April 13, 2026** along with the signed contract. Dates will not be confirmed/secured until both the contract and deposit are received. You will receive a final invoice reflecting your balance two weeks prior to your arrival. All fees are due and payable before leaving camp. Any additional fees accrued due to increase in attendance, damages, etc. will be charged on an additional invoice submitted to the school uponparture

C. CANCELLATIONS & REBOOKING

Should your School/District cancel its reservation 180 days (6 months) in advance, all monies but the deposit amount will be refunded. Fewer than 180 days (6 months), the School/District is obligated to meet the full financial requirements of this contract. Should the School/District desire to change its reservation dates, the school shall be assessed no additional fees or penalties if it contracts for a date within the same fiscal year. If the re-booking date falls in the subsequent fiscal year, the full, contracted fees due shall be paid by the end of the originally contracted fiscal year. The School/District may decrease its guaranteed minimum by no more than 20% without restrictions until 90 days before the program date. If the school needs to decrease its guaranteed numbers and their beginning fiscal year is within the 90 day (3 month) period of their program date, the school has 30 days from the beginning of schools fiscal year to decrease its numbers by 20% without penalty. In the event a reservation is canceled by American Outdoor Education due to uncontrollable acts of nature, neither the School/District nor American Outdoor Education will be held responsible or penalized in any way, all monies except the deposit will be refunded to the School/District. The non-refundable School/District deposit will be applied to a rebooking.

On or before , we agree to inform American Outdoor Education of our anticipated count and pay the full amount of the contract guarantee less the pre-paid deposit. We will be invoiced for any balance due. If our group falls below the minimum guarantee, we will meet our entire financial obligation to American Outdoor Education for the full amount of the guarantee.

D. HOLD HARMLESS

School and/or District shall hold harmless, defend, and indemnify American Outdoor Education, its officers, agents and employees from any and all claims for damages resulting from the acts or omissions of the School District, its officers, agents, employees and pupils with the respect to the American Outdoor Education program. American Outdoor Education shall hold harmless, defend, and indemnify the School/District, its officers, agents, and employees from any and all claims for damages resulting from the acts or omissions of American Outdoor Education, its officers, agents, and employees with respect to the American Outdoor Education Program. American Outdoor Education has performed background checks and fingerprinting of their staff members.

E. REGULATIONS

We agree to comply with the following American Outdoor Education policies:

1. The School shall provide, six weeks prior to arrival, the School Information Form, Cabin Grouping Form and Program Selection Form. We also request all schools to submit an Endorsed Liability Insurance certificate naming American Outdoor Education as an additional insured.
2. The School shall administrate the online registration, medical history, and activity release form provided by American Outdoor Education to be completed by each person attending the camp before the arrival date.
3. All medications (prescription and non-prescription) shall be collected by the School from the students and submitted to the schools designated health care provider upon arrival to camp.
4. Prior to students boarding buses or travel vehicles, all students need to have their temperature checked. Any student whose temperature is 100 or above will need to stay at school until their temperature is normal and all symptoms of illness are gone.
5. The School/District shall retain responsibility for its students from the time of departure from home school to the time of return to the home school.
6. The School/District shall provide certified employees and parent chaperones to participate and take an active role in the program and supervision of students and must remain on camp premises throughout the program.
7. Minimum of 2 teachers/school staff.
8. Teachers will be required to supervise all sick students until they are sent home or they are feeling better.
9. All Schools are required to bring a transport vehicle to American Outdoor Education. Transportation would be used to transport non-life threatening emergencies to urgent care.
10. Students' medical prescriptions will be handled by the Thousand Pines Health Specialist; the American Outdoor Education staff will have the primary responsibility in first aid situations. The Leadership staff will remain in communication with school staff regarding status and disposition of any accident/illness.
11. School staff and American Outdoor Education staff are to work cooperatively involving students in activities that promote appropriate environmental ethics and social behavior. The American Outdoor Education Leadership shall be involved in the final determination regarding any students' behavioral infractions.
12. FIREARMS, WEAPONS, BB GUNS, ARCHERY EQUIPMENT shall not be brought to American Outdoor Education programs.
13. ALCOHOLIC BEVERAGES, TOBACCO AND ILLEGAL DRUGS will not be permitted at any time during the American Outdoor Education program or on camp property.
14. Pets are not permitted at the outdoor science school.

Authorized School Signature:

Typed or Printed Name: Title/Position

American Outdoor Education Signature:

American Outdoor Education reserves the right to update program curriculum and activities, based on state standards, current resources and/or availability.

American Outdoor Education - PO Box 3288 Crestline, CA. 92325
909-338-8900 phone - 909-338-3511 fax – registration@AmericanOutdoorEd.com - www.AmericanOutdoorEd.com/

Docusign Envelope ID: 422914D2-256B-4B19-A545-CDEEEE6A62CC

American Outdoor Education, LLC
P.O. Box 3288
Crestline, CA. 92325

AMOE Bret Harte 2/8-11/27
Expected Contract Minimum: $42,445.05
Deposit Requirement: $2,500.00
Deposit Due Date: 04/13/2026

Bret Harte Elementary
3200 W. Jeffries
Burbank, CA 91505
(818) 558-5533
jacksonwarner@burbankusd.org

Attendance

Product	Description	Attendees	Price	Total Price
4 Day Student		85	$509.00	$43,265.00
4 Day Teacher		4	$239.00	$956.00
				Total Attendance Amount: $44,221.00

Add-ons

Product	Description	Quantity	Unit Price	Total Price
				SubTotal: $0.00

Adjustments

Description	Discount
Pay On Time Discount (3% Off Per Student)	($1,297.95)
Free Teacher Discount (1 Free Adult Per 30 Students)	($478.00)
	Discount: $1,775.95
	Net Amount: $42,445.05

Payment Information

Payment Name/Code	Date of Payment	Check Reference number	Payment Methods	Amount Received
PMT-32593	Mar 13, 2026	Xfer from 1/2026	Transfer	$4,096.35
				Total Received: $4,096.35

Balance Due $38,348.70

The calculated per camper rate is $476.91

Payment Options: Cash, Check, eCheck, ACH Bank Transfer or Credit Card (3.5% Fee Applied)

Invoice #:AMOE-0023528
Mar 13, 2026

Copyright TM Camping.

Los Angeles County Office of Education

Los Angeles County Outdoor Science School

2026-2027 Registration Confirmation

RETURN TO: Gerardo Salazar, Outdoor & Marine Science
EMAIL TO: OMSFS Team outdooreducation@lacoe.edu
Los Angeles County Office of Education
9300 Imperial Highway, ECW3138 Downey, CA 90242-2890

District Name and Address: Burbank Unified 1900 West Olive Ave., Burbank CA 91506-2438		OSS Site Location: Camp Wrightwood	
School Name and Address: Thomas Jefferson Elementary 1900 North Sixth St., Burbank CA 91504 Phone Number: (818)729-1600		Week of: Oct 12 - 16	Number of Days: 5 Day
Number of Students: 105	Grade Level: Grade 5	School Principal Name: Ron Young Email: Ronyoung@burbankusd.org	
Advance Reservation Fee: $30 per student =$3150.00		Main Contact Person Name: Peter Knapik Email: Peterknapik@burbankusd.org	
Purchase Order number (if available):		District Contact Signing the Contract Name: Peter Knapik Email: Peterknapik@burbankusd.org	

School Responsibilities/Terms and Conditions

Changes to registrations must be made with this office *at least* **90 days prior to attendance**.
If such notification is not provided, LACOE may charge the District/School up to Ninety Percent (90%) of the original amount, per the Reservation Confirmation Sheet, to provide for irrecoverable costs.

Last day to change registration numbers: 7/14/2026

If you choose to cancel or change your numbers, please email our team at outdooreducation@lacoe.edu

A contract allowing your participation will be sent to each district represented. Please check with your district office to ensure the contract is processed for board approval. If you would like a copy, please contact us. The contract must be fully executed before the trip takes place.

It is the school's responsibility to process the request for a Purchase Order (PO). **PO must be received by our office at least 30 days before the trip.**

The school must provide one certificated teacher for every 25 students attending.

The school must provide **one cabin leader** for each **8-10** students attending.
Two weeks before attendance, please email the outdoor school your updated participant counts by gender (boys, girls, male cabin leaders, female cabin leaders). This is necessary for food orders and planning cabin groups. Date: 9/28/2026
A **non-refundable** registration deposit of **$30** per student registered is due upon registration. The amount will be deducted from the final invoice.
Cost for 2026-2027 is $475 per student for a 5-day week, $375 per student for a 4-day week, and $310 per student for a 3-day week.
Estimated cost for registration: 105 X $475= $49875 *This estimate is based solely on student attendance and does not include potential additional costs, such as extra cabin leaders, additional teachers, visitors' meals, or damage to camp facilities.*

Contact Teacher Date

Principal Date

High Trails
Understanding how we can all fit together on one healthy planet
POST OFFICE BOX 2640
BIG BEAR CITY, CA 92314
TELEPHONE/FAX: 800 428-1851
WWW.HIGHTRAILS.COM

Outdoor Science School Contract

School:	William McKinley Elementary school	**Address:**	349 W. Valencia Ave.
District:	Burbank USD	**City, State, Zip:**	Burbank, CA 91506
Number of Students:	60	**Phone:**	818-729-2000
Dates:	10/19-10/21/26	**Email:**	lizcostella@burbankusd.org
Price per Student:	$225	**Contact Person:**	Liz costella
Contract Due Date:	**June 1, 2026**	**Deposit Status:**	$500 due

1. This contract is due at High Trails by the above due date or High Trails reserves the right to fill the contracted date with another school. School agrees to maintain a deposit of $500.00 on account with High Trails. This deposit is refundable upon written notice of cancellation to High Trails no less than 120 days prior to the scheduled arrival date. Cancellations after that date will result in the loss of deposit. Cancellations within 90 days of scheduled arrival will result in full contracted amount due.
2. High Trails reserves the right to cancel any contract for any reason including but not limited to: insufficient number of students in attendance, non-return of contract or other paperwork, or past or present difficulty working with school, students, teachers or district officials.
3. School acknowledges and agrees that any fees incurred are due and payable upon arrival at High Trails unless previous arrangements have been approved. Should payment not be rendered in full during a school's stay at program, High Trails reserves the right to eliminate all offered scholarships. Students arriving late or leaving program early for any reason will not be refunded any part of the tuition fee.
4. High Trails has a minimum attendance requirement that is 90% of the contracted number of students. Should school not meet this minimum number, High Trails will not offer any student scholarships and school will be charged a $500 fee. High Trails reserves the right to cancel this contract if school cannot meet the minimum number of students.
5. School acknowledges that it is solely responsible for providing transportation of its students and teachers to and from High Trails throughout the program week, including and not limited to if a student is ill or removed from program for behavioral concerns. School shall provide at least one certified employee who will remain at High Trails throughout the entire contract period. School and District shall retain responsibility for its students from time of departure from the home school to time of return to the home school.
6. High Trails follows direction from local, county, state, and federal government agencies in respect to emergency situations including earthquakes, forest fires, terrorism events, and health crises. Should School be directed by any of the above agencies to not attend High Trails due to an emergency situation, this direction removes the financial obligation by the school to pay for services under the terms of this contract.
7. High Trails follows direction from Caltrans regarding access to facilities on state highways. If access to High Trails facility is not possible due to a Caltrans closure, this direction removes the financial obligation by the school to pay for services under the terms of this contract. If access is open and school chooses not to attend High Trails due to perceived risk of road conditions, school will still be liable for full contracted amount. School acknowledges that chains may be required for traction control on their busses for transportation to High Trails no matter the time of year they are attended. If school is forced to adjust arrival or departure dates of program due to emergency situations or road closures per CalTrans or government agencies, financial amount due shall be adjusted.
8. Schools, teachers, district officials and other personnel associated with the School or District agree to read and abide by all Rules and Regulations of High Trails. These rules are disclosed in full in the Schools and Parents section of our website. Schools agree to make available all pertinent rules and regulations to students and parents. Schools also agree to hold students and parents accountable to these policies.
9. Upon arrival at program, school shall provide High Trails with a completed and signed Health/Consent Form and Medication Form (if medication is needed) for each student in attendance. School acknowledges that High Trails cannot accept any medication for students with paperwork not filled out properly. Upon arrival school shall provide High Trails an updated list of all students in attendance.
10. High Trails maintains a commercial liability insurance policy; copies are available upon request.
11. School and District shall defend, indemnify, and hold High Trails, its officers, agents and employees harmless from any and all claims for damages and injuries resulting from the acts or omissions of school, its district, officers, agents, employees and students with respect to the outdoor education program. High Trails shall defend, indemnity and hold School, District and their officers, agents, employees and students harmless from any and all claims for damages and injuries resulting from the acts or omissions of High Trails and its officers, agents, and employees with respect to the outdoor education program.
12. Subject to any restrictions on assignment contained in this agreement, the agreement shall be binding upon and inure to the benefit of the parties hereto and their respective representatives, successors, and assigns. No written changes are permitted on this contract.

SCHOOL DISTRICT	HIGH TRAILS
Authorized Signature:	**Authorized Signature:** Leslie Porst
Printed Name:	**Printed Name:** Leslie Porst
Title: **Date:**	**Title:** Director of Operations, High Trails **Date:** 5/5/26

High Trails
Understanding how we can all fit together on one healthy planet

POST OFFICE BOX 2640
BIG BEAR CITY, CA 92314
TELEPHONE/FAX: 800 428-1851
WWW.HIGHTRAILS.COM

Outdoor Science School Contract

School:	Joaquin Miller Elementary	**Address:**	720 E Providencia Ave
District:	Burbank USD	**City, State, Zip:**	Burbank, CA 91501
Number of Students:	85	**Phone:**	(818) 515-8694
Dates:	10/21-10/23/26	**Email:**	melissapamperin@burbankusd.org
Price per Student:	$255	**Contact Person:**	Melissa Pamperin
Contract Due Date:	**June 1, 2026**	**Deposit Status:**	deposit on file, $0 due

1. This contract is due at High Trails by the above due date or High Trails reserves the right to fill the contracted date with another school. School agrees to maintain a deposit of $500.00 on account with High Trails. This deposit is refundable upon written notice of cancellation to High Trails no less than 120 days prior to the scheduled arrival date. Cancellations after that date will result in the loss of deposit. Cancellations within 90 days of scheduled arrival will result in full contracted amount due.
2. High Trails reserves the right to cancel any contract for any reason including but not limited to: insufficient number of students in attendance, non-return of contract or other paperwork, or past or present difficulty working with school, students, teachers or district officials.
3. School acknowledges and agrees that any fees incurred are due and payable upon arrival at High Trails unless previous arrangements have been approved. Should payment not be rendered in full during a school's stay at program, High Trails reserves the right to eliminate all offered scholarships. Students arriving late or leaving program early for any reason will not be refunded any part of the tuition fee.
4. High Trails has a minimum attendance requirement that is 90% of the contracted number of students. Should school not meet this minimum number, High Trails will not offer any student scholarships and school will be charged a $500 fee. High Trails reserves the right to cancel this contract if school cannot meet the minimum number of students.
5. School acknowledges that it is solely responsible for providing transportation of its students and teachers to and from High Trails throughout the program week, including and not limited to if a student is ill or removed from program for behavioral concerns. School shall provide at least one certified employee who will remain at High Trails throughout the entire contract period. School and District shall retain responsibility for its students from time of departure from the home school to time of return to the home school.
6. High Trails follows direction from local, county, state, and federal government agencies in respect to emergency situations including earthquakes, forest fires, terrorism events, and health crises. Should School be directed by any of the above agencies to not attend High Trails due to an emergency situation, this direction removes the financial obligation by the school to pay for services under the terms of this contract.
7. High Trails follows direction from Caltrans regarding access to facilities on state highways. If access to High Trails facility is not possible due to a Caltrans closure, this direction removes the financial obligation by the school to pay for services under the terms of this contract. If access is open and school chooses not to attend High Trails due to perceived risk of road conditions, school will still be liable for full contracted amount. School acknowledges that chains may be required for traction control on their busses for transportation to High Trails no matter the time of year they are attended. If school is forced to adjust arrival or departure dates of program due to emergency situations or road closures per CalTrans or government agencies, financial amount due shall be adjusted.
8. Schools, teachers, district officials and other personnel associated with the School or District agree to read and abide by all Rules and Regulations of High Trails. These rules are disclosed in full in the Schools and Parents section of our website. Schools agree to make available all pertinent rules and regulations to students and parents. Schools also agree to hold students and parents accountable to these policies.
9. Upon arrival at program, school shall provide High Trails with a completed and signed Health/Consent Form and Medication Form (if medication is needed) for each student in attendance. School acknowledges that High Trails cannot accept any medication for students with paperwork not filled out properly. Upon arrival school shall provide High Trails an updated list of all students in attendance.
10. High Trails maintains a commercial liability insurance policy; copies are available upon request.
11. School and District shall defend, indemnify, and hold High Trails, its officers, agents and employees harmless from any and all claims for damages and injuries resulting from the acts or omissions of school, its district, officers, agents, employees and students with respect to the outdoor education program. High Trails shall defend, indemnity and hold School, District and their officers, agents, employees and students harmless from any and all claims for damages and injuries resulting from the acts or omissions of High Trails and its officers, agents, and employees with respect to the outdoor education program.
12. Subject to any restrictions on assignment contained in this agreement, the agreement shall be binding upon and inure to the benefit of the parties hereto and their respective representatives, successors, and assigns. No written changes are permitted on this contract.

SCHOOL DISTRICT	HIGH TRAILS
Authorized Signature:	**Authorized Signature:** Leslie Porst
Printed Name:	**Printed Name:** Leslie Porst
Title: **Date:**	**Title:** Director of Operations, High Trails **Date:** 5/5/26

Los Angeles County Office of Education

Los Angeles County Outdoor Science School

2026-2027 Registration Confirmation

RETURN TO: Gerardo Salazar, Outdoor & Marine Science
EMAIL TO: OMSFS Team outdooreducation@lacoe.edu
Los Angeles County Office of Education
9300 Imperial Highway, ECW3138 Downey, CA 90242-2890

District Name and Address: Burbank Unified 1900 West Olive Ave. Burbank, CA 91506-2438		OSS Site Location: Camp Wrightwood	
School Name and Address: Providencia Elementary 1919 North Ontario St. Burbank, CA 91505 Phone Number: (818) 729-3100		Week of: Jan 19 - 22	Number of Days: 4 Day
Number of Students: 60	Grade Level: Grade 5	School Principal Name: Kennelyn Celeste Email: KennelynCeleste@burbankusd.org	
Advance Reservation Fee: $30 per student =$1800.00		Main Contact Person Name: Katherine Colvin Marvin Email: KatherineColvin@burbankusd.org	
Purchase Order number (if available):		District Contact Signing the Contract Name: Rebecca Harris Email: RebeccaHarris@burbankusd.org	

School Responsibilities/Terms and Conditions

Changes to registrations must be made with this office *at least* **90 days prior to attendance**.
If such notification is not provided, LACOE may charge the District/School up to Ninety Percent (90%) of the original amount, per the Reservation Confirmation Sheet, to provide for irrecoverable costs.

Last day to change registration numbers: 10/21/2026

If you choose to cancel or change your numbers, please email our team at outdooreducation@lacoe.edu

A contract allowing your participation will be sent to each district represented. Please check with your district office to ensure the contract is processed for board approval. If you would like a copy, please contact us. The contract must be fully executed before the trip takes place.

It is the school's responsibility to process the request for a Purchase Order (PO). **PO must be received by our office at least 30 days before the trip.**

The school must provide one certificated teacher for every 25 students attending.

The school must provide **one cabin leader** for each **8-10** students attending.
Two weeks before attendance, please email the outdoor school your updated participant counts by gender (boys, girls, male cabin leaders, female cabin leaders). This is necessary for food orders and planning cabin groups. Date: 1/4/2027
A **non-refundable** registration deposit of **$30** per student registered is due upon registration. The amount will be deducted from the final invoice.
Cost for 2026-2027 is $475 per student for a 5-day week, $375 per student for a 4-day week, and $310 per student for a 3-day week.
Estimated cost for registration: 60 X $375= $22500 *This estimate is based solely on student attendance and does not include potential additional costs, such as extra cabin leaders, additional teachers, visitors' meals, or damage to camp facilities.*

Contact Teacher Date

Principal Date

Date: Tuesday, May 12, 2026

To: Principal, **Robert Louis Stevenson Elementary School**
(Burbank Unified School District)

From: Emerald Cove Outdoor Science Institute (ECOS)

Subject: REQUEST FOR CONFIRMATION - **2026-2027** Dates of Participation

Thank you for registering with ECOS Institute. This letter is our request that you review and confirm the details below for **Robert Louis Stevenson Elementary School** to attend our program for the 2026-2027 school year. Your trip details are as follows:

Site	Scheduled Dates	3, 4 or 5-Day Program	Days of the Week	Grade	Number of Students (reserved #)	Tuition per Student	Projected Tuition Total
Camp Cedar Crest	12/9/26 - 12/11/26	3-Day	Wednesday - Friday	5th	80	$273.60 (includes 5% Early Registration discount)	$21,888.00

A **10% deposit of *$366.70 must be received by October 31, 2026** (based on your total projected tuition.)
*($2,188.80 deposit total for 2026-27 - $1,822.10 overpayment in 2025-26 = $366.70 deposit due for 2026-27)
Please mail deposit checks to: ECOS Institute, PO BOX 1027, San Clemente CA 92674

Please confirm your trip details and secure your reservation by signing below, and
return this letter by Tuesday, May 19, 2026, via email or fax, to:

Emerald Cove Outdoor Science Institute
Email: stevebenz@ecosinstitute.com
Phone/Fax: (949) 298-3267

This document is *NOT* the contract. The contract will be sent to your school/district and must be approved by the appropriate person at least 30 days prior to school participation.

***Once the contract is signed, your school/district will be financially responsible for at least 85% of the contracted number of students. (85% of 80 = 68). Final invoice generated at end of trip. Final payment due 30 days after trip.

If you would like a copy of the final contract, please contact your district directly.

_____ _____
Principal/Authorized Signature Date

Principal Name _____ Principal Email:_____

We look forward to seeing you at ECOS Institute!

American Outdoor Education, LLC
P.O. Box 3288
Crestline, CA. 92325

AMOE George Washington
10/6-9/26

Expected Contract Minimum: $25,642.50
Deposit Requirement: $1,500.00
Deposit Due Date: 03/06/2026

George Washington Elementary School
2322 North Lincoln Street
Burbank, CA 91504
818.585.7972
johnmichels@burbankusd.org

Attendance

Product	Description	Attendees	Price	Total Price
4 Day Student		50	$509.00	$25,450.00
4 Day Teacher		5	$239.00	$1,195.00
			Total Attendance Amount:	$26,645.00

Add-ons

Product	Description	Quantity	Unit Price	Total Price
			SubTotal:	$0.00

Adjustments

Description	Discount
Pay On Time Discount (3% Off Per Student)	($763.50)
Free Teacher Discount (1 Free Adult Per 30 Students)	($239.00)
Discount:	$1,002.50
Net Amount:	$25,642.50

Payment Information

Payment Name/Code	Date of Payment	Check Reference number	Payment Methods	Amount Received
			Total Received:	$0.00

Balance Due $25,642.50

The calculated per camper rate is $466.23

Payment Options: Cash, Check, eCheck, ACH Bank Transfer or Credit Card (3.5% Fee Applied)

Invoice #:AMOE-0023235
Feb 18, 2026

Copyright TM Camping.

Burbank Unified School District
Instructional Services

REPORT TO THE BOARD

TO:	Members of the Board of Education
FROM:	Peter Knapik, Assistant Superintendent of Educational Services
PREPARED BY:	Juan Noguera, Director of Adult Education
SUBMITTED BY:	Laura Erisman, Administrative Secretary
DATE:	June 25, 2026
SUBJECT:	Approval Agreement between Burbank Unified School District (Burbank Adult School) and AABC TV

Background:

Burbank Adult School is committed to informing the community about all the programs offered at the Adult School. Reaching out to different members in the community is one of the objectives that BAS has as part its mission. To disseminate information about the programs more efficiently, it is critical that BAS expands its ways to communicate and share with more members in the community to continue bringing opportunities to all adult learners.

Discussion/Issues: Burbank Adult School has promoted its programs through mailers and radio ads; however, it is evident that something else is needed to continue expanding and recruiting more adult learners who are looking to learn new skills to improve their living standards.

In order to expand and reach out to more members in the community, BAS plans to advertise its programs on AABC TV to ensure that the Armenian community obtains information and has access to BAS programs that are offered for free or at very low cost. The duration of the advertising campaign will be from July 1, 2026 to September 30, 2026. Utilizing an Armenian channel will certainly make a difference to continue supporting all members in the community.

Fiscal Impact:

Not to exceed $25,500.00 for three months paid from California Adult Education Program funds.

Recommendation:

Peter Knapik, Assistant Superintendent of Educational Services, recommends that the Board of Education approve the advertising campaign between Burbank Unified School District and AABC TV to promote the adult education programs in the Armenian community, effective July 1, 2026, not to exceed $25,500.00 for three months (25% each = 11.0-63910.0-41101-27000-5850-5330000, 11.0-63910.0-41102-27000-5850-5330000, 11.0-63910.0-41104-27000-5850-5330000, 11.0-63910.0-41106-27000-5850-5330000) and the authority to sign the Agreement be exercised pursuant to BUSD – AR 3314, as presented.

AABC TV

CHARTER CHANNEL 384
SPECTRUM 1623
DIGITAL CHANNEL 10.4
www.aabc.tv

ADVERTISING AGREEMENT

This agreement is made as of 6-26-26 between AABC TV and BURBANK ADULT SCHOOL hereinafter called the Advertiser.

1- The Advertiser agrees to purchase advertising space on AABC TV at the rate of $8,500.00 per month.
2- The duration of this agreement will be three (3) months total commencing July 1st to September 30, 2026.
3- The Advertisement will air 540 spots per month plus minimum of 20 live host announcements per month. In addition, there will be 2 interviews with faculty/staff – 25 minutes each and repeated 4 times for a total of 6 interviews per month.
4- The cost of Video Production will be $2,000.00 which shall be waived in lieu of the 3 month contract.

Accepted By: _____ Advertiser: _____

Burbank Unified School District
Administrative Services

REPORT TO THE BOARD

TO:	Members of the Board of Education
FROM:	Jason Hasty, Assistant Superintendent of Services
PREPARED BY:	Terri Ramirez-Adams, Senior Administrative Assistant
SUBMITTED BY:	Terri Ramirez-Adams, Senior Administrative Assistant
DATE:	June 25, 2026
SUBJECT:	Approval of Amended District Memberships 2026-2027

Background:

Annually, the District maintains memberships in various professional organizations that support District operations, professional development, instructional programs, student activities, business services, human resources, facilities, technology, food services, and Board governance

Discussion/Issues:

The attached District Membership List identifies the organizations, type of membership, estimated cost, funding source, and applicable account string for memberships proposed for the 2026-2027 school year.

These memberships provide access to professional resources, training, collaboration, compliance support, program resources, and other services that support District departments, schools, and programs.

Fiscal Impact:

Costs will be charged to the applicable funding sources and account strings as listed on the attached District Membership List.

Recommendation:

Jason Hasty, Assistant Superintendent of Business Services, recommends that the Board of Education approve the amended District Memberships for the 2026-2027 school year, as presented.

Burbank Unified School District Memberships for 2025-2026

Organization	Type of Membership	Estimated Cost 2026-27	Funding Source	String
Amazon Capital Services	District-Wide	$ 3,858.00	Purchasing	01.0-00000-0-00000-72000-5310-7530000
America's Battle of the Books	School Site	$ 50.00	Emerson	01.0-00000.0-11100-10000-4310-2030000
Association for California School Administrators (ACSA)	Individual	$ 1,950.00	Superintendent	01.0-00000.0-00000-71500-5310-7410000
Association for California School Administrators (ACSA)	Individual	$ 1,800.00	Business Office	01.0-00000.0-00000-72000-5310-7470000
Association for California School Administrators (ACSA)	Individual	$ 3,600.00	Instructional Services	01.0-00000.0-00000-72000-5310-7420000
Association for California School Administrators (ACSA)	Individual	$ 1,800.00	Human Resources	01.0-00000.0-00000-72000-5310-7550000
Association for Supervision and Curriculum Development (ASCD)	Individual	$ 150.00	Instructional Services	01.0-00000.0-00000-72000-5310-7420000
CA Career Development Association	School Site	$ 35.00	BHS	01.0-06350.0-38000-10000-5310-7910000
California Art Education Association	School Site	$ 35.00	Muir	01.0-00000.0-17001-10000-5310-3220000
California Association of School Business Officials(CASBO)	Institutional	$ 5,250.00	District Office	01.0-00000.0-00000-72000-5310-7400000
California Association of School Business Officials(CASBO)	Individual	$ 300.00	Business Office	01.0-00000.0-00000-72000-5310-7470000
California Career Development Association	Individual	$ 35.00	BHS	01.0-06350.0-38000-10000-5310-7910000
California Coalition for Adequate School Housing (CASH)	District	$ 1,222.00	Facilities	01.1-81500.0-00000-81100-5310-7520000
California Consortium for Independent Study	School Site	$ 60.00	Independent Learning	01.0-00000.0-00000-27000-5310-5750000
California Council for Adult Education (CCAE)	School Site	$ 750.00	Adult Education	11.0-63910.0-41100-27000-5310-5330000
California High School Coalition	Superintendent	$ 3,000.00	Superintendent	01.0-00000.0-00000-71500-5310-7410000
California School Board Association (CSBA)	Board	$ 14,500.00	Board of Education	01.0-00000.0-00000-71100-5310-7560000
California School Nutrition Association	District	$ 2,700.00	Food Services	13.0-53100.0-00000-37000-5310-7490000
California IT In Education (CITE)	District	$ 375.00	Technology	01.0-00000.0-00000-77000-5310-7730000
Cluster 4 Induction Directors	Individual	$ 400.00	Human Resources	01.0-00000.0-00000-72000-5310-7400000
Collaborative for High Performance Schools (CHPS)	District	$ 50.00	Districtwide	01.0-00000.0-00000-71500-5310-7411000
Costco	District	$ 110.00	Districtwide	01.0-00000.0-00000-72000-5310-7470000
Edjoin/San Joaquin County of Education	District	$ 4,299.00	Human Resources	01.0-00000.0-00000-72000-5310-7400000
Les Mills Media LTD	Individual	$ 119.88	JBHS	01.0-00000.0-17011-10000-5310-4320000
Los Angeles County School Trustees Association (LACSTA)	Board	$ 150.00	Board of Education	01.0-00000.0-00000-71100-5310-7560000
National Academy Foundation Program	BHS/JBHS	$ 14,000.00	CTE	01.0-06350.0-38000-10000-5310-7910000
National Association for Gifted Children (NAGC)	Individual	$ 119.00	Instructional Services	01.0-00000.0-00000-72000-5310-7421300
National Association of Secondary School Principals	School Site	$ 215.00	Luther Burbank MS	01.0-62640.0-00000-21503-5310-7429000
National Council of Teachers of Mathematics (NCTM)	School Site	$ 165.00	Edison	01.0-00000.0-11100-10000-5310-2020000
National Honor Society (NASSP)	School Site	$ 385.00	JBHS	01.0-00000.0-11100-10000-5310-4320000
National Student Clearinghouse	School Site	$ 1,200.00	Instructional Services	01.0-00000.0-00000-72000-5310-7420000
San Gabriel Valley Purchasing Association (SGVPA)	Individual	$ 30.00	Purchasing	01.0-00000.0-00000-72000-5310-7530000
School Employers Association of California (SEAC)	District	$ 2,350.00	Human Resources	01.0-00000.0-00000-72000-5310-7400000
SKILLS USA (JBHS/BHS)	JBHS/BHS	$ 3,500.00	CTE	01.0-06350.0-38000-10000-5310-7910000
Southern California School Nutrition Association (CSNA)	Institutional	$ 500.00	Food Services	13.0-53100.0-00000-37000-5310-7490000
lent Television Network	Individual	$ 125.00	JBHS	01.0-00000.0-18005-10000-5310-4320000

Organization	Type of Membership	Estimated Cost 2026-27	Funding Source	String
Super Co-Op Lodi USD (Lead Agency)	District	$ 2,200.00	Food Services	13.0-53100.0-00000-37000-5310-7490000

Burbank Unified School District
Business Services

REPORT TO THE BOARD

TO:	Members of the Board of Education
FROM:	Jason Hasty, Assistant Superintendent of Business Services
PREPARED BY:	Terri Ramirez-Adams, Senior Administrative Assistant
SUBMITTED BY:	Terri Ramirez-Adams, Senior Administrative Assistant
DATE:	June 25, 2026
SUBJECT:	Approval of Agreement for Professional Services, OPEB Actuarial Services (General Fund)

Background:

The Governmental Accounting Standards Board (GASB) requires public agencies to complete actuarial valuations for Other Post-Employment Benefits (OPEB) in order to comply with accounting and financial reporting requirements. These valuations assist the District in measuring and reporting the liability associated with retiree health benefits.

For financial reporting purposes under GASB 75, a full actuarial valuation is required at least every two years. The District previously approved actuarial services in 2023 for a full valuation and subsequent roll-forward valuation.

Discussion/Issues:

The District has received a proposal from Schwab Actuarial Services to provide actuarial valuation and consulting services related to the District's OPEB plans for the fiscal years ending June 30, 2026 and June 30, 2027. The services include GASB 75 compliance support, actuarial assumptions review, development of annual OPEB costs and Net OPEB Liability for financial reporting, presentation of results, and preparation of written actuarial valuation reports.

The agreement includes a full GASB 75 valuation for the period ending June 30, 2026, and an interim valuation for the period ending June 30, 2027. The 2025-2026 valuation schedule will begin upon signature of the engagement document.

Fiscal Impact:

The total cost of the agreement is not to exceed $9,375 (01.0-00000.0-00000-72000-5820-7401000, General Fund). This includes $6,250 for the GASB 75 full valuation for the period ending June 30, 2026, and $3,125 for the GASB 75 interim valuation for the period ending June 30, 2027.

Recommendation:

Jason Hasty, Assistant Superintendent, Business Services, recommends that the Board of Education approve the agreement between Burbank Unified School District and Schwab Actuarial Services to provide OPEB actuarial services, in an amount not to exceed $9,375 (01.0-00000.0-00000-72000-5820-7401000, General Fund), effective upon execution, for the fiscal years ending June 30, 2026 and June 30, 2027, and that authority to sign the agreement be exercised pursuant to BUSD—AR 3314, as presented.

Burbank Unified School District

A Commitment to Your Success

Actuarial Services
June 11, 2026

Schwab Actuarial Services



TABLE OF CONTENTS

Transmittal Letter

Qualifications and Experience

Technical Approach

Cost / Pricing

Appendix

Engagement Document

Burbank Unified School District
Attn: Jason Hasty
Interim Assistant Superintendent
1900 W. Olive Ave
Burbank, CA 91506

June 11, 2026

Dear Mr. Hasty,

We are delighted to present our qualifications to provide actuarial services to the Burbank Unified School District ("District" or "you"). Based on extensive knowledge and experience working with school districts, cooperatives, charter schools, local governmental entities and agencies, Schwab Actuarial Services has hands-on insight into current processes, financial reporting laws, and the challenges and opportunities related to benefit offerings. Going forward, that knowledge will ensure a unique partnership and uninterrupted actuarial and consulting services for the Other Post-Employment Benefits (OPEB) offered by the District. We are proposing to perform annual valuations in order to comply with the accounting and financial reporting requirements issued by the Governmental Accounting Standards Board (GASB).

We are committed to tailoring our services to exceed your expectations through the following advantages:

- **Extensive Experience.** We have deep experience with the Government Accounting Standards Board accounting standards. We have completed over 1,000 OPEB valuations and special studies, including the initial implementation of GASB 45, transition to GASB 75, and on-going valuation and consulting.
- **Proven Methodology.** We have a proven methodology, designed specifically for actuarial valuations that utilize consulting, tax, and accounting in-depth knowledge to develop solutions that will meet and exceed your needs.
- **Public Sector Experience.** We have significant public sector (governmental) experience and have assisted with the actuarial valuation and consulting needs of over 100 entities, including many within Los Angeles and surrounding counties.
- **Highly Responsive and Timely Service.** Our clients emphasize that we exude great care and are attentive and timely. We will always be available to the District management team and the Board of Education to ensure that the service you receive is immediate and responsive.
- **Value That Surpasses Fees.** The cornerstone of our service approach is value. We provide constructive, value-adding business advice.

In closing, permit me to emphasize one final point: we want your business. We feel privileged and consider it our duty to serve the public. We are confident that Schwab Actuarial Services is uniquely qualified to serve the Burbank Unified School District excellently. We are energetic, experienced, and responsive to our clients. I will personally see to it that all your needs are met with the high-quality service I consistently provide every client. Thank you for the opportunity and considering us to help with this important directive.

Sincerely,

Brett Schwab, ASA, EA, MAAA
Principal & Lead Actuary
312-244-9022
BrettSchwab1@yahoo.com

Copy: Terri Ramirez-Adams, Senior Administrative Assistant

Qualifications and Experience

We have experience working with numerous school districts, cooperatives, charter schools, municipalities, counties, associations, and other local units in both the initial implementation and the on-going actuarial valuations of post-employment healthcare benefit programs as required by the Government Accounting Standards Board (GASB). We have provided over 1,000 valuations and special studies for over 100 entities.

We have experience in all actuarial and retirement-related consulting work, within both the public and private sectors. We have a long history of working with, consulting, and managing companies in regard to all aspects of their health, retirement, and other benefit programs. We partner and consult with entities on the main policy levers that drive the performance of these benefit programs – the design, investment, contribution, and governance. This helps organizations meet their unique HR, Finance, Tax and Accounting needs and drives an effective workforce management strategy while minimizing the risk impact and cost to the business.

Brett Schwab will lead and manage the Burbank Unified School District engagement. He holds a Bachelor of Science degree in actuarial science, with high distinction from the University of Illinois, Urbana-Champaign. He is a member and meets all the qualification standards of the American Academy of Actuaries. He is also an Associate of the Society of Actuaries and an Enrolled Actuary under the Employee Retirement Income Security Act.

- Brett is accountable for projects including assisting management through union negotiations relating to pension and healthcare benefits, determining funding and expense strategies, and educating and advising clients on the implications of GASB changes.
- Prior to Schwab Actuarial Services, Brett was the Lead Actuary in the National office of Grant Thornton and responsible for all aspects of benefit plan valuation and consulting items. He oversaw the actuarial work performed in the Central and West regions. Prior to joining Grant Thornton, Brett served as a Principal Consultant with Mercer, one of the largest HR consulting firms in the world. He led teams of actuaries that performed calculations, projections of liabilities, assets, and cash funding requirements.
- Brett is a frequent presenter at actuarial associations. He partnered with Pension360 and presented on GASB 67/68 and the measurement and accounting changes for State and local pension plans. He also worked with ASPPA College of Pension Actuaries and led a presentation on the FASB Accounting Standards Codification No. 715 as it relates to retiree healthcare plans, including the measurement of obligations and determining periodic costs. His articles, Benefit plan sponsors need to consider new mortality tables and Introducing New Accounting Standards GASB 75, were published in a Benefits Bulletin.

Listed below are just a few examples of how Brett partnered with companies as their trusted advisor.

- Numerous board presentations: Educate and advise on the changes needed to the Comprehensive Annual Financial Report related to GASB accounting standard amendments, and the associated cost impacts.
- Adoption of cash funding strategies: Developed an interactive tool to model alternate interest rate environments, future asset returns, alternate funding policies, future workforce demographics and the resulting projected funding levels.
- Presentations and discussions with Union Committees: Partnered with executive management through the negotiation process resulting in benefit realignment through a total reward strategy.
- Strategic employee benefit consulting: Consulted for a large public sector organization including plan design, utilization and claims reviews, vender searches, and compliance services (IRS, DOL, ACA, etc.). Facilitated a collaborative health care committee consisting of union and administration members.

We have decades of experience making sure that:

- Valuations are performed to meet the desired plan sponsor objectives.
- These valuations are performed using appropriate actuarial funding and accounting methods.
- The assumptions are management's best estimate solely with respect to that individual assumption and in the aggregate.

However, we work with our clients and go beyond giving just high-quality valuation and other core recurring actuarial services. We will have continuous collaboration with you and your executive management team and board to identify and confirm benefit policies to make sure they align with the value drivers of your organization. Your actuary should understand your business and industry and look for unbiased ways to unlock that value through your benefit programs.

Our Technical Approach to Meeting Your Needs

Below is a description of the overall approach and specific steps necessary to satisfy the accounting and financial reporting standards for post-employment healthcare benefits (OPEB) mandated under GASB 75. The actual schedule will be customized or accelerated as needed to meet the individual needs of the Burbank Unified School District.

Each year, we recommend the actuarial methods of the calculations and the key assumptions to be used in the valuation of the OPEB. The methods and assumptions selected are ultimately the District's decision, however we will partner with you through the setting process to ensure that they are reasonable and appropriate based on the current environment and future expectations.

- The actuarial cost methods will be determined in accordance with the GASB standards.
- The actuarial assumptions will rely on Actuarial Standards of Practice No. 27, *Selection of Economic Assumptions for Measuring Obligations* and Actuarial Standards of Practice No. 35, *Selection of Demographic and Other Noneconomic Assumptions for Measuring Obligations*.

As part of the assumption setting process, we will also utilize the detailed CalSTRS and CalPERS experience studies performed periodically to ensure that the assumptions continue to fulfill the applicable accounting requirements that each actuarial assumption represents management's "best estimate solely with respect to that individual assumption." As part of the valuation process, we perform a gain/loss analysis by source related to the District-specific OPEB. This adds another layer of review to help identify any assumptions that create large and/or consistent liability movements. In addition, and prior to the formal valuation, we can incorporate your auditors to obtain their sign-off up front, which rules out any re-measurements that would be requested upon review during the audit cycle.

Phase 1	• Planning and Kick-off Meeting • Data Collection and Review
Phase 2	• Determine Actuarial Assumptions
Phase 3	• Preliminary GASB 75 Valuation • Presentation of Results
Phase 4	• Final Accounting Valuation • Preparation of Actuarial Reports

PHASE 1: KICK-OFF MEETING AND INFORMATION GATHERING

The purpose of this phase is to develop the organizational foundation for the project, gather and review the information necessary to perform the valuation, and lay the foundation to build a successful relationship between the District and Schwab Actuarial Services. In our experience, this discussion is extremely important because it is often the first-time direct stakeholders have an opportunity to discuss goals and concerns with us.

The following timeline is related to a typical fiscal year and is consistent with actuarial services we provide to similarly situated schools. The schedule can be changed based on your specific timing needs. The July 1, 2025 – June 30, 2026 fiscal year valuation will utilize updated demographic information[1], assumptions, and adjusted for changes in the economic environment.

Data Gathering

Utilizing accurate participant data, claim, and membership experience is essential for actuarial valuations. This task involves analyzing the relevant information for reasonableness and integrity. In order to complete this task, we will:

- Discuss the data collection procedures with the appropriate District personnel,
- Provide an excel spreadsheet that indicates the needed general plan and census information that you will populate, and
- Review and confirm the summary of plan provisions and research any alternative plans that may exist.

[1] For financial reporting purposes under GASB 75, a full actuarial valuation is required at least biennially. In years one and three, updated demographic information is used and an actuarial valuation is completed. In years two and four, a valuation is performed using the prior year census information and adjusting the costs and liabilities for changes in the economic environment.

The typical[2] timeline, based on the District's schedule, begins with a formal request in early March seeking relevant information. On or about April 1, the District is expected to send the relevant data to Schwab Actuarial Services to perform the valuation. It is expected that the data will be complete and accurate. If we identify errors and inconsistencies, you will need to correct and resubmit for valuation purposes.

Kick-off Meeting

After the data request has been issued, we will have a conference call with the appropriate personnel from the Burbank Unified School District to kick-off the valuation processes. The purpose of the meeting is to confirm overall project objectives, review the methodologies, and confirm ongoing roles and responsibilities.

The agenda for this meeting will include the following items:

- Confirm expectations and definitions of success,
- Confirm project approach, methodology and expected deliverables,
- Review project schedules, key milestones and target dates for meetings and deliverables, and
- Discuss data and document requests.

PHASE 2: DETERMINATION OF ACTUARIAL ASSUMPTIONS

The selection of actuarial assumptions will be guided by applicable actuarial standards. This involves an analysis of the actuarial assumptions (both economic and non-economic). The final assumptions are selected by the District however we will perform a review and provide information which will enable you to select appropriate actuarial assumptions as required under the standards. We will:

- Analyze plan experience and the underlying cause of any recent fluctuations, if necessary,
- As appropriate, provide a range of reasonable assumptions to be used in calculating the OPEB liabilities,
- Increase your understanding of the assumptions used in the actuarial calculations,
- Discuss assumptions with you to gain understanding of the various issues, including the impact on OPEB financials, and
- Comparison with assumptions used by similarly situated organizations, including those in the relative location of the District.

All assumptions are based on the best estimate of anticipated experience unless prescribed otherwise and should include recent plan-specific experience and reasonable near-term expectations. Expectations should include input from the District, including the Board of Education as applicable. This is particularly important regarding assumptions relating to turnover, retirement and salary increases.

PHASE 3: PRELIMINARY[3] ACTUARIAL VALUATION

The formal actuarial valuation report will have all the necessary schedules needed for your financial statements. GASB 75 mandates that the actuarial valuation and accompanying disclosures be based on the economic environment as of the fiscal year-end. Rather than wait until the yield curve is published and available in July (after the close of the fiscal year), Schwab Actuarial Services performs a preliminary valuation of the liabilities and funded status to set expectations for interested stakeholders.

At Schwab Actuarial Services, actuarial valuations are more than simply assuming the status quo, performing a valuation and providing a report. Each valuation is an opportunity to review and challenge assumptions and methods, explore new ideas, consider strategic opportunities, and identify hidden risks.

On or about May 1, we will complete the following tasks:

Preliminary Actuarial Valuation

This task incorporates the most recent available yield curve, the agreed upon demographic assumptions and actuarial methods to determine the preliminary benefit liabilities and obligations. We will:

- Establish an actuarial model to evaluate benefit liabilities under the substantive plan (the plan as understood by you and members).
- Calculate the applicable OPEB liabilities, the fiscal year OPEB benefit costs, and reconciliation of the current funded status.
- Measure present values of projected benefits, future cash flow needs, accrued liabilities, normal cost and associated annual expense.

[2] The 2025/2026 fiscal year valuation schedule will be delayed and start upon signature of the attached formal engagement document.
[3] The preliminary results will be based on a discount rate using the most recent economic environment. The final OPEB costs and obligations included in the financial statements will be based on the June 30th yield curve that is published early July.

Presentation of Results

- Prepare a 1-page high-level summary of accrued liabilities, funded percentage, annual expense, and demographic information.
- Present and discuss all changes from the prior year's valuation and disclosures including the impact of each item.

PHASE 4: PREPARATION OF THE ACTUARIAL VALUATION REPORT

Once the June 30 bond rates are published in early July, we will generate the final results and financial exhibits for reporting purposes.

The formal written actuarial valuation report documenting the results and exhibits under GASB 75 will contain:

- Executive summary of results,
- Exhibits containing information relevant to satisfying disclosure requirements under GASB (including footnote disclosures),
- Present value of projected future benefits including split of past, current, and future accruals,
- Reconciliation of actuarial accrued liability with prior valuations,
- Summary of census data,
- Projected OPEB cash flows, including the impact of implicit rate subsidies,
- Summary of actuarial assumptions,
- Summary of plan provisions, and
- Actuarial Certification indicating compliance with the "Qualification Standards for Actuaries issuing Statement of Actuarial Opinion in the United States."

In addition, we will include telephonic support with the auditors to discuss the reports.

Burbank Unified School District will enjoy the following benefits

- Extensive experience with employment benefits.
- A proven methodology, designed specifically for actuarial valuations that utilizes consulting, tax and accounting in-depth knowledge to develop solutions that meet your needs.
- Effective work at all organization levels, including staff, middle and executive management, committees, and boards.
- Significant skills and experience working on numerous assignments with similarly situated entities.

Most importantly, the District will benefit from the continuity of the actuarial service team, its evolved and established processes, in addition to the unquantifiable benefit of program familiarity, specific institutional history and knowledge.

Project Team Availability

You want your service provider to be accessible and responsive. We may not be in your backyard, but you'll feel like we are.

- Easy access to engagement team members and industry specialists.
- Regularly scheduled meetings and calls throughout the year.

The bottom line: We're 100% committed to your projects, and we're always only a phone call away.

Quality Assurance

At Schwab Actuarial Services, quality is the top priority. We enforce consistent, high-quality standards in service delivery by using a quality assurance process that embraces all methodologies, deliverables, and tasks. This process is used throughout the projects to establish and maintain a positive client relationship, mitigate risk, and meet or exceed client expectations.

- Appropriate planning, instructions, and helping to ensure that work programs and work papers adequately cover the areas and testing performed.
- Adherence to any laws, regulations, and government or industry standards that specify requirements.
- Procedures and required documentation for planning, execution, and wrap-up.
- Ongoing development and training.

These quality assurance processes enable us to deliver superior service to the Burbank Unified School District.

Cost / Pricing

Your investment

You will know up front what to expect from us and how much it will cost to achieve your results. We will provide industry-leading services at a competitive fee relative to the value of our experience. We will be focused on your objectives, get the work done according to best-in-class methodologies, and provide the insights you need to realize your future potential for growth.

Based on our experience, we anticipate that the fees for the requested services as outlined below. Our fees are amongst the lowest offered by other actuaries in the industry. We work very efficiently, utilizing the most current technology. By keeping our own costs low, we transfer the cost savings to our clients. Although our fees are lower than most other actuaries' fees, our professional standards and high ethical standards prevent us from skimping on quality.

Note that if the District determines that a particular service is not needed for a fiscal year, then we will not perform the analysis, and the associated fee will not be invoiced. The agreement will commence upon signature of the attached formal engagement letter, and it will not expire, unless earlier terminated. We shall each have the right to terminate the contract, in whole or in part, at any time without further obligation to the other by giving written notice to the other party.

GASB 75 Valuation for period ending June 30, 2026	$6,250 (full valuation)
GASB 75 Valuation for period ending June 30, 2027	$3,125 (interim valuation)

We will discuss with you any circumstances that require us to do additional actuarial analyses or consulting services which may include, but are not limited to, work to satisfy our obligations under applicable professional standards including additional fact-gathering, and unforeseen scope changes. If additional out-of-scope work is requested, we will work with the District and provide a separate proposal and accompanying engagement documents.

Our investment

NO SURPRISE FEES

We practice a policy of "no surprises." You know the fee up front — without any hidden costs. When conditions require more work than either of us anticipated, we will ask for your approval before we proceed further. Should these fees not correspond to your expectations, we would welcome the opportunity to further discuss the engagement, and the level of work required.

QUESTIONS AND CONSULTATION

We strongly encourage frequent communication and understand the importance of keeping you informed about emerging issues. As such, we do not charge for questions or conversations that do not require substantial research or time. The fees include telephone consultations, meaningful thought leadership, and other items related to routine business issues. For technical issues not included in the original scope of work and which require significant additional time, fees will be billed at our discounted rates. You will never receive a bill unless fees have been discussed with you first.

Appendix

On the following pages, we have included the formal Engagement Document.

Burbank Unified School District

Statement of Work for GASB 75 Actuarial Services

This purpose of this Statement of Work dated June 11, 2026, is to describe the scope of services ("Services") the Burbank Unified School District ("District" or "Client" or "you") is requesting Schwab Actuarial Services to perform, and to set forth the agreed fee, timing and other matters related to the Services.

This Statement of Work contemplates the performance of service over a two-year period for actuarial valuation and associated consulting related to your offered post-employment healthcare benefits other than pensions (OPEB) for the fiscal years ending June 30, 2026 and June 30, 2027.

The services we will provide

We shall provide the following actuarial and consulting services related to compliance with GASB 75 accounting and financial reporting for your OPEB plans:

- We shall assist you by providing actuarial valuation and consulting services related to all OPEB plans identified,
- Facilitate the selection of reasonable actuarial assumptions for purposes of GASB 75 compliance,
- Develop annual OPEB costs and Net OPEB Liability for financial reporting purposes according to GASB 75,
- Present results to the relevant audience within your group telephonically, and
- Prepare a written actuarial valuation summary documenting the results under GASB 75.

Specific steps necessary to satisfy the accounting and financial reporting standards of employers mandated under GASB 75 include:

Data review

Utilizing accurate participant data and claims information is essential for an OPEB actuarial valuation. This task involves analyzing the relevant participant census and claims data for reasonableness and integrity. All data from you is to be complete and accurate. If errors and inconsistencies are identified, you will correct and resubmit for valuation.

In order to complete this task, we will:

- Discuss the data collection procedures with the appropriate District personnel,
- Provide a spreadsheet that you will populate with plan and census information, and
- Review plan provisions and research any alternative plans that may exist.

For financial reporting purposes under GASB 75, a full actuarial valuation is required at least biennially for OPEB plans. In years one and three a full actuarial valuation is completed to determine the OPEB costs and liabilities, and in years two and four the costs and liabilities are generated by utilizing the prior year demographic information and adjusting for changes in the economic environment. Collecting and analyzing claims and participant census data will occur every other year, unless there are significant changes in the plan or covered population. A new full valuation should be performed if, since the previous full valuation, there has been a change in the accounting standard, significant changes in benefit provisions, significant changes in the size or composition of the population covered by the plan, or other factors that impact long-term assumptions.

Determination of Actuarial Assumptions

The selection of actuarial assumptions will be guided by applicable actuarial standards. This involves an analysis of the actuarial assumptions (both economic and non-economic). The final assumptions are selected by the District, and we will perform a review and provide information which will enable you to select the appropriate actuarial assumptions as required under the GASB standards.

We will:

- Analyze plan claims experience, to the extent that credible experience data are available, and the underlying cause of any recent premium rate fluctuations, if necessary,
- As appropriate, provide a range of reasonable assumptions to be used in calculating the OPEB liabilities,
- Increase your understanding of the assumptions used in the actuarial valuation,
- Discuss the assumptions with you and your members personnel to gain an understanding of the various issues impacting the assumptions, and
- Compare those assumptions with the assumptions used by other public organizations.

Actuarial Valuation

This task incorporates the agreed upon actuarial assumptions and various actuarial methods to determine the OPEB costs and liabilities. We will:

- Establish an actuarial model for evaluating benefit liabilities under the substantive plan (the plan as understood by you and plan members), and
- Calculate and measure the present value of projected benefits, normal cost, actuarial accrued liability, actuarial value of assets, etc.

Preparation of GASB Accounting Information

- Calculate the applicable Total and Net OPEB Liabilities, the sources of changes, the applicable fiscal year OPEB Expense, etc., and
- Prepare exhibits for employer financial reporting.

Actuarial Valuation Report and Recommendations

This task involves preparing an actuarial valuation report containing:

- Executive summary of results,
- Exhibits containing information relevant to satisfying disclosure requirements under GASB 75,
- Present value of projected future benefits including split of past, current, and future accruals,
- Reconciliation of actuarial accrued liability with prior valuations,
- Projected OPEB cash flows, including the impact of implicit rate subsidies,
- Summary of census data,
- Summary of actuarial assumptions, and
- Summary of plan provisions.

In addition, we will include telephonic support with the auditor to discuss the report.

Engagement Team

Your lead actuarial consultant for this scope of work will be Brett Schwab, ASA, EA, MAAA. Brett will be involved and oversee all aspects of the work, including review and consultation. His direct telephone number is 312-244-9022.

Delivering the services

Prior to the commencement of work, we will discuss with you and/or management to establish the expected timeframe and deliverables for Services listed above, including management's role and additional resources allocated to the project.

Limitations

Our responsibility under this Statement of Work extends only to Services we expressly agree to provide herein. Our responsibility does not include, for example, studies, detailed research, or analysis not specifically set forth in this Statement of Work. If such items arise or you request additional Services, we will provide you a fee estimate and a new Statement of Work before we invest significant professional time.

Fees and payment terms

Based on our experience, we anticipate that the fees for the requested services as outlined below. Note that if the District determines that a particular service is not needed for a fiscal year, then we will not perform the analysis, and the associated fee will not be invoiced.

The agreement will commence upon signature, and it will not expire unless earlier terminated. We shall each have the right to terminate the contract, in whole or in part, at any time without further obligation to the other by giving written notice to the other party.

Service	Fixed Fee
GASB 75 Valuation for period ending June 30, 2026	$6,250 (full valuation)
GASB 75 Valuation for period ending June 30, 2027	$3,125 (interim valuation)

The above fixed fees are based upon the following assumptions:

- Timely and complete information is received from the District.
- The participant data is provided in a form compatible with Microsoft Excel and in the format requested.
- The scope of the engagement does not expand beyond that described in this proposal.

We will discuss with you circumstances that require us to do additional work which may include, but is not limited to, work to satisfy our obligations under applicable professional standards including additional fact gathering, analysis and preparation of disclosure forms, unforeseen scope changes, and late or incomplete client provided information. If it appears that the stated fee will be exceeded, we will consult with you before continuing with the engagement.

Agreed and accepted

The undersigned hereby agree to the terms and conditions as set forth above.

BURBANK UNIFIED SCHOOL DISTRICT

By: _____ Date: _____

SCHWAB ACTUARIAL SERVICES

_____ Date: June 11, 2026

Brett Schwab, ASA, EA, MAAA
Principal & Lead Actuary

Schwab Actuarial Services
BrettSchwab1@yahoo.com
+1 (312) 244 9022

Burbank Unified School District
Business Services

REPORT TO THE BOARD

TO:	Members of the Board of Education
FROM:	Jason Hasty, Assistant Superintendent of Business Services
PREPARED BY:	Rachel Paghunasan, Director of Nutrition Services
SUBMITTED BY:	Terri, Ramirez-Adams, Senior Administrative Secretary
DATE:	June 25, 2026
SUBJECT:	Approval of Renewal Agreement with EMS LINQ, LLC for LINQ Nutrition Products and Services (Cafeteria Fund)

Background:

The LINQ platform is currently utilized by the Nutrition Services Department to manage key operational functions, including meal program administration, financial tracking, reporting, and compliance activities. The platform has supported efficient workflows and accurate data management, contributing to improved service delivery and operational oversight.

Discussion/Issues:

Continued access to the LINQ platform is essential to maintain uninterrupted Nutrition Services operations and compliance with program requirements.

The renewal agreement with EMS LINQ, LLC provides continued access to LINQ Nutrition products and services, including point of service, central kitchen, Nutrition Back of House Plus, Nutrition Front of House, production records, inventory, student management, eligibility and reporting, and related services for the 2026-2027 renewal term.

Fiscal Impact:

The total cost of the renewal agreement is not to exceed $38,360.00 for the period of August 1, 2026 through July 31, 2027, and will be funded by the Cafeteria Fund — Fund 13.

Account String: 13.0-53100.0-00000-37000-5840-7490000

Recommendation:

Jason Hasty, Assistant Superintendent of Business Services, recommends that the Board of Education approve the renewal agreement between Burbank Unified School District and EMS LINQ, LLC for LINQ Nutrition products and services for the period of August 1, 2026 through July 31, 2027, not to exceed $38,360.00 (13.0-53100.0-00000-37000-5840-7490000, Cafeteria Fund), and that authority to sign the agreement be exercised pursuant to BUSD – AR 3314, as presented.

EMS LINQ, LLC

Empowering the Business of K-12

2801 Via Fortuna, Suite 400
Austin, TX 78746

Phone: (888) 464-5467
Fax: (737) 358-9282
Email: jcline@linq.com

Quote #: Q-160022-1
Start Date: 8/1/2026
End Date: 7/31/2027
Expires On: 7/30/2026

Customer Contact
Rachel Paghunasan
8187294539
rachelpaghunasan@burbankusd.org

Bill To
Burbank Unified School District
1900 W Olive Ave
Burbank, California 91506

Superintendent:

SALESPERSON	EMAIL	SERVICE PERIOD	PAYMENT METHOD
Jessica Cline	jcline@linq.com	12 months	Net 30

Terms & Conditions

QTY	PRODUCT	NET PRICE	EXTENDED
22.00	Point of Service Add on Med	$247.50	$5,445.00
2.00	Central Kitchen	$875.00	$1,750.00
17.00	Nutrition Back of House Plus - Annual Subscription	$500.00	$8,500.00
1.00	Menu Planning	Included	$0.00
17.00	Production Records	Included	$0.00
17.00	Inventory	Included	$0.00
1.00	Purchasing	Included	$0.00
17.00	Nutrition Front of House - Annual Subscription	$995.00	$16,915.00
34.00	Point of Service Included in Bundle	Included	$0.00
17.00	Student Management, Eligibility & Reporting	Included	$0.00
25.00	School Nutrition Temperature Probe	$230.00	$5,750.00
		Subtotal:	$38,360.00

Tax:	$0.00
Shipping:	
Grand Total:	$38,360.00

EMS LINQ, LLC all rights reserved
Q-160022

1275

- The Order Form term will renew for subsequent 12 month terms (each a "Renewal Term"), unless either party gives the other written notice of non-renewal at least 30 days before the end of the current term.
- For subsequent years within the term bound by the Start Date and End Date detailed on this quote, LINQ is entitled to increase the fees specified in the Order Form to the then-current subscription fees for the LINQ Products, as set forth in the LINQ price list in effect as of such date.
- Any applicable state sales tax has not been added to this quote. Subscription Start and expiration Dates shall be as set forth above, which may be delayed based upon the date that LINQ receives your purchase order.
- In the event that this quote includes promotional pricing, such promotional pricing may not be valid for the entire period stated on this quote.
- Ground shipping or most reasonable shipping costs will be added to the invoice after shipment for all Hardware orders.
- You will be required to pay LINQ for travel expenses (lodging, meals, transportation, and other related expenses) incurred in the performance of Professional and Support Services.
- All invoices shall be paid within thirty (30) days of the date of invoice.
- All purchase orders must contain the exact quote number stated within. Customer agrees that purchase orders are for administrative purposes only and shall not impact the terms or conditions reflected in this quote and the applicable LINQ Master Subscription Agreement.
- This quote is subject to and incorporates the terms and conditions of the LINQ Master Subscription Agreement found at https://www.linq.com/legal-msa
- The parties below acknowledge that they have read the agreement, understand it and agree to be bound by its terms.

Customer: Burbank Unified School District

Signature:

Name:

Business Title:

Authority Level:

Date:

EMS LINQ, LLC all rights reserved
Q-160022

Burbank Unified School District
Business Services

REPORT TO THE BOARD

TO:	Members of the Board of Education
FROM:	Jason Hasty, Assistant Superintendent of Business Services
PREPARED BY:	Rachel Paghunasan, Director of Food Services
SUBMITTED BY:	Terri Ramirez Adams, Senior Administrative Secretary
DATE:	June 25, 2026
SUBJECT:	Approval of Agreement for Use of Equipment and Related Equipment Purchases with Oliver Packaging and Equipment Company (Cafeteria Fund)

Background:

Food Services is establishing heat seal meal production lines to package individually sealed student meals. Oliver Packaging and Equipment Company provides heat seal machines under an Equipment Agreement, and related companion equipment is needed to complete the production lines.

The Agreement for Use of Equipment provides for the use of two (2) Model 1808 Heat Seal Machines, including tray carriers, for use at John Burroughs High School. Under the agreement, the equipment use fee is $0, with a one-time shipping and handling charge of $2,000. The agreement also requires the District to purchase tray and film consumables from Oliver at an annual volume of 792,000 trays, which equates to approximately 2,200 trays per sealer during a 180-day school year.

Discussion/Issues:

The agreement and purchases work together as a single production system. Trays are sealed on the Model 1808 machines, labeled in line by the Model 2318 label printer applicator, and collected on the Model 2218 accumulator tables for casing.

Equipment Agreement, two Model 1808 Heat Seal Machines. Oliver provides the machines, including the tray carriers for each, at John Burroughs High School. In exchange, the District purchases its tray and film consumables from Oliver at an annual volume of 792,000 trays, approximately 2,200 trays per sealer during a 180-day school year.

- No rental fee. The equipment use fee is $0, with a one-time shipping and handling charge of $2,000.
- Oliver delivers and sets up the machines, trains staff, and repairs or replaces the equipment at its own expense under normal use.
- Heat-sealed trays give each meal a tamper-evident film lid, which improves food safety, extends holding times, and protects meal quality in transport between sites. Sealed meals also enable grab-and-go service and allow the department to increase daily meal production with existing staffing.

Rotary Tray Accumulators, two Model 2218. A 36 inch rotating accumulation table at the end of each line collects sealed trays as they come off the sealer. The District can expect the following gains:

- Removes the end-of-line bottleneck. Trays collect on the rotating table instead of requiring a staff member to stand and catch them, so a single operator can run the sealer and case finished trays at their own pace.
- Keeps production moving. The table buffers output during brief interruptions, so the sealer does not have to stop while trays are cased.
- Fits the existing line. Each unit plugs into a standard 115 volt outlet and rolls on lockable casters. Per the vendor quote dated June 11, 2026, pricing is valid through June 28, 2026.

Label Printer Applicator System, Model 2318. An integrated thermal transfer printer, label applicator, and tray conveyor that prints 300 dpi oven-safe labels and applies them directly to the film lid of each sealed tray as it moves down the line. The District can expect the following gains:

- Satisfies state requirements for product identification with easy to read labels showing menu, nutritional content, packaged on and consume by dates, and bar codes.
- Improves food safety through accurate, automated date marking on every tray, replacing hand-labeling and the errors that come with it.
- Frees staff time. Labels are printed and applied at line speed, so employees previously hand-labeling trays can support production instead, with consistent label placement and bar codes that enable inventory and production tracking.

Fiscal Impact:

This item will have no fiscal impact to the General Fund. Fund 13 (Cafeteria Fund) will support the cost of the Agreement for Use of Equipment and related equipment purchases in an amount not to exceed $52,000.

The amount includes the following:

- Equipment use fee for two Model 1808 Heat Seal Machines - $0
- One-time shipping and handling on the heat seal machines - $2,000
- Two (2) Rotary Tray Accumulators at $4,340 each, plus $500 freight - $9,180
- Label Printer Applicator System (Model 2318) at $34,130, plus $1,500.00 freight - $35,630
- Tray and film consumables purchased from Oliver at the 792,000 tray annual volume, a packaging supply cost the department already incurs in normal operations

The not-to-exceed amount will be paid from Fund 13 using the following account strings:

- 13.0 53100.0 00000 37000 4410 7490000 - Not to exceed $12,500
- 13.0 53100.0 00000 37000 6410 7490000 - Not to exceed $39,500

Tray and film consumables will continue to be purchased from Fund 13 as part of normal Food Services operations.

Recommendation:

Jason Hasty, Assistant Superintendent of Business Services, recommends that the Board of Education approve the Agreement for Use of Equipment between Burbank Unified School District and Oliver Packaging and Equipment Company and approve the related equipment purchases, effective June 26, 2026, not to exceed $52,000, (13.0 53100.0 00000 37000 4410 7490000 - $12,500, and 13.0 53100.0 00000 37000 6410 7490000 - $39,500, Cafeteria Fund), and that authority to sign the agreement be exercised pursuant to BUSD – AR 3314, as presented.

OLIVER EQUIPMENT AGREEMENT

Oliver Packaging and Equipment Company ("Oliver"), innovators in meal packaging systems, is pleased to enter into this Equipment Agreement (the "Agreement") with:

Burbank Unified School District ("Customer") with an address at
(Customer Name)

John Burroughs High School, 1920 West Clark Avenue, Burbank, CA 91506
(Customer Address)

for the use of the following equipment (the "Equipment") by Customer:

Equipment:
- [ ] 1308 Heat Seal Machine
- [2] 1808 Heat Seal Machine
- [ ] 1908 Heat Seal Machine
- [ ] ADTP2 Tabletop Labeler

subject to the terms and conditions specified below and on the attached Schedule A ("Customer Responsibilities and Acknowledgments"):

Consumable:	Annual Volume:	Rental Fee:	Shipping/Handling
Trays/Film	792,000 Trays	$0	$2,000

Comments: To include the 1808-25619 Carriers for the 1st 1808 and the 1808-25545 Carriers for the 2nd 1808.
Annual tray volume equates to 2,200 trays per sealer during a 180 day school year.

To the extent that Oliver permits Customer to use additional pieces of equipment at a later date, such equipment (as detailed on future invoices delivered by Oliver to Customer) shall be deemed "Equipment" for all purposes under this Agreement and subject to the terms and conditions hereof.

In consideration of the mutual covenants and promises contained herein and on the following pages, Oliver and Customer hereby agree, intending to be legally bound, to the terms and conditions described herein and on the attached Schedule A.

OLIVER PACKAGING AND EQUIPMENT COMPANY

Signature: _____

Name: Amy Delp

Title: Vice President of Customer Care

Date: _____

Customer: _____

Signature: _____

Name: _____

Title: _____

Date: _____

SCHEDULE A

"TERMS AND CONDITIONS"

Customer's responsibilities:

- As consideration for Customer's use of the Equipment as described herein, Customer agrees to purchase from Oliver the minimum volumes of consumable product ("Consumable Product") specified on the first page of this Agreement. In the event that Customer does not meet such minimum purchase requirement Customer must pay to Oliver a one-time use fee in the amount specified on the first page of this Agreement.

- Customer agrees (a) to purchase all Consumable Product for use with the Equipment from Oliver, and (b) that Customer will not use any packaging materials or products with or on the Equipment other than Consumable Product purchased from or supplied by Oliver.

- Customer agrees to pay inbound shipping charges and customs, duties, taxes, and fees (where applicable) on Consumable Product. Notwithstanding the foregoing, Oliver would pay shipping charges if the quantity ordered in any purchase order is more than 8 cases.

- Customer agrees to pay inbound shipping and handling charge on the Equipment as specified on the first page of this Agreement.

- Customer agrees to complete a credit application (subject to approval by Oliver).

- Customer agrees to immediately notify Oliver if the Equipment does not operate according to the specifications provided to Customer or if the Equipment is damaged or destroyed. Such notification may be made by calling 1-800-253-3893 24 hours per day, 7 days per week.

- Customer agrees to obtain and continuously maintain property insurance and comprehensive liability insurance covering the Equipment and providing for the full replacement cost of same, to name Oliver as a loss payee on such property insurance and as an additional insured on such liability insurance, and to provide proof of such insurance to Oliver. Such insurance shall provide that no modification or cancellation thereof shall be effective as to Oliver without 30 days prior written notice to Oliver.

- Customer shall pay all applicable personal property taxes on the Equipment as determined by the taxing authority for the jurisdiction in which the Equipment is located.

- Customer shall use the Equipment only in the manner for which it was designed and intended, to subject it only to ordinary wear and tear and not jeopardize the integrity of the Equipment and Customer shall always utilize all safety features of the Equipment. Customer shall maintain the Equipment in good repair, condition and working order, including regularly following the maintenance steps listed in the manual and maintenance checklist for the Equipment and complying with Oliver's requirements and recommendations relating to the Equipment. Customer shall use the Equipment lawfully and comply with all laws relating to its possession, use or maintenance. Customer shall not make any alterations, modifications, additions, or improvements to the Equipment or attach anything to the Equipment, in each case, without obtaining Oliver's prior written consent. Customer shall be responsible for all costs and expenses arising out of Customer's misuse or abuse of the Equipment or any unauthorized modifications or repairs to the Equipment. All repairs, replacements and substitutions to the Equipment are the property of Oliver. Oliver shall have the right to inspect the Equipment upon reasonable advance notice to Customer. Customer agrees that only Customer's employees who are trained on the Equipment shall operate the Equipment, and that the Equipment shall only be operated in accordance with the instructions in the manual.

- Customer will not remove the Equipment from the address specified above unless granted written permission from Oliver.

- If Oliver supplies the Customer with a plate or other marking stating that the Equipment is owned by Oliver, Customer agrees to affix and keep the plates or other markings in a prominent and visible place on the Equipment.

- Customer will not cause any lien or encumbrance to be placed on the Equipment.

- Customer agrees that upon expiration or earlier termination of this Agreement, Customer shall promptly return the Equipment to Oliver in good repair, condition and working order, ordinary wear and tear from proper use excepted, by delivering the Equipment to such location as Oliver shall specify.

Customer's responsibilities cont.:

- Customer agrees to indemnify Oliver and its officers, directors, shareholders, agents, and employees against, and will hold those persons harmless from, any and all claims, actions, suits, proceedings, costs, expenses, damages, and liabilities, including attorneys' fees, arising out of, connected with, or resulting from Customer's use of the Equipment, including, without limitation, the possession, use, operation, or return of the Equipment or Oliver's exercise of its rights and remedies under this Agreement and applicable law. Customer's obligations under this paragraph shall survive any expiration or termination of this Agreement, to the extent permitted by law.

Oliver responsibilities:

- Oliver will make the Equipment available to Customer for use exclusively with Oliver-supplied Consumable Products.
- Oliver shall repair any damage or defect in the Equipment at Oliver's expense to the extent such damage or defect is not a result of Customer's use of the Equipment in a manner inconsistent with this Agreement.
- Oliver shall set up and train Customer's staff on the use of the Equipment and shall provide a manual and maintenance checklist for the Equipment.
- Oliver shall, at its sole option, either complete periodic maintenance on the Equipment at its cost, provide replacement parts to Customer, or replace the Equipment.
- Customer shall acknowledge, for verification and tracking purposes, the model and serial number of the Equipment on each invoice statement. For each piece of Equipment listed on that document, Customer agrees to abide by the responsibilities listed above and will immediately notify Oliver of any discrepancies in such Equipment information.

Acknowledgements:

- CUSTOMER ACKNOWLEDGES THAT THE EQUIPMENT IS BEING PROVIDED TO CUSTOMER AS IS, AND THAT OLIVER DISCLAIMS ALL WARRANTIES, WHETHER EXPRESSED OR IMPLIED, INCLUDING, BUT NOT LIMITED TO, ANY WARRANTY OF MERCHANTABILITY OR FITNESS FOR A PARTICULAR USE. NOTWITHSTANDING ANYTHING SET FORTH IN THIS AGREEMENT TO THE CONTRARY, OLIVER SHALL NOT BE LIABLE FOR ANY CONSEQUENTIAL OR SPECIAL DAMAGES, INCLUDING BUT NOT LIMITED TO LOST PROFITS, W ITH RESPECT TO CUSTOMER'S USE OF THE EQUIPMENT OR THIS AGREEMENT.
- Customer acknowledges that the Equipment is, and shall always be and remain, the sole and exclusive property of Oliver, and title in the Equipment remains in the name of Oliver, and that nothing herein grants to Customer an ownership interest in the Equipment. Customer hereby grants Oliver a security interest in the Equipment and agree that Oliver may file any UCC financing statement it deems appropriate to notify third parties of Oliver's ownership of the Equipment. Customer shall execute and deliver to Oliver, upon Oliver's request, such other instruments and assurances as Oliver deems necessary or advisable for the confirmation or perfection of this Agreement and Oliver's rights under this lease, including, without limitation, the filing or recording of financing statements. Customer hereby appoints Oliver as Customer's attorney in fact to take those actions that Oliver deems to be necessary or advisable to perfect or continue Oliver's interests in the Equipment and this Agreement. The Equipment is and shall remain personal property and shall not become a fixture or otherwise part of, or attached to, any real estate at any time. Oliver shall have the right, from time to time during reasonable business hours, to enter the Customer's premises or elsewhere for the purposes of confirming the existence, condition, and the proper maintenance of the Equipment.
- Upon the occurrence of any default of Customer's obligations hereunder, Oliver shall have all the rights and remedies provided by applicable law and by this Agreement. Notwithstanding that title to the Equipment is always in Oliver, Oliver may nevertheless at its option elect to exercise those rights and remedies of a secured party under the Uniform Commercial Code. In addition, Oliver, at its option, may: (a) declare all unpaid payments and other sums due and to become due hereunder immediately due and payable; (b) proceed by appropriate court action or actions or other proceedings either at law or in equity to enforce performance by Customer of any and all covenants of this Agreement and to recover damages for the breach thereof; (c) demand that Customer deliver the Equipment immediately to Oliver at Customer's expense at such place as Oliver may designate; and (d) without notice, liability or legal process, enter by itself and/or its agents into any premises of or under control or jurisdiction of Customer or any of Customer's agents where the Equipment may be or is believed to be, and repossess all or any item thereof, disconnecting and separating all thereof from any other property and using all force necessary or permitted by applicable law to do so. Customer hereby expressly waives all further rights to possession of the Equipment and all claims for injuries suffered through or loss caused by such repossession.
- Customer acknowledges that risk of loss with respect to the Equipment remains with Customer until the Equipment is returned to Oliver in accordance with the terms hereof.

Termination:

- This Agreement will continue until the earliest to occur of the following: (1) Customer's failure to purchase the minimum amount of Consumable Product within a particular quarter or calendar year (unless Customer has paid the use fee set forth on the first page of this Agreement); (2) Customer's decision to discontinue using the Equipment; (3) Customer's purchase of Consumable Product from any person other than Oliver; (4) Customer (i) becomes insolvent or unable to pay Customer's debts when they become due, (ii) commence any action or proceeding under any bankruptcy or insolvency law for the reorganization, arrangement, composition or similar relief, (iii) have any action or proceeding commenced against Customer under any bankruptcy or insolvency law that remains undismissed or unstayed for a period of sixty (60) days, or (iv) make an assignment for the benefit of creditors or go into liquidation or receivership, or otherwise lose legal control of Customer's business, or (5) Customer's breach of any other provision of this Agreement which is not cured within seven (7) days from notice by Oliver to Customer of such breach; or Oliver notifies Customer of the termination of this Agreement. Oliver shall have no obligation to purchase unused Consumable Product from Customer, and all costs associated with returning the Equipment to Oliver shall be paid by Customer.

Miscellaneous:

- All shipments of the Equipment, and Consumable Product, and the terms of sale for all products purchased by Customer from Oliver in connection with Customer's use of the Equipment, are subject to Oliver's Standard Terms and Conditions of Sale provided on invoices.

- This Agreement is governed by the laws of the State of Michigan without regard to conflict of laws principles. The parties agree that any dispute regarding this Agreement shall be brought in a court whose jurisdiction includes Kent County, Michigan, and the parties' consent to the jurisdiction of such court.

- This Agreement contains the entire agreement between the parties concerning its subject matter and supersedes all previous agreements, whether oral or written, between the parties concerning such subject matter. This Agreement may be modified or amended only by a written agreement signed by both parties. The invalidity or unenforceability of any provision of this Agreement shall not affect its other provisions, and this Agreement shall be construed in all respects as if such invalid or unenforceable provision or provisions were omitted. The rights and remedies of the parties under this Agreement are cumulative and are in addition to any other rights or remedies available at law or in equity. This Agreement is binding upon and inures to the benefit of Customer and Oliver and their respective successors and permitted assigns. Customer may not assign this Agreement without Oliver' s prior written consent. No waiver of any term of this Agreement will be valid unless signed by the party giving the waiver (and then only to the extent the writing specifies). The parties do not intend to confer any legal or contractual right or benefits upon any person or entity who is not a party to this Agreement. This Agreement may be executed in one or more counterparts, each of which shall be deemed an original but all of which together will constitute one and the same instrument.

Quote

06/18/2026

To:
Burbank USD
1900 W Olive Ave
Burbank, CA 91506
United States

Project:

From:
Oliver Packaging & Equipment Company
Mark Kreiss
3236 Wilson Dr NW
Walker, MI 49534
United States

Item	Qty	Product	Description	Price	Sell Total
1	1.00	2318-9999-001	Printer-Label Applicator With Conveyor	$34,130.00	$34,130.00

Sale Amount:	$34,130.00
Order Disc(- %):	$0.00
Freight:	1,500.00
Surcharge:	N/A
Sales Tax:	$0.00
Misc Charges:	0.00
Total Amount:	$35,630.00

Terms & Conditions: https://www.oliverquality.com/terms-conditions/

Pricing good thru 07/30/2026

Acceptance: _____ Date: _____

Printed Name: _____

Project Grand Total: $35,630.00

OLIVER™
Serving What Matters

Model 2218

Rotary Accumulator

Specifications

Machine Dimensions

- 36" W x 26" L x 33.5" H

Electrics

- 115 VAC, 1 AMPS, 60 Hz, 1 phase

Weight

- Net: 98 lbs. (approximately)
- Shipping: 175 lbs. (approximately)

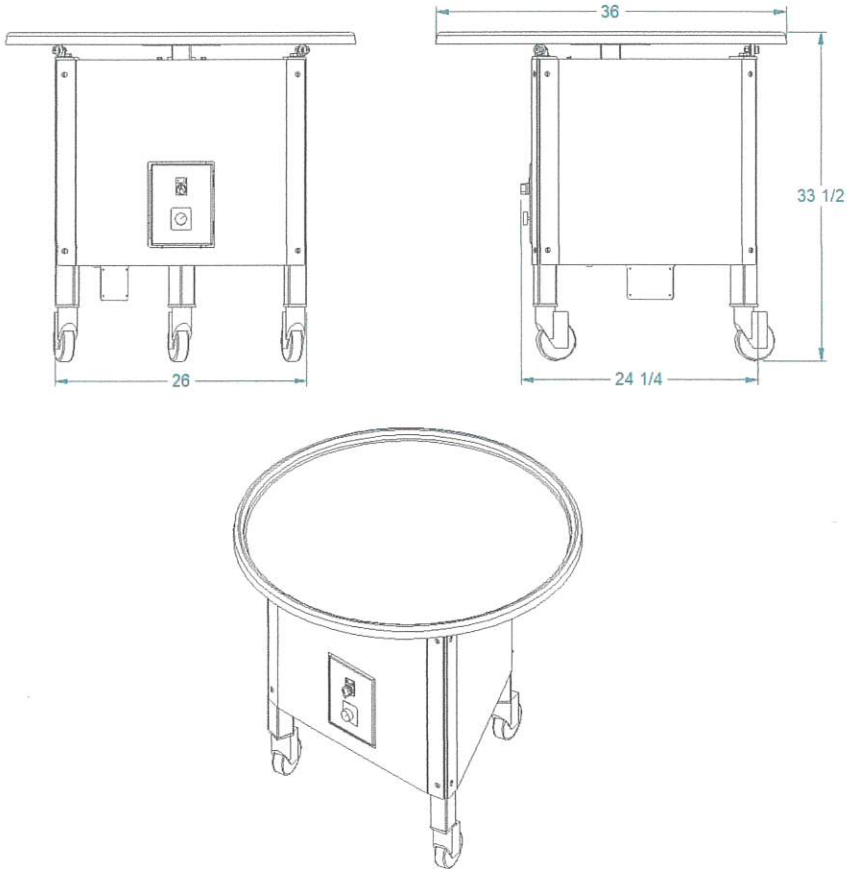

3236 Wilson Drive NW, Walker, MI 49534
800-253-3893 | www.oliverquality.com

Made in the USA

rev33023

OLIVER®
Helping People Feed People

Model 1808

Speedseal® MX

Features

- Rotary heat seal
- Continuous motion of the conveying system
- Seal up to 27 packages/minute
- Adjustable discharge shelf with Lexan® safety guard
- Constructed of easy-to-clean stainless steel and aluminum
- Removable tray carriers constructed of aluminum
- For use in ambient temperature (50°F or above)
- Lockable casters



Benefits

- Adjustable speed reduces food splash
- Simple to operate; easy to cross-train employees
- Factory-set heat roller temperature creates optimal seals
- Easy roll in and out for production line flexibility
- Supported by a nationwide service organization

Made in the USA

3236 Wilson Drive NW, Walker, MI 49534
800-253-3893 | www.oliverquality.com

OLIVER®
Helping People Feed People

Model 1808

Speedseal® MX

Specifications

Maximum Tray Capacity

- 8.7” W x 10” L x 3.25” D
- Tray sealing lengths range from 3.5” to 10”, in 1/2” increments

Heat Seal Temperature Range

- Factory set to approximately 350°F

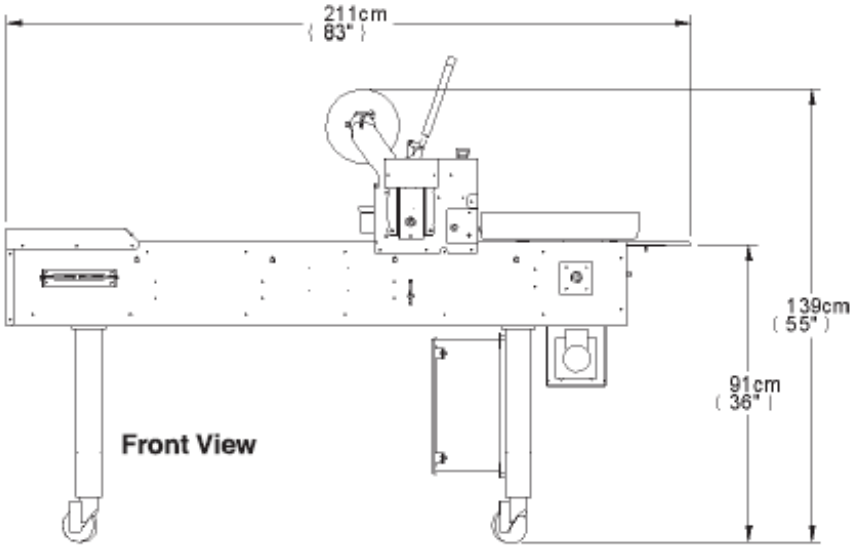

Machine Dimensions

- 27” W x 83” L x 56” H
- Infeed length approximately 28”
- Maximum film roll diameter 9”

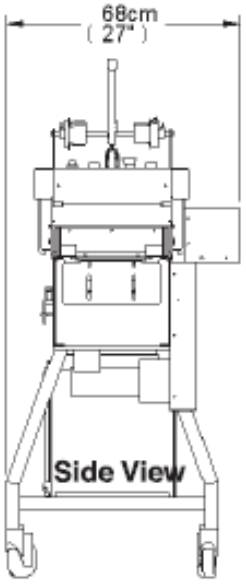

Electric Options

- 120 VAC, 13 Amps, 60Hz, 1 Phase
- 200-240 VAC, 10 AMPS, 50-60 Hz, 1 phase

Weight

- Net: 340 lbs.
- Shipping: 450 lbs.

3236 Wilson Drive NW, Walker, MI 49534
800-253-3893 | www.oliverquality.com

Made in the USA

Above specifications subject to change without notice.
The information contained herein is correct as of the date hereof.

020124

OLIVER®
Helping People Feed People

Model 2318

Label Printer Applicator System

Integrated thermal transfer printer, applicator, tray conveyor with stand. Print 300 dpi one color oven-safe labels precisely applied to top film lid of trays. Print information such as menu, nutritional content, packaged on, consume by dates and even bar codes.

Features

- One color printer with 4” wide print head
- Clarisuite™ software license
- Software compatible with label design software which supports Zebra or Sato print engines
- Uses industry standard labels
- Label content database capacity of 400 MB
- USB port for label upload and backup/restore
- Supports 20 different languages
- Touch screen operator panel with video tutorials for set up, consumables loading, troubleshooting and print-head replacement
- Adjustable stand (height) and conveyor (speed and tray guide rails), with lockable casters
- System set up for left or right side mount on conveyor, dependent on space, location, preference within production space



Integrated stand/conveyor/ label printer applicator

Benefits

- Precise placement of labels for consistent product presentation
- Enhance meal presentation with product labeling for improved consumer experience
- Satisfy state requirements for product identification with easy to read labels
- Minimal setup steps—conveyor guides and printer/applicator head distance to tray—make integration into meal production simple and quick
- Easily roll in and out for production line flexibility
- Supported by a nationwide service organization
- One-year warranty from date of installation

3236 Wilson Drive NW, Walker, MI 49534
800-253-3893 | www.oliverquality.com

Made in the USA

Above specifications subject to change without notice.
The information contained herein is correct as of the date hereof.

OLIVER®
Helping People Feed People

Model 2318

Label Printer Applicator System

Specifications

System Dimensions

- 49.03” W x 49.74” L

Electrics

- 115 VAC

Label Size Options

(one roll included with system purchase)

- 3” x 4” - 8,800/roll
- 3” x 5” - 7,000/roll
- 4”x 4” - 8,800/roll
- 4” x 6” - 5,800/roll

Ribbon Size

(one roll included with system purchase)

- 4” wide

Shipping Weight

- Labeler - 165 lbs
- Integrated stand/conveyor - 575 lbs

Integrated stand/conveyor shipping pallet dimensions - 66” L x 48” W x 68” H

Labeler/printer/applicator shipping pallet dimensions - 30” L X 35” W X 40” H

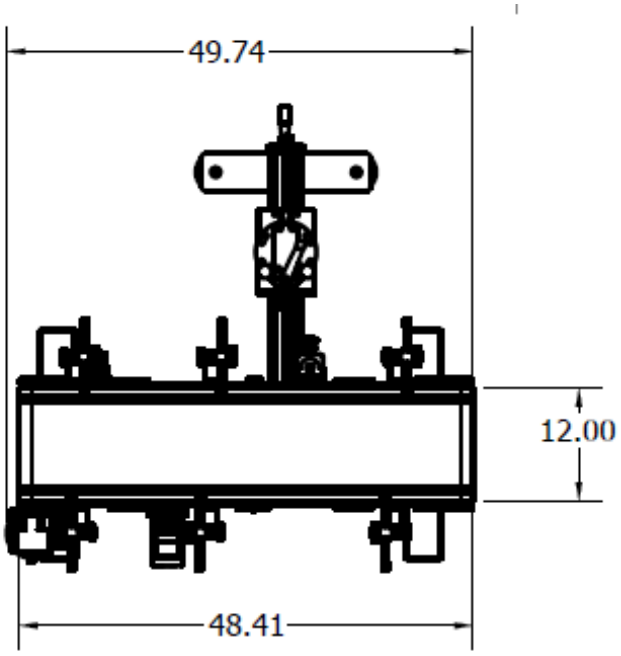

Top view

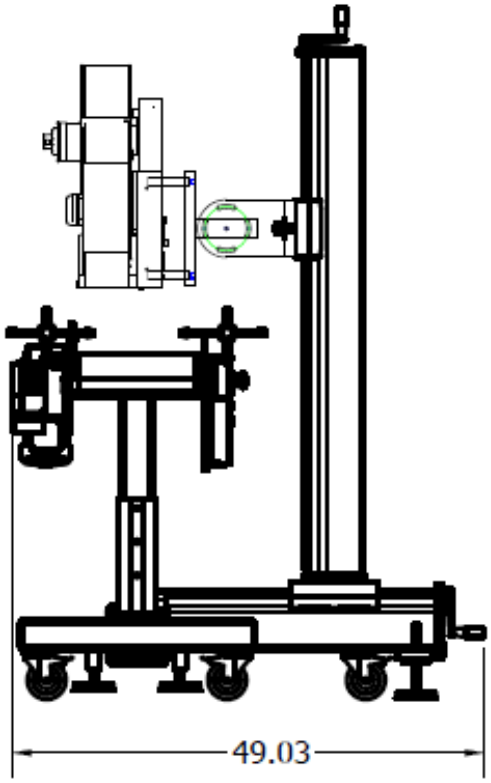

Side view

Made in the USA

3236 Wilson Drive NW, Walker, MI 49534
800-253-3893 | www.oliverquality.com

Above specifications subject to change without notice.
The information contained herein is correct as of the date hereof.

080524

OLIVER®
Helping People Feed People

Model 2318

Label Printer Applicator System

System Dimensions with Oliver Model MX Model 1808



MX Model 1808 with Label Printer Applicator System

Overall length: 10’, 9.75”

Width of stand: 4’, 1.5”



MX Model 1808 with Label Printer Applicator System and Accumulator Table

Overall length: 13’, 10”

Width front of accumulator to back of stand: 4’, 5.75”

3236 Wilson Drive NW, Walker, MI 49534
800-253-3893 | www.oliverquality.com

Made in the USA

Above specifications subject to change without notice.
The information contained herein is correct as of the date hereof.

020124

OLIVER®
Helping People Feed People

Model 2318

Label Printer Applicator System

System Dimensions with Oliver Models MX-2 Model 1908

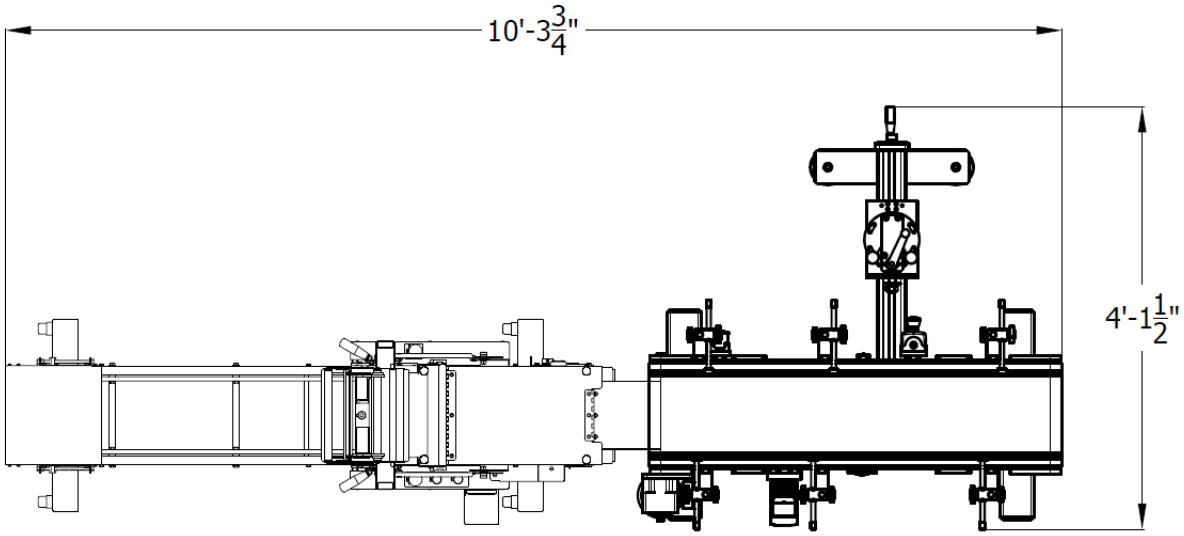

MX-2 Model 1908 with Label Printer Applicator System

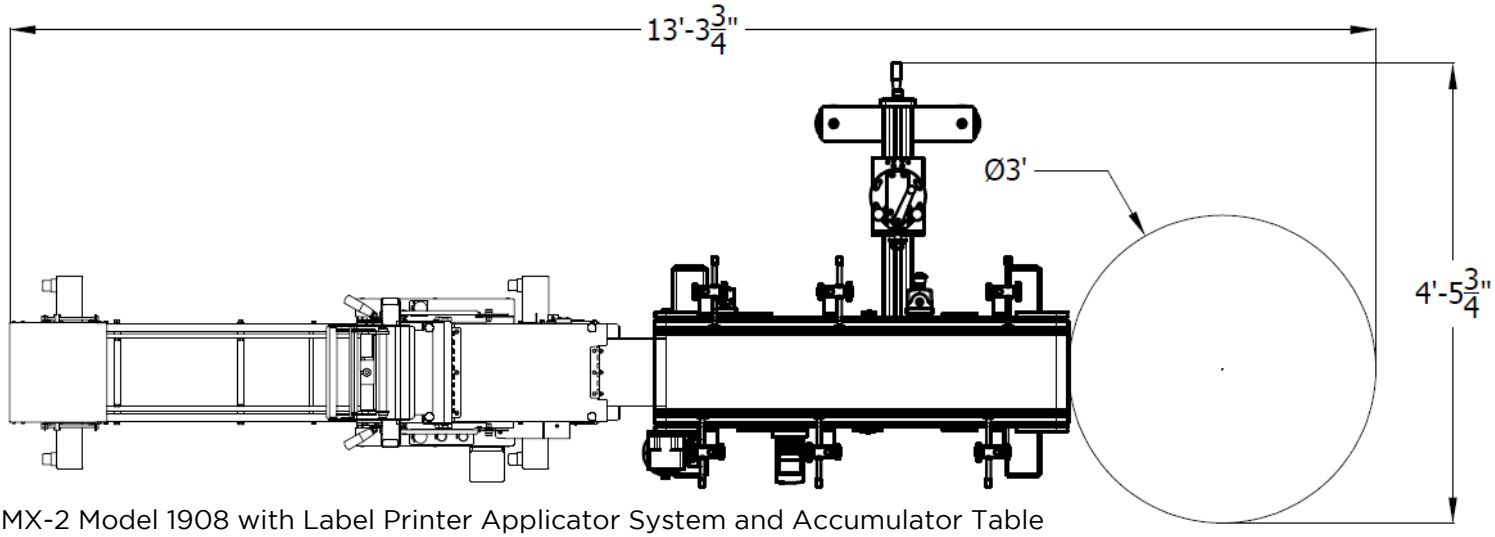

MX-2 Model 1908 with Label Printer Applicator System and Accumulator Table

3236 Wilson Drive NW, Walker, MI 49534
800-253-3893 | www.oliverquality.com

Made in the USA

Above specifications subject to change without notice.
The information contained herein is correct as of the date hereof.

020124

Burbank Unified School District
Business Services

REPORT TO THE BOARD

TO:	Members of the Board of Education
FROM:	Jason Hasty, Assistant Superintendent of Business Services
PREPARED BY:	Rachel Paghunasan, Director of Food Services
SUBMITTED BY:	Terri, Ramirez Adams, Senior Administrative Secretary
DATE:	June 25,2026
SUBJECT:	Approval of Renewal Agreement with LunchAssist, Inc. for Professional Services and Training (Cafeteria Fund)

Background:

LunchAssist is a professional support platform designed to assist school nutrition departments with training, compliance support, professional standards tracking, resources, and consulting services.

The Food Services Department utilizes LunchAssist to support staff training, regulatory compliance, professional development, and operational planning related to school nutrition services.

Discussion/Issues:

The Burbank Unified School District Food Services Department continues to use LunchAssist resources and consulting support to assist with school nutrition operations, staff training, compliance preparation, and program improvement.

The renewal includes consulting and training support, LunchAssist PRO renewal, and District-wide LunchAssist PRO access for Food Services team members. These services provide one-on-one consulting, mentoring, coaching, support, school nutrition training, professional standards tracking, resources, and reports.

The renewal period is October 28, 2026 through June 30, 2027, prorated for eight months, with renewal scheduled for July 1, 2027.

Fiscal Impact:

The total cost of the renewal agreement is not to exceed $20,635.00 and will be funded by the Cafeteria Fund — Fund 13.

The renewal includes:

- Consulting and Training: $17,500.00
- LunchAssist PRO Renewal: $330.00
- District-wide LunchAssist PRO: $2,805.00

Total: $20,635.00

Account String: 13.0-53100.0-00000-37000-5850-7490000

Recommendation:

Jason Hasty, Assistant Superintendent of Business Services, recommends that the Board of Education approve the renewal agreement between Burbank Unified School District and LunchAssist, Inc. for professional services, training, and LunchAssist PRO access, effective October 28, 2026 through June 30, 2027, not to exceed $20,635.00 (13.0-53100.0-00000-37000-5850-7490000, Cafeteria Fund), and that authority to sign the contract pursuant to BUSD—AR 3314, as presented.



Quote For

Burbank Unified School District

LunchAssist, Inc.
8605 Santa Monica Blvd, 52611
West Hollywood, CA 90069
(985) 966-8494
www.lunchassist.org

Quote

Burbank Unified School District

Bill To

Rachel Paghunasan
1900 West Olive Ave.
Burbank, CA 91506

Quote #	5498981000068509031
Quote Date	May 19, 2026 10:30 AM
Quote Expiration	Jul 31, 2026

Item & Description	List Price	Qty	Amount
Consulting & Training 10/28/26-6/30/27: One-on-one consulting, training, mentoring, coaching, and support from the team at LunchAssist. Prorated 8 months to renew on July 1, 2027	$ 17,500.00	1	$ 17,500.00
LunchAssist PRO Renewal 10/28/26-6/30/27: One year of school nutrition training through LunchAssist PRO. Prorated 8 months to renew on July 1, 2027	$ 330.00	1	$ 330.00
District-wide LunchAssist PRO 10/28/26-6/30/27: School nutrition training, professional standards tracking, resources, and reports for each team member in the school nutrition department through LunchAssist PRO (price per each additional team member). Prorated 8 months to renew on July 1, 2027	$ 33.00	85	$ 2,805.00
Grand Total			**$ 20,635.00**

Terms & Conditions

This agreement is for dates listed. Services will be suspended or canceled for accounts that are left unpaid unless other arrangements have been made. This contract will automatically renew in successive years unless LunchAssist is notified of the intent to cancel at least 90 days prior to the annual renewal date. Renewal invoices will be sent approximately 3 months before the annual renewal date. Fees for subsequent years will be equal to the base year cost, uplifted each year based on inflation.

BURBANK UNIFIED SCHOOL DISTRICT
Business Services

REPORT TO THE BOARD

TO:	Members of the Board of Education
FROM :	Jason Hasty, Assistant Superintendent of Business Services
PREPARED BY:	Valezka Emes, Director of Facilities
SUBMITTED BY:	Megan Burkhart, Facilities, Operations and Construction Technician
DATE:	June 25, 2026
SUBJECT:	Approval of Award of Contract, California Paving & Grading, Patch Existing Playground Asphalt, Thomas Edison Elementary School (Deferred Maintenance)

Background:
The District has pursued a proposal for patching the existing asphalt at Thomas Jefferson Elementary School. This project is being prioritized due to safety concerns regarding major cracks in the pavement, which currently present a tripping hazard for students and staff.

Discussion/Issues:
On May 27, 2026, the District received a proposal from California Paving & Grading to patch asphalt cracks ranging from ½" to 3" wide on the playground.

The scope of work consists of:

- Cleaning and preparation of existing asphalt surfaces.
- Removal of vegetation and root growth along asphalt areas.
- Cold planning of deteriorated asphalt sections.
- Repair of large asphalt cracks and application of crack filler.
- Installation and compaction of new asphalt in designated areas.
- Application of tack coat and seal coat treatment over approximately 55,356 square feet of pavement.
- Re-striping of parking stalls, hatched areas, and game courts to match the existing layout.
- Cutting and rewelding of an existing handrail as required to access grinding areas.

The proposal notes that prevailing wage requirements apply to the work described. The proposal also excludes parking lots from the scope of work.
All work will be completed in a substantial and workmanlike manner according to standard practices.

Fiscal Impact:
$39,555.00 (Deferred Maintenance)

Recommendation:
Jason Hasty, Assistant Superintendent of Business Services, recommends that the Board approve the contract award between the Burbank Unified School District and California Paving & Grading for the patching of existing playground asphalt at Thomas Jefferson Elementary School, not to exceed $39,555.00 (14.0-00000.0-00000-85000-5810-2060000, Deferred Maintenance), effective July 1, 2026 through June 4, 2027, and that authority to sign the agreement be exercised pursuant to BUSD–AR 3314, as presented.

CALIFORNIA
PAVING & GRADING
3253 Verdugo Rd,
Los Angeles, CA 90065
(323) 255-1144 Lic #384051

Proposal & Contract

Date	Proposal #
5/27/2026	260960

Customer Name / Address	Job / Address
Burbank Unified School Dist. 510 S. Sheldon St. Burbank, CA 91506	Thomas Jefferson Elementary 1900 N. 6th St. Burbank, CA 91504 (Revised)

Rep	Terms of Sale	P.O. No.	Job Number
LA	Due on receipt	PO#26003381	260960 - 1900 N. 6th ...

Description	Total
Clean Existing Asphalt Areas to be Paved/Patched/Sealed/Striped Remove Grass Root Vegetation on Existing Asphalt Areas Approx. 9,000 LF. Coldplane Existing Asphalt Areas Totaling Approximately 2,592 Square Ft.,@ 1" Inch Depth Patch Large Cracks 1/2 to 3" Inch Wide Approx. 413 LF. Apply Tack Coat to Existing Asphalt Areas to be Paved Install 1" Inches of Asphalt to Areas Totaling Approximately 3,974 Square Ft. Compact All New Asphalt Material with Machine Roller Apply OverKote Sealer to Areas Totaling Approximately 55,356 Square Ft.,(1 Move), (1 Coat) Stripe as Per Specifications for (3) Stalls, (2) Hatched Areas (22 x 13) & (18 x 6), (15) Game Courts Per Existing Layout Apply Cold Rubberized Crackfill Approx. 9,000 LF. Quotes are Valid for 30 Days All work is to be completed in a substantial and workmanlike manner according to standard practices for the sum of ...	35,050.00
Exclusions: Lower Field Parking Lots NOTE: Not all Cracks can be Filled or Repaired. Cracks and Repairs will be visible at completion of work Note: In Order to Access Grinding Area Existing Handrail Will Need to be Cut & Weld Back After Completing Areas Note: Prevailing Wages Apply to Work Mentioned Above ALT A: Stripe Per Existing Layout Lower Field Additional Price $4,505.00	
California Paving & Grading Co.,Inc. By:Luis Alvarez	

CALIFORNIA
PAVING & GRADING
3253 Verdugo Rd,
Los Angeles, CA 90065
(323) 255-1144 Lic #384051

Proposal & Contract

Date	Proposal #
5/27/2026	260960

Customer Name / Address	Job / Address
Burbank Unified School Dist. 510 S. Sheldon St. Burbank, CA 91506	Thomas Jefferson Elementary 1900 N. 6th St. Burbank, CA 91504 (Revised)

Rep	Terms of Sale	P.O. No.	Job Number
LA	Due on receipt	PO#26003381	260960 - 1900 N. 6th ...

Description	Total
NOTICE TO OWNER (Section 7019 - Contractors License Law) - Under the Mechanics Lien Law (California Code of Civil Procedures, Section 1181 et seq.) any contractor, sub-contractor, laborer, supplier or other person who helps to improve your property but is not paid for his work or supplies, has a right to enforce a claim against your property. This means that, after a court hearing, your property could be sold by a court officer and proceeds of the sale used to satisfy the indebtedness. This can happen even if you have paid your own contractor in full, if the subcontractor, laborer or supplier remains unpaid. Under the law you may protect yourself against such claims by filling, before commencing such work of improvement, an original contract for the work of improvement or a modification thereof, in the office of the county recorder of the county where the property is situated and requiring that a contractor's payment bond be recorded in such office. Said bond shall be in an amount not less than fifty percent (50%) of the contract price and shall, in addition to any conditions for the performance of the contract, be conditioned for the payment in full of the claims of all persons furnishing labor, services, equipment or materials for the work described in said contract. This contract also contains provisions to homeowners as set forth in 1689.7 (a) and details set forth in (b) and (c). Contractors are required by law to be licensed and regulated by the Contractors' State License Board. Any questions concerning a contractor may be referred to the registrar of the board whose address is: Contractors State License Board, 9821 Business Park Drive Sacramento, CA 95827 Information about seal coat: Seal coat is designed to protect asphalt from water erosion and UV oxidation; it also beautifies your parking lot or driveway by giving it a deep black color. misconception customers have is they expect cracks to disappear or for the seal to hide imperfections in the existing asphalts surface. Seal coat WILL NOT hide cracks, depressions, uneven or rough areas. Even if crack filler is applied prior to seal coat, cracks will still be visible after the work is complete, seal coat will not adhere to oil spots on asphalt. No Guarantee is given on seal coat, crackfill, or patching jobs. If you feel your project may require more work than just a seal coat, please contact your estimator so he can make the proper recommendations. not responsible for animal, human, or vehicular tracking of sealcoat. Not responsible for replacement of wet subgrade unless specified, such work can be peformed at additional cost. A or B Permit jobs must be paid in full upon completion, PAYMENT CANNOT BE WITHHELD AWAITING FINAL INSPECTION. CALIFORNIA PAVING & GRADING CO., INC. (CP&G) GENERAL TERMS AND CONDITIONS OF SALE TERMS: Progress payments are expected during duration of job, failure to make payments will stop production, put job at idle.final payment due when work is completed. Any unpaid amount will be subject to 5% interest per month. CP&G shall be entitled to collect attorney fees and court costs in the pursuit for any unpaid balance. All work to be completed with one (1) move unless otherwise stated. Prevailing wages are not included unless otherwise stated. ONLY complete removal and replacement jobs carry one-year guarantee. no guarantee is given on seal coat, patching, or resurface jobs. Proposal is valid for thirty (30) days. CP&G is not responsible for delays caused by weather, scheduling issues, unforseen wet subgrade, public works/permitted jobs and	

CALIFORNIA
PAVING & GRADING
3253 Verdugo Rd,
Los Angeles, CA 90065
(323) 255-1144 Lic #384051

Proposal & Contract

Date	Proposal #
5/27/2026	260960

Customer Name / Address	Job / Address
Burbank Unified School Dist. 510 S. Sheldon St. Burbank, CA 91506	Thomas Jefferson Elementary 1900 N. 6th St. Burbank, CA 91504 (Revised)

Rep	Terms of Sale	P.O. No.	Job Number
LA	Due on receipt	PO#26003381	260960 - 1900 N. 6th ...

Description	Total
A or B permit projects. ADDITIONAL CHARGES: This proposal excludes permits, plans, inspections, testing, surveying, manhole adjusting, gate/traffic loops, utility adjustments or relocations, street striping or signage, rough grading, storm drains, ADA compliance and street lighting. Import and/or export of fill to be charged as extra, if needed. if for any reason additional move is required beyond CP&G control, move in charge will be minimum $650 per occurance. CHANGE ORDERS: All changes to this proposal must be completed by our office in writing and shown as a change order to this proposal. Any change to this proposal will be executed only upon written orders for same, and will become an extra charge over the sum mentioned in this contract. Any change written or typed by the customer on our contract is null and void. DEFINITIONS: Unless otherwise specified, the term grade shall mean that present grades are within one inch of finish sub-grade. Weed killer to be applied only where specified. CP&G accepts no responsibility for future growth of vegetation. Cracks will still be visible at completion of all seal coating jobs, no guarantee against seal coat adhering to oil spots on asphalt. CP&G cannot guarantee that all cracks will be filled and or patched. EXCEPTIONS: CP&G shall not be responsible for cracks in asphalt due to soil or sub-grade movement or failure or on any resurfacing of existing asphalt. No gurantee on resurfacing jobs. CP&G shall not be liable for any damage to or breakage of underground pipes and/or conduits not buried minimum 18" deep or visible from the surface of the ground nor for any damage to approaches (including sidewalk) from the street to the property line. CP&G shall not be responsible for water drainage when resurfacing over existing asphalt and concrete areas. Water drainage subject to existing conditions. CP&G shall not be responsible for cracking of new concrete surface; for graffiti of new concrete; for repair to damage of irrigation lines, sprinkler heads or grass lawns. CP&G can offer no guarantee against power steering marks, especially in hot weather as this is a natural occurrence. CP&G is not liable for sinkage of trenches due to lack of completion by others. CP&G shall not be responsible for any color ordered from a color chart varying from concrete color actually delivered due to the variations in the coloring materials and other factors beyond the control of CP&G. Customer agrees that CP&G shall not be liable for damages associated with any dissatisfaction with the color of concrete delivered or defects caused by a mixture designed and specified by the customer. CP&G is not responsible for any discoloration such as blotching or dark spots on new concrete surfaces Proposals do not include disposal of petromat mixed with asphalt, unless specified in scope of work. pricing subject to increase if petromat is present. ADA compliance must be clearly stated in scope of work. Permit fees cannot be refunded, meaning if you cancel the contract after permit is obtained you are still responsible for reimbursement of fees to CP&G. special order materials cannot be canceled, returned, or refunded. customer responsible if contract canceled	

ACCEPTANCE
You are hereby authorized to proceed with the work as per above and I agree to pay in the amount as stated on this Proposal, including initaled option(s). You the Buyer may cancel this transaction at any time prior to midnight of the third business day after the date of this transaction. All terms and conditions on of attached pages are incorporated herein and made part hereof.

Accepted By:_____ Date:_____

BURBANK UNIFIED SCHOOL DISTRICT
Business Services

REPORT TO THE BOARD

TO:	Members of the Board of Education
FROM:	Jason Hasty, Assistant Superintendent of Business Services
PREPARE BY:	Terri Ramirez-Adams, Senior Administrative Secretary
SUBMITTED BY:	Terri Ramirez-Adams, Senior Administrative Secretary
DATE:	June 25, 2026
SUBJECT:	Approval of Amended Agreement for Professional Services, Lozano Smith, Attorneys at Law, (General, Bond, and Special Education Funds)

Background:

The Burbank Unified School District requires legal advice, support, and direction in areas of specialty such as construction, general, governance, and special education. These services may also include preparation for and representation in court.

The agreement with Lozano Smith, Attorneys at Law, was originally ratified on September 4, 2025, for a total not to exceed amount of $403,000. On April 9, 2026, the Board approved an amendment increasing the agreement by $100,000, for a new total not to exceed $503,000, due to the unexpected cost of ongoing cases.

Discussion/Issues:

Lozano Smith, Attorneys at Law, has provided legal services to the District since 1988 and continues to provide legal counsel on an as-needed basis.

Due to ongoing legal matters and outstanding invoices for services provided during the 2025-2026 fiscal year, additional funding authority is needed through June 30, 2026. This amendment will increase the agreement by $200,000 to ensure sufficient funding authority for outstanding invoices and any remaining legal costs through the end of the fiscal year.

Fiscal Impact:

This amendment increases the agreement by $200,000, for a new total not to exceed $703,000.

The primary payment account will be the General Fund, with costs charged to other funds only when the legal matter is appropriate for that funding source.

Funding may be charged to the following account strings, as applicable:

- 01.0-00000.0-00000-72000-5820-7400000 (General Fund)
- 21.0-00000.0-00000-85000-5820-7400000 (Bond Fund)
- 01.0-65000.0-50010-21000-5820-7440000 (Special Education Fund)

Recommendation:

Jason Hasty Assistant Superintendent of Business Services, approve the amended agreement between the Burbank Unified School District and Lozano Smith, Attorneys at Law, effective July 1, 2025 through June 30, 2026, increasing the not to exceed amount by $200,000, for a new total not to exceed $703,000, to be paid primarily from the General Fund (01.0-00000.0-00000-72000-5820-7400000), with Bond Fund (21.0-00000.0-00000-85000-5820-7400000) and Special Education Fund (01.0-65000.0-50010-21000-5820-7440000) charged when appropriate based on the legal matter, and that authority to sign the agreement be exercised pursuant to BUSD—AR 3314, as presented.

Note: The agreement was originally ratified on September 4, 2025, for a total not to exceed $403,000 and was later amended to increase the total not-to-exceed amount to $503,000. This second amendment provides additional funding authority for outstanding invoices and legal services through June 30, 2026.

LS Lozano Smith
ATTORNEYS AT LAW

AGREEMENT FOR LEGAL SERVICES

THIS AGREEMENT ("Agreement") is effective July 1, 2025 ("Effective Date"), between the BURBANK UNIFIED SCHOOL DISTRICT ("Client") and the law firm of LOZANO SMITH, LLP ("Attorney") (each a "Party" and collectively the "Parties"). Attorney shall provide legal services as requested by Client on the following terms and conditions:

1. ENGAGEMENT. Client hires Attorney on an as-requested basis as its legal counsel with respect to matters the Client refers to Attorney. When Client refers a matter to Attorney, Attorney shall confirm availability and ability to perform legal services regarding the matter. After Attorney has completed services for the specific matter referred by Client, then no continuing attorney-client relationship exists unless Client requests further services and Attorney accepts a new engagement. If Attorney undertakes to provide legal services to represent Client in such matters, Attorney shall keep Client informed of significant developments and respond to Client's inquiries regarding those matters. Client understands that Attorney cannot guarantee any particular results, including the costs and expenses of representation. Client agrees to be forthcoming with Attorney, to cooperate with Attorney in protecting Client's interests, to keep Attorney fully informed of developments material to Attorney's representation of client, and to abide by this Agreement. Client is hereby advised of the right to seek independent legal advice regarding this Agreement.

2. RATES TO BE CHARGED. Client agrees to pay Attorney for services rendered based on the attached rate schedule. Agreements for legal fees on other-than-an-hourly basis may be made by mutual agreement for special projects (including as set forth in future addenda to this Agreement).

3. REIMBURSEMENT. Client agrees to reimburse Attorney for actual and necessary expenses and costs incurred in the course of providing legal services to Client, including but not limited to expert, consultant, mediation, arbitration fees and e-discovery service fees. Attorney shall not be required to advance costs on behalf of Client over the amount of $1,000 unless otherwise agreed to in writing by Attorney. Typical expenses advanced for Client, without prior authorization, include messenger fees, witness fees, expedited delivery charges, travel expenses, court reporter fees and transcript fees. Client authorizes Attorney to retain experts or consultants to perform services necessary to represent Client for a specific matter.

4. MONTHLY INVOICES. Attorney shall send Client a statement for fees and costs incurred every calendar month (the "Statement"). Statements shall set forth the amount, rate and description of services provided. Client shall pay Attorney's Statements within thirty (30) calendar days after receipt. An interest charge of one percent (1%) per month shall be assessed on balances that are more than thirty (30) calendar days past due, not to exceed 10% per annum.

5. COMMUNICATIONS BETWEEN ATTORNEY AND CLIENT. The Parties recognize that all legal advice provided by Attorney is protected by the Attorney-Client and Work Product

Privileges. In addition to regular telephone, mail and other common business communication methods, Client hereby authorizes Attorney to use facsimile transmissions, cellular telephone calls and text, unencrypted email, and other electronic transmissions in communicating with Client. Unless otherwise instructed by Client, any such communications may include confidential information.

6. POTENTIAL AND ACTUAL CONFLICTS OF INTEREST. If Attorney becomes aware of any potential or actual conflict of interest between Client and one or more other clients represented by Attorney, Attorney will comply with applicable laws and rules of professional conduct.

7. INDEPENDENT CONTRACTOR. Attorney is an independent contractor and not an employee of Client.

8. TERMINATION.

a. Termination by Client. Client may discharge Attorney at any time, with or without cause, by written notice to Attorney.

b. Termination by Mutual Consent or by Attorney. Attorney may terminate its services at any time with Client's consent or for good cause. Good cause exists if (a) Client fails to pay Attorney's Statement within sixty (60) calendar days of its date; (b) Client fails to comply with other terms and conditions of this Agreement, including Client's duty to cooperate with Attorney in protecting Client's interests; (c) Client has failed to disclose material facts to Attorney; or (d) any other circumstance exists that requires termination of this engagement under the ethical rules applicable to Attorney. Additionally, to the extent allowed by law, Attorney may decline to provide services on new matters or may terminate the Agreement without cause upon written notice to Client if Attorney is not then providing any legal services to Client. Even if this Agreement is not terminated, under paragraph 1, an attorney-client relationship exists only when Attorney is providing legal services to Client.

c. Following Termination. Upon termination by either Party: (i) Client shall promptly pay all unpaid fees and costs for services provided or costs incurred pursuant to this Agreement up to the date of termination; (ii) unless otherwise required by law or agreed to by the Parties, Attorney will provide no legal services following notice of termination; (iii) Client will cooperate with Attorney in facilitating the orderly transfer of any outstanding matters to new counsel, including promptly signing a substitution of counsel form at Attorney's request; and (iv) Client shall, upon request, be provided the Client's file documents maintained for the Client by Attorney and shall sign acknowledgment of receipt upon delivery of that file. For all Statements received by Client from Attorney prior to the date of termination, Client's failure to notify Attorney in writing of any disagreement with either the services performed or the charges for those services as shown in the Statement within thirty (30) calendar days of the date of termination shall be deemed Client's acceptance of and agreement with the Statement. For any billing appearing for the first time on a Statement received by Client

from Attorney after the date of termination, failure to notify Attorney in writing of any disagreement with either the services performed or the charges for those services within thirty (30) calendar days from receipt of the Statement shall be deemed to signify Client's acceptance of and agreement with the Statement.

9. MAINTENANCE OF INSURANCE. Attorney agrees that, during the term of this Agreement, Attorney shall maintain commercial liability and professional errors and omissions insurance.

10. CONSULTANT SERVICES. Attorney works with professional consultants that provide services, including but not limited to, investigations, public relations, educational consulting, leadership mentoring and development, financial, budgeting, management auditing, board/superintendent/chancellor relations, administrator evaluation and best practices, and intergovernmental relations. Attorney does not share its legal fees with such consultants. Attorney may offer these services to Client upon request.

11. DISPUTE RESOLUTION.

a. Mediation. Except as otherwise set forth in this section, Client and Attorney agree to make a good faith effort to settle any dispute or claim that arises under this Agreement through discussions and negotiations and in compliance with applicable law. In the event of a claim or dispute, either Party may request, in writing to the other Party, to refer the dispute to mediation. This request shall be made within thirty (30) calendar days of the action giving rise to the dispute. Upon receipt of a request for mediation, both Parties shall make a good faith effort to select a mediator and complete the mediation process within sixty (60) calendar days. The mediator's fee shall be shared equally between Client and Attorney. Each Party shall bear its own attorney fees and costs. Whenever possible, any mediator selected shall have expertise in the area of the dispute and any selected mediator must be knowledgeable regarding the mediation process. No person shall serve as mediator in any dispute in which that person has any financial or personal interest in the outcome of the mediation. The mediator's recommendation for settlement, if any, is non-binding on the Parties. Mediation pursuant to this provision shall be private and confidential. Only the Parties and their representatives may attend any mediation session. Other persons may attend only with the written permission of both Parties. All persons who attend any mediation session shall be bound by the confidentiality requirements of California Evidence Code section 1115, et seq., and shall sign an agreement to that effect. Completion of mediation shall be a condition precedent to arbitration, unless the other Party refuses to cooperate in the setting of mediation.

b. Dispute Regarding Fees. Any dispute as to attorney fees and/or costs charged under this Agreement shall to the extent required by law be resolved under the California Mandatory Fee Arbitration Act (Bus. & Prof. Code §§ 6200, et seq.).

c. Binding Arbitration. Except as otherwise set forth in section (b) above, Client and Attorney agree to submit all disputes to final and binding arbitration, either

following mediation which fails to resolve all disputes or in lieu of mediation as may be agreed by the Parties in writing. Either Party may make a written request to the other for arbitration. If made in lieu of mediation, the request must be made within sixty (60) calendar days of the action giving rise to the dispute. If the request for arbitration is made following an unsuccessful attempt to mediate the Parties' disputes, the request must be made within ten (10) calendar days of termination of the mediation. The Parties shall make a good faith attempt to select an arbitrator and complete the arbitration within ninety (90) calendar days. If there is no agreement on an arbitrator, the Parties shall use the Judicial Arbitration and Mediation Service (JAMS). The arbitrator's qualifications must meet the criteria set forth above for a mediator, except, in addition, the arbitrator shall be an attorney or a retired judge, unless otherwise agreed by the Parties. The arbitrator's fee shall be shared equally by both Parties. Each Party shall bear its own attorney fees and other costs. The arbitrator shall render a written decision and provide it to both Parties. The arbitrator may award any remedy or relief otherwise available in court and the decision shall set forth the reasons for the award. The arbitrator shall not have any authority to amend or modify this agreement. Any arbitration conducted pursuant to this paragraph shall be governed by California Code of Civil Procedure sections 1281, et seq. By signing this Agreement, Client acknowledges that this agreement to arbitrate results in a waiver of Client's right to a court or jury trial for any fee dispute or malpractice claim. This also means that Client is giving up Client's right to discovery and appeal. If Client later refuses to submit to arbitration after agreeing to do so, Client may be ordered to arbitrate pursuant to the provisions of California law. Client acknowledges that before signing this Agreement and agreeing to binding arbitration, Client is entitled, and has been given a reasonable opportunity, to seek the advice of independent counsel.

d. Effect of Termination. The terms and conditions of this section shall survive the termination of the Agreement.

12. ENTIRE AGREEMENT. This Agreement with its Professional Rate Schedule attached supersedes any and all other prior or contemporaneous oral or written agreements between the Parties. Each Party acknowledges that no representations, inducements, promises or agreements have been made by any person which are not incorporated herein, and that any other agreements shall be void. Furthermore, any modification of this Agreement shall only be effective if in writing signed by the Parties.

13. SEVERABILITY. Should any provision of this Agreement be held by a court of competent jurisdiction to be invalid, void or unenforceable, but the remainder of the Agreement can be enforced without failure of material consideration to any Party, then this Agreement shall not be affected and it shall remain in full force and effect, unless amended or modified by mutual consent of the Parties; provided, however, that if the invalidity or unenforceability of any provision of this Agreement results in a material failure of consideration, then, to the extent allowed by law, the Party adversely affected thereby shall have the right in its sole discretion to terminate this Agreement upon providing written notice of such termination to the other Party.

14. NON-WAIVER. None of the provisions of this Agreement shall be considered waived by either Party unless such waiver is specified in writing.

15. NO THIRD PARTY RIGHTS. This Agreement shall not create any rights in, or inure to the benefit of, any third party.

16. ASSIGNMENT. The terms and conditions of this Agreement may not be assigned to any third party. Neither Party may assign any right of recovery under or related to the Agreement to any third party.

17. EXECUTION IN COUNTERPARTS; SIGNATURES. This Agreement may be executed in counterparts with signatures appearing on separate signature pages. A copy, or an original, with all signatures appended together shall be deemed a fully executed Agreement. Signatures transmitted by facsimile or electronic image shall be deemed original signatures and binding on the Parties.

WHEREFORE, the Parties hereto, by their signatures below, enter into this Agreement pursuant to the above terms and conditions as of the Effective Date.

CLIENT SIGNATURE	**ATTORNEY SIGNATURE**
Burbank Unified School District	**Lozano Smith, LLP**
BY *(Authorized Signature)*	BY *(Authorized Signature)*
PRINTED NAME AND TITLE OF PERSON SIGNING Peter Knapik Assistant Superintendent, Educational Services	PRINTED NAME AND TITLE OF PERSON SIGNING Karen M. Rezendes, Managing Partner
DATE EXECUTED September 17, 2025	DATE EXECUTED 04/11/2025

LS Lozano Smith
ATTORNEYS AT LAW

PROFESSIONAL RATE SCHEDULE
FOR BURBANK UNIFIED SCHOOL DISTRICT

HOURLY PROFESSIONAL RATES

Client agrees to pay Attorney by the following standard hourly rate*:

Partner**/ Senior Counsel/ Of Counsel	$ 350 - $ 410 per hour
Associate	$ 275 - $ 340 per hour
Paralegal/ Law Clerk	$ 225 - $ 300 per hour
Consultant	$ 125 - $ 395 per hour

* Rates for individual attorneys within each category above vary based upon years of experience. Specific rates for each attorney are available upon request. ** Rates for work performed by Senior Partners with 20 years of experience or more may range from $395 - $450 per hour.

SALE OR LEASE OF REAL PROPERTY WORK

Partner/ Senior Counsel/ Of Counsel	$ 450 per hour
Associate	$ 375 per hour
Paralegal/ Law Clerk	$ 225 per hour

BILLING PRACTICE

Lozano Smith will provide a monthly, itemized Statement for services rendered. Time billed is broken into 1/10 (.10) hour increments, allowing for maximum efficiency in the use of attorney time. Invoices will clearly indicate the department or individuals for whom services were rendered.

Written responses to audit letter inquiries will be charged to Client on an hourly basis, with the minimum charge for such responses equaling .5 hours. Travel time shall be prorated if the assigned attorney travels for two or more clients on the same trip.

COSTS AND EXPENSES

Facsimile	No Charge
Copying and Printing	$0.25 per page
Postage	Actual Usage
Mileage	IRS Standard

Other costs, such as messenger, meals, and lodging shall be charged on an actual and necessary basis.

LEADERSHIP COACHING AND CONSULTING

As part of Lozano Smith's Concierge Consulting Services (CCS), clients have the option of receiving up to five (5) hours of complimentary services which can be utilized each fiscal year. These services may include coaching, mentoring, or strategic planning guidance from a CCS Consultant.

BURBANK UNIFIED SCHOOL DISTRICT
Business Services

REPORT TO THE BOARD

TO:	Members of the Board of Education
FROM :	Jason Hasty, Assistant Superintendent of Business Services
PREPARED BY:	Valezka Emes, Director of Facilities
SUBMITTED BY:	Crystal Cozakos, Senior Administrative Assistant
DATE:	June 25, 2026
SUBJECT:	Approval of Professional Services Agreement, Ninyo & Moore, Compaction and Welding Testing Services for Two (2) Relocatable Classrooms, Adult School Annex (Adult Education Fund)

Background:
The Mingay Adult School Installation of Two Relocatable Buildings Project includes the placement of two relocatable classroom buildings to support program needs at the site. The scope of construction includes over-excavation and re-compaction of approximately three (3) feet of soil to prepare a building pad area of approximately 60 feet by 50 feet, as well as welding of ramp railing components associated with the installation.

In accordance with Division of the State Architect (DSA) requirements, materials testing and special inspection services are required to verify that construction complies with approved plans, specifications, and applicable building codes.

Discussion/Issues:
The District requested a proposal from Ninyo & Moore to provide materials testing and inspection services for the project.

Ninyo & Moore has proposed to provide services including project coordination, field observation and compaction testing during pad preparation, special inspection of welding activities for ramp railings, laboratory testing of soil samples, preparation of field and laboratory reports, and submission of the Final Verified Report (DSA-291).

Services will be provided on a time-and-materials basis and coordinated with the District's construction management team as needed.

Fiscal Impact:
$10,626.00 (Adult Education Fund)

Recommendation:
Jason Hasty, Assistant Superintendent of Business Services, recommends that the Board of Education approve the professional services agreement between Burbank Unified School District and Ninyo & Moore for compaction and welding testing services for the Two (2) Relocatable Buildings Project at Burbank Adult School, effective June 26, 2026 through June 25, 2027, not to exceed $10,626.00 (Adult Education Fund), and that authority to sign the agreement be exercised pursuant to BUSD - AR 3314, as presented.

May 27, 2026
Proposal No. 04IRV06-05518

Ms. Malihe Shokouhi, M. Arch, LEED AP, DBIA
Design & Construction PM
Burbank Unified School District
1900 W. Olive Avenue
Burbank, California 91506

Subject: Proposal for Materials Testing Services
Mingay Adult School Installation of Two Relocatable Buildings Project
3715 W. Allan Avenue
Burbank, California 91505
DSA Application No. 03-125885

Dear Ms. Shokouhi:

Ninyo & Moore is pleased to submit this proposal for materials testing services during construction of the Mingay Adult School Installation of Two Relocatable Buildings Project located in Burbank, California. Based on our review of the project plans, DSA-103 and our discussions with you, we understand that the planned project generally consists of installing two relocatable buildings. The construction will include over-excavation and recompaction of the upper 3 feet of material for building pad preparation. The pad preparation area is approximately 60-feet by 50-feet. The construction will also include welding of ramp railing.

SCOPE OF SERVICES

Based on our understanding of the proposed construction and our experience with similar projects, we propose to provide the following scope of services:

- Project coordination, technical support, and management, including review of the project plans and specifications, distribution of test reports, and work scheduling.
- Field Technician services for observation and documentation during building pad preparation. Field density tests will be performed to evaluate the Contractor's compaction efforts.
- Field Special Inspector services for inspection of welds for the ramp railing.
- Preparation of progress reports, test data sheets, and field memoranda to document the items inspected.
- Laboratory testing on material samples obtained in the field, including but not limited to proctor density of soils.
- Preparation and submittal of the Laboratory Final Verified Report (DSA-291).

ASSUMPTIONS

Based on our experience with similar projects, the following assumptions have been made in the preparation of our scope of services:

- Our services are subject to prevailing wage requirements.
- Our services will be scheduled and coordinated by the construction management and inspection team on an as-needed basis.
- Building fabrication inspections are not included in our scope.
- The proposed field services will be performed during normal working hours (Monday through Friday, 7 AM to 5 PM).

ESTIMATED FEE

We propose to provide our services on a time-and-materials basis in accordance with the attached Schedule of Fees. Our estimated fee for the scope of services described herein is presented in the attached Table 1.

Ninyo & Moore appreciates the opportunity to provide services on this project, and we look forward to working with you.

Respectfully submitted,
NINYO & MOORE



Alfredo “Tino” Rodriguez
Principal, Construction Services

AR/mlc

Attachments: Table 1 – Breakdown of Estimated Fee
Schedule of Fees

Table 1 – Breakdown of Estimated Fee						
Field Services						
Field Technician - Building Pad Preparation	32 hours	@	$ 130.00	/hour	$	4,160.00
Special Inspector - Welding	16 hours	@	$ 135.00	/hour	$	2,160.00
Sample Pickup	6 hours	@	$ 120.00	/hour	$	720.00
			Subtotal		**$**	**7,040.00**
Laboratory Testing						
Proctor Density	1 test	@	$ 220.00	/hour	$	220.00
			Subtotal		**$**	**220.00**
Reimbursables						
Field Vehicle Usage	48 hours	@	$ 15.00	/hour	$	720.00
Field Equipment Usage	48 hours	@	$ 12.00	/hour	$	576.00
			Subtotal		**$**	**1,296.00**
Report Preparation (DSA-291)						
Principal Engineer/Geologist/Environmental Scientist	2 hours	@	$ 250.00	/hour	$	500.00
Senior Engineer/Geologiest/Environmental Scientist	2 hours	@	$ 220.00	/hour	$	440.00
			Subtotal		**$**	**940.00**
Project Coordination, Management and Technical Support						
Principal Engineer/Geologist/Environmental Scientist	1 hour	@	$ 250.00	/hour	$	250.00
Senior Engineer/Geologiest/Environmental Scientist	4 hours	@	$ 220.00	/hour	$	880.00
			Subtotal		**$**	**1,130.00**
TOTAL ESTIMATED FEE					**$**	**10,626.00**

Schedule of Fees

Hourly Charges for Personnel

Professional Staff

Principal Engineer/Geologist/Environmental Scientist/Certified Industrial Hygienist	$ 250
Senior Engineer/Geologist/Environmental Scientist	$ 235
Senior Project Engineer/Geologist/Environmental Scientist	$ 220
Project Engineer/Geologist/Environmental Scientist	$ 210
Senior Staff Engineer/Geologist/Environmental Scientist	$ 200
Staff Engineer/Geologist/Environmental Scientist	$ 180
GIS Analyst	$ 160
Technical Illustrator/CAD Operator	$ 140

Field Staff

Certified Asbestos/Lead Technician	$ 220
Field Operations Manager	$ 150
Nondestructive Examination Technician (UT, MT, LP)	$ 145
Supervisory Technician	$ 140
Special Inspector (Concrete, Masonry, Structural Steel, Welding, and Fireproofing)	$ 135
Senior Technician	$ 135
Technician	$ 130

Administrative Staff

Information Specialist	$ 120
Geotechnical/Environmental/Laboratory Assistant	$ 120
Data Processor	$ 95

Other Charges

Concrete Coring Equipment (includes technician)	$ 190/hr
Anchor Load Test Equipment (includes technician)	$ 190/hr
GPR Equipment	$ 180/hr
Inclinometer	$ 100/hr
Hand Auger Equipment	$ 80/hr
Rebar Locator (Pachometer)	$ 25/hr
Vapor Emission Kit	$ 65/kit
Field Testing Equipment Usage	$ 12/hr
X-Ray Fluorescence	$ 70/hr
PID/FID	$ 25/hr
Air Sampling Pump	$ 10/hr
Field Vehicle	$ 15/hr
Equipment	$ 15/hr
Expert Witness Testimony	$ 450/hr
Direct Expenses	Cost plus 15 %

Special equipment charges will be provided upon request.

Notes

Technicians and special inspectors, are charged at a 4-hour minimum, and 8-hour minimum for hours exceeding 4 hours. Overtime rates at 1.5 times the regular rates will be charged for work performed in excess of 8 hours in one day Monday through Friday and all day on Saturday. Rates at twice the regular rates will be charged for all work in excess of 12 hours in one day, all day Sunday and on holidays.

Our rates will be adjusted in conjunction with the increase in the Prevailing Wage Determination during the life of the project, as applicable.

The terms and conditions are included in Ninyo & Moore's Work Authorization and Agreement form.

Schedule of Fees for Laboratory Testing

SOILS

Atterberg Limits, D 4318, CT 204	$ 170
California Bearing Ratio (CBR), D 1883	$ 550
Chloride and Sulfate Content, CT 417 & CT 422	$ 175
Consolidation, D 2435, CT 219	$ 300
Consolidation, Hydro-Collapse only, D 2435	$ 150
Consolidation – Time Rate, D 2435, CT 219	$ 200
Direct Shear – Remolded, D 3080	$ 350
Direct Shear – Undisturbed, D 3080	$ 300
Durability Index, CT 229	$ 175
Expansion Index, D 4829, IBC 18-3	$ 190
Expansion Potential (Method A), D 4546	$ 170
Geofabric Tensile and Elongation Test, D 4632	$ 200
Hydraulic Conductivity, D 5084	$ 350
Hydrometer Analysis, D 6913, CT 203	$ 220
Moisture, Ash, & Organic Matter of Peat/Organic Soils	$ 120
Moisture Only, D 2216, CT 226	$ 35
Moisture and Density, D 2937	$ 45
Permeability, CH, D 2434, CT 220	$ 300
pH and Resistivity, CT 643	$ 175
Proctor Density D1557, D 698, CT 216, AASHTO T-180	$ 220
Proctor Density with Rock Correction D 1557	$ 340
R-value, D 2844, CT 301	$ 375
Sand Equivalent, D 2419, CT 217	$ 125
Sieve Analysis, D 6913, CT 202	$ 145
Sieve Analysis, 200 Wash, D 1140, CT 202	$ 100
Specific Gravity, D 854	$ 125
Thermal Resistivity (ASTM 5334, IEEE 442)	$ 925
Triaxial Shear, C.D, D 4767, T 297	$ 550
Triaxial Shear, C.U., w/pore pressure, D 4767, T 2297 per pt	$ 450
Triaxial Shear, C.U., w/o pore pressure, D 4767, T 2297 per pt	$ 350
Triaxial Shear, U.U., D 2850	$ 250
Unconfined Compression, D 2166, T 208	$ 180

MASONRY

Brick Absorption, 24-hour submersion, 5-hr boiling, 7-day, C 67	$ 70
Brick Compression Test, C 67	$ 55
Brick Efflorescence, C 67	$ 55
Brick Modulus of Rupture, C 67	$ 50
Brick Moisture as received, C 67	$ 45
Brick Saturation Coefficient, C 67	$ 60
Concrete Block Compression Test, 8x8x16, C 140	$ 70
Concrete Block Conformance Package, C 90	$ 500
Concrete Block Linear Shrinkage, C 426	$ 200
Concrete Block Unit Weight and Absorption, C 140	$ 70
Cores, Compression or Shear Bond, CA Code	$ 70
Masonry Grout, 3x3x6 prism compression, C 39	$ 45
Masonry Mortar, 2x2 cube compression, C 109	$ 35
Masonry Prism, half size, compression, C 1019	$ 120
Masonry Prism, Full size, compression, C 1019	$ 200

REINFORCING AND STRUCTURAL STEEL

Chemical Analysis, A 36, A 615	$ 135
Fireproofing Density Test, UBC 7-6	$ 90
Hardness Test, Rockwell, A 370	$ 80
High Strength Bolt, Nut & Washer Conformance, per assembly, A 325	$ 150
Mechanically Spliced Reinforcing Tensile Test, ACI	$ 175
Pre-Stress Strand (7 wire), A 416	$ 170
Reinforcing Tensile or Bend up to No. 11, A 615 & A 706	$ 75
Structural Steel Tensile Test: Up to 200,000 lbs., A 370	$ 90
Welded Reinforcing Tensile Test: Up to No. 11 bars, ACI	$ 80

CONCRETE

Compression Tests, 6x12 Cylinder, C 39	$ 35
Concrete Mix Design Review, Job Spec	$ 300
Concrete Mix Design, per Trial Batch, 6 cylinder, ACI	$ 850
Concrete Cores, Compression (excludes sampling), C 42	$ 120
Drying Shrinkage, C 157	$ 400
Flexural Test, C 78	$ 85
Flexural Test, C 293	$ 85
Flexural Test, CT 523	$ 95
Gunite/Shotcrete, Panels, 3 cut cores per panel and test, ACI	$ 275
Lightweight Concrete Fill, Compression, C 495	$ 80
Petrographic Analysis, C 856	$ 2,000
Restrained Expansion of Shrinkage Compensation	$ 450
Splitting Tensile Strength, C 496	$ 100
3x6 Grout, (CLSM), C 39	$ 55
2x2x2 Non-Shrink Grout, C 109	$ 55

ASPHALT

Air Voids, T 269	$ 85
Asphalt Mix Design, Caltrans (incl. Aggregate Quality)	$ 4,500
Asphalt Mix Design Review, Job Spec	$ 180
Dust Proportioning, CT LP-4	$ 85
Extraction, % Asphalt, including Gradation, D 2172, CT 382	$ 250
Extraction, % Asphalt without Gradation, D 2172, CT 382	$ 150
Film Stripping, CT 302	$ 120
Hveem Stability and Unit Weight D 1560, T 246, CT 366	$ 225
Marshall Stability, Flow and Unit Weight, T 245	$ 240
Maximum Theoretical Unit Weight, D 2041, CT 309	$ 150
Moisture Content, CT 370	$ 95
Moisture Susceptibility and Tensile Stress Ratio, T 238, CT 371	$ 1,000
Slurry Wet Track Abrasion, D 3910	$ 150
Superpave, Asphalt Mix Verification (incl. Aggregate Quality)	$ 4,900
Superpave, Gyratory Unit Wt., T 312	$ 100
Superpave, Hamburg Wheel, 20,000 passes, T 324	$ 1,000
Unit Weight sample or core, D 2726, CT 308	$ 100
Voids in Mineral Aggregate, (VMA) CT LP-2	$ 90
Voids filled with Asphalt, (VFA) CT LP-3	$ 90
Wax Density, D 1188	$ 140

AGGREGATES

Clay Lumps and Friable Particles, C 142	$ 180
Cleanness Value, CT 227	$ 180
Crushed Particles, CT 205	$ 175
Durability, Coarse or Fine, CT 229	$ 205
Fine Aggregate Angularity, ASTM C 1252, T 304, CT 234	$ 180
Flat and Elongated Particle, D 4791	$ 220
Lightweight Particles, C 123	$ 180
Los Angeles Abrasion, C 131 or C 535	$ 200
Material Finer than No. 200 Sieve by Washing, C 117	$ 90
Organic Impurities, C 40	$ 90
Potential Alkali Reactivity, Mortar Bar Method, Coarse, C 1260	$ 1,250
Potential Alkali Reactivity, Mortar Bar Method, Fine, C 1260	$ 950
Potential Reactivity of Aggregate (Chemical Method), C 289	$ 475
Sand Equivalent, T 176, CT 217	$ 125
Sieve Analysis, Coarse Aggregate, T 27, C 136	$ 120
Sieve Analysis, Fine Aggregate (including wash), T 27, C 136	$ 145
Sodium Sulfate Soundness, C 88	$ 450
Specific Gravity and Absorption, Coarse, C 127, CT 206	$ 115
Specific Gravity and Absorption, Fine, C 128, CT 207	$ 175

ROOFING

Roofing Tile Absorption, (set of 5), C 67	$ 250
Roofing Tile Strength Test, (set of 5), C 67	$ 250

Special preparation of standard test specimens will be charged at the technician's hourly rate.
Ninyo & Moore is accredited to perform the AASHTO equivalent of many ASTM test procedures.

BURBANK UNIFIED SCHOOL DISTRICT
Business Services

REPORT TO THE BOARD

TO:	Members of the Board of Education
FROM :	Jason Hasty, Assistant Superintendent of Business Services
PREPARED BY:	Valezka Emes, Director of Facilities
SUBMITTED BY:	Crystal Cozakos, Senior Administrative Assistant
DATE:	June 25, 2026
SUBJECT:	Approval of Award of Contract, OPTERRA Energy Services, Purchase of Spare Solar Panels to Support Replacement and Future Repairs to District Photovoltaic Systems (Restricted Routine Maintenance)

Background:
The District currently has a maintenance agreement with OPTERRA Energy Services for the solar panels, which includes inspection, testing, monitoring, and cleaning for the following sites: Bret Harte Elementary School, Burbank Adult School, Dolores Huerta Middle School, George Washington Elementary School, John Muir Middle School, Luther Burbank Middle School, Ralph Waldo Emerson Elementary School, and Thomas Jefferson Elementary School.

OPTERRA has informed the District that the SolarWorld module model used in the District's systems is no longer in production and, once OPTERRA's remaining inventory is depleted, identical replacement modules may no longer be available.

Discussion/Issues:
During routine panel washing, OPTERRA's panel wash crew identified broken panels at District sites. OPTERRA currently has a limited inventory of compatible SolarWorld solar modules available for purchase to maintain as spare panels for the District's photovoltaic systems.

On May 1, 2026, OPTERRA Energy Services submitted a proposal for the District to purchase one pallet, consisting of twenty-two (22) SolarWorld SW 340 XL Mono spare solar panels, for future repairs.

Purchasing these spare panels will allow the District to maintain compatible replacement modules on hand for future photovoltaic system repairs, as needed.

Fiscal Impact:
$11,269.90 (Restricted Routine Maintenance Fund)

Recommendation:
Jason Hasty, Assistant Superintendent of Business Services, recommends that the Board of Education approve the award of contract between Burbank Unified School District and OPTERRA Energy Services for the purchase of one pallet, consisting of twenty-two (22) SolarWorld SW 340 XL Mono spare solar panels, to support replacement and future repairs to District photovoltaic systems, effective June 26, 2026, through June 25, 2027, not to exceed $11,269.90 (Restricted Routine Maintenance Fund), and that authority to sign the contract be exercised pursuant to BUSD - AR 3314, as presented.

May 1, 2026

Jason Hasty
Burbank Unified School District
Interim Assistant Superintendent
Office 310-848-9799
johnuribe@burbankusd.org

Project Reference: Spare Panel Proposal

Dear Mr. Hasty,

The following proposal outlines an opportunity to purchase SolarWorld solar modules from our remaining inventory to maintain as spare panels for your PV system. Our panel wash crew found 7 broken panels between 2 of your sites.

Please note that the SolarWorld module model used in your systems is no longer in production. Because this module model has been discontinued, once the remaining inventory is depleted, identical replacements may no longer be available.

Our available inventory is limited and intended to support customers who wish to keep compatible replacement modules on hand.

If you would like to proceed, please sign the last page where indicated.

Thank you for being a valued solar customer!

Stephanie Leonard

Project Coordination Analyst
805-794-5447 | sleonard@opterraenergy.com

Work Order

This Work Order ("Work Order") dated May 1, 2026 ("Work Order Effective Date") is issued pursuant to and is subject to the terms and conditions of the Operations & Maintenance Agreement ("Agreement") by and between OPTERRA Energy Services, LLC ("OPTERRA") and Burbank Unified School District ("Customer") dated August 1, 2023. The terms and conditions of the Agreement are hereby incorporated into and made a part of this Work Order for all purposes.

Scope of Work

Provide 1 pallet (22 pieces) of spare solar panels for future repairs.

Cost Estimate

Labor	Hours/ Mileage	Hourly Rate	Total Price
Journeyman Electrician Travel & Labor	0	$ 142.00	$ -
Apprentice Travel & Labor	0	$ 125.00	$ -
Regional Service Manager	0	$ 283.00	$ -
Project Management Advisor	0	$ 230.00	$ -
Project Admin Labor & Certified Payroll	0	$ 108.00	$ -
Roundtrip Mileage	0	$ 1.05	$ -
Labor Subtotal			**$ -**
Materials & Equipment Rental	**QTY**	**Unit Cost**	**Total Price**
1 Full Pallet (22 panels/pallet) - (SolarWorld SW 340 XL Mono)	22	$ 340.00	$ 7,480.00
PV Module Freight & Handling	1	$ 1,500.00	$ 1,500.00
Material Subtotal			**$ 8,980.00**
Subtotal			**$ 8,980.00**
Material Sales Tax		10.50%	$ 942.90
Material Markup		15%	$ 1,347.00
Total Material Cost			**$ 11,269.90**
Grand Total			**$ 11,269.90**

STRICTLY CONFIDENTIAL

Exclusions & Legal Disclaimer:

Premium Time or Over Time, Work on Nights or Weekends, Cutting, Patching or Painting, Permitting Fees, Plan Revisions, Geotechnical Reports/inspections, PLA/PSA Agreements, Irrigation system inspection/repairs, Landscape repair/tire track removal, Landscape Maintenance, Infestations, Utility Interconnection Agreement Modification Fees.

© 2025 OPTERRA. All Rights Reserved. Company Confidential. All trademarks are the property of their respective owners.

This proposal document constitutes a non-binding indication of interest on the part of OPTERRA and is not intended to and does not create any legally binding commitment or obligation on the part of OPTERRA whatsoever. The certainty of such a legally binding commitment or obligation is subject to, among other things, the satisfactory completion by OPTERRA and Customer of the negotiation, execution, and delivery of definitive documents which collectively are required to fully implement the scope that shall contain such representations, warranties, covenants, and other terms as shall be mutually agreed upon and approved by the respective committees, boards, and management of OPTERRA. It is understood that OPTERRA, on one hand, and the Customer, on the other hand, shall not be legally bound to the other by reason of this proposal, nor shall rights, liabilities or obligations arise as a result of this submittal.

Acceptance and Notice to Proceed

Scope of work to be included: Provide spare solar panels $11,269.90*.

*Bond and Certificate of Insurance are not included. Additional costs will apply if required.

Pricing assumes State prevailing wages for on-site labor. Quote valid for 30 days.

Payment to OPTERRA Energy Services, LLC is not contingent on Customer's receipt of any insurance proceeds and will be invoiced by OPTERRA Energy Services, LLC to Customer in a lump sum upon the completion of the work under this Work Order. Customer will pay OPTERRA Energy Services, LLC the full invoiced amount within thirty (30) calendar days after its receipt of the corresponding invoice

By signing below, Customer agrees to the terms and conditions set forth in this Work Order and authorizes OPTERRA Energy Services, LLC to proceed with the scope of work set forth herein.

The Parties may execute this Work Order in counterparts, each counterpart constituting an original, and all counterparts, collectively, constituting only one Work Order. The signatures of each Party need not appear on the same counterpart, and in the event that any signature is delivered by facsimile transmission or by e-mail delivery of a ".pdf" format data file, such signature will create a valid and binding obligation of the Party executing (or on whose behalf such signature is executed) with the same force and effect as if such facsimile or ".pdf" signature page were an original thereof.

IN WITNESS WHEREOF, and intending to be legally bound, the Parties hereto subscribe their names to this Work Order by their duly authorized officers as of the Work Order Effective Date.

CUSTOMER:	**OPTERRA:**
Burbank Unified School District	OPTERRA Energy Services, LLC
By: _____	By: _____
Name: _____	Name: _____
Title: _____	Title: _____
Date: _____	Date: _____

STRICTLY CONFIDENTIAL

BURBANK UNIFIED SCHOOL DISTRICT
Business Services

REPORT TO THE BOARD

TO:	Members of the Board of Education
FROM :	Jason Hasty, Assistant Superintendent of Business Services
PREPARED BY:	Valezka Emes, Director of Facilities
SUBMITTED BY:	Crystal Cozakos, Senior Administrative Assistant
DATE:	June 25, 2026
SUBJECT:	Approval of Notice of Completion, Reliable Floor Covering Inc., CUPCCAA Bid 2526-017, Furnish and Install Flooring in Three (3) Classrooms, Burbank Adult School (Adult Education Fund)

Background:
Due to age, wear, and water damage from recent winter storms, classroom flooring at Burbank Adult School required urgent replacement. The District issued a CUPCCAA informal bid for Flooring Replacement in three (3) classrooms at the Burbank Adult School and received one responsive bid from Reliable Floor Covering Inc.

Discussion/Issues:
Burbank Adult School is dedicated to providing educational opportunities that support all students in achieving success within optimal learning environments. Maintaining well-kept facilities is essential not only for the health and safety of current students and staff, but also for attracting and retaining adult learners. Ensuring that classroom environments are in excellent condition minimizes disruptions to instruction and enhances the overall educational experience.

Replacement of the flooring in classrooms D400, D401, and D402 was necessary to restore the spaces to appropriate learning conditions, as the existing flooring had deteriorated beyond repair due to extensive wear and water damage. The work was completed in May 2026, resulting in improved classroom functionality and a safer, more conducive learning environment.

Fiscal Impact:
$28,980.00 (Adult Education Fund)
11.0-63910.0-41102-10000-6250-5330000

Recommendation:
Jason Hasty, Assistant Superintendent of Business Services recommends that the Board of Education approve the Notice of Completion for Reliable Floor Covering Inc., for CUPCCAA Bid No. 2526-017, flooring replacement in three (3) classrooms at Burbank Adult School, and accept the project as complete.

BURBANK UNIFIED SCHOOL DISTRICT
Business Services

REPORT TO THE BOARD

TO:	Members of the Board of Education
FROM :	Jason Hasty, Assistant Superintendent of Business Services
PREPARED BY:	Valezka Emes, Director of Facilities
SUBMITTED BY:	Crystal Cozakos, Senior Administrative Assistant
DATE:	June 25, 2026
SUBJECT:	Approval of Award of Contract, Sierra School Equipment Co., Furnish and Install New Crusader Chairs, Auditorium, Washington Elementary (Gift Fund)

Background:
Washington Elementary School has raised funds to upgrade the auditorium seating, as many existing seats are broken and unusable due to missing armrests and split wood. This deterioration has made it difficult to accommodate large audience groups. While the BUSD Facilities Department has performed repairs over the years, replacement parts are no longer available due to the age of the seating.

On October 17, 2023, the Arvin Union School District awarded Contract No. 2023-24-012 to Sierra School Equipment Company for school furnishings, office furniture, and accessories. This contract includes a piggyback provision and has been extended through October 16, 2026, utilizing the manufacturer's current price list.

Discussion/Issues:
On May 1, 2026, the District received a proposal from Sierra School Equipment Company to remove and dispose of the existing auditorium seating and replace it with new Irwin Crusader chairs. The project includes the installation of a total of 282 fixed, floor-mounted chairs featuring maple veneer plywood seats and maple hardwood center and aisle armrests.

Additionally, the scope includes three (3) ADA-compliant swing-away aisle seating sets and seven (7) chairs mounted on movable base platforms. Spare chairs and replacement components will also be provided to support ongoing maintenance and future repairs.

Fiscal Impact:
$120,281.00 (Gift Fund)

- 01.0-90704.0-11100-10000-6405-2160000 $23,560
- 01.0-67700.3-11100-10000-6405-2160000 $14,458
- 01.0-67700.2-11100-10000-6405-2160000 $12,317
- 01.0-90820.0-11100-10000-6405-2160000 $70,000

Recommendation:
Jason Hasty, Assistant Superintendent of Business Services, recommends that the Board of Education approve the award of contract with Sierra School Equipment Company to furnish and install new Crusader chairs in the auditorium at Washington Elementary School, effective June 26, 2026, through June 25, 2027, not to exceed $120,281.00 (Gift Funds), and that authority to sign the contract be exercised pursuant to BUSD - AR 3314, as presented.

SIERRA
SCHOOL EQUIPMENT CO.

3003 Citation Way, Bakersfield, CA 93308
P.O. Box 80667 Bakersfield, CA 93380-0667
O 661-399-2993 | F 661-399-0218
www.ssecinc.com

May 1, 2026

David Gerharter
Director of Purchasing, Warehouse, and Reprographics
Burbank Unified School District
1900 W. Olive Avenue
Burbank, CA 91506

Office: (818) 729-4533
E-Mail: DavidGerharter@burbankusd.org

RE: GEORGE WASHINGTON ELEMENTARY SCHOOL
NEW IRWIN SEATING COMPANY CRUSADER CHAIRS

Dear David,

In accordance with your request, and our onsite meeting, we are pleased to present the following updated proposal that includes provision and installation of new Irwin Seating Company Crusader chairs for your consideration. Proposal is based upon standard Irwin Seating Company Construction, and Finish Selections. Proposal is lump sum and includes applicable 10.50% sales tax and payment/performance bond costs. Proposal is based upon work being completed prior to the end of August 2026. Proposal is valid for 60 days from date noted above. Demo/Disposal of the existing seating is also included within this proposal pricing. This proposal may be purchased via the Arvin Piggyback Bid No. 2023-24-012 with a full breakdown for accounting purposes available if you wish to proceed with this order. Please contact us with any questions or if you need additional information. Thank you.

Quantity:	**Description:**
1 Lot	Irwin Seating Company Crusader Chairs Model No. 1B-14S-10E-4C as described herein:

- Two Hundred and Eighty-Two (282) each fixed floor-mounted chairs.
- No. 1B Crusader - Non-upholstered 7/16" thick 7-ply plywood back surfaced with class A face **Maple Veneer**.
- No. 14S Crusader - non-upholstered 7/16” thick 7-ply **Maple Veneer** plywood seat.
- No. 10E Enclosed Aisle End with **Maple Veneer** insert panel.
- No. 4C Universal steel chair platform.
- Comfort curved solid **Maple** hardwood Center armrests.
- Comfort curved solid **Maple** hardwood Aisle armrests.
- Three (3) each Flip-Up Style ADA Aisle Armrests for compliance.

SIERRA
SCHOOL EQUIPMENT CO.
EST. 1957

3003 Citation Way, Bakersfield, CA 93308
P.O. Box 80667 Bakersfield, CA 93380-0667
O 661-399-2993 | F 661-399-0218
www.ssecinc.com

- Seven (7) each chairs mounted on Movable Base Platforms.
- Hilti KB-TZ2 1/4" x 3 1/4" concrete anchors with Foot Shrouds to conceal anchor bolt heads.
- Standard Irwin 5-Year warranty.

SPARES FOR ATTIC STOCK:

- Five (5) each Spare No. 1B Crusader - Non-upholstered 7/16" thick 7-ply plywood back surfaced with class A face **Maple Veneer**.
- Five (5) each Spare No. 14S Crusader - non-upholstered 7/16" thick 7-ply **Maple Veneer** plywood seat.
- Three (3) each Spare No. 4C Universal steel chair platform.
- Two (2) each Spare No. 10E Enclosed Aisle End with **Maple Veneer** insert panel.
- Three (3) each Spare Comfort curved solid **Maple** hardwood Center armrests.
- Two (2) each Spare Comfort curved solid **Maple** hardwood Aisle armrests.

FINISHES:

- Wood Species: Maple (Rotary Cut).
- Wood Stain: Standard Irwin Selections.
- Powder Coat: Standard Irwin Selections.
- Plastic Color: Standard Irwin Selections.

PRICE: **Demo and Disposal of Existing Seating, Furnish, Freight, Offload, Installation of New Irwin Chairs, 10.50% CA Sales Tax, and Payment/Performance Bond Costs: . . . . . .$ 120,281.00**

SIERRA
SCHOOL EQUIPMENT CO.
EST. 1957

3003 Citation Way, Bakersfield, CA 93308
P.O. Box 80667 Bakersfield, CA 93380-0667
O 661-399-2993 | F 661-399-0218
www.ssecinc.com

QUALIFICATIONS:

1) **Project is based upon Material and Labor being completed by the end of September 2026. If the project is delayed beyond this date due to action or inaction of the GC, the Owner, the Architect, another subcontractor, or another third party, there may be an escalation in pricing from the Factory or the Installation Subcontractors, that must be addressed by the Owner via an additive change order to our Firm. This change order may include escalation in material costs being applied to the quote by the Factory and/or labor increases to install the said product.**

2) Our COST does NOT include cost for SAFETY PROVISIONS for VIRUSES or NATURAL DISASTERS.

3) We CANNOT provide insurance coverage that does not exclude “communicable disease, viruses, bacteria, or fungi” therefore that coverage is NOT available.

4) Prices quoted are valid for 60-days due to raw material pricing extreme volatility. The Factory will only hold pricing for 60-days from Bid Date, if we do not receive a Letter of Intent within 60-days, the proposal is subject to an escalation from the factory.

5) Prices quoted are based on furnishing the above-described equipment in accordance with the manufacturer's published standard construction specifications (unless otherwise noted) and specifically exclude furnishing products by any other manufacturer or to any other specification.

6) The unit prices provided are based upon supplying the quantity provided for above. Purchasing less material may require an escalation from the factory.

7) If a license is required to be provided to comply with a local jurisdiction, such as a city business license or any other local compliance fees or licenses, the cost is not included in our proposal and said cost will need to be added to the subcontract amount if the general contractor requires said license to be provided.

8) Sales tax has been included at 10.50%.

INSURANCE QUALIFICATIONS FOR SSEC AND ONSITE INSTALLATION SUBCONTRACTORS:

1) We shall provide insurance coverage for our work as per the attached Certificate of Insurance.

2) If Additional insured status is required, we shall use Travelers blanket endorsement form #WC 99 03 76. This may or may not be the additional insured endorsement you request. We cannot provide the CG2010 1085 or 11/85 form.

3) Our general liability policy includes waiver of subrogation and primary insurance wording. We cannot provide severability of interest or cross liability coverage.

SIERRA
SCHOOL EQUIPMENT CO.

3003 Citation Way, Bakersfield, CA 93308
P.O. Box 80667 Bakersfield, CA 93380-0667
O 661-399-2993 | F 661-399-0218
www.ssecinc.com

STANDARD SUBCONTRACT / PURCHASING AGREEMENT QUALIFICATIONS:

We reserve the right, upon review of the Subcontract / Purchasing Agreements, **TO REQUEST MODIFICATIONS AS NEEDED** to these documents. We will not agree to a blanket request to execute subcontract forms and agreements without modification.

ADDENDA:	N/A.
BONDS:	We are bondable, **AND** the bond price is **INCLUDED**. Our bond rate is 1.25%.
WAGE:	**Standard prevailing wage labor rates included.**
STATUS:	We are not MBE, WBE, DVBE or SBE.
CONTACTS:	**Lucas McAndrews @ (661) 374-7196 or lucasmcandrews@ssecinc.com** Tony Hellus @ (435) 574-2464 or tonyhellus@ssecinc.com

CONTRACTOR'S LICENSE NUMBER: 422359

EXPIRATION DATE: 5/31/2028

DEPARTMENT OF INDUSTRIAL RELATIONS NUMBER: 1000003627

EXPIRATION DATE: 6/30/2028

FEDERAL TAX ID: 95-3159131

EMR: .73

GENERAL NOTES:

Pricing includes Demo and Disposal of Existing Seating, Furnish, Freight, Offload, Installation of New Irwin Chairs, 10.50% CA Sales Tax, and Payment/Performance Bond Costs. Prices quoted are based on furnishing the above-described equipment in accordance with the manufacturer's published standard construction specifications (unless otherwise noted) and specifically exclude furnishing products by any other manufacturer or to any other specification. **Prices quoted are valid for 60 days from quote date. If a purchase order is received after this date, the proposal is subject to an escalation from the factory.** Delivery timeline will be based on final color selection and when order is placed. Shop Drawings (if necessary) take approximately 4-weeks after receipt of order. This quotation shall become part of any order entered into for any of the described equipment. Proposal valid for work completed prior to the end of September 2026.

SIERRA
SCHOOL EQUIPMENT CO.

3003 Citation Way, Bakersfield, CA 93308
P.O. Box 80667 Bakersfield, CA 93380-0667
O 661-399-2993 | F 661-399-0218
www.ssecinc.com

Sincerely,

SIERRA SCHOOL EQUIPMENT COMPANY

Lucas McAndrews

Lucas McAndrews
Account Representative
(661) 374-7196 Cell
(661) 399-0218 Fax
lucasmcandrews@ssecinc.com

Dated: May 1, 2026

Burbank Unified School District
Department of Student Services

REPORT TO THE BOARD

TO: Members of the Board of Education

FROM: Peter Knapik, Assistant Superintendent of Educational Services

PREPARED BY: Narineh Barzegar, Director of Student Services

SUBMITTED BY: Lauren Dieter, Administrative Secretary

DATE: June 25, 2026

SUBJECT: Amendment of Agreement for Professional Services

Background:
Pursuant to Board Policy 3312, the Board of Education designee may contract with consultants to provide services that District Staff are not able to provide. The District contracts with agencies to provide other health services on an "as needed" basis when the District does not have qualified staff available for students on 504 plans. Student Services requests the following blanket purchase order be approved by the Board of Education to cover the provider listed below.

Discussion/lssues:
Funding for this amendment is being moved from another provider to this recommended provider. Each invoice received requires approval from Student Services in order to issue payment to the provider. Provider may service all BUSD schools during the school day, Monday through Friday, based on the student's specific needs and schedule. See attached rate sheet for further details.

Fiscal Impact:
Not to exceed ~~$90,000~~ $122,000 funded through Student Services special uses account string. Funds are being moved from another provider to this recommended provider.

Recommendation:
Peter Knapik, Assistant Superintendent of Educational Services, recommends that the Board of Education ratifies the agreement for services between the Burbank Unified School District and Covelo Group Inc. to provide other health services on an "as needed" basis when other qualified staff are not available effective August 22, 2025 through June 30, 2026, not to exceed ~~$90,000~~

$122,000 (01.0-00000-11100-10000-5810-7450000), and that the authority to sign the agreement be exercised pursuant to BUSD/AR 3314, as presented.

BURBANK UNIFIED SCHOOL DISTRICT
Business Services

REPORT TO THE BOARD

TO:	Members of the Board of Education
FROM :	Jason Hasty, Assistant Superintendent of Business Services
PREPARED BY:	Robin Rickman, Project Manager
SUBMITTED BY:	Megan Burkhart, Facilities Operations Construction Technician
DATE:	June 25, 2026
SUBJECT:	Approval of Deductive Change Order No. 1, The Garland Company, Inc., Purchase Order No. 26002689: Summer 2026 Roofing Project, Thomas Edison Elementary School — Roofing Materials (Measure ABC Bond Fund)

Background:
The District is in the process of the second phase of the Measure ABC Bond District-Wide Roofing Project. This includes replacing roofs during summer 2026 at Dolores Huerta Middle School, Mingay Burbank Adult School, Walt Disney Elementary School, Providencia Elementary School, District Service Center, District Administration Building, Bret Harte Elementary School, Thomas Edison Elementary School, and Theodore Roosevelt Elementary School.

The purchase order with The Garland Company, Inc. for roofing materials for Thomas Edison Elementary School was issued in the amount of $95,530.24.

Discussion/Issues:
Deductive Change Order No. 1 reflects a reduction to the purchase order for roofing materials for Thomas Edison Elementary School. The reduction is due to the removal of roofing materials and freight associated with Portable Building Classroom No. 25, as the building will be removed and replaced with another portable building in the future.

The materials and freight associated with this portion of the purchase order have not been purchased. Deductive Change Order No. 1 reduces the purchase order by $7,229.90, from $95,530.24 to $88,300.34.

Original purchase order amount: $95,530.24
Deductive Change Order No. 1: ($7,229.90)
Revised purchase order amount: $88,300.34

Fiscal Impact:
The revised purchase order amount is $88,300.34 to reflect approval of Deductive Change Order No. 1 (Measure ABC Bond Fund)

Recommendation:
Jason Hasty, Assistant Superintendent of Business Services, recommends that the Board approve Deductive Change Order No. 1, The Garland Company, Inc., Purchase Order No. 26002689: Summer 2026 Roofing Project, Thomas Edison Elementary School — Roofing Materials, reducing the purchase order by $7,229.90 for a revised not to exceed $88,300.34, (21.0-00000-0-00000-85000-4310-2020000, Measure ABC Bond Fund), and that authority to sign the agreement be exercised pursuant to BUSD–AR 3314, as presented.

BURBANK UNIFIED SCHOOL DISTRICT

Bond Management Office
510 S. Shelton St.
Burbank, CA 91506

CHANGE ORDER

Project Name:	Summer 2026 Roofing	**Date:**	6/10/2026
Site:	Edison ES	**Change Order #:**	1
Contract Date:	3/18/2026	**Bid #:**	N.A.
Contractor:	The Garland Company, Inc.	**PO #:**	26002689
Address:	3800 E. 91st Street. Cleveland OH. 44105	**DSA Application #:**	N.A.
		Board Date:	6/25/2026

THE CONTRACT IS CHANGED AS FOLLOWS:

This Deductive Change Order #01 for the Thomas Edison Elementary School is due to removing the roofing of Portable Building Classroom #25, as the building will be removed and replaced with another portable buildings in the future. This deductive change order removes the materials and freight from the original purchase order, which have not been purchased. Original Quote $95,530.24 new quote $88,300.34 = ($7,229.90)	$ (7,229.90)
Total:	**$ (7,229.90)**

ADJUSTMENTS TO CONTRACT			
Original Contract Amount:	$ 95,530.24	Original Contract Completion Date:	
Total Prior Change Orders:	$ -	New Completion Date:	
Contract Sum Prior to this CO:	$ 95,530.24	% for this Change Order	-8%
Amount of this Change Order:	$ (7,229.90)	% Total Cumulative Change Orders	-8%
Revised Contract Amount:	$ 88,300.34		

***SIGNATURES ON PAGE 2**

Bond Management Office
510 S. Shelton St.
Burbank, CA 91506

The undersigned Contractor agrees with the foregoing changes to the Contract price and time allowed for completion of the Work, and agrees to furnish all labor, materials, service, and perform all work necessary to complete any additional work specified herein. Changes to the Contract shall only be effective when approved by the governing board of the District.

It is expressly understood that the value of the extra Work or changes expressly includes any and all of the Contractor's costs and expenses, direct and indirect, resulting from additional time required on the Project or resulting from delay to the Project. Any costs, expenses, damages, or time extensions not included are deemed waived.

Anthony DeMartinis	Anthony DeMartinis	Jun 11, 2026
The Garland Company Inc	Signature	Date
Architect	Signature	Date
Robin Rickman	Robin Rickman	Jun 11, 2026
Robin Rickman, Project Manager	Signature	Date
Oscar Macias	Oscar Macias, Ed.D.	Jun 11, 2026
Oscar Macias, Interum District Superintendent	Signature	Date

***SIGNATURES ON PAGE 2**

Tony DeMartinis
tdemartinis@garlandco.com

QUICK QUOTE

The Garland Company, Inc. ©
3800 East 91st Street
Cleveland, OH 44105
www.garlandco.com

Client:	Burbank USD
Contact:	David Gerharter
Job:	Summer 2026 Roofing Bid 2526-011- Edison ES- REVISED

June 10, 2026

Notes

- CMAS Discount (1%) not shown
- Freight Quote shown is by truck (Rail quote TBD)

Product #	Description	Coverage Rate	Unit Price	Quantity	Total Price
4145-80-P	FlexBase E 80 Polyester/fiberglass reinforced SBS modified bitumen base sheet with Kevlar fibers	100 sq. ft./roll (34' 8" x 3' 3")	$379.00 (EA)	49	$18,571.00
9600	KEE-Stone HP ASTM D 6754 high performance KEE reinforced fleece back roofing membrane (100 FT)	800 sq. ft./roll (8' x 100') (Pkg: ROLL)	$8,400.00 (RL)	7	$58,800.00
				Total Material:	$77,371.00
				Freight Charges:	$2,805.38
				Taxes:	$8,123.96
				Total Price:	**$88,300.34**

This quote incorporates herein by reference the standard Garland Terms and Conditions of Sale located on Garland's website (garlandco.com) and is subject to and governed by such terms.

Printed 01/21/2026 - ***Quote is valid 30 days from this date.***

© 2026 Garland Industries, Inc.

Burbank Unified School
Fiscal Services

REPORT TO THE BOARD

TO:	Members of the Board of Education
FROM:	Jason Hasty, Assistant Superintendent of Business Services
PREPARED BY:	Jason Hasty, Assistant Superintendent of Business Services
SUBMITTED BY:	Terri Ramirez-Adams, Senior Administrative Assistant
DATE:	June 25, 2026
SUBJECT:	Approval of Amendment to the Fiscal Support Services Contract with the Los Angeles County Office of Education (General Fund)

Background:

On March 5, 2026, the Board of Education ratified the Fiscal Support Services contract between the Burbank Unified School District and the Los Angeles County Office of Education (LACOE). The original agreement provided fiscal expert support services for the period of January 1, 2026 through June 30, 2026, in an amount not to exceed $30,000.

Discussion/Issues:

LACOE provides fiscal expert support services to assist the District with budget development, multi-year financial planning, fiscal solvency strategies, and organizational effectiveness. The consultant works in coordination with LACOE and District leadership to identify risks, recommend corrective actions, and support long-term financial sustainability.

Amendment No. 1 extends the term of the original contract through June 30, 2027, and increases the contract amount by $60,000, for a revised total contract amount not to exceed $90,000. The District reimburses LACOE for 75% of the cost of services, as required under county fiscal oversight provisions.

Fiscal Impact:

The original contract amount was not to exceed $30,000. Amendment No. 1 increases the contract amount by $60,000, for a revised total contract amount not to exceed $90,000. Costs will be paid from the General Fund.

Recommendation:

Jason Hasty, Assistant Superintendent of Business Services, recommends that the Board of Education approve the amendment to the Fiscal Support Services contract with the Los Angeles County Office of Education, extending the term through June 30, 2027, and increasing the contract amount by $60,000, for a revised total contract amount not to exceed $90,000 (General Fund), and authorize the Superintendent or designee to execute the amendment pursuant to BUSD-AR 3314, as presented.

C-25638:25:27

LOS ANGELES COUNTY OFFICE OF EDUCATION

AMENDMENT NO. 1
TO
CONTRACT
FOR
FISCAL SUPPORT SERVICES
BUSINESS ADVISORY SERVICES

The LOS ANGELES COUNTY OFFICE OF EDUCATION, a public educational agency, located at 9300 Imperial Highway, Downey, California 90242-2890, hereinafter referred to as "LACOE", and

BURBANK UNIFIED SCHOOL DISTRICT, hereinafter referred to as "District", mutually agree to amend the existing Contract C-25638 as follows:

1. Section 2 – Term of Contract, of the original Contract shall be extended to June 30, 2027.

2. Section 3 – Payment, of the original Contract is hereby amended to increase the amount payable to LACOE from Thirty Thousand Dollars ($30,000.00) by an additional Sixty Thousand Dollars ($60,000.00) for additional services, for a revised total Contract amount not to exceed Ninety Thousand Dollars ($90,000.00). District shall reimburse LACOE for 75% of the cost of services.

This Amendment is effective upon execution. Any dates set forth in the original Contract and/or prior Amendment(s) shall be deemed updated/revised, if necessary, to be compatible with this Amendment. All other terms and conditions of the original Contract and/or prior Amendment(s) shall remain the same.

LOS ANGELES COUNTY
OFFICE OF EDUCATION

By _____
Michael Choi
Administrative Services Officer

Date _____

BURBANK UNIFIED
SCHOOL DISTRICT

By _____

_____
Typed or Printed Name

Title _____

Date _____

ab 5-10
Report 4/29/26

LOS ANGELES COUNTY OFFICE OF EDUCATION

CONTRACT
FOR
FISCAL SUPPORT SERVICES
BUSINESS ADVISORY SERVICES

The LOS ANGELES COUNTY OFFICE OF EDUCATION, a public educational agency, located at 9300 Imperial Highway, Downey, California 90242-2890, hereinafter referred to as "LACOE", and

BURBANK UNIFIED SCHOOL DISTRICT, hereinafter referred to as "District", mutually agree as follows:

1. BASIS OF CONTRACT AND SCOPE OF WORK

LACOE's Division of Business Advisory Services has determined that assistance is required to provide District with Fiscal Expert Services, per Exhibit A - LACOE Contract No. 603980, attached hereto, incorporated herein, and made a part hereof.

LACOE has engaged a third-party to provide the required Fiscal Expert Services. If, in LACOE's judgment, and consistent with the California Education Code Section 42127.6(a)(1)(B), the District's fiscal condition escalates to a level that warrants the appointment of a fiscal advisor, LACOE may appoint such fiscal advisor ("Fiscal Advisor Services") and may expand or modify the existing Fiscal Expert Services Contract accordingly. The District acknowledges and agrees that LACOE has authority to take such actions in connection with its fiscal oversight responsibilities under applicable law.

In the event Fiscal Advisor Services are engaged, the District agrees to reimburse the County Office for all actual and reasonable costs associated with the Fiscal Advisor Services, such costs may be invoiced together with, or separately from, invoices for Fiscal Expert Services, at LACOE's discretion.

2. TERM OF CONTRACT

This Contract is effective January 1, 2026 and shall remain in effect through June 30, 2026.

3. PAYMENT

In accordance with this contract, District shall reimburse LACOE for 75% of the cost of these services, not to exceed Thirty Thousand Dollars ($30,000.00). Payment shall be made at the rate of Two Hundred Fifty Dollars ($250.00) per hour. Charges are based on actual costs incurred and shall be provided to District's Accounts Payable unit. Within 15 days of receipt of each invoice, payment shall be transferred from District to LACOE by journal voucher, for 75% of the invoice amount. Notices of journal voucher transfers shall be provided by LACOE in a timely manner.

4. INDEMNIFICATION

District agrees to defend, indemnify, save, and hold harmless LACOE from and against any and all demands, debts, liens, claims, losses, damages, liability, costs, expenses (including, but not by way of limitation, attorneys fees and costs actually incurred, whether or not litigation has commenced), judgments or obligations, actions, or causes of action whatsoever, for or in connection with injury, damage, or loss (including, but not limited to death) to any person or property unless such injury, damage or loss results from or is connected with the sole negligence or error or omission of LACOE. The provisions of this clause shall not be limited to the availability or collectability of insurance coverage.

LACOE agrees to defend, indemnify, save, and hold harmless the District from and against any and all demands, debts, liens, claims, losses, damages, liability, costs, expenses (including, but not by way of limitation, attorneys fees and costs actually incurred, whether or not litigation has commenced), judgments or obligations, actions, or causes of action whatsoever, for or in connection with injury, damage, or loss (including, but not limited to death) to any person or property unless such injury, damage or loss results from or is connected with the sole negligence or error or omission of the District. The provisions of this clause shall not be limited to the availability or collectability of insurance coverage.

5. INSURANCE

District and LACOE shall acquire and maintain such general liability, property damage, workers' compensation and automobile insurance as is required to protect their interests.

6. NOTICES

Any notices to be given pursuant to this Contract shall be in writing and such notices, as well as any other document to be delivered, shall be delivered by personal service or by deposit in the U.S. Mail, certified or registered, return receipt requested, postage prepaid, and addressed to the party for whom intended as follows:

LACOE:

Procurement Services
LOS ANGELES COUNTY OFFICE OF EDUCATION
9300 Imperial Highway, ECW-169
Downey, CA 90242-2890

DISTRICT:

BURBANK UNIFIED SCHOOL DISTRICT
1900 W. Olive Avenue
Burbank, CA 91506
ATTN: Dr. Jason Hasty

7-10. SECTIONS RESERVED (Intentionally left blank.)

11. COVENANT AGAINST CONTINGENT FEES

District warrants that no person or selling agency has been employed or retained to solicit or secure this Contract upon a Contract or understanding for a commission, percentage, brokerage

or contingent fee, excepting bona fide established commercial or selling agencies retained by the District for the purpose of securing business. For breach or violation of this warranty, LACOE shall have the right to immediate termination of this Contract and, at its sole discretion, deduct from the contract price or consideration, or otherwise recover, the full amount of such commission, percentage, brokerage, or commission fee.

12. EMPLOYEE FINGERPRINTING

During the entire term of the Contract, District, including all subcontractors, shall fully comply with the provisions of the Education Code Section 45125.1.

13. SECTION RESERVED (Intentionally left blank.)

14. ASSIGNMENT

Neither party shall assign this Contract or any of its rights and obligations. If such assignment occurs, it shall be deemed void upon transfer.

15. INTEGRATION

This Contract, including all exhibits and other documents incorporated herein or made applicable by reference, contains the complete and final understanding of the parties' rights, duties and obligations with respect to the transaction discussed in the Contract and supersedes all prior Contracts, understandings and commitments, whether oral or written. This Contract shall not be amended in any way except by a writing expressly purporting to be such an amendment, signed and acknowledged by both of the parties hereto.

16. MODIFICATION

The Contract shall not be modified or amended without mutual written consent of the parties. If any actual or physical deletions or changes appear on the face of the Contract, such deletions or changes shall only be effective if the initials of both contracting parties appear beside such deletion or change.

17. ORDER OF PRECEDENCE

Except as specifically provided elsewhere in this Contract, conflicting, vague and/or ambiguous provisions of this Contract shall prevail in the following order of precedence: (1) the provisions in the body of this Contract, (2) the exhibits of the Contract, if any; (3) all other documents cited in this Contract or incorporated by reference.

18. SEVERABILITY / WAIVER

18.1 If any provision of this Contract is determined to be illegal, unenforceable, or invalid, such act shall in no way affect the validity of any other provision in this Contract.

18.2 No waiver of any provision of this Contract shall be deemed, or shall constitute, a waiver of any other provision, whether or not similar, nor shall any such waiver constitute a continuing or subsequent waiver of the same provision. No waiver shall be binding unless executed in writing by the party making the waiver.

19. AMENDMENTS

The Contract may be amended by mutual written consent of the parties.

20. TERMINATION

The Contract may be terminated by either party upon written notification.

21. FAILURE TO COMPLY

In the event District fails to perform in accordance with the indemnification or insurance requirement clauses of this Contract, makes inaccurate certifications as a part of this contract or contracting process, or otherwise breaches any other clause of this Contract, LACOE, the Los Angeles County Board of Education and the individuals thereof, and all officers, agents, employees, representatives, and volunteers shall be entitled to recover all legal fees, costs, and other expenses incident to securing performance or incurred as a consequence of nonperformance.

22. ATTORNEY'S FEES

Should either party be required to file any legal action or claim to enforce any provision of this Contract or resolve any dispute arising under or connected to this Contract, except as set forth in the "Failure to Comply" in this contract, each party shall bear its own attorney's fees and costs in bringing such an action and any judgment or decree rendered in such a proceeding shall not include an award thereof.

23. COMPLIANCE WITH LAW

District shall comply with all applicable federal, state, and local laws, statutes, ordinances, rules, regulations, policies, and procedures in performing under this Contract. District warrants that it has all licenses, permits, certificates and credentials required by law to perform the work specified under this Contract and shall, upon request by LACOE, provide evidence of same.

24. FORCE MAJEURE

In the event that performance on the part of any party hereto shall be delayed or suspended as a result of circumstances beyond the reasonable control and without the fault or negligence of said party, none of the parties shall incur any liability to the other parties as a result of such delay or suspension. Circumstances deemed to be beyond the control of the parties hereunder shall include, but not be limited to, acts of God or of the public enemy, insurrection, acts of the federal government or any unit of state or local government in sovereign capacity, fires, floods, epidemics, pandemics, quarantine restrictions, strikes, freight embargoes or delays in transportation, to the extent that such circumstances are not caused by the party's willful or negligent acts or omissions, and to the extent that they are beyond the party's reasonable control.

25. GOVERNING LAW/FORUM SELECTION

This Contract is made, entered into and executed in Los Angeles County, California, and the parties agree that any legal action, claim or proceeding arising out of or connected with this Contract shall be filed in the applicable court in Los Angeles County, California. The parties further agree this Contract shall be construed, and all disputes hereunder shall be settled, in accordance with the laws of the State of California.

26. INCORPORATION BY REFERENCE

Any exhibits referenced herein shall be incorporated and made a part of this Contract.

27. PROVISIONS REQUIRED BY LAW DEEMED INSERTED

Each and every provision of law and clause required by law to be inserted in this contract shall be deemed to be inserted herein and the contract shall be read and enforced as though it were so inserted and included.

28. RECORD RETENTION AND INSPECTION

District agrees that LACOE shall have access to and the right to examine, audit, excerpt, copy or transcribe any pertinent records pertaining to this Contract. All records shall be kept and maintained by District and made available to LACOE during the entire term of this Contract and for a period not less than five (5) years after final payment hereunder by LACOE.

29. NO THIRD-PARTY OBLIGATIONS

The execution and delivery of this Contract shall not be deemed to confer any rights upon, nor obligate any parties thereto, to any person or entity other than the parties hereto.

30. NON-DISCRIMINATION AND NON-SEGREGATION

During the performance of this Contract, both parties hereby agrees to comply with all Federal, state and local laws respecting non-discrimination in employment and non-segregation of facilities including, but not limited to requirements set out in 41 CFR 60-1.4, 60-250.4 and 60-741.4, which equal opportunity clauses are hereby incorporated by reference.

31. TOBACCO AND MARIJUANA-FREE WORKPLACE

When at LACOE-owned or LACOE–leased buildings, both parties hereby agree to comply with the Los Angeles County Board of Education's Policy 3513.3 which states: The Los Angeles County Board of Education recognizes the health hazards associated with smoking and the use of tobacco and marijuana products, including the breathing of second-hand smoke, and desires to provide a healthy environment for students and staff. The County Board prohibits the use of tobacco and marijuana products at any time in Los Angeles County Office of Education-owned or leased buildings, on LACOE property and in LACOE vehicles. This includes the use of an electronic smoking device that creates aerosol or vapor or of any oral smoking device for the purpose of circumventing the prohibition of smoking.

32. ALCOHOL AND DRUG-FREE WORKPLACE

Both parties hereby certify under penalty of perjury under the laws of the State of California that District will comply with the requirements of the Drug-Free Workplace Act of 1990 (Government Code Section 8350 et. seq.), and the Los Angeles County Board of Education's Alcohol and Drug-Free Workplace Policy 4020.

33. CERTIFICATION REGARDING DEBARMENT, SUSPENSION OR OTHER INELIGIBILITY (Federal Executive Order 12549)

By executing this contractual instrument, District certifies to the best of its knowledge and belief that it and its principals:

33.1 Are not presently debarred, suspended, proposed for debarment, declared ineligible, or voluntarily excluded from covered transactions by any Federal Department or Agency;

33.2 Have not, within a three-year period preceding the execution of this contractual instrument, been convicted of, or had a civil judgment rendered against them, for: commission of fraud or a criminal offense in connection with obtaining, attempting to obtain, or performing a public transaction (Federal, State or Local) or contract under a public transaction; or violation of Federal or State antitrust statutes; or commission of embezzlement, theft, forgery, bribery, falsification or destruction of records, making false statements, or receiving stolen property;

33.3 Are not presently indicted for, or otherwise criminally or civilly charged by any government entity (Federal, State or Local), with commission of any of the offenses enumerated in Section 33.2 above, of this certification; and,

33.4 Have not, within a three-year period preceding the execution of this contractual instrument, had one or more public transactions (Federal, State or Local) terminated for cause of default.

34. EXECUTION REQUIREMENTS

Proper signatures required for execution of this instrument may be by original signature; photocopy; fax/facsimile copy; valid, encrypted, electronic transmission/signature; and/or other commonly accepted, widely used, commercially acceptable signature methods. This instrument may be executed in counterparts by each party on a separate copy thereof with the same force and effect as though all parties had executed a single original copy.

LOS ANGELES COUNTY
OFFICE OF EDUCATION

By _____
Lilibeth Morelos
Procurement Services Coordinator

Date _____

ab 1/15
Report 1/14/26

BURBANK UNIFED
SCHOOL DISTRICT

By _____
Oscar Macias
Typed or Printed Name

Title Interim Assistant Superintendent

Date 3/5/26

EXHIBIT A

CONTRACT NO. 603980:25:26

BETWEEN
LOS ANGELES COUNTY OFFICE OF EDUCATION
AND
RICHARD HOLASH
FOR
FISCAL EXPERT SERVICES
BUSINESS ADVISORY SERVICES

THIS CONTRACT is made and entered into by and between the LOS ANGELES COUNTY OFFICE OF EDUCATION, a public educational agency, located at 9300 Imperial Highway, Downey, California 90242-2890, hereinafter referred to as "LACOE" and

RICHARD HOLASH, whose mailing address is [redacted], hereinafter referred to as "Contractor".

PREMISES:

A. LACOE has determined that it requires assistance with fiscal expert services for Burbank Unified School District.

B. Contractor asserts that it has the required background, training, and expertise to perform the work to be done and agrees to do so in accordance with the terms and conditions of this Contract. All work shall be coordinated with LACOE's Director of Business Advisory Services, Octavio Castelo or his designee.

1. BASIS OF CONTRACT AND SCOPE OF WORK

1.1 Scope of Work. The Contractor shall, in a manner satisfactory to LACOE, perform the services as set forth in Exhibit A – Role of Fiscal Expert, and Exhibit B – Scope of Work, attached hereto, incorporated herein, and made a part hereof. The Contractor shall also submit written status report bi-weekly to LACOE's Director of Business Advisory Services.

1.2 Additional Work. Any work performed by the Contractor beyond that authorized in Subsection 1.1 above, must be approved in advance and in writing by LACOE, and such approved work shall be considered "Additional Work" under this Contract. Any such approval of Additional Work by LACOE, as well as any other material change in the terms and conditions of this Contract, shall only be binding upon either party if confirmed in a written amendment to this Contract executed by both parties.

2. TERM OF CONTRACT

This Contract shall begin on January 1, 2026 and continue in full force and effect through June 30, 2026 unless early termination occurs in accordance with the terms of this Contract or extended by written amendment to this Contract.

3. PAYMENT AND MAXIMUM OBLIGATION

3.1 Payment. For the Contractor's full and complete performance of its obligations under this Contract, LACOE shall pay Contractor an amount not to exceed Thirty Thousand Dollars ($30,000.00). Payment shall be made at the rate of Two Hundred Fifty Dollars ($250.00) per hour for work performed, not to exceed 120 hours.

3.2 Invoices. The Contractor shall e-mail invoices to Castelo_Octavio@LACOE.edu for payment in arrears of work being performed. The Contractor's invoices shall specify the following: (1) description of work and location where work was performed; (2) dates of work performance and hours of work performed; (3) total amount due and payable; (4) itemized expenses included in the monthly fee; and (5) contract number. Contractor shall also include monthly documentation for service performed.

3.3 Maximum Payment Obligation. Notwithstanding any other provision of this Contract to the contrary, the amount listed above Subsection 3.1 is LACOE's maximum (cumulative) payment obligation to the Contractor under this Contract, including all amounts payable to the Contractor for its costs arising from, or due to termination of, this Contract.

4. INDEMNIFICATION

4.1 The Contractor agrees to defend, indemnify, save and hold harmless LACOE from and against any and all demands, debts, liens, claims, losses, damages, liability, costs, expenses (including, but not by way of limitation, attorney's fees and costs actually incurred, whether or not litigation has commenced), judgments or obligations, action, or causes of actions whatsoever, for or in connection to: (1) bodily injury or property damage (including, but not limited to, death) sustained or claimed to have been sustained by any person or persons, or corporation, or public or private entity (including LACOE) arising out of, or incidental to, or occurring as a result of any negligence of the Contractor or the negligence of any subcontractor, agent, firm, agency, organization or business retained, engaged, selected, managed or monitored by the Contractor relating to services or operations performed in execution of this Contract; and (2) injury, damage or loss sustained or claimed to have been sustained by any person or persons, or corporation, or public or private entity (including LACOE) arising out of, or incidental to, or occurring as a result of, any error or omission of the Contractor, or any error or omission of any subcontractor, agent, firm, agency organization or business retained, engaged, selected, managed or monitored by the Contractor relating to the performance or nonperformance of services or operations pertaining to this Contract.

4.2 The Contractor further agrees to waive all rights of subrogation against LACOE for all losses, costs and expenses (including, but not by way of limitation, attorney's fees and other related legal costs) arising out of any liability or claim of liability for injury (including death), damage, or loss sustained or claimed to have been sustained arising out of, or incidental to, or occurring as a result of LACOE's performance or failure to perform services, duties and other obligations pertaining to this Contract.

4.3 The provisions of this indemnification clause shall not be limited to the availability or collectability of insurance coverage.

5. INSURANCE

5.1 Without limiting the Contractor's, its officers', agents', employees', subcontractors', representatives' and volunteers' (collectively hereinafter in this Section referred to as Contractor's) indemnification of LACOE, its governing boards and commissions and the individuals thereof, and all its officers, agents, employees, representatives and volunteers (collectively hereinafter in this Section referred to as LACOE), and as a material condition of this Contract, the Contractor shall procure and maintain at its sole expense, and shall require and cause all of its subcontractors and independent contractors to procure and maintain without expense to LACOE, insurance as required below for the duration of this Contract and any extended period specified. All insurance policies shall be placed with insurers admitted in the State of California and having an A.M. Best rating of not less than A:IX.

5.2 Minimum Scope and Limits of Insurance

5.2.1 Professional Liability Coverage for errors and omissions with a limit of liability of not less than $1,000,000 each claim. If the policy is written on a claims made form, such insurance shall be endorsed to provide an extended reporting period of not less than one year following termination of this Contract.

5.2.2 Automobile Liability Coverage with limits as required by the State of California.

5.3 Endorsements

The Contractor shall furnish LACOE with certificates of insurance evidencing insurance coverage for commercial general liability, automobile liability, professional liability and workers' compensation, with an additional insured endorsement showing that LACOE, its Officers, Agents, Employees, Volunteers, and Board is named as an additional insured as to commercial general liability. The certificates and endorsements are to be signed by a person employed and authorized by the insurer to bind coverage on its behalf and shall specifically reference this Contract. The certificates of insurance and endorsements are to be received by LACOE prior to full execution of this Contract. LACOE reserves the right to require complete, certified copies of all required insurance policies at any time.

Certificates of insurance may be uploaded to LACOE's third party insurance compliance contractor, MyCOI.

5.4 Other Insurance Provisions

The Contractor shall cause its insurance policies to be amended to state the following:

5.4.1 The Contractor's insurance coverage shall be primary insurance with respects

to LACOE. Any insurance or self-insurance maintained by LACOE shall be in excess of the Contractor's insurance and shall not contribute to it.

5.4.2 All rights of subrogation against LACOE for injury (including death), damage or loss arising from performance or nonperformance of LACOE pertaining to this Contract are waived.

5.4.3 Coverage shall not be suspended, voided, canceled or reduced in coverage or in limits except after thirty (30) calendar days' prior written notice by certified mail, return receipt requested, has been given to LACOE.

5.4.4 Contractor shall be obligated to renew its insurance policies as necessary and to provide new certificates of insurance from time to time, so that LACOE is continuously in possession of evidence of the Contractor's insurance in accordance with the foregoing provisions.

6. NOTICES

Any notices to be given pursuant to this Contract shall be in writing and such notices, as well as any other document to be delivered, shall be delivered by personal service or by deposit in the U.S. Mail, certified or registered, return receipt requested, postage prepaid, and addressed to the party for whom intended as follows:

To LACOE:
Procurement Services
LOS ANGELES COUNTY OFFICE OF EDUCATION
9300 Imperial Highway, ECW-157
Downey, CA 90242-2890

To Contractor:
RICHARD HOLASH
[redacted]

7-10. SECTIONS RESERVED (Intentionally left blank.)

11. COVENANT AGAINST CONTINGENT FEES

Contractor warrants that no person or selling agency has been employed or retained to solicit or secure this Contract upon a Contract or understanding for a commission, percentage, brokerage or contingent fee, excepting bona fide established commercial or selling agencies retained by Contractor for the purpose of securing business. For breach or violation of this warranty, LACOE shall have the right to immediate termination of this Contract and, at its sole discretion, deduct from the contract price or consideration, or otherwise recover, the full amount of such commission, percentage, brokerage, or commission fee.

12. FINGERPRINTING

During the entire term of the Contract, the Contractor, including all subcontractors, shall fully comply with the provisions of the Education Code Section 45125.1 and AB 130.

13. INDEPENDENT CONTRACTOR

While performing its obligations under this Contract, Contractor is an Independent Contractor and not an officer, employee or agent of LACOE. Contractor shall not at any time or in any manner represent that it or any of its officers, employees, or agents are employees of LACOE. Contractor warrants its compliance with the criteria established by the U.S. Internal Revenue Service (I.R.S.) and the California Employment Development Department (EDD) for qualification as an Independent Contractor including, but not limited to, being hired on a temporary basis, having some discretion is scheduling time to complete contract work, working for more than one employer at a time, and acquiring and maintaining its own office space and equipment.

14. ASSIGNMENT OR TRANSFER

The Contractor shall not in any manner, directly or indirectly, by operation of law or otherwise, assign, transfer or encumber this Contract or any portion hereof of any interest herein, in whole or in part, without the prior written consent of LACOE. If prior written consent is not given by LACOE to assign, transfer, or encumber this Contract, such action shall be deemed automatically void. In addition, the Contractor shall not subcontract the work to be performed pursuant to this Contract without prior written approval of LACOE. The names and qualifications of subcontractors or others whom Contractor intends to employ, other than those identified, shall be submitted to LACOE for prior written approval.

15. INTEGRATION

This Contract, including all exhibits and other documents incorporated herein or made applicable by reference, contains the complete and final understanding of the parties' rights, duties and obligations with respect to the transaction discussed in the Contract and supersedes all prior Contracts, understandings and commitments, whether oral or written. This Contract shall not be amended in any way except by a writing expressly purporting to be such an amendment, signed and acknowledged by both of the parties hereto.

16. MODIFICATION

The Contract shall not be modified or amended without mutual written consent of the parties. If any actual or physical deletions or changes appear on the face of the Contract, such deletions or changes shall only be effective if the initials of both contracting parties appear beside such deletion or change.

17. ORDER OF PRECEDENCE

Except as specifically provided elsewhere in this Contract, conflicting, vague and/or ambiguous provisions of this Contract shall prevail in the following order of precedence: (1) the provisions in the body of this Contract, (2) the exhibits of the Contract, if any; (3)

all other documents cited in this Contract or incorporated by reference.

18. SEVERABILITY / WAIVER

18.1 If any provision of this Contract is determined to be illegal, unenforceable, or invalid, such act shall in no way affect the validity of any other provision in this Contract.

18.2 No waiver of any provision of this Contract shall be deemed, or shall constitute, a waiver of any other provision, whether or not similar, nor shall any such waiver constitute a continuing or subsequent waiver of the same provision. No waiver shall be binding unless executed in writing by the party making the waiver.

19. AMENDMENTS

The Contract may be amended by mutual written consent of the parties.

20. TERMINATION

20.1 Scope.

LACOE may at any time terminate this Contract, in whole or part, for the convenience of LACOE (see "Termination for Convenience" Section below) or for default by the Contractor (see "Termination for Default" Section below) by giving the Contractor a written "Notice of Termination."

Immediately upon any termination, Contractor shall stop work and take all reasonable steps to not incur additional costs associated with this Contract, except those costs necessary to close-out business on this Contract. Additional costs shall be reviewed by LACOE and must be deemed allowable before payment is made.

The rights and remedies of LACOE set forth in this "Termination" Section shall not be exclusive and are in addition to any other rights and remedies provided by law or under this Contract.

20.2 Termination for Convenience.

If LACOE elects to terminate this Contract for its convenience, such termination shall be effective upon delivery of said Notice of Termination to the Contractor, unless a later date is specified in the Notice of Termination. Thereafter, LACOE shall pay the Contractor for services provided through the date of termination and for those allowable costs determined by LACOE to be reasonably necessary to effect such termination. Thereafter, the Contractor shall have no further claims against LACOE under this Contract.

20.3 Termination for Default

LACOE may terminate this Contract for reason of the Contractor's default if: (a) a federal or state proceeding for the relief of debtors is undertaken by or against the

Contractor; or, (b) a receiver or trustee is appointed for the Contractor; or, (c) the Contractor makes an assignment for the benefit of its creditors; or, (d) the Contractor becomes insolvent, which shall be deemed to have occurred if the Contractor has ceased to pay its debts in the ordinary course of business or cannot pay its debts as they become due, whether or not the Contractor has committed an act of bankruptcy or is considered insolvent within the meaning of the federal bankruptcy law; or, (e) the Contractor breaches any material term or violates any material provision of this Contract and does not cure such breach or violation within ten (10) calendar days after delivery by LACOE of a written "Notice to Cure Deficiency."

If LACOE elects to terminate this Contract for Default, such termination shall be effective upon delivery of said Notice of Termination to the Contractor, unless a later date is specified in the Notice of Termination. Thereafter, LACOE shall pay the Contractor for services provided through the date of termination and for those allowable costs determined by LACOE to be reasonably necessary to effect such termination. Thereafter, the Contractor shall have no further claims against LACOE under this Contract.

21. FAILURE TO COMPLY

In the event Contractor fails to perform in accordance with the indemnification or insurance requirement clauses of this Contract, makes inaccurate certifications as a part of this contract or contracting process, or otherwise breaches any other clause of this Contract, LACOE, the Los Angeles County Board of Education and the individuals thereof, and all officers, agents, employees, representatives, and volunteers shall be entitled to recover all legal fees, costs, and other expenses incident to securing performance or incurred as a consequence of nonperformance.

22. ATTORNEY'S FEES

Should either party be required to file any legal action or claim to enforce any provision of this Contract or resolve any dispute arising under or connected to this Contract, except as set forth in the “Failure to Comply” in this contract, each party shall bear its own attorney's fees and costs in bringing such an action and any judgment or decree rendered in such a proceeding shall not include an award thereof.

23. COMPLIANCE WITH LAW

Contractor shall comply with all applicable federal, state, and local laws, statutes, ordinances, rules, regulations, policies, and procedures in performing under this Contract. Contractor warrants that it has all licenses, permits, certificates and credentials required by law to perform the work specified under this Contract and shall, upon request by LACOE, provide evidence of same.

24. FORCE MAJEURE

In the event that performance on the part of any party hereto shall be delayed or suspended as a result of circumstances beyond reasonable control and without the fault or negligence of said party, none of the parties shall incur any liability to the other parties as a result of such

delay or suspension. Circumstances deemed to be beyond the control of the parties hereunder shall include, but not be limited to, acts of God or of the public enemy, insurrection, acts of the federal government or any unit of state or local government in sovereign capacity, fires, floods, epidemics, pandemics, quarantine restrictions, strikes, freight embargoes or delays in transportation, to the extent that such circumstances are not caused by the party's willful or negligent acts or omissions, and to the extent that they are beyond the party's reasonable control.

25. GOVERNING LAW/FORUM SELECTION

This Contract is made, entered into and executed in Los Angeles County, California, and the parties agree that any legal action, claim or proceeding arising out of or connected with this Contract shall be filed in the applicable court in Los Angeles County, California. The parties further agree this Contract shall be construed, and all disputes hereunder shall be settled, in accordance with the laws of the State of California.

26. INCORPORATION BY REFERENCE

Any exhibits referenced herein shall be incorporated and made a part of this Contract.

27. PROVISIONS REQUIRED BY LAW DEEMED INSERTED

Each and every provision of law and clause required by law to be inserted in this contract shall be deemed to be inserted herein and the contract shall be read and enforced as though it were so inserted and included.

28. RECORD RETENTION AND INSPECTION

Contractor agrees that LACOE shall have access to and the right to examine, audit, excerpt, copy or transcribe any pertinent records pertaining to this Contract. All records shall be kept and maintained by Contractor and made available to LACOE during the entire term of this Contract and for a period not less than five (5) years after final payment hereunder by LACOE.

29. NO THIRD-PARTY OBLIGATIONS

The execution and delivery of this Contract shall not be deemed to confer any rights upon, nor obligate any parties thereto, to any person or entity other than the parties hereto.

30. LACOE BUDGET/GRANT FUNDS CONTINGENCY

If any portion(s) of LACOE’s financial budget affecting the contractual time period of this agreement does not appropriate sufficient funds for these contracted services and/or related programs, or if grant funds related to these contracted services and/or related programs are not available for any reason whatsoever, this agreement shall be of no further force and effect. In this event, LACOE shall have no liability to pay any funds to Contractor under this agreement, and the Contractor shall not be obligated to perform any provisions of this agreement.

In such instances, particularly when partial funding remains available, LACOE shall have the option to either terminate this agreement with no liability occurring to LACOE, or LACOE may offer an amendment to this agreement to reflect the reduced availability of funds.

31. NON-DISCRIMINATION AND NON-SEGREGATION

During the performance of this Contract, both parties hereby agrees to comply with all Federal, state and local laws respecting non-discrimination in employment and non-segregation of facilities including, but not limited to requirements set out in 41 CFR 60-250.4 and 60-741.4, which equal opportunity clauses are hereby incorporated by reference, including, but not limited to the following:

31.1 Employment

The Contractor shall ensure fairness in the manner that applications are accepted and employees are treated during employment without regard to their race, color, religion, age, sex, ancestry, disability, or national origin. Such action shall include, but may not be limited to the following: employment, upgrading, demotion or transfer; recruitment or recruitment advertising; layoff or termination; rates of pay or other forms of compensation; and selection for training, including apprenticeship. Contractor shall post in conspicuous places, available to employees and applicants for employment, notices to be provided by the State setting forth the provisions of the Fair Employment Practices Act.

31.2 Civil Rights Act

Contractor hereby assures that it will comply with Subchapter VI of the Civil Rights Act of 1964, USC Sections 2000 e (17), to the end that no person shall, on the grounds of race, creed, color, sex, age, or national origin be excluded from participation in, be denied the benefits of, or be otherwise subjected to discrimination under this Contract or under any project, program, or activity supported by this Contract.

31.3 Section 504

Contractor hereby assures that it will comply with Section 504 of the Rehabilitation Act of 1973 with regard to federal financial assistance administered by the Department of Health and Human Services and the Americans with Disabilities Act (ADA) of 1990; and other applicable nondiscrimination laws.

31.4 Small Businesses, Firms Owned by Minority/Women/ Disabled

It is LACOE's desire that small businesses and businesses owned and controlled by women, minorities and persons with disabilities shall have the maximum practicable opportunity to participate in this Contract.

32. TOBACCO AND MARIJUANA-FREE WORKPLACE

When at LACOE-owned or LACOE–leased buildings, both parties hereby agree to comply

with the Los Angeles County Board of Education's Policy 3513.3 which states: The Los Angeles County Board of Education recognizes the health hazards associated with smoking and the use of tobacco and marijuana products, including the breathing of second-hand smoke, and desires to provide a healthy environment for students and staff. The County Board prohibits the use of tobacco and marijuana products at any time in Los Angeles County Office of Education-owned or leased buildings, on LACOE property and in LACOE vehicles. This includes the use of an electronic smoking device that creates aerosol or vapor or of any oral smoking device for the purpose of circumventing the prohibition of smoking.

33. ALCOHOL AND DRUG-FREE WORKPLACE

Both parties hereby certify under penalty of perjury under the laws of the State of California that Contractor will comply with the requirements of the Drug-Free Workplace Act of 1990 (Government Code Section 8350 et. seq.), and the Los Angeles County Board of Education's Alcohol and Drug-Free Workplace Policy 4020.

34. CERTIFICATION REGARDING DEBARMENT, SUSPENSION OR OTHER INELIGIBILITY (Federal Executive Order 12549)

By executing this contractual instrument, Contractor certifies to the best of its knowledge and belief that it and its principals:

34.1 Are not presently debarred, suspended, proposed for debarment, declared ineligible, or voluntarily excluded from covered transactions by any Federal Department or Agency;

34.2 Have not, within a three-year period preceding the execution of this contractual instrument, been convicted of, or had a civil judgment rendered against them, for: commission of fraud or a criminal offense in connection with obtaining, attempting to obtain, or performing a public transaction (Federal, State or Local) or contract under a public transaction; or violation of Federal or State antitrust statutes; or commission of embezzlement, theft, forgery, bribery, falsification or destruction of records, making false statements, or receiving stolen property;

34.3 Are not presently indicted for, or otherwise criminally or civilly charged by any government entity (Federal, State or Local), with commission of any of the offenses enumerated in Section 34.2 above, of this certification; and,

34.4 Have not, within a three-year period preceding the execution of this contractual instrument, had one or more public transactions (Federal, State or Local) terminated for cause of default.

35. EXECUTION REQUIREMENTS

Proper signatures required for execution of this instrument may be by original signature; photocopy; fax/facsimile copy; valid, encrypted, electronic transmission/signature; and/or other commonly accepted, widely used, commercially acceptable signature methods. This instrument may be executed in counter-parts by each party on a separate copy thereof with the same force and effect as though all parties had executed a single original copy.

37. RETIREMENT REPORTING

Contractor must disclose to LACOE if the Contractor or any of its employees working under this contract have retired from the California State Teachers' Retirement System ("CALSTRS") or the California Public Employees' Retirement System ("CALPERS"). Pursuant to California Education Code section 24214 and 24214.5, there are postretirement limitations on earnings if Contractor's employees have retired from CALSTRS and hours worked limitations if Contractor's employees have retired from CALPERS. If Contractor's employees have retired from either CALSTRS or CALPERS, Contractor should be aware that LACOE is required to report all payments under this and any additional agreements in any given year.

LOS ANGELES COUNTY
OFFICE OF EDUCATION

DD
Daniel Ding

By Sheila Robinson (Jan 12, 2026 17:08:34 PST)
Sheila Robinson
Procurement Services Coordinator

Date 01/12/2026

ab 1/8
Report 1/14/26

RICK HOLASH

By Richard M Holash (Jan 12, 2026 16:46:25 PST)

Date 01/12/2026

EXHIBIT A - ROLE OF FISCAL EXPERT

Under certain conditions, the County Superintendent of Schools (County Superintendent) can assign a Fiscal Expert, paid for by the County Superintendent, to advise a district on its financial/governance problems. The choice of a Fiscal Expert must be tailored to meet the needs of the particular district. The individual must be able to work well in a highly politicized and volatile environment, with expertise in a wide variety of school finance matters.

Any individual serving in this role must be able to understand the interactions of all school district functions, and must also be able to review and understand the day-to-day business detail and its implications. Must be able to identify and prioritize the problems and practical options for solutions. Must have excellent communication skills and the ability to guide district staff on a short-term basis.

Role:

As the representative of the Los Angeles County Office of Education (County Office), the Fiscal Expert shall:

- Assess the scope and depth of the district's fiscal difficulties.
- Determine the cause(s) and necessary corrective action(s).
- Keep the County Superintendent up-to-date on their progress.
- Remain neutral and objective. Fiscal Expert will not align himself with any one faction (i.e., superintendent, board, staff) over the other, but work with all proactively and objectively.
- Serve as a resource to the superintendent, board and staff. The Fiscal Expert does not work for the board.
- Assess the current staff's capabilities, and brief the County Office and superintendent
- Maintain a close working relationship with the County Office via the County Office Business Services staff.
- Take a supporting role in the development and administration of the district budget.
- Prospectively review all information and data submitted to the County Office or other agencies and ensure that validation of data has occurred. This may be assigned to the auditor depending upon the circumstances.
- Amount of time spent in district: full time at first, then may be decreased depending on the needs. Maintain district hours.

Revised: 10-16-18

EXHIBIT B – SCOPE OF WORK

Contractor: Richard M. Holash

Agency: Los Angeles County Office of Education (LACOE) / Burbank Unified School District (BUSD)

I. CONTRACT TERMS & LOGISTICS

- **Term:** The term of this agreement shall be from **January 1, 2026, to June 30, 2026**.
- **Compensation:** Services shall be billed at a rate of **$250 per hour**, not to exceed a total contract maximum of **$30,000**.
- **Onsite Presence:** The Contractor will be onsite at the school district at least once per week.
- **Meeting Attendance:** The Contractor will attend all scheduled Governing Board meetings, including closed sessions.
- **Confidentiality & Access:** At no time will the Contractor have access to:
  - Individual student or employee records.
  - Direct access to financial or management software.
  - Any unauthorized or unsupervised interaction with students.
- **Amendments:** This contract may only be amended by the written agreement of both parties.

II. PROFESSIONAL DUTIES & RESPONSIBILITIES

The Contractor shall serve as the **County Office Fiscal Expert** to Burbank Unified School District. Duties include, but are not limited to:

Fiscal Oversight & Guidance

- Provide expert guidance on a project basis by reviewing and providing recommendations regarding fiscal issues, concerns, and overall organizational effectiveness.
- Review and consider all studies, reports, evaluations, or audits that contain evidence of fiscal distress.
- Meet with appropriate district staff and the County Superintendent to assess fiscal health and communicate findings/progress on fiscal improvements.

Financial Planning & Solvency

- Assist in developing or revising a multi-year financial plan to ensure the district meets future financial obligations.
- Analyze and evaluate the district's budget to support the fiscal impact of proposed increases in compensation.
- Identify projected budgetary shortfalls over the term of negotiated agreements and provide recommendations for potential expenditure reductions or budget-balancing solutions.

Technical Assistance & Support

- Provide technical assistance, professional development, and advice in operational areas to assist in maintaining future solvency.
- Provide additional assistance and support as requested by the County Superintendent, the Los Angeles County Office of Education, or the State Superintendent of Public Instruction (SPI).

District Contact:
Octavio Castelo
LT Executive Director Advisory Services
Telephone No. (562) 922-6131
Castelo_Octavio@lacoe.edu

Consultant Contact:
Richard Holash
[redacted]

BURBANK UNIFIED SCHOOL DISTRICT
Business Services

REPORT TO THE BOARD

TO:	Members of the Board of Education
FROM:	Business Services
PREPARE BY:	Terri Ramirez-Adams, Senior Administrative Secretary
SUBMITTED BY:	Terri Ramirez-Adams, Senior Administrative Secretary
DATE:	June 25, 2026
SUBJECT:	Approval of Amendment to the Los Angeles County Office of Education (LACOE) BEST Advantage and HRS System Maintenance and Support Contract 2025-2030

Background:

The Los Angeles County Office of Education (LACOE) provides financial system services to districts for the purpose of financial reporting, payroll, human resources, budget, and related system support.

On June 18, 2025, the Board of Education approved the LACOE BEST Advantage and HRS System Maintenance and Support Contract for the 2025-2030 fiscal years. The contract provides the District with continued access to the BEST Advantage Enterprise Resource Planning (ERP) System and the Human Resource System (HRS), including maintenance and support services.

Discussion/Issues:

LACOE has issued Amendment No. 1 to the District's existing contract to provide the Fiscal Year 2026-2027 Exhibits A, B, and C rates, pursuant to the terms of the original agreement. The amendment reflects updated rates for the 2026-2027 fiscal year, including the annual Consumer Price Index (CPI) adjustment.

Due to the federal government shutdown of 2025, the October 2025 CPI for the Greater Los Angeles-Anaheim area was not published. LACOE used a 3.5% CPI adjustment, based on the September 2024 to September 2025 CPI change, to update the Fiscal Year 2026-2027 rates.

The amended Fiscal Year 2026-2027 system charges include BEST Advantage Budget & Financial maintenance and support, BEST Advantage HCM/HRS payroll and human resources maintenance and support, and the contribution for future enhancements, software upgrades, and cybersecurity improvements.

Fiscal Impact:

FY2025-2026	
BEST Advantage System Budget & Financial (BUD & FIN)	$26,910
BEST Advantage (HCM), or HRS, System Payroll & Human Resources	$84,991

Contribution for Future Enhancements, Software Upgrades, and Cyber Security Improvements Annual Incremental Percentage 25%	$27,975
Total System Charges	**$139,876**

Recommendation:

Business Services, recommends that the Board of Education approve amendment to the agreement between Burbank Unified School District and Los Angeles County Office of Education (LACOE) for the BEST Advantage System, not to exceed $139,876 for fiscal year 2026-27 (01.0-00000.0-00000-77000-5890-0000000), effective, July 1, 2025 through June 30, 2030, and that authority to sign the agreement be exercised pursuant to BUSD—AR 3314, as presented.

FY26-27 NOTICE TO CONTRACT FOR BEST ADVANTAGE AND HRS SYSTEM MAINTENANCE AND SUPPORT FISCAL YEAR 2025-2030

The LOS ANGELES COUNTY OFFICE OF EDUCATION, a public education agency, located at 9300 Imperial Highway, Downey, California 90242-2890, hereinafter referred to as "LACOE," hereby notifies Burbank Unified School District (#64337), hereinafter referred to as "LEA", the fiscal year FY26-27 Exhibits A, B and C rates, per terms in the original Contract #C-25112, as follows:

Per section 5.1 of the original Contract, by July 1st of each fiscal year, LACOE will provide LEA with revised exhibits to notify them of the following fiscal year's rates. The costs specified in Exhibits A, B and C shall be subject to an annual adjustment based on the CPI for All-Urban CPI for the Greater Los Angeles – Anaheim area, from October of two years prior to October of the previous year, as published by the California Department of Industrial Relations.

Due to the federal government shutdown of 2025, October 2025 CPI for the Greater Los Angeles – Anaheim area was not published. The area's CPI adjustment from September 2024 to September 2025 was 3.5%, and from November 2024 to November 2025 was 3.6%. FY26-27 Exhibits A, B and C are attached hereto, incorporated herein and made a part hereof, reflect a 3.5% increase in rates (rounded).

Los Angeles County
Office of Education

CONTRACT FOR
BEST ADVANTAGE AND HRS SYSTEM MAINTENANCE AND SUPPORT
Fiscal Year 2026-27

EXHIBIT A #2

LEA Name: Burbank Unified School District
LEA Number: 64337

<table>
<tr>
<td>BEST Advantage System Budget & Financial (BUD & FIN)
Maintenance Service and Support Charges

Interface LEA (ADA based on FY 2023-24 P2): 13,456
<table>
<tr><th>From (ADA)</th><th>To (ADA)</th><th>Band</th><th>Annual</th></tr>
<tr><td>1</td><td>14,999</td><td>1</td><td>$ 26,910</td></tr>
<tr><td>15,000</td><td>19,999</td><td>2</td><td>$ 40,365</td></tr>
<tr><td>20,000</td><td>24,999</td><td>3</td><td>$ 52,785</td></tr>
<tr><td>25,000</td><td>99,000</td><td>4</td><td>$ 99,360</td></tr>
<tr><td>100,000</td><td>+</td><td>5</td><td>$133,515</td></tr>
</table>
Non-ADA LEA Charges: $5,175 flat rate.</td>
<td>$26,910</td>
</tr>
<tr>
<td>BEST Advantage (HCM), or HRS, System Payroll & Human Resources
Maintenance Service & Support Charges

2023 W2s (utilized for the five-year contract): 2,793
Rate per W2 (adjusted annually for CPI): $30.43</td>
<td>$84,991</td>
</tr>
<tr>
<td>Contribution for Future Enhancements, Software Upgrades, and Cybersecurity Improvements

Annual Incremental Percentage: 25%</td>
<td>$27,975</td>
</tr>
<tr>
<td>Total FY 2026-2027 System Charges</td>
<td>$139,876</td>
</tr>
</table>

Los Angeles County
Office of Education

CONTRACT FOR
BEST ADVANTAGE AND HRS SYSTEM MAINTENANCE AND SUPPORT
NEW SYSTEM MODULES
(One-Time Costs, As Applicable)
Fiscal Year 2026-27

EXHIBIT B

LEA Name: Burbank Unified School District
LEA Number: 64337

Module	ADA 1 to 14,999	ADA 15,000 to 29,999
Fixed Assets	$6,262	$9,522
Accounts Receivable	$7,142	$7,142
Procurement:	$0	$0
Purchase Orders only	$11,903	$17,595
Requisitions only	$7,763	$10,868
Purchase Orders & Requisition	$19,562	$28,463
Inventory	$16,043	$23,288

Note:
Districts with 30,000 and greater ADA will require a separate discussion.

If other one-time or specific financial system services are needed beyond those mentioned above, the LEA shall discuss their needs with LACOE's Division of School Business Systems Support to determine the cost to be charged.

Los Angeles County
Office of Education

CONTRACT FOR
BEST ADVANTAGE AND HRS SYSTEM MAINTENANCE AND SUPPORT
ABOVE-BASELINE SERVICES
(As Applicable)
Fiscal Year 2026-27

EXHIBIT C

LEA Name: Burbank Unified School District
LEA Number: 64337

ENTRIES, CORRECTIONS, OR REPETITIVE ENTRIES LACOE may assess reasonable fees for entries, corrections, or repetitive entries into the CalPERS and CalSTRS reporting systems that result from audits performed by CalPERS, CalSTRS, LACOE, LEA, or other agencies. A first-time notice of error will not initiate a fee, however corrective action of the second reporting error of the same nature may initiate a fee.	**Fees will be the greater of actual staff time spent or $518.**
HRS LABOR DISTRIBUTION DOWNLOADS LEAs may elect to receive periodic Labor Distribution file downloads from HRS to RAD or other electronic means of delivery.	**$129 per file**
HRS EDB DOWNLOADS LEAs may elect to receive monthly or semi-monthly EDB file downloads from HRS to RAD or other electronic means of delivery.	**$129 per file**
HRS/HCM MASS CHANGES Mass changes to the HRS/HCM database are performed on request and require LACOE to analyze criteria, determine methodology, input data for extract purposes, produce changes in HRS/HCM, and arrange distribution of output reports as required.	**$362 per process**

Los Angeles County
Office of Education

CONTRACT FOR
BEST ADVANTAGE AND HRS SYSTEM MAINTENANCE AND SUPPORT
ABOVE-BASELINE SERVICES
(As Applicable)
Fiscal Year 2026-27

EXHIBIT C (continued)

LEA Name: Burbank Unified School District
LEA Number: 64337

RETIREMENT REPORTING (NON HRS/HCM AGENCIES) LEAs that are partially fiscally accountable and as such do not use the HRS or the HCM system, but go through LACOE for their retirement reporting, will be charged these fees.	**$6,000 annual base charge + retirement reporting line fees as follows:** **1-149 $6.73/line** **150-299 $5.69/line** **300-499 $4.66/line** **500-699 $3.62/line** **700+ $2.59/line**
LATE TAX DEPOSIT PROCESSING REQUESTS LEAs that are unable to meet the 1:00 p.m. deadline for entering their tax deposits into FIN may request special processing. SBSS will make every attempt to accommodate such requests. Charges will be made based on the type of processing required. Same day after 1:00 p.m. $191 Next day before 11:00 a.m. $235	**$191 - $235 per request**
PAYROLL & FINANCIAL SYSTEM SPECIAL REQUESTS LEAs occasionally request additional assistance from LACOE with inputting transactions and/or performing LEA business in the HRS, HCM, FIN, and/or Budget systems. If a request for additional assistance is approved, charges are applied for SBSS staff hours.	**$77 per hour**

CONTRACT FOR
BEST ADVANTAGE AND HRS SYSTEM MAINTENANCE AND SUPPORT
FISCAL YEAR 2025-2030

The LOS ANGELES COUNTY OFFICE OF EDUCATION, a public education agency, located at 9300 Imperial Highway, Downey, California 90242-2890, hereinafter referred to as "LACOE," and Burbank Unified School District (#64337), hereinafter referred to as "LEA" mutually agree as follows:

1. BASIS OF CONTRACT

LACOE shall provide budget, payroll/human resources and financial system services to the LEA through the Business Enhancement System Transformation (BEST) Advantage Enterprise Resource Planning (ERP) System and Human Resource System (HRS) in conformance with Exhibit A, and if applicable, Exhibit B and Exhibit C, which are attached hereto, and made a part hereof.

2. SCOPE OF SERVICES

2.1 Exhibit A – Maintenance and Support Baseline Services

LACOE will provide the following maintenance and support baseline services:

1) Availability of standard reports

2) Selection and use of approved pay cycles

3) Use of all tables and database features

4) Advisory assistance and routine HRS/HCM or FIN support

5) Access during published hours of operation

6) Training of new operators and security functions

7) HRS/HCM and FIN notifications and bulletins

8) Printing of standard and supplemental warrants

9) For HRS/HCM agencies, LACOE will provide services for CalPERS and CalSTRS retirement reporting:

a. LACOE agrees to transmit retirement reporting and processing information, earnings and contributions pertaining to the terms of this agreement for LEA to CalSTRS and/or CalPERS.

b. To comply with system requirements, LACOE may modify retirement report information on behalf of LEA prior to submitting it to CalPERS or CalSTRS. After submitting LEA's retirement report to CalPERS or CalSTRS, LACOE shall make final report information/transactions available to LEA and shall notify LEA of any changes in contribution amounts. LEA access to final report information and changes in contribution amounts shall constitute notice to LEA in accordance with Education Code Section 24616.2(a)(3)(A).

c. Funding to cover employee and district retirement obligations will be transferred from LEA's County Treasury account.

d. LEA is responsible for providing CalPERS/CalSTRS membership information to employees as required by California Education Code Sections 22455.5, 22460, and 22509 and Government Code Sections 20280 through 20309.5.

e. LEA is responsible for monitoring employees' earnings and hours for mandatory membership under California Government Code Section 20305 and California Education Code Sections 22500 through 22504.

f. LEA is also responsible for monitoring employee membership status with regard to exclusions (Section 20300) and choice of election (Section 20309).

2.1.1 Charter Schools

Charter schools for whom LACOE provides other services, such as apportionment processing, retirement reporting and payroll processing, will continue to receive a separate contract (Contract for Apportionment Processing, Retirement Reporting Services and Systems Support for Charter Schools) for such services.

2.2 Exhibit B – New BEST Advantage System Implementation Modules

If applicable, LEA may choose to implement additional BEST Advantage system modules if they were not originally implemented during the initial rollout. The modules and one-time costs are outlined in Exhibit B.

2.3 Exhibit C – Above-Baseline Services

LACOE provides services to LEAs that are not part of typical business systems operations. If applicable, LACOE may charge reasonable fees for "above-baseline" activities and services as outlined in Exhibit C.

3. TERM

This Contract is effective July 1, 2025, and shall remain in effect through June 30, 2030.

4. PAYMENT

LEA shall pay LACOE the costs as specified in **Exhibit A**. The total amount payable to LACOE by the LEA for the fiscal year for budget, payroll/human resources and **financial system maintenance and support services** shall be transferred quarterly by journal voucher from the LEA to LACOE. Notices of journal voucher transfers will be provided.

If applicable, LEA shall pay LACOE the costs as specified in **Exhibit B**. The total one-time amount payable to LACOE by the LEA for the implementation of **new BEST Advantage system modules** shall be transferred by journal voucher from the LEA to LACOE. Notices of journal voucher transfers will be provided.

If applicable, LEA shall pay LACOE the costs as specified in **Exhibit C**. The total amount payable to LACOE by the LEA for **above-baseline services** shall be transferred by journal voucher from the LEA to LACOE. Notices of journal voucher transfers will be provided.

5. COSTS & ADJUSTMENTS

Maintenance and Support (Baseline Services) costs were developed through a cost-sharing model between all subscribing LEAs. Costs were allocated based on 2023 W2 counts, and fiscal year 2023-24 P2 Average Daily Attendance (ADA) counts or Full Time Equivalency (FTEs) counts (community colleges will be charged based on FTE students). These counts shall remain in effect until the next comprehensive cost recalibration. LEAs without ADA, FTE, interface LEAs, or charter schools, will have a different cost structure. Each fiscal year, Consumer Price Index (CPI) increases shall be applied to the established rates as referenced in Exhibit A.

5.1 Annual Adjustments

By July 1st of each fiscal year, LACOE will provide LEA with revised exhibits to notify them of the following fiscal year rates. The costs specified in Exhibits A, B and C shall be subject to an annual adjustment based on the CPI for All-Urban CPI for the Greater Los Angeles – Anaheim area, from October of two years prior to October of the previous year, as published by the California Department of Industrial Relations.

5.2 First Year Cost Recalibration

Fiscal Year 2025-26 marks the first cost recalibration for LEA participation in the financial and human resource systems managed by LACOE in over 25 years. Therefore, Full-Use LEAs whose calculated BEST Maintenance and Support costs for fiscal year 2025-26 exceed 20% and $10,000, as compared to the fiscal year 2024-25 combined charges for BEST Maintenance, Above Baseline, PC Products, and Warrant Charges, as applicable, may receive a discounted rate in the first year

of the agreement, and then a phased-down discount in the second year of the agreement.

5.3 Comprehensive Cost Recalibration

Beginning with the 2030-31 fiscal year, and at the end of each subsequent five-year period, a comprehensive recalibration of costs shall be conducted to ensure fairness for all parties involved. Any cost adjustments shall be communicated to LEA prior to the change.

5.4 Future Enhancements

In addition to standard maintenance and support costs, this contract covers future enhancements, software upgrades, and cybersecurity improvements. To accommodate these expenses, an annual incremental percentage increase of 25% shall be applied on top of the annual maintenance and support cost, ensuring the sustained quality and security of our services.

6. INDEMNIFICATION

LEA agrees to indemnify LACOE from and against any and all claims, demands, debts, liens, losses, damages, liabilities, costs, expenses (including, but not limited to, attorney's fees and costs, whether or not litigation has commenced), judgments, obligations, actions, or causes of action, including all claims arising from or related to the LEA's use of SSNs in connection with its operations and the aforementioned systems. Specifically, the indemnification applies to any injury, damage, or loss (including death) resulting from:

a. Allegations concerning the theft, loss or unauthorized disclosure of personally identifiable non-public information that is in the care, custody, or control of the LEA.

b. Acts or incidents that directly result from the failure of computer security to prevent a security breach including:

   i. Alteration, corruption, destruction, deletion, distribution or damage to a data asset store on computer systems;
   ii. Failure to prevent transmission of malicious code from computer systems to third party computer systems;
   iii. Participation in a denial-of-service attack directed against a third-party computer system.

c. Failure to timely disclose any of the above in violation of any breach notice law.

d. Failure to comply with a privacy policy involving the disclosure, sharing or selling of personally identifiable non-public information.

e. The failure to administer an identity theft prevention program.

In furtherance of the LEA's commitment to data security and privacy, the following practices and procedures will be followed regarding the use of SSNs in the BEST

Advantage – HCM System, infoAdvantage, and Power BI reporting databases implemented by the LEA:

a. The SSN will be masked for security roles not involved in direct administration of Personnel Management, Benefit Administration or Payroll Processing.

b. The LEA will not publicly display social security numbers.

c. The LEA will not send documents with social security numbers on them through the mail, except on applications or forms or when required by law.

d. When sending applications, forms or other documents required by law to carry SSNs through the mail, the LEA will place the SSN where it will not be revealed by an envelope window. Where possible, leave the SSN field on forms and applications blank and ask the individual to fill it in before returning the form or application.

e. The LEA will not send SSNs in any electronic form unless the connection is secure, or the SSN is encrypted.

f. The LEA will not require an individual to send their SSN over the internet or email, unless the connection is secure, or the SSN is encrypted.

g. The LEA will not require individuals to use SSNs as log on IDs, passwords or codes for access to internet web sites or other services.

h. The LEA will limit access to records containing SSNs only to those who need to see the numbers for performance of their duties. The LEA will protect records containing SSNs, including back-ups, during storage by encrypting the numbers in electronic records or storing records in other media in locked cabinets.

i. The LEA will not store records containing SSNs on computers or other electronic devices that are not secured against unauthorized access.

j. If SSNs are disclosed inappropriately and the individuals whose SSNs were disclosed are put at risk of identity theft or other harm, promptly notify the individuals potentially affected.

k. The LEA will require employees to promptly report any inappropriate disclosure or loss of records containing SSNs to their supervisors.

l. The LEA shall comply with Labor Code section 226(a) which requires employers to print no more than the last four digits of an employee's SSN or to use an employee ID number other than an SSN, on employee pay stubs or itemized statements.

These provisions shall not be limited by the availability or collectability of insurance coverage.

In the event that LACOE is served with or otherwise becomes aware of a claim arising from or related to the LEA's use of SSNs in connection with its operations and the aforementioned systems that pursuant to the terms of this agreement, the LEA shall be responsible for the defense of LACOE against the allegations made in such a claim.

LACOE shall provide the LEA with reasonably timely written notice of the same, and thereafter the LEA shall at its own expense, defend, protect and save harmless LACOE against said claim or any loss or liability thereunder.

In the further event that the LEA fails to so defend and/or indemnify and save harmless, then LACOE shall have full rights to defend, pay or settle said claim on its behalf without further notice to the LEA and with full rights to recourse against the LEA for all fees, costs, expenses and payments made or agreed to be paid to discharge said claim.

LACOE agrees to defend, indemnify, save, and hold harmless the LEA from and against any and all demands, debts, liens, claims, losses, damages, liability, costs, expenses (including, but not by way of limitation, attorney's fees and costs actually incurred, whether or not litigation has commenced), judgments or obligations, actions, or causes of action whatsoever, for or in connection with injury, damage, or loss (including, but not limited to death) to any person or property to the extent that such injury, damage or loss results from or is connected with the sole negligence or error or omission of LACOE, except for claims arising from or related to the LEA's use of SSNs in connection with its operations and the aforementioned systems. The provisions of this clause shall not be limited to the availability or collectability of insurance coverage.

7. AMENDMENTS

The Contract may be amended by mutual written document, signed by both of the parties.

8. INSURANCE

LEA and LACOE shall take out and maintain such general liability, property damage, workers' compensation, automobile and cyber-liability insurance as is required to protect their interests.

9. INDEPENDENT CONTRACTOR

While performing its obligations under this Contract, LACOE is an independent contractor and not an officer, employee or agent of LEA. During the course of this agreement neither LACOE nor LEA shall at any time or in any manner represent that they or any of their officers, employees, or agents are employees of the other.

10. RECORD RETENTION AND INSPECTION

The LEA agrees that LACOE shall have access to and the right to examine, audit, excerpt, copy or transcribe any pertinent records pertaining to this Contract. All records shall be kept and maintained by the LEA and made available to LACOE during the entire term of this Contract and for a period not less than five (5) years.

11. CONFIDENTIALITY AND NON-DISCLOSURE

Subject to any State or Federal laws requiring disclosure (e.g., the California Public Records Act), the parties agree, during the term of this Contract and for five (5) years after

termination or expiration of the Contract, to hold each other's proprietary or confidential information in strict confidence, except for any information protected under confidentiality laws which shall be held in such confidence in perpetuity. The parties agree not to provide each other's proprietary or confidential information in any form to any third party or to use each other's proprietary or confidential information for any purpose other than the implementation of and as specified in this Contract. Each party agrees to take all reasonable steps to ensure that proprietary or confidential information of either party is not disclosed or distributed by its employees, agents or consultants in violation of the provisions of this Contract.

12. MODIFICATION

The Contract shall not be modified or amended without mutual written consent of the parties. If any actual or physical deletions or changes appear on the face of the Contract, such deletions or changes shall only be effective if the initials of both contracting parties appear beside such deletion or change.

13. SEVERABILITY/WAIVER

a. If any provision of this Contract is determined to be illegal, unenforceable, or invalid, such act shall in no way affect the validity of any other provision in this Contract.

b. No waiver of any provision of this Contract shall be deemed, or shall constitute, a waiver of any other provision, whether or not similar, nor shall any such waiver constitute a continuing or subsequent waiver of the same provision.

14. INCORPORATION BY REFERENCE

Any exhibits referenced herein shall be incorporated and made a part of this Contract.

15. INTEGRATION

This Contract contains the complete and final understanding of the parties' rights, duties and obligations with respect to the transaction discussed in the Contract and supersedes all prior Contracts, understandings and commitments, whether oral or written. This Contract shall not be amended in any way except as specified in the amendment section of this Contract.

16. ATTORNEY'S FEES

Should either party be required to file any legal action or claim to enforce any provision of this Contract or resolve any dispute arising under or connected to this Contract, except as set forth in the "Failure to Comply" section, each party shall bear its own attorney's fees and costs in bringing such an action and any judgment or decree rendered in such a proceeding shall not include an award thereof.

17. GOVERNING LAW/FORUM SELECTION

This Contract is made, entered into, and executed in Los Angeles County, California, and

any legal action, claim, or proceeding arising out of or connected with this Contract shall be filed in the applicable court in Los Angeles County, California. This Contract shall be construed, and all disputes hereunder shall be settled, in accordance with the laws of the State of California.

18. NOTICES

Any notices to be given pursuant to this Contract shall be in writing and such notices, as well as any other document to be delivered shall be delivered by personal service or by deposit in the U.S. Mail, certified, or registered, return receipt requested, postage prepaid, and addressed to the party for whom intended as follows:

LACOE:

Los Angeles County Office of Education - Procurement Services
9300 Imperial Highway
Downey, CA 90242-2890

LEA:

Mailing Address is LEA Office

19. TOBACCO AND MARIJUANA-FREE SCHOOLS AND FACILITIES

When at LACOE-owned or LACOE–leased buildings, both parties hereby agree to comply with the Los Angeles County Board of Education's Policy 3513.3 which states: The County Board recognizes the health hazards associated with smoking and the use of tobacco and/or marijuana products including the breathing of second-hand smoke, and desires to provide a healthy environment for students and staff. The County Board prohibits the use of tobacco and/or marijuana products at any time in LACOE-owned or leased buildings, on LACOE property and in LACOE vehicles. This includes the use of an electronic smoking device that creates aerosol or vapor or of any oral smoking device for the purpose of circumventing the prohibition of smoking.

20. ALCOHOL AND DRUG-FREE SCHOOLS AND FACILITIES

Both parties hereby certify under penalty of perjury under the laws of the State of California that LEA will comply with the requirements of the Drug-Free Workplace Act of 1990 (Government Code Section 8350 et. seq.), and the Los Angeles County Board of Education's Alcohol and Drug-Free Workplace Policy 4020.

21. ORDER OF PRECEDENCE

Except as specifically provided elsewhere in this Contract, conflicting, vague and/or ambiguous provisions of this Contract shall prevail in the following order of precedence: (1) the provisions in the body of this Contract, (2) the exhibits of the Contract, if any; (3) all other documents cited in this Contract or incorporated by reference.

22. ASSIGNMENT

LEA shall not in any manner, directly or indirectly, by operation of law or otherwise, assign, transfer or encumber this Contract or any portion hereof of any interest herein, in whole or in part, without the prior written consent of LACOE. If prior written consent is not given by LACOE to assign, transfer, or encumber this Contract, such action shall be deemed automatically void.

23. FORCE MAJEURE

In the event that performance on the part of any party hereto shall be delayed or suspended as a result of circumstances beyond the reasonable control and without the fault or negligence of said party, none of the parties shall incur any liability to the other parties as a result of such delay or suspension. Circumstances deemed to be beyond the control of the parties hereunder shall include, but not be limited to, acts of God or of the public enemy, insurrection acts of the federal government or any unit of state or local government in sovereign capacity, fires, floods, epidemics, pandemics, quarantine restrictions, strikes, freight embargoes or delays in transportation, to the extent that such circumstances are not caused by the party's willful or negligent acts or omissions, and to the extent that they are beyond the party's reasonable control.

24. NO THIRD PARTY OBLIGATIONS

The execution and delivery of this Contract shall not be deemed to confer any rights upon, nor obligate any parties thereto, to any person or entity other than the parties hereto.

25. PROVISIONS REQUIRED BY LAW DEEMED INSERTED

Each and every provision of law and clause required by law to be inserted in this contract shall be deemed to be inserted herein and the contract shall be read and enforced as though it were so inserted and included.

26. NON-DISCRIMINATION AND NON-SEGREGATION

During the performance of this Contract, both parties hereby agree to comply with all Federal, state and local laws respecting non-discrimination in employment and non-segregation of facilities including, but not limited to, requirements set out in 41 CFR 60-1.4, 60-250.4 and 60-741.4, which equal opportunity clauses are hereby incorporated by reference.

27. CERTIFICATION REGARDING DEBARMENT, SUSPENSION OR OTHER INELIGIBILITY

(Federal Executive Order 12549)

By executing this contractual instrument, LEA certifies to the best of its knowledge and belief that it and its principals:

a. Are not presently debarred, suspended, proposed for debarment, declared ineligible, or voluntarily excluded from covered transactions by any Federal Department or Agency;

b. Have not, within a three-year period preceding the execution of this contractual instrument, been convicted of, or had a civil judgment rendered against them, for: commission of fraud or a criminal offense in connection with obtaining, attempting to obtain, or performing a public transaction (Federal, State or Local) or contract under a public transaction; or violation of Federal or State antitrust statutes; or commission of embezzlement, theft, forgery, bribery, falsification or destruction of records, making false statements, or receiving stolen property.

c. Are not presently indicted for, or otherwise criminally or civilly charged by any government entity (Federal, State or Local), with commission of any of the offenses enumerated in Section 25.2 above, of this certification;

d. Have not, within a three-year period preceding the execution of this contractual instrument, had one or more public transactions (Federal, State or Local) terminated for cause of default.

28. TERMINATION

In the event either party decides not to renew this Contract at the end of its term, a written Notice of Termination shall be given to the other party by no later than January 1st of 2030.

29. COVENANT AGAINST CONTINGENT FEES

LEA warrants that no person or selling agency has been employed or retained to solicit or secure this Contract upon a Contract or understanding for a commission, percentage, brokerage or contingent fee, excepting bona fide established commercial or selling agencies retained by LEA for the purpose of securing business. For breach or violation of this warranty, LACOE shall have the right to immediate termination of this Contract and, at its sole discretion, deduct from the contract price or consideration, or otherwise recover, the full amount of such commission, percentage, brokerage, or commission fee.

30. FAILURE TO COMPLY

In the event LEA fails to perform in accordance with the indemnification or insurance requirement clauses of this Contract, makes inaccurate certifications as a part of this contract or contracting process, or otherwise breaches any other clause of this Contract, LACOE, the Los Angeles County Board of Education and the individuals thereof, and all officers, agents, employees, representatives, and volunteers shall be entitled to recover all legal fees, costs, and other expenses incident to securing performance or incurred as a consequence of nonperformance.

31. COMPLIANCE WITH LAW

LEA shall comply with all applicable federal, state, and local laws, statutes, ordinances, rules, regulations, policies, and procedures in performing under this Contract. LEA

warrants that it has all licenses, permits, certificates and credentials required by law to perform the work specified under this Contract and shall, upon request by LACOE, provide evidence of same.

32. LACOE BUDGET/GRANT FUNDS CONTINGENCY

If any portion(s) of LACOE's budget affecting the contractual execution of this agreement does not appropriate sufficient funds for the contracted services or if grant funds related to these contracted services are not available for any reason whatsoever, this agreement shall be of no further force and effect. In this event, LACOE shall have no liability to provide services to LEA under this agreement, and the LEA shall not be obligated to make payment for services that are not rendered.

In such instances, particularly when partial funding remains available, LACOE shall have the option to either terminate this agreement with no liability occurring to LACOE, or LACOE may offer an amendment to this agreement to reflect the reduced availability of funds.

33. EXECUTION REQUIREMENTS

Proper signatures required for execution of this instrument may be by original signature; photocopy; fax/facsimile copy; valid, encrypted, electronic transmission/signature; and/or other commonly accepted, widely used commercially acceptable signature methods. This instrument may be executed in counterparts by each party on a separate copy thereof with the same force and effect as though all parties had executed a single original copy. The Parties represent and warrant that those persons signing this Agreement are authorized to execute this Agreement.

LOS ANGELES COUNTY OFFICE OF EDUCATION (LACOE)	LOCAL EDUCATION AGENCY (LEA)
	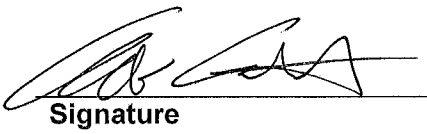
Signature	**Signature**
Karen Kimmel	Andrew Cantwell
Type or Print Name	**Type or Print Name**
Chief Financial Officer	Assistant Superintendent, Admin Services
Title/Position	**Title/Position**
	6/26/25
Date	**Date**
	June 18, 2025
	Date Approved by Board (If required)
mc 2-19 Report 5/21/2025	Mariam Abdelhamid
	Contact Person
	Director of Fiscal Services
	Title/Position
	(818) 729-4450
	Phone Number
	mariamabdelhamid@burbankusd.org
	Email Address

Return the signed copy to:

Email: Mycontracts@lacoe.edu

Los Angeles County
Office of Education

CONTRACT FOR
BEST ADVANTAGE AND HRS SYSTEM MAINTENANCE AND SUPPORT
Fiscal Year 2025-26

EXHIBIT A #3

LEA Name: Burbank Unified School District
LEA Number: 64337

<table>
<tr><td>BEST Advantage System Budget & Financial (BUD & FIN)
Maintenance Service and Support Charges

FY 2023-24 P2 ADA (utilized for the five-year contract): 13,456
Rate per ADA (adjusted annually for CPI): $7.31

Interface LEA (ADA based on FY 2023-24 P2): 13,456
<table>
<tr><th>From (ADA)</th><th>To (ADA)</th><th>Band</th><th>Annual</th></tr>
<tr><td>1</td><td>14,999</td><td>1</td><td>$ 26,000</td></tr>
<tr><td>15,000</td><td>19,999</td><td>2</td><td>$ 39,000</td></tr>
<tr><td>20,000</td><td>24,999</td><td>3</td><td>$ 51,000</td></tr>
<tr><td>25,000</td><td>99,000</td><td>4</td><td>$ 96,000</td></tr>
<tr><td>100,000</td><td>+</td><td>5</td><td>$129,000</td></tr>
</table>
Non-ADA LEA Charges: $5,000 flat rate.</td><td>$26,000</td></tr>
<tr><td>BEST Advantage (HCM), or HRS, System Payroll & Human Resources
Maintenance Service & Support Charges

2023 W2s (utilized for the five-year contract): 2,793
Rate per W2 (adjusted annually for CPI): $29.40</td><td>$82,110</td></tr>
<tr><td>FY 2025-26 First Year Discount</td><td>$11,594</td></tr>
<tr><td>Contribution for Future Enhancements, Software Upgrades, and Cybersecurity Improvements

Annual Incremental Percentage: 25%</td><td>$24,129</td></tr>
<tr><td>Total FY 2025-2026 System Charges</td><td>$120,645</td></tr>
</table>

Los Angeles County
Office of Education

CONTRACT FOR
BEST ADVANTAGE AND HRS SYSTEM MAINTENANCE AND SUPPORT
NEW SYSTEM MODULES
(One-Time Costs, As Applicable)
Fiscal Year 2025-26

EXHIBIT B

LEA Name: Burbank Unified School District
LEA Number: 64337

Module	ADA 1 to 14,999	ADA 15,000 to 29,999
Fixed Assets	$6,050	$9,200
Accounts Receivable	$6,900	$6,900
Procurement:		
Purchase Orders only	$11,500	$17,000
Requisitions only	$7,500	$10,500
Purchase Orders & Requisition	$18,900	$27,500
Inventory	$15,500	$22,500

Note:
Districts with 30,000 and greater ADA will require a separate discussion.

If other one-time or specific financial system services are needed beyond those mentioned above, the LEA shall discuss their needs with LACOE's Division of School Financial Services to determine the cost to be charged.

Los Angeles County
Office of Education

CONTRACT FOR
BEST ADVANTAGE AND HRS SYSTEM MAINTENANCE AND SUPPORT
ABOVE-BASELINE SERVICES
(As Applicable)
Fiscal Year 2025-26

EXHIBIT C

LEA Name: Burbank Unified School District
LEA Number: 64337

ENTRIES, CORRECTIONS, OR REPETITIVE ENTRIES LACOE may assess reasonable fees for entries, corrections, or repetitive entries into the CalPERS and CalSTRS reporting systems that result from audits performed by CalPERS, CalSTRS, LACOE, LEA, or other agencies. A first-time notice of error will not initiate a fee, however corrective action of the second reporting error of the same nature may initiate a fee.	**Fees will be the greater of actual staff time spent or $500.**
HRS LABOR DISTRIBUTION DOWNLOADS LEAs may elect to receive periodic Labor Distribution file downloads from HRS to RAD or other electronic means of delivery.	**$125 per file**
HRS EDB DOWNLOADS LEAs may elect to receive monthly or semi-monthly EDB file downloads from HRS to RAD or other electronic means of delivery.	**$125 per file**
HRS/HCM MASS CHANGES Mass changes to the HRS/HCM database are performed on request and require LACOE to analyze criteria, determine methodology, input data for extract purposes, produce changes in HRS/HCM, and arrange distribution of output reports as required.	**$350 per process**

Los Angeles County
Office of Education

CONTRACT FOR
BEST ADVANTAGE AND HRS SYSTEM MAINTENANCE AND SUPPORT
ABOVE-BASELINE SERVICES
(As Applicable)
Fiscal Year 2025-26

EXHIBIT C (continued)

LEA Name: Burbank Unified School District
LEA Number: 64337

RETIREMENT REPORTING (NON HRS/HCM AGENCIES) LEAs that are partially fiscally accountable and as such do not use the HRS or the HCM system, but go through LACOE for their retirement reporting, will be charged these fees.	**$6,000 annual base charge + retirement reporting line fees as follows:** **1-149 $6.50/line** **150-299 $5.50/line** **300-499 $4.50/line** **500-699 $3.50/line** **700+ $2.50/line**
LATE TAX DEPOSIT PROCESSING REQUESTS LEAs that are unable to meet the 1:00 p.m. deadline for entering their tax deposits into FIN may request special processing. SFS will make every attempt to accommodate such requests. Charges will be made based on the type of processing required. Same day after 1:00 p.m. $185 Next day before 11:00 a.m. $227	**$185 - $227 per request**
PAYROLL & FINANCIAL SYSTEM SPECIAL REQUESTS LEAs occasionally request additional assistance from LACOE with inputting transactions and/or performing LEA business in the HRS, HCM, FIN, and/or Budget systems. If a request for additional assistance is approved, charges are applied for SFS staff hours.	**$75 per hour**

Burbank Unified School District
Business Services

REPORT TO THE BOARD

TO:	Members of the Board of Education
FROM:	Business Services
PREPARED BY:	Business Services
SUBMITTED BY:	Terri Ramirez-Adams, Senior Administrative Assistant
DATE:	June 25, 2026
SUBJECT:	Approval of Agreement for Professional Services – School Business Inc. (Business Services)

Background:

Business Services requests approval of a professional services agreement with School Business Inc. to provide fiscal consulting support on an as-needed basis for the 2026–2027 fiscal year. The purpose of this agreement is to support operational continuity, provide technical assistance, and build internal staff capacity within the Business Services and Fiscal Services departments.

This agreement will provide continued specialized fiscal consulting support to assist the District with financial reporting, budget development, year-end closing, financial system support, and other business-related projects as assigned.

Discussion/Issues:

School Business Inc. will perform a variety of fiscal and operational tasks at the direction of the Chief Business Official and Director of Fiscal Services. Services may include support with BEST, SACS, and other financial systems; staff training; federal and state financial reports; budget calculations and compilations; year-end closing; multi-year projections; review of purchase requisitions and position control documents; collective bargaining scenario calculations; and other business-related projects as assigned.

The agreement is structured to remain flexible and responsive to District needs. Services will be provided with an emphasis on professionalism, accuracy, timeliness, and the development of internal capacity.

Fiscal Impact:

The agreement is hourly at $200 per hour and shall not exceed $75,000. Costs will be paid from the General Fund.

Recommendation:

Business Services recommends that the Board of Education approve the Agreement between the Burbank Unified School District and School Business Inc., for professional business services effective July 1, 2026 through June 30, 2027, not to exceed $75,000, and authorize the Superintendent or designee to execute the agreement pursuant to BUSD-AR 3314, as presented.

AGREEMENT FOR
CONTRACTED SERVICES
BETWEEN
BURBANK UNIFIED SCHOOL DISTRICT AND
SCHOOL BUSINESS INC

1. **Parties and Date.**

This Agreement ("Agreement") is made and entered into this _____, 2026, by and between the **BURBANK UNIFIED SCHOOL DISTRICT** ("District") **SCHOOL BUSINESS INC** ("Company") (collectively referred to as the "Parties" and each individually as "Party").

2. **Recitals.**

2.1 **Company.** Company is operated by a professional who is experienced in providing business related services.

2.2 **Project.** The District aims to enlist the services of the Company to assist with business related services, as outlined in Exhibit "A".

3. **Terms.**

3.1 **Scope of Services, Qualifications and Term**.

(a) General Scope of Services. The Company promises and agrees to furnish labor, materials, services, and customary work necessary to supply professional services, as more particularly described in Exhibit "A" attached hereto and incorporated herein by reference (collectively "Services"). All Services shall be subject to, and performed in accordance with, this Agreement, the exhibits attached hereto and incorporated herein by reference, and all applicable local, state and federal laws, rules and regulations.

3.2 **Term**. The term of this Agreement shall be from July 1, 2026 until June 30, 2027, unless earlier terminated as provided herein. The Parties may mutually agree to extend this term by written amendment. Should the Parties agree to extend the term of this Agreement, the fee for services described in **Exhibit "B"** shall remain the same.

3.3 **Responsibilities of The Company.**

(a) Control and Payment of The Company and its Subordinates. District retains the Company on an independent contractor basis and the Company is not an employee of District. Any additional personnel performing the Services under this Agreement on behalf of the Company shall at all times be under the Company's exclusive direction and control. The Company shall pay all wages, salaries, and other amounts due such personnel in connection with their performance of Services under this Agreement and as required by law including, but not limited to, the payment of prevailing wage, as applicable, and in accordance with Labor Code sections 1720 et seq. and 1770 et seq. The Company shall obtain a copy of the prevailing rates of per diem wages applicable

to the work to be performed under this Agreement from the website of the Division of Labor Statistics and Research of the Department of Industrial Relations located at www.dir.ca.gov/dlsr/. In the alternative, the District shall provide the Company with a copy of the prevailing rates of per diem wages. The Company shall be responsible for all reports and obligations respecting such employees, including, but not limited to, social security taxes, income tax withholding, unemployment insurance, and workers' compensation insurance.

(b) Conformance to Applicable Requirements. All work prepared by the Company specifically for the District under this Agreement is subject to the approval of District and any and all applicable regulatory State agencies, and the deliverables resulting therefrom shall be the property of District; provided, however, that the Company retains all right, title, and interest in and to its Pre-Existing Materials (as defined in Section 3.6(e)), including its formulas, macros, templates, models, methodologies, know-how, software, and tools, whether developed before or during the term of this Agreement, and nothing in this Agreement transfers ownership of such Pre-Existing Materials to the District.

(c) Coordination of Services. The Company agrees to work closely with District staff in the performance of Services and shall be available to District's staff, the Company and other staff at all reasonable times.

(d) Insurance. The Company shall comply with the following insurance provisions, unless one or more paragraphs are specifically waived by the District in writing.

(i) Time for Compliance. The Company shall not commence Services under this Agreement until it has provided evidence satisfactory to District that it has secured all insurance required under this Section. In addition, the Company shall not allow any subcontractor to commence work on any subcontract until it has provided evidence satisfactory to District that the subcontractor has secured all insurance required under this Section.

(ii) Minimum Requirements and Limits. The Company shall, at its expense, procure and maintain insurance for the duration of this Agreement. Such insurance shall meet at least the following minimum levels of coverage:

(1) Minimum Scope of Insurance. Coverage which is appropriate to the Company's profession, or that of its consultants or subcontractors.

(2) Minimum Limits of Insurance. The Company shall maintain limits no less than: (1) *Professional Liability:* $1,000,000 per occurrence.

3.4 **Fees and Payments.**

(a) Compensation. The Company shall receive compensation, including reimbursements, for all Services rendered under this Agreement at the rates set forth in **Exhibit "B"** attached hereto and incorporated herein by reference. Extra Work may be authorized, as described below, and if authorized, will be compensated at the rates and manner set forth in this Agreement.

(b) Reimbursement of Expenses. The Company may be reimbursed for expenses authorized by the District.

(c) Payment of Compensation. The Company shall submit to District an invoice or statement which indicates work completed and hours of Services rendered by the Company. District shall pay the Company within a reasonable time and in accordance with this Agreement.

3.5 **Maintenance of Accounting Records.**

(a) Records. The Company shall maintain complete and accurate records with respect to all costs and expenses incurred under this Agreement. All such records shall be clearly identifiable. The Company shall allow a representative of District during normal business hours to examine, audit, and make transcripts or copies of such records and any other documents created pursuant to this Agreement. The Company shall allow inspection of all work, data, documents, proceedings, and activities related to the Agreement for a period of four (4) years from the date of final payment under this Agreement. The District's right to examine, audit, and copy under this Section extends only to records of costs and expenses and to the District Deliverables, and does not entitle the District to examine, audit, copy, or transcribe the Company's Pre-Existing Materials (as defined in Section 3.6(e)), the underlying source code, formulas, macros, or methodologies of which shall remain the Company's confidential and proprietary property.

(b) Data Security. The Company agrees to abide by and maintain adequate data security measures, consistent with industry standards and technology best practices, to protect District Data from unauthorized disclosure or acquisition by an unauthorized person.

3.6 **General Provisions**.

(a) Suspension of Services. The District may, in its sole discretion, suspend all or any part of Services provided hereunder without further cost.

(b) Termination of Agreement.

(i) Termination. The District or the Company may, by written notice to, terminate the whole or any part of this Agreement at any time and without cause. Upon termination, the Company shall be compensated only for those services which have been rendered to District, and the Company shall be entitled to no further compensation.

(ii) Effect of Termination. If this Agreement is terminated as provided in this Section, District may require the Company to provide all finished or unfinished District Deliverables, documents, data, and reports prepared by the Company specifically for the District in connection with the performance of Services under this Agreement. For the avoidance of doubt, the Company shall not be required to deliver, disclose, or relinquish any of its Pre-Existing Materials (as defined in Section 3.6(e)), including any programming source code, formulas, macros, or methodologies underlying its tools, except for the non-exclusive internal-use license to embedded Pre-Existing Materials granted under Section 3.6(e). The Company shall be required to provide such documents and other information within fifteen (15) days of the request.

(iii) Additional Services. In the event this Agreement is terminated in whole or in part as provided herein, District may procure, upon such terms and in such manner as it may determine appropriate, services similar or identical to those terminated.

(c) Delivery of Notices. All notices permitted or required under this Agreement shall be given to the respective Parties at the following address, or at such other address as the respective Parties may provide in writing for this purpose:

COMPANY:
SCHOOL BUSINESS INC
1968 S. Coast Hwy #4553
Laguna Beach, CA 92651
Or
mark@schoolbusinessinc.com

DISTRICT:
Burbank Unified School District
1900 West Olive Avenue
Burbank, CA 91506

Such notice shall be deemed made when delivered to the address set forth above. Notice shall be deemed adequate on the date actual notice occurred, regardless of the method of service.

(d) Mediation. Disputes arising from this Agreement may be submitted to mediation if mutually agreeable to the Parties hereto. The type and process of mediation to be utilized shall be subject to the mutual agreement of the Parties.

(e) Ownership of Materials and Confidentiality.

(i) All materials and data, as mandated by federal, state, or local laws, rules, or regulations, that are prepared or collected by the Company specifically for the District under this Agreement shall be the property of the District (the "District Deliverables"). Notwithstanding the foregoing, the Company shall retain all right, title, and interest in and to its formulas, macros, templates, models, spreadsheets, methodologies, processes, know-how, software, and tools, and any improvements, modifications, or derivatives thereof, whether developed before or during the term of this Agreement (collectively, the "Pre-Existing Materials"). The Pre-Existing Materials are and shall remain the Company's confidential and proprietary property and constitute trade secrets of the Company. To the extent any Pre-Existing Materials are embedded in or necessary to the use of the District Deliverables, the Company grants the District a non-exclusive, non-transferable, royalty-free license to use such Pre-Existing Materials solely for the District's internal purposes in connection with the District Deliverables, and not for resale, sublicensing, reverse engineering, or distribution to third parties. Any utilization of the materials or data beyond the intended purposes of this Agreement shall be at the District's sole risk. The District shall indemnify the Company against any damages arising from such unauthorized use, including the release of this material to third parties.

(ii) All District Deliverables shall be provided to the District, or such other agency or entity as directed by District or required by law, rule or regulation, immediately upon completion of the term of this Agreement as directed by District.

(f) Attorney's Fees. If either party commences an action against the other party, either legal, administrative or otherwise, arising out of or in connection with this Agreement, each party shall be responsible for their own attorney fees.

(g) Entire Agreement. This Agreement contains the entire Agreement of the Parties with respect to the subject matter hereof, and supersedes all prior negotiations, understandings or agreements.

(h) Governing Law. This Agreement shall be governed by the laws of the State of California. Any action brought to enforce the terms of this Agreement shall be brought in a state or federal court located in the County of Los Angeles, State of California.

(i) Time of Essence. Time is of the essence for each and every provision of this Agreement.

(j) District's Right to Employ Other Consultants. District reserves right to employ other consultants in connection with this Project.

(k) Amendments/Waiver. This Agreement may not be amended except by a writing signed by the District and the Company.

(l) Severability. If any section, subsection, sentence, clause or phrases of this Agreement, or the application thereof to any of the Parties, is for any reason held invalid or unenforceable, the validity of the remainder of the Agreement shall not be affected thereby and may be enforced by the Parties to this Agreement.

(m) Interpretation. In interpreting this Agreement, it shall be deemed that it was prepared jointly by the Parties with full access to legal counsel of their own. No ambiguity shall be resolved against any party on the premise that it or its attorneys were solely responsible for drafting this Agreement or any provision thereof.

(n) Conflict of Interest. The Company shall disclose to District any outside activities or interests that conflict or may conflict with the interests of the District. Prompt disclosure is required if the activity or interest is related, directly or indirectly, to (1) any activity that the Company may be involved with on behalf of the District, or (2) any activity that the Company may be involved with on behalf of any other firm or agency. In addition, the Company shall comply with all provisions of the Political Reform Act and implementing regulations, as applicable, and in accordance with the District's Conflict of Interest Code. The Company shall be subject to the broadest disclosure category in the District's Conflict of Interest Code during the term of this Agreement, except to the extent specifically modified in writing by the Superintendent or designee. For the term of this Agreement, no member, officer or employee of District, during the term of his or her service with District, shall have any direct interest in this Agreement, or obtain any present or anticipated material benefit arising therefrom.

(o) Equal Opportunity Employment and Non-Discrimination. The Company and its sub-consultants represent and acknowledge that they are an equal opportunity employer and that they shall not discriminate against any employee or applicant for employment because of race, religion, color, national origin, ancestry, sex or age. Such non-discrimination shall include, but not be limited to, all activities related to initial employment, upgrading, demotion, transfer, recruitment or recruitment advertising, layoff or termination. The Company and its sub-consultants are required to give written notice of their obligations to labor organizations with which they have a collective bargaining or other agreement. The Company shall also comply with all relevant provisions of District's Minority Business Enterprise program, if any, or other related programs or guidelines currently in effect or hereinafter enacted. The Company must make a good faith effort to contact and utilize DVBE subcontractors or sub-consultants and suppliers in securing bids for performance of the Agreement and shall be required to certify its good faith efforts towards retaining DVBE subcontractors or sub-consultants and suppliers and identify DVBE firms utilized in performance of the Agreement.

(q) Confidentiality. The Company hereby acknowledges that certain records and information maintained by the District, or by the Company on behalf of the District, are protected by law and shall not be released to third parties without express authorization from the District. Such records include, but are not limited to, student records (i.e., any item of information relating to an identifiable student) and personnel records. In addition, all ideas, memoranda, plans, strategies, and documents shared with the Company by District in connection with the performance of this Agreement, not generally known to the public, shall be held confidential by the Company. The Company agrees that information acquired by the Company during meetings with the District's administrative team, or during closed session Board discussions are deemed confidential and, except to the extent required by law, shall not be shared with third parties without express authorization from the District. Reciprocally, the District agrees that the Company's Pre-Existing Materials (as defined in Section 3.6(e)), including its formulas, macros, templates, models, methodologies, processes, software, tools, and other proprietary or trade-secret information disclosed to or observed by the District in connection with this Agreement, are the confidential property of the Company, and the District shall not disclose, publish, reverse engineer, or distribute such information to any third party, nor use it other than for the District's internal purposes as permitted under Section 3.6(e), without the Company's express written authorization, except to the extent disclosure is required by law (including the California Public Records Act), in which case the District shall, to the extent legally permitted, provide the Company prompt written notice and a reasonable opportunity to seek a protective order or other confidential treatment.

(r) Drug/Tobacco-Free Facilities. All District facilities are drug and tobacco-free facilities. Any drug and/or tobacco use (smoked or smokeless) is prohibited at all times on all areas of District facilities.

(s) Board Approval Required. This Agreement shall not be binding nor take effect unless approved or ratified by the District Board of Education.

(t) Exhibits and Recitals. All Exhibits and Recitals contained herein are hereby incorporated into this Agreement by this reference.

(u) Counterparts. This Agreement may be executed in counterparts, each of which shall constitute an original and all of which shall constitute one agreement.

IN WITNESS WHEREOF, the Parties hereto have executed this Agreement by their authorized officers as of the day and year first written above.

BURBANK UNIFIED SCHOOL DISTRICT	**SCHOOL BUSINESS INC**
By: _____	By: _____
Name: _____	Name: Mark Keriakous
Title: _____	Title: Consultant
Date: _____	Date: June 8, 2026

EXHIBIT "A"
SCOPE OF SERVICES

The scope of the work includes a variety of fiscal related tasks at the direction of the CBO and the Director of Fiscal Services on an as needed basis. Some of the tasks may include but are not limited to:

- Assistance, support with work within BEST, SACS, and other financial related systems,
- Training staff
- Assistance with federal and state financial reports
- Budget calculations and compilations
- Year-end closing
- Multi-year projections,
- Review of purchase requisitions and position control documents
- Collective bargaining scenario calculations
- Other business related projects as assigned.

These services will be executed with a strong emphasis on professionalism, accuracy, and timeliness with a goal of building internal capacity at the District. The company will remain adaptable, incorporating ongoing adjustments and feedback to ensure continuous alignment with organizational goals and standards.

EXHIBIT "B"
COMPENSATION FOR SERVICES

The District shall compensate School Business Inc during the term based on the actual amount of time spent on the services and invoiced at the rate of $200 per hour, rounded up in 15-minute increments, not to exceed $75,000.

If travel is required by the District the Company will be reimbursed for the actual cost or the IRS mileage rate and associated travel time.

Payment shall be due upon submission of a monthly invoice to the District.

The Company shall not be entitled to receive any additional compensation, benefits or other consideration for services under this Agreement and is solely and directly responsible for any tax related obligation arising out of the consideration received for consulting services.

BURBANK UNIFIED SCHOOL DISTRICT
Human Resources Services

REPORT TO THE BOARD

TO:	Members of the Board of Education
FROM:	Human Resources Services
PREPARED BY:	Lauren Trammell, Executive Assistant of Human Resources Services
SUBMITTED BY:	Lauren Trammell, Executive Assistant of Human Resources Services
DATE:	June 25, 2026
SUBJECT:	Approval of Renewal of Agreement Between the Burbank Unified School District and Evernorth Behavioral Health Inc. (Human Resources)

Background
Evernorth Behavioral Inc., formerly known as Cigna Behavioral Health, has partnered with Burbank Unified School District for the past twenty-four (24) years together for a successful Employee Assistance Program. An Employee Assistance Program (EAP) is a voluntary work-based program that offers free and confidential mental health assessment for short-term counseling, referrals, and follow-up services for employees. EAPs address a broad and complex body of issues affecting mental and emotional well-being of Burbank Unified School District Employees.

Discussion/Issues
With an employee count of 2,550 employees, twenty (20) employer services hours per contract year is to be used for critical incident responses, manager training, and on-site wellness seminars. Should these be exceeded per twelve (12) month period, additional hours may be purchased. The EAP includes three (3) face-to-face visit per presenting issues at no charge to all employees and their household members, management consultation and referral services.

Fiscal Impact
The District will use the Agreement between the Burbank Unified School District and Evernorth Behavioral Health Inc., to serve the mental and emotional needs of employees. At $1.93 per employee per month, this will be paid using account (01.0-00000.0-00000-72000-5860-755-0000-0000).

Recommendation
Human Resources Services, recommends that the Board of Education approve the Agreement Between the Burbank Unified School District and Evernorth Behavioral Health Inc. for the Employee Assistance Program, effective January 1, 2027 through December 31, 2028, and that authority to sign the Agreement for Professional Services be exercised pursuant to BUSD —AR 3314, as presented.

Burbank Unified School District
January 2027

May 11, 2026

RE: Burbank Unified School District EAP Renewal

Evernorth Care Solutions, Inc. ("Evernorth Behavioral"), formerly known as Cigna Behavioral Health, Inc. and Burbank Unified School District have partnered together for a successful Employee Assistance Program ("EAP") over the past twenty-eight years. We are pleased to continue providing this program to Burbank Unified School District, and we appreciate this opportunity to continue working with you.

Employee Assistance Program

The below EAP renewal information is for the 24-month period beginning 1/1/2027 through 12/31/2028.

Rates/Fees

Product	*Current Fee	*Renewal Fee	Rate Change	Employer Service Hours
Emp. Asst. & LE A&R	$1.89 PEPM*	$1.93 PEPM*	2.12%	10 hours per 1,000 employees or 16 actual hours per contract year

**per employee per month*

Evernorth Behavioral will not revise the EAP rate during the 24-month period from the renewal date, assuming all other financial assumptions remain constant. It assumes an employee count of 1636 and includes 16 employer service hours per contract year to be used for critical incident responses, manager training, and on-site wellness seminars. Should you exceed 16 employer service hours per 12-month period, you may purchase additional hours on a fee-for-service basis.

This renewal for your EAP continues to provide three (3) face-to-face visits per presenting issue at no charge to all employees and their household members, management consultation and referral services. Evernorth Behavioral will continue to provide EAP services for Burbank Unified School District pursuant to the terms of your EAP agreement ("Agreement"). This signed renewal letter will serve to amend the Agreement. Please have a duly authorized individual of Burbank Unified School District sign to indicate acceptance of the above rate.

Retain a copy of the renewal letter for your files and return the signed original to me at the following address:

Cigna
Attn: Millie Beltran
by email: Millie.Beltran@CignaHealthcare.com

If a signature is not obtained within sixty (60) days prior to the effective date of this renewal notice, the renewal terms will be deemed accepted as presented. The renewal letter and receipt confirmation will serve as the contract amendment. Evernorth Behavioral will continue to provide services for participants pursuant to the terms of the Agreement, as amended.

If you have any questions about the information in this letter, please contact me at 305.849.9166 as soon as possible.

Thank you for the opportunity to continue to serve you and your employees.

Best regards,

Millie Beltran

Millie Beltran, Behavioral EAP Account Manager

Accepted by: _____ Title: _____

Date: _____

Confidential, unpublished property of Cigna Healthcare. Do not duplicate or distribute. Use and distribution limited solely to authorized personnel. © 2026 Cigna Healthcare

BURBANK UNIFIED SCHOOL DISTRICT
Human Resources Services

REPORT TO THE BOARD

TO:	Members of the Board of Education
FROM:	Human Resources Services
PREPARED BY:	Lauren Trammell, Executive Assistant of Human Resources Services
SUBMITTED BY:	Lauren Trammell, Executive Assistant of Human Resources Services
DATE:	June 25, 2026
SUBJECT:	Ratification of Agreement for Professional Services (Human Resources)

Background
Pursuant to Board Policy 3312, The Board of Education's designee may contract with vendors to provide specific services on a temporary basis.

Discussion/Issues
The Burbank Unified School District required comprehensive support to manage the Certificated and Classified layoff processes for the 2025-2026 school year. This need was primarily driven by a leadership vacancy within the Human Resources Department, which has been without consistent oversight since September 2025.

The Human Resources Department faced limitations in executing and ensuring the complex and high regulated steps associated with staff layoffs. These processes require adherence to strict legal, procedural, and timeline requirements, increasing the risk of noncompliance. To address these challenges, Burbank Unified School District worked with School Services of California to provide expert consultation and operational support through the layoff process.

Fiscal Impact
The fiscal impact of a professional Services Agreement with School Services California, to assist with the 2025-2026 Layoff Process would be an amount not to exceed $4,500.00 (01.0-00000.0-00000-72000-5880-755-0000-0000).

Recommendation
Human Resources Services, recommends that the Board of Education ratify the Agreement for Professional Services between the Burbank Unified School District and School Services of California to assist with the 2025-2026 layoff process, effective December 1, 2025 to June 30, 2026, and the authority to sign the agreement be exercised pursuant to BUSD—AR 3314, as presented.

School Services of California INC.

P.O. BOX 516613
LOS ANGELES, CA 90051-0599
(916) 446-7517

T.I.N. 94-2447992

INVOICE

INVOICE DATE: 01/31/26

INVOICE NUMBER: 0146085-IN

PAGE: 1

P.O. #: PER CONTRACT

CLIENT CODE: 0003250 S65T

BURBANK USD
DR OSCAR MASIAS INT SUPT
1900 WEST OLIVE AVENUE
BURBANK, CA 91506

RE: HR SUPPORT

DESCRIPTION	UNITS/HRS	CHARGES TOTAL
01/14/26 SARAH NIEMANN CONSULTING FOR CLIENT	4.00	1340.00
TOTAL FEES:		1340.00
AMOUNT DUE:		1340.00

Safeguard LITHO USA 03/21 Y10SF008156M

School Services of California INC.

P.O. BOX 516613
LOS ANGELES, CA 90051-0599
(916) 446-7517

T.I.N. 94-2447992

INVOICE

INVOICE DATE: 12/31/25

INVOICE NUMBER: 0146007-IN

PAGE: 1

P.O. #: PER CONTRACT

CLIENT CODE: 0003250 S65T

BURBANK USD
DR OSCAR MASIAS INT SUPT
1900 WEST OLIVE AVENUE
BURBANK, CA 91506

RE: HR SUPPORT

	DESCRIPTION	UNITS/HRS	TOTAL
12/04/25	SARAH NIEMANN CONSULTING FOR CLIENT	3.00	1005.00
12/17/25	SARAH NIEMANN CONSULTING FOR CLIENT	3.00	1005.00
		TOTAL FEES:	2010.00
		AMOUNT DUE:	2010.00

C Antonio 6/4/26

School Services of California INC.

P.O. BOX 516813
LOS ANGELES, CA 90051-0599
(916) 446-7517

T.I.N. 94-2447992

INVOICE

INVOICE DATE: 03/31/26

INVOICE NUMBER: 0146357-IN

PAGE: 1

P.O. #: PER CONTRACT

CLIENT CODE: 0003250 S65T

BURBANK USD
DR OSCAR MASIAS INT SUPT
1900 WEST OLIVE AVENUE
BURBANK, CA 91506

RE: HR SUPPORT

DESCRIPTION		UNITS/HRS	CHARGES TOTAL
03/06/26	SARAH NIEMANN CONSULTING FOR CLIENT	3.00	1005.00
		TOTAL FEES:	1005.00
		AMOUNT DUE:	1005.00

C Gutierrez 6/4/26

BURBANK UNIFIED SCHOOL DISTRICT
Business Services

REPORT TO THE BOARD

TO:	Members of the Board of Education
FROM :	Jason Hasty, Assistant Superintendent of Business Services
PREPARED BY:	Malihe Shokouhi, Project Manager
SUBMITTED BY:	Megan Burkhart, Facilities Operations Construction Technician
DATE:	June 25, 2026
SUBJECT:	Approval of Contract with Becker & Miyamoto, Inc. for Boundary Survey and Title Review Services at Various Sites (Measure ABC Bond Fund)

Background:

As part of ongoing implementation planning for Measure ABC, staff has identified a significant gap in the District's property documentation. Despite extensive internal review, complete and current boundary surveys, title reports, easement documentation, and related property records are not available for many District-owned sites.

Discussion:

Accurate boundary and title information is essential for effective facilities planning, design, modernization, and construction. This information is routinely required by architects, engineers, Division of the State Architect (DSA) consultants, environmental specialists, and construction professionals to properly assess site conditions, including property limits, easements, rights-of-way, and other constraints that may impact project scope, design, and constructability.

The proposed agreement with Becker & Miyamoto, Inc. will establish updated boundary surveys and title review documentation for District properties. By proactively completing this work at the beginning of the Measure ABC bond program, the District will create a comprehensive property records database that can be utilized across multiple future bond-funded projects rather than requiring individual surveys to be commissioned on a project-by-project basis.

Fiscal Impact:

Expenditure not to exceed $141,500 (Measure ABC Bond Funds)

Recommendation:

Jason Hasty, Assistant Superintendent of Business Services, recommends that the Board of Education approve the proposal from Becker & Miyamoto, Inc., for boundary survey and title review services at various Burbank Unified School District sites, not to exceed $141,500.00 (Measure ABC Bond Funds), and that authority to sign the agreement be exercised pursuant to BUSD – AR3314, as presented.

BECKER & MIYAMOTO, INC.
Licensed Land Surveyors
5601 W. Washington Boulevard
Los Angeles, California 90016
Phone (323) 592-3589
bms@bmsurvey.com

PROPOSAL FOR SURVEYING SERVICES

DATE: May 22, 2026

TO: Burbank Unified School District c/o Malihe Shokouhi

RE: Boundary Survey with Title Review for all BUSD Sites

SITE NAME: **Burbank Admin Office**
PROPERTY ADDRESS: 1900 W. Olive Ave, Burbank, CA 91506
LEGAL DESCRIPTION: Lots 4 & 5, Tract No. 7375
DESCRIPTION OF SERVICES:

Boundary Survey – We will provide a map including the following:

- Legal boundary of the subject property including easements based upon a Preliminary Title Report
- Property line monuments – at property corners or offsets thereto
- Title Search – A Preliminary Title report will be ordered by our firm and prepared by Ticor Title Company

FEE: $ 6,000.00

SITE NAME: **District Service Center & Dolores Huerta Middle School**
PROPERTY ADDRESS: 510 S. Shelton St & 420 S. Mariposa St, Burbank, CA 91506
LEGAL DESCRIPTION: Lots 1 & 2, and A Portion of Lots 3 & 4, Block 52, Subdivision of Rancho Providencia and Scott Tract
DESCRIPTION OF SERVICES:

Boundary Survey – We will provide a map including the following:

- Legal boundary of the subject property including easements based upon a Preliminary Title Report
- Property line monuments – at property corners or offsets thereto
- Title Search – A Preliminary Title report will be ordered by our firm and prepared by Ticor Title Company

Record of Survey – In compliance with Section 8762 of the Professional Land Surveyors Act, we will prepare a Record of Survey and file it with the County Engineer's office. Due to the nature of the subject parcel being composed of a portion of a larger lot, we must prepare a record of our survey computations including all measurements taken, records used, and monuments found or set.

FEE: $ 11,000.00

SITE NAME: **Burbank Adult School & Luther Middle School**
PROPERTY ADDRESS: 3811 Allan Ave, 91505 & 3700 W. Jeffries Ave, Burbank, CA 91505
LEGAL DESCRIPTION: A Portion of the SW ¼, SE ¼, SEC. 9, T1N, R14W, SBM
DESCRIPTION OF SERVICES:

Boundary Survey – We will provide a map including the following:

- Legal boundary of the subject property including easements based upon a Preliminary Title Report
- Property line monuments – at property corners or offsets thereto
- Title Search – A Preliminary Title report will be ordered by our firm and prepared by Ticor Title Company

FEE: $ 6,000.00

CONTINUED ON NEXT PAGE

SITE NAME: **Bret Harte Elementary School**
PROPERTY ADDRESS: 3200 W. Jeffries Ave, Burbank, CA 91505
LEGAL DESCRIPTION: Lots 50-89, Tract No. 10168 and A Vacated Portion of California St.
DESCRIPTION OF SERVICES:

Boundary Survey – We will provide a map including the following:

- Legal boundary of the subject property including easements based upon a Preliminary Title Report
- Property line monuments – at property corners or offsets thereto
- Title Search – A Preliminary Title report will be ordered by our firm and prepared by Ticor Title Company

FEE: $ 8,000.00

SITE NAME: **Disney Elementary School**
PROPERTY ADDRESS: 1220 W. Orange Grove, Burbank, CA 91506
LEGAL DESCRIPTION: Lots 12, 13, & 14, and A Portion of Lot 15, Hilbish Subdivision
DESCRIPTION OF SERVICES:

Boundary Survey – We will provide a map including the following:

- Legal boundary of the subject property including easements based upon a Preliminary Title Report
- Property line monuments – at property corners or offsets thereto
- Title Search – A Preliminary Title report will be ordered by our firm and prepared by Ticor Title Company

FEE: $ 6,000.00

SITE NAME: **Edison Elementary School**
PROPERTY ADDRESS: 2110 W. Chestnut St, Burbank, CA 91506
LEGAL DESCRIPTION: Lots 38-48, 54-58, 78-87, 97-106, 107-116, Tract No. 8283, and a Vacated Portion of Myers Street and Alley
DESCRIPTION OF SERVICES:

Boundary Survey – We will provide a map including the following:

- Legal boundary of the subject property including easements based upon a Preliminary Title Report
- Property line monuments – at property corners or offsets thereto
- Title Search – A Preliminary Title report will be ordered by our firm and prepared by Ticor Title Company

FEE: $ 6,000.00

SITE NAME: **Emerson Elementary School**
PROPERTY ADDRESS: 720 E. Cypress Ave, Burbank, CA 91051
LEGAL DESCRIPTION: Lots 1-6 & 9-13, Tract No. 8429, and Lots 1-10, Tract No. 9222, and Lot 2, Block 21, Town of Burbank, and a Vacated Portion of an Alley
DESCRIPTION OF SERVICES:

Boundary Survey – We will provide a map including the following:

- Legal boundary of the subject property including easements based upon a Preliminary Title Report
- Property line monuments – at property corners or offsets thereto
- Title Search – A Preliminary Title report will be ordered by our firm and prepared by Ticor Title Company

FEE: $ 8,000.00

SITE NAME: **Jefferson Elementary School**
PROPERTY ADDRESS: 1900 North 6th Street, Burbank, CA 91504
LEGAL DESCRIPTION: A Portion of Lots 9 & 10, Block 118, Subdivision of Rancho Providencia and Scott Tract
DESCRIPTION OF SERVICES:

Boundary Survey – We will provide a map including the following:

- Legal boundary of the subject property including easements based upon a Preliminary Title Report
- Property line monuments – at property corners or offsets thereto
- Title Search – A Preliminary Title report will be ordered by our firm and prepared by Ticor Title Company

FEE: $ 6,000.00

CONTINUED ON NEXT PAGE

SITE NAME: **McKinley Elementary School**
PROPERTY ADDRESS: 349 W. Valencia Ave & 400 W. Elmwood Ave, Burbank, CA 91506
LEGAL DESCRIPTION: Lots 16 & 17, Tract No. 8153, and Lot 3, Block 76, Subdivision of Rancho Providencia and Scott Tract, and A Portion of Lot 13, Tract No. 5370

DESCRIPTION OF SERVICES:

Boundary Survey – We will provide a map including the following:

- Legal boundary of the subject property including easements based upon a Preliminary Title Report
- Property line monuments – at property corners or offsets thereto
- Title Search – A Preliminary Title report will be ordered by our firm and prepared by Ticor Title Company

Record of Survey – In compliance with Section 8762 of the Professional Land Surveyors Act, we will prepare a Record of Survey and file it with the County Engineer's office. Due to the nature of the subject parcel being composed of a portion of a larger lot, we must prepare a record of our survey computations including all measurements taken, records used, and monuments found or set.

FEE: $ 9,000.00

SITE NAME: **Miller Elementary School**
PROPERTY ADDRESS: 720 E. Providencia Ave, Burbank, CA 91506
LEGAL DESCRIPTION: Lot 8, Block 114, Subdivision of Rancho Providencia and Scott Tract, and Lots 1-3 & 18-20, Tract No. 5595, and Vacated Portions of 7th St and Alley

DESCRIPTION OF SERVICES:

Boundary Survey – We will provide a map including the following:

- Legal boundary of the subject property including easements based upon a Preliminary Title Report
- Property line monuments – at property corners or offsets thereto
- Title Search – A Preliminary Title report will be ordered by our firm and prepared by Ticor Title Company

FEE: $ 6,000.00

SITE NAME: **Providencia Elementary School**
PROPERTY ADDRESS: 1919 N. Ontario St, Burbank, CA 91505
LEGAL DESCRIPTION: A Portion of NE 1/4, SEC. 9, T1N, R14W, SBM and Parcels 1-5, P.M. 4-8

DESCRIPTION OF SERVICES:

Boundary Survey – We will provide a map including the following:

- Legal boundary of the subject property including easements based upon a Preliminary Title Report
- Property line monuments – at property corners or offsets thereto
- Title Search – A Preliminary Title report will be ordered by our firm and prepared by Ticor Title Company

FEE: $ 6,000.00

SITE NAME: **Roosevelt Elementary School**
PROPERTY ADDRESS: 850 N. Cordova St, Burbank, CA 91505
LEGAL DESCRIPTION: Lots 59-86, Tract No. 7897

DESCRIPTION OF SERVICES:

Boundary Survey – We will provide a map including the following:

- Legal boundary of the subject property including easements based upon a Preliminary Title Report
- Property line monuments – at property corners or offsets thereto
- Title Search – A Preliminary Title report will be ordered by our firm and prepared by Ticor Title Company

FEE: $ 6,000.00

CONTINUED ON NEXT PAGE

SITE NAME: **Stevenson Elementary School**
PROPERTY ADDRESS: 3333 Oak St, Burbank, CA 91505
LEGAL DESCRIPTION: A Portion of Block 43, Subdivision of Rancho Providencia and Scott Tract
DESCRIPTION OF SERVICES:

Boundary Survey – We will provide a map including the following:

- Legal boundary of the subject property including easements based upon a Preliminary Title Report
- Property line monuments – at property corners or offsets thereto
- Title Search – A Preliminary Title report will be ordered by our firm and prepared by Ticor Title Company

Record of Survey – In compliance with Section 8762 of the Professional Land Surveyors Act, we will prepare a Record of Survey and file it with the County Engineer's office. Due to the nature of the subject parcel being composed of a portion of a larger lot, we must prepare a record of our survey computations including all measurements taken, records used, and monuments found or set.

FEE: $ 11,000.00

SITE NAME: **Washington Elementary School**
PROPERTY ADDRESS: 2322 N. Lincoln St, Burbank, CA 91504
LEGAL DESCRIPTION: A Portion of SEC. 3, T1N, R14W, SBM
DESCRIPTION OF SERVICES:

Boundary Survey – We will provide a map including the following:

- Legal boundary of the subject property including easements based upon a Preliminary Title Report
- Property line monuments – at property corners or offsets thereto
- Title Search – A Preliminary Title report will be ordered by our firm and prepared by Ticor Title Company

Record of Survey – In compliance with Section 8762 of the Professional Land Surveyors Act, we will prepare a Record of Survey and file it with the County Engineer's office. Due to the nature of the subject parcel being composed of a portion of a larger lot, we must prepare a record of our survey computations including all measurements taken, records used, and monuments found or set.

FEE: $ 14,500.00

SITE NAME: **Burbank High School**
PROPERTY ADDRESS: 902 N. Third St, Burbank, CA 91502
LEGAL DESCRIPTION: Blocks 7 & 8, Tract No. 3548, and Vacated Portions of Walnut Ave and Fairmount Rd
DESCRIPTION OF SERVICES:

Boundary Survey – We will provide a map including the following:

- Legal boundary of the subject property including easements based upon a Preliminary Title Report
- Property line monuments – at property corners or offsets thereto
- Title Search – A Preliminary Title report will be ordered by our firm and prepared by Ticor Title Company

FEE: $ 6,000.00

SITE NAME: **Burroughs High School**
PROPERTY ADDRESS: 1920 Clark Ave, Burbank, CA 91506
LEGAL DESCRIPTION: Lots 1-13, Tract No. 11937, and Lots 1-12, Tract No. 11599, and A Portion of Lots 2 & 3, Block 34, Subdivision of Rancho Providencia and Scott Tract
DESCRIPTION OF SERVICES:

Boundary Survey – We will provide a map including the following:

- Legal boundary of the subject property including easements based upon a Preliminary Title Report
- Property line monuments – at property corners or offsets thereto
- Title Search – A Preliminary Title report will be ordered by our firm and prepared by Ticor Title Company

FEE: $ 6,000.00

CONTINUED ON NEXT PAGE

SITE NAME: **Monterey Park & High School**
PROPERTY ADDRESS: 1915 Monterey Ave, Burbank, CA 91506
LEGAL DESCRIPTION: Lots 74-90, Tract No. 7649
DESCRIPTION OF SERVICES:

Boundary Survey – We will provide a map including the following:

- Legal boundary of the subject property including easements based upon a Preliminary Title Report
- Property line monuments – at property corners or offsets thereto
- Title Search – A Preliminary Title report will be ordered by our firm and prepared by Ticor Title Company

FEE: $ 8,000.00

SITE NAME: **Muir Middle School**
PROPERTY ADDRESS: 1111 N. Kenneth Rd, Burbank, CA 91504
LEGAL DESCRIPTION: Blocks 2, 3, 14, 15, and A Portion of Blocks 1 & 16, Tract No. 5877, and a Vacated Portion of 7th St & Cornell Dr
DESCRIPTION OF SERVICES:

Boundary Survey – We will provide a map including the following:

- Legal boundary of the subject property including easements based upon a Preliminary Title Report
- Property line monuments – at property corners or offsets thereto
- Title Search – A Preliminary Title report will be ordered by our firm and prepared by Ticor Title Company

FEE: $ 6,000.00

SITE NAME: **Horace Mann School**
PROPERTY ADDRESS: 3401 Scott Rd, Burbank, CA 91504
LEGAL DESCRIPTION: Lot 1, Tract No. 20787
DESCRIPTION OF SERVICES:

Boundary Survey – We will provide a map including the following:

- Legal boundary of the subject property including easements based upon a Preliminary Title Report
- Property line monuments – at property corners or offsets thereto
- Title Search – A Preliminary Title report will be ordered by our firm and prepared by Ticor Title Company

FEE: $ 6,000.00

TOTAL FEE NOT TO EXCEED: $ 141,500.00

TIMEFRAME: Your Signature of Authorization** below initiates the scheduling process. Site work will commence as school administration schedule allows. Please allow 10 business days after the site work is completed for the preparation of the survey map, see #5 on the Terms and Conditions page.

PAYMENT: Invoice for services shall be provided along with the finalized survey deliverables.

If this proposal is agreeable to you, our receipt of your Signature of Authorization** below constitutes a contract for our surveying services. Thank you for considering Becker & Miyamoto, Inc. as your surveying company on this project. We are confident you will be pleased with the quality of our work and we look forward to the opportunity of working with you. If you have any questions, please call me at (323) 592-3589.



Andrew Yamashita, PLS 9961
President, Becker and Miyamoto, Inc.

Client Signature of Authorization Date

BURBANK UNIFIED SCHOOL DISTRICT
Business Services

REPORT TO THE BOARD

TO:	Members of the Board of Education
FROM:	Jason Hasty, Assistant Superintendent of Business Services
PREPARED BY:	Malihe Shokouhi, Bond Project Manager
SUBMITTED BY:	Megan Burkhart, Facilities Operations Construction Technician
DATE:	June 25, 2026
SUBJECT:	Approval of Professional Services Agreement, Greg Powell dba Architecture Plus Inc., DSA Certification Closeout Services, Various Sites (Measure ABC Bond Fund)

Background:

In 2025, the District engaged Greg Powell dba Architecture Plus Inc. under the Measure "S" Bond program to assist with the closeout and certification of twelve (12) school projects that had not received final certification from the Division of the State Architect (DSA). Since May 2025, Architecture Plus Inc. has successfully obtained DSA certification for seven (7) of the twelve (12) projects.

Five (5) projects remain uncertified due to unexpected closeout issues that require additional architectural and engineering design work, inspection support, documentation, and coordination with DSA. The remaining DSA Application Numbers (A#s) are:

- 03-119964
- 03-117865
- 03-118237
- 03-102304
- 03-115796

Measure "S" funding ends at the close of Fiscal Year 2025-2026 and is no longer available to fund the remaining certification work. A new professional services agreement funded by Measure ABC is needed in order to complete the required DSA closeout and certification process for the remaining five projects.

Discussion/Issues:

Final DSA certification is legally required to close out these previously completed school construction projects. In addition, the District is unable to obtain approval for new construction projects until the prior uncertified projects are resolved and certified by DSA.

Architecture Plus Inc. has already performed site visits, reviewed available documentation, coordinated with DSA, and worked with various engineering disciplines related to the remaining uncertified projects. Through that process, Architecture Plus Inc. determined that the original estimates for completing the remaining closeout work were insufficient due to unforeseen project conditions and additional DSA requirements.

The proposed scope of work includes continued investigation, analysis of existing conditions, site visits, DSA coordination, preparation and submission of required documentation, architectural support,

engineering design coordination, and inspection-related support necessary to obtain DSA certification for the remaining projects. The proposal also includes anticipated reimbursable expenses, including printing, travel, mileage, DSA-related expenses, MEP services for the Burbank High School project, and possible future expenses such as nondestructive testing and lab fees, as authorized by the District.

Approval of this agreement will allow the District to complete closeout of the remaining uncertified projects and clear the way for future school construction projects to move forward through the DSA approval process.

Fiscal Impact:

Expenditures not to exceed $54,730 (Measure ABC Bond Fund).

Recommendation:

Business Services recommends that the Board of Education approve the Professional Services Agreement between Greg Powell dba Architecture Plus Inc. and the Burbank Unified School District for Division of the State Architect (DSA) certification closeout services at various sites, not to exceed $54,730 (21.0-00000.0-91008-85000-6282-75200000, Measure ABC Bond Fund), and that authority to sign the agreement be exercised pursuant to BUSD – AR3314, as presented.

Architecture Plus Inc.

1045 Foothill Blvd., La Canada, CA 91011

P r o p o s a l

DATE: 5-22-26

TO: Burbank Unified School District
Malihe Shokouhi
Project Manager, Bond Management
1900 W. Olive Ave.
Burbank, CA 91506

FOR: Burbank Unified School District
Various Projects – Closeout Services

Background:
Our firm was hired by Burbank USD to assist with the closeout of 12 uncertified projects. We have successfully received certification for 7 projects as of today's date. There are still 5 uncertified projects that it BUSD wishes to have closed and certified with DSA.

- 03-119964, 03-117865, 03-118237, 03-102304, and 03-115796

Scope of Services:
After conducting multiple site visits, reviewing available documentation, coordinating with DSA and various engineering disciplines, we have determined that our original estimates of time needed to closeout the above referenced projects are too low.

Services for the project for the above A#s are estimated to require the hours shown in the table below. Our hourly rates are shown below. Invoices are to be billed on a time and material basis. Reimbursable expenses will be billed at actual cost plus 5%, such expenses will be generated only in connection with the operation of projects assigned and only to the extent authorized by the District. Mileage will be billed at current IRS rates.

Our anticipated reimbursable expenses include printing, travel expenses, and mileage. We have received a quote for MEP services for the Burbank HS project (A#03-117865), which we have attached to this change order proposal. After several site visits, and communication with DSA, we anticipate additional possible future reimbursable expenses (such as nondestructive testing and lab fees) for multiple projects. Current anticipated reimbursable expenses are not-to-exceed $35,000.

Our proposal is based on how many hours we anticipate each project will require in order to obtain certification. Closeout services are estimated to be $19,730 (any additional costs will be approved by the District).

The total anticipated not-to-exceed amount for this change order including closeout services and reimbursable expenses is **$54,730.**

Architecture Plus Inc.

1045 Foothill Blvd., La Canada, CA 91011

Principal In Charge……$220
Project Manager……...$170
Contract Administrator……$85

Roles and responsibilities of each team member:

- Principal in Charge: Oversee project operations, including defining project objectives and deliverables. Assumes AOR responsibility for the closeout portion of projects that require a new AOR. Interprets various codes and regulations as applicable.
- Project Manager: Performs site visits and analyzes existing conditions of projects. Creates CCDs and submits for approval to DSA. Analyzes drawings and specs in order to determine project requirements for certification.
- Contract Administrator: Manages all DSA correspondence regarding closeout, performs DSA Archive research, communicates directly with various disciplines in order to obtain required paperwork.

A#	Project Name	Current Status	Additional Hours Needed		
			Principal	PM	Admin
03-119964	Walt Disney ES	Most documents have been received. Ongoing welding issues.	0	0	40
03-117865	Burbank HS	Site conditions do NOT match drawings. Need MEP calcs/CCD.	8	20	20
03-118237	Providencia ES	Site conditions do NOT match drawings. CCD pending approval with DSA.	8	20	10
03-102304	Providencia ES	Submitted to DSA, waiting on DSA.	0	0	0
03-115796	Jefferson ES	Working with lab & DSA on possible solutions.	8	10	20
		Total:	24	50	70

The District is solely responsible for all re-opening fees and any further fees that DSA requires in order to successfully close out each project, as noted above as one of our reimbursable expenses.

This proposal is based on our current insurance package, which was established to provide our clients meaningful insurance coverage while maintaining moderate fees. (In recognition of the relative risks and benefits of the project to both the client and the design professional, the risks have been allocated such that the client agrees to the maximum extent permitted by law, to limit the design professional's liability for the

client's damages to the design professional's fee. This limitation shall apply regardless of the cause of action or legal theory pled or asserted).



Accepted Date: 5/22/26
Shelby Parsons, Architecture Plus

Accepted Date:
Client

Pacific Engineers Group
Consulting Electrical Engineers
Established in 1978

Anthony Fajardo, PE
Jimmy Fong, PE

May 12, 2026

Shelby Parsons
Architecture Plus, Inc
1045 Foothill Blvd
La Canada, CA 91011

Re: ***Burbank HS Makerspace CCD***
902 N 3rd St,
Burbank, CA 91502

Dear Malihe:

Please accept this letter as our proposal for providing electrical, fire alarm, and mechanical engineering services for the referenced project. The scope of work is for the CCD of the Makerspace building to as built conditions based on the existing set of plans based on our email coordination. There is no construction administration as the project is already completed.

Our work will include:

1. Site verification of existing conditions.
2. Coordination with Architect, Consultants, and all other members of the design team.
3. Preparation of drawings for resubmittal to DSA for a CCD approval.

Our proposed total fee is **$20,040.00**
Our fee for each discipline is as follows:
Electrical/Fire Alarm**: $9,280.00**
Mechanical: **$10,760.00**

Our fee schedule is as follows:
Kickoff/Site: **$1,480.00**
CCD Drawings: **$14,800.00**
DSA Approved: **3,760.00**

Sincerely,
PACIFIC ENGINEERS GROUP

Anthony Fajardo, PE
Principal

Benedict Tuazon, PE
Mechanical Engineer

1106 W Magnolia Boulevard, Suite A
Burbank, California 91506
www.pacificeng.net
T: (818) 859-7081