BURBANK UNIFIED SCHOOL DISTRICT
BOARD OF EDUCATION
REGULAR MEETING

Thursday, May 7, 2026

Closed Session - 5:00 p.m.
Open Session - 6:00 p.m.

Burbank City Hall
275 E. Olive Avenue
Burbank, California

AGENDA

The entire agenda packet is available for review online at www.burbankusd.org/boemeetings; at the District Office Building, Superintendent's Office, 1900 W. Olive Ave., Burbank, 91506; and at the Reference Desk in all Burbank City Libraries at: 110 N. Glenoaks, Burbank, 91502; 300 N. Buena Vista, Burbank, 91505; and 3323 W. Victory Blvd., Burbank, 91505.

1. CALL TO ORDER

1.a NOTICE TO THE PUBLIC
The District is providing alternatives to in-person attendance for viewing and participating. Any individual or group representative may address the Board of Education on any agenda item or subject within its jurisdiction during one of the three Public Comments sections.

Instructions for Virtual Public Speakers Who Wish to Address the Board:

1. Speakers who wish to provide a Public Comment virtually should sign up at this link: https://forms.gle/XrYpZ7M2hMb1LJCS7 3pm on Wednesday, May 6th. Please indicate if your comment pertains to (1) an item on this agenda, or (2) a subject within the jurisdiction of the Board of Education. Closed Session Public Comments must be given in person.

2. The Zoom Webinar will open at 5:30 p.m. Speakers are asked to rename their Zoom profile to indicate their full name to expedite this process. Please note that only those individuals who have signed up to speak prior to 3:00 p.m. on the day before, will be allowed to enter the Zoom Webinar. Speakers will receive an email Wednesday afternoon with the Zoom Webinar login details.

3. When it is time for a speaker to address the Board, the speakers name will be called and the speaker should activate their microphone and camera. Speakers must be present in the Zoom Webinar when their name is called in order to address the Board. Speakers are also requested to state their name (and their pronouns, if desired) prior to addressing the Board. Please note that the chat function will be disabled.

4. After a speaker completes their public comment, or if the five-minute (5) time limit has

been reached, the speaker will be removed from the Zoom Webinar and can continue watching the meeting by streaming it at www.burbankusd.org/boemeetings

5. If you would like to make a Public Comment and require Armenian, Spanish, or ASL translation, please email stephaniebeauregard@burbankusd.org prior to 3:00 p.m. the day before the meeting to receive a registration link.

2. REQUESTS TO ADDRESS THE BOARD

2.a Public Communications on Closed Session Agenda Items (In-Person Only)
An individual or group representative may address the Board of Education on any Closed Session agenda item by completing a white request card. Speakers are requested to state their name prior to speaking to the Board. Not more than five (5) minutes may be allotted to each speaker, except by unanimous consent of the Board of Education. The Superintendent may refer the matter to the proper department for review.

2.b Staff Responses

2.c Board Members' Responses

3. CLOSED SESSION
The Board will meet in Closed Session for the purpose of the following:

3.a Conference with Labor Negotiator, Pursuant to Government Code 54957.6
Agency Negotiator: Jason Hasty
Employee Organizations: Burbank Teachers Association (BTA) & California School Employees Association (CSEA)

3.b Public Employee Discipline/Dismissal/Release Pursuant to Government Code 54957

3.c Conference with Legal Counsel - Existing Litigation Pursuant to Government Code Â§54956.9 (b)(1) and (b)(3)(A)
Final Settlement Agreement for Special Education Students 960025725 and 960046052

4. RECONVENE IN PUBLIC SESSION/PLEDGE OF ALLEGIANCE/LAND ACKNOWLEDGEMENT
When the Board of Education reconvenes in Public Session, the Board may make any required disclosures regarding actions taken in Closed Session or adopt any appropriate resolutions concerning these matters.

â€œWe acknowledge the traditional, ancestral, unceded territory of the Chumash, Tongva, FernandeÃ±o Tataviam, and First Nations on which we are learning, educating, and living.â€

5. REPORTING ON CLOSED SESSION

6. ADJUSTMENTS TO THE AGENDA
The Board President will announce any requests for adjustments to the meeting agenda.

7. ITEMS FOR FUTURE AGENDAS

8. PRESENTATIONS / RECOGNITIONS

Burbank Council PTA Annual Highlights

9. REPORTS FROM THE BOARD AND STAFF

9.a Student Representatives
Natalie Garibyan, Burbank High School; Haily Hoang, John Burroughs High School; and Hayk Smbatyan, Monterey High School, will report on activities at their respective schools.

9.b Burbank Teacher's Association (BTA), California School Employees Association (CSEA), Burbank Association of School Administrators (BASA)
Sarah Schwartz; BTA President, Laura Bauman, CSEA President, and Laura Flosi, BASA President will report on association business.

9.c Reports from the Superintendent
Oscar Macias, Interim Superintendent, will report on items of interest to the Board of Education and the community.

10. REQUESTS TO ADDRESS THE BOARD

10.a Public Communications on Agenda Items and on Any Subject Within the Jurisdiction of the School Board
An individual or group representative may address the Board of Education on items on the agenda and on any subject within its jurisdiction by completing a white request card. Speakers are requested to state their name prior to speaking to the Board. Not more than five (5) minutes total may be allotted to each speaker, except by unanimous consent of the Board of Education. The president of the Board of Education has the discretion to prioritize speakers with precedence given to students and employees. The Superintendent may refer the matter to the proper department for review.

10.b Superintendent's Comments
Oscar Macias, Interim Superintendent, will respond to public comment.

10.c Board Members' Responses
Board Members will respond to public comment.

11. REPORTS TO THE BOARD

11.a Measure ABC Bond Program Update
Jason Hasty, Interim Assistant Superintendent of Business Services, will present the Measure ABC Bond Program Update to the Board of Education, as presented.
Measure ABC Bond Program Update 050726.pdf

12. NEW AND/OR UNFINISHED BUSINESS

12.a Adoption of Resolution 41 Proclaiming the May as the Burbank Unified School Districts Asian American and Pacific Islander Heritage Month
Peter Knapik, Assistant Superintendent of Educational Services, recommends that the Board of Education adopt Resolution 41 Proclaiming May 2026 as the Burbank Unified School District Asian American and Pacific Islander Heritage Month, as presented.
Resolution 41 Asian American Heritage Month 5 7 26.pdf

12.b Adoption of Resolution 42 - Proclaiming May 2026 as the Burbank Unified School District's Jewish American Heritage Month
Peter Knapik, Assistant Superintendent of Educational Services, recommends that the Board of Education adopt Resolution 42 -proclaiming May 2026 as the Burbank Unified School District's Jewish American Heritage Month, as presented.
Resolution 42 Jewish American Heritage Month 5 7 26.pdf

12.c Adoption of Resolution 43 in Support of Pride Month, June, 2026
Peter Knapik, Assistant Superintendent of Educational Services, recommends that the Board of Education adopt Resolution 43 in Support of Pride Month, June, 2026, as presented.
Resolution_43_Pride Month 5 7 26.pdf

12.d Adoption of Resolution 44 Proclaiming the May as the Burbank Unified School Districts Mental Health Awareness Month
Peter Knapik, Assistant Superintendent of Educational Services, recommends that the Board of Education adopt Resolution 44 Proclaiming May 2026 as the Burbank Unified School District Mental Health Awareness Month, as presented.
Resolution 44 Mental Health Awareness Month 5 7 26.pdf

12.e Adoption of Resolution 45 Proclaiming May 18, 2026 as Speech-Language Pathologist Day
Peter Knapik, Ed.D., Assistant Superintendent of Educational Services, recommends that the Board of Education adopt Resolution 45 proclaiming May 18, 2026 as Speech-Language Pathologist Day, as presented.
SPED Adoption of Resolution 45 Speech-Language Pathologist Day.pdf

12.f First Reading of Revised Board Policy and Administrative Regulations
Peter Knapik, Assistant Superintendent of Educational Services, will facilitate the Board s first reading of the proposed revision to Board Policies and Administrative Regulations, as presented.
First Reading Board Policies and Administrative Regulations Related to Discipline.pdf

12.g Approval of Agreement with Houghton Mifflin Harcourt for English 3D with Writable Curriculum from July 1, 2026 through June 30, 2027
Peter Knapik, Assistant Superintendent of Educational Services, recommends that the Board of Education approve the Agreement between the Burbank Unified School District and Houghton Mifflin Harcourt for English 3D with Writable paid by Title III, English Learner funding, not to exceed $24,102.73, under various object codes (01.0-42030.1-0-47600-10000-XXXX-4310000), effective July 1, 2026 through June 30, 2027, and that authority to sign this agreement be exercised pursuant to BUSD AR 3314, as presented.
Approval of Agreement with HMH for English 3D (002).pdf

12.h Approval of Agreement with Right at School for Child Care Paid by Expanded Learning Opportunities Program from July 1, 2026 through June 30, 2027
Peter Knapik, Assistant Superintendent of Educational Services, recommends that the Board of Education approve the Agreement between the Burbank Unified School District and Right at School to for childcare services of eligible families/students and a percentage of administrative costs based on ELOP-eligible students paid by the Expanded Learning Opportunities Program (ELOP), not to exceed $1,000,000 (01.0-2600.0-0-00000-27000-5810-7429000), effective July 1, 2026 through June 30, 2027, and that authority to sign this agreement be exercised pursuant to BUSD AR 3314, as presented.

Agreement with Right at School 5.7.pdf

12.i Approval of 2025-2026 Expanded Learning Opportunities Program Plan
Peter Knapik, Assistant Superintendent of Educational Services, recommends that the Board of Education approve the Expanded Learning Opportunities Program Plan effective July 1, 2025, through June 30, 2026, and that authority to sign this agreement be exercised pursuant to BUSD AR 3314, as presented.
Approval of ELOP Plan 2025-2026.pdf

12.j Approval of Contract with Engaging Hearts & Minds for Summer School Expanded Learning Opportunities Program(ELOP)
Peter Knapik, Assistant Superintendent of Educational Services, recommends that the Board of Education approve the agreement with Engaging Hearts & Minds for the Summer School Expanded Learning Opportunities Program (ELOP) curriculum and services, for a total amount not to exceed $33,680 (01.0-26000.0-11100-10000-4250-548-0000), effective May 1, 2026 through August 30, 2026, and that authority to sign the agreement be exercised pursuant to BUSD-AR 3314, as presented.
Here is a link for more information on this organization:
https://www.engagingheartsandminds.org/about
Agreement with Engaging Hearts and Minds-Summer School 2026.pdf

12.k Approval of Agreement with Family Service Agency of Burbank to Provide School-Based Counseling Services in 2026-2027
Peter Knapik, Assistant Superintendent of Educational Services, recommends that the Board of Education approve the agreement between the Burbank Unified School District and the Family Service Agency of Burbank, to provide individual and group counseling to elementary and secondary school pupils, as required, effective July 1, 2026 through June 30, 2027, not to exceed $142,000
(010-01500.0-71500-31100-5810-7422000) LCAP supplemental funds, and that the authority to sign the agreement be exercised pursuant to BUSD -AR 3314, as presented.
FSA SBC 5 7 26.pdf

12.l Approval of Agreement for Professional Services Provided by Family Services Agency of Burbank for Special Education Students
Peter Knapik, Assistant Superintendent of Educational Services, recommends that the Board of Education approve the agreement between the Burbank Unified School District and the Family Services Agency of Burbank to provide IEP-based mental health services for qualifying Special Education students, effective July 1, 2026 through June 30, 2027, not to exceed $530,000 (01.0-65460.0-57601-11800-581440000), and the authority to sign the contract be exercised pursuant to BUSD-AR 3314, as presented.
FSA SPED 5 7 26.pdf

12.mAdoption of Resolution 46 Implementing Certificated Layoffs
Human Resources Services, recommends that the Board of Education adopt Resolution 46 Implementing Certificated Layoffs, as presented.
Adoption of Resolution 46 Implementing Certificated Layoffs.pdf

12.n Adoption of Resolution 47 Implementing Classified Layoffs
Human Resources Services, recommends that the Board of Education adopt Resolution 47 Implementing Classified Layoffs, as presented.

Adoption of Resolution 47 Implementing Classified Layoffs.pdf

12.o Approval of Resolution 48 Declaring Salaries Indefinite and to Authorize Regular and Retroactive Pay Changes for the 2026-2027 School Year
Human Resources Services, recommends that the Board of Education approve Resolution 48 Declaring Salaries Indefinite and to Authorize Regular and Retroactive Pay Changes for the 2026-2027 School Year, as presented,
Adoption of Resolution 48 Declaring Salaries Indefinite and to Authorize Regular and Retroactive Changes in Pay for the 2026-2027 School Year.pdf

12.p Approval of Revised Job Description for Director of Arts and Career Technical Education (CTE) on Certificated Supervisors and Managers Salary Schedule A, Range A
Human Resources Services, recommend that the Board of Education approve the Revised Job Description for Director of Arts and Career Technical Education (CTE) on Certificated Supervisors and Managers Salary Schedule A, Range A, effective May 8, 2026, as presented.
Approval of Revised Job Description for Director of Arts and Career Technical Education (CTE) on Certificated Supervisors and Managers Salary Schedule A, Range A.pdf

12.q Approval of Lease Agreement Circle II / Wells Fargo Vendor Financial Services, LLC
Administrative Services recommends that the Board of Education approve the financial agreement between Burbank Unified School District and Wells Fargo Vendor Financial Services, LLC to acquire copiers and printers under a 60-month fair market value lease, effective July 1, 2026 through June 30, 2031, not to exceed $1,300,000.00 (01.0-00000.0-00000-72000-5611-0000000) and that the authority to sign the agreement be exercised pursuant to BUSD-AR 3314, as presented.
M&S Technology Group Lease 050726.pdf

12.r Approval of Maintenance Agreement with Circle MSP
Administrative Services recommends that the Board of Education approve an agreement between Burbank Unified School District and Circle MSP to provide service and maintenance for copiers and printers for 60 months, effective July 1, 2026 through June 30, 2031, not to exceed $650,000.00 (01.0-00000.0-00000-72000-5631-0000000) and that the authority to sign the agreement be exercised pursuant to BUSD-AR 3314, as presented.
Circle MSP Maintenance Agreement 050726.pdf

12.s Approval of Purchase, Rush Trucks (Cafeteria Fund Fund 13)
Administrative Services, recommends that the Board of Education approve the agreement between Burbank Unified School District and Rush Trucking to provide its product May 9, 2026. (13.0-53100.0-00000-37000-4410-7490000), and that authority to sign the contract pursuant to BUSD AR 3314, as presented.
Rush Trucks 050726.pdf

12.t Approval of the 2026-2027 Regular Board of Education Meeting Dates and Amendment to Bylaws 9320:Meetings and Notices
Oscar Macias, Interim Superintendent, recommends that the Board of Education approve its regular meeting dates for the 2026-2027 school year and amend Bylaw 9320:Meeting and Notices, as presented.
Approval of 2026-2027 Regular BOE Meeting 050726.pdf

13. CONSENT AGENDA

All items on the Consent Agenda are considered by the Superintendent to be of a routine nature and are acted on with one motion. Any recommendation may be removed from the Consent Agenda at the request of any Board member and acted on separately.

13.a Approval of Minutes
Minutes 4.9.26 UNOFFICIAL AM.pdf

13.b Approval of Minutes
Minutes 4.16.26 UNOFFICIAL AM.pdf

13.c Approval of the 2025-2026 Purchase Order Report
Administrative Services recommends that the Board of Education approve purchase orders for 2025-2026 as listed through April 13, 2026, as presented.
2025-2026 PURCHASE ORDER REPORT.pdf

13.d Approval of Personnel Report Number 25-26-19
Human Resources Services, recommends that the Board of Education approve Personnel Report Number 25-26-19, covering Certificated and Classified personnel, and consisting of Pages 1 to 7 inclusive, as presented.
Personnel Report 25-26-19.pdf

13.e Approval to Amend Agreement with Childcare Careers LLC and The Education Team
Peter Knapik, Assistant Superintendent of Educational Services, recommends that the Board of Education agree to provide additional funding for Child Care Careers (CCC) to provide substitutes for child care centers for the remainder of the 2025-2026 school year not to exceed $300,000 (120-90602-0-11100-10000-5850- 754-000-00) and that authority to sign the agreement be exercised pursuant to BUSD-AR 3314, as presented.
Board Report May 7th 2026.pdf

13.f Approval of Instructional Consultant Services
Peter Knapik, Assistant Superintendent of Educational Services, recommends that the Board of Education approve the instructional consultant services for on-site student learning support and staff development and exercise authority to sign the agreements pursuant to BUSD-AR 3314, as presented.
Approval of Instructional Consultants redacted 5 7 26.pdf

13.g Ratification of Agreement for Instructional Consultant Services
Peter Knapik, Assistant Superintendent of Educational Services, recommends that the Board of Education ratify the instructional consultant services for on-site student learning support and staff development and exercise authority to sign the agreements pursuant to BUSD-AR 3314, as presented.
Ratification of Instructional Consultants 5 7 26.pdf

13.h Approval of University Agreement- San Jose University
Human Resources Services, recommends that the Board of Education approve the University Agreement between the Burbank Unified School District and San Jose University, to provide educational field experience for Speech Language Pathologists effective May 8, 2026 through until terminated five (5) years on May 8, 2031, and that authority to sign the Agreement be exercised pursuant to BUSD--AR 3314, as presented.
Approval of University Agreement- San Jose University.pdf

13.i Approval of Agreement between Burbank Adult School and Evolo AI
Peter Knapik, Assistant Superintendent of Educational Services, recommends that the Board of Education approve the Burbank Unified School District/Burbank Adult School and Evolo AI agreement, not to exceed $ 15,000.00 (11.0-63910.0-41102-10000-5840-5330000) - $3,750 (11.0-63910.0-41104-10000-5840-5330000) - $7,500, (11.0-63910.0-41106-10000-5840-5330000), as presented.
BAS EVOLO AI 5 7 26.pdf

13.j Approval of Agreement between Burbank Adult School and Edmentum Learning Software for the 2026-2027 CTE program
Peter Knapik, Assistant Superintendent of Educational Services, recommends that the Board of Education approve the agreement between Burbank Adult School and Edmentum, not to exceed $19,914.00 (11.0-63910.0-41104-10000-5840-5330000) and the authority to sign the Agreement be exercised pursuant to BUSD â€“ AR 3314 as presented.
BAS - Edmentum Agreement-CTE - 2026-2027 5 7 26.pdf

13.k Approval of Agreement for Professional Services Provided by Hathaway-Sycamores Child and Family Services for Special Education
Peter Knapik, Assistant Superintendent of Educational Services recommends that the Board of Education approve an agreement between the Burbank Unified School District and Hathaway Sycamores, to provide Educationally Related Mental Health services for Special Education students at Magnolia Park School, not to exceed $236,453.44 (1.0-33270.0-57601-11800-5810-7440000 = $198,620.88 and 01.0-65460.0-57601-1180-5810-7440000 = $37,832.56). Effective July 1, 2026 through June 30, 2027, and that authority to sign the agreement be exercised pursuant to BUSD-AR 3314, as presented.
SPED Professional Services Hathaway-Sycamores_Mag Park.pdf

13.l Approval of Agreement for Professional Services Provided by Hathaway-Sycamores Child and Family Services for Special Education
Peter Knapik, Assistant Superintendent of Educational Services recommends that the Board of Education approve an agreement between the Burbank Unified School District and Hathaway Sycamores, to provide Educationally Related Mental Health services for Special Education students at Magnolia Park School, not to exceed $489,778.39 (01.0-65460.0-57601-1180-5810-7440000) Effective July 1, 2026 through June 30, 2027, and that authority to sign the agreement be exercised pursuant to BUSD-AR 3314, as presented.
SPED Professional Services Hathaway-Sycamores_SELPA Program.pdf

13.mApproval of Amended Agreement for Professional Services Provided by Sarah Knauff Speech-Language Pathology, Inc. for Special Education
Peter Knapik, Assistant Superintendent of Educational Services, recommends that the Board of Education amend an agreement between Burbank Unified School District and Sarah Knauff Speech-Language Pathology, Inc., to provide a Speech-Language Pathologist (SLP), not to exceed $212,450 (01.0-65000.0-57602-11901-5850-7440000), effective July 1, 2025 through June 30, 2026, and that authority to sign the agreement be exercised pursuant to BUSD-AR 3314, as presented.

Note: The original approval date was June 18, 2025 for a total not to exceed $202,450. Due to an increase in student need, this amendment adds an additional $10,000 to the agreement for a new not to exceed total of $212,450.
SPED Professional Services Sarah Knauff_Amendment.pdf

13.n Approval of Amended Agreement for Professional Services Provided by LRA Interpreters, Inc. for Special Education

Peter Knapik, Assistant Superintendent of Educational Services, recommends that the Board of Education amend an agreement between the Burbank Unified School District and LRA Interpreters, Inc., to provide interpreting and translation services for Burbank Special Education students, not to exceed $250,000 (01.0-65000.0-57602-11901-5850-7440000), effective July 1, 2025 through June 30, 2026, and that authority to sign the agreement be exercised pursuant to BUSD-AR 3314, as presented.

Note: The original approval date was June 18, 2025 for a total not to exceed $200,000. Due to increased need of interpreting and translation, this amendment adds an additional $50,000 for a new not to exceed amount of $250,000.

SPED Professional Services LRA Interpreters_Amendment.pdf

13.o Approval of Agreement for Professional Services Provided by Adams Silva and McNally LLP for Special Education

Peter Knapik, Assistant Superintendent of Educational Services, recommends that the Board of Education approve an agreement between Burbank Unified School District and Adams Silva & McNally LLP, to perform specific services, not to exceed $400,000 (01.0-65000.0-50010-21000-5820-7440000), effective July 1, 2026 through June 30, 2027 and that authority to sign the agreement be exercised pursuant to BUSD-AR 3314, as presented.

SPED Professional Services Adams Silva and McNally.pdf

13.p Approval of Agreement for Professional Services Provided by Gary D Stromberg & Associated, LLC for Special Education

Peter Knapik, Assistant Superintendent of Educational Services, recommends that the Board of Education approve an agreement between Burbank Unified School District and Gary D Stromberg & Associates, LLC, to provide a Certified Occupational Therapist Assistant (COTA), not to exceed $114,975 (01.0-65000.0-57602-11901-5850-7440000), effective July 1, 2026 through June 30, 2027, and that authority to sign the agreement be exercised pursuant to BUSD-AR 3314, as presented.

SPED Professional Services Gary D Stromberg_COTA.pdf

13.q Approval of Final Settlement Agreement (Special Education)

Peter Knapik, Assistant Superintendent of Educational Services, recommends that the Board of Education approve Final Settlement Agreement for Special Education student 960025725, total not to exceed $29,000, (01.0-65000.0-50010-36000-5813-7440000), August 13, 2025 through July 31, 2026 and that authority to sign the agreement be exercised pursuant to BUSD-AR 3314, as presented.

SPED Student 960025725 Settlement Agreement.pdf

13.r Approval of Final Settlement Agreement (Special Education)

Peter Knapik, Assistant Superintendent of Educational Services, recommends that the Board of Education approve Final Settlement Agreement for Special Education student 960046052, total not to exceed $4,000, (01.0-65000.0-50010-36000-5813-7440000), April 8, 2026 through May 27, 2027 and that authority to sign the agreement be exercised pursuant to BUSD-AR 3314, as presented.

SPED Student 960046052 Settlement Agreement.pdf

13.s Approval of Award of Contract, Playpower LT Farmington Inc., Furnish and Install Retrofit

of TK Playground Equipment, Ralph Waldo Emerson, Walt Disney, Bret Harte, Thomas Jefferson, William McKinley, Providencia, George Washington, Theodore Roosevelt Elementary Schools (Growth Funds)
The Administrative Services Department recommends that the Board of Education approve the contract between Burbank Unified School District and PlayPower LT Farmington Inc., for the Furnish and Install Retrofit of the TK Playground Equipment at the schools below, effective May 8, 2026 through May 7, 2027, not to exceed $152,315.01, Growth Funds, and that authority to sign the agreement be exercised pursuant to BUSD-AR 3314, as presented, as follows:
Ralph Waldo Emerson, $9,314.04 (25.0-00000-91006-85000-6170-2030000)
Walt Disney, $17,416.58 (25.0-00000-91006-85000-6170-2010000)
Bret Harte, $29,976.06 (25.0-00000-91006-85000-6170-2050000)
Thomas Jefferson, $31,824.59 (25.0-00000-91006-85000-6170-2060000)
William McKinley $3,703.63 (25.0-00000-91006-85000-6170-2090000)
Providencia, $20,531.21 (25.0-00000-91006-85000-6170-2130000)
George Washington, $8,825.31 (25.0-00000-91006-85000-6170-2160000)
Theodore Roosevelt, $30,723.59 (25.0-00000-91006-85000-6170-2140000)
5_7 PlayPower Playgrounds.pdf

13.t Approval of Agreement for Professional Services, Webb Design (General Fund)
Administrative Services, recommends that the Board of Education approve the agreement between Burbank Unified School District and Webb Foodservice Design to provide professional foodservice planning services in the amount of $15,000 effective May 8, 2026 (01.0-53100.0-00000-37000-5880-7490000) and that authority to sign the contract pursuant to BUSD AR3314, as presented.
Webb Design 050726.pdf

14. REPORTS FROM BOARD MEMBERS

14.a Reports from Board Members
Board of Education members will report on items within the jurisdiction of the Board.

15. ADJOURNMENT

Burbank Unified School District
Administrative Services

REPORT TO THE BOARD

TO:	Members of the Board of Education
FROM:	Administrative Services
PREPARED BY:	Administrative Services
SUBMITTED BY:	Terri Ramirez-Adams, Senior Administrative Assistant
DATE:	May 7, 2026
SUBJECT:	Measure ABC Bond Program Update

Background:

On November 5, 2024, voters approved Measure ABC, authorizing the issuance of General Obligation Bonds to support facility improvements throughout the District.

Discussion/Issues:

The District continues to implement Measure ABC in alignment with the Facility Master Plan and established priorities.

This presentation will provide an overview of the Measure ABC Bond Program, including current financial status, project progress, prioritization of projects, and future planning considerations.

Fiscal Impact:

Measure ABC expenditures are funded through voter-approved General Obligation Bonds. There is no impact to the District's General Fund.

Recommendation:

Jason Hasty, Interim Assistant Superintendent of Business Services, will present the Measure ABC Bond Program Update to the Board of Education, as presented.

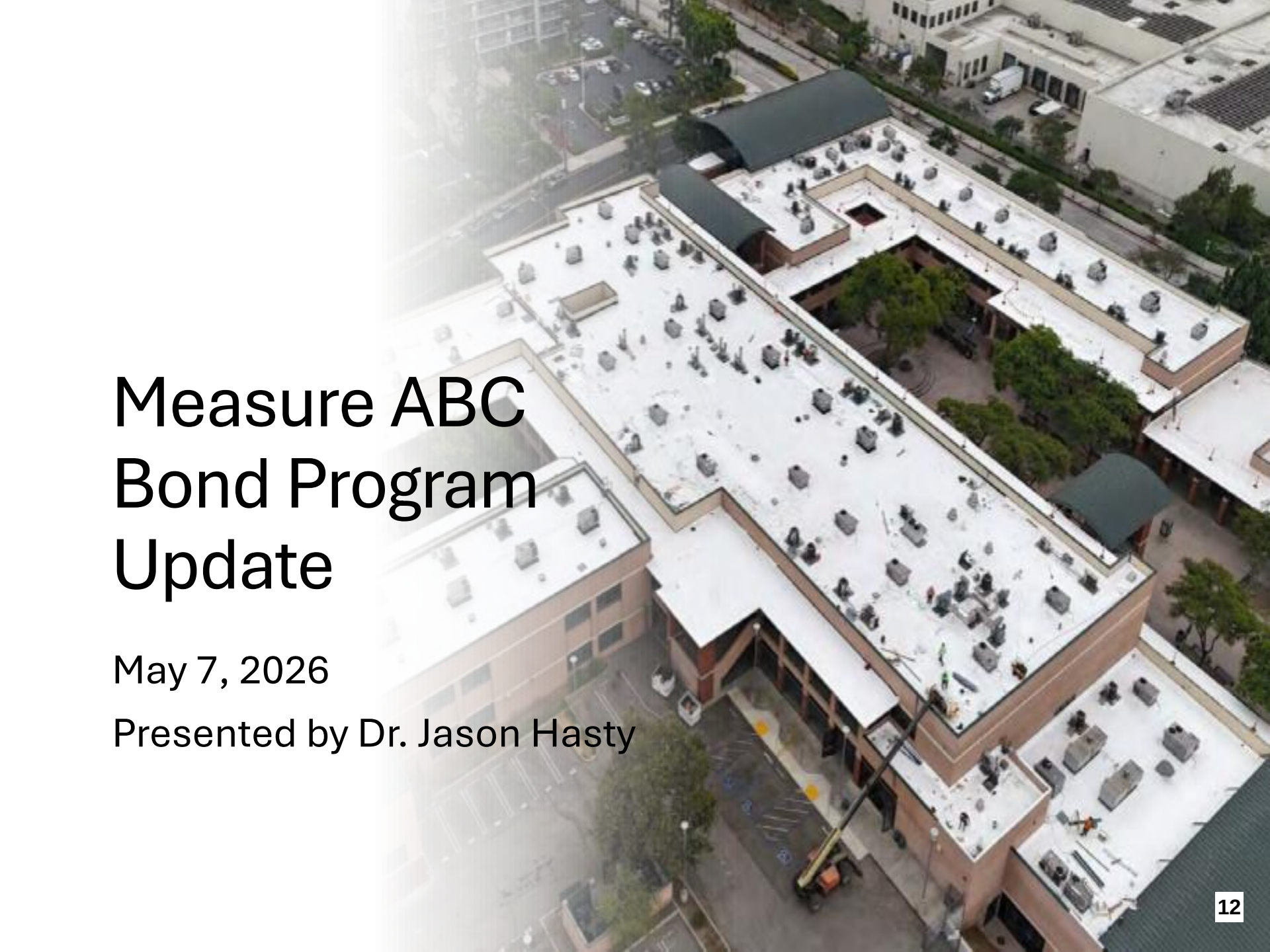

Measure ABC Bond Program Update

May 7, 2026

Presented by Dr. Jason Hasty

Facility Master Plan – Projects by Priority (Approx. Costs)

Priority 1A	Cost	Priority 1B	Cost	Priority 2	Cost	Priority 3	Cost
Exterior Walls/Doors/Windows	$28.2M	Softball Fields	$5.4M	New Buildings (5 Sites)	$55.4M	Portables	$1.9M
Roofing	$47.9M	ADA / Equitable Access	$119.3M	Full Modernization	$855.7M	OT/PT Improvements	$1.0M
Classroom Technology	$14.7M	Elevators / Lifts	$4.7M	Light Modernization	$11.9M	Wellness Center Reconfig	$3.2M
Tech Infrastructure	$23.7M			Classroom Furniture	$33.4M	STEM / STEAM Reconfig	$3.7M
Security Reconfiguration	$1.3M			Site Improvements	$19.2M	Science Electives	$13.4M
New Fencing	$0.2M			Parking / Asphalt	$6.7M	Kitchen Overhaul	$29.5M
Fire Alarm / Suppression	$1.5M			Lunch Shelters	$6.5M	Dining Refresh	$5.5M
Water Distribution	$0.9M			Shade Structures	$9.0M	Restroom Conversions	$2.2M
Electrical Distribution	$23.2M			Landscape / Fields	$4.0M	Performing Arts	$31.9M
Sewer Systems	$2.2M			Parking Garage	$9.1M		
				Solar / Canopies	$38.7M		
				Play Structures	$1.6M		
				Play Shade	$1.2M		
				Rubber Surfacing	$0.4M		
				HVAC Systems	$46.6M		
				Lighting	$1.1M		
				Plumbing Fixtures	$7.5M		
				EMS Controls	$3.6M		

Project Ranking by Series

SERIES 1 (80 MILLION)	SERIES 2 (80 MILLION)	SERIES 3 (80 MILLION)
1. Roofing Projects 2026 –9 sites (18 Million)	Roofing Project 2027 (10 million)	Roofing Project 2028/29 (34 million)
2. Tech Infrastructure Phase 1 and 2 (Data Center/Chromebooks/PA Systems)	Tech Infrastructure Phase 2 (3-5 million)	HVAC Projects (23 million)
3. Adult School- Storm Drains & Landscape Improvement ($1.3 mil)	Two Girls Softball Fields & 1 Parking Garage (11 million)	Windows, Walls, Doors (7 mil)
4. HS Football Field: Replace of Turf: JBHS	HVAC Projects (23 million)	Tech Infrastructure Phase 3 (3-5 million)
5. BHS - Pool Storage Bldg.(1.5 mil)	Elevators (4 million)	
6. JBHS & BHS Emergency Lighting Controls (815K)	Front Entries: Security Reconfiguration Projects (Dev Fees: Priority 1A) (1.6 Million)	
	Windows, Walls, Doors (7 mil) HS Football Field: BHS	

Upcoming Board Items for: May 21, 2026

Project Title	Priority	Cost	Est. Construction Schedule
Muir MS, Replace Main Waterline - Architect Fee	1A	$4,000	Summer 2026
Tech Infrastructure: Phase 1/2	1A	TBD	Summer 2026
Disney Shade Structure – Architect Fee	2	$30,000	Summer 2027
Washington ES – Security Reconfiguration – Architectural Fee	1A	$315,480	2027
Burroughs HS – Turf Replacement @ Football Stadium	1A	TBD	Summer / Fall 2026
ALL APPLICABLE PROJECTS: On-Call Civil Engineering Consultants	1A/1B/2	N/A	N/A

Reminder: Last Bond Program Presentation
Key Needs Identified

In April, staff discussed a focused set of structural improvements necessary to strengthen the Bond Program:

1. **Organizational Alignment**
2. **Program Management Structure**
3. **Fiscal Oversight & Controls**

District Need for Flexible Bond Program Support

Strategic Bond Support to Ensure Oversight, Transparency, and Continuity

- **CBOC & Oversight Requirements**
  - Ongoing support to ensure accurate, timely, and compliant reporting to the Citizens' Bond Oversight Committee
  - Clear alignment with bond language, project lists, and audit expectations
- **Board Reporting & Communication**
  - Consistent, high-quality reporting to the Board that translates complex bond activity into clear, actionable updates
  - Support in developing presentations, dashboards, and narratives tied to progress, budget, and timelines
- **Program Management at a Systems Level**
  - Need for high-level coordination across projects, vendors, and timelines
  - Strategic oversight to ensure projects align with district priorities and available funding across bond series
- **Continuity & Capacity**
  - Gaps in internal staffing or specialized expertise across the life of a multi-year bond program
  - Need for scalable support that can adjust as projects ramp up or wind down
- **Fiscal Responsibility**
  - Avoid long-term, high-cost contracts that may not align with fluctuating needs
  - Prioritize flexible, as-needed support that protects resources while maintaining program integrity

Program Management Services – Services & Integration Model

Owner's Representation & Program Oversight - Acts as an extension of the District to coordinate projects, vendors, and timelines across the bond program

Strategic Planning & Facilities Advisory - Supports prioritization, phasing, and alignment of projects to bond language and district goals

CBOC & Compliance Support - Assists with reporting, documentation, and audit readiness to ensure transparency and Prop 39 compliance

Board Reporting & Communication - Develops clear presentations, dashboards, and updates to support informed decision-making

As-Needed Staffing & Expertise - Provides flexible, on-demand support during peak workload or specialized project needs

Cost-Efficient, Scalable Model - A la carte services that align cost to actual district needs—no long-term, fixed commitment

Position	First Step Salary	Top Step Salary	Total Cost w/ Benefits (30%) – Low	Total Cost w/ Benefits (30%) – High	Measure ABC Funding
Director of Bond Projects	$125,746	$168,505	$163,470	$219,057	100%
Fiscal Compliance Supervisor	$107,014	$143,406	$139,118	$186,428	50%
Position Control Manager	$99,475	$133,304	$129,318	$173,295	50%
		Move .5 FTE of clerical support into Measure ABC		$(50,990.08)	50%
			Max GF Cost	$128,871.43	

Bond Program Reorganization
New Job Descriptions for your Approval

Bond Program Reorganization Org Chart

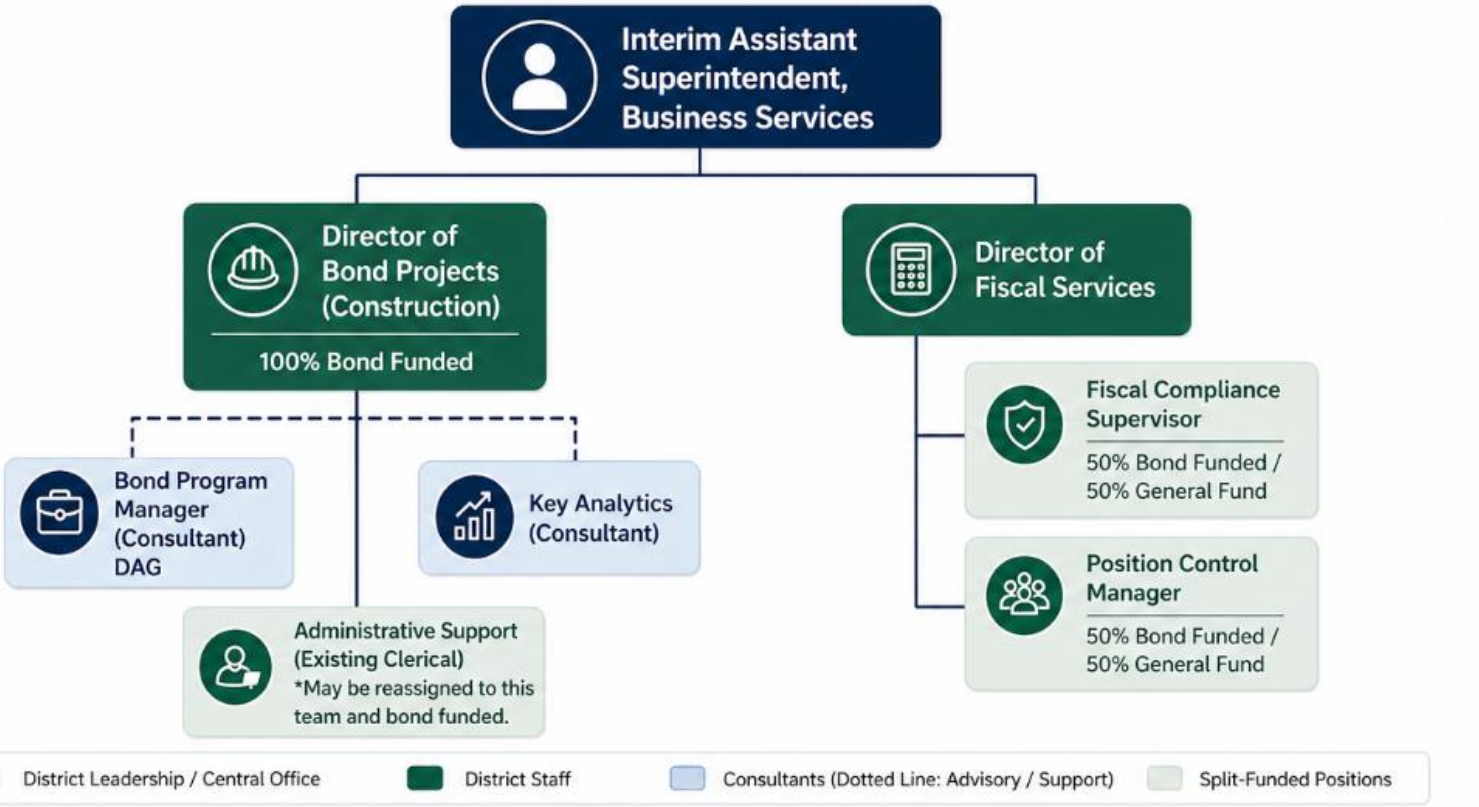

PROGRAM EXECUTION
Director of Bond Projects (100% Bond Funded) leads program oversight, project coordination, vendor management, and execution of all bond-funded projects.

CONSULTANT SUPPORT
Bond Program Manager (DAG) and Key Analytics provide strategic advisory and technical support through a flexible, dotted-line relationship.

FISCAL OVERSIGHT
Director of Fiscal Services supervises compliance, reporting, position control, and alignment of bond and general fund resources.

FUNDING STRUCTURE
Leadership of bond projects is 100% bond funded. Fiscal roles are split-funded 50% Bond / 50% General Fund to ensure compliance and fiscal integrity.

★ **NOTE:** *We may consider placing existing clerical under the Director of Bond Projects and bond fund them as well, reducing General Fund Costs.*

Bond Program Reorganization – Fiscal Impact Summary

Category	Bond Fund Impact	General Fund Impact
Director of Bond Projects (100%)	$219,057	$0
Fiscal Compliance Supervisor (50/50)	$93,214	$93,214
Position Control Manager (50/50)	$86,648	$86,648
Subtotal – Staffing	**$398,919**	**$179,862**

General Fund Offsets

- Repurpose Fiscal Compliance Supervisor (existing GF position): **($93,214)**
- Additional 0.5 FTE GF reduction: **($93,214)**
- Potential clerical shift to bond: **($50,990)**
- ✓ **Net General Fund Impact: ($57,556)** *(Estimated Savings)*

Program Management (Flexible Model)

$250,000 – $1,000,000+ annually: consider a scalable model that tailors services based on project needs

- Bond Program Management Consultant
- Director of Bond Projects: Job Description/Board Approval
- Continue board updates
- Questions??

Next Steps



Thank you!

Questions?

Burbank Unified School District

Instructional Services

REPORT TO THE BOARD

TO:	Members of the Board of Education
FROM:	Peter Knapik, Assistant Superintendent of Educational Services
PREPARED BY:	Peter Knapik, Assistant Superintendent of Educational Services
SUBMITTED BY:	Laura Erisman, Administrative Secretary
DATE:	May 7, 2026
SUBJECT:	Adoption of Resolution 41– Proclaiming May 2026 as the Burbank Unified School District's Asian American and Pacific Islander Heritage Month

---

Background:

Asian American and Pacific Islander (AAPI) Heritage Month, observed in May, originated from a week-long celebration in 1979, but was expanded to a month-long observance in 1990. Congress permanently designated May as AAPI Heritage Month in 1992.

The month's observance is rooted in the arrival of the first Japanese immigrants in the U.S. on May 7, 1843, and the completion of the transcontinental railroad, which was largely built by Chinese laborers, on May 10, 1869.

Discussion/Issues:

The month of May is Asian American and Pacific Islander Heritage Month, where recognition is given to the widespread contributions to the United States by Asian Americans and Pacific Islanders in the areas of music, medicine, science and mathematics, technology, literature, and the arts. From acupuncture to zen, the cultures, philosophies, and technical knowledge of this region have enriched and expanded our lives.

Fiscal Impact:

None

Recommendation:

Peter Knapik, Assistant Superintendent of Educational Services, recommends that the Board of Education adopt Resolution 41 – Proclaiming May 2026 as the Burbank Unified School District's Asian American and Pacific Islander Heritage Month, as presented.

Resolution 41 Proclaiming May 2026
The Burbank Unified School District's Asian American and Pacific Islander Heritage Month

WHEREAS, Asian American and Pacific Islander Heritage Month (AAPI Heritage Month) is an annual celebration that recognizes the historical and cultural contributions of individuals and groups of Asian and Pacific Islander descent to the United States; and

WHEREAS, the Asian American and Pacific Islander community is an inherently diverse population, composed of more than 45 distinct ethnicities and more than 100 language dialects; and

WHEREAS, there are approximately 22,000,000 residents of the United States who identify as Asian and approximately 1,600,000 residents of the United States who identify as Native Hawaiian or other Pacific Islander, making up nearly 7 percent of the total population of the United States; and

WHEREAS, California has the largest Asian American population in the United States, and the second highest proportion of Asian American residents after Hawaii; and

WHEREAS, the month of May was selected for Asian/Pacific American Heritage Month because the first Japanese immigrants arrived in the United States on May 7, 1843, and the first transcontinental railroad was completed on May 10, 1869, with substantial contributions from Chinese immigrants; and

WHEREAS, Asian Americans and Pacific Islanders have played a key role in American history since the first Chinese immigrants arrived to the United States in the 1850s following the California Gold Rush; and

WHEREAS, there are numerous historical Asian Americans and Pacific Islanders contributors to the United States, including activists, actors, architects, athletes, artists, authors, activist, creators, doctors, entrepreneurs, inventors, musicians, performers, political leaders, scientists, singers, writers, and so many more; and

WHEREAS, the Burbank Unified School District celebrates Asian American Pacific Islander Heritage Month and recognizes the significant contributions that Asian Americans and Pacific Islanders offer the community at large; and

NOW, THEREFORE, BE IT RESOLVED, that the Burbank Unified School District Board of Education hereby declare May 2025, as Asian American Pacific Islander Heritage Month in the Burbank Unified School District. We urge all community members to join us in recognizing Asian Americans and Pacific Islanders.

Ayes:
Noes:
Abstain:
Absent:

_____

Clerk, Board of Education


MAY
ASIAN AMERICAN
AND PACIFIC ISLANDER
HERITAGE MONTH

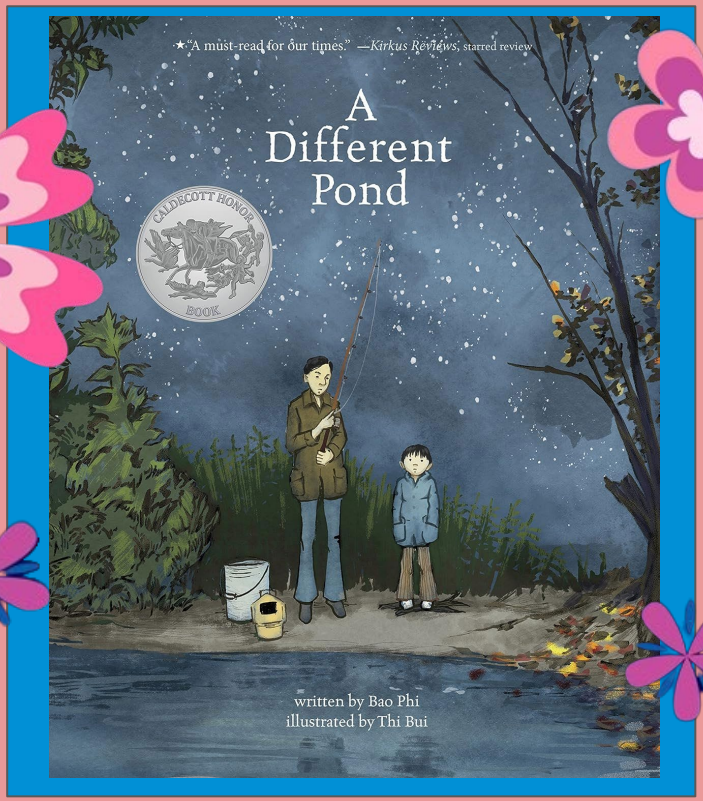
★"A must-read for our times." —*Kirkus Reviews*, starred review
A Different Pond
CALDECOTT HONOR BOOK
written by Bao Phi
illustrated by Thi Bui

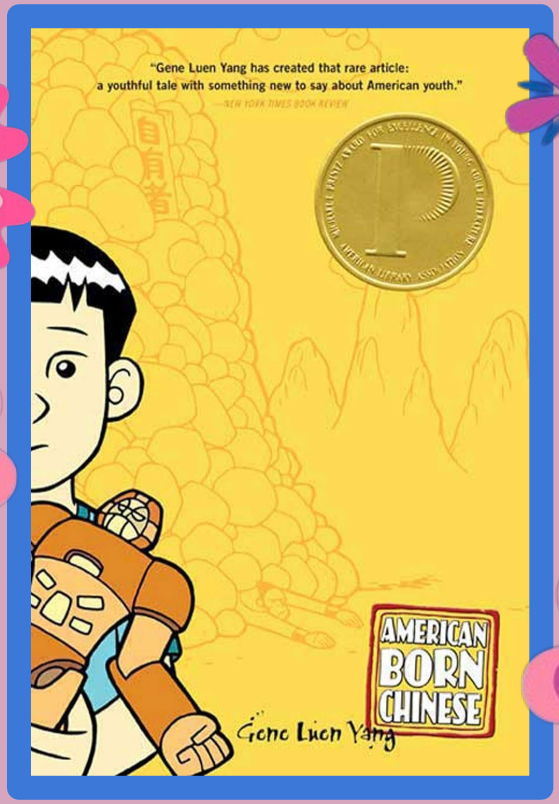
"Gene Luen Yang has created that rare article:
a youthful tale with something new to say about American youth."
—NEW YORK TIMES BOOK REVIEW
AMERICAN
BORN
CHINESE
Gene Luen Yang


LONGLISTED FOR
THE NATIONAL BOOK AWARD
EVERYTHING WE NEVER HAD
YOUTH LITERATURE AWARD WINNER
Asian/Pacific American Librarians Association
Author of PATRON SAINTS OF NOTHING
RANDY RIBAY

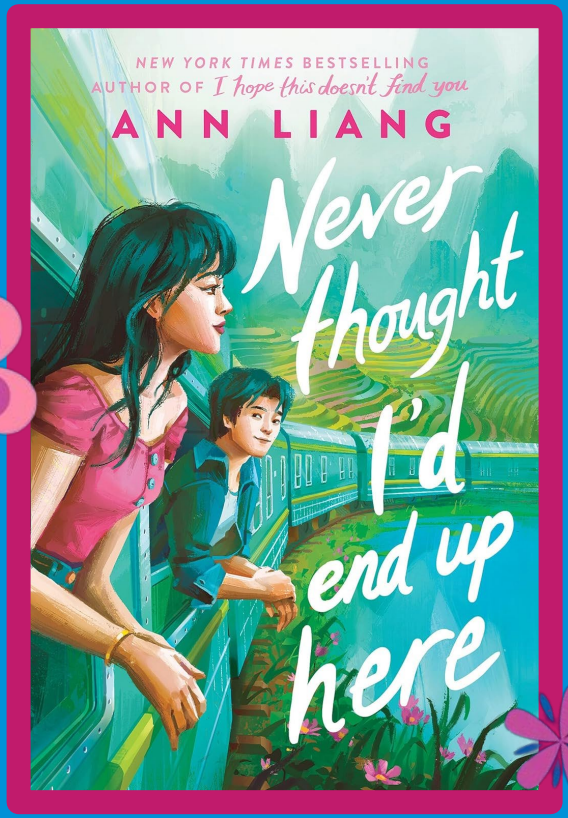
NEW YORK TIMES BESTSELLING
AUTHOR OF I hope this doesn't find you
ANN LIANG
Never thought I'd end up here

Burbank Unified School District
Instructional Services

REPORT TO THE BOARD

TO:	Members of the Board of Education
FROM :	Peter Knapik, Assistant Superintendent of Educational Services
PREPARED BY:	Peter Knapik, Assistant Superintendent of Educational Services
SUBMITTED BY:	Laura Erisman, Administrative Secretary
DATE:	May 7, 2026
SUBJECT:	Adoption of Resolution 42 Proclaiming May 2026 as the Burbank Unified School District's Jewish American Heritage Month

---

Background:

Jewish American Heritage Month is observed nationally each May to recognize and celebrate the rich history, culture, and contributions of Jewish Americans to the United States. Jewish Americans have made significant and lasting contributions across many fields, including education, science, medicine, public service, the arts, and civil rights.

The recognition of Jewish American Heritage Month is an opportunity for the Burbank Unified School District to honor these contributions while promoting cultural awareness, inclusion, and respect within our schools and broader community.

Discussion:

Recognizing Jewish American Heritage Month provides an important opportunity for the District to:

- Highlight the historical and cultural contributions of Jewish Americans;
- Promote awareness and understanding of diverse cultural and religious traditions;
- Reinforce the District's commitment to equity, inclusion, and respect for all students and families;
- Encourage educational activities and conversations that deepen students' understanding of diversity and shared history; and
- Affirm the importance of standing against all forms of discrimination, including antisemitism.

This recognition aligns with the District's commitment to fostering inclusive school environments where all students feel valued, respected, and connected. Honoring Jewish American Heritage Month also supports efforts to build empathy, cultural understanding, and a sense of belonging within the Burbank community.

Fiscal Impact:

There is no fiscal impact associated with the adoption of this resolution.

Recommendation:

Peter Knapik, Assistant Superintendent of Educational Services, recommends that the Board of Education adopt Resolution 42 Proclaiming May 2026 as Burbank Unified School District's Jewish American Heritage Month, as presented.

RESOLUTION 42 PROCLAIMING MAY 2026 AS JEWISH AMERICAN HERITAGE MONTH

WHEREAS, Jewish American Heritage Month is observed nationally each May to celebrate the rich history, enduring traditions, and significant contributions of Jewish Americans to the United States; and

WHEREAS, Jewish Americans have made profound and lasting contributions to the development of our nation in fields including **education, science, medicine, business, arts and entertainment, public service, law, and civic leadership**; and

WHEREAS, Jewish Americans have played a critical role in advancing **civil rights, social justice, and democratic values**, including participation in historic movements that expanded equality and opportunity for all people; and

WHEREAS, Jewish scholars, educators, and innovators have contributed to the advancement of knowledge and learning, influencing generations of students and strengthening the educational foundations of our society; and

WHEREAS, Jewish American artists, writers, musicians, and cultural leaders have significantly shaped American culture, contributing to literature, film, music, and the arts in ways that reflect both heritage and shared national identity; and

WHEREAS, Jewish American service members and public servants have demonstrated a longstanding commitment to the defense, governance, and civic engagement of our nation; and

WHEREAS, the State of California and the Burbank community are strengthened by the cultural diversity and historical contributions of Jewish Americans, whose heritage and traditions continue to enrich our shared community; and

WHEREAS, the Burbank Unified School District is committed to fostering an inclusive and respectful educational environment that values and celebrates the diversity of all students, families, and staff, including the cultural and religious contributions of Jewish Americans; and

WHEREAS, recognizing Jewish American Heritage Month provides an opportunity for students, staff, and the broader community to deepen their understanding of Jewish American history, promote cultural awareness, and foster respect, empathy, and unity; and

WHEREAS, the District affirms its responsibility to stand against all forms of discrimination, including antisemitism, and to promote dignity, equity, and inclusion for all members of the school community;

NOW, THEREFORE, BE IT RESOLVED, that the Burbank Unified School District Board of Education hereby recognizes the month of May 2026 as **Jewish American Heritage Month**; and

BE IT FURTHER RESOLVED, that the Board encourages all schools, educators, students, and community partners to honor this month through **instructional activities, classroom learning, and community engagement** that highlight the history, culture, and contributions of Jewish Americans; and

BE IT FURTHER RESOLVED, that the Board reaffirms its commitment to creating a learning environment that reflects **respect for diversity, inclusion, and the celebration of all cultural identities** within the Burbank Unified School District.

Passed, Approved and Adopted this 7th day of May, 2026 at a meeting of the BurbankUnified School District Board of Education, Los Angeles County, California**.**

Ayes:
Noes:
Abstain:
Absent:

_____
Clerk, Board of Education

Burbank Unified School District
Instructional Services

REPORT TO THE BOARD

TO: Members of the Board of Education

FROM : Peter Knapik, Assistant Superintendent of Educational Services

PREPARED BY: Peter Knapik, Assistant Superintendent of Educational Services

SUBMITTED BY: Laura Erisman, Administrative Secretary

DATE: May 7, 2026

SUBJECT: Adoption of Resolution 43 in Support of Pride Month, June, 2026

Background:
The Burbank Unified School District is committed to creating a safe environment for all students, but has an additional concern for Lesbian, Gay, Bisexual, Transgender, Queer/Questioning, Intersex, and Asexual (LGBTQIA+) students who are most at-risk for feelings of isolation, depression, and suicidal ideations or attempts. This is reflected in the adoption of the Mental Health and Wellness Master Plan in April of 2016.

LGBTQIA+ Pride Month is celebrated each year in June to recognize and commemorate the 1969 Stonewall riots. The riots were protesting a police raid at the Stonewall Inn in Greenwich Village in New York City. It is considered to be the event that launched the movement for LGBTQIA+ rights in the United States. Although there has been some positive change since then, there is still a need to continue the work for acceptance in District schools.

District Wide Goals for 2025-2026

2. Students will be physically emotionally and mentally healthy.

Discussion and Issues:
The District supports Pride Month and would like to highlight its continued support for all LGBTQIA+ students and their families. The District continues to convene teachers regularly for the purpose of reviewing and developing curriculum. In addition, with the approval of the Mental Health and Wellness Plan by the Board of Education in April, 2016, the District will be placing greater efforts in supporting students before they are in crisis.

Fiscal Impact:
There is no fiscal impact.

Recommendation:
Peter Knapik, Assistant Superintendent of Educational Services, recommends that the Board of Education adopt Resolution 43 in Support of Pride Month, June, 2026, as presented.

RESOLUTION 43 PROCLAIMING JUNE, 2026 AS THE BURBANK UNIFIED SCHOOL DISTRICT'S LESBIAN, GAY, BISEXUAL, TRANSGENDER, QUEER/QUESTIONING, INTERSEX, AND ASEXUAL (LGBTQIA+) PRIDE MONTH

WHEREAS, the Burbank Unified School District ("District") models, advocates, actively supports, and promotes the inclusive and respectful treatment of all students, staff, family members, and community members;

WHEREAS, the District believes that all students should be able to attend school in a safe and inclusive environment free from discrimination;

WHEREAS, the District is firmly committed to providing a safe, nurturing, and tolerant environment in our schools;

WHEREAS, the District is firmly committed to school safety for all students, staff, and family members, including the Lesbian, Gay, Bisexual, Transgender, Queer/Questioning, Intersex, and Asexual (LGBTQIA+), community or those that may be perceived as such;

WHEREAS, the District believes that sexual orientation and gender expression-biased bullying are among the most common forms of harassment in schools and the lack of awareness and understanding of these issues have contributed to a higher rate of isolation, depression, and suicidal ideations or attempts;

WHEREAS, the significantly higher rates of school dropout, academic failure and school disengagement among LGBTQIA+ youth across the country are attributed to peer harassment and bullying;

WHEREAS, children who do not conform to gender stereotypes are more likely to be targets of harassment and bullying;

WHEREAS, all District schools must strive to ensure that Burbank schools are consistently safe and affirming spaces for all students, staff and their families;

WHEREAS, pursuant to Education Code section 200, it is the policy of California to afford all persons in public schools, regardless of their disability, gender, gender identity, gender expression, nationality, race or ethnicity, religion, sexual orientation, or any other protected characteristic, equal rights and opportunities in the educational institutions of California;

WHEREAS, pursuant to Education Code section 201, all California's public schools have an affirmative obligation to combat racism, sexism, and other forms of bias, and a responsibility to provide equal educational opportunity;

WHEREAS, pursuant to the Education code section 51933 (California Healthy Youth Act), and Board Policy 6142.1, all California's public schools must provide comprehensive sexual health education to encourage the development of healthy attitudes of adolescent growth and development, body image, gender, sexual orientation, and relationships, and ensure that sexual health education does not promote outdated gender norms;

WHEREAS, the Student Success and Opportunity Act of 2013 strengthened protections for transgender students and affirmed that all students should be recognized and participate in activities by their gender of identity;

WHEREAS, the District endorses training for educators and other school related professionals to support all students dealing with the issues of sexual orientation, gender identity, and gender expression;

WHEREAS, the District recognizes LGBTQIA+ as a protected group and addresses discrimination based upon sexual orientation, gender identity and gender expression;

WHEREAS, the District recognizes that education regarding LGBTQIA+ issues increases understanding and cultivates acceptance of and respect for LGBTQIA+ students;

WHEREAS, the month of June provides an opportunity to celebrate and value the identities and contributions of the LGBTQIA+ community;

WHEREAS, a knowledge of LGBTQIA+ history for all students enables LGBTQIA+ students, families, and educators to be supported by the District community to uphold affirmative lives with dignity and respect;

WHEREAS, by recognizing Pride Month, the District demonstrates support of policies, practices and curriculum that honor and respect LGBTQIA students, staff and their families;

NOW, THEREFORE, BE IT RESOLVED, the Burbank Unified School District Board of Education hereby designates June, 2026 as Pride Month and directs the Superintendent and all District staff to support policies, practices, and curricula that respect LGBTQIA+ students and their families throughout the school year. The District will also fly Pride flags at each site for the month of June.

PASSED, APPROVED, AND ADOPTED this 7th day of May, 2026, at a meeting of the Burbank Unified School District Board of Education, Los Angeles County, California.

Ayes:

Noes:

Abstain:

Absent:

_____

Clerk, Board of Education

Burbank Unified School District
Instructional Services

REPORT TO THE BOARD

TO:	Members of the Board of Education
FROM :	Peter Knapik, Assistant Superintendent of Educational Services
PREPARED BY:	Peter Knapik, Assistant Superintendent of Educational Services
SUBMITTED BY:	Laura Erisman, Administrative Secretary
DATE:	May 7, 2026
SUBJECT:	Adoption of Resolution 44 Proclaiming May 2026 as the Burbank Unified School District's Mental Health Awareness Month

---

Background:

Mental Health Awareness Month is recognized nationwide each May to raise awareness about the importance of mental health and well-being, reduce stigma, and promote access to resources and support services. In the Burbank Unified School District, mental health remains a priority as it directly impacts student learning, engagement, and overall success.

Students, families, and staff continue to face increasing social-emotional challenges, making it essential for schools to provide safe, supportive, and inclusive environments. BUSD continues to implement programs and services that support student wellness, including counseling services, social-emotional learning, trauma-informed practices, and partnerships with community agencies.

District Wide Goals for 2025-2026:

2. Students and Staff will be physically, emotionally and mentally healthy.

Discussion and Issues:

Recognizing Mental Health Awareness Month provides an important opportunity for the District to:

- Promote awareness of mental health as a critical component of student success;
- Reinforce the importance of social-emotional well-being within our schools and community;
- Highlight the efforts of school counselors, psychologists, nurses, teachers, and administrators who support student and staff wellness;
- Encourage open dialogue, reduce stigma, and foster a culture of empathy and support; and
- Strengthen partnerships between schools, families, and community resources to support the well-being of all students.

This recognition aligns with the District's commitment to supporting the whole child and ensuring that every student feels safe, connected, and supported in their educational experience

Fiscal Impact:

None.

Recommendation:

Peter Knapik, Assistant Superintendent of Educational Services, recommends that the Board of Education adopt Resolution 44 Proclaiming May 2026 as Burbank Unified School District's Mental Health Awareness Month, as presented.



RESOLUTION 44 PROCLAIMING MAY 2026 AS MENTAL HEALTH AWARENESS MONTH

WHEREAS, Mental Health Awareness Month is observed nationally each May to raise awareness of the importance of mental health and well-being, reduce stigma, and promote access to resources and support for individuals and families; and

WHEREAS, mental health is a critical component of overall health and wellness, directly impacting students' ability to learn, build relationships, regulate emotions, and achieve success in school and life; and

WHEREAS, within the Burbank Unified School District and the greater Burbank community, students, families, and staff continue to navigate increasing levels of **stress, anxiety, depression, and other mental health challenges**, further underscoring the need for awareness, early intervention, and accessible support systems; and

WHEREAS, schools serve as a central and trusted environment in the community where students can access **social-emotional supports, counseling services, and caring adult relationships** that are essential for their overall well-being; and

WHEREAS, the Burbank community values a **holistic approach to education**, recognizing that academic success is deeply connected to students' emotional health, sense of belonging, and overall wellness; and

WHEREAS, the Burbank Unified School District is committed to promoting **safe, inclusive, and supportive learning environments** through initiatives such as social-emotional learning, Positive Behavioral Interventions and Supports (PBIS), trauma-informed practices, and access to mental health professionals; and

WHEREAS, school counselors, psychologists, social workers, nurses, administrators, and educators across BUSD play a vital role in identifying student needs, providing direct support, and connecting families to community resources; and

WHEREAS, increasing awareness of mental health promotes a culture of **empathy, understanding, and acceptance**, reduces stigma, and encourages individuals to seek help without fear or hesitation; and

WHEREAS, strong partnerships between schools, families, and community organizations are essential to building a **comprehensive system of support** that ensures the well-being of all students and staff in Burbank;

NOW, THEREFORE, BE IT RESOLVED, that the Burbank Unified School District Board of Education hereby recognizes the month of May 2026 as **Mental Health Awareness Month**; and

BE IT FURTHER RESOLVED, that the Board encourages all schools to engage in **meaningful activities, education, and dialogue** that promote mental health awareness, social-emotional well-being, and resiliency among students and staff; and

BE IT FURTHER RESOLVED, that the Board affirms its commitment to expanding and strengthening services and supports that ensure every student in Burbank Unified feels **safe, supported, connected, and valued**; and

BE IT FURTHER RESOLVED, that the Board encourages families and community members to work in partnership with schools to **support mental health, reduce stigma, and foster a culture of care and compassion** across the Burbank community; and

BE IT FURTHER RESOLVED, that the Board reaffirms its ongoing dedication to prioritizing the mental health and well-being of all members of the Burbank Unified School District as an essential part of student success and community strength.

Passed, Approved and Adopted this 7th day of May, 2026 at a meeting of the BurbankUnified School District Board of Education, Los Angeles County, California**.**

Ayes:
Noes:
Abstain:
Absent:

_____
Clerk, Board of Education

BURBANK UNIFIED SCHOOL DISTRICT
Office of Human Resources

REPORT TO THE BOARD

TO:	Members of the Board of Education
FROM :	Peter Knapik, Ed.D., Assistant Superintendent of Educational Services
PREPARED BY:	Jennifer Nicholson, Director of Special Education and Psychological Services
SUBMITTED BY:	Sandra Shearer, Administrative Secretary II
DATE:	May 7, 2026
SUBJECT:	Adoption of Resolution 45 Proclaiming May 18, 2026 as Speech-Language Pathologist Day

Background:

National Speech-Language Pathologist Day is recognized throughout the country as a day to recognize the importance of the skilled and valued work that Speech-Language Pathologists provide to support individuals with communications challenges or delays.

Discussion/Issues:

The Board of Education wishes to adopt the formal resolution that follows, to recognize and show their appreciation for the positive impact that the District's Speech-Language Pathologists have on the lives of this community's students.

The District will observe the recognition of Speech-Language Pathologist Day, May 18, 2026, in accordance with the national date of recognition. The Board of Education would like to thank the Speech-Language Pathologists of the Burbank Unified School District for their dedication and contributions. The resolution will be shared throughout the District to honor its outstanding employees.

Fiscal Impact:

None

Recommendation:

Peter Knapik, Ed.D., Assistant Superintendent of Educational Services, recommends that the Board of Education adopt Resolution 45 proclaiming May 18, 2026 as Speech-Language Pathologist Day, as presented.

RESOLUTION 45 PROCLAIMING MAY 18, 2025 AS NATIONAL SPEECH-LANGUAGE PATHOLOGIST DAY

WHEREAS, May 18th is National Speech-Language Pathologist Day which celebrates the contributions speech language pathologists make to the community; and

WHEREAS, May is Better Hearing and Speech Month established to provide an opportunity to raise awareness about communication disorders and the role of American Speech-Language-Hearing Association members in providing life-altering treatment; and

WHEREAS, Speech-Language Pathologists are experts in communication and are in a highly specialized field focused on the assessment, diagnosis and treatment of communication disorders; and

WHEREAS, there are over 212,000 certified Speech-Language Pathologists in the United States and over half of those work in educational settings; and

WHEREAS, in California, for individuals who receive special education services, approximately 181,000 students are designated as having a Speech or Language Impairment (SLI,) and in the Burbank Unified School District approximately 1,100 students are designated as having a Speech or Language Impairment; and

WHEREAS, 27 Speech-Language Pathologists and 4 Speech-Language Pathology Assistants provide services in the Burbank Unified School District to students ranging from 3-22 years of age in all grades from preschool to transition age; and

WHEREAS, Speech-Language Pathologists provide therapy to students with delays and disorders in the areas of semantics, syntax, morphology, pragmatics, voice, fluency (stuttering), articulation, and phonological processing in order to help them effectively communicate and access the curriculum in the educational setting; and

WHEREAS, Speech-Language Pathologists carry out duties including evaluating communication skills, determining communication delays and disorders, writing comprehensive assessment reports, identifying service and support options, creating and carrying out individualized education programs (IEPs), acting as case managers, providing direct therapy services, collecting progress data, completing progress reports, participating as members of student success teams (SST), assisting with transition planning, consulting with school staff, families and interdisciplinary teams, and supervising student speech-language pathologists in training; and

WHEREAS, California's Speech-Language Pathologists are among the best educated, with high qualification standards and ongoing continuing education requirements, and hold undergraduate and graduate degrees specific to the field of communicative disorders, and are credentialed by the state of California, commonly hold a certificate of clinical competence in speech-language pathology, and generally maintain California state licensure; and

WHEREAS, Speech-Language Pathologists demonstrate a commitment to making a difference in people's lives and are dedicated to continuous learning and empowering others; and

WHEREAS, the Board of Education and leadership of the Burbank Unified School District recognize the vital role of Speech-Language Pathologists and express strong support and gratitude to past and present Speech-Language Pathologists and Speech-Language Pathology Assistants for their commitment and dedication to the students and staff of the Burbank Unified School District,

NOW, THEREFORE, BE IT RESOLVED, that the Board of Education recognize May 18, 2026 as "Speech-Language Pathologist Day" in the Burbank Unified School District.

I HEREBY CERTIFY that Resolution 45 was approved and adopted by the Board of Education of the Burbank Unified School District at a regular meeting held on May 7, 2026.

Ayes:

Noes:

Abstain:

Absent:

_____

Clerk, Board of Education

Burbank Unified School District
Educational Services

REPORT TO THE BOARD

TO:	Members of the Board of Education
FROM:	Peter Knapik, Assistant Superintendent of Educational Services
PREPARED BY:	Narineh Barzegar, Director of Student Services
SUBMITTED BY:	Glenda Diaz Nolasco, Administrative Secretary II
DATE:	May 7, 2026
SUBJECT:	First Reading of Revised Board Policy and Administrative Regulations

Background:

All Board Policies and Administrative Regulations are required to be compliant and current based on State and federal law, program reviews, and for proper program implementation.

Discussion/Issues:

These Board Policies and Administrative Regulations aim to set the expectations for discipline.

The proposed changes in the attachments show the deletions of language that is outdated or no longer needed, such as references to other Board policies following the format upgrades from the California School Board Association.

New language is in bold print.

Board Policy 4358 Employee Security
Administrative Regulation 4358 Employee Security

Board Policy 5131.2 Bullying
Administrative Regulation 5131.2 Bullying

Board Policy 5144 Discipline
Administrative Regulation 5144 Discipline

Board Policy 5144.1 Suspension and Expulsion Due Process
Administrative Regulation 5144.1 Suspension and Expulsion Due Process

Board Policy 5145.2 Freedom of Speech
Administrative Regulation 5145.2 Freedom of Speech

Fiscal Impact:
None

Recommendation:
Peter Knapik, Assistant Superintendent of Educational Services, will facilitate the Board's first reading of the proposed revision to Board Policies and Administrative Regulations, as presented.

Policy 4358: Employee Security Status: ADOPTED

Original Adopted Date: 08/15/2013 | Last Revised Date: 10/07/2021 | Last Reviewed Date: 10/07/2021

The Board of Education desires to provide a safe and orderly work environment for all employees. As part of the district's comprehensive safety plan, the Superintendent or designee shall develop strategies for protecting employees from potentially dangerous persons and situations and for providing necessary assistance and support when emergency situations occur.

Any person who threatens the safety of others at any district facility may be removed by the Superintendent or designee in accordance with AR 3515.2 - Disruptions.

Any employee against whom violence or any threat of violence has been directed in the workplace shall notify the Superintendent or designee immediately. As appropriate, the Superintendent or designee shall initiate legal and security measures to protect the employee and others in the workplace. Such measures may include seeking a temporary restraining order on behalf of the employee pursuant to Code of Civil Procedure 527.8 and/or a gun violence restraining order pursuant to Penal Code 18150 and 18170.

Additionally, a collective bargaining representative may seek a TRO on behalf of a district employee against whom harassment, violence, or credible threat of violence has been directed in the workplace, if the collective bargaining representative serves that employee in employment or labor matters at the employee's workplace. (Code of Civil Procedure 527.8)

Upon request by an employee who is a victim of domestic violence, sexual assault, or stalking, the Superintendent or designee shall provide reasonable accommodations in accordance with ~~Labor Code 230-230.1~~ **Government Code 12945.8** and the accompanying administrative regulation to protect the employee's safety while at work.

The Superintendent or designee may pursue legal action on behalf of an employee against a student or the student's parent/guardian to recover damages for injury to the employee's person or property caused by the student's willful misconduct that occurred on district property, at a school or district activity, or in retaliation for lawful acts of the employee in the performance of the employee's duties. (Education Code 48904, 48905)

The Superintendent or designee shall provide staff development in crisis prevention and intervention techniques, which may include training in classroom management, effective communication techniques, procedures for responding to an active shooter situation, and crisis resolution.

In accordance with law, the Superintendent or designee shall inform teachers, administrators, and/or counselors of crimes and offenses committed by students who may pose a danger in the classroom. (Education Code 48201, 49079; Welfare and Institutions Code 827)

The Superintendent or designee may make available at appropriate locations, including, but not limited to, district and school offices, gyms, and classrooms, communication devices that would enable two-way communication with law enforcement and others when emergencies occur.

Use of Pepper Spray

Employees shall not carry or possess pepper spray on school property or at school activities except when authorized by the Superintendent or designee for self-defense purposes. When allowed, an employee may only possess pepper spray in accordance with administrative regulations and Penal Code 22810. Any employee **authorized to carry or possess pepper spray on school property** who is negligent or careless in the possession or handling of pepper spray shall be subject to appropriate disciplinary measures.

Reporting of Injurious Objects

Employees shall take immediate action upon being made aware that any person is in possession of a weapon or unauthorized injurious object on school grounds or at a school-related or school-sponsored activity. Employees shall exercise their best judgment as to the potential danger involved and shall do one of the following:

1. Confiscate the object and deliver it to the principal immediately
2. Immediately notify the principal, who shall take appropriate action
3. Immediately call 911 and the principal

When informing the principal about the possession or seizure of a weapon or dangerous device, an employee shall report the name(s) of persons involved, witnesses, location, and the circumstances of any seizure.

Regulation 4358: Employee Security Status: ADOPTED

Original Adopted Date: 08/15/2013 | Last Revised Date: 10/07/2021 | Last Reviewed Date: 10/07/2021

An employee may use reasonable and necessary force for self-defense or defense of another person, to quell a disturbance threatening physical injury to others or damage to property, or to obtain possession of weapons or other dangerous objects within the control of a student. (Education Code 44807, 49001)

An employee shall promptly report to the principal or other immediate supervisor any attack, assault, or physical threat made against the employee by a student or by any other individual in relation to the performance of the employee's duties, and any action the employee took in response. Reports of an attack, assault, or threat shall be forwarded immediately to the Superintendent or designee.

In addition, the employee and the principal or other immediate supervisor shall promptly report to local law enforcement authorities an attack, assault, or physical threat made against the employee by a student. (Education Code 44014)

Notice Regarding Student Offenses

When a student commits certain offenses that may endanger staff or others, the following procedures shall be implemented to notify staff members as appropriate:

1. Acts That Are Grounds for Suspension or Expulsion

    a. The Superintendent or designee shall inform the teacher(s) of each student who, during the previous three school years, has engaged in or is reasonably suspected to have engaged in any act, except the possession or use of tobacco products, that would constitute a ground for suspension or expulsion as specified in AR 5144.1 - Suspension and Expulsion/Due Process. This information shall be based upon district records maintained in the ordinary course of business or records received from a law enforcement agency. (Education Code 49079)

    b. Upon receiving a transfer student's record regarding acts committed by the student that resulted in suspension or expulsion, the Superintendent or designee shall inform the student's teacher(s) that the student was suspended from school or expelled from the former district and of the act that resulted in the suspension or expulsion. (Education Code 48201)

    c. Information received by teacher(s) shall be received in confidence for the limited purpose for which it was provided and shall not be further disseminated by the teacher. (Education Code 48201, 49079)

2. Offenses Reported to the District by a Court

    a. When informed by a court that a minor student has been found by the court to have committed any felony or any misdemeanor involving curfew, gambling, alcohol, drugs, tobacco products, carrying of weapons, a sex offense listed in Penal Code 290, assault or battery, larceny, vandalism, or graffiti, the Superintendent or designee shall expeditiously notify the school principal. (Welfare and Institutions Code 827)

    b. The principal shall expeditiously disseminate this information to any counselor who directly supervises or reports on the student's behavior or progress and to any teacher or administrator directly supervising or reporting on the student's behavior or progress whom the principal thinks may need the information in order to work with the student appropriately, avoid being needlessly vulnerable, or protect others from vulnerability. (Welfare and Institutions Code 827)

    c. Any court-initiated information that a teacher, counselor, or administrator receives shall be kept confidential and used only to rehabilitate the student and protect other students and staff. The information shall be further disseminated only when communication with the student, parent/guardian, law enforcement staff, and probation officer is necessary to rehabilitate the student or to protect students and staff. (Welfare and Institutions Code 827)

    d. When a student is removed from school as a result of an offense, the Superintendent shall hold the court's information in a separate confidential file until the student is returned to the district. If the

student is returned to a different district, the Superintendent shall transmit the information provided by the student's parole or probation officer to the superintendent of the new district of attendance. (Welfare and Institutions Code 827)

e. Any confidential file of court-initiated information shall be kept until the student becomes 18, graduates from high school, or is released from juvenile court jurisdiction, whichever occurs first, and shall then be destroyed. (Welfare and Institutions Code 827)

In order to maintain confidentiality when providing information about student offenses to a counselor or teacher, the principal or designee shall send the staff member a written notification that a student has committed an offense that requires review of a student's file in the school office. This notice shall not name or otherwise identify the student. The staff member shall initial the notification and shall also initial the student's file when reviewing it in the school office.

Accommodations for Victims of Domestic Violence, Sexual Assault, or Stalking

When requested by an employee who is a victim of domestic violence, sexual assault, or stalking, the district shall provide the employee reasonable accommodations which may include the implementation of safety measures, including: (Labor Code 230)

1. A transfer, reassignment, or modified schedule
2. A changed work telephone or work station
3. An installed lock
4. Assistance in documenting domestic violence, sexual assault, stalking, or other crime that occurs in the workplace
5. Referral to a victim assistance organization
6. Another safety procedure or adjustment to a job structure, workplace facility, or work requirement in response to domestic violence, sexual assault, stalking, or other crime

The Superintendent or designee shall engage in a timely, good faith, and interactive process with the employee to determine effective reasonable accommodations that do not pose an undue hardship on the district. In determining whether an accommodation is reasonable, the Superintendent or designee shall consider any exigent circumstance or danger facing the employee. (Labor Code 230)

Upon the request of the Superintendent or designee, an employee requesting a reasonable accommodation shall provide a written statement, signed by the employee or an individual acting on the employee's behalf, certifying that the accommodation is for an authorized purpose. The Superintendent or designee may also request that the employee provide certification of the employee's status as a victim of domestic violence, sexual assault, or stalking. Such certification may include: (Labor Code 230)

1. A police report indicating that the employee was a victim
2. A court order protecting or separating the employee from the perpetrator of the crime or abuse, or other evidence from the court or prosecuting attorney that the employee has appeared in court
3. Documentation from a licensed medical professional or health care provider, domestic violence or sexual assault counselor, victim advocate, or counselor that the employee was undergoing treatment or receiving services for physical or mental injuries or abuse resulting in victimization from the crime or abuse
4. Any other form of documentation that reasonably verifies that the crime or abuse occurred, including, but not limited to, a written statement signed by the employee or by an individual acting on the employee's behalf

Any verbal or written statement, police or court record, or other documentation identifying an employee as a victim shall be confidential and shall not be disclosed by the district except as required by federal or state law or as necessary to protect the employee's safety in the workplace. The employee shall be notified before any authorized disclosure. (Labor Code 230)

Every six months after the date of the certification, the Superintendent or designee may request recertification of the employee's status as a victim of domestic violence, sexual assault, or stalking or ongoing circumstances related to the crime or abuse. The employee shall notify the Superintendent or designee if, due to changing circumstances, the employee needs a new accommodation or no longer needs an accommodation. (Labor Code 230)

The district shall not retaliate against an employee because of the employee's status as a victim of crime or abuse or for requesting a reasonable accommodation, regardless of whether the request was granted. (Labor Code 230)

Use of Pepper Spray

The Superintendent or designee shall notify employees of the district's policy prohibiting the possession of pepper spray on school property or at school-related activities without prior approval of the Superintendent or designee. Employees wishing to carry pepper spray shall submit to the Superintendent or designee a written request setting forth the need for the pepper spray. The Superintendent or designee shall notify the employee in writing as to whether the request was approved or denied.

When approving an employee's request, the Superintendent or designee shall inform the employee of the following conditions:

1. The pepper spray shall be used only in self-defense pursuant to Penal Code 22810.

2. An employee who uses pepper spray other than in self-defense shall be subject to disciplinary action by the district and, in accordance with law, a fine and/or imprisonment.

3. The pepper spray must be stored in a secure place and not be accessible to students or other individuals. Negligent storage of the pepper spray may subject the employee to disciplinary action.

Policy 5131.2: Bullying

Status: ADOPTED

Original Adopted Date: 03/07/2013 | Last Revised Date: 05/07/2020 | Last Reviewed Date: 05/07/2020

This policy shall apply to all acts constituting bullying related to school activity or to school attendance occurring within a district school, to acts which occur off campus or outside of school-related or school-sponsored activities but which may have an impact or create a hostile environment at school, and to all acts of the Governing Board and the Superintendent in enacting policies and procedures that govern the district.

The Board of Education recognizes the harmful effects of bullying on student well-being, student learning, and school attendance and desires to provide a safe school environment that protects students from physical and emotional harm. No individual or group shall, through physical, written, verbal, visual, or other means, harass, sexually harass, threaten, intimidate, cyberbully, cause bodily injury to, or commit hate violence against any student or school personnel, or retaliate against them for filing a complaint or participating in the complaint resolution process.

The Superintendent or designee shall develop strategies for addressing bullying in district schools with the involvement of students, parents/guardians, and staff. As appropriate, the Superintendent or designee may also collaborate with social services, mental health services, law enforcement, courts, and other agencies and community organizations in the development and implementation of effective strategies to promote safety in schools and the community.

Such strategies shall be incorporated into the comprehensive safety plan and, to the extent possible, into the local control and accountability plan and other applicable district and school plans.

Any complaint of bullying shall be investigated and, if determined to be discriminatory, resolved in accordance with law and the district's uniform complaint procedures specified in AR 1312.3. If, during the investigation, it is determined that a complaint is about nondiscriminatory bullying, the principal or designee shall inform the complainant and shall take all necessary actions to resolve the complaint.

If the Superintendent or designee believes it is in the best interest of a student who has been the victim of an act of bullying, as defined in Education Code 48900, the Superintendent or designee shall advise the student's parents/guardians that the student may transfer to another school. If the parents/guardians of a student who has been the victim of an act of bullying requests a transfer for the student pursuant to Education Code 46600, the Superintendent or designee shall allow the transfer in accordance with law and district policy on intradistrict or interdistrict transfer, as applicable.

District families are encouraged to model respectful behavior, contribute to a safe and supportive learning environment, and monitor potential causes of bullying.

Any employee who permits or engages in bullying or retaliation related to bullying shall be subject to disciplinary action, up to and including dismissal.

Regulation 5131.2: Bullying Status: ADOPTED

Original Adopted Date: 05/07/2020 | Last Reviewed Date: 05/07/2020

Examples of Prohibited Conduct

Bullying is an aggressive behavior that involves a real or perceived imbalance of power between individuals with the intent to cause emotional or physical harm. Bullying can be physical, verbal, or social/relational and may involve a single severe act or repetition or potential repetition of a deliberate act. Bullying includes, but is not limited to, any act described in Education Code 48900(r).

Cyberbullying includes the electronic creation or transmission of harassing communications, direct threats, or other harmful texts, sounds, or images **which may be shared, sent, or posted publicly**. **Cyberbullying may include, but is not limited to, personal or private information that causes humiliation, false or negative information to discredit or disparage, or threats of physical harm.** Cyberbullying also includes breaking into another person's electronic account or assuming that person's online identity in order to damage that person's reputation.

Examples of the types of conduct that may constitute bullying and are prohibited by the district include, but are not limited to:

1. Physical bullying: An act that inflicts harm upon a person's body or possessions, such as hitting, kicking, pinching, spitting, tripping, pushing, taking or breaking someone's possessions, or making cruel or rude hand gestures

2. Verbal bullying: An act that includes saying or writing hurtful things, such as teasing, name-calling, inappropriate sexual comments, taunting, or threats to cause harm

3. Social/relational bullying: An act that harms a person's reputation or relationships, such as leaving a person out of an activity on purpose, influencing others not to be friends with someone, spreading rumors, or embarrassing someone in public

4. Cyberbullying: An act **that occurs on electronic devices such as computers, tablets, or cell phones, act** such as sending demeaning or hateful text messages or emails, **direct messages or public posts on social media apps, gaming forums, or emails,** spreading rumors by email or by posting on social networking sites, **shaming or humiliating by allowing others to view, participate in, or share disparaging or harmful content,** or posting or sharing embarrassing photos, videos, web site, or fake profiles

Measures to Prevent Bullying

The Superintendent or designee shall implement measures to prevent bullying in district schools, including, but not limited to, the following:

1. **Developing a strategic plan for school connectedness and social skills with benchmark tracking, which may include providing regular opportunities and spaces for students to develop social skills and strengthen relationships and promoting adult support from family and school staff, peer-led programs, and partnerships with key community groups, implementing socially based educational techniques such as cooperative learning projects that can improve educational outcomes as well as peer relations, creating a supportive school environment that fosters belonging through equitable classroom management, mentoring, and peer support groups that allow students to lean on each other and learn from each other's experiences, and building social connection into health education courses including information on the consequences of social connection on physical and mental health, key risk and protective factors, and strategies for increasing social connection**

2. Ensuring that each school establishes clear rules for student conduct and implements strategies to promote a positive, collaborative school climate

3. Providing information to students, through student handbooks, district and school web sites and social media, and other age-appropriate means, about district and school rules related to bullying, mechanisms available for reporting incidents or threats, and the consequences for engaging in bullying

4. Encouraging students to notify school staff when they are being bullied or when they suspect that another student is being bullied, and providing means by which students may report threats or incidents confidentially and anonymously

5. Conducting an assessment of bullying incidents at each school and, if necessary, increasing supervision and security in areas where bullying most often occurs, such as playgrounds, hallways, restrooms, and cafeterias

6. Annually notifying district employees that, pursuant to Education Code 234.1, any school staff who witnesses an act of bullying against a student has a responsibility to immediately intervene to stop the incident when it is safe to do so

Staff Development

The Superintendent or designee shall annually make available to all certificated staff and to other employees who have regular interaction with students the California Department of Education (CDE) online training module on the dynamics of bullying and cyberbullying, including the identification of bullying and cyberbullying and the implementation of strategies to address bullying. (Education Code 32283.5)

The Superintendent or designee shall provide training to teachers and other school staff to raise their awareness about the legal obligation of the district and its employees to prevent discrimination, harassment, intimidation, and bullying of district students. Such training shall be designed to provide staff with the skills to:

1. Discuss the diversity of the student body and school community, including their varying immigration experiences

2. Discuss bullying prevention strategies with students, and teach students to recognize the behavior and characteristics of bullying perpetrators and victims

3. Identify the signs of bullying or harassing behavior

4. Take immediate corrective action when bullying is observed

5. Report incidents to the appropriate authorities, including law enforcement in instances of criminal behavior

Information and Resources

The Superintendent or designee shall post on the district's web site, in a prominent location and in a manner that is easily accessible to students and parents/guardians, information on bullying and harassment prevention which includes the following: (Education Code 234.6)

1. The district's policy on student suicide prevention, including a reference to the policy's age appropriateness for students in grades K-6

2. The definition of sex discrimination and harassment as described in Education Code 230, including the rights set forth in Education Code 221.8

3. Title IX information included on the district's web site pursuant to Education Code 221.61, and a link to the Title IX information included on CDE's web site pursuant to Education Code 221.6

4. District policies on student sexual harassment, prevention and response to hate violence, discrimination, harassment, intimidation, bullying, and cyberbullying

5. A section on social media bullying that includes all of the references described in Education Code 234.6 as possible forums for social media

6. A link to statewide resources, including community-based organizations, compiled by CDE pursuant to Education Code 234.5.

7. Any additional information the Superintendent or designee deems important for preventing bullying and harassment

Student Instruction

As appropriate, the district shall provide students with instruction, in the classroom or other educational settings, that promotes social-emotional learning, effective communication and conflict resolution skills, character development, respect for cultural and individual differences, self-esteem development, assertiveness skills, and appropriate online behavior.

The district shall also educate students about the negative impact of bullying, discrimination, intimidation, and harassment based on actual or perceived immigration status, religious beliefs and customs, or any other individual bias or prejudice.

Students should be taught the difference between appropriate and inappropriate behaviors, how to advocate for themselves, how to help another student who is being bullied, and when to seek assistance from a trusted adult. As role models for students, staff shall be expected to demonstrate effective problem-solving and anger management skills.

To discourage cyberbullying, teachers may advise students to be cautious about sharing passwords, personal data, or private photos online and to consider the consequences of making negative comments about others online.

Reporting and Filing of Complaints

Any student, parent/guardian, or other individual who believes that a student has been subjected to bullying or who has witnessed bullying may report the incident to a teacher, the principal, a compliance officer, or any other available school employee.

When a report of bullying is submitted, the principal or a district compliance officer shall inform the student or parent/guardian of the right to file a formal written complaint in accordance with AR 1312.3 - Uniform Complaint Procedures. The student who is the alleged victim of the bullying shall be given an opportunity to describe the incident, identify witnesses who may have relevant information, and provide other evidence of bullying.

Within one business day of receiving such a report, a staff member shall notify the principal of the report, whether or not a uniform complaint is filed. In addition, any school employee who observes an incident of bullying involving a student shall, within one business day, report such observation to the principal or a district compliance officer, whether or not the alleged victim files a complaint.

Within two business days of receiving a report of bullying, the principal shall notify the district compliance officer identified in AR 1312.3.

When the circumstances involve cyberbullying, individuals with information about the activity shall be encouraged to save and print any electronic or digital messages that they feel constitute cyberbullying and to notify a teacher, the principal, or other employee so that the matter may be investigated. When a student uses a social networking site or service to bully or harass another student, the Superintendent or designee may file a request with the networking site or service to suspend the privileges of the student and to have the material removed.

Discipline/Corrective Actions

Corrective actions for a student who commits an act of bullying of any type may include counseling, behavioral intervention and education, and, if the behavior is severe or pervasive as defined in Education Code 48900, may include suspension or expulsion in accordance with district policies and regulations.

When appropriate based on the severity or pervasiveness of the bullying, the Superintendent or designee shall notify the parents/guardians of victims and perpetrators and may contact law enforcement.

Support Services

The Superintendent, principal, or principal's designee may refer a victim, witness, perpetrator, or other student affected by an act of bullying to a school counselor, school psychologist, social worker, child welfare attendance personnel, school nurse, or other school support service personnel for case management, counseling, and/or participation in a restorative justice program as appropriate. (Education Code 48900.9)

If any student involved in bullying exhibits warning signs of suicidal thought or intention or of intent to harm another person, the Superintendent or designee shall, as appropriate, implement district intervention protocols which may include, but are not limited to, referral to district or community mental health services, other health professionals, and/or law enforcement.

Policy 5144: Discipline

Status: ADOPTED

Original Adopted Date: 04/04/2019 | Last Reviewed Date: 04/04/2019

The Board of Education is committed to providing a safe, supportive, and positive school environment which is conducive to student learning and achievement and desires to prepare students for responsible citizenship by fostering self-discipline and personal responsibility. The Board believes that high expectations for student behavior, use of effective school and classroom management strategies, provision of appropriate intervention and support, and parent/guardian involvement can minimize the need for disciplinary measures that exclude students from instruction as a means for correcting student misbehavior.

The Superintendent or designee shall develop effective, age-appropriate strategies for maintaining a positive school climate and correcting student misbehavior at district schools. The strategies shall focus on providing students with needed supports; communicating clear, appropriate, and consistent expectations and consequences for student conduct; and ensuring equity and continuous improvement in the implementation of district discipline policies and practices.

In addition, the Superintendent or designee's strategies for correcting student misconduct shall reflect the Board's preference for the use of positive interventions and alternative disciplinary measures over exclusionary discipline measures.

Disciplinary measures that may result in loss of instructional time or cause students to be disengaged from school, such as detention, suspension, and expulsion, shall be imposed only when required or permitted by law or when other means of correction have been documented to have failed. (Education Code 48900.5)

School personnel and volunteers shall not allow any disciplinary action taken against a student to result in the denial or delay of a school meal. (Education Code 49557.5)

A student shall not be denied recess unless the student's participation poses an immediate threat to the physical safety of the student or to the physical safety of one or more of the student's peers. If, due to such immediate threat, a student is denied recess, staff shall make all reasonable efforts to resolve the threat and minimize the student's exclusion from recess, to the greatest extent practicable. (Education Code 49056)

Seclusion and behavioral restraint are prohibited as a means of discipline and shall not be used to correct student behavior except as permitted pursuant to Education Code 49005.4 and in accordance with district regulations. (Education Code 49005.2)

The Superintendent or designee shall create a model discipline matrix that lists violations and the consequences for each as allowed by law.

The ~~administrative staff~~ **principal or designee** at each school may develop disciplinary rules to meet the school's particular needs consistent with law, Board policy, and district regulations. The Board, at an open meeting, shall review the approved school discipline rules for consistency with Board policy and state law. Site-level disciplinary rules shall be included in the district's comprehensive safety plan. (Education Code 32282, 35291.5)

At all times, the safety of students and staff and the maintenance of an orderly school environment shall be priorities in determining appropriate discipline. When misconduct occurs, staff shall attempt to identify the causes of the student's behavior and implement appropriate discipline. When choosing between different disciplinary strategies,

staff shall consider the effect of each option on the student's health, well-being, and opportunity to learn.

Staff shall enforce disciplinary rules fairly, consistently, and in accordance with the district's nondiscrimination policies.

The Superintendent or designee shall provide professional development as necessary to assist staff in developing the skills needed to effectively and equitably implement the disciplinary strategies adopted for district schools, including, but not limited to, knowledge of school and classroom management skills and their consistent application, effective accountability and positive intervention techniques, and the tools to form strong, cooperative relationships with parents/guardians.

District goals for improving school climate, based on suspension and expulsion rates, surveys of students, staff, and parents/guardians regarding their sense of school safety and connectedness to the school community, and other local measures, shall be included in the district's local control and accountability plan, as required by law.
At the beginning of each school year, the Superintendent or designee shall report to the Board regarding disciplinary strategies used in district schools in the immediately preceding school year and their effect on student learning.

At the beginning of each school year, the Superintendent or designee may report to the Board regarding disciplinary strategies used in district schools in the immediately preceding school year and their effect on student learning.

Regulation 5144: Discipline Status: ADOPTED

Original Adopted Date: 04/04/2019 | Last Reviewed Date: 04/04/2019

Site-Level Rules
Site-level rules shall be consistent with State law and Board policies and administrative regulations. In developing site-level disciplinary rules, the principal or designee shall solicit the participation, views, and advice of one representative selected by each of the following groups: (Education Code 35291.5)

1. Parents/guardians
2. Teachers
3. School administrators
4. School security personnel, if any
5. For ~~junior high~~ **middle** and high schools, students enrolled in the school

Annually, site-level discipline rules shall be reviewed and, if necessary, updated to align with any changes in State law, district discipline policies and regulations, and/or goals for school safety and climate as specified in the district's local control and accountability plan. A copy of the rules shall be filed with the Superintendent or designee for inclusion in the comprehensive safety plan.

School rules shall be communicated to students clearly and in an age-appropriate manner.

It shall be the duty of each employee of the school to enforce the school rules on student discipline. (Education Code 35291.5)

Disciplinary Strategies

To the extent possible, staff shall use disciplinary strategies that keep students in school and participating in the instructional program. Except when students' presence causes a danger to themselves or others or they commit a single act of a grave nature or an offense for which suspension or expulsion is required by law, suspension or expulsion shall be used only when other means of correction have failed to bring about proper conduct. Disciplinary strategies may include, but are not limited to:

1. Discussion or conference between school staff and the student and parents/guardians
2. Referral of the student to the school counselor or other school support service personnel for case management and counseling
3. Convening of a study team, guidance team, resource panel, or other intervention-related team to assess the behavior and develop and implement an individual plan to address the behavior in partnership with the student and parents/guardians
4. When applicable, referral for a comprehensive psychosocial or psychoeducational assessment, including for purposes of creating an individualized education program or a Section 504 plan
5. Enrollment in a program for teaching prosocial behavior or anger management
6. Participation in a restorative justice program
7. A positive behavior support approach with tiered interventions that occur during the school day on campus
8. Participation in a social and emotional learning program that teaches students the ability to understand and manage emotions, develop caring and concern for others, make responsible decisions, establish positive relationships, and handle challenging situations capably

9. Participation in a program that is sensitive to the traumas experienced by students, focuses on students' behavioral health needs, and addresses those needs in a proactive manner

10. After-school programs that address specific behavioral issues or expose students to positive activities and behaviors, including, but not limited to, those operated in collaboration with local parent and community groups

11. Recess restriction as provided in the section below entitled "Recess Restriction"

12. Detention after school hours as provided in the section below entitled "Detention After School"

13. Community service as provided in the section below entitled "Community Service"

14. In accordance with Board policy and administrative regulation, restriction or disqualification from participation in extracurricular activities

15. Reassignment to an alternative educational environment

16. Suspension and expulsion in accordance with law, Board policy, and administrative regulation

When, by law or district policy, other means of correction are required to be implemented before a student could be suspended or expelled, any other means of correction implemented shall be documented and retained in the student's records. (Education Code 48900.5)

When a student has been suspended, or other means of correction have been implemented against the student, for an incident of racist bullying, harassment, or intimidation, the principal or designee shall engage both the victim and perpetrator in a restorative justice practice suitable to the needs of the students. The principal or designee shall also require the perpetrator to engage in a culturally sensitive program that promotes racial justice and equity and combats racism and ignorance and shall regularly check on the victim to ensure that the victim is not in danger of suffering from any long-lasting mental health issues. (Education Code 48900.5)

Staff shall enforce disciplinary rules fairly, consistently, and in accordance with the district's nondiscrimination policies.

When disciplining a student who has been identified for special education and related services, the procedures specified in Administrative Regulation 5144.2 - Suspension And Expulsion/Due Process (Students With Disabilities) shall be applied. If a student has not been identified as a student with a disability and the district suspects the behavior that resulted in discipline may be based in an unidentified disability, the district shall conduct an evaluation to determine if the student has a disability which requires an IEP or 504 plan. (U.S.C. 1412(a)(3))

Recess Restriction

Teachers may restrict a student's recess time only when they believe that this action is the most effective way to bring about improved behavior. When recess restriction involves the withholding of physical activity from a student, teachers shall try other disciplinary measures before imposing the restriction. Recess restriction shall be subject to the following conditions:

1. The student shall be given adequate time to use the restroom and get a drink or eat lunch, as appropriate.

2. The student shall remain under a certificated employee's supervision during the period of restriction.

3. The student's teacher shall inform the principal of any recess restrictions imposed.

Detention After School

Students may be detained for disciplinary reasons for up to one hour after the close of the maximum school day, or until the departure of the school bus to which they have been assigned if applicable. (5 CCR 307, 353)

The student shall not be detained unless the principal or designee notifies the parent/guardian.

Students shall remain under the supervision of a certificated employee during the period of detention.

Students may be offered the choice of serving their detention on Saturday rather than after school.

Community Service
As part of or instead of disciplinary action, the Board, Superintendent, principal, or principal's designee may require a student to perform community service during non-school hours on school grounds or, with written permission of the student's parent/guardian, off school grounds. Such service may include, but is not limited to, community or school outdoor beautification, community or campus betterment, and teacher, peer, or youth assistance programs. (Education Code 48900.6)
This community service option is not available for a student who has been suspended, pending expulsion, pursuant to Education Code 48915. However, if the recommended expulsion is not implemented or the expulsion itself is suspended, then the student may be required to perform community service for the resulting suspension. (Education Code 48900.6)

Notice to Parents/Guardians and Students
At the beginning of the school year, the Superintendent or designee shall notify parents/guardians, in writing, about the availability of district rules related to discipline. (Education Code 35291, 48980)

The Superintendent or designee shall also provide written notice of disciplinary rules to transfer students at the time of their enrollment in the district.

Policy 5144.1: Suspension And Expulsion/Due Process Status: ADOPTED

Original Adopted Date: 12/20/2018 | Last Revised Date: 06/18/2020 | Last Reviewed Date: 06/18/2020

The Board of Education desires to provide district students access to educational opportunities in an orderly school environment that protects their safety and security, ensures their welfare and well-being, and promotes their learning and development. The Board shall develop rules and regulations setting the standards of behavior expected of district students and the disciplinary processes and procedures for addressing violations of those standards, including suspension and/or expulsion.

The grounds for suspension and expulsion and the procedures for considering, recommending, and/or implementing suspension and expulsion shall be only those specified in law, in this policy, and in the accompanying administrative regulation.

Except when otherwise permitted by law, a student may be suspended or expelled only when the behavior is related to a school activity or school attendance occurring within any district school or another school district, regardless of when it occurs, including, but not limited to, the following: (Education Code 48900(s))

1. While on school grounds
2. While going to or coming from school
3. During the lunch period, whether on or off the school campus
4. During, going to, or coming from a school-sponsored activity

District staff shall enforce the rules concerning suspension and expulsion of students fairly, consistently, equally, and in accordance with the district's nondiscrimination policies.

Appropriate Use of Suspension Authority

Except when a student's act violates Education Code 48900(a)-(e), as listed in items #1-5 under "Grounds for Suspension and Expulsion: Grades K-12" of the accompanying administrative regulation, or when the student's presence causes a danger to others, suspension shall be used only when other means of correction have failed to bring about proper conduct. (Education Code 48900.5, 48900.6)

A student's parents/guardians shall be notified as soon as possible when there is an escalating pattern of misbehavior that could lead to on-campus or off-campus suspension.

No student in grades K-8 may be suspended for disruption or willful defiance, except by a teacher pursuant to Education Code 48910. (Education Code 48900)

Students shall not be suspended or expelled for truancy, tardiness, or absenteeism from assigned school activities. **(Education Code 48900)**

On-Campus Suspension

To ensure the proper supervision and ongoing learning of students who are suspended for any of the reasons enumerated in Education Code 48900 and 48900.2, but who pose no imminent danger or threat to anyone at school and for whom expulsion proceedings have not been initiated, the Superintendent or designee shall establish a supervised suspension classroom program which meets the requirements of law.

Except where a supervised suspension is permitted by law for a student's first offense, supervised suspension shall be imposed only when other means of correction have failed to bring about proper conduct. (Education Code 48900.5)

Authority to Expel

A student may be expelled only by the Board. (Education Code 48918(j))

As required by law, the Superintendent or principal shall recommend expulsion and the Board shall expel any student

found to have committed any of the following "mandatory recommendation and mandatory expulsion" acts at school or at a school activity off school grounds: (Education Code 48915)

1. Possessing a firearm which is not an imitation firearm, as verified by a certificated employee, unless the student had obtained prior written permission to possess the item from a certificated school employee, with the principal or designee's concurrence

2. Selling or otherwise furnishing a firearm

3. Brandishing a knife at another person

4. Unlawfully selling a controlled substance listed in Health and Safety Code 11053-11058

5. Committing or attempting to commit a sexual assault as defined in Penal Code 261, 266c, 286, 288, 288a, or 289, or committing a sexual battery as defined in Penal Code 243.4

6. Possessing an explosive as defined in 18 USC 921

For all other violations listed in the accompanying administrative regulation, the Superintendent or principal shall have the discretion to recommend expulsion of a student. If expulsion is recommended, the Board shall order the student expelled only if it makes a finding of either or both of the following: (Education Code 48915(b) and (e))

1. That other means of correction are not feasible or have repeatedly failed to bring about proper conduct

2. That due to the nature of the violation, the presence of the student causes a continuing danger to the physical safety of the student or others

On a case-by-case basis, a student Board member(s) may make restorative justice recommendations to the Board regarding specific expulsion matters, in accordance with Board Bylaw 9150 - Student Board Members.

A vote to expel a student shall be taken in an open session of a Board meeting. **(Education Code 48918(j))**

The Board may vote to suspend the enforcement of the expulsion order pursuant to the requirements of law and the accompanying administrative regulation. (Education Code 48917)

No student shall be expelled for disruption or willful defiance. (Education Code 48900)

No child enrolled in a preschool program shall be expelled except under limited circumstances **in accordance with Education Code 8489.1 and** as specified in AR 5148.3 - Preschool/Early Childhood Education.

Due Process

The Board shall provide for the fair and equitable treatment of students facing suspension and/or expulsion by affording them their due process rights under the law. The Superintendent or designee shall comply with procedures for notices, hearings, and appeals as specified in law and administrative regulation. (Education Code 48911, 48915, 48915.5, 48918)

Maintenance and Monitoring of Outcome Data

The Superintendent or designee shall maintain outcome data related to student suspensions and expulsions in accordance with Education Code 48900.8 and 48916.1, including, but not limited to,

1. the number of students recommended for expulsion,

2. the grounds for each recommended expulsion,

3. the actions taken by the Board, **including whether the student was subsequently expelled and whether the expulsion order was suspended,**

4. the types of referral made after each expulsion,

5. the disposition of the students after the expulsion period**, including the completion of a rehabilitation plan or the successful readmission of the student, or both,**

6. **the average length of expulsion terms, including any extensions**

For any expulsion that involves the possession of a firearm, such data shall include the name of the school and the type of firearm involved, as required pursuant to 20 USC 7961. Suspension and expulsion data shall be reported to the Board annually and to the California Department of Education when so required.

In presenting the report to the Board, the Superintendent or designee shall disaggregate data on suspensions and expulsions by school and by numerically significant student subgroups, including, but not limited to, ethnic subgroups, socioeconomically disadvantaged students, English learners, **long-term English learners,** students with disabilities, foster youth, and homeless students **experiencing homelessness**. Based on the data, the Board shall address any identified disparities in the imposition of student discipline and shall determine whether and how the district is meeting its goals for improving school climate as specified in its local control and accountability plan**, which may include monitoring intervention effectiveness.**

Regulation 5144.1: Suspension And Expulsion/Due Process Status: ADOPTED

Original Adopted Date: 12/20/2018 | Last Revised Date: 06/18/2020 | Last Reviewed Date: 06/18/2020

Definitions

Suspension means removal of a student from ongoing instruction for adjustment purposes. However, suspension does not mean any of the following: (Education Code 48925)

1. Reassignment to another education program or class at the same school where the student will receive continuing instruction for the length of day prescribed by the Board of Education for students of the same grade level

2. Referral to a certificated employee designated by the principal to advise students

3. Removal from the class, but without reassignment to another class or program, for the remainder of the class period without sending the student to the principal or designee as provided in Education Code 48910**, so long as removal from a particular class does not occur more than once every five school days**

Expulsion means removal of a student from the immediate supervision and control or the general supervision of school personnel. (Education Code 48925)

Notice of Regulations

At the beginning of each school year, the principal of each school shall ensure that all students and parents/guardians are notified in writing of all school rules related to discipline, including suspension and expulsion. (Education Code 35291, 48900.1, 48980)

Grounds for Suspension and Expulsion: Grades K-12

Acts for which a student, including a student with disabilities, may be suspended or expelled shall be only those specified as follows and in the sections "Additional Grounds for Suspension and Expulsion: Grades 4-12" and "Additional Grounds for Suspension and Expulsion: Grades 9-12" below:

1. Caused, attempted to cause, or threatened to cause physical injury to another person; willfully used force or violence upon another person, except in self-defense; or committed as an aider or abettor, as adjudged by a juvenile court, a crime of physical violence in which the victim suffered great or serious bodily injury (Education Code 48900(a) and (t))

2. Possessed, sold, or otherwise furnished any firearm, knife, explosive, or other dangerous object, unless, in the case of possession of any object of this type, the student had obtained written permission to possess the item from a certificated school employee, with the principal or designee's concurrence (Education Code 48900(b))

3. Unlawfully possessed, used, sold, otherwise furnished, or was under the influence of any controlled substance as defined in Health and Safety Code 11053-11058, alcoholic beverage, or intoxicant of any kind (Education Code 48900(c))

4. Unlawfully offered, arranged, or negotiated to sell any controlled substance as defined in Health and Safety Code 11053-11058, alcoholic beverage, or intoxicant of any kind, and then sold, delivered, or otherwise furnished to any person another liquid, substance, or material and represented same as such controlled substance, alcoholic beverage, or intoxicant (Education Code 48900(d))

5. Committed or attempted to commit robbery or extortion (Education Code 48900(e))

6. Caused or attempted to cause damage to school property or private property (Education Code 48900(f))

7. Stole or attempted to steal school property or private property (Education Code 48900(g))

8. Possessed or used tobacco or products containing tobacco or nicotine products, including, but not limited to, cigars, cigarettes, miniature cigars, clove cigarettes, smokeless tobacco, snuff, chew packets, and betel, except that this restriction shall not prohibit a student from using or possessing prescription products (Education Code 48900(h))

9. Committed an obscene act or engaged in habitual profanity or vulgarity (Education Code 48900(i))

10. Unlawfully possessed, offered, arranged, or negotiated to sell any drug paraphernalia, as defined in Health and Safety Code 11014.5 (Education Code 48900(j))

11. Knowingly received stolen school property or private property (Education Code 48900(l))

12. Possessed an imitation firearm (Education Code 48900(m))

    Imitation firearm means a replica of a firearm that is so substantially similar in physical properties to an existing firearm as to lead a reasonable person to conclude that the replica is a firearm. (Education Code 48900(m))

13. Committed or attempted to commit a sexual assault as defined in Penal Code 261, 266c, 286, 288, **former** 288a, or 289, or committed a sexual battery as defined in Penal Code 243.4 (Education Code 48900(n))

    No student may be disciplined prior to a finding being made pursuant to the grievance process established by 34 CFR 106.45, in accordance with Administrative Regulation 5145.71 Title IX Sexual Harassment Complaint Procedures. However, a district may conduct a non-discipline removal of a student in emergency situations where there is an immediate threat to the health or safety of any student or other individual.

14. Harassed, threatened, or intimidated a student who is a complaining witness or witness in a school disciplinary proceeding for the purpose of preventing that student from being a witness and/or retaliating against that student for being a witness (Education Code 48900(o))

15. Unlawfully offered, arranged to sell, negotiated to sell, or sold the prescription drug Soma (Education Code 48900(p))

16. Engaged in, or attempted to engage in, hazing (Education Code 48900(q))

    Hazing means a method of initiation or pre-initiation into a student organization or body, whether or not the organization or body is officially recognized by an educational institution, which is likely to cause serious bodily injury or personal degradation or disgrace resulting in physical or mental harm to a former, current, or prospective student. Hazing does not include athletic events or school-sanctioned events. (Education Code 48900(q))

17. Engaged in an act of bullying (Education Code 48900(r))

    Bullying means any severe or pervasive physical or verbal act or conduct, including communications made in writing or by means of an electronic act, directed toward one or more students that has or can reasonably be predicted to have the effect of placing a reasonable student**(s)** in fear of harm to self or property; cause the student to experience a substantially detrimental effect on physical or mental health; or cause the student to experience substantial interferences with academic performance or ability to participate in or benefit from the services, activities, or privileges provided by a school. (Education Code 48900(r))

    Bullying includes any act of sexual harassment, hate violence, or harassment, threat, or intimidation, as defined in Education Code 48900.2, 48900.3, or 48900.4 and below in the section "Additional Grounds for Suspension and Expulsion: Grades 4-12," that has any of the effects described above on a reasonable student.

    Bullying also includes an act of cyber sexual bullying by a student through the dissemination of, or the solicitation or incitement to disseminate, a photograph or other visual recording that depicts a nude, semi-nude, or sexually explicit photograph or other visual recording of an identifiable minor, when such dissemination is to another student or to school personnel by means of an electronic act and has or can be reasonably predicted to have one or more of the effects of bullying described above. Cyber sexual bullying does not include a depiction, portrayal, or image that has any serious literary, artistic, educational, political, or scientific value or that involves athletic events or school-sanctioned activities.

    Electronic act means the creation or transmission originated on or off the school site by means of an electronic device, including, but not limited to, a telephone, wireless telephone, or other wireless communication device, computer, or pager, of a communication including, but not limited to: (Education Code 48900(r))

    a. A message, text, sound, video, or image

b. A post on a social network Internet web site, including, but not limited to, posting to or creating a burn page or creating a credible impersonation or false profile for the purpose of causing a reasonable student any of the effects of bullying described above.

Reasonable student means a student, including, but not limited to, a student who has been identified as a student with a disability, who exercises average care, skill, and judgment in conduct for a person of the student's age, or for a person of the student's age and disability. (Education Code 48900(r))

Burn page **means an internet website created for the purpose of causing a reasonable student any of the effects of bullying described above. (Education Code 48900(r))**

Credible impersonation **means to knowingly and without consent impersonate a student for the purpose of bullying the student and such that the student would reasonably believe, or has reasonably believed, that the student was or is the student who was impersonated. (Education Code 48900(r))**

False profile **means a profile of a fictitious student or profile using the likeness or attributes of an actual student other than the student who created the false profile. (Education Code 48900(r))**

An *electronic act* is not considered pervasive conduct solely on the basis that it has been transmitted to the internet or is currently posted on the internet. (Education Code 48900(r))

When a student has been suspended, or other means of correction have been implemented against the student, for an incident of racist bullying, harassment, or intimidation, the principal or designee may, as appropriate, engage both the victim and perpetrator in a restorative justice practice suitable to the needs of the students. Additionally, the principal or designee may also require the perpetrator to engage in a culturally sensitive program that promotes racial justice and equity and combats racism and ignorance and shall regularly check on the victim to ensure that the victim is not in danger of suffering from any long-lasting mental health issues. (Education Code 48900.5)

18. Aided or abetted the infliction or attempted infliction of physical injury on another person, as defined in Penal Code 31 (Education Code 48900(t))

19. Made terrorist threats against school officials and/or school property (Education Code 48900.7)

A terrorist threat includes any written or oral statement by a person who willfully threatens to commit a crime which will result in death or great bodily injury to another person or property damage in excess of $1,000, with the specific intent that the statement is to be taken as a threat, even if there is no intent of actually carrying it out. (Education Code 48900.7)

However, students who voluntarily disclose their use of a controlled substance, alcohol, an intoxicant of any kind, or tobacco in order to seek help through services or supports may not be suspended solely for that disclosure. (Education Code 48900)

A student may not be suspended or expelled for disruption or willful defiance. (Education Code 48900)

Additional Grounds for Suspension and Expulsion: Grades 4-12

A student in grades 4-12 shall be subject to suspension or recommendation for expulsion when it is determined that the student:

1. Committed sexual harassment as defined in Education Code 212.5 (Education Code 48900.2)

   Sexual harassment means conduct which, when considered from the perspective of a reasonable person of the same gender as the victim, is sufficiently severe or pervasive as to have a negative impact upon the victim's academic performance or to create an intimidating, hostile, or offensive educational environment. (Education Code 212.5, 48900.2)

2. Caused, attempted to cause, threatened to cause, or participated in an act of hate violence as defined in Education Code 233 (Education Code 48900.3)

   Hate violence means any act punishable under Penal Code 422.6, 422.7, or 422.75. Such acts include injuring or intimidating a victim, interfering with the exercise of a victim's civil rights, or damaging a victim's property because of the victim's race, ethnicity, religion, nationality, disability, gender, gender identity, gender expression, or sexual orientation; a perception of the presence of any of those characteristics in the victim; or the victim's association with a person or group with one or more of those actual or perceived characteristics. (Education Code 233; Penal Code 422.55)

3. Intentionally engaged in harassment, threats, or intimidation against district personnel or students that is sufficiently severe or pervasive to have the actual and reasonably expected effect of materially disrupting classwork, creating substantial disorder, and invading the rights of school personnel or students by creating an intimidating or hostile educational environment (Education Code 48900.4)

Additional Grounds for Suspension and Expulsion: Grades 9-12

Any student in grades 9-12 may be suspended, but not expelled, for disrupting school activities or otherwise willfully defying the valid authority of supervisors, teachers, administrators, other school officials, or other school personnel engaged in the performance of their duties. (Education Code 48900(k))

Suspension from Class by a Teacher

A teacher may suspend a student from class for the remainder of the day and the following day for any of the acts specified in Education Code 48900 and listed as items #1-18 under "Grounds for Suspension and Expulsion: Grades K-12" above or for disruption or willful defiance at any grade level, including grades K-8. (Education Code 48910)

When suspending a student from class, the teacher shall immediately report this action to the principal or designee and send the student to the principal or designee for appropriate action. If that action requires the continuing presence of the student at school, the student shall be appropriately supervised during the class periods from which the student has been suspended. (Education Code 48910)

As soon as possible after the teacher decides to suspend the student, the teacher shall ask the student's parent/guardian to attend a parent-teacher conference regarding the suspension.

A counselor or psychologist may attend the conference if it is practicable, and a school administrator shall attend if

either the parent/guardian or teacher so requests. (Education Code 48910)

A student suspended from class shall not be returned to class during the period of the suspension without the approval of the teacher of the class and the principal or designee. (Education Code 48910)

A student suspended from class shall not be placed in another regular class during the period of suspension. However, a student assigned to more than one class per day may continue to attend other regular classes except those held at the same time as the class from which the student was suspended. (Education Code 48910)

Additionally, a teacher may refer a student, for any of the acts specified above in Education Code 48900, to the principal or designee for consideration of a suspension from school. (Education Code 48910)

The teacher of any class from which a student is suspended may require the student to complete any assignments and tests missed during the removal. (Education Code 48913)

Suspension by Superintendent, Principal or Principal's Designee

To implement disciplinary procedures at a school site, the principal may, in writing, designate as the principal's designee another administrator or, if the principal is the only administrator at the school site, a certificated employee. As necessary, the principal may, in writing, also designate another administrator or certificated employee as the secondary designee to assist with disciplinary procedures when the principal and the principal's primary designee are absent from the school site.

The Superintendent, principal, or designee shall immediately suspend any student found at school or at a school activity to have committed any of the acts listed in the Board policy under "Authority to Expel" for which a recommendation of expulsion is required. (Education Code 48915(c))

The Superintendent, principal, or designee may impose a suspension for a first offense if it is determined that the student violated any of items #1-5 listed under "Grounds for Suspension and Expulsion: Grades K-12" above or if the student's presence causes a danger to persons. (Education Code 48900.5)

For all other offenses, a student may be suspended only when the Superintendent or principal has determined that other means of correction have failed to bring about proper conduct. (Education Code 48900.5)

When other means of correction are implemented prior to imposing suspension or supervised suspension upon a student, the Superintendent, principal, or designee shall document the other means of correction used and retain the documentation in the student's record. (Education Code 48900.5)

Length of Suspension

The Superintendent, principal, or designee may suspend a student from school for not more than five consecutive school days. (Education Code 48911)

A student may be suspended from school for not more than 20 school days in any school year. However, if a student enrolls in or is transferred to another regular school, an opportunity school, or continuation school or class for the purpose of adjustment, the student may be suspended for not more than 30 school days in a school year. The district may count suspensions that occur while a student is enrolled in another school district toward the maximum number of days for which the student may be suspended in any school year. (Education Code 48903, 48911, 48912)

These restrictions on the number of days of suspension shall not apply when the suspension is extended pending an expulsion. (Education Code 48911)

Due Process Procedures for Suspension

Suspensions shall be imposed in accordance with the following procedures:

1. Informal Conference: Suspension shall be preceded by an informal conference conducted by the Superintendent, principal, or designee with the student and, whenever practicable, the teacher, supervisor, or school employee who referred the student to the principal.

   At the conference, the student shall be informed of the reason for the disciplinary action, including the other means of correction that were attempted before the suspension as required pursuant to Education Code 48900.5, and the evidence against the student, and shall be given the opportunity to present the student's version and evidence. (Education Code 48911)

This conference may be omitted if the Superintendent, principal, or designee determines that an emergency situation exists involving a clear and present danger to the lives, safety, or health of students or school personnel. If a student is suspended without this conference, both the parent/guardian and student shall be notified of the student's right to return to school for the purpose of the conference and the conference shall be held within two school days, unless the student waives the right to it or is physically unable to attend for any reason. In such a case, the conference shall be held as soon as the student is physically able to return to school. (Education Code 48911)

2. Administrative Actions: All requests for student suspension are to be processed by the principal or designee. A school employee shall report the suspension, including the name of the student and the cause for the suspension, to the Superintendent or designee. (Education Code 48911)

3. Notice to Parents/Guardians: At the time of the suspension, a school employee shall make a reasonable effort to contact the parent/guardian by telephone or in person. Whenever a student is suspended, the parent/guardian shall also be notified in writing of the suspension. (Education Code 48911)

   This notice shall state the specific offense committed by the student. (Education Code 48900.8) In addition, the notice ~~may~~ **shall** state the date and time when the student may return to school.

4. Parent/Guardian Conference: Whenever a student is suspended, school officials may request a meeting with the parent/guardian to discuss the cause(s) and duration of the suspension, the school policy involved, and any other pertinent matter. (Education Code 48914)

   If school officials request to meet with the parent/guardian, **a foster youth's educational rights holder, attorney, and county social worker, or an Indian child's tribal social worker, and, if applicable, the county social worker,** the notice may state that the law requires the ~~parent/guardian~~ **individuals** to respond to such requests without delay. However, no penalties may be imposed on the student for the failure of the parent/guardian**, a foster youth's educational rights holder, attorney, and county social worker, or an Indian child's tribal social worker, and, if applicable, the county social worker,** to attend such a conference. The student may not be denied reinstatement solely because the ~~parent/guardian~~ **individuals** failed to attend the conference. (Education Code 48911)

5. Extension of Suspension: If the Board is considering the expulsion of a suspended student from any school or the suspension of a student for the balance of the semester from continuation school, the Superintendent or designee may, in writing, extend the suspension until such time as the Board has made a decision, provided the following requirements are followed: (Education Code 48911)

   a. The extension of the original period of suspension is preceded by notice of such extension with an offer to hold a conference concerning the extension, giving the student an opportunity to be heard. This conference may be held in conjunction with a meeting requested by the student or parent/guardian to challenge the original suspension.

   b. The Superintendent or designee determines, following a meeting in which the student and the student's parent/guardian were invited to participate, that the student's presence at the school or at an alternative school would endanger persons or property or threaten to disrupt the instructional process. (Education Code 48911)

   c. If the student involved is a foster youth, the Superintendent or designee shall notify the district liaison for foster youth of the need to invite the student's attorney and a representative of the appropriate county child welfare agency to attend the meeting. (Education Code 48853.5, 48911, 48918.1)

   d. If the student involved is a homeless child or youth, the Superintendent or designee shall notify the district liaison for homeless students. (Education Code 48918.1)

e. In lieu of or in addition to suspending a student, the Superintendent, principal, or designee may provide services or require the student to participate in an alternative disciplinary program designed to correct the behavior and keep the student in school.

Suspension by the Board

The Board may suspend a student for any of the acts listed under "Grounds for Suspension and Expulsion: Grades K-12," "Additional Grounds for Suspension and Expulsion: Grades 4-12," and "Additional Grounds for Suspension and Expulsion: Grades 9-12" above and within the limits specified under "Suspension by Superintendent, Principal, or Designee" above. (Education Code 48912)

The Board may suspend a student enrolled in a continuation school or class for a period not longer than the remainder of the semester. The suspension shall meet the requirements of Education Code 48915. (Education Code 48912.5)

When the Board is considering a suspension, disciplinary action, or any other action (except expulsion) against any student, it shall hold a closed session if a public hearing would lead to disclosure of information that would violate a student's right to privacy under Education Code 49073-49079. (Education Code 35146, 48912)

The Board shall provide the student and parent/guardian with written notice of the closed session by registered or certified mail or personal service. Upon receiving this notice, the student or parent/guardian may request a public meeting, and this request shall be granted if made in writing within 48 hours after receipt of the Board's notice. However, any discussion that conflicts with any other student's right to privacy still shall be held in closed session. (Education Code 35146, 48912)

On-Campus Suspension

A student for whom an expulsion action has not been initiated and who poses no imminent danger or threat to the school, students, or staff may be assigned to on-campus suspension in a separate classroom, building, or site for the entire period of suspension. The following conditions shall apply: (Education Code 48911.1)

1. The on-campus suspension classroom shall be staffed in accordance with law.

2. The student shall have access to appropriate counseling services.

3. The on-campus suspension classroom shall promote completion of schoolwork and tests missed by the student during the suspension.

4. The student shall be responsible for contacting the student's teacher(s) to receive assignments to be completed in the supervised suspension classroom.

At the time a student is assigned to an on-campus suspension classroom, the principal or designee shall notify the student's parent/guardian in person or by telephone. When the assignment is for longer than one class period, this notification may be made in writing. (Education Code 48911.1)

Superintendent or Principal's Authority to Recommend Expulsion

Unless the Superintendent or principal determines that expulsion should not be recommended under the circumstances or that an alternative means of correction would address the conduct, the Superintendent or principal shall recommend a student's expulsion for any of the following acts: (Education Code 48915)

1. Causing serious physical injury to another person, except in self-defense

2. Possession of any knife or other dangerous object of no reasonable use to the student

3. Unlawful possession of any controlled substance as listed in Health and Safety Code 11053-11058, except for (a) the first offense for the possession of not more than one ounce of marijuana, other than concentrated cannabis, or (b) the student's possession of over-the-counter medication or **(c)** other medication prescribed by a physician

4. Robbery or extortion

5. Assault or battery, as defined in Penal Code 240 and 242, upon any school employee

In determining whether or not to recommend the expulsion of a student, the Superintendent, principal, or designee shall act as quickly as possible to ensure that the student does not lose instructional time. (Education Code 48915)

Student's Right to Expulsion Hearing

Any student recommended for expulsion shall be entitled to a hearing to determine whether the student should be expelled. The hearing shall be held within 30 school days after the Superintendent, principal, or designee determines that the student has committed the act(s) that form the basis for the expulsion recommendation. (Education Code 48918(a))

The student is entitled to at least one postponement of an expulsion hearing for a period of not more than 30 calendar days. The request for postponement shall be in writing. Any subsequent postponement may be granted at the Board's discretion. (Education Code 48918(a))

If the Board finds it impractical during the regular school year to comply with these time requirements for conducting an expulsion hearing, the Superintendent or designee may, for good cause, extend the time period by an additional five school days. Reasons for the extension shall be included as a part of the record when the expulsion hearing is held. (Education Code 48918(a))

If the Board finds it impractical to comply with the time requirements of the expulsion hearing due to a summer recess of Board meetings of more than two weeks, the days during the recess shall not be counted as school days. The days not counted during the recess may not exceed 20 school days, as defined in Education Code 48925. Unless the student requests in writing that the expulsion hearing be postponed, the hearing shall be held not later than 20 calendar days prior to the first day of the next school year. (Education Code 48918(a))

Once the hearing starts, all matters shall be pursued with reasonable diligence and concluded without unnecessary delay. (Education Code 48918(a))

Stipulated Expulsion

After a determination that a student has committed an expellable offense, the Superintendent, principal, or designee shall offer the student and parent/guardian the option to waive a hearing and stipulate to the expulsion or to a suspension of the expulsion under certain conditions. The offer shall be made only after the student or parent/guardian has been given written notice of the expulsion hearing pursuant to Education Code 48918.

The stipulation agreement shall be in writing and shall be signed by the student and parent/guardian. The stipulation agreement shall include notice of all the rights that the student is waiving, including the waiving of the right to have a full hearing, to appeal the expulsion to the County Board of Education, and to consult legal counsel.

A stipulated expulsion agreed to by the student and parent/guardian**, or, when applicable, the person holding the right to make educational decisions for the student**, shall be effective upon approval by the Board.

Rights of Complaining Witness

An expulsion hearing involving allegations of sexual assault or sexual battery may be postponed for one school day in order to accommodate the special physical, mental, or emotional needs of a student who is the complaining witness. (Education Code 48918.5)

Whenever the Superintendent or designee recommends an expulsion hearing that addresses allegations of sexual assault or sexual battery, the Superintendent or designee shall give the complaining witness a copy of the district's suspension and expulsion policy and regulation and shall advise the witness of the right to: (Education Code 48918.5)

1. Receive five days' notice of the scheduled testimony at the hearing
2. Have up to two adult support persons present at the hearing at the time the witness testifies
3. Have a closed hearing during the time the witness testifies

Whenever any allegation of sexual assault or sexual battery is made, the Superintendent or designee shall immediately advise complaining witnesses and accused students to refrain from personal or telephone contact with each other during the time when an expulsion process is pending. (Education Code 48918.5)

Written Notice of the Expulsion Hearing

Written notice of the expulsion hearing shall be forwarded to the student and the student's parent/guardian at least 10 calendar days before the date of the hearing. The notice shall include: (Education Code 48900.8, 48918(b))

1. The date and place of the hearing
2. A statement of the specific facts, charges, and offense upon which the proposed expulsion is based
3. A copy of district disciplinary rules which relate to the alleged violation
4. Notification of the student's or parent/guardian's obligation, pursuant to Education Code 48915.1, to provide information about the student's status in the district to any other district in which the student seeks enrollment

   This obligation applies when a student is expelled for acts other than those described in Education Code 48915(a) or (c).
5. The opportunity for the student or the student's parent/guardian to appear in person or be represented by legal counsel or by a nonattorney adviser

   Legal counsel means an attorney or lawyer who is admitted to the practice of law in California and is an active member of the State Bar of California.

   Nonattorney adviser means an individual who is not an attorney or lawyer, but who is familiar with the facts of the case and has been selected by the student or student's parent/guardian to provide assistance at the hearing.
6. The right to inspect and obtain copies of all documents to be used at the hearing
7. The opportunity to confront and question all witnesses who testify at the hearing
8. The opportunity to question all evidence presented and to present oral and documentary evidence on the student's behalf, including witnesses

Additional Notice of Expulsion Hearing for Foster Youth and ~~Homeless~~ Students Experiencing Homelessness, and Indigenous Children

If the student facing expulsion is a foster student **or Indigenous child,** the Superintendent or designee shall also send notice of the hearing to the student's attorney and a representative of an appropriate child welfare agency at least 10 days prior to the hearing. (Education Code 48918.1)

If the student facing expulsion is a homeless student, the Superintendent or designee shall also send notice of the hearing to the district liaison for homeless students at least 10 days prior to the hearing. (Education Code 48918.1)

Any notice for these purposes may be provided by the most cost-effective method possible, including by email or a telephone call. (Education Code 48918.1)

Conduct of Expulsion Hearing

1. Closed Session: Notwithstanding Education Code 35145, the Board shall conduct a hearing to consider the expulsion of the student in a session closed to the public unless the student requests in writing at least five days prior to the hearing that the hearing be a public meeting. If such a request is made, the meeting shall be public to the extent that privacy rights of other students are not violated. (Education Code 48918)

   Whether the expulsion hearing is held in closed or public session, the Board may meet in closed session to deliberate and determine whether or not the student should be expelled. If the Board admits any other person to this closed session, the parent/guardian, the student, and the counsel of the student also shall be allowed to attend the closed session. (Education Code 48918(c))

   If a hearing that involves a charge of sexual assault or sexual battery is to be conducted in public, a complaining witness shall have the right to testify in closed session when testifying in public would threaten serious psychological harm to the witness and when there are no alternative procedures to avoid the threatened harm, including, but not limited to, a videotaped deposition or contemporaneous examination in another place communicated to the hearing room by closed-circuit television. (Education Code 48918(c))

2. Record of Hearing: A record of the hearing shall be made and may be maintained by any means, including electronic recording, as long as a reasonably accurate and complete written transcription of the proceedings can be made. (Education Code 48918(g))

3. Subpoenas: Before commencing a student expulsion hearing, the Board may issue subpoenas, at the request of either the student or the Superintendent or designee, for the personal appearance at the hearing of any person who actually witnessed the action that gave rise to the recommendation for expulsion. After the hearing has commenced, the Board or the hearing officer or administrative panel may issue such subpoenas at the request of the student or the County Superintendent of Schools or designee. All subpoenas shall be issued in accordance with Code of Civil Procedure 1985-1985.2 and enforced in accordance with Government Code 11455.20. (Education Code 48918(i))

   Any objection raised by the student or the Superintendent or designee to the issuance of subpoenas may be considered by the Board in closed session, or in open session if so requested by the student, before the meeting. The Board's decision in response to such an objection shall be final and binding. (Education Code 48918(i))

   If the Board determines, or if the hearing officer or administrative panel finds and submits to the Board, that a witness would be subject to unreasonable risk of harm by testifying at the hearing, a subpoena shall not be issued to compel the personal attendance of that witness at the hearing. However, that witness may be compelled to testify by means of a sworn declaration as described in item #4 below. (Education Code 48918(i))

4. Presentation of Evidence: Technical rules of evidence shall not apply to the expulsion hearing, but relevant evidence may be admitted and used as proof only if it is the kind of evidence on which reasonable persons can rely in the conduct of serious affairs. The decision of the Board to expel shall be supported by substantial evidence that the student committed any of the acts pursuant to Education Code 48900 and listed in "Grounds for Suspension and Expulsion: Grades K-12," "Additional Grounds for Suspension and Expulsion: Grades 4-12," and "Additional Grounds for Suspension and Expulsion: Grades 9-12" above. (Education Code 48918(h))

   Findings of fact shall be based solely on the evidence at the hearing. Although no finding shall be based solely on hearsay, sworn declarations may be admitted as testimony from witnesses whose disclosure of their identity or testimony at the hearing may subject them to an unreasonable risk of physical or psychological harm. (Education Code 48918(f))

   In cases where a search of a student's person or property has occurred, evidence describing the reasonableness of the search shall be included in the hearing record.

5. Testimony by Complaining Witnesses: The following procedures shall be observed when a hearing involves allegations of sexual assault or sexual battery by a student: (Education Code 48918, 48918.5)

   a. Any complaining witness shall be given five days' notice before being called to testify.

   b. Any complaining witness shall be entitled to have up to two adult support persons, including, but not limited to, a parent/guardian or legal counsel, present during the testimony.

   c. Before a complaining witness testifies, support persons shall be admonished that the hearing is confidential.

   d. The person presiding over the hearing may remove a support person who is disrupting the hearing.

   e. If one or both support persons are also witnesses, the hearing shall be conducted in accordance with Penal Code 868.5.

   f. Evidence of specific instances of prior sexual conduct of a complaining witness shall be presumed inadmissible and shall not be heard unless the person conducting the hearing determines that extraordinary circumstances require the evidence to be heard. Before such a determination is made, the complaining witness shall be given notice and an opportunity to oppose the introduction of this evidence. In the hearing on the admissibility of this evidence, the complaining witness shall be entitled to be represented by a parent/guardian, legal counsel, or other support person. Reputation or opinion evidence regarding the sexual behavior of a complaining witness shall not be admissible for any purpose.

g. In order to facilitate a free and accurate statement of the experiences of the complaining witness and to prevent discouragement of complaints, the district shall provide a nonthreatening environment.

i. The district shall provide a room separate from the hearing room for the use of the complaining witness before and during breaks in testimony.

ii. At the discretion of the person conducting the hearing, the complaining witness shall be allowed reasonable periods of relief from examination and cross-examination during which the complaining witness may leave the hearing room.

iii. The person conducting the hearing may:

a. Arrange the seating within the hearing room so as to facilitate a less intimidating environment for the complaining witness

b. Limit the time for taking the testimony of a complaining witness to normal school hours, if there is no good cause to take the testimony during other hours

c. Permit one of the support persons to accompany the complaining witness to the witness stand

6. Decision: The Board's decision as to whether to expel a student shall be made within 40 school days after the student is removed from school, unless the student requests in writing that the decision be postponed. (Education Code 48918(a))

Alternative Expulsion Hearing: Hearing Officer or Administrative Panel

Instead of conducting an expulsion hearing itself, the Board may contract with the county hearing officer or with the Office of Administrative Hearings of the State of California for a hearing officer. The Board may also appoint an impartial administrative panel composed of three or more certificated personnel, none of whom shall be members of the Board or on the staff of the school in which the student is enrolled. (Education Code 48918)

A hearing conducted by the hearing officer or administrative panel shall conform to the same procedures applicable to a hearing conducted by the Board as specified above in "Conduct of Expulsion Hearing," including the requirement to issue a decision within 40 school days of the student's removal from school, unless the student requests that the decision be postponed. (Education Code 48918(a) and (d))

The hearing officer or administrative panel shall, within three school days after the hearing, determine whether to recommend expulsion of the student to the Board. If expulsion is not recommended, the expulsion proceeding shall be terminated and the student shall be immediately reinstated and permitted to return to the classroom instructional program from which the referral was made, unless another placement is requested in writing by the student's parent/guardian. Before the student's placement decision is made by the student's parent/guardian, the Superintendent or designee shall consult with the parent/guardian and district staff, including the student's teachers, regarding other placement options for the student in addition to the option to return to the classroom instructional program from which the student's expulsion referral was made. The decision to not recommend expulsion shall be final. (Education Code 48918(e))

If expulsion is recommended, findings of fact in support of the recommendation shall be prepared and submitted to the Board. All findings of fact and recommendations shall be based solely on the evidence presented at the hearing. The Board may accept the recommendation based either upon a review of the findings of fact and recommendations submitted or upon the results of any supplementary hearing the Board may order. (Education Code 48918(f))

In accordance with Board policy, the hearing officer or administrative panel may recommend that the Board suspend the enforcement of the expulsion. If the hearing officer or administrative panel recommends that the Board expel a student but suspend the enforcement of the expulsion, the student shall not be reinstated and permitted to return to the classroom instructional program from which the referral was made until the Board has ruled on the recommendation. (Education Code 48917, 48918)

Final Action by the Board

Whether the expulsion hearing is conducted in closed or open session by the Board, a hearing officer, or an administrative panel or is waived through the signing of a stipulated expulsion agreement, the final action to expel shall be taken by the Board in public. (Education Code 48918(j))

The Board's decision is final. If the decision is to not expel, the student shall be reinstated immediately. If the decision is to suspend the enforcement of the expulsion, the student shall be reinstated under the conditions of the suspended expulsion.

Upon ordering an expulsion, the Board shall set a date when the student shall be reviewed for readmission to a school within the district. For a student expelled for any "mandatory recommendation and mandatory expulsion" act listed in the section "Authority to Expel" in the accompanying Board policy, this date shall be one year from the date the expulsion occurred, except that the Board may set an earlier date on a case-by-case basis. For a student expelled for other acts, this date shall be no later than the last day of the semester following the semester in which the expulsion occurred. If an expulsion is ordered during summer session or the intersession period of a year-round program, the Board shall set a date when the student shall be reviewed for readmission not later than the last day of the semester following the summer session or intersession period in which the expulsion occurred. (Education Code 48916)

At the time of the expulsion order, the Board shall recommend a plan for the student's rehabilitation, which may include: (Education Code 48916)

1. Periodic review~~, as well as assessment at the time of review, for readmission~~ **and a preliminary assessment for readmission at least 45 days before the end of the expulsion term. The plan shall be tailored to the student's needs and address the behavior that led to the expulsion.**

2. Recommendations for improved academic performance, tutoring, special education assessments, job training, counseling, employment, community service, or other rehabilitative programs **(Education Code 48916)**

The Board shall assist the student in locating accessible opportunities that are necessary to complete the requirements of the student's plan for rehabilitation, including, but not limited to, opportunities for counseling and community service. (Education Code 48916)

The Board shall not require the student or the student's parents/guardians to pay for any costs or services the Board determines to be necessary for the student to complete the student's plan of rehabilitation. (Education Code 48916)

With parent/guardian consent, students who have been expelled for reasons relating to controlled substances or alcohol may be required to enroll in a county-sponsored drug rehabilitation program before returning to school. (Education Code 48916.5)

Written Notice to Expel

The Superintendent or designee shall send written notice of the decision to expel to the student or parent/guardian. This notice shall include the following:

1. The specific offense committed by the student for any of the causes for suspension or expulsion listed above under "Grounds for Suspension and Expulsion: Grades K-12," "Additional Grounds for Suspension and Expulsion: Grades 4-12," or "Additional Grounds for Suspension and Expulsion: Grades 9-12" (Education Code 48900.8)

2. The fact that a description of readmission procedures will be made available to the student and parent/guardian (Education Code 48916)

3. Notice of the right to appeal the expulsion to the County Board (Education Code 48918)

4. Notice of the alternative educational placement to be provided to the student during the time of expulsion (Education Code 48918)

5. Notice of the student's or parent/guardian's obligation to inform any new district in which the student seeks to enroll of the student's status with the expelling district, pursuant to Education Code 48915.1 (Education Code 48918)

Decision to Suspend Expulsion Order

In accordance with Board policy, when deciding whether to suspend the enforcement of an expulsion order, the Board shall take into account the following criteria:

1. The student's pattern of behavior

2. The seriousness of the misconduct

3. The student's attitude toward the misconduct and willingness to follow a rehabilitation program The suspension of the enforcement of an expulsion shall be governed by the following:

1. The Board may, as a condition of the suspension of enforcement, assign the student to a school, class, or program appropriate for the student's rehabilitation. This rehabilitation program may provide for the involvement of the student's parent/guardian in the student's education. However, a parent/guardian's refusal to participate in the rehabilitation program shall not be considered in the Board's determination as to whether the student has satisfactorily completed the rehabilitation program. (Education Code 48917)

2. During the period when enforcement of the expulsion order is suspended, the student shall be on probationary status. (Education Code 48917)

3. The suspension of the enforcement of an expulsion order may be revoked by the Board if the student commits any of the acts listed under "Grounds for Suspension and Expulsion: Grades K-12," "Additional Grounds for Suspension and Expulsion: Grades 4-12," or "Additional Grounds for Suspension and Expulsion: Grades 9-12" above or violates any of the district's rules and regulations governing student conduct. (Education Code 48917)

4. When the suspension of enforcement of an expulsion order is revoked, a student may be expelled under the terms of the original expulsion order. (Education Code 48917)

5. Upon satisfactory completion of the rehabilitation assignment, the Board shall reinstate the student in a district school. Upon reinstatement, the Board may order the expunging of any or all records of the expulsion proceedings. (Education Code 48917)

6. The Superintendent or designee shall send written notice of any decision to suspend the enforcement of an expulsion order during a period of probation to the student or parent/guardian. The notice shall inform the parent/guardian of the right to appeal the expulsion to the County Board, the alternative educational placement to be provided to the student during the period of expulsion, and the student's or parent/guardian's obligation to inform any new district in which the student seeks to enroll of the student's status with the expelling district, pursuant to Education Code 48915.1(b). (Education Code 48918(j))

7. Suspension of the enforcement of an expulsion order shall not affect the time period and requirements for the filing of an appeal of the expulsion order with the County Board. (Education Code 48917)

Appeal

The student or parent/guardian is entitled to file an appeal of the Board's decision with the County Board. The appeal must be filed within 30 days of the Board's decision to expel, even if the expulsion order is suspended and the student is placed on probation. (Education Code 48919)

If the student submits a written request for a copy of the written transcripts and supporting documents from the district simultaneously with the filing of the notice of appeal with the County Board, the district shall provide the student with these documents within 10 school days following the student's written request. (Education Code 48919)

Notification to Law Enforcement Authorities

Prior to the suspension or expulsion of any student, the principal or designee shall notify appropriate city or county law enforcement authorities of any student acts of assault which may have violated Penal Code 245. (Education Code 48902)

The principal or designee shall notify appropriate city or county law enforcement authorities of any student acts which may involve the possession or sale of narcotics or of a controlled substance, or of any student acts involving the possession, sale, or furnishing of firearms, explosives, or other dangerous weapons in violation of Education Code 48915(c)(1) or (5) or Penal Code 626.9 and 626.10. (Education Code 48902)

Within one school day after a student's suspension or expulsion, the principal or designee shall notify appropriate county or district law enforcement authorities, by telephone or other appropriate means, of any student acts which may violate Education Code 48900(c) or (d), relating to the possession, use, offering, or sale of controlled substances,

alcohol, or intoxicants of any kind. (Education Code 48902)

Placement During Expulsion

The Board shall refer expelled students to a program of study that is: (Education Code 48915, 48915.01)

1. Appropriately prepared to accommodate students who exhibit discipline problems
2. Not provided at a comprehensive middle, junior, or senior high school or at any elementary school, unless the program is offered at a community day school established at any of these
3. Not housed at the school site attended by the student at the time of suspension

When the placement described above is not available and when the County Superintendent so certifies, students expelled for only acts described in items #6-12 under "Grounds for Suspension and Expulsion: Grades K-12" and items #1-3 under "Additional Grounds for Suspension and Expulsion: Grades 4-12" above may be referred to a program of study that is provided at another comprehensive middle, junior, or senior high school or at an elementary school. (Education Code 48915)

The program for a student expelled from any of grades K-6 shall not be combined or merged with programs offered to students in any of grades 7-12. (Education Code 48916.1)

The Board shall receive notification from the County Superintendent of Schools, if at any time during the expulsion term and for any reason the County Superintendent is unable to serve the students expelled by the district. Upon notification, the Board shall ensure that another educational program is provided to the student for the duration of the expulsion order which may include entering into an agreement with a County Superintendent in another county to provide education services for the district's expelled students. (Education Code 48916.1)

Upon the change of a student's eligibility for an educational program or at the request of the student's parent/guardian, the Board shall review with the student and the student's parent/guardian the educational options for expelled students as outlined in the plan to provide education services to expelled students pursuant to Education Code 48926. (Education Code 48916.1)

Readmission After Expulsion

Prior to the date set by the Board for the student's readmission:

1. The Superintendent or designee shall hold a conference with the parent/guardian and the student. At the conference, the student's rehabilitation plan shall be reviewed and the Superintendent or designee shall verify that the provisions of this plan have been met. School regulations shall be reviewed and the student and parent/guardian shall be asked to indicate in writing their willingness to comply with these regulations.

   As part of the review process, the Board shall, upon being informed by the Superintendent or designee, indicate whether the student had access to the necessary resources to complete the student's rehabilitation plan. A rehabilitation plan that is not completed due to financial or transportation barriers or a lack of viable opportunities to complete a term of the rehabilitation plan shall not be a basis to deny the readmission of a student. (Education Code 48916)

2. The Superintendent or designee shall transmit to the Board a recommendation regarding readmission. The Board shall consider this recommendation in closed session. If a written request for open session is received from the parent/guardian or adult student, it shall be honored to the extent that privacy rights of other students are not violated.
3. If the readmission is granted, the Superintendent or designee shall notify the student and parent/guardian, by registered mail, of the Board's decision regarding readmission.
4. The Board may deny readmission only if it finds that the student **either:**

   a. has not satisfied the conditions of the rehabilitation plan or that the student continues to pose a danger to campus safety or to other district students or employees.

b.

That the student continues to exhibit documented behaviors that the student was expelled for or is documented to have committed one or more new acts during the expulsion term that would make the student eligible for another expulsion (Education Code 48916)

5. **If Board denies the readmission of a student pursuant to Item #4, the expulsion term may be extended for one semester at a time, at which point the student shall be reassessed for readmission pursuant to Item #1**

6. If the Board denies the readmission of a student, the Board shall determine either to continue the student's placement in the alternative educational program initially selected or to place the student in another program that serves expelled students, including placement in a county community school.

7. The Board shall provide written notice to the expelled student and parent/guardian describing the reasons for denying readmittance into the regular program. This notice shall indicate the Board's determination of the educational program which the Board has chosen. The student shall enroll in that program unless the parent/guardian chooses to enroll the student in another school district. (Education Code 48916)

No student shall be denied readmission into the district based solely on the student's arrest, adjudication by a juvenile court, formal or informal supervision by a probation officer, detention in a juvenile facility, enrollment in a juvenile court school, or other such contact with the juvenile justice system. (Education Code 48645.5)

Maintenance of Records

The district shall maintain a record of each suspension and expulsion, including its specific cause(s). (Education Code 48900.8)

Expulsion records of any student shall be maintained in the student's mandatory interim record and sent to any school in which the student subsequently enrolls upon written request by that school. (Education Code 48918(k))

The Superintendent or designee shall, within five working days, honor any other district's request for information about an expulsion from this district. (Education Code 48915.1)

Policy 5145.2: Freedom Of Speech/Expression Status: ADOPTED

Original Adopted Date: 02/15/2007 | Last Revised Date: 05/01/2008 | Last Reviewed Date: 05/01/2008

The Board of Education believes that free inquiry and exchange of ideas are essential parts of a democratic education. The Board respects students' rights to express ideas and opinions, take stands on issues, and support causes, even when such speech is controversial or unpopular.

Additionally, the Board is committed to providing a welcoming, safe, and supportive school environment that protects students from discrimination, harassment, intimidation, and bullying, or other types of expression prohibited by law.

On-Campus Expression
Students shall have the right to exercise freedom of speech and of the press including, but not limited to, the use of bulletin boards; **the use of official district or school websites or social media accounts identified and made available for such purposes;** the distribution of printed materials or petitions; the wearing of buttons, badges and other insignia; and the right of expression in official publications. **(Education Code 48907)**

~~Students' freedom of expression shall be limited only as allowed by law in order to maintain an orderly school environment and to protect the rights, health and safety of all members of the school community. (Education Code 48907)~~

Students' freedom of expression shall be restricted only as established by this Board policy, the accompanying administration regulation, Education Code 234.1, 48907, and 48950, and other applicable state and federal laws. Such restrictions include, but are not limited to, prohibitions against students making any expressions or distributing or posting any materials that:

1. **Are obscene, libelous, or slanderous**
2. **Are discriminatory, harassing, intimidating, or bullying**
3. **Are likely to immediately incite action on district property or during district-sponsored programs or activities that is unlawful or that violates Board policies, administrative regulations, or other district or school rules**
4. **Substantially disrupt the orderly operation of the district**

Student expression that violates this Board policy or the accompanying administrative regulation may be subject to discipline in accordance with Board Policy/Administrative Regulation 5144 - Discipline, Board Policy/Administrative Regulation 5144.1 - Suspension and Expulsion/Due Process, and Administrative Regulation 5144.2 - Suspension and Expulsion/Due Process (Students with Disabilities).

School officials shall not engage in prior restraint of material prepared for official school publications except insofar as the content constitutes prohibited speech/expression as defined below.

The Superintendent or designee shall not discipline any high school student solely on the basis of speech or other communication that would be constitutionally protected when engaged in outside of school, but may impose discipline for harassment, threats or intimidation unless constitutionally protected. (Education Code 48950)

On-campus student expression, including but not limited to any type of electronic communication, is generally constitutionally protected but shall be subject to discipline when such expression poses a direct threat to the safety and/or well-being of students or school personnel.

Electronic Communications
School-related student speech, which is accomplished through electronic means, is subject to the same protection and regulation as other forms of student speech. Conduct or expression of opinion by a student, whether in class or out of class, that violates school regulations, substantially interferes with the educational process, or which disrupts the educational environment may subject a student to disciplinary action.

A student who commits any of the acts enumerated under Education Code, Section 48900, et seq. via any electronic medium including, but not limited to, electronic mail or external web sites, may be subject to discipline as described in that section.

Prohibited Speech/Expression
Students' freedom of expression shall be limited only as allowed by Education Code 48907, 48950, and other applicable state and federal laws.

Students are prohibited from making any expression or distributing or posting any materials that are harassing, threatening, intimidating or obscene, libelous or slanderous. Students are also prohibited from making any expressions that so incites students as to create a clear and present danger of the commission of unlawful acts on school premises, the violation of school rules, or substantial disruption of the school's orderly operation. (Education Code 48907)

The use of "fighting words" or epithets is prohibited in those instances where the if speech is abusive and insulting, rather than a communication of ideas, and the speech is used in an abusive manner in a situation that presents an actual danger that will cause a breach of the peace.

School officials shall not engage in prior restraint of material prepared for official school publications except insofar as the content of the material violates the law. (Education Code 48907)

The Superintendent or designee shall not discipline any high school student solely on the basis of speech or other communication that would be constitutionally protected when engaged in outside of school, but may impose discipline for harassment, threats, or intimidation unless constitutionally protected. (Education Code 48950)

Off-Campus Expression
~~A student shall be subject to discipline for off-campus expression, including expression on off-campus Internet web sites and other electronic communication devices when such expression poses a direct threat to the safety and/or well being of other students, staff, or school property, or substantially disrupts the education program. The Superintendent or designee shall document the impact the expression had or could be expected to have on the school program.~~

Off-campus student expression, such as electronic expression via a personal device or online expression via a personal social media account, may subject a student to discipline when such expression poses a threat to the safety of other district students, staff, or property, or does or is likely to substantially disrupt the district's educational program. As necessary, the Superintendent or designee shall document the actual or expected impact of the expression.

Regulation 5145.2: Freedom Of Speech/Expression Status: ADOPTED

Original Adopted Date: 03/15/2007 | Last Revised Date: 05/01/2008 | Last Reviewed Date: 05/01/2008

Distribution or Posting of Printed Materials and Circulation of Petitions

1. Prior approval by Principal/designee required

   All school related printed matter that students seek to distribute or post on campus or in the immediate vicinity of school property including, but not limited to, all petitions, circulars, leaflets, posters, banners, and newspapers shall be submitted to the principal/designee for approval prior to such distribution or posting. Such material shall not be distributed or posted on campus until such time as the principal/designee approves of the distribution or posting. Such material shall be approved unless the material contains prohibited speech or expression as defined in Board policy 5020. The principal or designee must render a decision upon any materials submitted no later than seven school days after receipt thereof. Any student may appeal a decision concerning this policy to the Superintendent who shall, after review, render a final decision.

   In accordance with Board Policy 1325, "No staff member shall communicate or distribute, or permit another person to communicate or distribute to any school any notice relating to other than school matters without first obtaining the Superintendent's permission."

2. Time/Place/Manner Restrictions

   a. Coercion shall not be used to induce students or any other person to accept printed matter or to sign petitions; neither shall any funds or donations be collected for any material distributed. Students may collect signatures on petitions concerning school or non-school issues.

   b. All printed matter distributed, circulated, or posted on campus or in the immediate vicinity of school property shall bear the name and the address or contact location of the sponsoring organization or individual.

   c. The number of students or groups of students that may distribute materials in anyone day may be limited. Only students of the individual school shall be accorded the privilege of distributing materials on school premises.

   d. Distribution shall be limited to outdoor areas, designated by the principal. The place and activity of distribution shall not interfere with the normal flow of traffic within the school corridors and entrance walkways nor impede entrance to or exits from school premises.

   e. Distribution of printed matter shall be limited to the hours before school begins, during the lunch hour, and after school is dismissed. No class time shall be utilized for distribution of non-school materials.

   f. No written materials distributed or circulated pursuant to this policy shall be left unattended or stacked for pickup while unattended at any place in the school or school grounds or property in the immediate vicinity of the school.

   g. School authorities may restrict the use of certain bulletin boards to school announcements. Other bulletin board space may be designated for the use of students and student organizations for posting notices relating to out-of-school activities or matters of general interest to students.

   h. Notices or other communications must be officially dated with the valid posting dates, and such material must be removed when the valid posting date expires to assure full access to the bulletin boards. The valid posting dates must allow a reasonable time for access to the bulletin boards.

   i. **At the principal or designee's discretion, any materials or petitions may be required to include a disclaimer indicating that views, ideas, and opinions expressed in the materials or petitions are not sponsored by and do not necessarily reflect those of the school or district.**

School-Sponsored Publications

Students shall have the right to exercise freedom of speech and of the press in official school publications, except for expression that is obscene, libelous, slanderous, or so incites students as to create a clear and present danger of the commission of unlawful acts on school premises, the violation of lawful school regulations, or the substantial disruption of the orderly operation of the school. (Education Code 48907)

1. Definition

   a. Official school publications shall be defined as any material produced by students in the journalism, newspaper, yearbook, or writing classes and distributed to the student body either free of charge or for a fee. The district shall be considered the publisher of such material. **(Education Code 48907)**

   b. The overriding purpose of an official school publication is instructional, with an intent of providing an educational experience. As such, it requires guidance and direction, as does any other subject in the curriculum. A school publication differs from non-campus publications in that: 1) it is financed by the school district and the student body; 2) it is as an official school vehicle for communicating with students and their parents; and 3) it is supervised by school faculty members to maintain professional standards of English and journalism and to maintain the provisions of Education Code 48907 and Board policy 5020.

2. Guidelines

   The following guidelines shall govern the production of official school publications in the district:

   a. **Each principal may develop a school publications code outlining the responsibility of the students who produce or support the production of content for official student publications and the staff who serve as advisors of official student publications.**

      All official student publications shall be held to professional standards of language and journalism. (Education Code 48907)

   b. **At the principal's discretion, all official student publications may be required to include a disclaimer indicating that views, ideas, and opinions expressed in official student publications do not necessarily reflect those of the school or district.**

   c. The major function of an official school publication is one of instruction and education. In its secondary function as a vehicle for communication with students and parents, primary emphasis should be given to topics that are of interest to students. Students may deal with international, national, state, community, or school issues.

   d. Practices and policies of the school or the district may be discussed and constructively criticized.

   e. A district committee shall be responsible for developing and implementing a statement of journalistic standards relating to accuracy, truth, objectivity, journalistic style, and presentation of all views of controversial issues.

   f. Editorials may freely aim constructive criticism at school organizations, procedures, and policies, but such criticism should reflect the opinions of a cross-section of the publication staff. Editorial columns which express only the opinion of the writer shall be bylined.

   g. As space permits, editorial pages shall be open to any students wishing to express their ideas or to rebut editorials in a letter. School newspapers shall print a fair selection and accurate representation of the letters they receive.

   h. Student editors of an official school publication shall be responsible for assigning and editing the news, editorial, and feature content of that publication. However, it shall be the responsibility of the faculty adviser to supervise the production by the student staff, to maintain professional standards of English, other languages, and journalism and to implement the directives set forth in district policy and/or administrative regulations.

   i. The district shall be the publisher of all school publications. School publications shall not include prohibited speech as defined in Board policy 5145.2. The contents of all official school publications shall comply with 48907 of the California Education Code, Board policy 5145.2, and other applicable laws.

      If the principal considers material submitted for publication to violate Education Code 48907, he/she shall notify the student, without undue delay, and give specific reasons why the submitted material may not be published. Absent extraordinary circumstances, such notice should be given in sufficient time to allow the student time to either modify the materials or to seek review of the principal's determination from the Superintendent or designee. Prior to any restriction of student speech, school officials shall consider any feasible alternative options to restricting the speech.

j. The principal or designee of each school shall be the person to review any disputes over inclusion of material in official school publications or concerning the implementation of this policy and shall exercise any administrative responsibility required by Board policy. The principal or designee must render a decision upon any dispute submitted concerning the content of official school publications no later than seven schooldays after receipt thereof. Any student may appeal a decision concerning this policy to the Superintendent who shall, upon review, render a final decision.

k. **If a staff advisor to an official student publication or other school staff with similar responsibility determines that material intended for inclusion in an official student publication violates the accompanying Board policy or this regulation, the staff advisor or other school staff shall first consider any feasible alternative options to limiting the material. If no other option is feasible, the staff advisor or other school staff shall notify the official student publication, via the student editor-in-chief or similar position, and the student authors of the material without undue delay and shall provide specific reasons for why the submitted material may not be published. Absent extraordinary circumstances, such notice shall be given in sufficient time to allow the official student publication or the student authors to either modify the material or request review by the Superintendent or designee.**

Clothing, Buttons, and Badges

Permissible buttons, badges, armbands, and clothing bearing slogans or sayings may be worn at all times. A student shall not wear buttons, badges, armbands, or other clothing bearing slogans or sayings that either:

1. Intrudes upon the rights of other students including, but not limited to, derogatory and injurious remarks directed at students' minority status such as race, religion, and sexual orientation.

2. Causes substantial disruption to school activities.

No employee shall interfere with a student's wearing of such items solely on the grounds that the message may be controversial or unpopular with students or staff. **(Education Code 234.1, 48907)**

Disciplinary Action

Any student who willfully and knowingly distributes any petition, circular, newspaper, and other printed matter; or wears any buttons, badges or other insignia; or posts on a bulletin board any item which violates the stated prohibitions in Board policy 5145.2 shall be subject to disciplinary action in accordance with established disciplinary procedures of this school district.

Student Participation in Civic or Political Events

Upon providing advanced notice and in accordance with Board Policy/Administrative Regulation 5113 - Absences and Excuses, a student in middle or high school shall be permitted one excused absence per school year in order to participate in a civic or political event such as voting, poll working, strikes, public commenting, or attending candidate speeches, political or civic forums, or town halls. (Education Code 48205)

Burbank Unified School District
Instructional Services

REPORT TO THE BOARD

TO:	Members of the Board of Education
FROM:	Peter Knapik, Assistant Superintendent of Educational Services
PREPARED BY:	Peter Knapik, Assistant Superintendent of Educational Services
SUBMITTED BY:	Glenda Diaz Nolasco, Administrative Secretary II
DATE:	May 7, 2026
SUBJECT:	Approval of Agreement with Houghton Mifflin Harcourt for English 3D with Writable Curriculum from July 1, 2026 through June 30, 2027

Background:
English 3D with Writable is a comprehensive supplemental literacy resource designed to accelerate language development, critical thinking, and academic writing skills for students who need additional support, particularly multilingual learners. English 3D focuses on building oral language, vocabulary, and structured academic conversations through engaging, scaffolded lessons that emphasize collaboration and real-world connections. Writable complements this by providing a robust digital writing platform where students practice argumentative, informational, and narrative writing with guided feedback, revision tools, and opportunities for peer review. Together, they create an integrated approach that strengthens both spoken and written communication, helping students gain confidence and proficiency across content areas.

The curriculum is supported by ongoing professional development that equips educators with practical strategies for implementation and differentiation. Teachers receive training on fostering productive academic discourse, using data to inform instruction, and leveraging Writable's feedback tools to support student growth. Professional learning often includes modeling of lessons, collaborative planning, and coaching cycles, ensuring that teachers can effectively meet diverse student needs. This sustained support helps educators build expertise in language development and writing instruction, ultimately leading to stronger student outcomes and a more inclusive, language-rich classroom environment.

District-Wide Goals 2025-26:
1. Students will be career/college ready via high-quality instruction
2. Students will be physically, emotionally, and mentally healthy

Discussion/Issues:

To ensure students receive the explicit language development required by the California English Language Development (ELD) Standards, we are seeking to supplement the district's core materials with English 3D, Houghton Mifflin Harcourt publisher.

English 3D is a research-based, teacher-led ELD curriculum designed by Dr. Kate Kinsella to accelerate academic English acquisition. It provides explicit instruction in reading, writing, speaking, and listening, with a strong focus on academic vocabulary, language functions, and the grammatical structures needed for success in content-area classes.

The program includes high-interest texts, structured instructional routines, and daily opportunities for oral and written language production. Lessons incorporate multimodal activities, contemporary topics, close reading, academic discussions, presentations, and formal writing. All components align with state English Language Proficiency assessments and support progress toward reclassification.

Software licenses for English 3D with Writable provide:

- Online access to student texts, workbooks, and digital lessons
- Integration with Writable®, a writing tool offering scaffolded formal writing assignments and a gradual-release model to build writing independence

English 3D supplements the district-adopted curriculum and is used exclusively to support English Learners, particularly those in ELD Levels 1–3 who require targeted language development to access grade-level coursework.

Fiscal Impact:

The English 3D with Writable program will be paid with Title III English Learner funding. The program includes print and digital curriculum. Services in two-hour professional development for staff with ongoing training and support.

Recommendation:

Peter Knapik, Assistant Superintendent of Educational Services, recommends that the Board of Education approve the Agreement between the Burbank Unified School District and Houghton Mifflin Harcourt for English 3D with Writable paid by Title III, English Learner funding, not to exceed $24,102.73, under various object codes, (01.0-42030.1-0-47600-10000-XXXX-4310000), effective July 1, 2026 through June 30, 2027, and that authority to sign this agreement be exercised pursuant to BUSD –AR 3314, as presented.

Proposal #009576040

Prepared For

Burbank High School

Attention:
Jennifer Goldenberg
jennifergoldenberg@burbankusd.org

For the Purchase of:

English 3D with Writable 1-Year

Prepared By
Elizabeth Hebgen
liz.hebgen@hmhco.com

Please submit this proposal with your purchase order.

Purchase orders or duly executed service agreements for **Professional Services** purchased, must be submitted at least 30 days before the service event date.

For greater detail, the complete Terms of Purchases may be reviewed here:
http://www.hmhco.com/common/terms-conditions

Coupon Code: PRODPB15

Send **Check Payments** to:
HMH Education Company
14046 Collection Center Drive
Chicago, IL 60693

Attention:
Jennifer Goldenberg
jennifergoldenberg@burbankusd.org

HMH Confidential and Proprietary

Send **Orders** to:
orders@hmhco.com
FAX: 800-269-5232

ISBN		Title	Price	Quantity	Value of all Materials	Value of Free Materials	Value of Charged Materials
		English 3D with Writable					
		Student Digital Licenses					
1913762	9798202174773	English 3D Student License WR 1 Year Includes: English 3D Student License 1 Year Writable for English 3D Digital Student Resources 1 Year Implementation Success	$55.80	165	$9,207.00	$1,381.05	$7,825.95
		Total for Student Digital Licenses	**$7,825.95**				
		Teacher Digital Licenses					
1913800	9798202174858	English 3D Teacher License WR 1 Year Includes: English 3D Teacher License 1 Year Writable for English 3D Digital Teacher Resources 1 Year Access to Teacher's Corner	$248.40	5	$1,242.00	$1,242.00	
		Total for Teacher Digital Licenses	**$0.00**				
		A la Carte Items Available for Purchase					
		Teacher/Classroom Materials					
		Course B Volume 1					
1913956	9798202176005	English 3D Course B Volume 1 Teaching Guide	$475.00	2	$950.00	$142.50	$807.50
		Course B Volume 2					
1913958	9798202175893	English 3D Course B Volume 2 Teaching Guide	$475.00	1	$475.00	$71.25	$403.75
		Course C					
1815055	9780358609582	English 3D Course C Teaching Guide	$475.00	1	$475.00	$71.25	$403.75
		Student Materials					
		Course B Volume 1					
1913790	9798202175923	English 3D Course B Volume 1 Language & Writing Portfolio	$30.00	20	$600.00	$90.00	$510.00
1913948	9798202175961	English 3D Course B Volume 1 Issues Book	$20.00	20	$400.00	$60.00	$340.00
		Course B Volume 2					
1913792	9798202175930	English 3D Course B Volume 2 Language & Writing Portfolio	$30.00	80	$2,400.00	$360.00	$2,040.00
1913950	9798202175978	English 3D Course B Volume 2 Issues Book	$20.00	50	$1,000.00	$150.00	$850.00
		Course C					
1815045	9780358609483	English 3D Course C Language & Writing Portfolio	$30.00	80	$2,400.00	$360.00	$2,040.00
1815050	9780358609537	English 3D Course C Issues Book	$20.00	50	$1,000.00	$150.00	$850.00
		Total for A la Carte Items Available for Purchase	**$8,245.00**				
		Total for English 3D with Writable	**$16,070.95**				
		Professional Services - SIS English 3D with Writable					
		Implementation Success Plan					
1913883	9798202175435	English 3D Getting Started Live Online Grades K-12 2-Hour This two-hour Getting Started session introduces teachers to their new program's structure, essential resources, and implementation recommendations. Teachers will also explore Ed, HMH's teaching and learning platform, and the professional learning pathway on Ed. Getting Started is the initial step toward a successful first 30 days. Ongoing training and support will be also provided on Ed. There, teachers will access a guided learning pathway based on their grade level and implementation timeline. A recommended sequence of topics, which includes live sessions, videos, interactive media, and related resources, will help teachers plan, teach, and assess student learning using their new HMH program. After teachers complete each pathway topic, they receive a certificate of completion.	$800.00	1	$800.00	$800.00	

Coupon Code: PRODPB15

Send **Check Payments** to:
HMH Education Company
14046 Collection Center Drive
Chicago, IL 60693

Attention:
Jennifer Goldenberg
jennifergoldenberg@burbankusd.org

Send **Orders** to:
orders@hmhco.com
FAX: 800-269-5232

HMH Confidential and Proprietary

	ISBN	Title	Price	Quantity	Value of all Materials	Value of Free Materials	Value of Charged Materials
1913886	9798202175428	English 3D Leader Success Live Online Grades K-12 1-Hour During this one-hour live online session, leaders learn about the design and resources of their HMH program. To help leaders develop a plan to guide implementation and set up teachers for a successful start, HMH Coaches share tools and best teaching and student learning practices to observe in the classroom. Leaders also preview the Teacher Success Pathways and resources on HMH Ed for ongoing support.	$400.00	1	$400.00	$400.00	
Total for Implementation Success Plan			**$0.00**				
Coaching							
1883292	9798202010903	Coachly Getting Started Live Online Grades K-12 1-Hour In this initial district-scheduled session, participants will explore the Coachly experience, discuss the impact of collaboration on student and teacher growth, and develop strategies to make the most of their Coachly partnership.	$400.00	1	$400.00	$400.00	
1883291	9798202010897	Coachly Leader Success Live Online Grades K-12 1-Hour In this building level leader-focused session, participants will explore the Coachly experience, discuss its value and the impact of collaboration on student and teacher growth, and develop strategies to make the most of their Coachly partnership. Included are recommendations for usage and progress monitoring and details around next steps for teachers to launch their partnerships.	$400.00	1	$400.00	$400.00	
1866775	9780358933724	English 3D Coachly License Grades K-12 1 Year Coachly provides one-on-one coaching to teachers to build their program expertise, support lesson planning, and discuss data-driven, actionable strategies to grow teacher practice. Each teacher is matched with a certified coach with whom they can schedule virtual sessions and message via the Ed platform. Coachly licenses are a one year digital subscription.	$1,500.00	1	$1,500.00	$225.00	$1,275.00
Total for Coaching			**$1,275.00**				
Implementation Support for English 3D with Writable							
1913885	9798202175510	English 3D Getting Started In-Person Grades K-12 6-Hour In this six-hour Getting Started, participants explore the essential components of English 3D with Writable and its instructional model, walk through a lesson, and practice accessing key resources on HMH Ed. To strengthen learning, they collaborate with colleagues to explore their new program and engage in rich discussions. Participants become prepped and ready to plan their first lessons as they continue learning on the Teacher Success Pathway. Getting Started is the initial step towards a successful first 30 days. Ongoing training and support will be provided on Ed through their English 3D with Writable Teacher Success Pathway. This guided learning pathway offers a recommended sequence of topics, including live sessions, videos, interactive media, and related resources, to help teachers plan, teach, and assess student learning using their new HMH program. After teachers complete pathway topics, they receive a certificate of completion.	$4,200.00	1	$4,200.00	$630.00	$3,570.00
Total for Implementation Support for English 3D with Writable			**$3,570.00**				
Total for Professional Services - SIS English 3D with Writable			**$4,845.00**				

Coupon Code: PRODPB15

Send **Check Payments** to:
HMH Education Company
14046 Collection Center Drive
Chicago, IL 60693

Attention:
Jennifer Goldenberg
jennifergoldenberg@burbankusd.org

Send **Orders** to:
orders@hmhco.com
FAX: 800-269-5232

HMH Confidential and Proprietary

ISBN	Title	Price	Quantity	Value of all Materials	Value of Free Materials	Value of Charged Materials

Total Savings:	**$4,933.05**
Subtotal Purchase Amount:	**$20,915.95**
Shipping & Handling:	**$1,195.53**
Sales Tax:	**$991.25**
Total Cost of Proposal (PO Amount):	**$23,102.73**

Coupon Code: PRODPB15

Send **Check Payments** to:
HMH Education Company
14046 Collection Center Drive
Chicago, IL 60693

Attention:
Jennifer Goldenberg
jennifergoldenberg@burbankusd.org

Send **Orders** to:
orders@hmhco.com
FAX: 800-269-5232

HMH Confidential and Proprietary

Total Cost of Proposal (PO Amount): $23,102.73

Thank you for considering HMH as your partner. We are committed to providing an excellent experience and delivering ongoing, high-quality service to our customers. To meet these goals, we want to ensure you are aware of the below Terms of Purchase. These terms help us process your order quickly, efficiently, and accurately, ensuring successful delivery and implementation of our solutions.

- Please return this cost proposal with your signed purchase order that matches product, prices and shipping charges.
- Provide the exact address for *delivery* of print materials. The shipping address may be your district warehouse or individual school sites, but it is essential that this is accurate.
- Please supply the name of each important district point of contact for all aspects of the solution including their direct contact information (email/phone):
  - Point of Contact for Print materials
  - Point of Contact for Digital materials
  - Point of Contact for Scheduling Professional Development
  - Email address for Accounts Payable contact
- Please confirm that we have the correct 'Ship to' and 'Sold to' information on the cost proposal.

Ship to:	**Sold to:**
Burbank High School	Burbank Unified School Dist
902 N 3RD ST	1900 W OLIVE AVE
BURBANK, CA 91502-1018	BURBANK, CA 91506-2438

- Please provide funding start and end dates.
- Please note HMH bills products and services as they are fulfilled. You may receive multiple invoices for your order.
- HMH reserves the right to transmit documents electronically.
- Our payment terms are 30 days from the invoice date.
- Print subscription material quantities may be adjusted across grades for like products, to accommodate enrollment fluctuations, quantities cannot be adjusted between different programs or copyrights.
- Our shipping terms are FOB shipping point. The shipping term for your proposal is Destination.
- Any proposed shipping or tax amount provided on this proposal, is based on the Ship To account location quoted within.
- If the location of your delivery changes, please include the proper sales tax and shipping charges for that location in the applicable Purchase Order
- Should any of these Terms of Sale conflict with any preprinted terms on your purchase order, the HMH terms of service shall apply.

Thank you in advance for supplying us with the necessary information at time of purchase.
Our goal is to ensure your success throughout the duration of this agreement, which starts with a highly successful delivery of our solution.

For greater detail, the complete Terms of Purchase may be reviewed here: http://www.hmhco.com/common/terms-conditions

Date of Proposal: 2/19/2026 **Proposal Expiration Date: 6/30/2026**

Coupon Code: PRODPB15

Send **Check Payments** to:
HMH Education Company
14046 Collection Center Drive
Chicago, IL 60693

Attention:
Jennifer Goldenberg
jennifergoldenberg@burbankusd.org

Send **Orders** to:
orders@hmhco.com
FAX: 800-269-5232

HMH Confidential and Proprietary

Burbank Unified School District
Instructional Services

REPORT TO THE BOARD

TO:	Members of the Board of Education
FROM:	Peter Knapik, Assistant Superintendent of Educational Services
PREPARED BY:	Peter Knapik, Assistant Superintendent of Educational Services
SUBMITTED BY:	Glenda Diaz Nolasco, Administrative Secretary II
DATE:	May 7, 2026
SUBJECT:	Approval of Agreement with Right at School for Child Care Paid by Expanded Learning Opportunities Program from July 1, 2026 through June 30, 2027

Background:

The Expanded Learning Opportunities Program (ELO-P) funds after-school and summer enrichment programs for transitional kindergarten through sixth grade.

"Expanded learning" refers to before-school, after-school, summer, or intersession programs that focus on developing pupils' academic, social, emotional, and physical needs and interests through hands-on, engaging learning experiences. The Legislature intends that expanded learning programs be pupil-centered, results-driven, and include community partners, complementing but not replicating learning activities within the regular school day and school year.

District-Wide Goals 2025-26:

1. Students will be career/college ready via high-quality instruction
2. Students will be physically, emotionally, and mentally healthy

Discussion/Issues:

Right at School provides on-site childcare and enrichment programs designed to extend the school day through a mix of academic support, physical activity, and social development. Their services are typically hosted directly at partner elementary schools, offering convenience for working parents.

Core Programs

- **Before- & After-School Care (The Right Club):** Provides a safe environment starting as early as 6:30 AM and ending as late as 6:00 PM. The program includes structured time for homework, healthy snacks, and social interaction.
- **Summer & Break Camps:** Full-day programs offered during summer, winter, and spring breaks, as well as on teacher in-service days. These camps focus on weekly themes like "Water Wizards" or "Young Detectives".
- **Preschool & Early Learning:** A Kindergarten-readiness program that uses play-based learning to build foundational skills in literacy, math, and social-emotional development.
- **Discovery Clubs:** Short-term, specialty enrichment clubs focused on specific interests like STEM, arts, or sports.

Daily Schedule Highlights

A typical afternoon at Right at School follows a structured routine:

- **Town Hall & Snack:** A community building start where students share news and prepare for the day's activities.
- **Right Moves:** A 10-minute fitness blast (dancing, yoga, or games) to help kids "get the wiggles out" before focusing.
- **Homework Help:** Dedicated time (typically 45 minutes) where educators coach students through assignments in age-appropriate groups.
- **Disguised Learning®:** Hands-on enrichment activities—such as chemistry experiments or engineering challenges—designed to meet state learning standards while feeling like play.
- **Self-Directed Inquiry:** Flexible time at the end of the day for arts and crafts, board games, or reading, accommodating staggered parent pick-ups.

Key Features

- **Flexible Enrollment:** Parents can often choose 1-day to 5-day weekly schedules.
- **Language Adventures:** Daily 10-minute sessions where younger students learn Spanish and older students learn American Sign Language (ASL).
- **Financial Assistance:** Right at School often provides sibling, military, and free/reduced lunch discounts.

ELOP funding will be used to pay for childcare rates for unduplicated students, including those participating in the free or reduced lunch program, English learners, students experiencing homelessness, and foster students.

ELOP child care will include 180 days of the regular school year, five days of Winter Break, five days of Spring Break, and 20 days of Summer Break.

Fiscal Impact:

The program will be offered through a blended model. All fees for unduplicated students will be paid using Expanded Learning Opportunities Program (ELOP) State funding. Families that qualify for ELOP funding will be invoiced by Right at School to the District for payment. Families of students who do not qualify for ELOP funding will pay the Right at School rates directly to Right at School. The District will reserve up to $1,000,000 to pay for the fees for ELOP eligible families/students.

Recommendation:

Peter Knapik, Assistant Superintendent of Educational Services, recommends that the Board of Education approve the Agreement between the Burbank Unified School District and Right at School to for childcare services of eligible families/students and a percentage of administrative costs based on ELOP-eligible students paid by the Expanded Learning Opportunities Program (ELOP), not to exceed $1,000,000 (01.0-2600.0-0-00000-27000-5810-7429000), effective July 1, 2026 through June 30, 2027, and that authority to sign this agreement be exercised pursuant to BUSD –AR 3314, as presented.

SERVICES, SCHOOL FACILITIES LICENSE AND BUILDING USE AGREEMENT

By and Between:

RIGHT AT SCHOOL, LLC

and

BURBANK UNIFIED SCHOOL DISTRICT

This SERVICES, SCHOOL FACILITIES LICENSE AND BUILDING USE AGREEMENT ("Agreement") is entered into this 7th day of May , 2026 (the "Effective Date") by and between Right at School, LLC (the "Provider" or "Licensee"), and the BURBANK UNIFIED DISTRICT (the "District" or "Licensor"). The Provider and the District are referred to in this Agreement as the Parties or individually as a Party.

RECITALS

A. The District and the Provider wish to enter into an agreement that defines their relationship, describes services that the Provider will provide for and on behalf of the District, and establishes the manner in which services will be provided.

B. The Provider has expertise in providing services of the type described in this Agreement and has the necessary knowledge, skill, and experience to provide those services for the District.

C. The District desires to retain the Provider to provide the services described in this Agreement at the schools listed in this Agreement or any of the Schedules incorporated herein.

D. The Parties agree that Right At School will operate the District's enrichment programs at the schools set forth below as of the Effective Date. Programs include summer camp and/or other enrichment programming, including, but not limited to, Grades 2-5 before & after school (180 days), winter-break (5 days), spring-break (5 days), summer programming (20 days), half and full day programming, and teacher in-service day programming.

E. The District may provide written authorization to Right At School to operate the District's enrichment programs at one or more schools, which authorization Right At School may, in writing, accept or reject in its sole discretion.

F. If Right At School accepts the authorization to operate the District's enrichment programs at one or more schools, such programs shall be operated in accordance with and subject to this Agreement.

G. This Agreement includes a License and Facilities Use Agreement that authorizes Provider to use the District's facilities to operate the District's out-of-school-time programs and authorizes Provider to operate Provider's summer camp and other camp programs in School Facilities when the District's schools are not in operation, subject to the terms and conditions set forth in Schedule D.

H. This Agreement includes the following Schedules which are fully incorporated herein.

Schedule A: General Terms and Conditions
Schedule B: Services
Schedule C: Payments (if applicable)
Schedule D: School Facilities License and Building Use Agreement

AGREEMENT

Section 1: Incorporation of Recitals and Schedules. The foregoing Recitals and Schedules are incorporated into and made a part of this Agreement.

Section 2: School Facilities; Authorized Use.

2.1 The District is the owner of the school facilities identified in Schedule B of this Agreement (the "School Facilities").

2.2 The District authorizes Provider to operate District's out-of-school time programs at the School Facilities.

2.3 The District also authorizes Provider to operate Provider's summer and other camp programs at the School Facilities when the School Facility is not in session and subject to the additional terms and conditions set forth in Schedule D.

Section 3. Term; Renewal.

3.1 Initial Term. This Agreement is for a term commencing on the Effective Date and continuing through July 31, 2027 (the "Term"), unless the Agreement is terminated sooner in accordance with the terms of this Agreement.

3.2 Renewal. After the Term of this Agreement, the Agreement will automatically renew on a year to year basis, unless either Party provides written notice to the other Party no later than sixty (60) days prior to the then applicable Termination Date of the notifying Party's intent not to renew the Agreement for another year.

Section 4: Minimal Enrollment in Parent-Paid Programs

4.1. Right At School requires that a minimum of 15 students be pre-registered in each parent-paid program prior to the start of the academic year. If the number of pre-registered students in a parent-paid program is below 15 on or after 45 days before programming begins, Right At School may choose to close or consolidate the program with two (2) weeks' written notice. This section applies only to fully or partially parent-paid programs. It does not apply to fully District-paid programs. In fully District-paid programs, the Parties will agree upon enrollment requirements in Schedule C.

IN WITNESS WHEREOF, the Parties have executed this Agreement as of the Effective Date.

BURBANK UNIFIED SCHOOL DISTRICT	RIGHT AT SCHOOL, LLC
By: _____	By:_____
Its: _____	Its:_____
Date: _____	Date:_____

SCHEDULE A

GENERAL TERMS AND CONDITIONS

These Terms and Conditions apply to the provision of Services by Right at School, LLC (referred to herein as "Provider") identified in the SERVICES, LICENSE AND SCHOOL FACILITIES USE AGREEMENT (referred to herein as the "Agreement") to which this Schedule is attached. These Terms and Conditions are incorporated into the Agreement and together with the Agreement and other Schedules identified therein form the binding terms of the agreement between the Provider and the District.

Section 1. Incorporation of Recitals. The foregoing Recitals are incorporated into and made a part of these Terms and Conditions.

Section 2. Scope of Services. The Provider agrees to provide the Services described in Schedule B to the Agreement (the "Services") in accordance with and subject to these Terms and Conditions.

Section 3. Statement of Work. The Provider or its subcontractors will be responsible for performing the Services; providing all materials necessary for the Services; and paying all taxes, employees' salaries or contracts, and other expenses associated with performing the Services. The Provider or its subcontractors will be responsible to direct and control the performance of the Services on a day-to-day basis and to provide and supervise all personnel who perform the Services. The District, from time to time, may request changes to the scope of Services.

Section 4. Independent Contractor. The relationship between the Provider and the District shall be that of an independent contractor.

Section 5. Schedule for the Services. The District and Provider will cooperate to develop a schedule for the Services that is mutually agreeable to the Parties. For each session, the schedule will include the starting and ending time, the location or locations in the School Facilities where the Provider will perform the Services, and any other information that the Parties mutually deem appropriate.

Section 6. Enrollment of Students. The District will assist Provider in enrolling students in Provider's programs by providing information regarding the Provider's programs to parents and guardians. The District also will provide information about students to Provider, including student and parent names, grades, and email addresses, within 30 days of the effective date of this Agreement. Provider and each School will collectively disseminate Right at School programming announcements and information to students and families.

Section 7. Tuition; Fees Paid to District. The Provider shall be solely responsible for charging and collecting tuition and fees from the parents and guardians of students enrolled in the District's or Provider's programs operating in the School Facilities. Subject to the terms and conditions in Schedule D, the Parties may agree that Provider will pay to the District a portion of the tuition and fees Provider collects for the Services to compensate the District or designated school for the use of School Facilities and other District and school resources.

Section 8. District Subsidies and Payments. This Section applies only if the District is providing a subsidy to support some or all of the Services. Where the District has determined it will cover some or all of the cost of program tuition for District students, the District shall pay Provider directly in the amounts and on the schedule set for in Schedule C to the Agreement ("the Program Fee"). For all other students and/or portion of students' fees, Provider shall be solely responsible for charging and collecting tuition from the parents or legal guardians of enrolled students. The Program Fee or any portion thereof not received within ten (30) days after its due date (the "Delinquency Date") shall automatically (and without notice) incur a one-time late charge of five percent (5%) of the delinquent amount. Further, in addition to any rights provided to Provider in this Agreement, any portion of the Program Fee not paid prior to the Delinquency Date shall bear interest from the Delinquency Date at the "Delinquency Interest Rate" of five percent (5%) per annum. Notwithstanding the above, if the Delinquency Interest Rate exceeds the maximum interest rate allowed by law, the Delinquency Interest Rate shall be reduced to the highest rate allowed by law. By mutual written agreement, the District and Provider may add additional dates of service, services, and rates to the Provider Fee Schedule.

Section 9. Staffing by Provider. The District has retained the Provider to perform the Services because of its expertise and the skill and experience of its professional staff and personnel, and the skill and experience of its subcontractors. The Provider must maintain and use sufficient staff to effectively fulfill the Provider's obligations under the Agreement, and the Provider's personnel, and any subcontractor's personnel, must be fully qualified to perform their respective duties.

Section 10. Confidential Information.

10.1 Acknowledgment of Confidentiality. The Parties acknowledge that they may be exposed to confidential and proprietary information of the other party including, without limitation, curriculum and instructional materials, other technical information (including functional and technical specifications, designs, analysis, research, processes, computer programs, and methods), business information (including marketing, financial, and personnel information), intellectual property, trade secrets, and other information designated as proprietary or confidential expressly or by the circumstances in which it is provided ("Confidential Information"). Confidential Information does not include (i) information already known or independently developed by the recipient, (ii) information in the public domain through no wrongful act of the recipient, or (iii) information received by the recipient from a third party who was free to disclose it.

10.2 Covenant Not to Disclose or Misuse Confidential Information. Each Party agrees that, with respect to the other Party's Confidential Information, it shall not, without the other Party's prior written approval, use, disclose to third parties, alter, or remove the Confidential Information in a manner not expressly authorized by these Terms and Conditions except as approved in advance by the owner of the information. Each Party shall use at least the same degree of care in safeguarding the other Party's Confidential Information as it uses in safeguarding its own confidential information.

10.3 Ownership of Curriculum and Instructional Materials. All curriculum, instructional materials, and other documents and items used in the performance of the Services are the property of the Provider and are to be treated as proprietary and confidential. Such items shall not be used by the District for any purpose without the express written consent of the

Provider.

10.4 Student Records. The Provider will comply with the relevant requirements of the Family Educational Rights and Privacy Act (FERPA) (20 U.S.C. 1232g) and all other applicable federal and state law regarding the confidentiality of personally identifiable student information provided by the District. Any release of information contained in student education records provided by the District must be approved by the District. To protect the confidentiality of student education records provided by the District, the Provider will limit access to such records to those employees who reasonably need access to them in order to perform their responsibilities under the Agreement.

Section 11. Compliance with Laws. The Provider and its subcontractors must perform the Services in compliance with all applicable federal, state, county, and local laws and regulations and all applicable District policies and rules in effect now or later and as amended from time to time, including the Drug Free Workplace Act, FERPA, the Protection of Pupil Rights Amendment, the Health Insurance Portability and Accountability Act, and all applicable non-discrimination laws.

Section 12. Background Checks. The Provider will comply with all applicable childcare background check laws for its employees and subcontractors that will have contact with children through their performance of the Services or, if the Services are not subject to childcare laws, other applicable laws related to background checks for employees of school contractors. If any District employees perform Services for the Provider, the Provider shall be entitled, to the extent permitted by law, to rely on the District's criminal background check and determination of suitability for employment, and the Provider shall not be required to perform any additional background check or determination of suitability for such persons.

Section 13. Insurance. Provider, at its own expense, shall procure and maintain the following insurance policies in the following amounts:

13.1 Workers' Compensation and Employers' Liability Insurance. Workers Compensation insurance affording workers' compensation benefits for all employees as required by state and federal laws, and Employers' Liability Insurance covering all employees who are to provide Services under this agreement, with a bodily injury per accident limit of liability of $ 1,000,000, bodily injury by disease limit each employee of $1,000,000 and bodily injury by disease policy limit of $1,000,000. The workers' compensation policy must contain a waiver of subrogation clause.

13.2 Commercial General Liability Insurance. Commercial General Liability Insurance or equivalent with limits of One Million Dollars ($1,000,000) per occurrence and Three Million Dollars ($3,000,000) in the aggregate.

13.3 Automobile Liability Insurance. Automobile Liability Insurance when any motor vehicle (whether non-owned or hired) is used in connection with Services to be performed, with limits of One Million Dollars ($1,000,000) per accident for bodily injury and property damage.

13.4 Umbrella/Excess Liability Insurance. One or more layers of Umbrella or Excess Liability Insurance with total limits of Four Million Dollars ($4,000,000) per occurrence and in the aggregate that supplements the above-stated Employer's Liability, Commercial General

Liability and Automobile Liability insurance policies.

13.5 Professional Liability Insurance. Professional Liability insurance with limits of One Million Dollars ($1,000,000) per claim and Three Million Dollars ($3,000,000) in the aggregate.

13.6 Sexual Abuse and Molestation Insurance. Sexual Abuse and Molestation Insurance with limits Six Million Dollars ($6,000,000) per claim and in the aggregate, single policy.

13.7 The Parties recognize that insurance coverage may change based on market conditions and other factors outside the control of the Parties. With respect to Provider's coverage, the coverage stated in a new Certificate of Insurance ("COI") shall replace the insurance terms set forth above effective upon issuance of the new COI.

13.8 If the District objects to Provider's new coverage terms, it shall notify the Provider of the objection in writing within fifteen (15) days of receiving the new COI and include a detailed basis for the objection.

13.9 If the District objects to the insurance coverage indicated in a new COI, the Parties will meet and confer within thirty (30) days after the District provides notice of its objection and will engage in good faith efforts to resolve the objection.

Section 14. Additional Insureds.

14.1 Provider shall include the District as an additional insured to the Commercial General Liability and Automobile Liability insurance policies described above.

14.2 The District shall include the Provider as an additional insured to its Commercial General Liability policies.

Section 15. Termination.

15.1 Termination for Insufficient Enrollment. Provider may terminate this Agreement on the basis of insufficient enrollment as set forth in Section 4 of the Agreement.

15.2 Termination for Default. Either Party may terminate the Agreement if the other Party materially fails to observe or perform any covenant, obligation, or provision of this Agreement, and the Party's material failure continues for a period of thirty days after it receives a written notice of default from the other Party.

15.3 Termination for Convenience. Either Party may terminate the Agreement for convenience upon 90 days written notice to the other party.

15.4 Payment for Services Rendered. In the event of any termination, the Provider may charge tuition and fees and shall be obligated to pay usage fees, if any are agreed to by the Parties, to the District in accordance with Schedules C and D to the Agreement up to the date the Agreement is terminated.

Section 16. Cooperation. Each Party agrees to cooperate with the other Party with respect to the performance of the Services in an effort to provide quality programming for students within

the District.

Section 17. Indemnification.

17.1 The Provider agrees to indemnify, defend and hold harmless the District, and its Board members or trustees, officers, employees, agents, volunteers, successors, and assigns ("District Indemnitees"), from and against claims, liabilities, damages, losses, judgments, costs and expenses (including reasonable attorneys' fees and litigation costs) (collectively, "Claims"), to the extent they result from the negligent, willful or intentional misconduct of the Provider. This agreement to indemnify, defend and hold harmless does not extend to any Claims, damages, losses or expenses caused by, related to, or arising from failure by District to comply with its responsibilities under this Agreement, or the negligent, willful or intentional misconduct of the District or any District Indemnitees.

17.2 The District agrees to indemnify, defend and hold harmless the Provider and its members, officers, employees, agents, volunteers, successors, and assigns ("Provider Indemnitees"), from and against claims, liabilities, damages, losses, judgments, costs and expenses (including reasonable attorneys' fees and litigation costs) (collectively, "Claims"), to the extent they result from the negligent, willful or intentional misconduct of the District. This agreement to indemnify, defend and hold harmless does not extend to any Claims caused by, related to, or arising from the failure by Provider to comply with its responsibilities under this Agreement or negligent, willful or intentional conduct of the Provider or any Provider Indemnitees.

17.3 This section shall survive the termination of this Agreement.

Section 18: General Provisions.

18.1 Recordkeeping. The Provider shall maintain books and records relating to the performance of the Services including records of the enrollment of students, collection of tuition and fees, and payment of fees to the District. The District shall have a right to inspect such records upon notice to the Provider at a time that is mutually convenient for the Parties.

18.2 Entirety. The Agreement, together with the Schedules attached hereto, and these Terms and Conditions, constitute the entire Agreement between the Parties with respect to the subject matter hereof, and supersedes any other negotiations, agreements or communications, whether written or oral, that have been made by either Party.

18.3 Governing Law. The Agreement shall be governed by and construed in accordance with the laws of the State of which the District is located.

18.4 Severability. In case any provision in the Agreement and/or these Terms and Conditions is held to be invalid, illegal or unenforceable, the validity, legality and enforceability of the remaining provisions shall not be affected.

18.5 Authority to Execute. Each Party represents and warrants to the other that the Agreement has been duly authorized and that the person who executed the Agreement is authorized to do so on behalf of the Party. The Agreement may be executed in two or more counterparts.

18.6 Assignment. Neither Party may assign the Agreement in whole or in part without

the prior written approval of the other Party.

18.7 California ELOP Compliance.

8.7.1 Pursuant to California Education Code Section 8483.4(b-d) as incorporated into California Education Code Section 46120(b)(5), Provider agrees to notify the District by the next working day following, and to submit a written report within seven days of, the occurrence of any health- or safety-related issues, including, but not limited to, issues involving criminal background clearances for employees, building safety, and any event specified in Section 8483.4(c). For purposes of this section, an "event" includes any of the following:

- Death of a child from any cause.
- Any injury to a child that requires medical treatment.
- Any unusual incident or child absence that threatens the physical or emotional health or safety of a child.
- Any suspected child abuse or neglect, as defined in Section 11165.6 of the California Penal Code.
- Epidemic outbreaks.
- Poisonings.
- Fires or explosions that occur in or on the premises.
- Exposure to toxic substances.
- An arrest of an employee of the Provider.
- Any other event as specified by the District in accordance with applicable law.

8.7.2 Pursuant to California Education Code Section 8483.4(d) as incorporated into California Education Code Section 46120(b)(5), Provider will request from parents or guardians pupil health information, such as whether a pupil has allergies or asthma, before pupil enrollment. The Parties understand and agree that parents or guardians may provide this information at their discretion and are not required to provide pupil health information in order for the pupil to receive services pursuant to this Agreement.

8.7.3 Provider will provide information within the possession or control of the Provider that is needed by the District to comply with the District's ELOP reporting obligations and audit requirements.

SCHEDULE B

Services

Provider will operate the following programs:

Tuition-based Before School (all sites)

Tuition-based After School (all sites)

Tuition-based Non-School Day (sites TBD)

Tuition-based Summer Camp (sites TBD)

ELOP After School (all sites)

ELOP Intersession Program (sites TBD)

Tuition-Based Programming: The following programming applies to the 2026-2027 academic school year (180 instructional days), winter break (5 days), spring break (5 days) and summer programming (20 days) for parent or guardian students in grades 2-5.

Before School programming from Mondays through Fridays from 7:00am - start of school during the Academic School Year.

After School programming from Mondays through Fridays from end of school day to 6:00pm during the Academic School Year.

Provider will also operate on Non-School Days to be determined by the provider and district.

Provider will offer the following discounts for recurring tuition for Non-ELOP-Eligible students whose families elect to participate in tuition-based programming: Before and After School Right Club: 50% for district employees, 10% discount for military families, and 10% discount for siblings. Provider will also accept state government-approved subsidies.

The Programs will run at the following schools pending a minimum full-time enrollment of 15 tuition-based students per school. Provider shall not be obligated to operate a program at any site that does not meet minimum enrollment requirements.

A. Bret Harte Elementary - 3200 W Jeffries Ave, Burbank CA 91505
B. George Washington Elementary - 2322 N Lincoln Ave, Burbank CA 91505
C. Joaquin Miller Elementary - 720 E Providence Ave, Burbank CA 91501
D. Providencia Elementary - 1919 N Ontario St, Burbank CA 91501
E. R.L Stevenson Elementary - 3333 Oak St, Burbank CA 91505
F. Ralph Emerson Elementary - 720 E Cypress, Burbank CA 91501
G. Theodore Roosevelt Elementary - 850 N Cordova St, Burbank CA 91505
H. Thomas Edison Elementary - 2110 W Chestnut St, Burbank CA 91506

I. Thomas Jefferson Elementary - 1900 N Sixth St, Burbank CA 91504
J. Walt Disney Elementary - 1220 W Orange Grove Ave, Burbank CA 91506
K. William Mckinley Elementary - 349 W Valencia Ave, Burbank CA 91506

ELOP Programming: The following payment schedule applies to the 2026-2027 academic school year (180 instructional days), winter break (5 days), spring break (5 days) and summer programming (20 days) for the district to the provider for students who are eligible for ELOP or ASES funding for students in grades 2-5.

After School programming from Mondays through Fridays from end of school day to 6:00pm during the Academic School Year.

Provider will also operate Intersession programming on Non-School Days for 9.0 hours to be determined by the provider and district.

The Programs will run at the following schools pending a minimum full-time enrollment as outlined in Schedule C for ELOP students. Provider shall not be obligated to operate a program at any site that does not meet minimum enrollment requirements.

A. Bret Harte Elementary - 3200 W Jeffries Ave, Burbank CA 91505
B. George Washington Elementary - 2322 N Lincoln Ave, Burbank CA 91505
C. Joaquin Miller Elementary - 720 E Providence Ave, Burbank CA 91501
D. Providencia Elementary - 1919 N Ontario St, Burbank CA 91501
E. R.L Stevenson Elementary - 3333 Oak St, Burbank CA 91505
F. Ralph Emerson Elementary - 720 E Cypress, Burbank CA 91501
G. Theodore Roosevelt Elementary - 850 N Cordova St, Burbank CA 91505
H. Thomas Edison Elementary - 2110 W Chestnut St, Burbank CA 91506
I. Thomas Jefferson Elementary - 1900 N Sixth St, Burbank CA 91504
J. Walt Disney Elementary - 1220 W Orange Grove Ave, Burbank CA 91506
K. William Mckinley Elementary - 349 W Valencia Ave, Burbank CA 91506

SCHEDULE C

Payments

Section 1. District Payments to Provider (**select one**)

District will not pay Provider for any of the Services described in the Agreement.
District will pay Provider for some or all of the Services described in the Agreement.

Section 2. District Payments to Provider –

The following payment schedule applies to the 2026 - 2027 Academic School Year of 180 days + 30 Intercession days:

Program	Hours	Grade Level	Projected Enrollment per School	Cost per student
Elementary After School	Bell to 6 PM	2nd - 5th	20	$2,400
TOTAL Projected Cost per Elementary After School				**$48,000**
TOTAL Projected Cost for all Elementary After School (11 sites)				**$528,000**

Program	Hours	Grade Level	Projected Enrollment per School	Cost per student
Intersession	8:30 AM -5:30 PM or 8:00 AM - 5:00 PM	2nd - 5th	20	$600
TOTAL Projected Cost for Intersession per site				**$12,000**
TOTAL Projected Cost for After School & Intersession				**$540,000**

By mutual agreement, the District may choose to pay for additional students to attend programming at the rates outlined in Schedule C. Additional students will be billed on a per student basis once the minimums are reached.

Section 3. Invoicing and Payment – District Payments to Provider - N/A

3.1 District will pay Provider based on the minimums outlined in Schedule C

3.2 RAS will submit an invoice to District dated as of the last day of the previous service month. Payment will be due within 30 days after invoice date. For example, for services provided in September, RAS will submit an invoice dated October 31, and District will pay within 45 days of the invoice date.

3.3 RAS will submit Invoices to Dr. Peter Knapik at peterknapik@burbankusd.org and Dr. Oscar Macias at oscarmacias@burbankusd.org

3.4 District will submit payments to Account information listed on the bottom of each invoice for ACH payments.

Section 4. Provider Payments to District (**select one**)

District will not charge Provider a facility use fee or require a revenue share in exchange for Provider's use of the District's facilities.
District will charge Provider a facility use fee or revenue share for use of the District's facilities.

4.1 Provider agrees to pay the District the sum of 5% of the District's After School, parent-paid revenue at each site per year. The provider will remit payment to the District, semi-anually in February and August.

SCHEDULE D

Facilities License and Building Use Agreement

THIS FACILITIES LICENSE AND BUILDING USE AGREEMENT ("License Agreement") is entered into as of the above date by and between BURBANK UNIFIED SCHOOL DISTRICT ("District" or "Licensor"), and RIGHT AT SCHOOL, LLC a limited liability company organized under the laws of the State of Delaware ("Licensee"). The Licensor and Licensee also are referred in this Agreement each as a "Party" or collectively at the "Parties" as appropriate.

In consideration of and in accordance with the terms, covenants and conditions set forth hereinafter and in the Parties Services, Facilities License And Building Use Agreement ("Services Agreement"), the District hereby licenses to Licensee and permits Licensee to use parts of the School Facilities described in Subsection 1.2 below. Individually, each facility is a "School Facility." Collectively the facilities also may be referred to as the "Properties." Each School Facility also may be referred to in this License Agreement as a "School."

Section 1. Specific Terms.

1.1 Identity and Addresses of Parties.

Licensor:

Burbank Unified School District
1900 W. Olive Ave
Burbank, CA 91506

Licensee:

Right At School, LLC
909 Davis Street, Suite 500
Evanston, Illinois 60201

1.2 Description of Properties.

Licensor hereby licenses to Licensee, for operation of the District's or Licensee's student enrichment programs, designated spaces in the following Properties owned and operated by Licensor. The specific classrooms and other spaces in each Property to be used by Licensee shall be determined by agreement between the District or School principal at each Property and Licensee.

A. Bret Harte Elementary - 3200 W Jeffries Ave, Burbank CA 91505

B. George Washington Elementary - 2322 N Lincoln Ave, Burbank CA 91505
C. Joaquin Miller Elementary - 720 E Providence Ave, Burbank CA 91501
D. Providencia Elementary - 1919 N Ontario St, Burbank CA 91501
E. R.L Stevenson Elementary - 3333 Oak St, Burbank CA 91505
F. Ralph Emerson Elementary - 720 E Cypress, Burbank CA 91501
G. Theodore Roosevelt Elementary - 850 N Cordova St, Burbank CA 91505
H. Thomas Edison Elementary - 2110 W Chestnut St, Burbank CA 91506
I. Thomas Jefferson Elementary - 1900 N Sixth St, Burbank CA 91504
J. Walt Disney Elementary - 1220 W Orange Grove Ave, Burbank CA 91506
K. William Mckinley Elementary - 349 W Valencia Ave, Burbank CA 91506

1.3 Effective Date.

The Effective Date of this License Agreement shall be the same as the Effective Date of the Services Agreement

1.4 Term.

The Term of this Licensing Agreement shall be the same as the Term of the Services Agreement.

1.5 Permissible Use of Properties.

1.5.1 Licensee shall use the Properties for the purposes described in the Services Agreement and this License Agreement and shall not use or permit the Property to be used for any other purposes without the prior written consent of the District.

1.5.2 Licensee provides out of school time enrichment programs, including but not limited after school, before school, kindergarten wrap-around, preschool, winter-break, spring-break, half and full day programming, teacher in-service day programming, and summer camp (collectively, the "Programs.")

1.5.3 The Programs are parent-paid programs and will not be subsidized by the District unless the Parties have indicated otherwise in the Service Agreement.

1.5.4 The Licensee's after school, before school, kindergarten and teacher in-service day programs are limited to students enrolled in the district.

1.5.5 The restriction set forth in the previous section regarding District students shall not apply to Provider's winter-break, spring break and summer camp programs which shall be available to all children without regard for their enrollment or residence in the District.

1.5.6 The Licensor may provide authorization to Licensee to provide Programs at additional schools in the District, which authorization either Party may accept or reject in writing in their sole discretion. If both Parties approve an authorization to operate Programs at one or more additional schools, such Programs shall be operated in accordance with and subject to this Agreement.

Section 2. Exterior Signs.

Licensee shall not permanently affix any signs to the exterior of the Properties without the written approval of the District. This section does not prohibit Licensee's use of temporary signs or other materials related to Licensee's programs.

Section 3. Improvements.

Licensee is not authorized to and agrees that it will not place or construct any improvements ("Improvements") on the Property without the prior written approval of the District. Licensee shall be deemed to be the owner of all Improvements until the expiration or sooner termination of this Agreement. The Licensee shall remove Improvements no later than the end of the Term unless directed otherwise in writing by the District.

Section 4. Subletting and Assignment.

Licensee shall not sublet the Property in whole or in part, and shall not assign or transfer this Agreement, or any interest herein, without the prior written consent of the District, which consent may be subject to such conditions as the District may reasonably impose. This provision does not prohibit Licensee from offering elective courses provided by third-party entities subject to the District's prior approval of such courses and entities.

Section 5. Maintenance and Repairs.

5.1 By Licensee.

Licensee shall have the obligation to use the spaces in the Properties designated for its Programs in a clean and orderly manner including placing toys and other equipment of Licensee in storage areas at the end of each program day and placing trash in containers provided by the District.

5.2 By the District.

The District shall have the obligation to clean, maintain and repair the Properties in all other respects.

Section 6. Rent or License Fees

Provider shall pay District the revenue share set forth in Schedule C.

Section 7. Termination; Insurance; Indemnification.

The termination, insurance and indemnification terms and conditions in the Services Agreement shall apply to this Licensing Agreement.

Section 8. Notices.

Any notice to be given hereunder shall be in the same manner set forth in the Services Agreement.

Section 9. Miscellaneous

9.1 Counterparts.

This Agreement may be executed in one or more counterparts, each of which shall be deemed an original, and all of which taken together shall constitute one and the same document.

9.2 Modification.

This Agreement may not be modified or amended except in writing signed by both Parties hereto.

9.3 Nonwaiver.

No waiver by the Parties of any provision of this Agreement or of any breach by a Party hereunder shall be deemed to be a waiver of any other provision hereof, or of any subsequent breach by Licensee of the same or any other provision.

IN WITNESS WHEREOF, the parties hereto have executed this Agreement effective as of the Effective Date set forth in the Services Agreement.

BURBANK UNIFIED SCHOOL DISTRICT	**RIGHT AT SCHOOL, LLC**
_____	_____
By	By
Date: _____	Date:_____

Burbank Unified School District
Instructional Services

REPORT TO THE BOARD

TO:	Members of the Board of Education
FROM:	Peter Knapik, Assistant Superintendent of Educational Services
PREPARED BY:	Peter Knapik, Assistant Superintendent of Educational Services
SUBMITTED BY:	Glenda Diaz Nolasco, Administrative Secretary II
DATE:	May 7, 2026
SUBJECT:	Approval of 2025-2026 Expanded Learning Opportunities Program Plan

---

Background:

The Expanded Learning Opportunities Program (ELO-P) provides funding for afterschool and summer school enrichment programs for transitional kindergarten through sixth-grade students who are enrolled in the free or reduced-price meal program (with an application on file) and are English learners, foster children, or children experiencing homelessness.

"Expanded learning" refers to before-school, after-school, summer, or intersession programs that focus on developing the academic, social, emotional, and physical needs and interests of pupils through hands-on, engaging learning experiences. It is the intent of the Legislature that expanded learning programs be pupil-centered, results-driven, and include community partners, complementing but not replicating learning activities during the regular school day and school year.

This year, BUSD was awarded $3,859,529 from the State of California for the ELOP Program. During the 2025-2026 school year, ELOP program funds will be used to offset the cost of childcare for children in grades transitional kindergarten through sixth grade who are enrolled in the free or reduced-price meal program (an application must be on file) and are English learners, foster children, or children experiencing homelessness. Program funds will be used for 210 days of child care, including 180 days of the school year, Winter Break (5 days), Spring Break (5 days), and summer school (20 days). ELOP-funded programs outside of the regular school year will include all-day care, generally from 8:00 a.m. to 6:00 p.m. All programs will be based on staffing and seat availability.

District-Wide Goals 2025-2026

1. Students will be career/college ready via high-quality instruction
2. Students and Staff will be physically, emotionally, and mentally healthy

Discussion/Issues:

Local educational agencies must operate the Expanded Learning Opportunities Program in accordance with the requirements outlined in California *Education Code* Section 46120, including the development of a program plan. The program plan needs to be approved by the Local Educational Agency's (LEA) Governing Board in a public meeting and posted on the LEA's website.

Fiscal Impact:
ELOP funding comes from the California Department of Education's ELOP Grant allocation of $3,859,529, which was awarded to the District on February 18, 2026.

Recommendation:
Peter Knapik, Assistant Superintendent, Educational Services, recommends that the Board of Education approve the Expanded Learning Opportunities Program Plan effective July 1, 2025, through June 30, 2026, and that authority to sign this agreement be exercised pursuant to BUSD –AR 3314, as presented.

EXPANDED LEARNING OPPORTUNITIES PROGRAM PLAN GUIDE

California Department of Education
1430 N Street, Suite 3400
Sacramento, CA 95814-5901
916-319-0923

Burbank Unified School District
1900 W. Olive Avenue
Burbank, CA 91506-2460

This Program Plan Template Guide is required by California *Education Code* (*EC*) Section 46120(b)(2)

Name of Local Educational Agency and Expanded Learning Opportunities Program Site(s)

Local Educational Agency (LEA) Name: Burbank Unified School District

Contact Name: Laura Flosi

Email: LauraFlosi@burbankusd.org

Contact Phone: 818.729.4482

Instructions: Please list the school sites that your LEA selected to operate the Expanded Learning Opportunities Program (ELO-P). Add additional rows as needed.

1. Disney Elementary
2. Edison Elementary
3. Emerson Elementary
4. Harte Elementary
5. Jefferson Elementary
6. McKinley Elementary
7. Miller Elementary
8. Providencia Elementary
9. Roosevelt Elementary
10. Stevenson Elementary
11. Washington Elementary
12. Luther Burbank Middle School
13. Dolores Huerta Middle School
14. John Muir Middle School

Purpose

This template will assist LEAs in developing a program plan as required by *EC* Section 46120(b)(2). In this program plan, LEAs will describe program activities that support the whole child and students' Social and Emotional Learning (SEL) and development.

Definitions

"Expanded learning" means before school, after school, summer, or intersession learning programs that focus on developing the academic, social, emotional, and physical needs and interests of pupils through hands-on, engaging learning

experiences. It is the intent of the Legislature that expanded learning programs are pupil-centered, results-driven, include community partners, and complement, but do not replicate, learning activities during the regular school day and school year. (*EC* Section 8482.1[a])

"Expanded learning opportunities" has the same meaning as "expanded learning" as defined in *EC* Section 8482.1. "Expanded learning opportunities" do not mean an extension of instructional time, but rather, opportunities to engage pupils in enrichment, play, nutrition, and other developmentally appropriate activities. (*EC* Section 46120[e][1])

Instructions

This Program Plan needs to be approved by the LEA's Governing Board in a public meeting and posted on the LEA's website.

The program plan template guide is considered a living document that is periodically reviewed and adjusted to reflect the community's needs, updates in the law, and to facilitate continuous improvement in the development of an effective ELO-P.

The LEA is responsible for creating, reviewing, and updating the program plan every three years in accordance with *EC* Section 8482.3(g)(1). LEAs are encouraged to work collaboratively with partners and staff to develop and review the program plan. The LEA is responsible for planning and overseeing any community partners or subcontractors. The LEA should include any partners in the development and review of the plan. It is recommended that the plan be reviewed annually.

The Expanded Learning Division adopted the *Quality Standards for Expanded Learning in California* (Quality Standards). It introduced requirements for Continuous Quality Improvement (CQI) to help programs engage in reflection and be intentional about program management practices and activities delivered to students. To create the program plan, provide a narrative description in response to the prompts listed under each Quality Standard below. The LEA may customize and include additional prompts, such as describing SEL activities or refining the plan. In addition to the narrative response, it may be helpful to include tables, charts, or other visual representations that contribute to the understanding of the ELO-P. LEAs are encouraged to download and reference the Quality Standards to provide ongoing improvements to the program. The Quality Standards can be found on the California Department of Education's (CDE) Quality Standards and CQI web page, located at https://www.cde.ca.gov/ls/ex/qualstandcqi.asp.

1—Safe and Supportive Environment

Describe how the program will provide opportunities for students to experience a safe and supportive environment. Include whether the program will be offered on the school site or off-campus. If not on site, describe where in the community it will be located and how students will be supported to access it.

With the leadership of the District administration, school administration, certificated staff, classified staff, and families, the ELO-P environment will follow all health and safety rules provided by the State, County, and District. All policies and procedures of the State of California, California Department of Education, and Burbank Unified School District will be adhered to.

Health, safety, and behavioral policies and procedures of the BUSD will be communicated to staff, students, and families verbally, in writing, and posted on the ELO-P website.

As a condition of enrollment and with access to the school district database, student health and medical needs will be identified. The ELOP program will respond appropriately to those health and medical needs as will the schools in the school district. Staff will be first aid and CPR trained.

In the event of a medical incident, an incident report will be completed and a copy provided to the family. Phone calls will be made to families in an emergency.

Emergency contact information will be maintained in the district database.

The ELO-P will connect with various District departments and community services as needed to provide a safe and supportive learning environment.

Staff are expected to treat all members of the ELOP community with mutual respect in a trusting, nurturing, and supportive environment. Staff are expected to encourage all participants to develop and strengthen skills and interests, resulting in a stronger learning community.

Positive behaviors and accomplishments of staff and students will be recognized. When inappropriate behaviors occur, staff are expected to respond in a calm, nurturing manner, by directly addressing them.

All staff, students, and families are expected to follow all health and safety procedures, trainings, and practice drills, as appropriate.

Staff will be provided with staff shirts or badges. Educational Partners will be required to undergo a thorough background check before working with students.

Snacks will be provided through the Burbank USD Food Services Department.

Attendance procedures will be followed, with strict check-in and check-out procedures similar to those in the ASES program. The District will use Aeries to track student enrollment and attendance and ensure that eligible students can participate in ELOP Programs. Procedures will be in place to ensure that students are always accounted for.

The program design will intentionally address the areas of interest, learning styles, participant strengths, and areas of concern, increasing and expanding the participants' academic and social-emotional learning.

Behavioral guidelines will be set and maintained by staff and participants. The structures of Positive Behavior Intervention and Supports (PBIS) will be followed.

Procedures for fire, earthquake, and lockdowns will be designed, practiced, and followed.

2—Active and Engaged Learning

Describe how the program will provide opportunities for students to experience active and engaged learning that either supports or supplements, but does not duplicate, the instructional day.

The Expanded Learning Program will provide a variety of hands-on, project-based activities in Reading/Language Arts, Mathematics, Science, Social Studies, Art, and Music that result in students advancing their learning, and, at times, culminating projects.

Staff will design lessons that allow students to learn and grow through multiple senses. Activities will be designed to enable students to work in groups with clear roles and purpose. Activities will provide students with opportunities to think critically, discuss, and work collaboratively.

Activities will tap into concepts of equity, diversity, and inclusion.

District assessments will be used to measure growth in RLA and Math.

Participants will use technology to generate ideas and support them with multiple perspectives as part of a critical thinking process.

Students in K through 5 grades have a chance to participate in active, engaging learning through curriculum resources, as well as physical fitness and social-emotional support, provided by enrichment staff and teachers through the District.

In addition to supplementing traditional instruction in fun and creative ways, the Burbank ELOP Program will also provide students with daily emotional and behavioral support through planned activities that promote confidence and self-awareness, as supported by the Collaborative for Academic, Social, and Emotional Learning (CASEL).

Students will experience virtual and on-site field trips and consistent routines that give students a fun summer feel, all while learning.

3—Skill Building

Describe how the program will provide opportunities for students to experience skill-building.

Students will be provided projects and activities that result in a product or demonstration. Some tasks may be individual while others may be group oriented. Activities will include 21st century skills where students will have a sense of personal and social responsibility, an understanding of life, and career options. Activities will be linked to the outside world and problem for critical thinking and problem solving. Technology use will be integrated into many activities and learnings.

Students will participate in daily activities that support Social Emotional Learning (SEL), math and reading in small groups to experience collaborative thinking and building their skill sets together. Group projects, along with individual work books or adventure packs, are part of the summer learning experience to enhance academic gains by almost 2 months in both reading and math. Examples of hands-on learning include engineering and science activities that will help students develop their critical thinking skills and enhance their math concepts and mathematical awareness.

Whole group, small group, and individual activities will be performed.

4—Youth Voice and Leadership

Describe how the program will provide opportunities for students to engage in youth voice and leadership.

The nature of the activities will be designed for students to share their viewpoints, concerns, or interests. Leadership skills will be integrated into many lessons. This will also allow students to critically think, debate, and create steps for actions.

Staff will challenge students so that they may better organize their thoughts and perspectives towards a finished product.

Students, staff, and families will provide opportunities to share their opinions and voice about the content of the program, and asked about expansion of the curricula of the program in the coming years.

Students participating will participate in targeted lessons in two units: Self & Others and Belonging & Community. These components of curriculum give students in grades TK through 6 the chance to explore concepts related to trusting relationships, sharing, and connecting with others. Activities are designed by teachers to allow students the opportunity to explore these concepts at their own pace while learning to listen to the feelings of others while also gaining self and social awareness.

5—Healthy Choices and Behaviors

Describe how the program will provide opportunities for students to engage in healthy choices and behaviors. Describe how students will be served nutritious meals and/or snacks during the ELO-P hours of programming.

All students will receive nutritious lunch and snacks provided by the Burbank Unified School District through their food and nutrition services program. Snacks and lunches provided to all students meet state and federal requirements based on recommended nutritional guidelines.

Students will enjoy meals with their peers and are encouraged to engage in conversation to make meals a positive and healthy experience. At no point is food or snacks used as punishment or bribery. All students, regardless of behavior, will be afforded a safe and healthy space to enjoy a meal with their peers.

Students will be provided lessons and activities surrounding nutrition, healthy choices, and physical activity.

A wellness plan will be designed by staff and families. The overall design of the program will also be shared with students to provide them voice and input opportunities to influence the program design.

6—Diversity, Access, and Equity

Describe how the program is designed to address cultural and linguistic diversity and provide opportunities for all students to experience diversity, access, and equity. Describe how the ELO-P will provide access and opportunity for students with disabilities.

The Burbank Boys and Girls Club program is an all-inclusive and diverse program providing summer educational opportunities to all students grades TK through 6, regardless of development or culture.

The ELOP Program will allow us to provide extra support staff to support students with disabilities: translators, hard of hearing interpreters, behavioral aids, etc., as needed.

The curriculum will be designed to provide teachers resources and support on creating anti-bias environments and learning experiences for students. These experiences are done either through group projects or independently.

Additionally, ELOP staff can provide all participants access to community and area resources which offers staff and families support when addressing sensitive topics or behavior related to diversity, access or equity.

Staff will be sought to better diversify the makeup of the staff. Staff will reflect the diversity related to participants' race, color, religion, sex, age, income level, national origin, physical ability, sexual orientation, and/or gender identity and expression.

Staff will be provided diversity and sensitivity training.

7—Quality Staff

Describe how the program will provide opportunities for students to engage with quality staff.

The program provides staff and volunteers with:

- Clear titles and job descriptions
- Continuous training and professional development
- Resources and materials to deliver activities
- On-the-job coaching
- Cultural, linguistic, and socio-economic diversity

Competitive pay will be required to attract applicants for the various positions.

Staff includes:

Supervisors

Teachers

Instructional assistants

Classrooms are separated by grade, with no more than 20 students per class, one teacher, and one instructional assistant. In addition to classroom teaching staff, the program provides a daily on-site supervisor and a districtwide teacher on special assignment.

All staff work together to give students individual attention and support for their learning. Group activities are scheduled to provide small-group learning opportunities, so students can also offer peer-to-peer support.

All staff in attendance throughout the program are qualified teachers with classroom experience, either provided by the Burbank Unified School District or by other community partners.

8—Clear Vision, Mission, and Purpose

Describe the program's clear vision, mission, and purpose.

When the program creates its mission, vision, goals, and outcomes, it makes sure all stakeholders participate, including:

- Youth
- Families
- Program staff
- School site partners
- Community partners

When the program creates its mission, vision, goals, and outcomes, it makes sure all stakeholders participate, including:

- Youth
- Families
- Program staff
- School site partners
- Community partners

Staff share the program's mission, vision, goals, outcomes, and planned activities with families through a variety of strategies (e.g., new family orientations, parent nights, etc.).

Participants know the goals and outcomes of the program.

Participants provide input that shapes the program's vision, mission, goals, and outcomes.

The ELO Program provides people of all ages with lifelong opportunities to become stronger in spirit, mind, and body. The ELOP strives to close the achievement gap for students, helping them catch up, stay on track, and get ahead in reading and math skills while enjoying summer fun.

The program aims to support students' social-emotional growth, empower educators with key instructional strategies, and engage families in their child's success.

Program communication is essential, so a website and monthly communication are planned.

9—Collaborative Partnerships

Describe the program's collaborative partnerships. Local educational agencies are encouraged to collaborate with non-LEA entities to administer and implement ELO-P programs.

The program develops formalized, clearly articulated partnerships through written agreements and maintains them through ongoing meetings and other communication systems.

The program trains staff to work collaboratively with internal and external stakeholders in order to achieve program goals

Staff engage, communicate, and connect parents to information and services available to them within their community and school.

Staff meet regularly, both formally and informally, with partners to discuss data and agree upon program goals and design.

Staff hold collaborative meetings with both internal and external partners to discuss impact, highlights, and areas of growth

The ELOP Program will be provided through a partnership and agreement with community partners and with the Burbank Unified School District. The program provides learning supports and intervention/prevention to students who attend a Burbank Unified school.

An awareness of academic data will identify students who are reading and mathematically below grade level. The Burbank Unified School District recommends these students to the ELOP Program and works with each individual participant.

10—Continuous Quality Improvement

Describe the program's Continuous Quality Improvement plan.

The program establishes a clearly defined continuous quality improvement process that:

Outlines improvement goals and action steps

Includes a timeline with dates for action steps and quality improvement discussions

Incorporates feedback from staff, youth, parents, and K-12 partners • Describes the information or data needed to assess quality

Clearly describes the responsibilities and roles for each person on the improvement team

The program develops a set of guiding questions related to the program design, desired program outcomes, and impact.

The program creates a plan for how to gather information from multiple sources that will answer the guiding questions and includes:

The type of information for each guiding question

Whom to collect information from

A timeline for collection

The program establishes a clear procedure for obtaining consent to collect information from stakeholders, addressing the purpose of the information and how it will be used.

The program records and tracks the information it collects in a manner that protects stakeholders' confidentiality.

The program shares lessons learned and key outcomes from the quality improvement process with stakeholders and requests their feedback

The ELOP Program uses District assessments before the start of the program and at its conclusion to track student success and program accountability.

Additionally, program staff and families are required to complete a survey at the end of the program. The survey covers outcomes in the following areas: Academics, Professional Development, Social-Emotional Growth, and Family Engagement.

Expanded Learning Opportunities Program

11—Program Management

Describe the plan for program management.

The program creates and annually updates manuals that:

- Address fiscal management, personnel policies, and program operation
- Include clearly defined policies, procedures, practices, and staff/partner roles
- Adhere to federal, state, and local requirements

The program creates and distributes user-friendly parent handbooks that describe policies and procedures, and are available in languages spoken by parents.

The program has a clear organizational structure, which allows staff to focus on the needs of participants, and includes:

- Staff job descriptions
- Lines of supervision
- Information about who to ask for resources
- The percentage of direct service and administrative costs that is allocated for each position

The program has a strong fiscal management system that includes:

- A well-documented budget with line item expenses and the duration and amount of each revenue source
- Enough flexibility for managers at the program and site levels to make allocation decisions as needed throughout the year

The program has the appropriate insurance to protect staff, administrators, volunteers, participants, and parents.

The program maintains written agreements that define the roles and responsibilities of all subcontractors and partners

Program management is organized as follows: The Burbank USD Director of Elementary Education, Child Development Coordinator, and ELOP/ASES Teacher on Special Assignment oversees all youth programming. The ELO Program's direct daily management consists of a site supervisor and a teacher on special assignment. Teaching staff report directly to the site supervisor and teacher on special assignment.

Daily structure is managed by all staff using the curriculum as a guide for daily routines, including student attendance and participation. All staff on-site manage program communications with families and other staff members.

Weekly communication about the program is provided to BUSD and managed directly through the Child Development Coordinator.

Expanded Learning Opportunities Program

General Questions

Existing After School Education and Safety (ASES) and 21st Century Community Learning Centers (21st CCLC) Elementary and Middle School grantees.

ASES, 21st CCLC Elementary/Middle School, and the ELO-P should be considered a single, comprehensive program. In coordinating all these funding streams to move towards a single program, the expectation is that the most stringent requirements will be adopted for program guidance. If one or both grants are held, please describe how the ELO-P funding will be used to create one comprehensive and universal Expanded Learning Program.

Funds for the ELOP and ASES programs will be coordinated to provide services for the comprehensive program. Staffing and program resources will be budgeted for both program. The current ASES program will be maintained at the four funded sites. The additional sites will be funded by the ELO Program.

Expanded Learning Opportunities Program

Transitional Kindergarten and Kindergarten

Programs serving transitional kindergarten or kindergarten pupils shall maintain a pupil-to-staff member ratio of no more than 10 to 1. (*EC* Section 46120[b][2][D]). Please address the proposed schedule and plan for recruiting and preparing staff to work in the program, including supporting them to understand how to work with younger children.
How will the lower pupil-to-staff ratio be maintained? How will the curriculum and program be developmentally-informed to address this younger age group?

Type of Requirement	2021–22	2022–23	2023–24	2024–25	2025–26
Eligibility	Turn five between September 2 and December 2; at district discretion, turn five between December 3 and the end of the school year	Turn five between September 2 and February 2; at district discretion, turn five between February 3 and the end of the school year	Turn five between September 2 and April 2; at district discretion, turn five between April 3 and the end of the school year	Turn five between September 2 and June 2; at district discretion, turn five between June 3 and the end of the school year	Turn four by September 1
Ratios	Not specified	1:12	1:10**	1:10**	1:10**
Class Size	24	24	24	24	24

Curriculum and professional learning for staff for younger participants will include:

. Effective adult-child interactions

i. Children's literacy and language development aligned with the *California Preschool Learning Foundations* and the *California Preschool Curriculum Frameworks*

ii. Children's development of math and science concepts and skills aligned with the *California Preschool Learning Foundations* and the *California Preschool Curriculum Frameworks*

iii. Children's social-emotional development aligned with the *California Preschool Learning Foundations* and the *California Preschool Curriculum Frameworks*

iv. Implicit bias and culturally- and linguistically-responsive practices

v. Adverse Childhood Experiences (ACEs) and trauma- and healing-informed practice

vi. Curriculum selection and implementation

vii. Creating developmentally-informed environments

viii. Administration and use of child assessments to inform instruction

ix. Support for multilingual learners, including home language development and strategies for a bilingual classroom

x. Serving children with disabilities in inclusive settings, including Universal Design for Learning

xi. Engaging culturally- and linguistically diverse families

Sample Program Schedule

Please submit a sample program schedule that describes how the ELO-P or other fund sources, including the California State Preschool Program for children enrolled in transitional kindergarten or kindergarten, will be combined with the instructional day to create a minimum of nine hours per day of programming (instructional day plus ELO-P or other supports). Additionally, please submit a sample schedule for a minimum of nine hours of a summer or intersession day.

a. CSPP

1. Morning child care 7:00 am - 8:30 am
2. Instructional day 8:30 am - 1:30 pm
3. After-school child care 1:30 pm - 6:00 pm

b. Transitional Kindergarten

1. Morning child care 7:00 am - 8:30 am
2. Instructional day 8:30 am - 1:30 pm
3. After-school child care 1:30 pm - 6:00 pm

c. Kindergarten through Grade 5

4. Morning child care 7:00 am - 8:30 am
5. Instructional day 8:30 am - 2:30 pm
6. After-school child care 2:30 pm - 6:00 pm

c. Grade 6

1. Instructional day 8:30 am - 3:00 pm
2. After-school child care 3:00 pm - 6:00 pm

Expanded Learning Opportunities Program

Below are additional legal requirements for the ELO-P. Please ensure your Program Plan meets all of these legal requirements:

***EC* Section 46120(b)(2):**

> [LEAs] operating expanded learning opportunities programs may operate a before-school component of a program, an after-school component of a program, or both the before and after-school components of a program, on one or multiple school sites, and shall comply with subdivisions (c), (d), and (g) of Section 8482.3, including the development of a program plan based on the following;
>
> (2) [LEAs] operating expanded learning opportunity programs pursuant to this section may operate a before school component of a program, an after school component of a program, or both the before and after school components of a program, on one or multiple school sites, and shall comply with subdivisions (c), (d), and (g) of Section 8482.3, including the development of a program plan based on all of the following:
>
> (A) The department's guidance.
>
> (B) Section 8482.6.
>
> (C) Paragraphs (1) to (9), inclusive, and paragraph (12) of subdivision (c) of Section 8483.3.
>
> (D) Section 8483.4, except that programs serving transitional kindergarten or kindergarten pupils shall maintain a pupil-to-staff member ratio of no more than 10 to 1.

***EC* Section 46120(b)(1)(A):**

> On schooldays, as described in Section 46100 and Sections 46110 to 46119, inclusive, and days on which school is taught for the purpose of meeting the 175-instructional-day offering as described in Section 11960 of Title 5 of the California Code of Regulations, in-person before or after school expanded learning opportunities that, when added to daily instructional minutes, are no less than nine hours of combined instructional time and expanded learning opportunities per instructional day.

***EC* Section 46120(b)(1)(B):**

> For at least 30 non school days, during inter-sessional periods, no less than nine hours of in-person expanded learning opportunities per day.

Expanded Learning Opportunities Program

***EC* Section 46120(b)(3):**

> [LEAs] shall prioritize services provided pursuant to this section at school sites in the lowest income communities, as determined by prior year percentages of pupils eligible for free and reduced-price meals while maximizing the number of schools and neighborhoods with expanded learning opportunities programs across their attendance area.

***EC* Section 46120(b)(4):**

> [LEAs] may serve all pupils, including elementary, middle, and secondary school pupils, in expanded learning opportunity programs provided pursuant to this section.

***EC* Section 46120(b)(6):**

> [LEAs] are encouraged to collaborate with community-based organizations and childcare providers, especially those participating in state or federally subsidized childcare programs, to maximize the number of expanded learning opportunities programs offered across their attendance areas.

***EC* Section 46120(c):**

> A [LEA] shall be subject to the audit conducted pursuant to Section 41020 to determine compliance with subdivision (b).

***EC* Section 8482.3(d):**

> [LEAs] shall agree that snacks made available through a program shall conform to the nutrition standards in Article 2.5 (commencing with Section 49430) of Chapter 9 of Part 27 of Division 4 of Title 2.
>
> [LEAs] shall agree that meals made available through a program shall conform to the nutrition standards of the United States Department of Agriculture's at-risk afterschool meal component of the Child and Adult Care Food Program (42 United States Code [U.S.C.] Section 1766).

***EC* Section 8482.6:**

> Every pupil attending a school operating a program . . . is eligible to participate in the program, subject to program capacity. A program established . . . may charge family fees. Programs that charge family fees shall waive the cost of these fees for pupils who are eligible for free or reduced-price meals, for a child that is a homeless youth, as defined by the federal McKinney-Vento Homeless Assistance Act (42 U.S.C. Section 11434a), or for a child who the program knows is in foster care. A program

that charges family fees shall schedule fees on a sliding scale that considers family income and ability to pay.

***EC* sections 8483.4 and 46120(b)(2)(D):**

The administrator of every program established pursuant to this article shall establish minimum qualifications for each staff position that, at a minimum, ensure that all staff members who directly supervise pupils meet the minimum qualifications for an instructional aide, pursuant to the policies of the school district. Selection of the program site supervisors shall be subject to the approval of the school site principal. The administrator shall also ensure that the program maintains a pupil-to-staff member ratio of no more than 20 to 1. All program staff and volunteers shall be subject to the health screening and fingerprint clearance requirements in current law and district policy for school personnel and volunteers in the school district, except that programs serving transitional kindergarten or kindergarten pupils shall maintain a pupil-to-staff member ratio of no more than 10 to 1.

***EC* Section 8482.3(c)(1)(A–B):**

Each component of a program established pursuant to this article shall consist of the following two elements:

(A) An educational and literacy element in which tutoring or homework assistance is provided in one or more of the following areas: language arts, mathematics, history and social science, computer training, or science.

(B) An educational enrichment element that may include, but need not be limited to, fine arts, career technical education, recreation, physical fitness, and prevention activities.

Burbank Unified School District
Instructional Services

REPORT TO THE BOARD

TO:	Members of the Board of Education
FROM:	Peter Knapik, Assistant Superintendent of Educational Services
PREPARED BY:	Peter Knapik, Assistant Superintendent of Educational Services
SUBMITTED BY:	Glenda Diaz Nolasco, Administrative Secretary II
DATE:	May 7, 2026
SUBJECT:	Approval of Contract with Engaging Hearts & Minds for Summer School Expanded Learning Opportunities Program (ELOP)

Background:
The Expanded Learning Opportunities Program (ELOP) funds after-school and summer enrichment programs for transitional kindergarten through sixth grade.

"Expanded learning" refers to before-school, after-school, summer, or intersession programs that focus on developing pupils' academic, social, emotional, and physical needs and interests through hands-on, engaging learning experiences.

To support high-quality, standards-aligned enrichment and academic programming during the summer session, the district seeks approval to enter into a contract with Engaging Hearts & Minds, a California-based nonprofit organization, to provide curriculum and instructional supports for the Summer School Expanded Learning Opportunities Program (ELOP). The ELOP summer program is designed to provide extended learning time and enrichment opportunities that support academic growth, student engagement, and whole-child development.

District-Wide Goals 2025-26:
1. Students will be career/college ready via high-quality instruction
2. Students will be physically, emotionally, and mentally healthy

Discussion/Issues:
The Engaging Hearts & Minds program provides comprehensive, standards-aligned summer school curriculum in English Language Arts (ELA), Spanish Language Arts, and Mathematics. Services include training for teachers to implement curriculum and virtual support for teachers.

Instructional materials provided through this contract include curriculum maps, detailed lesson plans, instructional slides, student workbooks, and built-in assessment tools. In addition, Engaging Hearts & Minds provides an assessment and evaluation report to support program reflection, instructional improvement, and effectiveness monitoring.

The curriculum emphasizes culturally responsive, engaging, and student-centered learning experiences that support academic skill development while promoting collaboration, creativity, and student voice. Use of this curriculum will ensure instructional consistency across ELOP summer sites and aligns with district priorities related to equity, access, and high-quality expanded learning programming.

Fiscal Impact:
The cost of the contract with Engaging Hearts & Minds is $33,680. Funding for this contract will be provided through Expanded Learning Opportunities Program (ELOP) funds.

Recommendation:
Peter Knapik, Assistant Superintendent of Educational Services, recommends that the Board of Education approve the agreement with Engaging Hearts & Minds for the Summer School Expanded Learning Opportunities Program (ELOP) curriculum and services, for a total amount not to exceed $33,680 (01.0-26000.0-11100-10000-4250-548-0000), effective May 1, 2026 through August 30, 2026, and that authority to sign the agreement be exercised pursuant to BUSD-AR 3314, as presented.

Here is a link for more information on this organization: https://www.engagingheartsandminds.org/about

ENGAGING
HEARTS & MINDS

CONSULTANT EDUCATIONAL SERVICES AGREEMENT

This Consultant Education Services Agreement, effective this 1st of May, 2026 (the "Agreement"), is entered into by and between the **Engaging Hearts and Minds** (the Provider), a California non-profit corporation (Federal Tax I.D. 39-2212281) located at Post Office Box 310, 29700 Woodford-Tehachapi Road, Keene, CA 93531 (hereinafter "EHM"), and **Burbank Unified School District** with respect to the following facts and set forth in Exhibit "A" of this Agreement:

Section 1.1 Purpose. By this Agreement, the Parties desire to set forth the terms and conditions upon which Provider shall provide, and Burbank Unified School District shall compensate Provider for, the performance of Provider's obligations under this Agreement, and set forth the Parties' rights and obligations relating to this Agreement.

Section 1.2 Disclaimer of Warranties. Burbank Unified School District understands and acknowledges that the Services provided by Provider through this Agreement are part of a pilot program developed by Provider. As such, Provider disclaims all express, implied representations, warranties, and guarantees with regards to the Services, including but not limited to representations or warranties of the quality of the Services or results generated by the Services.

Additionally, Burbank Unified School District hereby agrees to ensure that all Burbank Unified School District agents, officers, and employees will implement the Services with fidelity and according to instructions outlined in Exhibit A.

Section 1.3 Provider Qualification. Provider represents that it and all persons whom it employs or retains to perform this Agreement have the necessary training, skill, and experience, and are qualified to so perform, including having throughout the Agreement Term all required licenses, permits, and/or certifications (collectively and separately "License").

Section 1.4 Work Products and Right Thereto. Unless stated otherwise in this Agreement or in Exhibit A, this Section shall survive the termination of this Agreement and apply to A) any work and/or documentation that Burbank Unified School District provides to Provider pursuant to or relating to this Agreement ("Burbank Unified School District's Work"); and B) any work and/or documentation that is prepared by Provider pursuant to or relating to this Agreement ("Provider Work") The following applies to the school's work: a) the Burbank Unified School District's Work is the property of the Burbank Unified School District and the Burbank Unified School District has all interests and rights thereto; b) Provider does not own and shall not claim any interest or right to or in the Burbank Unified School District's Work; c) the Burbank Unified School District grants to Provider a license during the Contract Term to use and reproduce the school's work necessary for Provider to perform this Agreement, and d) Provider shall return any or all of the school's work upon the school's request.

The following applies to the Provider's Work: a) Provider represents that the Provider Work is Provider's original work and does not contain any unlawful matter or infringe upon any Third Party's copyright, right, or interest. For the purpose of this Agreement, "Work" means any data, document, display, drawing, report, material, invention, work, discovery including any copyright, right, and interest therein or thereto and whether

written, recorded, or electronically store, and shall include source codes and other codes and information if this Agreement requires Provider to prepare, create, modify, update, or perform work relating to any website, webpage, and/or the computer software, program, or product.

Section 1.5 Confidential Material. If any documents and/or information (for example and not as a limitation employee or student records) that are subject to nondisclosure or protection under federal and/or state laws (collectively and separately "Confidential Material") are provided to or created by the Parties pursuant to this Agreement, the Parties shall: a) not release, disseminate, publish, or disclose the Confidential Material, except as required by law or court order or as this Agreement may permit or if the Confidential Material was already known by one of the Parties; b) unless specifically permitted by Applicable Law, not use the Confidential Material for any purpose not related to Provider's performance of this Agreement; and c) protect and secure the Confidential Material, including Confidential Material saved or stored in an electronic form, to ensure that it is safe from theft, loss, destruction, erasure, alteration, and unauthorized viewing, duplication, and use.

Section 1.6 Record Retention and Inspection. Provider shall maintain accurate records of Services provided under this Agreement, amounts billed pursuant to the Agreement, and all documents required of Provider under this Agreement for the duration of at least two years after the date on which this Agreement terminates and make them available, upon the Burbank Unified School District's request, for review, audit, and/or copying by the Burbank Unified School District. Upon thirty (30) day written notice by Burbank Unified School District to Provider that a longer retention period is necessary in order for Burbank Unified School District to comply with records retention requirements under federal or state laws or funding requirements, Provider shall continue to retain such books and records for the period stated in the Burbank Unified School District's written notice.

Section 1.7 Access to Student Data. The Burbank Unified School District shall provide a means by which an authorized agent of the Provider can search and export student data from Burbank Unified School District's database through reasonable procedures so that the Provider can fully perform the terms set forth under this Agreement through the duration of the Agreement.

Section 1.8 Compliance With Applicable Laws. Each party agrees to comply with all federal, state, and local laws, including without limitation, applicable health, safety, and civil rights laws, rules, regulations, and ordinances.

Section 2 Payment

Section 2.1 Contract Amount: As full consideration and compensation for Provider's performance of this Agreement, Burbank Unified shall pay Provider the Contract Amount not to exceed $33,680**.** The total cost for these services will be $33,680, to be invoiced after July 3rd in the amount of $33,680. BUSD will process payment within 30 days of receipt of invoice. Payment will be processed only after services are rendered."

Section 2.2 Invoicing and Payments. Provider shall submit to District an invoice no later than the 15th day of the month immediately following the last day of the period for which Provider requests payment. Provider

the event District requires additional information to approve and/or process any invoice submitted by Provider, the District shall notify Provider in writing that it requires additional information to process payment of an
invoice.

Section 2.3 Late Fee Payment. District shall be liable for late payments, which are defined as any amounts owed by District that are not received by Provider on the due date. All late payments shall incur a late fee of 3% of the invoice amount, per month. If the District has any unpaid invoices overdue by more than fifteen days (15) days, the District will be notified that Provider has the right to suspend the Services. Failure by District to pay any invoice within thirty (30) days of the due date may result in account termination by Provider without further notice to Client. Termination of the Agreement pursuant to this late payment policy does not release the District from liability for any amount due at the time of termination. The District represents and warrants that it shall reimburse Provider for all its collection costs, including attorneys' fees, collection fees and court costs.

Section 3 Term and Termination of Agreement

Section 3.1 Contract Term. This Agreement is effective on the Effective Date and continues in full force and effect thereafter until and including the Termination Date set forth in Exhibit A and any written extension thereto ("Contract Termination Date") and unless terminated during the Contract Term in accordance with Section 3.2 below, shall terminate at 12:00 a.m. midnight on the last day of the Contract Term without any notice or action by either Party.

Section 3.2 Termination During Contract Term. Either Party may terminate this Agreement upon the other Party's material breach of one or more provisions of this Agreement and after the non-breaching Party has given the breaching Party a fifteen (15) day written Notice to Cure Default. The Parties may also terminate this Agreement without cause by giving the other Party a ten (10) day Notice to Terminate Agreement.

Section 3.3 Rights and Obligations Upon Termination. Upon termination of this Agreement during the Contract Term, Burbank Unified School District shall pay Provider for the services that Provider was required to perform and has performed in accordance with this Agreement before the effective date of termination. Provider shall submit an invoice to Burbank Unified School District within 30 (thirty) days of the effective date of Termination.

Section 3.4 Force Majeure. A party is not liable for failing to perform or delaying the performance of this Agreement due to events that are beyond the Party's reasonable control and occurring without its fault or negligence, for example, acts of God such as tornadoes, lighting, earthquakes, hurricanes, floods, or other natural disasters (collectively "Force Majeure"), provided that the Party has promptly notified the other Party in writing of the occurrence of the Force Majeure, except that a Force Majeure shall not excuse the Burbank Unified School District payment to Provider of any portion of the Contract Amount that is due to Provider where Provider has performed any services pursuant to the Agreement.

The Following are only applicable to fully managed programs by EHM:

Section 4 Insurance

Section 4.1 Required Insurance. Provider, at its cost, shall maintain in effect insurance that complies with the applicable requirements set forth below.

Section 4.2 Commercial General Liability. During the Contract Term, Provider shall maintain coverage for property damage, bodily injury, and personal injury of not less than $1,000,000.00 per occurrence and $2,000,000.00 general aggregate.

Section 4.3. Worker's Compensation. During the Contract Term, Provider shall maintain Employer's Liability Insurance with a limit of not less than $1,000,000.00 per accident.

Section 4.4. Proof of Insurance. Upon written request of Burbank Unified School District, Provider shall provide Burbank Unified School District with written proof of the insurance required of Provider under this Agreement by submitting a copy of Provider's insurance policy and/or any other evidence of insurance satisfactory to the Burbank Unified School District.

Section 4.5. Additional Insured. During the Contract Term, Provider shall name Burbank Unified School District, its officers, employees, attorneys, and designated volunteers as additional insureds on the policy(ies) with respect to liabilities arising out of Provider's performance of services under this Agreement.

Section 4.6. Waiver of Subrogation. Any insurance policies maintained by Provider pursuant to this Agreement shall contain an endorsement waiving the Provider's right of subrogation against Burbank Unified School District.

Section 5.1 Indemnity. Each Party agrees to defend, indemnify, and hold harmless the other Party, its board of directors, officers, agents, and employees harmless from and against any liability, loss, expenses (including attorney's fees), or claims of injuries or damages arising out of the performance of the terms of this Agreement but only in proportion to and to the extent such liability, loss, expense, attorney's fees, or claims for injury or damages are caused by or result from negligent or intentional acts or omissions of the indemnifying party and/or its officers, agents and/or employees.

A party who intends to seek or seeks indemnity and/or hold harmless for any Loss from the indemnifying party shall notify the other party in writing and within a reasonable time after the Party knows or becomes aware of any Claim that may or will result in a Loss, describing, if known or determinable, the pertinent circumstances, all entities, and persons involved, and the amount of being claimed. "Claim" means any claim, demand, lawsuit, cause of action, cross-complaint, cross-action, and/or proceeding arising out or resulting from, or relating to this Agreement. "Loss" means any bodily injury, property damage, personal

injury, advertising injury, liability, loss, damage, judgment, or expense arising out of, resulting from, or relating to this Agreement.

Section 6.1 Dispute Resolution. The Parties shall meet and confer in good faith to resolve any dispute between them arising out of, resulting from, or relating to this Agreement, including any Claim or Loss for which a Party seeks indemnity pursuant to Section 5.1 of this Agreement. During a dispute regarding payment under this Agreement, Burbank Unified School District shall pay Provider the amount that is undisputed and due to Provider. A party shall not commence any cause of action, action, lawsuit, or proceeding arising out of, resulting from, or relating to this Agreement until after the Party has complied with the provisions of this Section.

Section 7 General Provisions

Section 7.1 Entire Agreement. This Agreement states the entire agreement between the Parties with respect to its subject matter and supersedes any previous and contemporaneous or oral representations, statements, negotiations, or agreements.

Section 7.2 Modifications and Amendments. This Agreement may be amended or modified at any time by written mutual agreement of the authorized representatives of the Parties to this Agreement.

Section 7.3 Waiver. A waiver by any signatory to this Agreement of any breach of any provision to this Agreement or warranty of representation set forth herein shall not be construed as a waiver of any subsequent breach of the same or any other provision. The failure to exercise any right under this Agreement shall not operate as a waiver of such right. All rights and remedies provided for in this MOU are cumulative.

Section 7.4. Governing Law and Venue. This Agreement between the Parties shall be governed by and construed according to California law. Any action to enforce this Agreement shall be brought in the appropriate court having jurisdiction over matters arising in Los Angeles County, California.

Section 7.5. Severability. If any provision of this Agreement is held to be illegal, invalid, or unenforceable under present or future laws effective during the term of this Agreement, such provision shall be fully severable. This Agreement shall remain in full force and effect unaffected by such severance, provided that the severed provision(s) are not material to the overall purpose and operation of this Agreement.

Section 7.6 Assignment. The Parties shall not assign their rights, duties, or obligations under this Agreement, either in whole or in part, without the prior written consent of the other signatories to this Agreement.

Section 7.7 Independent Contractor. The Provider is an independent contractor, and it and its directors, officers, employees, and agents are not, and shall not represent themselves as directors, officers,

employees, or agents of Burbank Unified School District. This Agreement does not and shall not be construed to create an employment or agency relationship, partnership, or joint venture between the Parties.

Section 7.8 Notices All notices, requests, consents, approvals, waivers, demands, and other communications required or permitted to be given or made under this Agreement shall be in writing and shall be deemed delivered to the relevant Party (a) on the date of personal delivery against a written receipt, or (b) on the date sent by confirmed telephonic facsimile transmission, or (c) on the first business day following the date or delivery to a nationally recognized overnight courier service, or (d) on the third business day following the date of deposit in the United States Mail, postage prepaid, by certified mail, in each case addressed as follows, or to such other address, person or entity as either Party may designate by notice to the other in accordance herewith:

To Provider:
Engaging Hearts and Minds
Attn: Sarah Grams
555 N. Broadway Unit B103
Los Angeles, CA 90012

To Burbank Unified School District School:
Burbank Unified School District
Attn: Jennifer Goldenberg
1900 W. Olive Ave.
Burbank, CA 91506

IN WITNESS WHEREOF, the Parties hereto have executed this Agreement as evidenced by the signatures below of their respective duly authorized representatives.

Engaging Hearts and Minds

By: _____

Printed Name & Title: _____

School: Burbank Unified School District

By: _____

Printed Name & Title: _____

ENGAGING HEARTS & MINDS

Exhibit A:

Description of Deliverables & Services

1. **TERM:** The term of this Agreement shall be from **May 1st, 2026 to August 30th, 2026**

2. **SERVICES:** PROVIDER shall provide full curriculum materials and training for the Summer Learning Program.

Snapshot of Burbank USD Summer Language Arts Program: 5weeks/20 days

- Dates: June 8-July 9 Monday -Thursday
  - No instruction - Jun 19, 2026 and Fridays
- 842 students
  - # Students for Math - 842
  - # Students for ELA - 642 - Summer Version 3
  - # Students for SLA - 200 - Summer Version 2

Programs & Services	*Description*	*Components*

ELA Summer Curriculum & Training for grades TK – 5th
 	
Spanish LA Summer Curriculum & Training for grades TK – 5th
	Literacy and art program for grades TK – 5th	*Curriculum & Training Includes*
		• *Virtual training (90 - 120 min)*
		• *Curriculum Map, Lesson Plans & Slides*
		• *Student Workbook* (printed by site)
		• *Assessments* and *Evaluation Report*
		• *Virtual Support (Complimentary)*
		  ○ *Up to 90 total minutes for up to 25 teachers*
		  ○ *RE: Office Hours, Lesson Prep, Lesson Debrief, Student Work Analysis, Review of Scope and Sequence*

Math Summer Curriculum & Training TK - 5th	*Cognitive Guided Curriculum with real-world applications and career exploration and Training TK - 5th*	*Curriculum & Training Includes*
		• *Virtual training (90 - 120 min)*
		• *Curriculum Map, Lesson Plans & Slides*
		• *Student Workbook* (printed by site)
		• *Assessments* and *Evaluation Report*
		• *Virtual Support (Complimentary)*
		  ○ *Up to 90 total minutes for up to 25 teachers*
		  ○ *RE: Office Hours, Lesson Prep, Lesson Debrief, Student Work Analysis, Review of Scope and Sequence*

ENGAGING
HEARTS & MINDS

Partnership Costs:

Programs & Services	*Cost Per Student / Session*	*Number of Students / Sessions*	*Total Cost*
Shared Roots - ELA Curriculum & Training for grades TK – 5th	*$20 / student*	**642*	*$12,840*
Shared Roots - Spanish LA Curriculum & Training for grades TK – 5th	*$20 / student*	***200*	*$4,000*
Shared Roots - Math Curriculum & Training TK - 5th	*$20 / student*	*842*	*$16,840*
		GRAND TOTAL	**$33,680**

Grade Levels	Site - Miller * Curriculum in English (only)		Site - Jefferson * Curriculum in English (only)		Site - Stevenson * Curriculum in English (only)	
	# Teachers	# Students	# Teachers	# Students	# Teachers	# Students
TK-K	3	72	3	72	3	72
1-2	4	72	4	72	4	72
3-5	5	96	5	96	5	96
TOTAL	12	240	12	240	12	240

Grade Levels	Site - McKinley ** Curriculum in Spanish (only)	
	# Teachers	# Students
K	2	51
1-2	1	41
3-5	2	36
TOTAL	5	128

BOOKS & ART MATERIALS: Hardcopy Text Books/Student Workbooks & Art Materials are not included in the partnership cost and are at district expense to allow the district to leverage inventory on hand. Below is an estimated cost breakdown that the district would purchase.

Programs & Services	*Cost Per Classroom / Student*	*Number of Classrooms / Students*	*Total Cost*
ELA & SPLA Summer Books TK - 5th	*$185 per classroom estimated (1 set per classroom) Must be purchased by district.	42 classrooms	$7770
ELA & SPLA Summer Art Supplies TK - 5th	*$70 per classroom estimated Must be purchased by district.	42 classrooms	$2940
Math Supplies (TK - 5th)	$90 per Classroom estimated Must be purchased by district.	42 classrooms	$3780
GRAND TOTAL			**Up to ~ $14,490**

**This is the average cost of books and art materials in a 5-week program assuming the district wants physical copies of books and has no art materials. We can also provide a list of digital text books (to be printed by district) at no additional cost. If the District prefers EHM to manage the fulfillment and cost of books and supplies, the district must notify EHM 45 days prior to program start date and orders must be placed a minimum of 30 days prior to program start date. This service incur a 30% shipping & handling fee.*

Burbank Unified School District
Instructional Services

REPORT TO THE BOARD

TO:	Members of the Board of Education
FROM:	Peter Knapik, Assistant Superintendent of Educational Services
PREPARED BY:	Peter Knapik, Assistant Superintendent of Educational Services
SUBMITTED BY:	Laura Erisman, Administrative Secretary
DATE:	May 7, 2026
SUBJECT:	Approval of Agreement with Family Service Agency of Burbank to Provide School-Based Counseling Services in 2026-2027

Background:

The Family Service Agency of Burbank (FSA) provides counseling services to members of the Burbank community. FSA has also been providing group and individual counseling services to students at all elementary and secondary schools in Burbank. Most of these programs have been supported by funding from the City of Burbank and FSA, and school staff has reported very positive results. FSA began to expand counseling services to include elementary schools in 2007 starting with Providencia Elementary. For the past several years, FSA has been providing these services to all elementary, secondary schools, and on alternative campuses.

During the 2015/2016 school year, Family Service Agency of Burbank (FSA) opened an on-site Wellness Center at Burbank High School (BHS). An additional on-site Wellness Center was opened at John Burroughs High School (JBHS) in the spring of 2017. These Wellness Centers were opened because of an identified need to offer students a tranquil and supportive respite to collect their thoughts and share their feelings in an environment staffed with therapists from FSA. Since opening, the programs at both schools have served hundreds of students and have become a valuable resource for the District. After the 2017-2019 school year, the name, "Wellness Center" at each comprehensive high school was changed to "Student Care Center."

District Wide Goals for 2025-2026:

1.0 Students will be career/college ready via high-quality instruction
2.0 Students and Staff will be physically, emotionally and mentally healthy.

Discussion and Issues:
In 2024-2025, The Burbank City Council recommended that the City of Burbank continue to fund the counseling services provided by FSA needed at all schools in the Burbank Unified School District. The City of Burbank has agreed to provide $245,000 for this program. Additional funding was provided by Family Service Agency to support these services, as well as $142,000 from the District LCAP Supplemental funds.

FSA staff will meet with students during the school day as resources allow. Students will receive group counseling and/or individual counseling referrals to be made by a school counselor, psychologist, teacher, assistant principal, principal or parent. Students will be eligible for counseling services when their parents or guardians have signed Informed Consent and Release of Information forms. The overall goal will be to promote skills that build resilience and improve the student's ability to succeed.

Fiscal Impact:

The contract period will be effective July 1, 2026 through June 30, 2027. The District will contribute $142,000 LCAP supplemental Funds to support these counseling services provided by FSA.

Recommendation:

Peter Knapik, Assistant Superintendent of Educational Services, recommends that the Board of Education approve the agreement between the Burbank Unified School District and the Family Service Agency of Burbank, to provide individual and group counseling to elementary and secondary school pupils, as required, effective July 1, 2026 through June 30, 2027, not to exceed $142,000 (010-01500.0-71500-31100-5810-7420000) LCAP supplemental funds, and that the authority to sign the agreement be exercised pursuant to BUSD -AR 3314, as presented.

Family Service Agency of Burbank

ELEMENTARY, MIDDLE & HIGH SCHOOL AGREEMENT 2026-27.

The Burbank Community Youth Mental Health CARE Program

at Burbank Unified School District.

This agreement made and entered into this first day of July 2026 between Burbank Unified School District, hereinafter referred to as "District", and Family Service Agency of Burbank, hereinafter referred to as "BurbankFSA" for the purpose of providing mental health services on "District" School campuses as allowed by program design and resources.

PROGRAM DESCRIPTION

Mission and Scope of Services

The Burbank Community Youth Mental Health CARE Program (CYMH-CARE Program) is dedicated to protecting youth from adversity, fostering socio-emotional learning, and promoting psychological well-being within the "District" campuses and the Burbank community. The program ensures that young people have access to high-quality, community-based health care, which is critical for their overall healthy development and well-being.

Partnership History

Established in 2002, a collaborative partnership was created between the "District," the City of Burbank, and "BurbankFSA." This partnership has since grown to provide both individual and group counseling services to students across a variety of school settings.

Schools Served

- 11 Elementary Schools
- 3 Middle Schools
- 2 High Schools
- 1 Alternative School
- 1 Adult School

In addition to these campuses, services are also extended to students enrolled in the "District's" Independent Learning Academy.

Focus of Therapeutic Services

The CYMH-CARE Program provides individual and group sessions that address a variety of issues, including depression, anxiety, self-harm, isolation and alienation, substance abuse, all forms of violence, relationship concerns (both peer and family), and emotional regulation.

Collaboration for Student Well-Being

Through this partnership, the “District” and “BurbankFSA” leadership agree to collaborate closely on matters related to student mental health. Both organizations prioritize the well-

being of students by coordinating efforts to address their needs. This approach fosters a supportive environment where students' mental health and wellness remain at the forefront of program planning and implementation.

ACCESSING CARE

Referral and Assessment Process

Access to the BYMH-CARE Program is initiated when school staff—such as a principal, psychologist, counselor, or teacher—refer a student for services. After the referral packet is submitted by the District, a "BurbankFSA" Director, together with the student's parent or guardian, conducts an assessment to determine the student's needs. Upon completion of this assessment, a "BurbankFSA" therapist is assigned to the student to provide weekly care/treatment. The entire process, from referral submission to the start of therapy, typically takes about three weeks.

Throughout the process, several challenges may arise. These include difficulties accessing suitable facilities, coordinating schedules among staff, students, and school sites, and parent/guardian engagement.

Referral Status Reporting

"BurbankFSA" leadership maintains and shares a confidential Referral Status Report with the District designee using a Google Doc platform, facilitating ongoing communication and transparency throughout the referral process.

Special Considerations for Students with IEP or 504 Plans

When a student who has an Individualized Education Program (IEP) or a 504 plan is referred to the BYMH-CARE Program, District staff are responsible for providing a copy of the student's plan to the BYMH-CARE Program Director prior to scheduling the assessment. This step ensures that all necessary accommodations and supports are considered during the program's intake and evaluation process. It is understood that the BYMH-CARE Program, as provided by "BurbankFSA" on school campuses, does not replace the specialized services offered through "BurbankFSA's" SPED Mental Health Program.

Costs and Additional Resources

In support of the BYMH-CARE Program's youth services, "BurbankFSA" conducts two annual fundraisers. These events help generate financial resources to sustain the partnership and its activities both on school campuses. Additionally, the City of Burbank has a 24-year history of granting to "BurbankFSA" funds in support of the BYMH-CARE Program services.

The design and capacity of the BYMH-CARE Program, as well as its ability to enroll students and provide care, are directly determined by the resources available to the program. This means that the scope of services and the number of students who can participate depend on the funding and support that can be secured.

PROGRAM SCOPE AND IMPACT

The BYMH-CARE Program is expected to provide the “District” with a minimum of 6,000 units of direct clinical care each year, supporting a minimum of 450 youth across identified elementary, middle, and high schools. The positive effects of the program will extend beyond the students who receive direct services, benefiting their classmates, teachers, families, neighborhoods, and the wider Burbank community.

Students will participate in the BYMH-CARE Program at scheduled intervals. While the primary focus remains on meeting the needs of the youth, parental involvement will be included as needed during and after school hours, as indicated, to reinforce and support each student’s therapeutic process.

Continuing with the tradition established by the partnership, “BurbankFSA” will also continue to respond to unanticipated critical needs identified by the “District” that may not be specifically outlined in this agreement, provided that adequate resources are available.

Program Location

The “District” services will typically be delivered directly on school campuses, ensuring accessibility for students and supporting their educational environment. In rare situations where clinical needs require a different setting, an alternative location may be considered. This decision will be made collaboratively between "BurbankFSA" and the student’s parent(s) or guardian(s), ensuring that any change in location or modality (telehealth) is in the best interest of the student and agreed upon by all parties.

The "District" will work closely with “BurbankFSA” to identify and set up appropriate therapeutic spaces for both individual and group CARE sessions within the program. This collaboration helps ensure that students have access to environments that foster their well-being and support their participation in the therapeutic process.

Dates of Implementation and Completion

The program is scheduled to operate in accordance with the established school calendar, ensuring alignment with the academic schedule and school-based activities.

Staffing

The program employs the necessary clinical, educational, and administrative personnel to effectively fulfill the scope of work and ensure the delivery of quality services.

“BurbankFSA” is highly regarded as a leading mental health training site in the region, operating with a commitment to excellence comparable to that of a distinguished teaching hospital. Each year, "BurbankFSA" supports the professional development of approximately 45 graduate students pursuing master's and/or doctoral-level degrees through a comprehensive training program.

The "BurbankFSA" team consists of a diverse group of highly skilled licensed clinicians, as well as individuals who are working toward clinical licensure in California. These professionals deliver quality mental health services under the close supervision and mentorship of an experienced and diverse group of senior clinicians. The dual mission of "BurbankFSA" is to provide accessible, high-quality mental health care to the community and to cultivate the next generation of mental health providers. This unique collaborative model ensures that the partnership can offer seamless access to community-focused mental health services while fostering the professional growth of future clinicians.

Equipment and Supplies

All equipment and supplies necessary for the operation of the program will be provided exclusively by "BurbankFSA." This includes any materials required to support the implementation of services, ensuring that staff and students have access to the resources needed to achieve program goals. By maintaining responsibility for equipment and supplies, "BurbankFSA" helps ensure consistency and quality across all program activities.

GENERAL PROVISIONS

Modifications and Amendments

Any changes or modifications to this agreement must be documented in writing and signed by both “BurbankFSA” and the "District." This process ensures that all parties are fully aware of and agree to any adjustments made to the terms of the contract.
Administrative changes that do not alter the mental health services provided under the agreement may be implemented at any time during the contract period. Such changes require mutual consent from both “BurbankFSA” and the "District." This approach allows for flexibility in managing the administrative aspects of the agreement while maintaining the integrity of the mental health services.

Independent “BurbankFSA” Status

For the purposes of this agreement, “BurbankFSA” shall operate as an independent contractor. At no time will “BurbankFSA” be considered an officer, employee, or agent of the "District." This distinction ensures that “BurbankFSA” is fully responsible for its operations and personnel, and is solely responsible for fulfilling its contractual obligations without direct oversight or intervention from the "District."

Termination

Either party to this agreement may initiate termination by providing the other party with written notice at least one hundred twenty (120) calendar days in advance. This termination clause allows both “BurbankFSA” and the "District" sufficient time to prepare for the conclusion of services and ensures an orderly ethical transition or cessation of care.

Inspection and Audit

“BurbankFSA” agrees to provide the "District" with reasonable access to all relevant books, documents, papers, reports, records, or other materials related to the execution and administration of this contract upon receiving a reasonable request. Such access is intended to support the "District" in fulfilling its oversight and audit responsibilities. In complying with

these requests, “BurbankFSA” will continue to adhere to all current state laws and regulations concerning the confidentiality of mental health service records.

Confidentiality

All information obtained by “BurbankFSA” during the course of providing services under this agreement will be regarded as confidential. “BurbankFSA” shall not disclose any such information to third parties without obtaining written consent from the appropriate party. Furthermore, “BurbankFSA” will comply fully with all applicable state confidentiality laws governing the provision and handling of mental health services.

Indemnification

“BurbankFSA” shall, at its own expense, cost, defend, hold harmless, and indemnify "District" and its officers, agents, and employees from all liabilities and claims for damages for death, sickness, or injury to persons or property including without limitation all consequential damages, from any cause whatsoever arising from or connected with its services hereunder, resulting from the negligence of “BurbankFSA”, its agents, or employees.

The "District" shall, at its own expense, cost, defend, hold harmless, and indemnify “BurbankFSA” and its officers, agents, and employees from all liability and claims for death, sickness, or injury to persons or property including without limitation all consequential damages, from any cause whatsoever arising from or connected with its services hereunder, resulting from negligence of "District", its agents, or employees.

Insurance

During the entire term of this contract and any extension or modification thereof, “BurbankFSA” shall keep in effect a policy or policies of comprehensive general liability insurance, $2,000,000 for each person, and Sexual Molestation and Abuse coverage, $3 million per occurrence/$3 million aggregate.

“BurbankFSA" shall, at its own cost and expense, procure and maintain insurance under the Worker's Compensation Law. All policies will name the "District' as Additional Insured.

Notices

All notices required under this contract must be provided in writing. Notices may be sent using certified or registered mail, with postage prepaid, to ensure proper delivery and documentation. Any notice directed to the "District" must be addressed to the Superintendent. Notices intended for “BurbankFSA” should be sent to the Executive Director at the address specified in this contract for “BurbankFSA.” The effective date of any notice will be based on the postmark date.

Payment Provisions

Payment invoices are to be submitted to the "District" monthly and will be payable within thirty days from the date of receipt. For the contract year 2026-27, the payment amount shall not exceed $142,000.00. In addition, “BurbankFSA” will provide the "District" with a quarterly report, which will include information on the campus served, number of therapists assigned, number of students served, and units of care provided.

IN WITNESS WHEREIN

The parties hereto have executed this agreement to be as of the day and first above written. The contract is effective July 1, 2026, to June 30, 2027, ending at 12:00 PM unless terminated earlier as stated herein.

BURBANK UNIFIED SCHOOL DISTRICT
1900 W. Olive Ave., Burbank, CA 91506

SIGNATURE: _____ DATE: _____
Oscar Macia, Ed.D., Interim Superintendent

FAMILY SERVICE AGENCY OF BURBANK
2721 West Burbank Boulevard Burbank, CA 91505

SIGNATURE: _____ DATE: _____
Laurie Bleick, Executive Director

Burbank Unified School District
Instructional Services

REPORT TO THE BOARD

TO:	Members of the Board of Education
FROM:	Peter Knapik, Assistant Superintendent of Educational Services
PREPARED BY:	Peter Knapik, Assistant Superintendent of Educational Services
SUBMITTED BY:	Laura Erisman, Administrative Secretary
DATE:	May 7, 2026
SUBJECT:	Approval of Agreement for Professional Services Provided by Family Services Agency of Burbank for Special Education Students in 2026-2027

Background:

Per the Individual with Disabilities Education Act ("IDEA") students are required to receive related services, as needed to benefit from their educational program. Individual and Parent Counseling are two of these related services. Historically, the district has contracted with non-public agencies to provide these mental health services for its Special Education students. The funding for these services comes from the State and Federal Mental Health budget.

District-wide Goals (2025-2026):

1.0 Students will be career/college ready via high-quality instruction.
2.0 Students and Staff will be physically, emotionally, and mentally healthy.

Discussion/Issues:

For the 2026-2027 school year, staff is requesting that the District continue to contract with local mental health service providers and non-public agency, Family Services Agency of Burbank (FSA), to provide these IEP-related services to students who require them per their IEPs. This agency provided the same services during the 2025-2026 school year. As noted in the proposed contract with FSA, the agency would be providing the following services for up to 150 students:

- Individual and/or group counseling as required; to Special Education students, as specified in their IEPs;
- Parent counseling and education, in support of students' educational and social/emotional needs at school;
- Support and participation at IEP meetings, as needed; and
- Communication with District and site based support staff, as needed.

Fiscal Impact:

The fiscal impact of these contracted services would be up to, but not to exceed $530,000. The funding source would be State and Federal Mental Health funds.

Recommendation:

Peter Knapik, Assistant Superintendent of Educational Services, recommends that the Board of Education approve the agreement between the Burbank Unified School District and the Family Services Agency of Burbank to provide IEP-based mental health services for qualifying Special Education students, effective July 1, 2026 through June 30, 2027, not to exceed $530,000 (01.0-65460.0-57601-11800-581440000), and the authority to sign the contract be exercised pursuant to BUSD-AR 3314, as presented.

Family Service Agency of Burbank

MENTAL HEALTHCARE SERVICE AGREEMENT 2026-27.

BURBANK UNIFIED SCHOOL DISTRICT SPECIAL EDUCATION STUDENTS

This agreement is made and entered into on July 1, 2026.
This agreement is between the Burbank Unified School District (hereinafter referred to as "District") and the Family Service Agency of Burbank (hereinafter referred to as "BURBANKFSA").
The primary purpose of this agreement is to provide mental healthcare services to special education students within the District's schools. These services will be delivered in accordance with the specified program and within the resources available.

The Program Goals and Objectives

The primary purpose of the program is to address students' emotional and psychological needs, ensuring they can access their education in the least restrictive environment. This support helps students manage mental health challenges that may impact their learning, behavior, and social-emotional development.

Program Description, Implementation, and Eligibility

"BurbankFSA" will provide:

- Individual and/or group counseling as required for special education students, as recommended for counseling services by "District" staff, as part of these students' overall educational programs as outlined in the goals and services of their Individual Education Plans (IEPs).
- Parent counseling and education for students in the program, as required, in support of each child's educational programs as outlined in the goals and services of their Individual Education Plans (IEPs).
- At the high school and middle school levels, "BurbankFSA" will provide quarterly progress updates on goals.
- At the elementary level, "BurbankFSA" will provide triannual progress updates on goals.

"BurbankFSA" will continue to make IEP attendance a priority, attending all IEP meetings possible.

The "District" will provide "BurbankFSA:"

- A current staff roster (school psychologist/case carrier) per campus at the beginning of each contract year.
- An annual IEP Calendar at the beginning of each contract year.
- A quarterly progress and triannual report calendar at the beginning of each contract year.

- Reasonable notification (1-week minimum) of newly scheduled IEP meetings and adjustments to the standing calendar will be communicated to "BurbankFSA."
- Continue to be available to join "BurbankFSA's" staff training on the drafting of educationally related social-emotional goals for IEPs when deemed necessary.
- A copy of all student's IEPs at the time of referral.
- The "District" will identify, prior to referral, the appropriate clinical space for "BurbankFSA" to provide individual/group student care on campus.

Students will be eligible for "BurbankFSA's" care upon the parent(s)/guardian(s) signing the I.E.P document and "BurbankFSA's" release to treat a minor. It is agreed that the "District" will provide all students' parents/guardians with "BurbankFSA's" release to treat a minor form for signature.

Collaboration for Student Well-Being

Through this unique partnership, the "District" and "BurbankFSA" leadership agree to collaborate closely on matters related to student mental health.

Location

The services for this program will be provided on "District" campuses. Under special circumstances, an alternative site and/or modality, mutually agreed to by the "District," "FSA," and parent/guardian, may be deemed clinically more appropriate.

Dates of Implementation and Completion

The program, which coincides with the school calendar, will be implemented on July 1, 2026, and completed at 12:00 PM on June 30, 2027. Both parties understand that extended school year (ESY) services during the summer will be determined by the resources available. The contract can be renewed annually thereafter.

Staffing

"BurbankFSA" is a CA. Department of Education approved-certified NPA. The program utilizes the appropriate level of clinical, educational, and administrative staff necessary to complete the scope of work.

"BurbankFSA" is highly regarded as a leading mental health training site in the region, operating with the same level of excellence as a distinguished teaching hospital. "FSA's" comprehensive training program is designed to nurture the professional growth of approximately 45 master's and/or doctoral-level graduate students each year.

"BurbankFSA's" team includes a diverse group of gifted licensed clinicians and individuals working towards a clinical license in the state of California. These individuals provide quality mental health services under the close guidance/supervision of a diverse group of highly experienced clinicians. "BurbankFSA's" team is fiercely committed to this dual mission – providing quality mental health services to everyone and developing the next generation of mental health providers. It is this unique model, in partnership, that allows "BurbankFSA" to provide unobstructed access to high-quality, community-driven mental healthcare services effectively and efficiently.

Equipment and Supplies

Equipment and supplies will be coordinated by "BurbankFSA" and the "District."

Program Participation

This special education mental health service program will provide intervention services for special education students enrolled on "District" School campuses that have been determined appropriate for services by the "District" and "BurbankFSA" staff.

Up to 150 students may be served by the program at capacity. Those indirectly impacted will be classmates, teachers, school support staff, community members, family members, and the greater Burbank community.

Students participate in the program as stated in their Individual Education Plans (IEPs).

If a student and their family believe it is beneficial to maintain services beyond the IEP-designated services, a transfer of care can be made available, when deemed appropriate and resources are available, to "BurbankFSA's" existing youth mental health program. It is acknowledged that other existing youth mental health program provided by "BurbankFSA" on campus does not encompass the specialized clinical care described herein and, therefore, will not be used as a substitute. The "District" will confirm available resources with "BurbankFSA" prior to offering a transfer to "BurbankFSA's" youth mental health program counseling program.

While the focus of support will be on the students being served, parent(s)/guardians and "District' staff will be engaged, as needed, to reinforce and support services.

Program Documentation and Communication

"BurbankFSA" will :

- maintain documentation/logs for services provided. "BurbankFSA" will submit a quarterly report to the "District" documenting the number of students served and units of care provided.
- provide the "District" with updates on any significant changes or transitions regarding assigned clinical interns or licensed counselors providing counseling services.
- Contact the student's assigned school psychologist and inform them that "BurbankFSA" is closing the student's clinical file when a student refuses mental health care or doesn't respond to calls on multiple consecutive occasions. It is agreed that in these rare cases, "BurbankFSA" will continue to maintain an administrative file until a determination of future mental health care has been made.

The "District' will:

- provide "BurbankFSA" with an updated student/school site referral list in the first month of the new agreement (July).

- provide “BurbankFSA” therapists with mailboxes at the schools where they provide services. “District” staff may contact “BurbankFSA’s” program Director regarding student progress.

GENERAL PROVISIONS

Modifications and Amendments

Any changes or modifications to this agreement must be documented in writing and signed by both “BurbankFSA” and the "District." This process ensures that all parties are fully aware of and agree to any adjustments made to the terms of the contract.

Administrative changes that do not alter the mental health services provided under the agreement may be implemented at any time during the contract period. Such changes require mutual consent from both “BurbankFSA” and the "District." This approach allows for flexibility in managing the administrative aspects of the agreement while maintaining the integrity of the mental health services.

Independent “BurbankFSA” Status

For the purposes of this agreement, “BurbankFSA” shall operate as an independent contractor. At no time will “BurbankFSA” be considered an officer, employee, or agent of the "District." This distinction ensures that “BurbankFSA” is fully responsible for its operations and personnel and is solely responsible for fulfilling its contractual obligations without direct oversight or intervention from the "District."

Termination

Either party to this agreement may initiate termination by providing the other party with written notice at least one hundred twenty (120) calendar days in advance. This termination clause allows both “BurbankFSA” and the "District" sufficient time to prepare for the conclusion of services and ensures an orderly ethical transition or cessation of care.

Inspection and Audit

“BurbankFSA” agrees to provide the "District" with reasonable access to all relevant books, documents, papers, reports, records, or other materials related to the execution and administration of this contract upon receiving a reasonable request. Such access is intended to support the "District" in fulfilling its oversight and audit responsibilities. In complying with these requests, “BurbankFSA” will continue to adhere to all current state laws and regulations concerning the confidentiality of mental health service records.

Confidentiality

All information obtained by “BurbankFSA” during the course of providing services under this agreement will be regarded as confidential. “BurbankFSA” shall not disclose any such information to third parties without obtaining written consent from the appropriate party. Furthermore, “BurbankFSA” will comply fully with all applicable state confidentiality laws governing the provision and handling of mental health services.

Indemnification

"BurbankFSA" shall, at its own expense, cost, defend, hold harmless, and indemnify "District" and its officers, agents, and employees from all liabilities and claims for damages for death, sickness, or injury to persons or property including without limitation all consequential damages, from any cause whatsoever arising from or connected with its services hereunder, resulting from the negligence of "BurbankFSA", its agents, or employees.

The "District" shall, at its own expense, cost, defend, hold harmless, and indemnify "BurbankFSA" and its officers, agents, and employees from all liability and claims for death, sickness, or injury to persons or property including without limitation all consequential damages, from any cause whatsoever arising from or connected with its services hereunder, resulting from negligence of "District", its agents, or employees.

Insurance

During the entire term of this contract and any extension or modification thereof, "BurbankFSA" shall keep in effect a policy or policies of comprehensive general liability insurance, $2,000,000 for each person, and Sexual Molestation and Abuse coverage, $3 million per occurrence/$3 million aggregate.

"BurbankFSA" shall, at its own cost and expense, procure and maintain insurance under the Worker's Compensation Law. All policies will name the "District' as Additional Insured.

Notices

All notices required under this contract must be provided in writing. Notices may be sent using certified or registered mail, with postage prepaid, to ensure proper delivery and documentation. Any notice directed to the "District" must be addressed to the Superintendent. Notices intended for "BurbankFSA" should be sent to the Executive Director at the address specified in this contract for "BurbankFSA." The effective date of any notice will be based on the postmark date.

Payment Provisions

Payment invoices are to be submitted to the "District" monthly and will be payable within thirty days from the date of receipt. For the contract year 2026-27, the payment amount shall not exceed $530,000.00. In addition, "BurbankFSA" will provide the "District" with a quarterly report, which will include information on the campus served, number of therapists assigned, number of students served, and units of care provided.

Summer session services may be added, as amended by a written document executed by "BurbankFSA" and "District."

IN WITNESS WHEREOF

the parties hereto have executed this agreement
to be as of the day and year first above written.
This contract is effective July 1, 2026, and terminates at 12:00 p.m. on June 30, 2027,
unless sooner terminated as provided herein.

BURBANK UNIFIED SCHOOL DISTRICT
1900 W. Olive Ave., Burbank, CA 91506

SIGNATURE:_____DATE _____
Oscar Macias, Ed.D., Interim Superintendent

FAMILY SERVICE AGENCY OF BURBANK
2721 West Burbank Boulevard Burbank, CA 91505

SIGNATURE:_____DATE _____
Laurie Bleick, Executive Director

BURBANK UNIFIED SCHOOL DISTRICT
Human Resources Services

REPORT TO THE BOARD

TO:	Members of the Board of Education
FROM:	Human Resources Services
PREPARED BY:	Lauren Trammell, Executive Assistant of Human Resources Services
SUBMITTED BY:	Lauren Trammell, Executive Assistant of Human Resources Services
DATE:	May 7, 2026
SUBJECT:	Adoption of Resolution 46 Implementing Certificated Layoffs

---

Background
The Board of Education, at the Board Meeting held on March 5, 2026 approved Resolution No. 25 for the Decrease the Number of Certificated Employees Due to a Reduction in Particular Kinds of Service for the 2026-2027 School Year. Layoff notice letters were given to the certificated employees whose services will not be required for the ensuing school year as authorized by Education Code 44949 and 44955.

Discussion/Issues
Resolution No. 25 indicates 17.5 FTE reductions in certificated services. This includes four (4) administrative positions which are governed by a different notice procedure (EC44951).

Fiscal Impact
Reductions in cost are based on salary and benefits of the certificated positions being eliminated. The reduction to the general fund is estimated to be approximately $2,290,292.00.

Recommendation
Human Resources Services, recommends that the Board of Education adopt Resolution 46, Implementing Certificated Layoffs, as presented.

BEFORE THE BOARD OF EDUCATION
OF THE BURBANK UNIFIED SCHOOL
DISTRICT
LOS ANGELES COUNTY

RESOLUTION 46

IMPLEMENTING CERTIFICATED LAYOFFS
(Terminating Services of Certificated Employees as a Result of the Reduction or Discontinuation of Particular Kinds of Services)

WHEREAS, on March 5, 2026, this Board adopted Resolution No. 25 to reduce or discontinue particular kinds of certificated services no later than the beginning of the 2025-2026 school year, as described and set forth in that Resolution;

WHEREAS, on or before March 15, 2026, the Superintendent's designated representatives served notice on the 17.5 affected certificated employees that it has been recommended that their services will not be required for the 2025-2026 school year pursuant to Education Code sections 44949 and 44955;

WHEREAS, said notice advised the recipients that they each could request a hearing to determine if there was cause for not reemploying him or her for the 2026-2027 school year, and that failure to timely request a hearing shall constitute a waiver of the right to a hearing and his or her services will accordingly be terminated pursuant to the recommendation, without a hearing;

WHEREAS, the preliminary layoff notices affected seventeen (17.5) full time equivalent positions; 2 High School Assistant Principals, 1.5 Middle School Assistant Principals, 10 Elementary Teachers, 3 Special Education Teachers, 1 Assistant Superintendent.

WHEREAS, Education Code section 44949, subdivision (c)(3), provides that this Board shall make the final determination as to the sufficiency of the cause and disposition of the layoff;

WHEREAS, Education Code section 44955, subdivision (c), requires final Board action and notifications to employees before May 15, unless that date is extended pursuant to Education Code section 44949, subdivision (e);

WHEREAS, the particular kinds of services to be discontinued and reduced as referenced in Resolution No. 25 are determined to be a particular kinds of services within the meaning of Education Code section 44955;

WHEREAS, the particular kinds of services to be discontinued and reduced as referenced in Resolution No. 25 will be discontinued and reduced within the meaning of Education Code section 44955 not later than the beginning of the 2026-2027 school year;

WHEREAS, except as otherwise authorized by statute, the services of no permanent employee (or other employee) are being terminated, in whole or in part, while any probationary employee, or any other employee with less seniority is being retained to render a service which said permanent (or other) employee is certificated and competent to render, within the meaning of Education Code section 44955(b); the individuals whose employment is being terminated, in whole or in part, are not certificated and competent (within the meaning of Education Code section 44955) to render the service being performed by any employee with less seniority who is being retained;

WHEREAS, sufficient cause exists for the termination of up to 17.5 full-time equivalent certificated positions, and pursuant to and within the meaning of Education Code section 44949, said cause relates to the welfare of the schools and the pupils thereof;

WHEREAS, Education Code section 44951, requires that an employee holding an administrative or supervisory credential is sent written notice of being released from his or her position for the following school year or that he or she shall be continued in the position. Two (2) employees (Laura Seese and James Tarouilly) received this notice that they would be released from their administrative assignments for the 2025-2026 school year. No hearing rights are associated with these notices so all statutory prerequisites have been met;

NOW, THEREFORE, BE IT RESOLVED, by the Governing Board of the Burbank Unified School District as follows:

1. That all of the foregoing recitals are true and correct.

2. The Board hereby determines that the authorized reduction of 17.5 full-time equivalent certificated positions has been accomplished through attrition, vacancy elimination, and operational adjustments.

3. That the employment of each of the certificated employees listed above be and hereby terminated effective upon the close of this school year, i.e., the end of the last working day as to each employee prior to July 1, 2026.

4. That the Superintendent or designee shall take such actions as are necessary and appropriate to implement this Board's decision, including at least giving appropriate notice to the certificated employee listed above of the termination of their services because of discontinuances and reductions of particular kinds of services to take effect upon the close of this school year, with these notices being given *before May 15*, *2026*, in the manner prescribed in Education Code section 44949.

5. That James Tarouilly and Laura Seese shall be released from their administrative assignments upon the close of this school year, i.e., the end of the last working day as to each employee prior to July 1, 2026, and reassigned for the 2026-2027 school year to a certificated position within the scope of their credentials held pursuant to Education Code section 44951.

6. That the Superintendent or designee shall take such actions as are necessary and appropriate to implement this Board's decision, including at least giving appropriate notice to James Tarouilly and Laura Seese of their release and reassignment, with these notices being given *before May 15*, *2026*.

The foregoing Resolution was adopted by the Governing Board of the Burbank Unified School District on the 7th day of May, 2026.

AYES: ___

NOES: ___

ABSTAIN: ____

ABSENT: ____

Abigail Pontzer Kamkar
President, Governing Board of the Burbank
Unified School District

I, Laurette Cano, Clerk of the Governing Board of the Burbank Unified School District, do certify that the foregoing Resolution was regularly introduced, passed and adopted by the Governing Board at its regular meeting held on May 7, 2026.

Laurette Cano
Clerk, Governing Board of the
Burbank Unified School District

BURBANK UNIFIED SCHOOL DISTRICT
Human Resources Services

REPORT TO THE BOARD

TO: Members of the Board of Education

FROM: Human Resources Services

PREPARED BY: Cindy Quiterio, Supervisor, Human Resources Services

SUBMITTED BY: Lauren Trammell, Executive Assistant, Human Resources Services

DATE: May 7, 2026

SUBJECT: Adoption of Resolution 47 Implementing Classified Layoffs

---

Background
The Board of Education, at a Board Meeting held on March 5, 2026, approved Resolution No. 24 for the Elimination or Reduction in Classified positions for the 2026-2027 school year. In Accordance with Education Code sections 45117 and 45308, layoff notice letters were given to Classified employees that will be affected and, accordingly, will not be employed for the following 2026-2027school year.

Discussion/Issues
Resolution No. 24 indicates 11.19 FTE will be affected.

Fiscal Impact
Reductions in cost are based on the salary and benefits of the classified positions being eliminated.

Recommendation
Human Resources Services, recommends that the Board of Education adopt Resolution 47 Implementing, Classified Layoffs, as presented.

BEFORE THE BOARD OF EDUCATION
OF THE
BURBANK UNIFIED SCHOOL DISTRICT
LOS ANGELES COUNTY, STATE OF CALIFORNIA

RESOLUTION 47

IMPLEMENTING CLASSIFIED LAYOFFS

(Terminating Services or Implementing Transfers of Classified Employees as a Result of the Reduction or Discontinuation of Particular Kinds of Services)

WHEREAS, on March 5, 2026, this Board adopted Resolution No. 24 to eliminate or reduce classified positions due to lack of work or lack of funds no later than the beginning of the 2026-2027 school year, as described and set forth in that Resolution;

WHEREAS, on or before March 15, 2026, the Superintendent's designated representatives served notice on the 35 affected classified employees that it has been recommended that their positions be reduced in hours or eliminated for the 2026-2027 school year and advising them of their displacement and rehire rights, pursuant to Education Code sections 45117;

WHEREAS, said notice advised the recipients that they each could request a hearing to determine if there was cause for not reemploying him or her for the 2026-2027 school year in their former position, and that failure to timely request a hearing shall constitute a waiver of the right to a hearing and his or her services will accordingly be terminated or reduced pursuant to the recommendation, without a hearing;

WHEREAS, the preliminary layoff notices issued to 35 employees (6) have been rescinded based on attrition and/or program needs;

WHEREAS, none of the employees whose notice was not rescinded requested a hearing within the time allowed and waived any rights to a hearing; all the jurisdictional and statutory prerequisites have been satisfied as to such employees as required by law;

WHEREAS, Education Code section 45117, subdivision (c)(3), provides that this Board shall make the final determination as to the sufficiency of the cause and disposition of the layoff;

WHEREAS, Education Code section 445117, subdivision (c), requires final Board action and notifications to employees before May 15, unless that date is extended due to a continuance of a hearing;

WHEREAS, the services to be eliminated and reduced as referenced in Resolution No. 47 will be eliminated and reduced within the meaning of Education Code section 45117 not later than the beginning of the 2026-2027 school year;

WHEREAS, the services of no classified employee shall be eliminated or reduced while any short-term employee is retained to render a service that the classified employee is qualified to render;

WHEREAS, sufficient cause exists for the termination or reassignment of classified employees and said cause relates to the welfare of the schools and the pupils thereof pursuant to and within the meaning of Education Code section 45117;

NOW, THEREFORE, BE IT RESOLVED, by the Governing Board of the Burbank Unified School District as follows:

1. That all of the foregoing recitals are true and correct.

2. That sufficient cause exists for the termination of the services of the 2026-2027 (28) classified employees listed in Exhibit 1 (all being 1.0 full-time equivalency unless indicated otherwise).

3. That the employment of each of the classified employees to be terminated as listed in Exhibit 1 is hereby terminated effective upon the close of this school year, i.e., the end of the last working day as to each employee prior to July 1, 2026.

4. That sufficient cause exists for the reassignments of the 28 classified employees who exercised their displacement rights or reductions in hours listed in Exhibit 1.

5. That the reassignments of each of the classified employees listed in Exhibit 1 is hereby ordered to take effect July 1, 2026.

6. That the Superintendent or designee shall take such actions as are necessary and appropriate to implement this Board's decision, including at least giving appropriate notice to the employees listed in Exhibit 1 of the termination of their services, or change in position, because of the elimination or reduction of classified positions to take effect upon the close of this school year, with these notices being given *before May 15, 2026,* in the manner prescribed in Education Code section 45117.

The forgoing Resolution was adopted by the Governing Board of the Burbank Unified School District on the 7th day of May, 2026.

AYES: _____

NOES: _____

ABSTAIN: _____

ABSENT: _____

_____
Abigail Pontzer Kamkar
President, Governing Board of the Burbank Unified School District

I, Laurette Cano, Clerk of the Governing Board of the Burbank Unified School District, do certify that the foregoing Resolution was regularly introduced, passed and adopted by the Governing Board at its regular meeting held on May 7, 2026

_____
Laurette Cano
Clerk, Governing Board of the Burbank Unified School District

Exhibit 1
(Terminations and Reassignments)

Last Name	First Name	Current Position	Current FTE	Position Effective 7/1/26	New FTE
Abarca Mena	Amanda	Behavior Intervention Assistant	0.9063	Behavior Intervention Assistant	0.8125
Aransky	Desiree	Paraeducator-Special Ed	0.75	Paraeducator-Special Ed	0.8125
Batarina	Raymond	Paraeducator-Severe Behavioral II	0.8125	Behavior Intervention Assistant	0.8125
Caceres	Adriana	Behavior Intervention Assistant	1	Behavior Intervention Assistant	0.8125
Cafferty	Roni	Paraeducator-Severe Behavioral II	0.8125	Behavior Intervention Assistant	0.8125
Campbell	Cheryl	Paraeducator-Healthcare	0.8125	Paraeducator-Healthcare	0.8125
Escobedo Barona	Hael Melissa	Behavior Intervention Assistant	0.8438	Behavior Intervention Assistant	0.8125
Faudree	Steven	Paraeducator-Severe Behavioral II	0.8125	Behavior Intervention Assistant	0.8125
Gutierrez	Silvia	Behavior Intervention Assistant	0.9375	Behavior Intervention Assistant	0.8125
Hovsepyan	Elma	Behavior Intervention Assistant	0.875	Behavior Intervention Assistant	0.8125
Kim	Candance	Paraeducator-Special Ed	0.75	Paraeducator-Special Ed	0.75
Kirkpatrick	Gloria	Behavior Intervention Assistant	0.875	Behavior Intervention Assistant	0.8125
Lopez Acevedo	Julieta	Paraeducator-Special Ed	0.75	Paraeducator-Special Ed	0.75
Matvienko	Barbara	Paraeducator-Severe Behavioral II	0.8125	Paraeducator-Severe Behavioral II	0.8125
Morales	Kimberly	Paraeducator-Severe Behavioral II	0.8438	Behavior Intervention Assistant	0.8125
Navarro	Carolina	Paraeducator-Severe Behavioral II	0.8125	Behavior Intervention Assistant	0.8125

Neminova	Victoriya	Behavior Intervention Assistant	0.8438	Behavior Intervention Assistant	0.8125
Rosenthal	Erica	Paraeducator-Severe Behavioral II	0.9375	Paraeducator-Severe Behavioral II	0.8438
Ruiz De Castillo	Alicia	Behavior Intervention Assistant	0.9475	Behavior Intervention Assistant	0.8125
Salazar	Claudia	Paraeducator - Special Education	0.75	Layoff	0.75
Salcedo	Miriam	Food Service Supervisor III	1	Food Service Supervisor II	1
Sanchez	Miguel	Behavior Intervention Assistant	0.9688	Behavior Intervention Assistant	0.8125
Solis	Santos	Paraeducator-Severe Behavioral II	0.8125	Behavior Intervention Assistant	0.8125
Toledo	Ervin Joshua S	Paraeducator - Special Education	0.75	Behavior Intervention Assistant	0.75
Velazquez	Jacqueline	Paraeducator-Special Education	0.75	Paraeducator-Special Ed	0.8125
Watters	Elizabeth	Paraeducator-Severe Behavioral II	0.8125	Paraeducator-Severe Behavioral II	0.8125
Wilkins	Yoanna Carolina	Paraeducator-Special Ed	0.75	Paraeducator-Special Ed	0.75
Yaeger	Shannon Marie	Behavior Intervention Assistant	0.8963	Behavior Intervention Assistant	0.8125

Rescind

Last Name	First Name	Current Position	Current FTE
Sanchez	Cynthia	Paraeducator DHH	0.875
Vazquez	Jasmine	Paraeducator DHH	0.875
Johnson	Rachael	Paraeducator-Special Ed	0.875
Nava	Armando	Paraeducator-Special Ed	0.8438
Spens	Kaydon	Paraeducator-Special Ed	0.8125
Salcedo	Leticia	Paraeducator-Special Ed	0.8125

Name	Current Position	Current FTE	Position Effective 7/1/25	New FTE
Garrido Elisabeth	Paraeducator-Special Ed	0.75	Elected Layoff	0

BURBANK UNIFIED SCHOOL DISTRICT
Human Resources Services

REPORT TO THE BOARD

TO:	Members of the Board of Education
FROM:	Human Resources Services
PREPARED BY:	Lauren Trammell, Executive Assistant of Human Resources Services
SUBMITTED BY:	Lauren Trammell, Executive Assistant of Human Resources Services
DATE:	May 7, 2026
SUBJECT:	Approval of Resolution 48 Declaring Salaries Indefinite and to Authorize Regular and Retroactive Pay Changes for the 2026-2027 School Year

---

Background
The County requires that the Board of Education take action before the beginning of the new fiscal year, if they anticipate changes in employee salaries as a result of negotiations with our union partners. The Burbank Unified School District is requesting that the Board of Education approve this resolution authorizing the potential change of salaries for all Management, Confidential, Classified, Certificated and Unrepresented employees for the 2026-2027 school year.

Discussion/Issues
The resolution with Education Code section 45032, 45162, and 87806 provide that salaries may be set at any time during the school year. As a resolute of negotiations, legislation and other factors the Burbank Unified School District is requesting that the Board of Education approve this resolution to declare all employee salaries indefinite for the 2026-2027 school year. In anticipation of changing salaries due to yearly legislation, union bargaining, and other factors, salaries may be changed retroactively and regularly.

Fiscal Impact
Amounts are unknown, as negotiations, legislation, and other factors have not been established yet.

Recommendation
Human Resources Services, recommends that the Board of Education approve Resolution 48 Declaring Salaries Indefinite and to Authorize Regular and Retroactive Pay Changes for the 2026-2027 School Year, as presented.

RESOLUTION 48 DECLARING SALARIES INDEFINITE TO AUTHORIZE REGULAR AND RETROACTIVE PAY CHANGES FOR THE 2026-2027 SCHOOL YEAR

Whereas: according to Education Code section 45032, 45162, and 87806 provide that salaries can be set at any time during the year;

Whereas: the Burbank Unified School District expects negotiations, legislation, and other factors will lead to change in salaries for all employees of the District;

NOW, THEREFORE, BE IT RESOLVED, That the Board of Education declares that all employee salaries are to be "indefinite" for the 2026-2027 school year in anticipation to negotiations, legislations, and other factors that will lead to their change

I HEREBY CERTIFY that Resolution 48 was approved and adopted by the Board of Education of the Burbank Unified School District at a regular meeting held on the 7th day of May, 2026.

Ayes:
Noes:
Abstain:
Absent:

_____

Laurette Cano, Clerk, Board of Education

BURBANK UNIFIED SCHOOL DISTRICT
Human Resources Services

REPORT TO THE BOARD

TO:	Members of the Board of Education
FROM:	Human Resources Services
PREPARED BY:	Peter Knapik, Assistant Superintedent of Educational Services
SUBMITTED BY:	Lauren Trammell, Executive Assistant of Human Resources Services
DATE:	May 7, 2026
SUBJECT:	Approval of Revised Job Description for Director of Arts and Career Technical Education (CTE) on Certificated Supervisors and Managers Salary Schedule A, Range A

Background
The Burbank Unified School District has revised the job description for the Director of Arts and Career Technical Education (CTE) to more clearly define and strengthen the role. The updates align the position with current state priorities, funding requirements, and program accountability expectations. In addition, the revisions clarify role expectations and elevate the Director's leadership responsibilities to lead the Arts and CTE Programs.

Discussion/Issues
The revised responsibilities for the Director of Arts and Career Technical Education (CTE) will report directly to the Superintendent and will be responsible for the districtwide oversight of VAPA (Visual and Performing Arts) and Career Technical Education (CTE).

The Director will be in charge and responsible to maintain and cultivating relationships with business within the art industry, postsecondary institutions and the California Department of Education. They will be held accountable for securing, administering, and reporting on major funding sources including:

- Perkins
- CTE Intensive Grant
- K-12 Workforce
- Proposition 28 (Art and Music in Schools)

They will act as the support for recruit and retain VAPA and CTE educators with appropriate credentialing. Appropriate staffing in turn will support student career advancement, work-based learning opportunities such as internships, apprenticeships and industry engagement.

Fiscal Impact:
The position of Director of Arts and Career Technical Education (CTE) will be on Certificated Management Salary Schedule A, Range A, with a salary of $138,841.00- $192,589.00.

Recommendation

Human Resources Services, recommend that the Board of Education approve the Revised Job Description for Director of Arts and Career Technical Education (CTE) on Certificated Supervisors and Managers Salary Schedule A, Range A, effective May 8, 2026, as presented.

BURBANK UNIFIED SCHOOL DISTRICT

CLASS TITLE: DIRECTOR OF ARTS AND CAREER TECHNICAL EDUCATION

Primary Function:

~~To provide leadership and ongoing support for career technical education and arts programs and serve as the District representative for local businesses and colleges, California Department of Education, and community resources in Visual and Performing Arts and Career Technical Education.~~

The Director of Visual and Performing Arts (VAPA) and Career Technical Education (CTE) will provide leadership and ongoing support for arts and career technical education programs and serve as the District liaison to local businesses and industry, as well as Post-Secondary partners, the California Department of Education, and community resources in Visual and Performing Arts.

Primary Duties and Responsibilities:

Under the direction of the ~~Assistant~~ Superintendent ~~of Educational/Instructional Services~~, the **Visual and Performing** Arts and Career Technical Education Director will:

- Oversee and promote high-quality curriculum and instruction aligned with the California CTE Model Curriculum Standards, including, but not limited to, helping to provide a coherent sequence of CTE course~~s~~ **pathways** that enable pupils to transition to **aligned** postsecondary **training and** education ~~programs~~ **as well as high-need careers** ~~that lead to a career pathway or employment~~ upon graduation from high school.
- Advise school site administrative team and counseling **teams on CTE and VAPA enrollment, as well as** ~~with~~ master scheduling to ensure appropriate sequencing of CTE courses **within pathways**.
- Support site administrative teams in securing qualified and credentialed CTE and VAPA teachers **through active connections to local industry and businesses.**
- ~~Assist to~~ **Recruits** and retain**s** skilled CTE and VAPA staff and provides professional development opportunities for CTE & VAPA teachers and staff.
- Support teachers in ~~the process of~~ obtaining a Designated Subjects ~~credential~~ ~~for~~ **or** CTE **credential, as necessary**.
- Plan, schedule, conduct, or assist in professional development for VAPA and CTE teachers.
- Support faculty and staff with standards-based curriculum for both VAPA and CTE.
- Represent the District at interagency meetings and training, including both local and state agencies.
- Assist in providing CTE ~~pupil~~ support services, including **career** counseling**, work-based learning related field trips, job shadowing, internships, student-led enterprises,** ~~and~~ ~~leadership~~ **after-school programs, and career expos** ~~and leadership development~~.
- Provide opportunities for pupils to participate in after-school or out-of-school internships, competitions, **apprenticeships,** and other work-based learning experiences.

- Serve as the liaison for student placement into internships for students in career pathways.
- Develop programs that lead to industry-recognized credentials, certificates, post-secondary education ~~pathways~~ **trainings** and/or employment opportunities.
- Promote the CTE & VAPA programs through outreach, marketing, and communications.
- ~~Assist in providing pupils with guidance related to high-quality career pathways & coordinates student outreach efforts with the school sites.~~
- Provide for system alignment, coherence, and articulation, including regional and local partnerships with postsecondary education institutions, documented through formal written agreements.
- Develop and maintain industry and labor partnerships, documented through formal written agreements and/or participation on advisory committees.
- Analyze local and regional labor market information (LMI) for emerging high-skill, high-wage, or high-demand occupations to inform BUSD CTE Pathways.
- Responsible for the applications and expenditure reporting requirements of all CTE program grants and all VAPA grants including, but not limited to, Carl D. Perkins, Career Technical Education Incentive Grant, Kl2 Strong Workforce grant, Advancement Grant, Proposition 28 (Art & Music in Schools), and other VAPA and CTE grants.
- Research **and complete** grant~~s~~ **applications** ~~applicable~~ for ~~either~~ VAPA or CTE, **as applicable**.
- Lead the process of completing the High Quality Career Technical Education Program Evaluation and Plan as a requirement for multiple CTE grants.
- Collaborate with Los Angeles Regional Consortium members and represents the BUSD.
- Oversee the BUSD CTE Advisory Committee(s) that includes CTE teachers, industry partners, school administrators, counselors, representatives of special populations, parents, and students.
- Collaborate with others ~~(e.g., teachers, counselors, administrators, students, parents, other District personnel, community organizations, etc.)~~ to implement and maintain services and access to programs for special populations.
- ~~Meet with employees, parents/guardians and students in routine situations regarding the CTE.~~
- Oversee the development, implementation, and regular review of the Burbank Unified School District *Arts for All* plan.
- Effectively develop and communicate the District *Arts for All* plan and the District CTE plan to the community.
- Oversee Teachers on Special Assignment for ~~Visual and Performing Arts (~~VAPA~~)~~ or the ~~Career Technical Education (~~CTE~~)~~ program, **as applicable**.
- Prepare and present regular reports on VAPA and CTE programs to the BUSD Board of Education and the Burbank community.
- ~~Assist school sites in properly placing students, monitoring student progression through the required course pathways, and promoting the attainment of applicable industry certification.~~

- Other related duties as assigned.

Knowledge, ~~and~~ Experience, **and Abilities**:

- Experience in the design and delivery of professional development
- Experience as a public speaker
- **Ability to demonstrate excellent** communication skills~~, including writing press releases and contributing to social media accounts~~
- Knowledge of model VAPA programs
- Knowledge of model CTE programs
- **Ability to c**ommunicate to a variety of audiences regarding the Career and Technical Education (CTE) program and the Visual and Performing Arts (VAPA) program
- Knowledge of principles and practices implementing **CTE** program~~s and multiple~~ pathways
- Experience in curriculum writing and standards alignment
- **Ability to** work independently with little supervision
- **Ability to** communicate effectively with administrators, teachers, community members, and parents, both orally and in writing
- **Ability to** gather and analyze data
- Prepare clear, concise reports
- **Ability to** demonstrate the use of strong organizational and leadership skills
- Knowledge of and ability to coordinate all aspects of grant management, including reporting requirements

Qualifications and Experience:

- Five years of teaching experience
- Possession of a master's degree from an accredited institution of higher education
- Possession of valid administrative credential
- **School Site** administrative experience (preferred)

CERTIFICATED SUPERVISORS AND MANAGERS
SALARY SCHEDULE A
Effective July 1, 2025

RANGE		DAYS	STEP 1	STEP 2	STEP 3	STEP 4	STEP 5	STEP 6	STEP 7	STEP 8
A	Director, Elementary Education and Diversity, Equity and Inclusion Director, Human Resources Director, Secondary Education and Diversity, Equity and Inclusion Director, Special Education and Psychological Services Director of Instructional Technology and Accountability Director, Student and Health Services Director, Adult School and FACTS Director, Arts and Career Technical Education	220 Per Diem	138,841 631.10	145,442 661.10	152,372 692.60	159,651 725.69	167,293 760.43	175,318 796.90	183,742 835.20	192,589 875.41
B	Principal. High School Principal, Alternative Education	220 Per Diem	132,028 600.13	138,634 630.16	145,561 661.65	152,841 694.74	160,483 729.47	168,507 765.95	176,932 804.24	185,777 844.45
C	Principal, Middle School	220 Per Diem	117,594 534.52	123,476 561.26	129,646 589.30	136,130 618.78	142,936 649.71	150,083 682.20	157,585 716.30	165,466 752.12
D	Principal, Adult Education	220 Per Diem	114,806 521.85	120,547 547.95	126,574 575.34	132,901 604.1	139,546 634.3	146,522 666.01	153,848 699.31	161,538 734.27
EE	No Position in this Classification	220 Per Diem	116,037 527.45	121,839 553.82	127,928 581.50	134,322 610.56	141,043 641.11	148,093 673.15	155,498 706.81	163,274 742.16
E	Coordinator, Special Education Principal, Elementary	215 Per Diem	113,399 527.44	119,068 553.81	125,019 581.49	131,270 610.56	137,836 641.10	144,728 673.16	151,963 706.81	159,562 742.15
F	Assistant Principal, High School	218 Per Diem	111,161 509.92	116,717 535.40	122,554 562.18	128,680 590.28	135,114 619.79	141,871 650.79	148,961 683.31	156,413 717.50
G	Assistant Principal, High School (hired after 7/1/13)	215 Per Diem	109,629 509.91	115,112 535.41	120,864 562.16	126,909 590.28	133,255 619.80	139,920 650.8	146,914 683.33	154,260 717.49

CERTIFICATED SUPERVISORS AND MANAGERS
SALARY SCHEDULE A
Effective July 1, 2025

RANGE		DAYS	STEP 1	STEP 2	STEP 3	STEP 4	STEP 5	STEP 6	STEP 7	STEP 8
H	No Positions in this Classification	210	108,532	113,954	119,652	125,632	131,914	138,511	145,434	152,705
		Per Diem	516.82	542.64	569.78	598.25	628.17	659.58	692.55	727.17
HH	Program Specialist II	215	100,353	105,374	110,640	116,173	121,978	128,080	134,481	141,206
	Program Specialist II: Workability	Per Diem	466.76	490.12	514.61	540.34	567.34	595.73	625.50	656.78
I	No Positions in this Classification	220	102,687	107,826	113,212	118,873	124,817	131,057	137,609	144,491
		Per Diem	466.76	490.12	514.60	540.34	567.35	595.72	625.50	656.78
J	Psychologist II	215	102,145	107,251	112,615	118,243	124,155	130,362	136,878	143,722
		Per Diem	475.10	498.85	523.80	549.97	577.47	606.34	636.65	668.48
K	Administrator on Special Assignment	213	101,828	106,919	112,264	117,878	123,772	129,958	136,459	143,281
	Assistant Principal, Middle School	Per Diem	478.07	501.97	527.07	553.42	581.09	610.14	640.66	672.69
L	Assistant Principal, Middle School	210	100,394	105,413	110,684	116,217	122,028	128,128	134,536	141,262
	Assistant, Principal, Alternative Education (hired after 7/1/12)	Per Diem	478.07	501.97	527.07	553.42	581.09	610.14	640.65	672.68
M	Assistant Principal, Adult Education	220	98,388	103,309	108,473	113,896	119,592	125,569	131,849	138,441
	Coordinator, Child Development Programs	Per Diem	447.22	469.59	493.06	517.71	543.6	570.77	599.32	629.28
N	Assistant Principal, Elementary	205	97,394	102,267	107,380	112,746	118,380	124,302	130,517	137,042
		Per Diem	475.1	498.87	523.81	549.99	577.47	606.36	636.67	668.50
O	Program Specialist I	200	93,357	98,021	102,922	108,068	113,470	119,141	125,098	131,352
	Psychologist I	Per Diem	466.79	490.11	514.61	540.34	567.35	595.71	625.49	656.76

CERTIFICATED SUPERVISORS AND MANAGERS
SALARY SCHEDULE A
Effective July 1, 2025

RANGE		DAYS	STEP 1	STEP 2	STEP 3	STEP 4	STEP 5	STEP 6	STEP 7	STEP 8
P	Educational Audiologist	187	90,360	94,874	99,619	104,597	109,827	115,317	121,082	127,137
		per diem	483.21	507.35	532.73	559.35	587.32	616.67	647.50	679.88
Q	Supervisor III, Child Development Centers Covering 2 Sites	220	74,985	78,737	82,672	86,805	91,144	95,705	100,487	105,514
		Per Diem	340.85	357.90	375.79	394.57	414.3	435.03	456.76	479.61
R	Supervisor III, Child Development Centers	220	71,472	74,987	78,736	82,672	86,805	91,147	95,703	100,487
		Per Diem	324.88	340.85	357.90	375.79	394.57	414.31	435.02	456.76
S	Supervisor II, Child Development Centers Covering 2 Sites	220	68,171	71,578	75,157	78,915	82,859	87,003	91,352	95,920
		Per Diem	309.87	325.36	341.63	358.71	376.64	395.47	415.24	436.00
T	Supervisor II, Child Development Centers	220	64,924	68,171	71,578	75,157	78,915	82,859	87,002	91,351
		Per Diem	295.11	309.87	325.36	341.63	358.71	376.64	395.47	415.24
U	Supervisor I, Child Development Centers	220	59,306	62,268	65,382	68,649	72,085	75,688	79,473	83,443
		Per Diem	269.58	283.04	297.20	312.05	327.66	344.04	361.25	379.29
V	Assistant Child Development Centers Supervisor	220	46,861	49,279	51,710	54,320	56,980	59,856	62,904	66,009
		Per Diem	213.01	224	235.05	246.91	259	272.08	285.93	300.05

* Grandfathered
Adopted: 01/16/86
Revised: 05/02/91; 06/06/91; 08/15/91; 10/17/91; 05/21/92; 06/18/92; 10/01/92; 08/05/93; 07/21/94; 08/04/94; 09/15/94; 11/17/94; 01/05/95; 05/04/95; 08/17/95; 01/18/96; 05/16/96; 09/05/96; 09/19/96; 01/16/97; 07/03/97; 10/16/97; 02/19/98; 04/02/98; 08/20/98; 10/01/98; 11/05/98; 12/10/98; '02/18/99; 03/04/99; 06/24/99; 08/05/99; 08/17/00; 05/15/02; 11/07/02; 07/17/03; 03/18/04; 07/07/05; 4/20/06; 06/04/07; 3/20/08; 5/1/08; 6/24/10; 09/09/10; 11/8/10; 4/7/2011; 4/21/11; 09/15/11; 11/3/11; 02/16/12; 03/15/12; 06/07/12; 07/05/12; 08/02/12, 08/16/12; 02/07/13; 05/16/13; 3/20/14; 6/19/14; 02/05/15, 6/4/15, 10/15/15; 5/19/16; 10/20/16; 8/3/17; 12/21/17;10/18/18;2/4/21;6/3/21;9/2/21,5/5/22,6/2/22;9/15/22; 3/2/23, 07/20/23, 8/03/23; 02/01/24; 12/19/24; 5/1/25; **6/18/25**

BURBANK UNIFIED SCHOOL DISTRICT
Purchasing Services

REPORT TO THE BOARD

TO: Members of the Board of Education

FROM : Jason Hasty, Interim Assistant Superintendent of Business Services

PREPARED BY: David Gerharter, Director of Purchasing, Warehouse and Reprographics

SUBMITTED BY: Terri Ramirez-Adams, Senior Administrative Assistant

DATE: May 7, 2026

SUBJECT: Approval of Lease Agreement Circle II / Wells Fargo Vendor Financial Services, LLC

Background:

Burbank Unified School District currently contracts with Sharp Business Systems for the lease of multifunction copiers and printers across all District sites. The existing lease expires on June 30, 2026.

The lease was initially approved on August 1, 2019 in the amount of $396,238.56 per year, and an extension was approved on June 20, 2024 in the amount of $204,895.00 per year.

Discussion:

Cooperative Purchasing Agreements allow the District to utilize contracts that have already been competitively solicited, publicly advertised, evaluated, and awarded by a lead public agency. This approach significantly reduces administrative workload, streamlines procurement timelines, and maintains full compliance with relevant bidding requirements under:

- **BUSD Board Policy BP 3311 – Bids**, which requires competitive bidding for applicable purchases and allows use of piggyback/cooperative contracts when in the District's best interest
- **California Public Contract Code § 20111**, which mandates competitive bidding for school district purchases above statutory thresholds and requires award to the lowest responsible bidder unless a lawful exemption applies

After evaluating multiple contract options through various manufacturers and resellers, Administrative Services is recommending a lease for replacement copiers and printers through Circle II under the NASPO cooperative purchasing agreement #188037. This lease will be service by and payments made to Wells Fargo Vendor Financial Services, LLC.

After an initial assessment of each site and department, the lease is estimated at an annual cost not to exceed $260,000.00, and provides for a complete replacement of all copiers and color desktop printers throughout the district, as well as the replacement of approximately 420 black and white printers used in elementary school classrooms and other key locations.

Fiscal Impact:

Lease expense not to exceed $1,300,000.00 over the lease term (60 months).

Recommendation:

Administrative Services recommends that the Board of Education approve the financial agreement between Burbank Unified School District and Wells Fargo Vendor Financial Services, LLC to acquire copiers and printers under a 60-month fair market value lease, effective July 1, 2026 through June 30, 2031, not to exceed $1,300,000.00 (01.0-00000.0-00000-72000-5611-0000000) and that the authority to sign the agreement be exercised pursuant to BUSD-AR 3314, as presented.

Equipment Schedule

FMV Purchase Option Lease

Wells Fargo Vendor Financial Services, LLC
401 Las Colinas Blvd. W | Bldg. A, 4th Floor | Irving, TX 75039-5400

WELLS FARGO

Equipment Schedule Number dated as of to
Master Agreement Number dated as of

Name and Address of Lessee ("**You**" and "**Your**"):
Burbank Unified School District
1900 West Olive Avenue
Burbank, Ca 91506
Billing Contact Email: dgerharter@busd.org Phone: 818.729-4400

Name and Address of Supplier ("**Supplier**"):
Circle II
32 Waterworks Way
Irvine Ca 92618

"Master Agreement" means that certain master agreement between you and us which has been assigned an account number corresponding to the Master Agreement Number referenced above. **"Schedule"** means this Equipment Schedule. The terms and conditions of the Master Agreement are incorporated into this Schedule, and together, this Schedule and the Master Agreement as it relates to this Schedule, constitute a lease ("**Lease**") between us and you for the Equipment described in this Schedule, provided however, that if the Lessor named above is not the lessor named in the Master Agreement, then, for purposes of the Lease evidenced by this Schedule, all references to the "**lessor**", "**we**" or "**us**" in said Master Agreement shall be deemed to refer to the Lessor named above. **"Payment"** shall mean any "**Payment**" or "**Lease Payment**" as such term is defined in the applicable Master Agreement, and shall be in the amount set forth herein. Capitalized terms used but not defined herein shall have the meanings given to them in the Master Agreement.

Equipment Make, Model, Accessories, Serial Number (SN)
41- Toshiba 4528A, 4- Toshiba 4525AC, 36-Toshiba 5528A, 6- Toshiba 5525AC, 4- Toshiba 9029A
135- Brother HL-8570, 37- Brother MFC EX-575, 11- Brother MFC EX-915DW, 419- Brother HL-EX415DW

☒ **See attached schedule for additional Equipment/Accessories**

Equipment Location:

TERM AND PAYMENT INFORMATION

1. Initial Term (Months): 60 ("Term")	4. Purchase Option Price: **Fair Market Value**
2. Payment: $17,989.39 (plus applicable taxes)	5. Administrative Fee: **$75.00** (will be billed on your first invoice)
3. Payment Period is "Monthly" unless otherwise noted here:	6. Advance Payment (if any): $0.00 Applied To: ☐ First ☐ Last

To help the government fight the funding of terrorism and money laundering activities, U.S. Federal law requires financial institutions to obtain, verify and record information that identifies each person (individuals or businesses) who opens an account. What this means for you: When you open an account or add any additional service, we will ask you for your name, address, federal employer identification number and other information that will allow us to identify you. We may also ask to see other identifying documents.

A. END OF TERM; RETURN PROVISIONS. Provided no default exists hereunder, upon not less than 30 days nor more than 180 days' written notice to us prior to the end of the Term (or Renewal Term), at Lease expiration you will either (1) return the Equipment; or (2) purchase the Equipment AS-IS AND WHERE-IS, WITHOUT ANY RECOURSE TO OR WARRANTY FROM US, EXPRESS OR IMPLIED, for the Purchase Option Price, plus applicable sales and use and other taxes. If you do not purchase or return the Equipment as required herein, this Lease WILL CONTINUE ON A MONTH-TO-MONTH BASIS (each a "**Renewal Term**") and you will continue to pay the same Payments until the first day of the month following the date that the Equipment is received by us in the condition required by this Lease or you pay us the applicable purchase price (plus applicable taxes). Such Payments shall be for the leasing of the Equipment and not be applied to the applicable purchase price. We may terminate such continued leasehold interest upon 30 days' notice to you. If (1) you do not purchase the Equipment at the end of the Term (or Renewal Term), (2) you do not extend the Term (or Renewal Term), or (3) the Lease terminates for default or otherwise, then at your cost you will (i) place the Equipment in good order and condition (except for ordinary wear and tear from normal use), (ii) disassemble, deinstall, inspect, and crate the Equipment in accordance with the manufacturer's recommendations and all regulatory requirements then in effect, and (iii) return the Equipment, freight and insurance prepaid, at your risk to any location we may designate. Any such Equipment will be accompanied by all accessories originally included with the Equipment, qualifies (if applicable) for continued maintenance under a manufacturer's service and maintenance contract, and includes the latest software release provided by the manufacturer or Supplier to you. You will pay us for any loss in value resulting from the failure to maintain the Equipment in accordance with the Lease and for damages incurred in shipping and handling.

B. TAXES. You agree to pay and indemnify and hold us harmless from all sales, use, rental, property, excise, gross receipts, withholding and other taxes, charges and fees upon or with respect to the Equipment or the possession, ownership, leasing, use or operation, control or maintenance thereof and relating to such Lease (or any Payments or other payments), assessed by any governmental entity or taxing authority arising during or with respect to any part of the term, whether due before or after the end of the term shown on the corresponding Schedule. **If you are exempt from sales and use tax, you shall provide us a valid exemption certificate prior to the Commencement Date.** WE WILL FILE ALL PERSONAL PROPERTY TAX RETURNS AND WILL PAY THE APPLICABLE PERSONAL PROPERTY TAXES LEVIED OR ASSESSED THEREON. In states assessing upfront sales and use tax, if you choose to include such tax amount as part of the Lease, your Payment, starting with the first invoice, will be adjusted to reflect such tax as a component of the amount we fund under this Lease. In other states, applicable sales and use tax will be included on your invoice. To the extent any sales or use tax is due on Services or payments therefor, such sales or use tax is not included in the Payment but shall be set forth on your invoices and paid by you as and when the Payment is paid. If the Payment includes amounts for MNS, sales, use, and similar taxes will be charged on the entire Payment amount at the rate applicable to use or rental of the Equipment. In connection with the expiration or earlier termination of a Lease, you agree to pay us any taxes accrued or assessed but not yet due and payable, or our estimate of such amounts. As compensation for our internal and external costs in the administration of taxes related to each unit of Equipment, you agree to pay us a tax administrative fee equal to $12 per unit of Equipment (not to exceed 10 units of Equipment) per year during the Term, not to exceed the maximum permitted by applicable law. You agree that this Lease has been entered into on the assumption that we will be entitled to certain tax benefits available to the owner of the Equipment. You agree to indemnify us for the loss of any income tax benefits caused by your acts or omissions inconsistent with such assumption or the Lease. This indemnity continues beyond the expiration or other cancellation or termination of this Lease.

C. BILLING AND COLLECTION OF SUPPLIER PAYMENTS. You represent that any repair, maintenance and/or services relative to the Equipment ("**Services**") and/or any remote network monitoring and maintenance, network security services or other IT services ("**Managed Network Services**" or "**MNS**") are being provided by the Supplier and will be governed solely by your separate agreement between Supplier and you relating to such Services and/or MNS ("**Service Agreement**"). We are not a party to any Service Agreement, we are not responsible for any such Services or MNS, and we have not made any representations or warranties with respect to such. You acknowledge that (a) we are billing you for such Services and/or MNS on a pass-through basis on behalf of the Supplier; (b) we may rely on information given by Supplier to us relative to the payments due to Supplier under the Service Agreement (which amounts may be amended from time to time between Supplier and you in accordance with the terms of the Service Agreement, the "**Service Payments**") and we are not responsible for the accuracy of such information; (c) if the billing arrangement between Supplier and us has terminated for whatever reason, we will cease invoicing you for the Service Payments and Supplier will be solely responsible for such billing and collection thereafter. If any Equipment is designated "Service Only", you acknowledge and agree that: (1) we do not own such Equipment; (2) we are not providing such Equipment to you pursuant to the terms of this Lease; and (3) the portion of the Payment which relates to such Equipment includes only the full-service maintenance of such Equipment and not the use or rental of such Equipment. You acknowledge that we may (on behalf of Supplier) bill you for any supply freight fee that the Supplier charges for shipping supplies to you. You and the Supplier may add, modify or remove MNS in accordance with your separate agreement with the Supplier and without our consent, provided that such agreement does not modify any other terms of this Lease, including without limitation, amounts payable for rental, lease or use of the Equipment. If the Supplier fails to provide any service or fulfill any other obligation to you, or if you have a dispute with the Supplier regarding the Equipment, any Services (including without limitation, any Equipment designated as "Service Only"), or any MNS, you shall not make any claim against us and shall continue to fully perform under this Lease, including continuing to pay us all Payments and other amounts due under this Lease without deduction, delay, offset or withholding of any amounts. Nothing contained in this Section is intended to limit or waive any rights and warranties extended to you by the Supplier, manufacturer or other third party under the Service Agreement relative to the Services, MNS or other matters or preclude you from exercising any rights or remedies you may have relative thereto.

THE PARTIES INTEND THIS LEASE TO BE A "FINANCE LEASE" UNDER ARTICLE 2A OF THE UNIFORM COMMERCIAL CODE ("UCC"). YOU WAIVE ALL RIGHTS AND REMEDIES CONFERRED UPON A LESSEE BY ARTICLE 2A OF THE UCC. ALL TERMS AND CONDITIONS ON THIS SCHEDULE ARE BINDING UPON THE PARTIES HERETO. To the extent of any conflict or inconsistency between this Schedule and the Master Agreement, this Schedule will prevail, but only with respect to the Lease created hereunder. This Schedule is not binding or effective with respect to the Master Agreement or Equipment until executed on behalf of us and you by authorized representatives.

THIS SCHEDULE INCLUDES THE TERMS ON THE ATTACHED PAGE(S) AND SHALL NOT BE EFFECTIVE UNLESS AND UNTIL EXECUTED BY US.
IN WITNESS WHEREOF, Lessee and Lessor have caused this Schedule to be executed by their duly authorized representatives as of the date first above written.

Lessor: **WELLS FARGO VENDOR FINANCIAL SERVICES, LLC**

Signature of authorized signer

Print Name and Title

Lessee: **Burbank Unified School District**

Signature of authorized signer

Print Name and Title

Federal Tax ID

State and Local Government Addendum

Agreement Number dated as of **, 20**

Name and Address of Customer ("You" and "Your"):
Burbank Unified School District
1900 West Olive Avenue
Burbank, Ca 91506

This Addendum (this "Addendum") between the above-referenced customer ("Customer") and ("Company") is made and entered into as of the date of the financing arrangement corresponding to the account number set forth above (the "Agreement").

1. INCORPORATION AND EFFECT. This Addendum is hereby made a part of, and incorporated into, the Agreement as though fully set forth therein. As modified or supplemented by the terms set forth herein, the provisions of the Agreement shall remain in full force and effect, provided that, in the event of a conflict between any provision of this Addendum and any provision of the Agreement, the provision of this Addendum shall control.

2. GOVERNMENTAL PROVISIONS. Customer hereby represents, warrants and covenants to Company that: (a) Customer intends, subject only to the provisions of this Addendum, to remit to Company all sums due and to become due under the Agreement for the full term; (b) Customer's governing body has appropriated sufficient funds to pay all payments and other amounts due during Customer's current fiscal period; (c) Customer reasonably believes that legally available funds in an amount sufficient to make all payments for the full term of the Agreement can be obtained; and (d) Customer intends to do all things lawfully within its power to obtain and maintain funds from which payments due under the Agreement may be made, including making provision for such payments to the extent necessary in each budget or appropriation request submitted and adopted in accordance with applicable law. If Customer's governing body fails to appropriate sufficient funds to pay all payments and other amounts due and to become due under the Agreement in Customer's next fiscal period ("Non-Appropriation"), then (i) Customer shall promptly notify Company of such Non-Appropriation, (ii) the Agreement will terminate as of the last day of the fiscal period for which appropriations were received, and (iii) Customer shall return the Equipment to Company pursuant to the terms of the Agreement. Customer's obligations under the Agreement shall constitute a current expense and shall not in any way be construed to be a debt in contravention of any applicable constitutional or statutory limitations or requirements concerning Customer's creation of indebtedness or require voter approval, nor shall anything contained herein constitute a pledge of Customer's general tax revenues, funds or monies. Customer further represents, warrants and covenants to Company that: (a) Customer has the power and authority under applicable law to enter into the Agreement and this Addendum and the transactions contemplated hereby and thereby and to perform all of its obligations hereunder and thereunder, (b) Customer has duly authorized the execution and delivery of the Agreement and this Addendum by appropriate official action of its governing body and has obtained such other authorizations, consents and/or approvals as are necessary to consummate the Agreement and this Addendum, (c) all legal and other requirements have been met, and procedures have occurred, to render the Agreement and this Addendum enforceable against Customer in accordance with their respective terms, and (d) Customer has complied with all public bidding requirements applicable to the Agreement and this Addendum and the transactions contemplated hereby and thereby.

3. LIMITATIONS. The parties intend that the collection of any damages, the exercise of any remedy, the enforceability of any indemnity, and any requirements of Customer relative to Non-Appropriation set forth in the Agreement or in this Addendum are subject to any limitations imposed by applicable law. To the extent Company's remedies for a Customer default under the Agreement include any right to accelerate amounts to become due under the Agreement, such acceleration shall be limited to amounts to become due during Customer's then current fiscal period.

4. CHOICE OF GOVERNING LAW. Notwithstanding anything in the Agreement to the contrary, the Agreement and this Addendum shall be governed by, construed and enforced in accordance with the laws of the state in which Customer is located and the parties agree to the non-exclusive jurisdiction and venue of the state and federal courts in such state.

5. MISCELLANEOUS. This Addendum, together with the provisions of the Agreement not expressly inconsistent herewith, constitutes the entire agreement between the parties with respect to the matters addressed herein, and shall supersede all prior oral or written negotiations, understandings and commitments regarding such matters. Company may in its sole discretion, accept a photocopy, electronically transmitted, facsimile or other reproduction of this Addendum as the binding and effective record of this Addendum whether or not an ink signed copy hereof is also received by Company from Customer.

IN WITNESS WHEREOF, Customer and Company have caused this Addendum to be executed by their duly authorized representatives as of the date first above written.

Company:

By: Date:

Print Name and Title:

Customer: **Burbank Unified School District**

By: Date:

Print Name and Title:

Equipment Schedule 01

Printer / Copier Model	Part Number	Quantity	NASPO Contract Pricing (60 month)	Total per Month	CIRCLE Contract Pricing (60 month)	Total per Month	Difference per Unit	Total Savings per Month
Brother HL-EX415DW	HL-EX415DW	419	$ 51.79	$ 21,700.01	$ 9.18	$ 3,846.42	$ (42.61)	$ (17,853.59)
Brother MFC EX915DW	MFC EX915DW	11	$ 66.72	$ 733.92	$ 14.50	$ 159.50	$ (52.22)	$ (574.42)
Brother MFC EX-575 (Brother MFC-L9570CDW replacement)	MFC EX-575	37	$ 22.20	$ 821.40	$ 16.00	$ 592.00	$ (6.20)	$ (229.40)
Brother HL-8570 (HL-L9310CDW replacement)	HL-8570	135	$ 30.39	$ 4,102.65	$ 12.72	$ 1,717.20	$ (17.67)	$ (2,385.45)
Toshiba 4525AC	4525AC	4	$ 132.92	$ 531.68	$ 60.12	$ 240.48	$ (72.80)	$ (291.20)
Toshiba 4528A	4528A	41	$ 73.46	$ 3,011.86	$ 60.12	$ 2,464.92	$ (13.34)	$ (546.94)
Toshiba 5525AC	5525AC	6	$ 130.02	$ 780.12	$ 71.04	$ 426.24	$ (58.98)	$ (353.88)
Toshiba 5528A	5528A	36	$ 83.87	$ 3,019.32	$ 71.04	$ 2,557.44	$ (12.83)	$ (461.88)
Toshiba 9029A	9029A	4	$ 249.71	$ 998.84	$ 210.77	$ 843.07	$ (38.94)	$ (155.77)
				$ 35,699.80		**$ 12,847.27**		**$ (22,852.53)**
Toshiba Accessories								
4528A,4525AC,5528A,5525AC Accessories								
POWER FILTER	W2250-15-121	86	$ 9.29	$ 798.94	$ 7.43	$ 639.15	$ (1.86)	$ (159.79)
DOCUMENT FEEDER, DUAL SCAN	MR4010	86	$ 14.52	$ 1,248.72	$ 11.62	$ 998.98	$ (2.90)	$ (249.74)
LARGE CAPACITY FEEDER, 2000 SHEETS	KD1073LT	86	$ 7.92	$ 681.12	$ 6.34	$ 544.90	$ (1.58)	$ (136.22)
BRIDGE KIT FOR MJ1109/1110	KN5005	85	$ 1.60	$ 136.00	$ 1.28	$ 108.80	$ (0.32)	$ (27.20)
50-SHEET INNER FINISHER (FITS UP TO 45PPM MODELS ONLY)	MJ1048	1	$ 11.32	$ 11.32	$ 9.06	$ 9.06	$ (2.26)	$ (2.26)
65-SHEET MULTI-STAPLE FINISHER	MJ1113	85	$ 14.67	$ 1,246.95	$ 11.96	$ 1,016.60	$ (2.71)	$ (230.35)
HOLEPUNCH FOR MJ1048	MJ6011	1	$ 5.17	$ 5.17	$ 4.14	$ 4.14	$ (1.03)	$ (1.03)
HOLEPUNCH FOR MJ1113/1114	MJ6107N	85	$ 5.43	$ 461.55	$ 4.34	$ 369.24	$ (1.09)	$ (92.31)
Fax Unit / 2nd Line Fax Unit	GD1370N	25	$ 6.99	$ 174.75	$ 5.59	$ 139.80	$ (1.40)	$ (34.95)
INSTALLATION		86	$ 10.05	$ 864.30	$ 8.00	$ 688.00	$ (2.05)	$ (176.30)
				$ 5,628.82		**$ 4,518.66**		**$ (1,110.16)**
9029 Accessories								
POWER FILTER	W2250-15-121	4	$ 9.29	$ 37.16	$ 7.43	$ 29.73	$ (1.86)	$ (7.43)
65-SHEET MULTI-STAPLE FINISHER	MJ1115	4	$ 20.51	$ 82.04	$ 16.41	$ 65.63	$ (4.10)	$ (16.41)
FINISHER RAIL	KN1103	4	$ 0.51	$ 2.04	$ 0.41	$ 1.63	$ (0.10)	$ (0.41)
LCF CONNECTOR (FOR EXTERNAL LCF)	KN9000	1	$ 2.14	$ 2.14	$ 1.71	$ 1.71	$ (0.43)	$ (0.43)
EXTERNAL LARGE CAPACITY FEEDER (2,500 SHEETS)	MP2503L	1	$ 11.47	$ 11.47	$ 9.18	$ 9.18	$ (2.29)	$ (2.29)
INSTALLATION		4	$ 10.05	$ 40.20	$ 8.00	$ 32.00	$ (2.05)	$ (8.20)
				$ 175.05		**$ 139.88**		**$ (35.17)**
Brother Accessories								
EX-575 Tray (9570 Equivalent)	TT4000	1	$ 4.22	$ 4.22	$ 3.80	$ 3.80	$ (0.42)	$ (0.42)
EX-575 Stand (9570 Equivalent)	CB1010	1	$ 6.93	$ 6.93	$ 6.24	$ 6.24	$ (0.69)	$ (0.69)
HL-8570 Extra Tray (Tray 9310 equivalent)	LT 340CL	1	$ 4.82	$ 4.82	$ 4.34	$ 4.34	$ (0.48)	$ (0.48)
EX-575 Installation	INSTALLATION2	37	$ 4.22	$ 156.14	$ 1.90	$ 70.30	$ (2.32)	$ (85.84)
MFC EX915DW Installation	INSTALLATION2	11	$ 4.22	$ 46.42	$ 1.90	$ 20.90	$ (2.32)	$ (25.52)
HL-8570 Installation	INSTALLATION3	135	$ 4.22	$ 569.70	$ 1.90	$ 256.50	$ (2.32)	$ (313.20)
HL-EX415DW Installation	INSTALLATION2	419	$ 4.22	$ 1,768.18	$ 0.29	$ 121.51	$ (3.93)	$ (1,646.67)
				$ 2,556.41		**$ 483.58**		**$ (2,072.83)**
			NASPO TOTAL	**$ 44,060.08**	**Circle Total**	**$ 17,989.39**	**Total Savings**	**$ (26,070.69)**

DocuSign Envelope ID: C764E410-020D-4DE5-99C8-4C5B8EF55B29

NASPO ValuePoint Master Agreement Terms and Conditions

For Multi-Function Devices and Related Software, Services and Cloud Solutions

A Contract for the NASPO ValuePoint Cooperative Purchasing Program
Acting by and through the **State of Colorado** (Lead State)

Department of Personnel & Administration
State Purchasing & Contracts Office
1525 Sherman Street, 5th Floor
Denver, Co 80203

And

Toshiba America Business Solutions, Inc.
25530 Commercentre Drive
Lake Forest, CA 92630

Master Agreement Number: 188037

DocuSign Envelope ID: C764E410-020D-4DE5-99C8-4C5B8EF55B29

Contents

MASTER AGREEMENT TERMS AND CONDITIONS 4
I. Definitions 4
II. Parties and Term of the Master Agreement 8
III. Order of Precedence 9
IV. Participants and Scope 9
V. NASPO ValuePoint Provisions 11
VI. Pricing, Payment & Leasing 14
VII. Ordering 15
VIII. Shipping and Delivery 18
IX. Inspection and Acceptance 19
X. Warranty 20
XI. Equipment Title 22
XII. Indemnification 22
XIII. Insurance 23
XIV. General Provisions 25
SIGNATURE PAGE 31
EXHIBIT A – STATEMENT OF WORK 32
I. Product Overview 32
II. Master Agreement Deliverables 33
III. Purchase and Lease Programs 43
IV. Contractor Responsibilities and Tasks 49
EXHIBIT B – SAMPLE D&A CERTIFICATE 58
EXHIBIT C – AUTHORIZED DEALER FORM 59
EXHIBIT D – AUTHORIZED DEALERS BY STATE 60
ATTACHMENT 1 – TOSHIBA LEASE AGREEMENT TERMS AND CONDITIONS 61
ATTACHMENT 2 – TOSHIBA SERVICE LEVEL AGREEMENT 65
ATTACHMENT 3 – TOSHIBA MAINTENANCE AGREEMENT 67
ATTACHMENT 4 – TOSHIBA $1 BUYOUT LEASE ADDENDUM 69
ATTACHMENT 5 – TOSHIBA LEASE ORDER FORM 70
ATTACHMENT 6 – TOSHIBA LEASE ORDER FORM SCHEDULE 71
ATTACHMENT 7 – TOSHIBA AMENDMENT TO OPT OUT 72
ATTACHMENT 8 – TOSHIBA OPINION OF COUNSEL 73
ATTACHMENT 9 – TOSHIBA M&S ACTIVATION FOR PURCHASED EQUIPMENT 74
ATTACHMENT 10 – TOSHIBA SAMPLE MPS STATEMENT OF WORK 76
ATTACHMENT 11 – TOSHIBA ASSET RELOCATION REQUEST FORM 80
ATTACHMENT 12 – TOSHIBA FLEET MONITORING TOOL SITE SURVEY 81

DocuSign Envelope ID: C764E410-020D-4DE5-99C8-4C5B8EF55B29

ATTACHMENT 13 – TOSHIBA EMETERS ONLINE INFORMATION AND INSTRUCTIONS.....84
ATTACHMENT 14 – TOSHIBA STATEMENT OF SERVICES.....85
ATTACHMENT 15 – TOSHIBA SAAS STATEMENT OF SERVICES 90
ATTACHMENT 16 – TOSHIBA ON-PREMISES STATEMENT OF SERVICES.....92
ATTACHMENT 17 – TOSHIBA HYBRID STATEMENT OF SERVICES 95
ATTACHMENT 18 – TOSHIBA MASTER SOFTWARE AND SERVICES AGREEMENT 97

MASTER AGREEMENT TERMS AND CONDITIONS

I. Definitions

1.1 **A3 MFD** - A Multi-function Device which is designed to handle letter, legal, ledger and some smaller paper sizes, such as postcards and envelopes.

1.2 **A4 MFD –** A Multi-function Device which is designed to handle letter, legal and some smaller paper sizes, such as postcards and envelopes. Ledger size paper is NOT an option on this Device.

1.3 **Acceptance** - A written notice from a Purchasing Entity to Contractor advising Contractor that the Device has passed its Acceptance Testing. Acceptance of a Product for which Acceptance Testing is not required shall occur following the completion of delivery, installation, if required, and a reasonable time for inspection of the Product, unless the Purchasing Entity provides a written notice of rejection to Contractor, as set forth in **section IX** of this Master Agreement.

1.4 **Accessory** – A compatible item that is added to the Base Unit to enhance its capabilities and functions.

1.5 **Attachment** – Contractor's Supplemental Documents which consist of the following:

1.5.1 Attachment 1 – Toshiba Lease Agreement Terms and Conditions

1.5.2 Attachment 2 – Toshiba Service Level Agreement

1.5.3 Attachment 3 – Toshiba Maintenance Agreement

1.5.4 Attachment 4 – Toshiba $1 Buyout Lease Addendum

1.5.5 Attachment 5 – Toshiba Lease Order Form

1.5.6 Attachment 6 – Toshiba Lease Order Form Schedule

1.5.7 Attachment 7 – Toshiba Amendment to Opt Out

1.5.8 Attachment 8 – Toshiba Opinion of Counsel

1.5.9 Attachment 9 – Toshiba M&S Activation for Purchased Equipment

1.5.10 Attachment 10 – Toshiba Sample MPS Statement of Work

1.5.11 Attachment 11 – Toshiba Asset Relocation Request Form

1.5.12 Attachment 12 – Toshiba Fleet Monitoring Tool Site Survey

1.5.13 Attachment 13 – Toshiba eMeters Online Information and Instructions

1.5.14 Attachment 14 – Toshiba Statement of Services

1.5.15 Attachment 15 – Toshiba SaaS Statement of Services

1.5.16 Attachment 16 – Toshiba On-Premises Statement of Services

1.5.17 Attachment 17 – Toshiba Hybrid Statement of Services

1.5.18 Attachment 18 – Toshiba Master Software and Services Agreement

1.6 **Authorized Dealer** – The Manufacturer's authorized sales and Service center (also known as a Dealer, Distributor, or Partner) that must be certified by the Manufacturer to sell the Manufacturer's Products and perform machine installation and maintenance on Devices offered by the Manufacturer. A Purchasing Entity must be able to, at a minimum, visit the

DocuSign Envelope ID: C764E410-020D-4DE5-99C8-4C5B8EF55B29

sales and service center to view and test Device.

1.7 **Base Unit** - The copier, printer, Scanner, Large/Wide Format and Production Devices that include all standard Accessories and parts and excludes optional Accessories and/or software.

1.8 **Blended Rate** - A rate that is derived by taking the b&w and color cost per click rates on one or more Devices and calculating one rate that a customer will be billed for all copies, regardless of Device type and b&w or color output. Allows for simplicity when billing copies run.

1.9 **Bronze Standard** - Devices which meet less than 50% of the 28 optional EPEAT criteria.

1.10 **Business Day** – Any day other than Saturday, Sunday, or a legal holiday.

1.11 **Buyout to Keep** - The early termination option on an FMV or Capital Lease that involves the acquisition of the Device by the Purchasing Entity, and consists of any current and past due amount, plus the remaining stream of Device Payments.

1.12 **Buyout to Return** - The early termination option on an FMV, Capital or Straight Lease that involves the return of the Device by the Purchasing Entity to Contractor, in good working condition (ordinary wear and tear excepted), and consists of any current and past due amounts, plus the remaining stream of Device Payments.

1.13 **Capital Lease** - For the purposes of this Master Agreement, a Capital Lease shall also be referred to as a $1 Buyout Lease and title of the Device will automatically pass from the Contractor to the Purchasing Entity at the end of the Initial Lease Term, and the Purchasing Entity will not be subject to additional payments in order to assume ownership. However, it will be at the discretion of the Participating State or Entity as to whether other criteria will also be considered, such as a bargain purchase option, a lease term longer than 75% of the estimated economic life of the Device, or the present value of the lease payments is greater than 90% of the fair market value of the Device at the beginning of the Initial Lease Term, or any other legal requirements relating to a Capital Lease.

1.14 **Ceiling Pricing** - Pricing that is established as a “not-to-exceed” amount; the maximum price Contractor may charge for Products, Services, and Supplies.

1.15 **Contractor** - A party to this Master Agreement, whether a person or entity, that delivers goods or performs services under the terms set forth in this Master Agreement.

1.16 **Coterminous** - Two or more leases that end at the same time. The original lease payment is modified to reflect the addition of a new Device or Accessory. The original term of the lease is not modified as a result of a Coterminous addition.

1.17 **Deliverable** - A Product, Service, solution, result, labor, or other effort being sought through this RFP.

1.18 **Device** - The Base Unit, either with or without optional Accessories and/or software. May also be referred to as “Equipment.”

1.19 **Device Downtime** - The period of time that a Device is not operational and is waiting for Service to be completed.

1.20 **Device Payment** - The Device portion of the payment, less any Service, Supplies, and maintenance.

1.21 **Device Trade-In** - An agreed upon transaction between the Purchasing Entity and Contractor, in which Contractor takes ownership of Purchasing Entity’s owned Device, often for a discounted amount.

DocuSign Envelope ID: C764E410-020D-4DE5-99C8-4C5B8EF55B29

1.22 **Device Upgrade or Downgrade** - A replacement of the Purchasing Entity's existing leased Device, with a different Device, of either greater or lesser value. A new lease is then originated for the new Device, with the remaining lease payments on the old Device wrapped into it. The old lease is closed out, and the Device is returned to Contractor.

1.23 **Electronic Product Environmental Assessment Tool (EPEAT)** - A tool which evaluates and selects Device according to a list of preferred environmental attributes. EPEAT registered means Devices meet the 1680.2 IEEE Standard for Environmental Assessment of Imaging Device, as amended.

1.24 **Embedded Software** - One or more software applications which permanently reside on a computing Device.

1.25 **Energy Star** - The U.S. Environmental Protection Agency's standard for energy efficiency.

1.26 **Fair Market Value (FMV) Lease** - A lease in which the Purchasing Entity can either 1) Take title to the Device at the end of the Initial Lease Term by paying the residual value to Contractor, 2) Enter into a Renewal Term for the Device, or 3) Return the Device to Contractor at the end of the Initial Lease Term.

1.27 **Free on Board (FOB) Destination** - Contractor is responsible for transportation and handling charges and the sale does not occur until the Products arrive at the Purchasing Entity's specified location.

1.28 **Group** - The classification for the different types of Devices solicited in this RFP. Groups are determined by the Devices primary functions and/or capabilities.

1.29 **Initial Lease Term** - The length of time (i.e. 12, 18, 24, 36, 48, or 60 months) that a Purchasing Entity enters into a lease agreement.

1.30 **Intellectual Property** - Any and all patents, copyrights, service marks, trademarks, trade secrets, trade names, patentable inventions, or other similar proprietary rights, in tangible or intangible form, and all rights, title, and interest therein.

1.31 **Large/Wide Format Equipment** - A Device that prints on a large paper via a variety of output options.

1.32 **Lead State -** The State centrally administering any resulting Master Agreement(s) who is a party to this Master Agreement.

1.33 **Legacy Device** – A Device that was purchased or leased, either under a prior NASPO ValuePoint or WSCA Master Agreement, another program, or via any other means.

1.34 **Maintenance Agreement** - An agreement in which the Contractor provides monthly Service, parts, Supplies, and Preventative Maintenance on purchased or leased Devices.

1.35 **Managed Print Services (MPS)** - The management, service, and support of the Purchasing Entity's entire enterprise and output infrastructure of printed materials, with the objective of creating a solution that improves the print process and reduces the expense of printed material.

1.36 **Manufacturer** - A company that, as its primary business function, designs, assembles, and owns the trademark/patent and markets a Device. Also referred to as Contractor.

1.37 **Manufacturer's Suggested Retail Price (MSRP)** - The list price or recommended retail price of a Product in which the Manufacturer recommends that the retailer sell the Product.

1.38 **Master Agreement** - The underlying agreement executed by and between the Lead State, acting in cooperation with NASPO ValuePoint, and the Contractor, as now or hereafter amended.

DocuSign Envelope ID: C764E410-020D-4DE5-99C8-4C5B8EF55B29

1.39 **Multi-function Device (MFD)** - A Device which incorporates the functionality of multiple Devices into one, such as print, fax, copy and scan. Each feature can work independently of the other.

1.40 **NASPO ValuePoint** - A division of the National Association of State Procurement Officials ("NASPO"), a 501(c)(3) corporation. NASPO ValuePoint facilitates administration of the NASPO cooperative group contracting consortium of state chief procurement officials for the benefit of state departments, institutions, agencies, and political subdivisions and other eligible entities (i.e., colleges, school districts, counties, cities, some nonprofit organizations, etc.) for all states, the District of Columbia, and territories of the United States. NASPO ValuePoint is identified in the Master Agreement as the recipient of reports and may perform contract administration functions relating to collecting and receiving reports, as well as other contract administration functions as assigned by the Lead State.

1.41 **Newly Manufactured** - Devices that have not been Refurbished, Remanufactured, rented, leased, sold, or used in a demonstration, and are currently being marketed by the Manufacturer.

1.42 **Normal Business Hours** – Defined as the hours between 8AM and 5PM, Monday through Friday, holidays excluded.

1.43 **Not Specifically Priced (NSP)** - NSP items enhance or compliment the Device but are not listed in the Master Agreement Price List(s). NSP's may include Coin-Op Equipment, empowering software etc.

1.44 **OEM** – The Original Equipment Manufacturer.

1.45 **Order** - Any type of encumbrance document or commitment voucher, including, but not limited to, a purchase order, contract, MPS statement of work, Maintenance Agreement, lease agreement, etc. used by a Purchasing Entity to order the Products and Services.

1.46 **Participating Addendum –** A bilateral agreement executed by a Contractor and a Participating Entity incorporating this Master Agreement and any additional Participating Entity-specific language or other requirements (*e.g.*, ordering procedures specific to the Participating Entity, entity-specific terms and conditions, etc.).

1.47 **Participating Entity -** A state (as well as the District of Columbia and US territories), city, county, district, other political subdivision of a State, or a nonprofit organization under the laws of some states properly authorized to enter into a Participating Addendum, that has executed a Participating Addendum.

1.48 **Participating State** - A state that has executed a Participating Addendum or has indicated an intent to execute a Participating Addendum.

1.49 **Power Filter** - An electronic filter which is placed between an external power line and a Device for the purpose of removing frequencies or electromagnetic interference.

1.50 **Preventative Maintenance** - The servicing of a Device for the purpose of maintaining a satisfactory operating condition by providing systematic inspection, detection, and correction of failures either before they occur or before they develop into major defects.

1.51 **Private Label** - Devices that are manufactured by one company and sold under a retailer's brand name.

1.52 **Product** – Devices, Accessories, parts, software, and/or Supplies provided by Contractor pursuant to the Master Agreement.

1.53 **Published Price** – The price that is posted on the Manufacturer's website or in their pricing literature (e.g. not the Master Agreement contract price).

DocuSign Envelope ID: C764E410-020D-4DE5-99C8-4C5B8EF55B29

1.54 **Purchasing Entity** - A state (as well as the District of Columbia and US territories), city, county, district, other political subdivision of a State, or a nonprofit organization under the laws of some states if authorized by a Participating Addendum, that issues a Purchase Order against the Master Agreement and becomes financially committed to the purchase.

1.55 **Refurbished** - A Device which has received extensive maintenance and/or minor repair, including the replacement of all standard parts subject to wear during the normal course of use. For the purpose of this RFP and resulting Master Agreement(s), Refurbished Device shall not have more than 750,000 original copies on it. In addition, Refurbished Device must only contain OEM parts. Refurbished Device must be certified by the Manufacturer.

1.56 **Remanufactured** - The process of disassembling Devices known to be worn or defective that can be reused or brought up to OEM specification by cleaning, repairing or replacing it in a manufacturing environment and then reassembling and testing it, so that it will operate like a new Device. Remanufactured Device must be certified by the Manufacturer.

1.57 **Renewal Term** - A lease term that supersedes the Initial Lease Term, and which a Purchasing Entity may enter into upon thirty (30) days prior written notice to Contractor. Each Renewal Term shall not exceed 12 months, the residual value of the Device, or the Useful Life of the Device. Capital Leases are excluded from going into renewal.

1.58 **Response Time** - The time from when the original Service Call is placed with the Contractor or Authorized Dealer, to when the Service technician arrives at the Purchasing Entity's location.

1.59 **Segment** - The various speeds that Devices are categorized by.

1.60 **Services** – The labor required to be performed by Contractor pursuant to the Master Agreement or an Order. Services may include, but are not limited to, maintenance, MPS and software installation.

1.61 **Service Base Location** - The place of business where the Contractor or Authorized Dealer stores parts and provides training for service technicians.

1.62 **Service Call** - An on-site Service technician visit due to Device error or malfunction.

1.63 **Single-function Printer** - An inkjet or laser Device that only prints and is not capable of other functions such as copying, faxing or scanning.

1.64 **Straight Lease** - A type of agreement in which ownership is not an option and the Total Monthly Payment amount remains firm throughout the Initial Term.

1.65 **Supplemental Documents** – With the exception of software, end-user and click-wrap agreements, Contractor's Supplemental Documents are the only authorized documents under this Master Agreement and are attached hereto as Attachments.

1.66 **Supplies** - Consumable items that gets used up or are discarded once used, such as ink cartridges.

1.67 **Third Party** – A person or entity that may be directly involved, but is not a principal to an arrangement, contract, deal, lawsuit, or transaction.

1.68 **Total Monthly Payment** - The Device portion of the payment, as well as any Service, Supplies or maintenance, and less any applicable taxes.

1.69 **Useful Life** - Period during which a Device is expected to be usable for the purpose in which it was manufactured.

II. Parties and Term of the Master Agreement

2.1 Parties. This Master Agreement is entered into by and between the State of Colorado, acting by and through the Department of Personnel & Administration, State Purchasing & Contracts Office (hereinafter called the "Lead State"), and Toshiba America Business Solutions, Inc. (hereinafter called "Contractor"), for the procurement of A3 MFD's, A4 MFD's, Single-function Printers, Large/Wide Format Equipment, Software, Consumable Supplies, Managed Print Services, Software Related Services (including cloud-based offerings and web-based fleet management tools), and Specialty Printers as approved per this Master Agreement, for the benefit of Participating States, Entity's, and Purchasing Entities. The Contractor and the Lead State agree to the terms and conditions contained herein.

2.2 Initial Term. The initial term of this Master Agreement is for two (2) years, with an effective date of August 1, 2024. The term of this Master Agreement may be amended beyond the initial term for up to three (3) consecutive one (1) year additional terms, upon the mutual agreement of the Lead State and Contractor, by written Amendment. The total duration of the Master Agreement, including any extensions, shall not exceed five (5) years.

2.3 Amendment Limitations. The terms of this Master Agreement will not be waived, altered, modified, supplemented, or amended in any manner whatsoever without prior written agreement of the Lead State and Contractor.

III. Order of Precedence

3.1 Order. This Master Agreement will consist of the following documents:

3.1.1 A Participating Entity's Participating Addendum ("PA"), including its Attachments and Exhibits;

3.1.2 NASPO ValuePoint Master Agreement, including all Exhibits;

3.1.3 An Order issued against the Master Agreement;

3.1.4 The Solicitation, RFP-NP-23-001, Multi-Function Devices and Related Software, Services and Cloud Solutions;

3.1.5 Contractor's response to the Solicitation, as revised (if permitted) and accepted by the Lead State; and

3.1.6 Contractor's Supplemental Documents, which are included as Attachments.

3.2 Conflict. These documents will be read to be consistent and complementary. Any conflict among these documents will be resolved by giving priority to these documents in the order listed above. Contractor terms and conditions that apply to this Master Agreement are only those that are expressly accepted by the Lead State and must be in writing and attached to this Master Agreement as an Exhibit or Attachment.

3.3 Participating Addenda. Participating Addenda will not be construed to diminish, modify, or otherwise derogate any provisions in this Master Agreement between the Lead State and Contractor. Participating Addenda will not include a term of agreement that exceeds the term of the Master Agreement, nor will it include Products and Services not awarded under the Master Agreement.

IV. Participants and Scope

4.1 Requirement for a Participating Addendum. Contractor may not deliver Products under this Master Agreement until a Participating Addendum acceptable to the Participating Entity and Contractor is executed.

DocuSign Envelope ID: C764E410-020D-4DE5-99C8-4C5B8EF55B29

4.2 Applicability of Master Agreement. NASPO ValuePoint Master Agreement Terms and Conditions are applicable to any Order by a Participating Entity (and other Purchasing Entities covered by their Participating Addendum), except to the extent altered, modified, supplemented or amended by a Participating Addendum, subject to **section III**. For the purposes of illustration and not limitation, this authority may apply to unique delivery and invoicing requirements, confidentiality requirements, defaults on Orders, governing law and venue relating to Orders by a Participating Entity, indemnification, and insurance requirements. Statutory or constitutional requirements relating to availability of funds may require specific language in some Participating Addenda in order to comply with applicable law. The expectation is that these alterations, modifications, supplements, or amendments will be addressed in the Participating Addendum or, with the consent of the Purchasing Entity and Contractor, may be included in the ordering document (*e.g.*, purchase order or contract) used by the Purchasing Entity to place the Order.

4.3 Authorized Use. Use of specific NASPO ValuePoint Master Agreements by state agencies, political subdivisions and other Participating Entities is subject to applicable state law and the approval of the respective State Chief Procurement Official. Issues of interpretation and eligibility for participation are solely within the authority of the respective State Chief Procurement Official.

4.4 Obligated Entities. Obligations under this Master Agreement are limited to those Participating Entities who have signed a Participating Addendum and Purchasing Entities within the scope of those Participating Addenda. States or other entities permitted to participate may use an informal competitive process to determine which Master Agreements to participate in through execution of a Participating Addendum. Participating Entities incur no financial obligations on behalf of other Purchasing Entities.

4.5 Notice of Participating Addendum. Contractor shall email a fully executed PDF copy of each Participating Addendum to pa@naspovaluepoint.org to support documentation of participation and posting in appropriate databases.

4.6 Eligibility for a Participating Addendum. Eligible entities who are not states may under some circumstances sign their own Participating Addendum, subject to the consent of the Chief Procurement Official of the state where the entity is located. Coordinate requests for such participation through NASPO ValuePoint. Any permission to participate through execution of a Participating Addendum is not a determination that procurement authority exists; the entity must ensure that they have the requisite procurement authority to execute a Participating Addendum.

4.7 Prohibition on Resale. Subject to any specific conditions included in the solicitation or Contractor's proposal as accepted by the Lead State, or as explicitly permitted in a Participating Addendum, Purchasing Entities may not resell Products purchased under this Master Agreement. Absent any such condition or explicit permission, this limitation does not prohibit: payments by employees of a Purchasing Entity for Products; sales of Products to the general public as surplus property for non-leased Equipment; and fees associated with inventory transactions with other governmental or nonprofit entities and consistent with a Purchasing Entity's laws and regulations. Any sale or transfer permitted by this subsection must be consistent with license rights granted for use of intellectual property.

4.8 Individual Customers. Except as may otherwise be agreed to by the Purchasing Entity and Contractor, each Purchasing Entity shall follow the terms and conditions of the Master Agreement and applicable Participating Addendum and will have the same rights and responsibilities for their purchases as the Lead State has in the Master Agreement and as

the Participating Entity has in the Participating Addendum, including but not limited to any indemnity or right to recover any costs as such right is defined in the Master Agreement and applicable Participating Addendum for their purchases. Each Purchasing Entity will be responsible for its own charges, fees, and liabilities. The Contractor will apply the charges and invoice each Purchasing Entity individually.

4.9 Release of Information. Throughout the duration of this Master Agreement, Contractor must secure from the Lead State prior approval for the release of information that pertains to the potential work or activities covered by the Master Agreement. This limitation does not preclude publication about the award of the Master Agreement or marketing activities consistent with any proposed and accepted marketing plan.

4.10 No Representations. The Contractor shall not make any representations of NASPO ValuePoint, the Lead State, any Participating Entity, or any Purchasing Entity's opinion or position as to the quality or effectiveness of the services that are the subject of this Master Agreement without prior written consent.

V. NASPO ValuePoint Provisions

5.1 Applicability. NASPO ValuePoint is not a party to the Master Agreement. The terms set forth in **section V** are for the benefit of NASPO ValuePoint as a third-party beneficiary of this Master Agreement.

5.2 Administrative Fees

5.2.1 NASPO ValuePoint Fee. Contractor shall pay to NASPO ValuePoint, or its assignee, a NASPO ValuePoint Administrative Fee of one-quarter of one percent (0.25% or 0.0025) no later than sixty (60) days following the end of each calendar quarter. The NASPO ValuePoint Administrative Fee must be submitted quarterly and is based on all sales of products and services under the Master Agreement (less any charges for taxes or shipping). The NASPO ValuePoint Administrative Fee is not negotiable. This fee is to be included as part of the pricing submitted with a vendor's response to the Lead State's solicitation.

5.2.1.1 Contractor will report on all Usage Based Equipment sales, and on Usage Based or Life Cycle Service and Supply sales. This method will no longer require the Contractor to capture the actual Service and Supply revenues that are billed to the customer each month.

5.2.1.2 Industry research has shown close to a 1:1 ratio between sales price on a piece of Equipment and the actual amount of Service and Supply costs required to operate that Equipment over its Useful Life. Therefore, to simplify the reporting process and remove the burden to capture the actual Service and Supply costs, the Contractor may report as follows:

5.2.1.2.1 Purchased Equipment: Contractor shall report the actual amount invoiced (less any taxes) for all Equipment sold under the reporting period (calendar quarter). In addition, the Contractor shall report an additional amount equal to the invoice amount and identified as "Life Cycle Service and Supplies," or an actual amount and identified as "Usage Based Service and Supplies," providing the customer elects to enter into a Maintenance Agreement. Thus, in the Contractor's Detailed Sales Report, for each item sold, there will be two-line items: one for the piece of Equipment, and one for the Life Cycle or

Usage Based Service and Supplies. The amount reflected for the Life Cycle Service and Supplies must be equal to the amount of the Equipment.

5.2.1.2.2 Leased Equipment: Contractor may report sales according to the Purchased Equipment methodology described above, or they may report the actual amount invoiced (less any taxes) for the lease during the reporting period (calendar quarter). In addition, the Contractor shall report an additional amount equal to the invoice amount and identified as "Life Cycle Service and Supplies," or an actual amount and identified as "Usage Based Service and Supplies." Thus, in the Contractor's Detailed Sales Report, for each item leased, there will be two-line items: one for the invoice amount to the customer for the Equipment, and one for the Life Cycle or Usage Based Service and Supplies. The amount reflected for the Life Cycle Service and Supplies must be equal to the amount of the invoiced Equipment.

5.2.2 State Imposed Fees. Some states may require an additional fee be paid by Contractor directly to the state on purchases made by Purchasing Entities within that state. For all such requests, the fee rate or amount, payment method, and schedule for such reports and payments will be incorporated into the applicable Participating Addendum. Unless agreed to in writing by the state, Contractor may not adjust the Master Agreement pricing to include the state fee for purchases made by Purchasing Entities within the jurisdiction of the state. No such agreement will affect the NASPO ValuePoint Administrative Fee percentage or the prices paid by Purchasing Entities outside the jurisdiction of the state requesting the additional fee.

5.3 NASPO ValuePoint Summary and Detailed Usage Reports

5.3.1 Sales Data Reporting. In accordance with this section, Contractor shall report to NASPO ValuePoint all Orders under this Master Agreement for which Contractor has invoiced the ordering entity or individual, including Orders invoiced to Participating Entity or Purchasing Entity employees for personal use if such use is permitted by this Master Agreement and the applicable Participating Addendum ("Sales Data"). Timely and complete reporting of Sales Data is a material requirement of this Master Agreement. Reporting requirements, including those related to the format, contents, frequency, or delivery of reports, may be updated by NASPO ValuePoint with reasonable notice to Contractor and without amendment to this Master Agreement. NASPO ValuePoint shall have exclusive ownership of any media on which reports are submitted and shall have a perpetual, irrevocable, non-exclusive, royalty free, and transferable right to display, modify, copy, and otherwise use reports, data, and information provided under this section.

5.3.2 Summary Sales Data. "Summary Sales Data" is Sales Data reported as cumulative totals by state. Contractor shall, using the reporting tool or template provided by NASPO ValuePoint, report Summary Sales Data to NASPO ValuePoint for each calendar quarter no later than thirty (30) days following the end of the quarter. If Contractor has no reportable Sales Data for the quarter, Contractor shall submit a zero-sales report.

5.3.3 Detailed Sales Data. "Detailed Sales Data" is Sales Data that includes for each Order all information required by the Solicitation or by NASPO ValuePoint,

including customer information, Order information, and line-item details. Contractor shall, using the reporting tool or template provided by NASPO ValuePoint, report Detailed Sales Data to NASPO ValuePoint for each calendar quarter no later than thirty (30) days following the end of the quarter. Detailed Sales Data shall be reported in the format provided in the Solicitation or provided by NASPO ValuePoint. The total sales volume of reported Detailed Sales Data shall be consistent with the total sales volume of reported Summary Sales Data.

5.3.4 Sales Data Crosswalks. Upon request by NASPO ValuePoint, Contractor shall provide to NASPO ValuePoint tables of customer and Product information and specific attributes thereof for the purpose of standardizing and analyzing reported Sales Data ("Crosswalks"). Customer Crosswalks must include a list of existing Purchasing Entities and identify for each the appropriate customer type as defined by NASPO ValuePoint. Product Crosswalks must include Contractor's part number or SKU for each Product in Contractor's catalog and identify for each the appropriate Master Agreement category (and subcategory, if applicable), manufacturer part number, product description, eight-digit UNSPSC Class Level commodity code, and (if applicable) EPEAT value and Energy Star rating. Crosswalk requirements and fields may be updated by NASPO ValuePoint with reasonable notice to Contractor and without amendment to this Master Agreement. Contractor shall work in good faith with NASPO ValuePoint to keep Crosswalks updated as Contractor's customer lists and product catalog change.

5.3.5 Executive Summary. Contractor shall, upon request by NASPO ValuePoint, provide NASPO ValuePoint with an executive summary that includes but is not limited to a list of states with an active Participating Addendum, states with which Contractor is in negotiations, and any Participating Addendum roll-out or implementation activities and issues. NASPO ValuePoint and Contractor will determine the format and content of the executive summary.

5.4 NASPO ValuePoint Cooperative Program Marketing, Training, and Performance Review

5.4.1 Staff Education. Contractor shall work cooperatively with NASPO ValuePoint personnel. Contractor shall present plans to NASPO ValuePoint for the education of Contractor's contract administrator(s) and sales/marketing workforce regarding the Master Agreement contract, including the competitive nature of NASPO ValuePoint procurements, the master agreement and participating addendum process, and the manner in which eligible entities can participate in the Master Agreement.

5.4.2 Onboarding Plan. Upon request by NASPO ValuePoint, Contractor shall, as Participating Addendums are executed, provide plans to launch the program for the Participating Entity. Plans will include time frames to launch the agreement and confirmation that the Contractor's website has been updated to properly reflect the scope and terms of the Master Agreement as available to the Participating Entity and eligible Purchasing Entities.

5.4.3 Annual Contract Performance Review. Contractor shall participate in an annual contract performance review with the Lead State and NASPO ValuePoint, which may at the discretion of the Lead State be held in person and which may include a discussion of marketing action plans, target strategies, marketing materials, Contractor reporting, and timeliness of payment of administration fees.

5.4.4 Use of NASPO ValuePoint Logo. The NASPO ValuePoint logos may not be used by Contractor in sales and marketing until a separate logo use agreement is executed with NASPO ValuePoint.

5.4.5 Most Favored Customer. Contractor shall, within thirty (30) days of their effective date, notify the Lead State and NASPO ValuePoint of any contractual most-favored-customer provisions in third-party contracts or agreements that may affect the promotion of this Master Agreement or whose terms provide for adjustments to future rates or pricing based on rates, pricing in, or Orders from this Master Agreement. Upon request of the Lead State or NASPO ValuePoint, Contractor shall provide a copy of any such provisions.

5.5 Cancellation. In consultation with NASPO ValuePoint, the Lead State may, in its discretion, cancel the Master Agreement or not exercise an option to renew, when utilization of Contractor's Master Agreement does not warrant further administration of the Master Agreement. The Lead State may also exercise its right to not renew the Master Agreement if the Contractor fails to record or report revenue for three consecutive quarters, upon 60-calendar day written notice to the Contractor. Cancellation based on nonuse or under-utilization will not occur sooner than [two years] after execution of the Master Agreement. This subsection does not limit the discretionary right of either the Lead State or Contractor to cancel the Master Agreement or terminate for default subject to the terms herein. This subsection also does not limit any right of the Lead State to cancel the Master Agreement under applicable laws.

5.6 Canadian Participation. Subject to the approval of Contractor, any Canadian provincial government or provincially funded entity in Alberta, British Columbia, Manitoba, New Brunswick, Newfoundland and Labrador, Nova Scotia, Ontario, Prince Edward Island, Quebec, or Saskatchewan, and territorial government or territorial government funded entity in the Northwest Territories, Nunavut, or Yukon, including municipalities, universities, community colleges, school boards, health authorities, housing authorities, agencies, boards, commissions, and crown corporations, may be eligible to use Contractor's Master Agreement.

5.7 Additional Agreement with NASPO. Upon request by NASPO ValuePoint, awarded Contractor shall enter into a direct contractual relationship with NASPO ValuePoint related to Contractor's obligations to NASPO ValuePoint under the terms of the Master Agreement, the terms of which shall be the same or similar (and not less favorable) than the terms set forth in the Master Agreement.

VI. Pricing, Payment & Leasing

6.1 Pricing. The prices contained in this Master Agreement or offered under this Master Agreement represent the not-to-exceed ("celling") price to any Purchasing Entity.

6.1.1 MSRP/List Price discount percentages must be guaranteed throughout the term of the Master Agreement, including any renewal terms, however; Contractor may increase its discount percentage at any time. The Lead State must be notified of any such discount percentage increase, and provided with a copy of the new Price List(s).

6.1.2 With the exception of Group C and Sub-Group C1 and C2 Devices, pricing must include all shipping, delivery, and installation costs associated with the Products. Excess installation charges however, may be billable. Refer to **section IV.E.5** of Exhibit A, Statement of Work, for more information.

DocuSign Envelope ID: C764E410-020D-4DE5-99C8-4C5B8EF55B29

6.1.3 Price Lists received after the 1st day of the new quarter may not be approved for up to thirty (30) days following submission. In addition, errors in Contractor Price Lists may delay the approval process further.

6.1.4 Contractor may update their lease rates once per quarter by providing the Lead State with documentation regarding said rate changes. Updates to lease rates will not be permitted until 8/1/2025.

6.1.5 Pricing shall remain firm during the first twelve (12) months of the Master Agreement (e.g. 8/1/2024 – 7/31/2025). Contractor may then update their pricing **once per calendar year**. All requested price increases must be sent to the Lead State and include documentation from Contractor which provides a detailed explanation for the increase. While there will not be any restrictions regarding direct and indirect cost increases, it will be at the Lead State's sole discretion to determine if the requested increase has a direct correlation to the Deliverables being offered under the Master Agreement. Price increases shall be allowed for all Products and all Services, including rate and fee structures on maintenance plans.

6.1.6 All approved Price Lists will be submitted by the Lead State to NASPO ValuePoint. Contractor shall then update all applicable websites with the new Price Lists after the NASPO ValuePoint website has been updated. Contractor is not permitted to send Price List updates directly to NASPO ValuePoint.

6.1.7 All inclusive Cost Per Copy (CPC) programs may be offered upon request by the Participating State or Entity, but pricing must not exceed Master Agreement pricing. Contractor must provide the Participating State or Entity with their pricing breakdown which enables the Participating State or Entity to easily compare the pricing in the CPC structure against the pricing in the Master Agreement.

6.1.8 Contractor may offer state-wide promotional discounts, customer location specific discounts, bulk discounts, or spot discounts. Contractor must notify the Participating State or Entity of special state-wide promotional discounts.

6.1.9 No retroactive adjustments to prices or rates will be allowed.

6.2 **Payment.** Unless otherwise agreed upon in a Participating Addendum or Order, Payment after Acceptance will be made within thirty (30) days following the date the entire order is delivered or the date a correct invoice is received, whichever is later. After 45 days the Contractor may assess overdue account charges up to a maximum rate of one percent per month on the outstanding balance, unless a different late payment amount is specified in a Participating Addendum or Order, or otherwise prescribed by applicable law. Payments will be remitted in the manner specified in the Participating Addendum or Order. Payments may be made via a purchasing card with no additional charge.

6.3 **Leasing or Alternative Financing Methods**. The procurement and other applicable laws of some Purchasing Entities may permit the use of leasing or alternative financing methods for the acquisition of Products under this Master Agreement. **Exhibit A, Statement of Work**, contains leasing provisions; however, it shall be at the discretion of each Participating State or Entity to accept these terms, reject these terms, or further negotiate the terms with the Contractor, as long as those negotiations don't fall outside the original scope of the RFP or the Master Agreement.

For example: *The maximum lease term on Group A Devices is 60 months; Contractor is not permitted to offer a lease term in excess of this.*

VII. Ordering

7.1 Order Numbers. Purchase Order numbers must be clearly shown on all acknowledgments, packing slips, invoices, and on all correspondence.

7.2 Quotes. Purchasing Entities may define entity-specific or project-specific requirements and informally compete the requirement among companies having a Master Agreement on an "as needed" basis. This procedure may also be used when requirements are aggregated or other firm commitments may be made to achieve reductions in pricing. This procedure may be modified in Participating Addenda and adapted to the Purchasing Entity's rules and policies. The Purchasing Entity may in its sole discretion determine which Master Agreement Contractors should be solicited for a quote. The Purchasing Entity may select the quote that it considers most advantageous, cost, and other factors considered.

7.3 Applicable Rules. Each Purchasing Entity will identify and utilize its own appropriate purchasing procedure and documentation. Contractor is expected to become familiar with the Purchasing Entities' rules, policies, and procedures regarding the ordering of supplies and/or services contemplated by this Master Agreement.

7.4 Required Documentation. Contractor shall not begin work without a valid Purchase Order or other appropriate commitment document under the law of the Purchasing Entity.

7.5 Term of Purchase. Orders may be placed consistent with the terms of this Master Agreement and applicable Participating Addendum during the term of the Master Agreement and Participating Addendum.

7.5.1 Orders must be placed pursuant to this Master Agreement prior to the termination date thereof, but may have a delivery date or performance period up to 120 days past the then-current termination date of this Master Agreement.

7.5.2 Notwithstanding the previous, Orders must also comply with the terms of the applicable Participating Addendum, which may further restrict the period during which Orders may be placed or delivered.

7.5.3 Financial obligations of Purchasing Entities payable after the current applicable fiscal year are contingent upon agency funds for that purpose being appropriated, budgeted, and otherwise made available.

7.5.4 Notwithstanding the expiration, cancellation or termination of this Master Agreement, Contractor shall perform in accordance with the terms of any Orders then outstanding at the time of such expiration or termination. Contractor shall not honor any Orders placed after the expiration, cancellation, or termination of this Master Agreement, or in any manner inconsistent with this Master Agreement's terms.

7.5.5 Orders for any separate indefinite quantity, task order, or other form of indefinite delivery order arrangement priced against this Master Agreement may not be placed after the expiration or termination of this Master Agreement, notwithstanding the term of any such indefinite delivery order agreement.

7.6 Ordering and Invoicing Specifications. At the discretion of the Participating State or Entity, all Orders pursuant to this Master Agreement, may contain the following:

7.6.1 Name of Purchasing Entity;

7.6.2 The name, phone number, and address of Purchasing Entity representative;

7.6.3 Order date;

7.6.4 Description of the Product and/or Service ordered;

7.6.5 Model number;

7.6.6 Price;

7.6.7 The Master Agreement number; and

7.6.8 Any additional information required by the Participating State or Entity.

7.7 Contractor shall have the ability to accept procurement credit cards, and will not assess any additional charges or fees for processing payments via this method.

7.8 At the discretion of the Participating State or Entity, Contractor shall have the ability to provide a centralized billing option.

7.9 Authorized Dealers shall have the ability to accept Orders from a Purchasing Entity and to invoice a Purchasing Entity directly, unless otherwise specified by a Participating State or Entity.

7.10 With the exception of drop-shipped items, Contractor and/or Authorized Dealers shall not issue an invoice until the Purchasing Entity has confirmed Acceptance, per **section IX**.

7.11 Contractor and/or Authorized Dealers may charge the Purchasing Entity a re-stocking fee for any Products that are not accepted. The amount of the fee shall be the lesser of 10% of the purchase price, or $200.00, unless otherwise specified in a Participating Addendum.

7.12 Contractor and/or Authorized Dealers may estimate meter reads if a Purchasing Entity fails to submit the required information within the specified time-frame.

7.13 All software Orders shall reference the Manufacturer's most recent release or version of the Product, unless the Purchasing Entity specifically requests a different version.

7.14 Contractor, Third-Party leasing companies, and/or Authorized Dealers may bill property tax separately or as otherwise indicated in a Participating Addendum or an Order.

7.15 Contractor and/or Authorized Dealers shall have a process in place for resolving disputed invoices, including escalation procedures. In addition, Contractor and/or Authorized Dealers shall have a process in place for issuing refunds or credits due to invoicing errors, as well as over-payments and Product returns.

7.16 Internet-based Portal and Electronic Catalogs. If Contractor provides the ability to place an Order through an internet-based portal or electronic catalog, then Contractor shall maintain all necessary hardware, software, backup-capacity and network connections required to operate that internet-based portal or electronic catalog. In addition, Contractor shall adhere to the following requirements:

7.16.1 The internet-based portal or electronic catalog shall clearly designate that the Products are part of the NASPO ValuePoint Master Agreement, and shall link to the Participating State or Entity's designated web location;

7.16.2 All Environmentally Preferable Products (EPP) shall be clearly listed;

7.16.3 If Contractor's electronic catalog will either be hosted on or accessed through the Participating State's eCommerce system, then Contractor shall comply with all policies, procedures and directions from the Participating State or Entity in relation to hosting its catalog on or making its catalog accessible through that system;

7.16.4 All information made available through the Participating State or Entity's eCommerce system is accurate and complies with the Master Agreement and the

Participating Addendum; and

7.16.5 Paper catalogs or other digital media catalogs must be supplied to the Participating State or Entity upon request.

7.17 Communication. All communications concerning administration of Orders placed must be furnished solely to the authorized purchasing agent within the Purchasing Entity's purchasing office, or to such other individual identified in writing in the Order.

7.18 Substitutions. If an ordered Product is out-of-stock, Contractor shall notify the Purchasing Entity and request approval before substituting for the out-of-stock item. Contractor's request to substitute shall explain how the substituted Product compares with the out-of-stock item. Any substitute Product offered must be on the Contractor's Master Agreement Price List.

7.19 Contract Provisions for Orders Utilizing Federal Funds. Pursuant to Appendix II to 2 Code of Federal Regulations (CFR) Part 200, Contract Provisions for Non-Federal Entity Contracts Under Federal Awards, Orders funded with federal funds may have additional contractual requirements or certifications that must be satisfied at the time the Order is placed or upon delivery. These federal requirements may be proposed by Participating Entities in Participating Addenda and Purchasing Entities for incorporation in Orders placed under this Master Agreement.

7.20 Supplemental Documents. All Attachments to this Master Agreement have been reviewed and negotiated by the Lead State only to the extent that they comply with the terms and conditions of RFP-NP-23-001 as well as this Master Agreement. Participating States and Entities are still advised however, to review each Supplemental Document and negotiate the terms and conditions further with Contractor if necessary. It shall be at the discretion of Contractor and Purchasing Entity to determine which Supplemental Documents are appropriate for each Order type. With the exception of End User License Agreements (EULA's), clickwrap agreements, and any third party software agreements, which have not been reviewed or negotiated by the Lead State, nor are they attached to this Master Agreement, only the Supplemental Documents attached to this Master Agreement are permitted to be used for any Order placed.

VIII. Shipping and Delivery

8.1 Shipping Terms. All Products must be shipped F.O.B. destination, standard freight pre-paid by the Contractor, to the Purchasing Entity's specified location, unless otherwise indicated in a Participating Addendum.

8.1.1 Notwithstanding the above, responsibility and liability for loss or damage will remain the Contractor's until final inspection and Acceptance when responsibility will pass to the Purchasing Entity except as to latent defects, fraud, and Contractor's warranty obligations.

8.2 Available Products. Devices that are in-stock or otherwise not subject to supply-chain shortages or issues, shall be delivered within thirty (30) calendar days after receipt of Order, unless otherwise specified by the Purchasing Entity.

8.3 Required Updates. Contractor shall provide a minimum of semi-monthly updates to the Purchasing Entity regarding the status of all Devices that are, or will be expected to go, on backorder.

8.4 Software Installation. Software related to the Device must be installed within five (5)

Business Days of the Device installation, or as otherwise stated in an Order.

8.5 **Delivery Days and Receiving Hours.** All deliveries shall be made during Normal Business Hours, which may vary for each Purchasing Entity of each Participating State. The Purchasing Entity shall not be responsible for any additional charges should the Contractor fail to observe specific delivery days and receiving hours. The delivery days and delivery hours shall be established by each individual Purchasing Entity upon Order placement.

8.6 **Inside Deliveries.** All deliveries, with the exception of drop-shipped or desktop Devices, shall be made to the interior location specified by the Purchasing Entity. Specific delivery instructions will be noted on the Order. Any damage to the building interior, scratched walls, damage to the freight elevator, etc., will be the responsibility of the Contractor. If damage does occur, it is the responsibility of the Contractor to immediately notify the Purchasing Entity placing the Order.

8.7 **Packaging.** Products shall be packaged and labeled so as to satisfy all legal and commercial requirements applicable for use by any Purchasing Entity, and shall include, without limitation and if applicable, OSHA material safety data sheets, and shall conform to all statements made on the label. Packages that cannot be clearly identified may be refused and/or returned at no cost to the Purchasing Entity.

IX. Inspection and Acceptance

9.1 **Laws and Regulations.** Any and all Products offered and furnished must comply fully with all applicable Federal, State, and local laws and regulations.

9.2 **Applicability.** Unless otherwise specified in the Participating Addendum, or ordering document, the terms of this **section IX** will apply. This section is not intended to limit rights and remedies under the applicable commercial code.

9.3 With the exception of drop-shipped Devices, Purchasing Entity shall confirm delivery, installation and Acceptance of all Devices covered by each purchase or lease Order, by signing a Delivery and Acceptance Certificate (D&A), as referenced in **Exhibit B, Sample D&A Certificate**, which shows Acceptance of the Device(s) and allows Contractor to invoice for the Device(s).

9.4 Purchasing Entity agrees to sign and return the D&A to Contractor (which, at mutual agreement, may be done electronically) within five (5) Business Days after any Device is installed, or as otherwise stated in a Participating Addendum.

9.5 Failure to sign the D&A or reject the Device(s) within the foregoing five (5) day period shall be deemed as Acceptance by the Purchasing Entity; however, it does not relieve the Contractor of liability for material (nonconformity that substantially impairs value) defects subsequently revealed when Devices are put to use. Acceptance of such Devices may be revoked in accordance with the provisions of the applicable commercial code, and the Contractor shall be liable for any resulting expense incurred by the Purchasing Entity in relation to the preparation and shipping of Devices(s) rejected and returned, or for which Acceptance is revoked.

9.6 **Inspection.** All Devices are subject to inspection at reasonable times and places before Acceptance. Contractor shall provide right of access to the Lead State, or to any other authorized agent or official of the Lead State or other Participating or Purchasing Entity, at reasonable times, to monitor and evaluate performance, compliance, and/or quality assurance requirements under this Master Agreement.

DocuSign Envelope ID: C764E410-020D-4DE5-99C8-4C5B8EF55B29

9.6.1 Devices that do not meet specifications may be rejected. Failure to reject upon receipt, however, does not relieve the contractor of liability for material (nonconformity that substantial impairs value) latent or hidden defects subsequently revealed when goods are put to use.

9.6.2 Acceptance of such goods may be revoked in accordance with the provisions of the applicable commercial code, and the Contractor is liable for any resulting expense incurred by the Purchasing Entity related to the preparation and shipping of Device rejected and returned, or for which Acceptance is revoked.

9.7 Failure to Conform. If any Services do not conform to contract requirements, the Purchasing Entity may require the Contractor to perform the Services again in conformity with contract requirements, at no increase in Order amount. When defects cannot be corrected by re-performance, the Purchasing Entity may require the Contractor to take necessary action to ensure that future performance conforms to contract requirements and reduce the contract price to reflect the reduced value of Services performed.

9.8 Acceptance Testing. Purchasing Entity may establish a process, in keeping with industry standards, to ascertain whether the Device meets the standard of performance or specifications prior to Acceptance by the Purchasing Entity.

9.8.1 The Acceptance Testing period will be five (5) Business Days, unless otherwise specified, starting from the day after the Device is delivered or, if installed by Contractor, the day after the Device is installed and Contractor certifies that the Device is ready for Acceptance Testing.

9.8.2 If the Device does not meet the standard of performance or specifications during the initial period of Acceptance Testing, Purchasing Entity may, at its discretion, continue Acceptance Testing for a maximum of ten (10) Business Days, until the standard of performance is met.

9.8.3 Upon rejection, the Contractor will have thirty (30) calendar days to cure. If after the cure period, the Device still has not met the standard of performance or specifications, the Purchasing Entity may, at its option: (a) declare Contractor to be in breach and terminate the Order; (b) demand replacement Device from Contractor at no additional cost to Purchasing Entity; or, (c) continue the cure period for an additional time period agreed upon by the Purchasing Entity and the Contractor.

9.8.4 Contractor shall pay all costs related to the preparation and shipping of Device returned pursuant to the section.

9.8.5 No Device will be deemed Accepted and no charges will be paid until the standard of performance or specification is met.

X. Warranty

10.1 Applicability. Unless otherwise specified in the Master Agreement, Participating Addendum, or ordering document, the terms of this **section X** will apply.

10.2 The warranty period shall begin upon Acceptance of the Device, and shall be for a minimum of ninety (90) days for purchase or leased Devices. This warranty shall be extended to all Devices acquired under the Master Agreement, including Remanufactured and/or Refurbished Devices.

10.3 Devices that are sold under the resulting Master Agreement will come with the standard features as published on the Manufacturers website, and will not deviate from the stated

specifications.

10.4 Devices shall be in good working order, free from any defects in material and workmanship, and fit for the ordinary purposes they are intended to serve.

10.5 If defects are identified, per mutual agreement of Contractor and the Purchasing Entity, Contractor obligations shall be limited solely to the repair or replacement of Devices proven to be defective upon inspection.

10.6 Replacement of Devices shall be on a like-for-like basis and shall be at no cost to the Purchasing Entity.

10.7 Repair of defective parts and/or Devices shall be at no cost to the Purchasing Entity.

10.8 Upon significant failure of a Device, the warranty period shall commence again for a minimum of ninety (90) days. Significant failure shall be determined by the Participating State.

10.9 Contractor warranty obligations shall not apply if:

10.9.1 The Device is installed, wired, modified, altered, or serviced by anyone other than Contractor and/or their Authorized Dealer;

10.9.2 If a defective or non-authorized Accessory, Supply, software, or part is attached to, or used in the Device; and

10.9.3 The Device is relocated to any place where Contractor Services are not available.

10.10 Contractor agrees to perform its Services in a professional manner, consistent with applicable industry standards.

10.11 It will be at the discretion of each Participating State or Entity to negotiate additional warranty requirements with the Contractor.

10.12 Lemon Clause

10.12.1 This clause shall apply to all Devices that are purchased or leased under the Contractor's Master Agreement. Contractor will utilize its Total Quality Commitment to meet its requirements.

10.12.2 This clause shall not apply if Supplies are used in the Devices that were not manufactured, provided, or authorized by the Contractor.

10.12.3 The application period is thirty-six (36) months from the date of Acceptance.

10.12.4 This clause shall take precedence over any other warranty or Services clauses associated with the Contractor's Master Agreement, or as specified by a Participating State or Entity in their Participating Addendum.

10.12.5 A Purchasing Entity must maintain an uninterrupted Maintenance Agreement with Contractor or their Authorized Dealer, on all purchased Devices in order for this clause to apply past the initial ninety (90) day warranty.

10.12.6 Any Device that fails (except due to operator error) to function in accordance with the Manufacturer's published performance specifications, four (4) times in any four (4) week period due to the same functional issue and/or is subject to recurring related problems, shall be replaced with a new Device that meets or exceeds the requirements of the original Device, at no cost to the Purchasing Entity.

10.13 Rights Reserved. The rights and remedies of the parties under this warranty are in addition to any other rights and remedies of the parties provided by law or equity, including, without limitation, actual damages, and, as applicable and awarded under the law, to a prevailing party, reasonable attorneys' fees and costs.

XI. Equipment Title

11.1 Conveyance of Title. Contractor shall have exclusive title to the Devices being delivered and the Devices shall be free and clear of all liens, encumbrances, and security interests. Title to the Device shall only pass to the Purchasing Entity upon:

11.1.1 Purchasing Entity up-front purchase of the Device;

11.1.2 Purchasing Entity exercising the purchase option at the end of an FMV Lease;

11.1.3 Expiration of a Purchasing Entity's Capital Lease; or

11.1.4 Purchasing Entity has secured Third Party financing and payment is being made directly to the Contractor by the Purchasing Entity.

11.2 Embedded Software. Transfer of title to the Device must include an irrevocable and perpetual license to use any Embedded Software in the Device. If Purchasing Entity subsequently transfers title of the Device to another entity, Purchasing Entity shall have the right to transfer the license to use the Embedded Software with the transfer of Device title. A subsequent transfer of this software license will be at no additional cost or charge to either Purchasing Entity or Purchasing Entity's transferee.

11.3 License of Pre-Existing Intellectual Property. Contractor grants to the Purchasing Entity a nonexclusive, perpetual, royalty-free, irrevocable, license to use, publish, translate, reproduce, transfer with any sale of tangible media or Product, perform, display, and dispose of the Intellectual Property, and its derivatives, used or delivered under this Master Agreement solely for Purchasing Entity, but not created under it ("Pre-existing Intellectual Property"). The Contractor shall be responsible for ensuring that this license is consistent with any third-party rights in the Pre-existing Intellectual Property.

XII. Indemnification

12.1 General Indemnification. The Contractor shall defend, indemnify and hold harmless NASPO, NASPO ValuePoint, the Lead State, Participating Entities, and Purchasing Entities, along with their officers and employees, from and against third-party claims, damages or causes of action including reasonable attorneys' fees and related costs for any death, injury, or damage to tangible property arising from any negligent act, error, or willful omission of the Contractor, its employees or subcontractors or volunteers, at any tier, relating to performance under this Master Agreement, except to the extent such death, injury, or damage to property is arising out of or caused by the negligence or willful misconduct of NASPO, NASPO ValuePoint, the Lead State, Participating Entities, and Purchasing Entities, or their officers, agents, and employees.

12.2 Intellectual Property Indemnification. The Contractor shall defend, indemnify and hold harmless NASPO, NASPO ValuePoint, the Lead State, Participating Entities, Purchasing Entities, along with their officers and employees ("Indemnified Party"), from and against claims, damages or causes of action including reasonable attorneys' fees and related costs arising out of the claim that the Product or its use infringes Intellectual Property rights of another person or entity ("Intellectual Property Claim"), except to the extent such

Intellectual Property Claim is arising out of or caused by the actions, modifications or alterations to the Product made by NASPO, NASPO ValuePoint, the Lead State, Participating Entities, and Purchasing Entities, or their officers, agents, and employees, without the express written consent of the Contractor.

12.2.1 The Contractor's obligations under this section will not extend to any combination of the Product with any other product, system or method, unless the Product, system or method is:

12.2.1.1 provided by the Contractor or the Contractor's subsidiaries or affiliates;

12.2.1.2 specified by the Contractor to work with the Product;

12.2.1.3 reasonably required to use the Product in its intended manner, and the infringement could not have been avoided by substituting another reasonably available product, system or method capable of performing the same function; or

12.2.1.4 reasonably expected to be used in combination with the Product, system or method.

12.2.2 The Indemnified Party shall promptly notify the Contractor after receiving notice of an Intellectual Property Claim. Even if the Indemnified Party fails to provide reasonable notice, the Contractor shall not be relieved from its obligations unless the Contractor can demonstrate that it was prejudiced in defending the Intellectual Property Claim resulting in increased expenses or loss to the Contractor. If the Contractor promptly and reasonably investigates and defends any Intellectual Property Claim, it shall have control over the defense and settlement of the Intellectual Property Claim. However, the Indemnified Party must consent in writing for any money damages or obligations for which it may be responsible.

12.2.3 The Indemnified Party shall furnish, at the Contractor's reasonable request and expense, information and assistance necessary for such defense. If the Contractor fails to vigorously pursue the defense or settlement of the Intellectual Property Claim, the Indemnified Party may assume the defense or settlement of the Intellectual Property Claim and the Contractor shall be liable for all costs and expenses, including reasonable attorneys' fees and related costs, incurred by the Indemnified Party in the pursuit of the Intellectual Property Claim.

12.2.4 Unless otherwise set forth herein, **section 12.2** is not subject to any limitations of liability in this Master Agreement or in any other document executed in conjunction with this Master Agreement.

XIII. Insurance

13.1 Unless otherwise agreed in a Participating Addendum, Contractor shall, during the term of this Master Agreement, maintain in full force and effect, the insurance described in this section. Contractor shall acquire such insurance from an insurance carrier or carriers licensed to conduct business in each Participating Entity's state and having a rating of A-, Class VII or better, in the most recently published edition of Best's Reports. Failure to buy and maintain the required insurance may result in this Master Agreement's termination or, at a Participating Entity's option; result in termination of its Participating Addendum.

13.2 Coverage shall be written on an occurrence basis. The minimum acceptable limits shall be

as indicated below, with no deductible for each of the following categories:

13.2.1 **Commercial General Liability** covering premises operations, Independent Contractors, Products and completed operations, blanket contractual liability, personal injury (including death), advertising liability, and property damage, with a limit of not less than $1 million per occurrence, $2 million general aggregate, $2 million Products and completed operations aggregate and $50,000 and any one fire. If any aggregate limit is reduced below $2,000,000 because of claims made or paid, the Contractor shall immediately obtain additional insurance to restore the full aggregate limit and furnish to the Participating Entity, a certificate or other document satisfactory to the Participating Entity, showing compliance with this provision.

13.2.2 **Cyber Liability** covering claims and losses with respect to network, internet (Cloud) or other data disclosure risks (such as data breaches, releases of Confidential Information, unauthorized access/use of information, and identity theft) with minimum limits of not less than $1,000,000 per occurrence and $2,000,000 aggregate.

13.2.3 Contractor must comply with any applicable State Workers Compensation or Employers Liability Insurance requirements.

13.2.4 **Automobile Liability** covering any auto (including owned, hired and non-owned), with a minimum limit of $1,000,000 each accident combined single limit.

13.3 Contractor shall pay premiums on all insurance policies. Such policies shall also reference this Master Agreement and shall have a condition that the insurer not revoke them until thirty (30) calendar days after notice of intended revocation thereof shall have been given to Purchasing Entity and Participating Entity by the Contractor.

13.4 Prior to commencement of performance, Contractor shall provide to the Lead State a written endorsement to the Contractor's general liability insurance policy or other documentary evidence acceptable to the Lead State that:

13.4.1 Includes the Participating States identified in the Request for Proposal as additional insured's, and;

13.4.2 Provides that the Contractor's liability insurance policy shall be primary, with any liability insurance of any Participating State as secondary and noncontributory. Unless otherwise agreed in any Participating Addendum, the Participating Entity's rights and Contractor's obligations are the same as those specified in the first sentence of this subsection. Before performance of any Purchase Order issued after execution of a Participating Addendum authorizing it, the Contractor shall provide to a Purchasing Entity or Participating Entity who requests it the same information described in this subsection.

13.5 Contractor shall furnish to the Lead State, Participating Entity, and, on request, the Purchasing Entity copies of certificates of all required insurance within seven (7) calendar days of the execution of this Master Agreement, the execution of a Participating Addendum, or the Order's effective date and prior to performing any work. The insurance certificate shall provide the following information: the name and address of the insured; name, address, telephone number and signature of the authorized agent; name of the insurance company (authorized to operate in all states); a description of coverage in detailed standard terminology (including policy period, policy number, limits of liability, exclusions and endorsements); and an acknowledgment of the requirement for notice of cancellation.

Copies of renewal certificates of all required insurance shall be furnished within fifteen (15) days after any renewal date. These certificates of insurance must expressly indicate compliance with each insurance requirement specified in this section. Failure to provide evidence of coverage may, at sole option of the Lead State, or any Participating Entity, result in this Master Agreement's termination or the termination of any Participating Addendum.

13.6 Coverage and limits shall not limit Contractor's liability and obligations under this Master Agreement, any Participating Addendum, or any Order.

13.7 Notice of Cancellation. Contractor shall pay premiums on all insurance policies. Contractor shall provide notice to a Participating Entity who is a state within five (5) business days after Contractor is first aware of expiration, cancellation or nonrenewal of such policy or is first aware that cancellation is threatened or expiration, nonrenewal or expiration otherwise may occur.

13.8 Participating Entities. Contractor shall provide to Participating States and Participating Entities the same insurance obligations and documentation as those specified in **section XIII**, except the endorsement is provided to the applicable Participating State or Participating Entity.

13.9 Furnishing of Certificates. Contractor shall furnish to the Lead State copies of certificates of all required insurance in a form sufficient to show required coverage within thirty (30) calendar days of the execution of this Master Agreement and prior to performing any work. Copies of renewal certificates of all required insurance will be furnished within thirty (30) days after any renewal date to the applicable state Participating Entity. Failure to provide evidence of coverage may, at the sole option of the Lead State, or any Participating Entity, result in this Master Agreement's termination or the termination of any Participating Addendum.

13.10 Disclaimer. Insurance coverage and limits will not limit Contractor's liability and obligations under this Master Agreement, any Participating Addendum, or any Purchase Order.

XIV. General Provisions

14.1 Records Administration and Audit

14.1.1 The Contractor shall maintain books, records, documents, and other evidence pertaining to this Master Agreement and Orders placed by Purchasing Entities under it to the extent and in such detail as will adequately reflect performance and administration of payments and fees. Contractor shall permit the Lead State, a Participating Entity, a Purchasing Entity, the federal government (including its grant awarding entities and the U.S. Comptroller General), and any other duly authorized agent of a governmental agency, to audit, inspect, examine, copy and/or transcribe Contractor's books, documents, papers and records directly pertinent to this Master Agreement or orders placed by a Purchasing Entity under it for the purpose of making audits, examinations, excerpts, and transcriptions. This right will survive for a period of six (6) years following termination of this Agreement or final payment for any order placed by a Purchasing Entity against this Master Agreement, whichever is later, or such longer period as is required by the Purchasing Entity's state statutes, to assure compliance with the terms hereof or to evaluate performance hereunder.

14.1.2 Without limiting any other remedy available to any governmental entity, the Contractor shall reimburse the applicable Lead State, Participating Entity, or

Purchasing Entity for any overpayments inconsistent with the terms of the Master Agreement or Orders or underpayment of fees found as a result of the examination of the Contractor's records.

14.1.3 The rights and obligations herein exist in addition to any quality assurance obligation in the Master Agreement that requires the Contractor to self-audit contract obligations and that permits the Lead State to review compliance with those obligations.

14.2 Confidentiality, Non-Disclosure, and Injunctive Relief

14.2.1 Confidentiality. Contractor acknowledges that it and its employees or agents may, in the course of providing a Product under this Master Agreement, be exposed to or acquire information that is confidential to Purchasing Entity or Purchasing Entity's clients.

14.2.1.1 Any and all information of any form that is marked as confidential or would by its nature be deemed confidential obtained by Contractor or its employees or agents in the performance of this Master Agreement, including but not necessarily limited to (1) any Purchasing Entity's records, (2) personnel records, and (3) information concerning individuals, is confidential information of Purchasing Entity ("Confidential Information").

14.2.1.2 Any reports or other documents or items (including software) that result from the use of the Confidential Information by Contractor shall be treated in the same manner as the Confidential Information.

14.2.1.3 Confidential Information does not include information that (1) is or becomes (other than by disclosure by Contractor) publicly known; (2) is furnished by Purchasing Entity to others without restrictions similar to those imposed by this Master Agreement; (3) is rightfully in Contractor's possession without the obligation of nondisclosure prior to the time of its disclosure under this Master Agreement; (4) is obtained from a source other than Purchasing Entity without the obligation of confidentiality, (5) is disclosed with the written consent of Purchasing Entity; or (6) is independently developed by employees, agents or subcontractors of Contractor who can be shown to have had no access to the Confidential Information.

14.2.2 Non-Disclosure. Contractor shall hold Confidential Information in confidence, using at least the industry standard of confidentiality, and shall not copy, reproduce, sell, assign, license, market, transfer or otherwise dispose of, give, or disclose Confidential Information to third parties, other than its employees, agents or Authorized Dealers, or use Confidential Information for any purposes whatsoever other than what is necessary to the performance of Orders placed under this Master Agreement.

14.2.2.1 Contractor shall advise each of its employees and agents of their obligations to keep Confidential Information confidential. Contractor shall use commercially reasonable efforts to assist Purchasing Entity in identifying and preventing any unauthorized use or disclosure of any Confidential Information.

14.2.2.2 Without limiting the generality of the foregoing, Contractor shall advise

Purchasing Entity, applicable Participating Entity, and the Lead State immediately if Contractor learns or has reason to believe that any person who has had access to Confidential Information has violated or intends to violate the terms of this Master Agreement, and Contractor shall at its expense cooperate with Purchasing Entity in seeking injunctive or other equitable relief in the name of Purchasing Entity or Contractor against any such person.

14.2.2.3 Except as directed by Purchasing Entity, Contractor will not at any time during or after the term of this Master Agreement disclose, directly or indirectly, any Confidential Information to any person, except in accordance with this Master Agreement, and that upon termination of this Master Agreement or at Purchasing Entity's request, Contractor shall turn over to Purchasing Entity all documents, papers, and other matter in Contractor's possession that embody Confidential Information.

14.2.2.4 Notwithstanding the foregoing, Contractor may keep one copy of such Confidential Information necessary for quality assurance, audits, and evidence of the performance of this Master Agreement.

14.2.3 **Injunctive Relief.** Contractor acknowledges that Contractor's breach of **section 14.2** would cause irreparable injury to the Purchasing Entity that cannot be adequately compensated in monetary damages. Accordingly, Purchasing Entity may seek and obtain injunctive relief against the breach or threatened breach of the foregoing undertakings, in addition to any other legal remedies that may be available. Contractor acknowledges and agrees that the covenants contained herein are necessary for the protection of the legitimate business interests of Purchasing Entity and are reasonable in scope and content.

14.2.4 **Purchasing Entity Law.** These provisions will be applicable only to extent they are not in conflict with the applicable public disclosure laws of any Purchasing Entity.

14.2.5 **NASPO ValuePoint.** The rights granted to Purchasing Entities and Contractor's obligations under this section will also extend to NASPO ValuePoint's Confidential Information, including but not limited to Participating Addenda, Orders or transaction data relating to Orders under this Master Agreement that identify the entity/customer, Order dates, line-item descriptions and volumes, and prices/rates. This provision does not apply to disclosure to the Lead State, a Participating State, or any governmental entity exercising an audit, inspection, or examination pursuant to this Master Agreement. To the extent permitted by law, Contractor shall notify the Lead State of the identity of any entity seeking access to the Confidential Information described in this subsection.

14.2.6 **Public Information.** This Master Agreement and all related documents are subject to disclosure pursuant to the Lead State's public information laws.

14.3 Assignment/Subcontracts

14.3.1 Contractor shall not assign, sell, transfer, subcontract or sublet rights, or delegate responsibilities under this Master Agreement, in whole or in part, without the prior written approval of the Lead State, which shall not be unreasonably withheld.

14.3.2 The Lead State reserves the right to assign any rights or duties, including written

assignment of contract administration duties, to NASPO ValuePoint and other third parties, upon written notice to Contractor.

14.4 Changes in Contractor Representation. The Contractor must, within thirty (30) calendar days, notify the Lead State in writing of any changes in the Contractor's key administrative personnel managing the Master Agreement. The Lead State reserves the right to approve or reject changes in key personnel, as identified in the Contractor's proposal. The Contractor shall propose replacement key personnel having substantially equal or better education, training, and experience as was possessed by the key person proposed and evaluated in the Contractor's proposal.

14.5 Independent Contractor. Contractor is an independent contractor. Contractor has no authorization, express or implied, to bind the Lead State, Participating States, other Participating Entities, or Purchasing Entities to any agreements, settlements, liability or understanding whatsoever, and shall not to hold itself out as agent except as expressly set forth herein or as expressly set forth in an applicable Participating Addendum or Order.

14.6 Cancellation. Unless otherwise set forth herein, this Master Agreement may be canceled by either party upon sixty (60) days' written notice prior to the effective date of the cancellation. Further, any Participating Entity may cancel its participation upon thirty (30) days' written notice, unless otherwise limited or stated in the Participating Addendum. Cancellation may be in whole or in part. Any cancellation under this provision will not affect the rights and obligations attending Orders outstanding at the time of cancellation, including any right of a Purchasing Entity to indemnification by the Contractor, rights of payment for Products delivered and accepted, rights attending any warranty or default in performance in association with any Order, and requirements for records administration and audit. Cancellation of the Master Agreement due to Contractor default may be immediate.

14.7 Force Majeure. Neither party to this Master Agreement shall be held responsible for delay or default caused by fire, riot, unusually severe weather, other acts of God, acts of war which are beyond that party's reasonable control, pandemics, or epidemics that would negatively impact supply chain distribution. The Lead State may terminate this Master Agreement upon determining such delay or default will reasonably prevent successful performance of the Master Agreement. This clause does not absolve Purchasing Entity of their payment obligations for goods or services received. Past due account charges will not accrue until the conclusion of the Force Majeure event, at which point Contractor shall also be expected to resume their Service obligations.

14.8 Defaults and Remedies

14.8.1 The occurrence of any of the following events will be an event of default under this Master Agreement:

14.8.1.1 Nonperformance of contractual requirements;

14.8.1.2 A material breach of any term or condition of this Master Agreement;

14.8.1.3 Any certification, representation or warranty by Contractor in response to the solicitation or in this Master Agreement that proves to be untrue or materially misleading;

14.8.1.4 Institution of proceedings under any bankruptcy, insolvency, reorganization or similar law, by or against Contractor, or the appointment of a receiver or similar officer for Contractor or any of its property, which is not vacated or fully stayed within thirty (30) calendar

days after the institution or occurrence thereof; or

14.8.1.5 Any default specified in another section of this Master Agreement.

14.8.2 Upon the occurrence of an event of default, the Lead State shall issue a written notice of default, identifying the nature of the default, and providing a period of thirty (30) calendar days in which Contractor shall have an opportunity to cure the default. The Lead State shall not be required to provide advance written notice or a cure period and may immediately terminate this Master Agreement in whole or in part if the Lead State, in its sole discretion, determines that it is reasonably necessary to preserve public safety or prevent immediate public crisis. Time allowed for cure will not diminish or eliminate Contractor's liability for damages to the extent provided for under this Master Agreement.

14.8.3 If Contractor is afforded an opportunity to cure and fails to cure the default within the period specified in the written notice of default, Contractor shall be in breach of its obligations under this Master Agreement and the Lead State shall have the right to exercise any or all of the following remedies:

14.8.3.1 Any remedy provided by law;

14.8.3.2 Termination of this Master Agreement and any related Contracts or portions thereof;

14.8.3.3 Intentionally Deleted;

14.8.3.4 Suspension of Contractor from being able to respond to future bid solicitations; and

14.8.3.5 Suspension of Contractor's performance.

14.8.4 Unless otherwise specified in the Participating Addendum, in the event of a default under a Participating Addendum, a Participating Entity shall provide a written notice of default as described in this section and shall have all of the rights and remedies under this paragraph regarding its participation in the Master Agreement, in addition to those set forth in its Participating Addendum. Unless otherwise specified in an Order, a Purchasing Entity shall provide written notice of default as described in this section and have all of the rights and remedies under this paragraph and any applicable Participating Addendum with respect to an Order placed by the Purchasing Entity. Nothing in these Master Agreement Terms and Conditions will be construed to limit the rights and remedies available to a Purchasing Entity under the applicable commercial code.

14.9 Waiver of Breach. Failure of the Lead State, Participating Entity, or Purchasing Entity to declare a default or enforce any rights and remedies will not operate as a waiver under this Master Agreement, any Participating Addendum, or any Purchase Order. Any waiver by the Lead State, Participating Entity, or Purchasing Entity must be in writing. Waiver by the Lead State or Participating Entity of any default, right or remedy under this Master Agreement or Participating Addendum, or by Purchasing Entity with respect to any Purchase Order, or breach of any terms or requirements of this Master Agreement, a Participating Addendum, or Purchase Order will not be construed or operate as a waiver of any subsequent default or breach of such term or requirement, or of any other term or requirement under this Master Agreement, any Participating Addendum, or any Purchase Order.

14.10 Debarment. The Contractor certifies that neither it nor its principals are presently debarred,

suspended, proposed for debarment, declared ineligible, or voluntarily excluded from participation in public procurement or contracting by any governmental department or agency. This certification represents a recurring certification made at the time any Order is placed under this Master Agreement. If the Contractor cannot certify this statement, attach a written explanation for review by the Lead State.

14.11 No Waiver of Sovereign Immunity

14.11.1 In no event will this Master Agreement, any Participating Addendum or any contract or any Purchase Order issued thereunder, or any act of the Lead State, a Participating Entity, or a Purchasing Entity be a waiver of any form of defense or immunity, whether sovereign immunity, governmental immunity, immunity based on the Eleventh Amendment to the Constitution of the United States or otherwise, from any claim or from the jurisdiction of any court.

14.11.2 This section applies to a claim brought against the Participating Entities who are states only to the extent Congress has appropriately abrogated the state's sovereign immunity and is not consent by the state to be sued in federal court. This section is also not a waiver by the state of any form of immunity, including but not limited to sovereign immunity and immunity based on the Eleventh Amendment to the Constitution of the United States.

14.12 Governing Law and Venue

14.12.1 The laws of the Lead State shall govern the construction and effect of this Master Agreement. Venue for any administrative or judicial action relating to this Master Agreement shall be in the City and County of Denver, Colorado.

14.12.2 The construction and effect of any Participating Addendum or Order against this Master Agreement shall be governed by and construed in accordance with the laws of the Participating Entity's or Purchasing Entity's State.

14.12.3 If a claim is brought in a federal forum, then it must be brought and adjudicated solely and exclusively within the United States District Court for (in decreasing order of priority): The Lead State for claims relating to the procurement, evaluation, award, or Contract performance or administration if the Lead State is a party; the Participating State if a named party; the Participating Entity state if a named party; or the Purchasing Entity state if a named party.

14.13 Assignment of Antitrust Rights. Contractor irrevocably assigns to a Participating Entity who is a state any claim for relief or cause of action which the Contractor now has or which may accrue to the Contractor in the future by reason of any violation of state or federal antitrust laws (15 U.S.C. § 1-15 or a Participating Entity's state antitrust provisions), as now in effect and as may be amended from time to time, in connection with any goods or services provided in that state for the purpose of carrying out the Contractor's obligations under this Master Agreement or Participating Addendum, including, at the Participating Entity's option, the right to control any such litigation on such claim for relief or cause of action.

14.14 Survivability. Unless otherwise explicitly set forth in a Participating Addendum or Order, the terms of this Master Agreement as they apply to the Contractor, Participating Entities, and Purchasing Entities, including but not limited to pricing and the reporting of sales and payment of administrative fees to NASPO ValuePoint, shall survive expiration of this Master Agreement and shall continue to apply to all Participating Addenda and Orders until the expiration thereof.

SIGNATURE PAGE

THE PARTIES HERETO HAVE EXECUTED THIS MASTER AGREEMENT

*** Individual signing for Contractor hereby swears and affirms that they are authorized to act on Contractor's behalf and acknowledge that the Lead State is relying on their representations to that effect.**

CONTRACTOR **Toshiba America Business Solutions, Inc.**	STATE OF COLORADO **Jared S. Polis, Governor** Department of Personnel & Administration State Purchasing & Contracts Office Tony Gherardini, Executive Director
By: Larry White Title: President & CEO By: DocuSigned by: Larry White A6B11ECE7C8740D... *Signature Date: 12/20/2023	By: DocuSigned by: John Chapman EF45AFDEB51E414... John Chapman, State Purchasing Manager Date: 12/20/2023

ALL CONTRACTS REQUIRE APPROVAL BY THE STATE CONTROLLER

CRS §24-30-202 requires the State Controller to approve all State Contracts. This Master Agreement is not valid until signed and dated below by the State Controller or delegate. Contractor is not authorized to begin performance until such time. If Contractor begins performing prior thereto, the State of Colorado is not obligated to pay Contractor for such performance or for any Goods and/or Services provided hereunder.

STATE CONTROLLER
Robert Jaros, CPA, MBA, JD

By: DocuSigned by: Nathan Stanley 868586096CC1A43A...

Date: 12/20/2023

EXHIBIT A – STATEMENT OF WORK

I. Product Overview

A. Contractor is authorized to provide Products and Services in the following Groups and Sub-Groups:

1. Primary Products and Services:

Group	Products and Services
A	A3 MFD – *OEM only*
B	A4 MFD – *OEM and Non-OEM*
D	Single-function Printers – *OEM and Non-OEM*
E	Large/Wide Format Equipment – *OEM and Non-OEM*
G	Software – *OEM and Non-OEM*
H	Supplies (consumable) – *OEM and Non-OEM*
I	Managed Print Services

2. Ancillary Products and Services:

Sub-Group	Products and Services
G1	Software Related Services
D1	Specialty Printers (3D, receipt, barcode label, card, cable) – *OEM and Non-OEM*

B. Contractor may not provide Products that have not been approved by the Lead State, with the exception of NSP items, as referenced in **section II.B.3**.

C. Contractor may only offer Devices that meet the minimum requirements as outlined in **section II.A.**

D. Any Products added to the Master Agreement throughout the term of the Contract must be discounted according to the proposed discount for the appropriate Segment or as specified in **section II.A.4.**

E. Contractor may provide MPS under any Group they offer under this Contract. However, MPS may not be provided on any Devices that are being leased to a Purchasing Entity by another Manufacturer, unless Contractor has a written agreement with the Manufacturer to do so. Further, Contractor is not permitted to provide (e.g. sell, lease, rent) Devices under any Group they have NOT been awarded.

F. Contractor may add, remove or modify Products and Services on their Price Lists **once per calendar month**, beginning in September 2024. Modifications do NOT include price increases. Refer to **section 6.1 of the Master Agreement Terms and Conditions** for information regarding pricing.

G. Any Device additions must be updated with Buyer's Lab within ninety (90) days of submission to the Lead State. Failure to adhere to this requirement will result in the Device(s) being removed from the Master Agreement Price List(s) until such time they can be verified on Buyer's Lab. In addition, if a Device is acquired by a Purchasing Entity that is not listed on Buyer's Lab within 90 days of it being added to the Price List, then Contractor shall remove the Device from the Purchasing Entity location and substitute it with a Device of equal or greater value, at no charge to the Purchasing Entity. This substituted Device must be on the Price List, AND listed on Buyer's Lab.

II. Master Agreement Deliverables

A. Primary Product and Service Offerings

1. Group Categories. Segments shall be utilized to distinguish the various speeds of the Devices within Groups. The speeds are denoted in Page per Minute (PPM). The Segments for each Group are as follows:

Group A – MFD, A3	
Segment	**PPM**
2	20 – 30
3	31 – 40
4	41 – 50
5	51 – 60
6	61 – 70
7	71 – 90

Group B – MFD, A4	
Segment	**PPM**
1	Up to 20
2	21 - 30
3	31 - 40
4	41 - 50
5	51 - 60
6	61+

Group D – Single-function Printers	
Segment	**PPM**
1	Up to 20
2	21 – 40
3	41 – 60
4	61+

Group E – Large/Wide Format Equipment			
Segment	**A1 or D Size PPM***	**Width – Office**	**Width - Industry**
Low	0 – 3	24" – 44"	46" and higher
Medium Low	4 - 9	24" – 44"	46" and higher
Medium High	10 - 19	24" – 44"	46" and higher
High	20+	24" – 44"	46" and higher

*Speeds denoted above are based on b&w output

DocuSign Envelope ID: C764E410-020D-4DE5-99C8-4C5B8EF55B29

2. **Device Configurations.** Devices must be equipped, at a minimum, with the following Accessories/capabilities:

2.1 Group A – MFD, A3

- **a.** New power filter;
- **b.** Duplex for Segment 3 and above;
- **c.** Standard paper drawer(s) equal to or greater than:
  - **i)** One (1) paper supply for Segment 2;
  - **ii)** Two (2) paper drawers for Segments 3 and 4; and/or
  - **iii)** 2,000 sheet paper capacity for Segments 5 and above.
  - **iv)** Paper size capacity up to 11” x 17”; and
  - **v)** Bypass paper supply, if applicable for Segment.

2.2 Group B – MFD, A4

- **a.** New power filter;
- **b.** Bypass paper supply;
- **c.** Standard paper drawer(s) equal to or greater than:
  - **i)** One (1) paper supply for Segments 1 and 2;
  - **ii)** Two (2) paper drawers for Segments 3 and 4; and/or
  - **iii)** 1,000 sheet capacity for Segments 5 and above.
- **d.** Paper size capacity up to 8 1/2” x 14”; and
- **e.** Envelope adjustment capability.
- **a.** Network connectivity.

2.3 Group D – Single-function Printers

- **a.** Must include an inkjet, light emitting diode (LED), or laser print engine;
- **b.** Standard paper drawer(s);
- **c.** Standard paper capacity; and
- **d.** Network connectivity.

2.4 Group E – Large/Wide Format Equipment

- **a.** Hard-Disk drive;
- **b.** Network connectivity;
- **c.** Touch screen control panel; and
- **d.** Automatic Media Selection – a built-on sensor detects the size of the original and the proper media size is then selected.

3. **Device Standards.** Devices must meet the following requirements:

DocuSign Envelope ID: C764E410-020D-4DE5-99C8-4C5B8EF55B29

3.1 Group A Base Units are OEM only.

3.2 Group A and Group B must be EPEAT registered to a minimum of Bronze Standard within one (1) year of being added to the Master Agreement Price List.

3.3 Group D must be Energy Star compliant or EPEAT registered to a minimum of Bronze Standard within one (1) year of being added to the Master Agreement Price List.

3.4 Group E must be Energy Star compliant and registered within one (1) year of being added to the Master Agreement Price List.

3.5 If Contractor Devices fail to meet the EPEAT Bronze Standard, or be Energy Star compliant (applicable to Group D and E Devices only) within one (1) year, then they will be removed from the Price List. If said Devices have already been placed at a Purchasing Entity's location, then Contractor must replace the Devices with a comparable, qualified model, at no cost to the Purchasing Entity.

3.6 All Devices must be Newly Manufactured, current, Remanufactured, or Refurbished, except as specified in a Participating Addendum. Discontinued Devices are not permitted to be offered under the Master Agreement.

3.7 Devices, when installed, and if available, must be set-up to receive automatic software updates and patches.

3.8 Device specifications must be published on the Contractor website.

3.9 MSRP must not exceed what is listed with Buyers Laboratory Inc., or List Price must not exceed what is published on the Manufacturer's website.

3.10 Devices must maintain a PPM speed, according to Segment classification.

3.11 Devices must be compatible with using recycled paper, up to and including, 100% Post-Consumer Waste (PCW) paper. Contractor may not fault the use of recycled paper for Device failures, as long as the recycled paper in use meets the standard paper specifications (e.g., multi-purpose, copy, or laser paper).

4. Device Exceptions

4.1 Group B, Group D, Sub-Group D1, and Group E, will not be restricted to OEM, and do not have to be Private Labeled.

4.2 Digital Duplicators may be offered by Contractor under Group A, and must be priced based on the minimum discount offered in the Segment to which they most closely relate.

4.3 Under Group E, Contractor may offer Large/Wide Format Equipment that accommodates **all** paper sizes. Pricing shall be based on the discount offered for the Segment in which the Device belongs.

5. Accessories

5.1 Contractor shall provide OEM and/or Third Party compatible Accessories that compliment or enhance the features of the Device.

5.2 Contractor may also maintain a separate price list for Accessories for Base Units that have been discontinued. The pricing must be based on the same discount offered, per the 'Discount from MSRP' tab, on the applicable Group Price List.

5.3 Purchasing Entities may add Accessories to Devices that have been purchased, leased or rented under prior NASPO ValuePoint Master Agreements, as well as via any other means. If the Device is currently being leased, Purchasing Entity must obtain Contractor approval to add Accessories. Purchasing Entities shall also be advised that obtaining Accessories from a Third Party and not the Contractor or their Dealer may void certain warranty or maintenance agreement provisions.

6. Remanufactured and Refurbished Equipment

6.1 Contractor may offer Remanufactured and/or Refurbished Equipment under any Group.

6.2 Remanufactured and Refurbished Equipment is not required to be EPEAT registered or Energy Star compliant.

6.3 Equipment can be acquired via a purchase or lease agreement.

6.4 Contractor must notify the Purchasing Entity in writing, when Remanufactured or Refurbished Equipment is being offered.

6.5 All Remanufactured or Refurbished Equipment must be clearly labeled as such, and must be certified by the Manufacturer.

6.6 Remanufactured Equipment must be priced according to the minimum discount offered for similar Equipment in the same Group and Segment of the resulting Master Agreement.

6.7 Refurbished Equipment shall be offered at a minimum discount of 10% less than the lowest priced Device of the Group and Segment to which the Refurbished Equipment belongs.

6.8 Service and Supplies for Remanufactured and Refurbished Equipment will receive the same pricing as the Published Price for the Group and Segment to which it belongs.

7. Group G - Software

7.1 May be provided by Contractor to enhance the capabilities of the Devices, or may be provided as a standalone option on any owned or leased Device.

7.2 Software pricing for unique designs or complex configurations will be quoted on a case by case basis.

7.3 Contractor may provide OEM and/or Third Party software.

7.4 All software drivers shall be, at a minimum, Windows 10 compliant, and all Devices must have universal software drivers.

7.5 Purchasing Entities that acquire software shall be subject to the license agreements distributed with such software, provided such terms do not contradict

the language in the Master Agreement, and unless otherwise stated in a Participating Addendum.

7.6 Software Subscriptions

a. Software pricing shall be inclusive of available software patches and any updates.

b. Purchasing Entities shall have the option to finance software subscriptions by utilizing the proposed lease rates.

c. Any new releases of software versions (upgrades) shall be chargeable to the Purchasing Entity; however, Contractor may not charge for the installation of the software upgrade, unless installation is excessive, and charges are agreed to by Purchasing Entity.

d. License fees and support fees shall remain firm throughout the term of the agreement.

e. Software subscriptions shall not be subject to automatic renewals, unless otherwise agreed to in an Order.

f. Contractor shall be responsible for communicating all updates, patches, and new releases/versions to Purchasing Entities.

g. Contractor shall provide a web-based or toll-free hotline during Normal Business Hours for Purchasing Entities to report software problems or answer software related questions.

8. Group H – Supplies (consumable)

8.1 Contractor may offer OEM or compatible Ink and Roll paper for Group E Devices. The Ink and/or paper may be purchased as standalone items, and will not be included as part of a Maintenance Agreement, nor will it be wrapped into the Total Monthly Payment on a lease agreement.

8.2 Contractor may offer OEM or compatible consumable Supplies for Groups A, B, and D, as well as Sub-Group D1. These Supplies may be purchased as standalone items or included as part of a Maintenance Agreement. Under no circumstances may the Supplies, regardless of quantity, be financed, unless they are start-up Supplies. All compatible Supplies must meet OEM standards for performance and quality. The Supplies that may be offered are:

a. Toner;

b. Staples;

c. Ink;

d. Print Cartridges;

e. Imaging Drums;

f. Fuser Kits;

g. Cleaning Kits;

h. Transfer Kits;

i. Waste Toner Bottles;

j. Fuser Oil;

k. Ozone Filters;

l. Ribbon;

m. Developer;

n. Rollers and Pads; and

o. Maintenance Kits.

8.3 Toner must be free of carcinogenic, mutagenic, or teratogenic substances, and should avoid petroleum inks and inks with high volatile compounds. Toner cartridges should also be remanufactured, contain recycled content, **or** be bio-based.

8.4 Contractor shall provide the Purchasing Entity with a method to return the empty toner cartridges at no additional charge.

9. Service Offerings

9.1 Group I - Managed Print Services

a. The main components of an MPS engagement are needs assessment, selective or general replacement of Devices, and the Service, parts and Supplies needed to operate the new and/or existing Devices, including existing Third Party Devices as owned by the Purchasing Entity. The Contractor tracks how the Device fleet is being used, the problems associated with that use, and customer satisfaction in regards to meeting statement of work objectives.

b. In addition to the ongoing monitoring and management of a fleet of Devices, Contractor must also offer project implementation Services, and customer help-desk support and training.

c. Contractor may also offer hourly Services for consulting purposes, project management, change management plans, and other staffed Services which meet customer needs such as to operate copy centers or complete back file scanning projects.

d. MPS may also include enterprise content management Services and workflow optimization components, such as scanning and document capture solutions, developing custom applications for smart MFDs that automate paper-intensive document workflows and route scanned pages to document management systems. It can also be extended to include the restructuring of document workflows. Some MPS engagements may be designed to improve document security or to reduce print volumes and power consumption for environmental reasons.

e. All MPS engagements shall require the Contractor and Purchasing Entity to complete a detailed statement of work, similar to the format referenced in **Attachment 10, Toshiba Sample MPS Statement of Work**, and it must be

approved by both parties prior to the initiation of any engagement.

f. Any MPS engagement shall include the following:

i) **Free Initial Assessment** (includes, but is not limited to: document workflow; identification of Service, Supplies, and parts; current output; total cost of ownership; employee to Device ratio; preliminary estimated cost savings);

ii) **Implementation** (e.g. plan development; hardware and software installation and set-up);

iii) **Remote Device Monitoring** (e.g. job accounting; automated meter reads; automated toner replenishment);

iv) **End-user Support** (e.g. training; Help Desk); and

v) **Account management** (e.g. reporting; invoicing; customer business reviews).

g. The MPS engagement may include, but is not limited to, the following:

i) **Professional Services** (e.g. consulting; project management; record management; network and data security; document workflow consulting; document scanning; back-file conversion; mail-room Services);

ii) **Cost-based Assessment** (e.g. asset mapping; end-user survey; detailed recommendation; analysis and plan design);

iii) **Change Management;**

iv) **Maintenance** (e.g. Preventative Maintenance; Service and repair; on-site break/fix; parts management; warranty management);

v) **Ongoing Fleet Management and Optimization** (e.g. consumable spend; continual assessments; green initiatives; add/move/change Services; disaster recovery).

vi) **Software and Cloud Solutions** (e.g. mobile print, pull-print, enterprise content management; automated workflow; capture and route; security); and

vii) **Cartridge Recycling**.

h. The free initial assessment shall not constitute a commitment on behalf of the Purchasing Entity. Upon request from a Purchasing Entity, Contractor must provide the assessment with the understanding that the Purchasing Entity is under no obligation to enter into an MPS engagement.

i. MPS pricing and billing options shall be flexible and the Purchasing Entity will drive the complexity of the solution required with a staged approach to implementation.

9.2 Maintenance Agreements. No Maintenance Agreement shall be subject to automatic renewals.

DocuSign Envelope ID: C764E410-020D-4DE5-99C8-4C5B8EF55B29

a. Pricing

i) Pricing must include a zero base, cost per click rate for b&w and/or color for Groups A, B, and D.

ii) Pricing for a monthly base charge, a set copy allowance and an overage rate for b&w and/or color may also be provided.

iii) Pricing for a monthly base charge, a set copy allowance, an overage rate for b&w and/or color, and Supplies may also be provided.

iv) Flat Rate Fee pricing must be provided that includes all parts, labor, Preventative Maintenance, and Service Calls for Groups A, B, and D. Supplies may or may not be included.

v) Pricing for ALL Groups may also be provided that includes all parts, labor, Preventative Maintenance (if applicable), and Service Calls, but excludes Supplies.

vi) Paper and ink for Group E Devices shall not be included as part of the Service and Supply pricing.

vii) Contractor may increase their Service and Supply pricing to include staples (if applicable to the Device).

viii) Contractor may provide a flat rate fee without staples, and a flat rate fee with staples. All flat rate fees shall allow for an annual increase of up to 5%.

ix) Contractor may charge flat rate fees for Services performed on any Accessories.

x) Service Calls due to misuse, neglect or abuse shall not be covered by the Maintenance Agreement, and Contractor and Authorized Dealers may bill the Purchasing Entity at an hourly rate for Services rendered.

xi) 11”x17” impressions may be counted as one (1) click or two (2) clicks on Group A Devices.

xii) A two-sided document shall be counted as two (2) clicks.

xiii) Contractor must not charge for scans on any MFD.

b. Initial Term

i) Pricing shall remain firm for the initial term of the Maintenance Agreement (e.g. 12, 24, 36 months etc.). Upon renewal of the Maintenance Agreement, Contractor may adjust the pricing, as long as the pricing does not exceed Master Agreement rates.

ii) For leased Devices, the total Maintenance Agreement term shall be equal to the term of the lease (e.g. 24, 36, 48 months etc.).

iii) For purchased Devices, the initial term is determined by the Purchasing Entity, as long as it does not exceed 60 months.

c. Renewal Term

If a Purchasing Entity wishes to renew a Maintenance Agreement for Devices

DocuSign Envelope ID: C764E410-020D-4DE5-99C8-4C5B8EF55B29

that were acquired under prior Master Agreement (RFP-NP-18-001) or Master Agreement (3091), then **section II.A (9.2)(h)** shall apply.

d. Blended Rates

i) Contractor must have the ability to blend the Service and Supply costs over a large Device fleet, and the Blended Rate must cover all units in the fleet.

ii) The Blended Rate must be divided between b&w and color.

iii) Contractor shall provide the Purchasing Entity with the Blended Rate calculation prior to Order placement.

iv) Utilizing a Blended Rate shall be at the discretion of the Participating State or Entity, and/or the Purchasing Entity.

e. Manual Meter Reads

i) Contractor must have an electronic method for collecting meter reads from a Purchasing Entity.

ii) Meter reads may be submitted via the Contractor's online portal, or through email, or facsimile.

iii) A Participating State or Entity may also elect, at their discretion, to submit meter reads through the Device.

f. Customer Owned Devices

i) Purchasing Entities may elect to enter into a Maintenance Agreement for Devices they already own, or Devices they acquire through an up-front purchase.

ii) The Maintenance Agreement may be priced on a flat rate fee, which shall include parts, labor, Preventative Maintenance (if applicable) and Service calls. Supplies may or may not be included.

g. Leased Devices

i) Contractor shall be required to provide a Maintenance Agreement on all Devices that are leased by a Purchasing Entity.

ii) The Maintenance Agreement shall be priced based on a cost per click rate, or a monthly base charge.

h. Legacy Devices

i) Upon request from the Purchasing Entity, Contractor may provide a Maintenance Agreement on any Device that is owned or was leased or rented through Master Agreement (RFP-NP-18-001), Master Agreement (3091), or via any other means, providing the following conditions are met:

1) The Device has not reached the end of its Useful Life;

2) The maximum term of the Maintenance Agreement does not exceed the Useful Life of the Device, unless otherwise specified in a Participating Addendum; and

3) The Maintenance Agreement adheres to the same requirements as outlined in **sections II.A (9.2)(f)** and **II.A (9.2)(g)**.

ii) Devices that were previously serviced by another Dealer or Manufacturer must be inspected and repaired, if necessary. Upon mutual agreement, Contractor may charge Purchasing Entity for any parts and/or labor required to bring the Device up to acceptable maintenance levels.

iii) If the Device has been at the Purchasing Entity's location for less than five (5) years, then Maintenance Agreement pricing shall not exceed the new Master Agreement pricing, until the Purchasing Entity reaches the five (5) year mark. Refer to **section II.A (9.2)(h)(iv)** below for additional information.

iv) If the Device has been at the Purchasing Entity's location for more than five (5) years, then Maintenance Agreement pricing shall not exceed 120% of the Service and Supply pricing in the new Master Agreement.

B. Ancillary Product and Service Offerings

1. Sub-Group Categories. The following Products and Services are sub-groups of the Primary Product and Service Offering Groups.

1.1 Sub-Group G1 – Software Related Services. This is a sub-group of Group G – Software. This sub-group shall include, but not be limited to, the following Services:

a. Cloud-based scanning (software as a service, enterprise content management); and

b. Industrial Print solutions (back-file conversion, enterprise content management).

1.2 Sub-Group D1 – Specialty Printers. This is a sub-group of Group D – Single-Function Printers. Products offered under this sub-group are not restricted to OEM, and may include, but not be limited to, the following:

a. Barcode labels;

b. High Volume Inkjet;

c. 3D Printers;

d. Receipt printers;

e. Card printers; and

f. Cable printers.

2. Sub-Group Category Discounts. Products in Sub-Group D1 must be discounted at a minimum of 5% for OEM and a minimum of 2% for Non-OEM, unless such discounts would exceed the discount amount offered for OEM and Non-OEM within Group D.

3. Open Market Items

3.1 Contractor may offer Not Specifically Priced (NSP) items that compliment or enhance the Devices and/or Services offered under the Master Agreement. NSP items will **not** include:

a. Interactive White boards;

b. Computers, monitors, or other related hardware items;

c. Fax machines;

d. Kiosk machines;

e. Overhead Projectors; and

f. Cameras.

3.2 NSP items may only be acquired through the Contractor or their Authorized Dealer and must be reported quarterly with all other sales under the Master Agreement.

3.3 NSP items must be priced at a minimum discount of 15% from MSRP or List Price.

3.4 NSP items may be offered to a Purchasing Entity as a stand-alone option, and the maximum allowable amount of all NSP items in a single Order shall be determined by the Participating State or Entity.

3.5 It shall be at the discretion of the Participating State or Entity to allow Open Market Items in their Participating Addendum.

4. Emerging Technologies

4.1 Upon approval from the Lead State, Contractor may add new, related technology to the resulting Master Agreement.

4.2 Technology is not restricted to OEM, nor is it required to be Private Labeled.

4.3 Any new technology that a Contractor requests to add to their Price List must contain a full description of the Product, the MSRP and pricing information, and an explanation/justification as to how the Product conforms to the requirements of the RFP and Master Agreement.

4.4 Any new technology must be priced according to the lowest discount offered for any Product under the Master Agreement. No discount or a 0% discount does not qualify as a "lowest" discount.

III. Purchase and Lease Programs

A. Acquisition Methods. Contractor may offer the following:

Financial Vehicle	Standard Terms Offered
Purchase	N/A
Fair Market Value Lease	12,18, 24, 36, 48 and 60 months
Capital Lease	
Straight Lease	

1. All Devices on Contractor's Price List may be purchased or leased, either as a packaged-deal, or stand-alone item.

B. Device Trade-In

1. A Purchasing Entity shall have the option, at the Contractors sole discretion, and based upon Participating State or Entity regulations and laws, and Purchasing Entity policies, to

do a Device Trade-In, when placing a purchase or lease Order.

2. The value for the Device Trade-In shall be negotiated by the Purchasing Entity and the Contractor, and shall not include any disposal or shipping fees.

C. Lease Rates

1. Contractor may elect to include property tax in their lease rates, or they may bill the Purchasing Entity separately for property tax.

2. Once a Purchasing Entity enters into a lease agreement, the lease rate must remain fixed throughout the Initial Lease Term, regardless of whether the Contractor had increased their lease rates in the Master Agreement Price Lists. If Contractor has decreased their lease rates in their Price Lists, then they may extend that lower rate to the Purchasing Entity for new orders.

3. Device Payments for Renewal Terms must never exceed Master Agreement pricing.

4. If a Purchasing Entity enters into a Renewal Term, then the Device Payment will be subject to the lease rates listed in the most recent Price Lists posted on the NASPO ValuePoint website.

5. Contractor may update lease rates on a quarterly basis to allow for changes in the financial market. The rates must be indexed against the US Daily Treasury Yield Curve Rates, or a comparable index, and must be the rate in effect at the end of each calendar quarter.

6. Lease rates must be proposed as a decimal multiplying factor in such a manner that the purchase price of the Device may be multiplied by the lease rate to arrive at the resulting monthly Device Payment. Proposed rates must include the following information:

6.1 The Daily Treasury Yield Curve (or comparable index) Rate;

6.2 The date used for the Daily Treasury Yield Curve (or comparable index) Rate;

a. The fixed margin for each lease type being proposed, and how that margin is determined; and

b. The methodology for determining the 48 month base rate if a 4-year rate is not published.

6.3 Contractor must offer Coterminous lease rates to any Purchasing Entity wishing to add Products to an existing lease agreement. The calculation for the Coterminous lease rates must adhere to the following methodology:

***For example**: A customer enters into a 36 month FMV Lease, and 12 months into that lease, they decide to add an Accessory to the Base Unit. The Contractor shall divide the 36 month cumulative Device Payment by 24 months to arrive at the monthly Coterminous payment for that Accessory. That payment will then be added to the existing Device Payment. The new Total Monthly Payment must then be disclosed to the Purchasing Entity.*

D. Leasing Overview

1. All lease programs shall remain with the Contractor or Authorized Dealer through an in-house leasing program, or through the financial branch or subsidiary of Contractor. In

DocuSign Envelope ID: C764E410-020D-4DE5-99C8-4C5B8EF55B29

addition, Contractor and their Authorized Dealer may use Third Party leasing companies, however; all Third Party leasing company documents must be reviewed and approved by the Lead State and said documents must be incorporated into the Master Agreement before any Participating State, Participating Entity, or Purchasing Entity can use them. It will be at the discretion of the Participating State, Participating Entity, or the Purchasing Entity as to whether billing shall be in the name of Contractor, Authorized Dealer or Third Party leasing company. All contractual obligations however, will still be the responsibility of the Contractor.

2. A Purchasing Entity may lease Devices pursuant to the terms and conditions in this Master Agreement, and according to the requirements listed in their states' Participating Addendum.

3. Lease agreements shall not be subject to automatic renewals. This is non-negotiable in any Participating Addendum or Order.

4. A lease agreement issued prior to the termination of the Master Agreement and Participating Addendum, shall survive the termination of the Master Agreement and the Participating Addendum, and all terms and conditions of the Master Agreement and Participating Addendum shall continue to apply.

5. With the exception of a $1 Buyout Lease arrangement, or unless exercising the purchase option on an FMV Lease, a Purchasing Entity shall return the Device at the end of the Initial Lease Term, or at the end of the Renewal Lease Term, or the Contractor may pick the Device up, without any further financial obligations to the Purchasing Entity.

6. Device pickups must be performed within thirty (30) calendar days of the end of the Initial or Renewal Term.

7. Device returns must be performed within thirty (30) calendar days after the Contractor or Authorized Dealer provides return shipping instructions to the Purchasing Entity.

8. If Purchasing Entity fails to make Device available for pickup after thirty (30) calendar days, then Contractor or Authorized Dealer may bill the Purchasing Entity, at the total monthly payment amount for such Device, for each month that the Device remains at Purchasing Entity's location. Contractor or Authorized Dealer is not permitted to bill the Purchasing Entity for failure of Contractor or Authorized Dealer to pickup the Device when Purchasing Entity has made it available.

9. Contractor and/or Authorized Dealers shall be responsible for all Device pickup and return costs.

10. The maximum term on any Initial Lease Term shall be 60 months.

11. The length of a Renewal Term shall be at the discretion of the Participating State or Entity, but at no time shall the Renewal Term exceed the Useful Life of the Device.

12. All Renewal Terms shall be billed on a monthly basis.

13. If a Purchasing Entity elects to enter into a month to month Renewal Term, they may cancel at anytime, without penalty, by giving Contractor thirty (30) days advance, written notice.

14. If a Purchasing Entity elects to enter into a 12-month Renewal Term, the Renewal Term will automatically terminate at the end of the 12-month period, unless the Purchasing Entity has notified the Contractor that they wish to enter into a new Renewal Term. If a Purchasing Entity wants to cancel their 12-month Renewal Term early, then early termination fees shall apply, and will be equivalent to the remaining stream of Equipment payments only (i.e. less maintenance).

E. Leasing Options

1. FMV Lease

1.1 A Purchasing Entity shall have the option to enter into an Initial Lease Term of 12,18, 24, 36, 48, or 60 months for Group A, Group B, Group D, Sub-Group D1, and Group E, based upon the Contractor's available options, and at the discretion of the Participating State or Entity.

1.2 Upon the expiration of the Initial Lease Term, a Purchasing Entity may do one of the following:

a. Exercise their purchase option;

b. Renew the lease on a month to month basis, or a 12 month basis, at the discretion of the Participating State or Entity; or

c. Return the Device to the Contractor, or have the Contractor pick the Device up.

2. Capital Lease ($1 Buyout Lease)

2.1 A Purchasing Entity shall have the option to enter into an Initial Lease Term of 12, 18, 24, 36, 48, or 60 months for Group A, Group B, Group D, Sub-Group D1, and Group E, based upon the Contractor's available options, and at the discretion of the Participating State or Entity.

2.2 Upon the expiration of the Initial Lease Term, the Contractor shall provide title to the Device to the Purchasing Entity, or as otherwise determined in a Participating Addendum or an Order, and the Purchasing Entity shall not be subject to any additional expense in order to assume possession of the Device.

3. Straight Lease

3.1 A Purchasing Entity shall have the option to enter into an Initial Lease Term of 12, 18, 24, 36, 48, or 60 months for Group A, Group B, Group D, Sub-Group D1, and Group E, based upon the Contractor's available options, and at the discretion of the Participating State or Entity.

3.2 Upon the expiration of the Initial Lease Term, a Purchasing Entity may do one of the following:

a. Renew the lease on a month to month basis, or a 12 month basis, at the discretion of the Participating State or Entity; or

b. Return the Device to the Contractor, or have the Contractor pick the Device up.

F. Leasing Terms and Conditions

DocuSign Envelope ID: C764E410-020D-4DE5-99C8-4C5B8EF55B29

1. **Possession and Return of Leased Devices**

   1.1 The Purchasing Entity is responsible for risk of loss to the Devices while the Devices are in Purchasing Entity's possession. Purchasing Entity shall be relieved of all risks of loss or damage to the Devices during periods of transportation and de-installation.

   1.2 Contractor or Authorized Dealer must notify a Purchasing Entity, in writing, of their End of Term (EOT) options at least sixty (60) days prior to the end of any Initial Lease Term. Such notification may include, but not be limited to, the following:

   a. Any acquisition or return options, based on the type of lease agreement;

   b. Any renewal options, if applicable; and/or

   c. Hard drive removal and surrender cost, if applicable.

   1.3 If a Purchasing Entity desires to exercise a purchase, renewal, or return of the Device, it shall give Contractor at least thirty (30) days written notice prior to the expiration of such lease term. Notwithstanding anything to the contrary, if Purchasing Entity fails to notify Contractor of its intent with respect to the exercise of a purchase, renewal, or return of the Device, the Initial Lease Term shall be terminated on the date as stated in the Order and removal of the Device will be mutually arranged, unless otherwise specified in an Order.

   1.4 If the Purchasing Entity does not exercise the purchase or renewal option, it will immediately make the Device available to Contractor in as good of condition as when Purchasing Entity received it, except for ordinary wear and tear.

2. **Payment.** The first scheduled payment (as specified in the applicable Order), will be due following the Acceptance of the Device(s), or such later date as Contractor may designate. The remaining payments will be due on the same day of each subsequent month, unless otherwise specified in the applicable Order.

3. **Buyout to Keep Option.** A Purchasing Entity must notify the Contractor or Authorized Dealer, in writing, at least thirty (30) days in advance, if they wish to exercise the Buyout to Keep option on an FMV or Capital Lease. A Buyout to Keep option is not available on a Straight Lease.

4. **Buyout to Return Option.** A Purchasing Entity must notify the Contractor or Authorized Dealer, in writing, at least thirty (30) days in advance, if they wish to exercise the Buyout to Return option on an FMV or Straight Lease, and return the Device to the Contractor in good working condition (ordinary wear and tear excepted).

5. **Device Upgrade or Downgrade**. A Purchasing Entity may do a Device Upgrade or Downgrade on a lease at anytime throughout the term of the lease agreement. The Purchasing Entity and the Contractor shall negotiate the price of the Device Upgrade or Downgrade, but at no time shall the total cost of the Device Upgrade or Downgrade be less than the remaining stream of Device Payments.

6. **Non-appropriation of Funds.** The continuation of any lease agreement will be subject to, and contingent upon, sufficient funds being made available by the Participating State Legislature and/or federal sources. The Purchasing Entity may terminate any such lease

agreement, and Contractor waives any and all claim(s) for damages, effective immediately upon receipt of written notice (or any date specified therein) if for any reason the Purchasing Entity's funding sources are not available.

7. **Assignment.** Purchasing Entity has no right to sell, transfer, encumber, sublet or assign the Device or any lease agreement without Contractor's prior written consent (which consent shall not be unreasonably withheld).

   7.1 Purchasing Entity agrees that Contractor may not sell or assign any portion of Contractor's interests in the Device and/or these Lease Terms or any Order for leases, without notice to Purchasing Entity even if less than all the payments have been assigned. In that event, the assignee (the "Assignee") will have such rights as Contractor assigns to them, but none of Contractor's obligations (Contractor will keep those obligations) and the rights of the Assignee will not be subject to any claims, defenses or set offs that Purchasing Entity may have against Contractor.

   7.2 No assignment to an Assignee will release Contractor from any obligations Contractor may have to Purchasing Entity.

8. **Early Termination Charges**

   Except in the case of Non-appropriation of funds, FMV, $1 Buyout, and Straight Leases shall be subject to an early termination charge, and shall involve the return of the Device (in good working condition; ordinary wear and tear excepted) by the Purchasing Entity to the Contractor. With respect to the Device, the termination charge shall not exceed the balance of remaining Device Payments (including any current and past due amounts), and with respect to Service or maintenance obligations, the termination charge shall not exceed four (4) months of the Service and Supply base charge or twenty-five percent (25%) of the remaining Maintenance Agreement term, whichever is less.

9. **Default.** Each of the following is a "default" under these lease terms:

   9.1 Purchasing Entity fails to pay any payment or any other amount within forty-five (45) days (or as otherwise agreed to in a Participating Addendum) of its due date;

   9.2 Any representation or warranty made by Purchasing Entity in these lease terms is false or incorrect and Purchasing Entity does not perform any of its obligations under these lease terms, and this failure continues for forty-five (45) days (or as otherwise agreed to in a Participating Addendum) after Contractor has notified Purchasing Entity;

   9.3 Purchasing Entity or any guarantor makes an assignment for the benefit of creditors;

   9.4 Any guarantor dies, stops doing business as a going concern, or transfers all or substantially all of such guarantor's assets; or

   9.5 Purchasing Entity stops doing business as a going concern or transfers all or substantially all of Purchasing Entity's assets.

10. **Remedies.** If a Purchasing Entity defaults on a lease agreement, then Contractor, in addition to, or in lieu of, the remedies set forth in the Master Agreement, and Participating Addendum, may do one or more of the following, at the discretion of the Participating

State or Entity:

10.1 Cancel or terminate any or all Orders, and/or any or all other agreements that Contractor has entered into with Purchasing Entity;

10.2 Require Purchasing Entity to immediately pay to Contractor, as compensation for loss of Contractor's bargain and not as a penalty, a sum equal to:

a. All past due payments and all other amounts payable under the lease agreement;

b. All unpaid payments for the remainder of the lease term, discounted at a rate equal to three percent (3%) per year to the date of default; and

c. Require Purchasing Entity to deliver the Device to Contractor per mutual arrangements.

IV. Contractor Responsibilities and Tasks

A. Service Requirements

1. Technicians. All technicians must be factory trained by the OEM and certified to Service the Devices.

2. Standard Service Levels. Participating States and/or Entities may negotiate their own Service Level Agreement (SLA) with the Contractor. The SLA, must, at a minimum, adhere to the following requirements:

2.1 End-User Training

a. Purchasing Entity may request an initial one-hour training session for each Device ordered under the Contract. Contractor shall provide this initial training, free of charge, via one of the following delivery methods: On-site, web-based, or on-line. The delivery method selected for each Device will be at Contractor's sole discretion. Purchasing Entity should be advised that while this initial one-hour of free training shall be provided by Contractor at Purchasing Entity's request, Contractor will not provide substitutions (e.g. free supplies, deeper discounts, etc.) in lieu of this training.

b. Purchasing Entity may also request an additional one-hour training session for technical support, which shall include network connectivity and print driver installation. This additional training shall be provided via a delivery method mutually agreed upon by Contractor and Purchasing Entity, and at a mutually agreed upon price.

c. If Purchasing Entity elects to exercise the training option, then Contractor shall provide the training within ten (10) Business Days of Purchasing Entity's request.

d. Contractor may offer additional on-site, one-hour training sessions for a flat rate fee. Additional charges for travel and per diem, if applicable, must be disclosed to the Purchasing Entity, and mutually agreed upon, prior to Order placement.

e. Contractor must provide on-site or off-site operational training to designated Purchasing Entity personnel, until the personnel are able to operate the

Device independently. Pricing for operational training shall be based on a flat rate fee. Additional charges for travel and per diem, if applicable, must be disclosed to the Purchasing Entity, and mutually agree upon, prior to Order placement.

f. Contractor shall provide Device literature, user-manuals, and access to on-line resources, if available, at no charge to the Purchasing Entity.

g. For Groups A, B, D, E, and Sub-Group D1, Contractor shall provide a no charge, toll-free end-user technical support number that Purchasing Entities can utilize for everyday minor troubleshooting (i.e. this does not include network connectivity or print driver installation). A Purchasing Entity must be able to obtain assistance during Normal Business Hours.

h. Contractor shall provide phone/technical support within two (2) hours of Purchasing Entity's request for assistance, providing such request, and subsequent support, falls within normal business hours.

2.2 Preventative Maintenance. Contractor must perform all Preventative Maintenance Services at the Manufacturer's suggested intervals, or as specified in an Order. Preventative Maintenance shall not be a requirement on desktop Devices.

2.3 Device Performance

a. Device Downtime shall be computed from the time the Contractor is notified of Device failure until the time in which the Device is fully operational.

b. Device Downtime due to lack of consumable Supplies is not acceptable.

c. Contractor must provide daily communication to the Purchasing Entity regarding inoperable Devices, including updates regarding resolution timeframe, and any parts, Accessories, or Devices on back-order.

2.4 Loaner Device. If any Device in Group A or Group B is inoperable for two (2) Business Days, due to Device malfunction, as reasonably determined by Contractor, then Contractor shall provide the Purchasing Entity with:

a. A loaner Device of similar speed and capabilities until such time as the inoperable Device is now operable; or

b. Upon mutual agreement in Urban areas, provide the Purchasing Entity with off-site manned production capabilities, at the sole cost to the Contractor, to accomplish the work of the Device that is inoperable.

2.5 Repair Parts

a. Contractor shall guarantee the availability of repair parts for a minimum of five (5) years after the Purchasing Entity's Acceptance of any Device.

b. All Device components, spare parts, application software, and ancillary Devices that are supplied under any resulting Master Agreement, must conform to Manufacturer specifications.

c. Contractor shall be responsible for ensuring that any repair parts are operable and installed in accordance with Manufacturer specifications.

d. Repair parts may be new, reconditioned, reprocessed or recovered.

2.6 Service Zones

a. Unless otherwise specified in a Participating Addendum, Contractor shall adhere to the following Service Call Response Times based on the distance that their Service Base Location is from the Purchasing Entity:

Service Zone	Definition	Response Time
Urban	Within 60 miles	4 - 6 Hours, and next Business Day for Group D
Rural	60 – 120 miles	1 - 2 Business Days
Remote*	120+ miles, or only accessible by plane or by boat	4 – 5 Business Days

*Additional fees may apply

b. Repair or replacement of parts and/or Devices shall occur within four (4) Business Days of Contractor arriving at Purchasing Entity's location, with the following exception:

i) If Contractor is drop-shipping a new Device to replace a defective Device, then Purchasing Entity must receive the new Device within five (5) Business Days.

c. Contractor(s) may charge different rates according to each Service Zone.

2.7 Service Logs

a. Contractor shall maintain a Service log which describes the maintenance and repair Services provided for each Device.

b. A no-cost copy of Service logs/reports must be provided to the Purchasing Entity or Participating State or Entity, within five (5) Business Days of the request.

2.8 Device Relocation

a. Device relocation Services include dismantling, packing, transporting, and re-installing Device.

b. Contractor may charge for this Service based on the following table:

Service Zone	Distance from current placement of Device	Charge
1	Within the same building	No Charge Allowed*****
2	Up to 50 miles from building in which Device is currently placed	Flat Rate Fee, plus Per Mile or Hourly Fee
3	More than 50 miles from building in which Device is currently placed	Flat Rate Fee, plus Per Mile or Hourly Fee

*Contractor may charge Purchasing Entities a mutually agreed upon price for special rigging in the event a Purchasing Entity's demographics require such rigging for Zone 1 relocations. The price shall be agreed upon in writing by Contractor and Purchasing Entity prior to any Device relocation in Zone 1.

c. Contractor may not charge for any fees incurred due to fuel or tolls.

d. Moves must be performed within thirty (30) calendar days of the Purchasing Entity request. Request may be verbal or written, but Contractor must confirm the request in writing and provide a date that the move will occur. Written confirmation must be sent to the Purchasing Entity within three (3) Business Days of request. In the event that there will be a delay in these Services, Contractor shall communicate with Purchasing Entity and agree on a mutually beneficial time-frame.

e. Contractor is required to offer Device relocation services for all leased Equipment.

3. Meter Read Invoicing

3.1 In order for Contractor to generate accurate invoices, Purchasing Entities shall provide meter reads within the Contractor's requested time-frame.

3.2 Invoices that are generated without receiving the proper meter read information from the Purchasing Entity will not be considered inaccurate.

3.3 The Purchasing Entity shall provide written notice of any such alleged invoicing issue and the Contractor will be allowed a thirty (30) day cure period to address any such issue. During the thirty (30) day cure period, the Purchasing Entity will not be assessed any late fees for failure to submit payment by the invoice due date.

3.4 Failure on the Contractor's part to maintain accurate invoicing shall result in a $25.00 per instance credit on the following month's invoice from Contractor.

4. Reporting

4.1 Service Level Calculations

a. At the discretion of the Participating State or Entity, Contractor shall produce reports that can be measured against the required SLA components.

b. The Participating State or Entity shall determine how the reports will be utilized and whether liquidated damages will be assessed for failure to meet the SLA requirements. Any liquidated damages or penalty structure shall be defined in the Participating State or Entity's Participating Addendum.

4.2 Periodic Reporting. Contractor shall provide periodic reporting to all Purchasing Entities upon request. The reports shall be provided on a quarterly basis, or at the discretion of the Participating State or Entity.

a. The report shall include the following:

i) Number of Service Calls placed;

ii) Response Time per Device;

iii) Dates that Preventative Maintenance was performed, if applicable; and

iv) Estimated end of Useful Life per Device.

b. The report may include, but not be limited to, the following:

i) Location of Devices;

ii) Click usage per Device; and

iii) EPEAT certification level of each Device.

B. Customer Service

1. **Key Personnel.** Contractor shall ensure that staff has been allocated appropriately to ensure compliance with the resulting Master Agreement and subsequent Participating State or Entity requirements and that the individuals occupying the Key Personnel positions have adequate experience and knowledge with successful implementation and management of a national cooperative contract. Contractor shall provide a single point of contact for the following:

   1.1 **Master Agreement Contract Administrato**r – shall be the Lead State's primary contact in regards to Contract negotiations, amendments, Product and Price List updates, and any other information or documentation relating to the Master Agreement;

   1.2 **NASPO ValuePoint Reporting Contact** – shall be responsible for submitting quarterly reports and the quarterly Administrative Fee to the appropriate personnel;

   1.3 **Master Agreement Marketing Manager** – shall be responsible for marketing the resulting Master Agreement, as well as creating Participating State websites, and ensuring that all uploaded data and content is current; and

   1.4 **National Service Manager** – shall be responsible for overseeing the Regional Service Managers, Field Service Technicians, training, and inside Service operations. This position will work with the Lead State Contract Administrator to ensure contractual obligations are met, while providing leadership for the Contractor's operations, as well as strategic planning of the Service department.

2. **Single Point of Contact**. Contractor shall provide a single point of contact for each Participating State, who will handle any questions regarding the Products provided, as well as pricing, delivery, billing, reporting, status of Orders, customer complaints and escalated issues.

3. **Service and Support Hours.** Contractor must provide full Service and support for Products during Normal Business Hours.

4. **Customer Service Team.** Contractor shall also have a designated customer service team who shall be available by phone (via local or toll free number), fax, or email during Normal Business Hours.

5. **Additional Coverage**. Contractor may offer additional coverage beyond Normal Business Hours for any Device that needs to be serviced. Such coverage shall be billed to the Purchasing Entity at an hourly rate.

DocuSign Envelope ID: C764E410-020D-4DE5-99C8-4C5B8EF55B29

6. **Online Access**. Customer service representatives shall have online access to account information and be able to respond to inquiries concerning the status of Orders (shipped or pending), delivery, back-orders, pricing, Product availability, Product information, and account and billing questions.

C. Authorized Dealers

1. Contractor can engage Authorized Dealers to provide Products and/or Services.

2. In the event a Contractor elects to use Authorized Dealers in the performance of the specifications, the Contractor shall serve as the primary Contractor, and shall be fully accountable for assuring that their Authorized Dealers comply with the terms and conditions of the resulting Master Agreement, and any Participating Addendum, and shall be liable in the event Authorized Dealers fail to comply with such terms and conditions.

3. Authorized Dealers shall be expected to stay current with Contractor Products, pricing, Master Agreement, and Participating Addendum requirements, and Contractor shall provide training to all of their Authorized Dealers at least once per calendar year, or as otherwise determined by the Lead State.

4. Authorized Dealers shall have the ability to accept Orders from a Purchasing Entity and invoice them directly, unless otherwise stated in a Participating Addendum.

5. Contractor shall send notice to the Lead State, utilizing **Exhibit C, Authorized Dealer Form** and **Exhibit D, Authorized Dealers by State,** within three (3) calendar days of engaging or removing a Dealer.

6. The Lead State reserves the right to deny the addition of any Authorized Dealer and will provide notification to the Contractor with justification as to why the decision was reached. In addition, it will be at the discretion of each Participating State or Entity as to whether they will utilize the Authorized Dealers as approved by the Lead State. Under no circumstances is a Participating State or Entity permitted to use a Dealer that has not been approved by the Lead State.

7. If an Authorized Dealer is performing unsatisfactorily, or is not in compliance with the Master Agreement, then it shall be at the discretion of the Lead State, upon recommendation from the Participating State, to:

   7.1 Require the Dealer to attend remedial training with either the Contractor or the Lead State or;

   7.2 Remove the Dealer from the Contract, or in the case of multiple branch locations in one state, or multiple states, remove them as a Dealer from the location in which they are not in compliance.

D. Device Demonstration Requirements

1. Contractor may offer trial or demonstration Devices for Group A, Group B, Group D, Sub-Group D1, and Group E.

2. Trial or demonstration Devices may be new or used; however, no used, Remanufactured, or Refurbished Devices shall be converted to a purchase or lease.

3. At the discretion of the Participating State or Entity, and upon request by a Purchasing Entity, showroom Devices for Groups A and B may be converted to a purchase or lease, providing the following conditions are met:

3.1 The meter count on Group A and Group B Devices does not exceed 10,000 copies total (i.e. b&w and color combined);

3.2 The Device must be discounted by at least 5% off of the Master Agreement pricing for that same Device; and

3.3 The Purchasing Entity and the Contractor indicate on the Order that the Device is a showroom model.

4. Any trial or demonstration period shall be free to the Purchasing Entity and shall not exceed thirty (30) calendar days.

5. If Purchasing Entity does not make the demonstration Device available for pickup after thirty (30) calendar days, then Contractor may bill the Purchasing Entity for use of Device for each day that it remains at Purchasing Entity's location. Such rates shall not exceed current market standards.

E. Device Installation Requirements

1. Prior to Order Acceptance, Contractor must advise Purchasing Entity of any specialized installation and site requirements for the delivery and installation of Device. This information should include, but is not limited to, the following:

1.1 Air conditioning;

1.2 Electrical;

1.3 Special grounding;

1.4 Cabling;

1.5 Space;

1.6 Humidity and temperature limits; and

1.7 Other considerations critical to the installation.

2. The Purchasing Entity shall be responsible for furnishing and installing any special wiring or dedicated lines.

3. Network installation shall include configuration of the Device for the proper network protocols, and installation of the appropriate print drivers on up to five (5) computers per Device, or as otherwise specified in a Participating Addendum.

4. If applicable, all Devices must be set-up with Preventative Maintenance notifications turned on, and with the most environmentally responsible defaults enabled, including Energy Star saving settings.

5. Contractor may charge for excessive installation requirements, including rigging, access alterations, and access to non-ground floors via stairs. Any such excessive installation charges must be quoted to the Purchasing Entity prior to the signature of any Order, and shall be based on the actual expenditures of Contractor or Authorized Dealer.

6. Contractor or Authorized Dealers shall affix a label or a decal to the Device at the time of installation which shows the name, address, and telephone number of Contractor or Authorized Dealer responsible for warranty Service of the Device.

7. Contractor shall clean-up and remove all debris and rubbish resulting from their work as required by the Purchasing Entity. Upon completion of the work, the premises shall be left in good repair and in an orderly, neat, clean, and unobstructed condition.

F. Security Requirements

1. Network and Data Security

1.1 Devices may be configured to include a variety of data security features. The set-up of such features shall be at the discretion of the Purchasing Entity, and all costs associated with their implementation must be conveyed by Contractor prior to Order placement.

1.2 Contractor will not be permitted to download, transfer, or access print data stored on the Device in either hard drive or chip memory. Only system management accessibility will be allowed.

1.3 Contractor shall ensure that delivery and performance of all Services shall adhere to the requirements and standards as outlined in each Participating State or Entity's Participating Addendum.

2. **Sensitive Information**. Sensitive information that is contained in any Legacy Devices or applications shall be encrypted if practical. In addition, sensitive data will be encrypted in all newly developed applications. Since sensitive information is subjective, it shall be defined by each Participating State or Entity in their Participating Addendum.

3. **Data Breach.** Contractor shall have an incident response process that follows National Institute of Standards and Technology (NIST) standards as referenced in the NIST Computer Security Incident Handling Guide, which can be downloaded at https://www.nest.gov/publications/computer-security-incident-handling-guide, and it shall include, at a minimum, breach detection, breach notification, and breach response. Further, Contractor shall notify the impacted Purchasing Entity within 72 hours of learning of such breach.

4. Authentication and Access

4.1 Any network connected Device must offer authentication for all features via LDAP and/or Windows AD, as well as the ability to disable authentication for any or all features.

4.2 Any network connected Device must have the ability to connect via Dynamic Host Configuration Protocol (DHCP) or Static IP address.

4.3 The credential information for any remote authentication method may not be maintained within the Device's memory.

4.4 Access to the Device's administrative functions must be password protected per the Participating State or Entity requirements, and the default settings must be changed at the time of Device installation.

5. Hard Drive Removal and Surrender

5.1 Contractor shall ensure that all hard drive data is cleansed and purged (if capable) from the Device at the end of its Useful Life, or when any hard drive is repossessed by Contractor; or

5.2 At the Participating State or Entity's discretion, Contractor shall remove the hard drive from the applicable Device and provide the Purchasing Entity with custody of the hard drive before the Device is removed from the Purchasing Entity's location, moved to another location, or any other disposition of the Device. The Purchasing Entity shall then be responsible for securely erasing or destroying the hard drive.

5.3 If Contractor takes possession of any Device at a Purchasing Entity's location, then they shall also remove any ink, toner, and associated Supplies (drum, fuser, etc.) and dispose of them in accordance with applicable law, as well as environmental, and health considerations, or as otherwise specified in a Participating Addendum.

5.4 Hard drive sanitation shall be at no expense to the Purchasing Entity, however; Contractor may charge the Purchasing Entity a fee if the Purchasing Entity elects to keep the hard drive in their possession. Contractor must disclose the price for removal and surrender of the hard drive, prior to Order placement.

5.5 If the hard drive is not removable, or the Device does not contain a hard drive, then Contractor must convey this to the Purchasing Entity at the time of Order placement. In the case of a non-removable hard drive, **section IV.I (5.1)** shall apply.

5.6 If Contractor is removing another Manufacturer's Device, they are not permitted to remove the hard drive. Only the Manufacturer or their Authorized Dealer shall remove hard drives in their own Devices. Contractor shall work with the Manufacturer to ensure the requirements pursuant to this section are met.

G. Contractor Notices. Contractor shall notify the Lead State, Participating States, Participating Entities and all Purchasing Entities of any recall notices, warranty replacements, safety notices, or any applicable notice regarding the Products being sold. This notice must be received in writing (via postal mail or email) within thirty (30) calendar days of Contractor learning of such issues.

EXHIBIT B – SAMPLE D&A CERTIFICATE

Certificate of Acceptance

Re: Account Schedule Number ("Contract")
Financial Services Provider: Toshiba America Business Solutions, Inc. ("**FS Provide**r")
Lessee/ Customer: ("Customer")

This Certificate of Acceptance to the lease, loan or other form of financial services contract described above ("**Contract**") is by and between the FS Provider identified above and the Customer identified above.

Customer, through its authorized representative, hereby certifies to FS Provider and any assignee of FS Provider with respect to the Contract that:

1. All of the Equipment has been inspected and is (a) complete, (b) properly installed, (c) fully functioning, and (d) in good working order.

2. Customer is not in default under the Contract and all of Customer's statements and promises set forth in the Contract are true and correct.

IN WITNESS WHEREOF, Customer's duly authorized representatives has executed this Acceptance Certificate as of the Acceptance Date.

Customer:

By: _____

Title:

Acceptance Date:

EXHIBIT C – AUTHORIZED DEALER FORM

Manufacturer Name: _____

(Check one)

☐ The Dealer listed below is authorized to provide Products and Services in accordance with the NASPO ValuePoint Multi-Function Devices and Related Software, Services and Cloud Solutions Master Agreement.

☐ The Dealer listed below will no longer provide Products and Services under the NASPO ValuePoint Multi-Function Devices and Related Software, Services and Cloud Solutions Master Agreement for the following reason (required):

_____

_____

_____

State(s) Serviced by Dealer:	
Dealer Name:	
Address:	
Phone (include Toll-Free, if available):	
Contact Person(s):	
Email Address:	
FEIN:	

Signed: _____ Date: _____
(Contractor Representative)

Signed: _____ Date: _____
(Authorized Dealer Representative)

_____
(Print First and Last Name of Authorized Dealer Representative)

DocuSign Envelope ID: C764E410-020D-4DE5-99C8-4C5B8EF55B29

EXHIBIT D – AUTHORIZED DEALERS BY STATE



Exhibit D -
Authorized Dealers by

DocuSign Envelope ID: C764E410-020D-4DE5-99C8-4C5B8EF55B29

ATTACHMENT 1 – TOSHIBA LEASE AGREEMENT TERMS AND CONDITIONS

AGREEMENT FOR LEASE OF EQUIPMENT
a Contract Between

"Lessee"
(NAME, ADDRESS, PHONE OF LESSEE)
and
Toshiba America Business Solutions, Inc.

WHEREAS, Lessee is authorized to lease under the NASPO-ValuePoint Master Agreement ("Master Agreement") and the State of Participating Addendum thereto; and

WHEREAS, it is deemed that the lease of this equipment is both necessary and for the good of Lessee;

NOW, THEREFORE, in consideration of the aforesaid premises, the parties mutually agree as follows:

1. LEASE TERM. This Agreement shall be effective from the date of delivery and acceptance of Leased Equipment for the term set forth on the (i) Attachment 5, Toshiba Lease Order Form and if applicable Attachment 6, Toshiba Lease Order Form Schedule B (collectively an "Order Form"); or (ii) the Lessee's Purchase Order (PO) to which this Agreement is attached, unless sooner terminated by either party as set forth in Section 6 of this Agreement.

2. DEFINITIONS. "**Lease Term**" means the term of this Agreement as set forth in Section 1. "**Leased Equipment**" means the (i) equipment described in the Order Form, attached to this Agreement, and which is incorporated herein; (ii) any replacement equipment provided by Lessor; and (iii) any additional equipment described under subsequent Order Forms agreed to during the term of this Agreement. "**Lessor**" means Toshiba America Business Solutions, Inc. or, if applicable, its permitted assignee.

3. CONSIDERATION (RENT). The parties agree that for the Lease Term, Lessor leases to Lessee the equipment described in, and for the lease payments set forth in, the Order Form, excluding meter charges, late fees and applicable taxes. Except as provided in section 6(c), lessee's payment obligations are absolute and unconditional and are not subject to cancellation, reduction or setoff for any reason whatsoever. Lessee does not agree to reimburse Lessor for expenses, unless otherwise specified in the incorporated documents. Any intervening end to a fiscal period shall be deemed a contract renewal (not changing the overall Agreement term) or a termination as the results of legislative appropriation may be required.

4. POSSESSION, TITLE AND RETURN.

(a) Lessee shall have possession of the Leased Equipment for the Lease Term, unless this Agreement is earlier terminated in accordance with Section 6 below and shall keep such Leased Equipment at the location specified in the Order Form or such other location as Lessor may agree in writing.

(b) Lessor covenants that it has good title to the Leased Equipment, except any intangible property or associated services such as periodic software licenses and prepaid database subscription rights included in the Leased Equipment, if any. If the Order Form indicates that this lease is a Capital (i.e. $1 Buyout) Lease and if this Agreement is deemed to be a secured transaction, Lessee grants Lessor a first priority security interest in the Leased Equipment to secure all of Lessee's obligations under this Agreement, agrees not to permit any other liens on the Leased Equipment, and shall own such Leased Equipment as of the acceptance date and Lessee authorizes Lessor to record a UCC-1 to reflect such interest. At the end of the Lease Term, if Lessee is not in default, Lessor will release any security interest it may have in the Leased Equipment subject to such Capital Lease, which will be retained by Lessee.

(c) At the expiration of the term of this Agreement and provided that the Order Form does not indicate this lease is a Capital Lease, upon Lessee's written request, Lessor shall remove the hard drive from the applicable Device and provide the Lessee with custody of the hard drive before the Device is removed from the Lessor's location. Lessor may charge the Purchasing Entity a fee if the Purchasing Entity elects to keep the hard drive in their possession. The Lessee shall then be responsible for securely erasing or destroying the hard drive. If Lessee is not in breach of this Agreement, all costs of removing and transporting the Leased Equipment at the expiration of the Lease Term shall be the responsibility of Lessor.

(d) Risk of loss of the Leased Equipment rests with Lessor until the Leased Equipment is picked up from Lessee's designated location, at which time risk of loss passes to Lessee.

(e) If the Order Form indicates this lease is a Fair Market Value Lease, at the end of the Lease Term and upon 30 days' prior written notice to Lessor, Lessee may purchase all, but not less than all, of the Leased Equipment AS-IS and WHERE-IS, WITHOUT ANY WARRANTY AS TO CONDITION, TITLE OR VALUE, for the Fair Market Value, plus applicable sales and other taxes, if any.

5. TAXES. Lessee agrees to pay all fees, assessments, taxes and charges governmentally imposed upon Lessor's purchase, ownership, possession, leasing, renting, operation, control or use of the Leased Equipment.

6. TERMINATION.

(a) Termination by Mutual Consent. Any discretionary or vested right of renewal notwithstanding, this Agreement may be terminated upon written notice by mutual consent of both parties.

(b) Termination by Lessee without Cause. This lease may be bought out and all Leased Equipment returned to Lessor, although fair market value leases, operational leases, non-cancelable rentals and capital leases are subject to a termination charge. The termination charge is equal to the balance of unpaid lease payments and other amounts due hereunder (including any current or past due amounts) for leases and with regard to service or maintenance obligations, may not exceed more than four (4) month service and supply base or 25% of the remaining term, whichever is less.

(c) Termination for Nonappropriation. The continuation of this Agreement beyond the current fiscal period is subject to and contingent upon sufficient funds being appropriated, budgeted, and otherwise made available by Lessee's legislature, governing body and/or federal sources. If for any reason Lessee's funding is not appropriated or is withdrawn, limited, or impaired, Lessee may terminate this Agreement, and Lessor waives any and all claim(s) for damages, effective as of the end of the fiscal period in which written notice of such non-appropriation, withdrawal, limitation or impairment is provided by Lessee to Lessor. If Lessee terminates this Agreement because of non-appropriation, withdrawal, limitation or impairment of funds, Lessee will not purchase, lease or rent replacement equipment performing the same functions as the Leased Equipment during the subsequent fiscal period.

(d) Termination for Default or Breach. A default or breach may be declared with or without termination. This Agreement may be terminated by either party upon written notice to the other party for any material breach or default by the other party of any terms, conditions, covenants, or obligations of this Agreement. Notice of termination for breach or default is effective 30 days following service of notice, or upon any subsequent date specified in the notice of termination. Termination by Lessor due to Lessee's material breach or default will be subject to a termination charge, which is equal to the balance of lease payments and other amounts due hereunder (including any current or past due amounts) for leases and may not exceed more than four (4) month service and supply base or 25% of the remaining term, whichever is less, for service and maintenance charges.

7. INSURANCE. At Lessor's request, Lessee shall provide to Lessor proof that the Leased Equipment is covered for the value thereof against property loss or damage while in Lessee's possession by Lessee's program of self-insurance (if approved by Lessor and Lessor's assignee, if any) or a policy of property insurance from a qualified insurer.

8. LOSS OR DAMAGE. If any item of Leased Equipment is lost, stolen or damaged, Lessee will, at Lessee's option and cost, either: (a) repair the item or replace the item with a comparable item reasonably acceptable to Lessor; or (b) pay Lessor the sum of: (i) all past due and current lease payments and other amounts due under this Agreement; (ii) the present value of all remaining lease payments for the effected item(s) of Leased Equipment, discounted at the rate of 6% per annum; and (iii) if this lease is not a Capital Lease, the Fair Market Value of the effected item(s) of Leased Equipment. Upon Lessee's payment to Lessor under clause (b) above, Lessor will then transfer to Lessee all of Lessor's right, title and interest in the effected item(s) of Leased Product AS-IS AND WHERE-IS, WITHOUT ANY WARRANTY AS TO CONDITION, TITLE OR VALUE. "Fair Market Value" means the item's fair market value at the end of the Lease Term, assuming good order and condition (except for ordinary wear and tear from normal use), as estimated by Lessor. No such loss or damage shall relieve Lessee of payment obligations hereunder.

9. WARRANTY AND MAINTENANCE OF EQUIPMENT; WARRANTY DISCLAIMER. All services performed under this Agreement shall be of workmanlike quality, consistent with the standards of the trade, profession or industry. Lessor shall assign to Lessee all manufacturer's warranties on the Leased Equipment, which shall be not less than a full six months' warranty. Lessor shall be responsible for ongoing service and maintenance of the Leased Equipment for the duration of the Lease Term. EXCEPT AS OTHERWISE STATED HEREIN, LESSOR MAKES NO WARRANTY EXPRESS OR IMPLIED, INCLUDING THAT THE LEASED EQUIPMENT IS FIT FOR A PARTICULAR PURPOSE OR THAT THE LEASED EQUIPMENT IS MERCHANTABLE. Lessee acknowledges that none of Lessor or their representatives are agents of any assignee and none of them are authorized to modify the terms of this lease or on any Schedule. No representation or warranty of Lessor with respect to the Leased Equipment will bind any assignee, nor will any breach thereof relieve Lessee of any of its obligations hereunder. THIS LEASE AGREEMENT AND EACH SCHEDULE CONSTITUTES A "FINANCE LEASE" AS DEFINED IN ARTICLE 2A OF THE UNIFORM COMMERCIAL CODE (the "UCC"). Lessee agree that any manufacturer or Lessor warranty or service agreement is a separate and independent obligation of Lessor to Lessee, that no assignee of the Lessor shall have any obligation to Lessee with respect to such warranty or service agreement and that Lessee's obligations

under this Agreement are not subject to setoff, withholding, reduction, counterclaim or defense for any reason whatsoever including, without limitation, any claim Lessee may have against Supplier.

10. LESSOR REMEDIES. If Lessee default, Lessor may do one or more of the following: (a) recover from Lessee, as liquidated damages for loss of bargain and not as a penalty, the sum of: (i) all past due and current lease payments and other amounts due under this Agreement; (ii) the present value of all remaining lease payments, discounted at the rate of 6% per annum; and (iii)) require Lessee to make the Leased Equipment available to Lessor for pickup at Lessee's premises (and Lessee shall be responsible for removing all data as provided in Section 4) and to pay all costs of removing and transporting the Leased Equipment; (c) charge Lessee for expenses incurred in connection with the enforcement of Lessor's remedies. If Lessor picks up the Leased Equipment, Lessor may sell, release or otherwise dispose of the Leased Equipment and apply the proceeds, less reasonable selling and administrative expenses, to the amounts due by Lessee. These remedies are cumulative, in addition to any other remedies provided by law, and may be exercised concurrently or separately. Any failure or delay by Lessor to exercise any right shall not operate as a waiver of any right. LESSOR SHALL NOT BE LIABLE FOR CONSEQUENTIAL, INDIRECT, INCIDENTAL OR SPECIAL DAMAGES.

11. PROPER AUTHORITY. The parties hereto represent and warrant that the person executing this Agreement on behalf of each party has full power and authority to enter into this Agreement. Any services performed by Lessor before this Agreement is effective or after it ceases to be effective are performed at the sole risk of Lessor.

12. LESSEE REPRESENTATIONS. Lessee represents that: (a) this Agreement and any documents required to be delivered in connection with this Agreement (collectively, the "Documents") have been duly authorized by Lessee in accordance with all applicable laws, rules, ordinances and regulations; (b) the Documents are valid, legal, binding agreements, enforceable in accordance with their terms and the person(s) signing the Documents, if applicable, have the authority to do so, are acting with the full authorization of Lessee's governing body, and hold the offices indicated below their signatures; (c) the Leased Equipment is essential to the immediate performance of a governmental or proprietary function by Lessee within the scope of Lessee's authority and shall be used during the Lease Term only by Lessee to perform such function; (d) Lessee intends to use the Leased Equipment for the entire Lease Term and shall take all necessary action to include in Lessee's annual budget any funds required to fulfill Lessee's obligations each fiscal period during the Lease Term; (e) Lessee has complied fully with all applicable law governing open meetings, public bidding and appropriations, required in connection with this lease and the debt under applicable state law; (f) unless this lease is a Capital Lease, Lessee's obligations to remit Lease Payments constitutes a current expense and not a debt under applicable state law; (g) this Agreement is binding on Lessee and Lessee's successors and assigns; and (h) all financial information Lessee has provided is true and a reasonable representation of Lessee's financial condition.

13. ASSIGNMENT. Lessee may not assign or dispose of any rights or obligations under this Agreement or sublease the Leased Equipment without Lessor's prior written consent. Notwithstanding anything in the NASPO ValuePoint Master Agreement and/or the Participating Addendum to the contrary, Lessor may assign all or any portion of this Agreement or its interest in the Leased Equipment; provided that service obligations on the Leased Equipment shall remain with Toshiba America Business Solutions, Inc. and expressly not with Lessor's assignee and must conform to the terms of the NASPO ValuePoint Master Agreement and the State of Participating Addendum. Lessor's assignee shall have Lessor's rights under this Agreement, but none of Lessor's obligations. Lessee agrees not to assert any claims, defenses or offsets it may have against Lessor against such assignee.

14. AGREEMENT AND MODIFICATION. This Agreement is made pursuant to the NASPO ValuePoint Master Agreement identified above, and the State of Participating Addendum to that Master Agreement, the terms of which are incorporated herein by reference. In the event of conflict between the Master Agreement or the State of Participating Addendum and this Agreement, the Master Agreement and the Participating Addendum shall govern and control. Unless otherwise expressly authorized by the terms of this Agreement, no modification or amendment to this Agreement shall be binding upon the parties, unless the same is in writing and signed by the respective parties hereto.

15. TIME PRICE. If the Toshiba Lease Order Form and Schedule indicates the lease is a Capital Lease, Lessee understands that the Leased Equipment may be purchased for cash (the "Product Cost") or purchased pursuant to this Agreement for an amount of each Lease Payment times the number of Lease Payments, less maintenance, as set forth on the NASPO Lease Order Form and Schedule and this Agreement, plus the $1 Purchase Option amount stated on the NASPO Lease Order Form and Schedule, and by signing this Agreement, Lessee has chosen to purchase the Leased Equipment for that price. The Product Cost may be determined by dividing the Lease Payment by the lease rate factor set forth on the NASPO Lease Order Form and Schedule. Each Lease Payment under a Capital Lease includes a part of Lessor's investment in the Product Cost and a return on Lessor's investment in the Capital Lease. The total return on Lessor's investment (the total finance charge) is determined by deducting the Product Cost (as determined above) from the Time Price. The difference so determined is the return to Lessor on its investment (the total finance charge). The rate of return (finance rate) may be determined by applying to the Product Cost, the rate that will amortize the Product Cost down to the Purchase Option amount by applying as payments, the Lease Payments. For purposes of that amortization, each Lease Payment will be considered received on the date it is required to be paid under this Agreement.

16. GOVERNING LAW, JURY TRIAL WAIVER. This Agreement and the rights and obligations of the parties hereto shall be governed by, and construed according to, the laws of the State of , without giving effect to any principle of conflict of laws that would require the application of the law of any other jurisdiction. BOTH PARTIES AGREE TO WAIVE ALL RIGHTS TO A JURY TRIAL WITH RESPECT TO THIS AGREEMENT AND THE LEASED EQUIPMENT.

17. NOTICE. All notices or other communications required or permitted to be given under this Agreement shall be in writing and shall be deemed to have been duly given if (a) delivered personally in hand, (b) delivered by telephone, facsimile or email with simultaneous regular mail, or (c) mailed certified mail, return receipt requested, postage prepaid on the date posted, and addressed to the other party at the address specified above or such other address as the other party may have provided written notice of in accordance with this Section 17. For purposes of computing times from service of notice, service of notice by delivery in hand shall be effective on the date of delivery; notices that are mailed shall be effective on the third calendar day following the date of mailing.

18. RESERVED.

19. ELECTRONIC DOCUMENTATION. This Agreement may be executed in counterparts and signed by the parties manually or electronically. The executed counterpart that has Lessor's original signature and/or is in Lessor's possession shall constitute chattel paper as that term is defined in the UCC and shall constitute the original agreement for all purposes. If Lessee transmits this Agreement to Lessor by facsimile or other electronic transmission, the transmitted copy shall be binding upon the parties. Neither party may raise as a defense to the enforcement of this Agreement that it was signed or transmitted electronically.

IN WITNESS WHEREOF, the parties hereto have caused this Agreement to be signed and intend to be legally bound thereby.

LESSOR:	**LESSEE:**
Toshiba America Business Solutions, Inc.	
	By: _____
Name:	Name:
Title:	Title:
Date:	Date:

DocuSign Envelope ID: C764E410-020D-4DE5-99C8-4C5B8EF55B29

ATTACHMENT 2 – TOSHIBA SERVICE LEVEL AGREEMENT

TOSHIBA

1. Customer Level SLA

1.1. Purpose

The purpose of this Attachment is to outline service levels; as well as provide Customer with a defined process for equipment replacement or loan as set forth herein.

1.2. Customer Service Level Agreement

Contractor agrees to maintain the following service levels defined below as targets:

Performance Criteria	Target Level
Average Uptime	96% or Better
Average On-Site Response Time	4 Hours or Less

1.3. Total Quality Commitment (TQC)

1.3.1. Free Replacement - If Buyer's Toshiba MFD, Facsimile or its accessories, do not operate within Toshiba's product specifications during the term of its lease or if purchased its maintenance service term, and if the equipment cannot be repaired to perform within product specifications, Contractor will replace the MFD, facsimile or accessory at no charge with a model of equal or better features and specifications.

1.3.2. Free Loaner:

1.3.2.1. If Customer's Toshiba MFD is out-of-service more than two (2) consecutive business days after notifying a Contractor's Authorized Servicing Provider or requires off-site service, a loaner MFD will be provided by the Contractor Authorized Servicing Provider at no additional charge.

1.3.2.2. All loaned equipment is the property of Contractor or the Contractor's Authorized Servicing Provider and must be returned to Contractor or the Contractor's Authorized Servicing Provider at the time the repaired or replaced equipment is tendered.

1.3.3. Term of Program.

The term of this program is (i) for purchased equipment, three years from equipment installation date or maximum number of copies as stated in the product specifications, whichever occurs first; or, (ii) for leased or rented equipment, the length of the original lease or rental term starting from the equipment installation date or the maximum number of copies as stated in the product specifications, whichever occurs first.

1.3.4. Terms & Conditions Of TQC

This program applies only to new Toshiba MFD and/or accessories acquired by customers from Toshiba or an Contractor Authorized Servicing Provider on or after April 1, 1996, on condition that the equipment: (i) was continuously maintained under a full service maintenance agreement provided by an Authorized Toshiba Servicing Provider, and (ii) only genuine Toshiba parts and consumable supplies are used in the maintenance and operation of the equipment. This program is non-transferable. Product damaged or destroyed because of Buyer's negligence, misuse or abuse, improper electrical power, or an act of God are not covered under this program.

If a Contractor Authorized Servicing Provider is not available to fulfill the terms of this program, Toshiba will

DocuSign Envelope ID: C764E410-020D-4DE5-99C8-4C5B8EF55B29

resolve any program issues within a reasonable period of time. No modification or extension of this program is effective unless it is in writing and signed by the Vice President, General Manager of Toshiba-Electronic Imaging Division.

1.3.5. How To Exercise This Guarantee

First, notify your Authorized Toshiba Servicing Provider of the problem. If you do not obtain resolution to your satisfaction via your Authorized Toshiba Servicing Provider, send a certified letter documenting your problem and a copy of the dated sales receipt to:

Toshiba America Business Solutions, Inc.
Director of Field Service
25530 Commercentre Boulevard
Lake Forest, California 92630

ATTACHMENT 3 – TOSHIBA MAINTENANCE AGREEMENT

TOSHIBA	MAINTENANCE AGREEMENT Attachment 3
	Administered by the State of Colorado #RFP-NP-23-001

These maintenance terms are pursuant to a Participating Addendum under NASPO ValuePoint Master Agreement administered by the State of Colorado #RFP-NP-23-001 (the "Master Agreement"). By accepting this Attachment, Customer agrees to purchase the services as set forth in the Maintenance Order Form. Contractor agrees to provide parts, labor, ink, toner, and toner collection containers (the "Maintenance Services") for the equipment listed in Attachment 5, Toshiba Lease Order Form in accordance with the terms and conditions of the Master Agreement and the Maintenance Agreement Terms below.

MAINTENANCE AGREEMENT TERMS

1. **TERM:** Each asset shall be annually renewable on each yearly anniversary date for an additional one (1) year period. Contractor shall notify Customer in writing of any such pending anniversary date no later than ninety (90) days prior to such date, and Customer shall have until thirty (30) days prior to such date to notify Contractor in writing that it wishes to renew the term for an additional year in order for such renewal to take effect.

2. For each piece of equipment under this Maintenance Agreement there will be a Start Date & Start Meter. Service for each piece of equipment will be provided from the Start Date & Start Meter until this Maintenance Agreement is terminated or the equipment is withdrawn from service.

3. **REMOVAL FROM SERVICE.** Customer may withdraw individual equipment by providing thirty (30) day written notice prior to the Renewal Date. Customer is responsible for all remaining Minimum Payments if Customer is in default or if equipment is withdrawn prior to Renewal Date.

4. **INVOICING CHARGES.** Customer will pay the charges set forth in the Toshiba Lease Order Form. The first Minimum Payment is due upon receipt of an invoice. Thereafter, Minimum Payments will be due on the same date each month during the Term of this Maintenance Agreement whether or not Customer receives an invoice. Customer's obligation to pay the Minimum Payment is unconditional and is not subject to any reduction, set-off, defense, or counterclaim for any reason whatsoever. Excess click charges or Overage Charges, as applicable; will be invoiced monthly for the period selected on the Maintenance Order Form.

5. If any part of a payment is not made by the Customer when due, Customer agrees to pay Contractor a Late Charge pursuant to the terms of the Master Agreement.

6. Contractor may estimate the number of clicks used if requested Meter Readings are not received before a new billing period begins. Contractor will adjust the estimated charge for overage clicks upon receipt of actual Meter Readings. Notwithstanding any adjustment, the Customer will never pay less than the Minimum Payment. Customer will provide meter readings via an automated website.

7. **CONSUMABLE SUPPLIES**. All supplies delivered as part of this Maintenance Agreement remain the property of Contractor until and unless they are consumed by the equipment in the performance of this Agreement. Any supplies not consumed as specified and not surrendered to Contractor upon expiration or termination of the Maintenance Services for an asset will be invoiced to the Customer at Contractor's then current Master Agreement prices. Customer agrees to provide insurance coverage for supplies in case of loss under any circumstances. Notwithstanding the foregoing, the risk of loss of the consumable supplies shall be transferred from Contractor to Customer if such consumable supplies are stored at Customer's facility.

8. **TAXES**. Unless Tax Exempt (as evidenced by certificate or in the case of exempt sales to federal, state, and local government entities a seller may also document the exemption by retaining a copy of a government issued purchase order, government check or voucher in place of the exemption certificate). In addition to the charges due under this

Maintenance Agreement, the Customer agrees to pay amounts equal to any taxes resulting from this Maintenance Agreement, or any activities hereunder, exclusive of taxes based upon net income.

9. **INSTALLATION AND ACCESS TO EQUIPMENT.** Customer agrees to provide adequate space, environment and appropriated electrical requirements including, if required, a dedicated 120 volt or 220 volt electrical line, as published in the Operator and Service Manuals for the operation and maintenance of the equipment. If Contractor has installed a power filter/surge protector on the equipment, it must at all times remain continuously installed. If it is removed Customer agrees to purchase a replacement from Contractor immediately. Contractor shall have full and free access to the equipment to provide service thereon.

10. If persons other than Contractor representatives install conversions, feature additions, accessories or perform service on equipment and as a result further repair by Contractor is required, such repairs shall be made at Contractor's applicable Time and Material rates and terms then in effect, per the Master Agreement pricing. If such additional repair is required, Contractor may immediately withdraw the equipment from this Maintenance Agreement.

11. **KEY OPERATOR - END-USER TRAINING.** Customer agrees to designate a Key Operator for training on the use, supplications and features of the equipment. The Key Operator will be responsible for normal Key Operator activities as detailed in the Operations Manual and for training additional end-user. If the Key Operator assignment changes, Customer agrees to designate a new Key Operator immediately. Contractor agrees to provide training for the designated Key Operator and to provide initial training for end-users on the use, applications and features of the equipment. Additional training requested by Customer will be at Contractor Master Agreement hourly rates.

12. **EXCLUSIONS.** Service under this Maintenance Agreement does not include:
    - **a.** Furnishing paper, staples (unless purchased by the Customer), replacement print heads, batteries, ribbons, media, periodic maintenance on thermal printers or any of the following:
    - **b.** Service of equipment if moved outside of Contractor's designated service area;
    - **c.** Repair of damage or increase in service time caused by accident, misuse, negligence, abuse or disaster;
    - **d.** Service of accessories, attachments or click control devices other than those of the same manufacturer as the equipment;
    - **e.** Painting or refinishing of the equipment;
    - **f.** Making specification changes;
    - **g.** Performing key operator functions as described in the operator manual;
    - **h.** Moving equipment, repair of damage or increase in service time caused by the use of the equipment for other than the ordinary use for which designed;
    - **i.** Repair of damage caused by electrical surges or lightning strikes, if equipment is connected to a Contractor supplied power filter/surge protector repairs will be included;
    - **j.** Repair of damage or increase in service time caused by failure to continually provide a suitable installation environment as defined by the manufacturer, with all the facilities prescribed by Contractor including, but not limited to, adequate space, electrical power, air conditioning or humidity control
    - **k.** Repair of equipment that has been designated as obsolete by the manufacturer and genuine OEM parts are no longer available.
    - **l.** Repair of damage or increase of service time caused by Customer's use of media outside the specifications as described in the operator manual.

13. This Maintenance Agreement is not assignable, its right, duties and obligations may not be assigned or transferred by the Customer without the prior written consent of Contractor. Any attempt to assign or transfer any of the rights, duties or obligations of this Maintenance Agreement without such consent is void. Contractor's service provided outside the scope of this Maintenance Agreement will be furnished at Contractor's applicable time and material rates and terms then in effect. Contractor is not responsible for failure to render service due to causes beyond its control.

DocuSign Envelope ID: C764E410-020D-4DE5-99C8-4C5B8EF55B29

ATTACHMENT 4 – TOSHIBA $1 BUYOUT LEASE ADDENDUM

Addendum to Agreement number between , as Lessor and , as Lessee

Provided the lease has not terminated early, Lessee shall have the following option at the end of the original term.

Buy: Purchase the equipment for $1.00.

OR

Return: Return the equipment per the lease agreement.

LESSOR	LESSEE
Signature	Signature
Title	Title
Date	Date

NOTE: SIGNATURE MUST BE SAME AS ON LEASE

ATTACHMENT 5 – TOSHIBA LEASE ORDER FORM

LESSEE - BILLING CONTACT INFORMATION (Separate Order Form must be completed for each billing locations.)			
Lessee Legal Name:	Department Name:		FEIN#
Street Address I P.O. Box:			Bldg/Room/Suite:
City:	State:	Zip	Billing Contact Name:
Bill-To Phone Number:	Email:		Fax Number:

LESSEE INSTALLATION LOCATION			
Lessee Legal Name:			Department Name:
Street Address I P.O. Box:			Bldg/Room/Suite:
City:	State:	Zip:	Contact Name:
Phone Number:	Email:		Fax Number:

EQUIPMENT LEASE WITH SEPARATE MAINTENANCE PLAN

	EQUIPMENT LEASE TYPE	LEASE TERM
	☐ Fair Market Value ☐ Capital Lease ☐ Straight Lease	☐ 24 Mo ☐ 36 Mo ☐ 48 Mo ☐ 60 Mo

ITEM DESCRIPTION (If insufficient space, use Schedule A to this Lease Order form and enter below "See Order Form Schedule")	EQUIPMENT LEASE		MAINTENANCE & SERVICES (M&S) PLAN ☐ Include Staples						
	EQUIPMENT LEASE % or RATE- FOR $OUT LEASES ONLY	EQUIPMENT LEASE PAYMENT	ZERO BASE B&W CPC	ZERO BASE COLOR CPC	MAINT. OPTION NUMBER 1, 2, 3	MONTHLY VOLLUME (BW)	MONTHLY BASE CHARGE (BW)	BW OVERAGE RATE	COLOR OVERAGE RATE
		$					$		
		$					$		
		$					$		
		$					$		
		$					$		
		$					$		
		$					$		
		$					$		
		$					$		

Sum of Monthly Equipment Lease Payments: $_____ **Sum of Monthly Base Charges:** $

TOTAL MONTHLY PAYMENT: Equipment Lease Payment + Monthly Base Charge (If Applicable) $_____ **Personal Property Tax Required** ☐

NASPO ADMIN FEE RATE: 0.25% **STATE ADMIN FEE RATE (If Applicable):**

Special Instructions/Additional Information (e.g. equipment models upgraded; Buyout details; etc.):

TERM & PAYMENT SCHEDULE (All Payments are exclusive of sales and use tax)

Sales/Use Tax Exempt ☐ Yes ☐ No **Tax-Exempt No.** **[Attach Tax Exemption]** **PO Issued ☐ yes ☐ No** **PO #**

Payment Cycle: **Monthly Billing** ***Document Fee*: $75.00 included in the 1st invoice**

THIS ORDER FORM INCORPORATES ALL OF THE TERMS AND CONDITIONS OF THE LEASE AGREEMENT

	LESSOR: Toshiba America Business Solutions, Inc. **SIGNATURE:**	**Title:**	**Date:**
	LESSEE: **SIGNATURE**	**Title:**	**Date:**

ATTACHMENT 6 – TOSHIBA LEASE ORDER FORM SCHEDULE

LESSEE _____

Schedule B to NASPO Lease Order Form - EQUIPMENT LEASE WITH SEPARATE MAINTENANCE PLAN

v011119

This Schedule is solely for use with NASPO ValuPoint Participating Addendum only and should accompany the Lease Order Form
For Use with Colorado #RFP-NP-18-01 only

☐ INCLUDE STAPLES:

												MAINTENANCE PLAN				
DEPT. NAME	DIV NAME / CODE	STREET ADDRESS	FLOOR	ROOM / SUITE	CITY	ST	ZIP	PO #	TOSHIBA MODEL	CONFIGURATION SUMMARY / ITEM DESCRIPTION	EQUIPMENT LEASE PAYMENT (with PPT)	No Base Plan, Only CPC for Usage	MAINT. OPTION 1, 2 OR 3	INCLUDED BASE NUMBER OF COPIES	MAINT. MONTHLY BASE CHARGE	B&W OVERAGE RATE	COLOR OVERAGE RATE
EXAMPLE	*10001*	*123 East Main Street*	*2nd Floor*	*201*	*Arlington*	*TX*	*76210*		*Toshiba e-Studio 6560C*	*A4 COLOR/B&W System*	*$ 284.56*	*n/a*	*2*	*25,000*	*$ 137.50*	*$0.0055*	*$0.0300*
														0			
														0			
														0			
														0			
														0			
														0			
														0			
														0			
														0			
														0			
														0			
														0			
														0			
														0			
														0			
														0			
														0			
														0			
														0			
														0			
														0			
										Total Monthly Equipment Lease Payment:	$ -			Tot. Mo Base Chrg:	$ -		

TOTAL MONTHLY PAYMENT (Total Monthly Equipment Lease Payment + Total Mo Base Charge:	$0.00

This Schedule to the NASPO Lease for Equipment and Maintenance Order Form incorporates all of the Terms and Conditions of the Lease Agreement.
Capitalized terms not defined herein shall have the same meaning as defined in the PA and/or the Agreement for Lease of Equipment.

LESSEE	LESSOR: Toshiba America Business Solutions, Inc.
By: _____	By: _____
Name: _____ (Please Print)	Name: _____ (Please Print)
Title: _____	Title: _____
Date: _____ (date of signature)	Date: _____ (date of signature)

ATTACHMENT 7 – TOSHIBA AMENDMENT TO OPT OUT

This Amendment amends that certain Lease Agreement for use with the Participating Addendum between Toshiba America Business Solutions, Inc. and (the "PA") under NASPO ValuePoint Master Terms and Conditions for Multi-Function Devices and Related Software, Services, and Cloud Solutions with Colorado as Lead State #RFP-NP-23-001 (the "Master Agreement"), dated as of , 20 . All capitalized terms used in this Amendment which are not otherwise defined herein shall have the meanings given to such terms in the Master Lease or PA.

WHEREAS, Lessee and Lessor executed that certain the Lease Agreement, which provides for non-appropriation of funds in Section 6(c) thereof,

WHEREAS, Lessee is not a state or local governmental entity;

NOW THEREFORE, the parties agree that the Lease Agreement is amended as follows:

(1) Section 6 (c) is deleted in its entirety and Section 6 (d) is renumbered "Section 6 (c)".

(2) The following is added as Section 6 (d):

"(d) Upon acceptance, subject to the foregoing termination provisions, your obligations under the Lease Agreement will become absolute and unconditional, and are not subject to cancellation, reduction or setoff for any reason whatsoever."

Except as specifically amended herein, all other provisions of the Lease Agreement shall remain in full force and effect.

IN WITNESS WHEREOF, the parties have caused this Amendment to be executed by their duly authorized representatives as of the date of the Lease Agreement.

TOSHIBA FINANCIAL SERVICES, Lessor	**, Lessee**
By:	By:
Name:	Name:
Title:	Title:

ATTACHMENT 8 – TOSHIBA OPINION OF COUNSEL

(LETTERHEAD OF LESSEE'S / CUSTOMER'S COUNSEL)

(Date)

RE: (the "**Lease / Agreement**") dated , 20 between ("**Lessee / Customer**") and , its successors and assigns ("**Lessor / Owner**")

Gentlemen and Ladies:

I have acted as counsel to Lessee / Customer in connection with the execution and delivery of the Lease / Agreement by Lessee / Customer and, in this capacity, I have reviewed a duplicate original or certified copy of the Lease / Agreement and such other documents and instruments as I have deemed necessary or appropriate. As counsel for Lessee / Customer, I have made such factual inquiries, and have examined or caused to be examined such questions of law as I have considered necessary or appropriate for the purposes of this opinion. Based on such inquiries, examination and review, I am of the opinion that:

(a) Lessee / Customer is the entity indicated on the face of the Lease / Agreement and is a political subdivision of the state in which it is located. Lessee / Customer is duly organized and existing under the Constitution and laws of said state and is authorized to enter into and to carry out its obligations under the Lease / Agreement.
(b) The Lease / Agreement has been duly authorized, executed and delivered by Lessee / Customer in accordance with all applicable laws, rules and regulations. The Lease / Agreement is a valid, legal, binding agreement, enforceable in accordance with its terms, except as limited by laws of general application affecting the enforcement of creditors' rights. The person signing the Lease / Agreement (1) has the authority to do so, (2) is acting with the full authorization of Lessee's / Customer's governing body, and (3) holds the office indicated below their signature. The signature of the person signing the Lease / Agreement is genuine.
(c) The Lease / Agreement does not constitute a debt of the Lessee / Customer under applicable state law or a pledge of the tax or general revenues of the Lessee / Customer.
(d) Lessee / Customer has complied fully with all applicable law governing open meetings, public bidding and appropriations required in connection with the Lease / Agreement and the acquisition of the Equipment.
(e) The execution of the Lease / Agreement and the appropriation of funds to meet its obligations thereunder do not result in the violation of any constitutional, statutory or other limitation relating to the manner, form or amount of indebtedness which may be incurred by Lessee / Customer.

[LESSEE / CUSTOMER COUNSEL]

By: _____

DocuSign Envelope ID: C764E410-020D-4DE5-99C8-4C5B8EF55B29

TOSHIBA

NASPO MAINTENANCE & SERVICES ACTIVATION SCHEDULE

CUSTOMER INFORMATION

Customer Purchase Order Number	Date	FSM Number (Internal)	NASPO Customer No.

Maintenance Agreement Term	Agreement Term
2 year ☐ 3 year ☐ 4 year ☐ 5 year. ☐	Start Date End Date

BILL TO INFORMATION

Customer Name Department		
Street		
City	State	Zip Code
Contact Name	Fax Number	
Telephone Number	Fax Number	

EQUIPMENT LOCATION

Customer Name Department		
Street		
City	State	Zip Code
Contact	Fax Number	
Telephone Number	Fax Number	

BILLING INFORMATION

Billing Cycle	Billing Performed by
☐ Monthly ☐ Other	☐ **Toshiba bills the customer;** ☐ **Other**
Billing Format	
☐ Per Machine ☐ Consolidated Bill (Grouped by ☐ De-Centralized Billing (**Each billing entity must sign separate Maintenance**	
Additions will be: ☐ Coterminous ☐ Other	Tax Exempt *(if multiple locations, indicate on P.O. for each state)* ☐ No ☐ Yes If YES, Certificate Number:
Meter Read **Submitted By Customer**: E:bridge ☐ FMAudit ☐ E:meters online (Web) ☐	Customer P.O. Required? (If Yes, Attach Purchase Order) No ☐ Yes ☐ PO Number
Special Instructions:	

CUSTOMER SIGNATURE

Signature on this page indicates acceptance of the Maintenance Plan set forth on Page 2 of this Order and all terms and conditions as stated in the NASPO Master Contract and State Participating Addendum.

Name		**Title**	
Signature		**Date**	

Maintenance & Services Activation Schedule for Purchased Equipment v011119 Document A06

DocuSign Envelope ID: C764E410-020D-4DE5-99C8-4C5B8EF55B29

NASPO-Toshiba Document #A06

NASPO MAINTENANCE & SERVICES ACTIVATION SCHEDULE – Page 2

ZERO BASE PLAN or
OPTIONAL MONTHLY BASE CHARGE WITH OVERAGES PLAN

Staples Included
☐ Yes ☐ No

		Option 1				Option 2				Option 3			
		Monthly Volume	Monthly Base Charge	Overage Rate		Monthly Volume	Monthly Base Charge	Overage Rate		Monthly Volume	Monthly Base Charge	Overage Rate	
Model	Zero Base M&S Rate	B&W	B&W	Color	B&W	B&W	B&W	Color	B&W	B&W	B&W	Color	B&W

CUSTOMER SIGNATURE:

Name		**Title**	
Signature		**Date**	

ATTACHMENT 10 – TOSHIBA SAMPLE MPS STATEMENT OF WORK

Toshiba will provide to Customer throughout the United States, the Services outlined in this Statement of Work during the Initial Term and Renewal Terms. This SOW sets forth the scope of managed print services, requirements and obligations of the parties and is subject to the terms and conditions of a Managed Print Services Agreement ("Agreement") by and between Customer and Toshiba America Business Solutions, Inc. ("Toshiba"), and will be incorporated therein by reference.

1. Assessment Phase

1.1. Initial Assessment and Design

1.1.1. Toshiba's responsibilities are to:

1.1.1.1. Work with Customer to determine the scope and discovery to include sites and device types

1.1.1.2. Develop a schedule for discovery and design

1.1.1.3. Work with Customer to ascertain any security and safety requirements

1.1.1.4. Work with Customer to obtain necessary badging requirements

1.1.1.5. Use Toshiba meter collection software, a network discovery tool, when necessary to facilitate and augment the discovery process

1.1.1.6. Identify and confirm equipment

1.1.2. Customers responsibilities are to:

1.1.2.1. Provide a local onsite customer liaison to work with Toshiba at each site to assist with prioritization, coordination and communication of discovery

1.1.2.2. Provide the computer hardware necessary to operate the software

1.1.2.3. Provide the IP address, queue names, and any other network address required to perform Services

1.1.2.4. SNMP enable the networked equipment

1.1.2.5. Provide a specific list and location (name, address, building, floor, city, state, zip code, serial number, model number) for all meterable equipment

1.1.2.6. Provide any necessary access to floorplans and business areas

1.1.2.7. Provide and be responsible for all such telephone and modem lines, telephones, computers and peripheral devices, computer connections, and network access, as may be necessary for Toshiba to provide Services and to interconnect with Toshiba's network discovery and meter submission tool;

1.1.2.8. Provide Toshiba with current-state print device information to include: print queue names, device configuration, custom form, and IP addresses or host names for devices accepting print jobs from host or mainframe applications. Customer shall have the flexibility to direct output.

1.1.3. Following discovery and design, Toshiba and Customer will mutually agree by location upon

1.1.3.1. The number and models of devices within the scope of Services

1.1.3.2. Fleet configuration, optimal mix, and future-state design including the placement of new Product and retention of Existing Equipment

2. Implementation Phase

2.1. Toshiba and Customer shall:

2.1.1. Toshiba's responsibilities consist of:

2.1.1.1. Maintain an Asset List of all Meterable equipment

2.1.1.2. Coordinate with Customer any network and phone installations needed to support new devices

2.1.1.3. Create and distribute Toshiba asset tags for all equipment having the following necessary information to facilitate a Help Desk calls for networked equipment and supply provisioning for equipment:

- Toshiba's Supplies Ordering Web Portal URL
- Serial Number or Asset Tag
- Toll Free Phone Number or Web URL for Service Dispatch

2.2. Customer's responsibilities consist of:

- Affix asset tags to all equipment and remove any previous service provider asset tags

- Provide and be responsible for all such telephone and modem lines, telephones, computers and peripheral devices, computer connections, and network access, as may be necessary for Toshiba to provide Services and to interconnect with Toshiba's network discovery and meter submission tool

3. Training

3.1. Customer may engage Toshiba to provide a customized training program by working with Toshiba to develop a Training Plan and order such plan via an MPSA Order Form and Training Plan Schedule.

4. Fleet Management.

Within ninety (90) calendar days following the Effective Date, Toshiba shall develop and thereafter maintain a comprehensive inventory of all Equipment that is discovered through Toshiba's electronic discovery tool: (a) equipment and network connections and infrastructure used by Toshiba to provide the services; (b) equipment, software and network connections and infrastructure used by Customer in connection with the Services. Toshiba shall provide an electronic copy of such inventory to Customer upon request.

5. Services & Help Desk

5.1. In general, Toshiba is responsible for providing Services for Customer's networked Equipment identified through Toshiba's remote electronic discovery tool.

5.2. Toshiba's responsibilities include:

- To troubleshoot for the repair of the equipment and to attempt a phone resolution if one is available
- To provide on-site break fix services for technical hardware issues that cannot be resolved remotely
- Toshiba will provide all the support and materials necessary to maintain covered Existing Equipment in operating condition
- To bear financial responsibility for all time, material, and travel associated with break / fix activities
- Next business day break-fix service: Toshiba shall provide response times for new Toshiba Product within 4-8 hours, and shall average an on-site response to a service call within four (4) business hours. For other non-Toshiba new Product, Toshiba shall provide a next business day response time. Customer shall assure that Toshiba's Servicing Providers have reasonable access to Product. If Product cannot be repaired within two (2) business days, a loaner machine with a model of equal or better features and specifications will be provided.
- To restore malfunctioning equipment to good working order during the Service Hours of 8:00 am to 5:00 pm, Monday through Friday - Holidays Excluded
- To provide toner required for the normal operation of equipment
- To meet reasonable security requirements identified by Customer
- To provide a status upon call completion to the on-site service requestor (End-User or representative of End User) prior to leaving the Customer's site

5.3. Toshiba is not responsible for:

- Adjustments, repairs or replacements made necessary resulting from non-Toshiba Third Parties performing any maintenance, repair or replacement
- Failures or damage resulting from accident, neglect, misuse, failure or inadequacy of electrical power or air conditioning or humidity control, or any causes other than ordinary use of the equipment
- Damage to equipment that is placed in an area that does not conform to manufacturer's electrical and environmental requirements
- Failure due to improper telephone or electrical power Acts of God, lightning or other incidents of excess voltage or power surges
- Repairs necessary when Customer modifies, relocates, damages (including without limitation, unavoidable accidents) abuses or misuses the equipment (including without limitation, the spilling of toner or other substance in the machine) and the breakage of lids, hinges, cassettes, etc.
- Repairs necessary when equipment is altered, tampered, or interconnected with non-compatible Equipment
- Repairs relative to connectivity to the device
- Providing cabling required to connect the printer to the network

- Installing any customer-replaceable consumables including but not limited to paper and toner

5.4. Customer's responsibilities are:

- To provide reasonable access to the equipment
- To provide reasonable notice prior to Toshiba if a service request is cancelled
- To notify Toshiba of any required security requirements as required by Customer
- Support the diagnosis of malfunctioning devices by engaging by phone and/or in person with Toshiba technical support personnel as needed

6. Help Desk

6.1. Help Desk Services are those services required to coordinate and respond to problems and service requests made by Customer in the United States. Toshiba shall be responsible for providing, direct or indirect Help Desk access with begin-to-end logging, tracking, resolution and reporting of service calls.

6.2. Toshiba's will perform the following:

- Toshiba will provide Help Desk support for equipment
- To provide on-line and toll-free dispatch services to Customer
- To provide access to Toshiba's portal for the purpose of placing service calls
- To provide an estimated time of arrival for all service calls

6.3. Customers' Responsibilities are:

- To make all service calls through Toshiba's GSP or toll-free phone number
- To convey the end user name and location
- To convey the model type and serial number
- To convey the nature of the service call whether it is a problem or failure
- To promptly return any calls that Help Desk was unable to reach live

7. Vendor Managed Supplies

7.1. Toshiba responsibilities are to:

- Fulfill all orders for supply replenishment under the Billing Program F.O.B. destination
- Fulfill supply orders within three-days of order
- Provide access to the Toshiba GSP, with a single sign-on, for the purpose of ordering all supplies

7.2. Customer responsibilities consist of:

- Provide secure and environmentally appropriate storage for all supplies
- Customer will order supplies as required through Toshiba's GSP and will instruct Customer employees to order such supplies through Toshiba's GSP
- Installation of toner and other customer installable consumables
- Ensuring that all supplies ordered on behalf of Customer are protected against theft or misuse

8. Parts

Part(s) used in the repair of equipment will be new or refurbished, equivalent or better-than-new in functionality and are not necessarily brand name specific. Replaced parts become the property of Toshiba.

9. Additional Activities

9.1. Toshiba is not obligated, but may at its discretion and Customer's approval perform the following services and charge the Customer a time and material rate of **$150 an hour** for services associated with the following:

- Adjustments, repairs or replacements made necessary resulting from non-Toshiba Third Parties performing any maintenance, repair or replacement;
- Failures or damage resulting from accident, neglect, misuse, failure or inadequacy of electrical power or air conditioning or humidity control, or any causes other than ordinary use of the equipment;
- Damage to equipment that is placed in an area that does not conform to manufacturer's electrical and environmental requirements;

- Failure due to improper telephone or electrical power Acts of God, lightning or other incidents of excess voltage or power surges;
- Repairs necessary when Customer modifies, relocates, damages (including without limitation, unavoidable accidents), abuses or misuses the Equipment (including without limitation, the spilling of toner or other substance in the machine), and the breakage of lids, hinges, cassettes, etc.,
- Repairs necessary when Equipment is altered, tampered, or interconnected with non-compatible Equipment.

9.2. Outside of the Service Hours. After-hour services, weekend and Holidays are considered out-of-scope activities that do not fall within the Service Hours. Toshiba, at its discretion with Customer's consent and direction, may provide the out-of-scope services, provided that proper authorization is received from Customer. These services will be billed separately to Customer and the amounts so billed will be payable to Toshiba according to the then current NASPO ValuePoint Master Agreement pricing.

9.3. Network/Software/Other/Supply Replacement. Requests for the following types of services are out-of-scope and may be performed at Toshiba's discretion with Customer's consent, direction and proper authorization. In the event Toshiba is willing to perform the tasks, Customer shall be billed in addition to time spent and distance traveled fees for: (a) Driver support for single or individual user software applications (Toshiba will provide installation support for two workstations upon new equipment delivery), (b) Service requested to replace consumable items such as but not limited to printer supplies (paper, ink cartridges and toner), power strips, and batteries.

10. Asset Management.

Within ninety (90) calendar days following the Effective Date, Toshiba shall develop and thereafter maintain a comprehensive inventory of all Equipment that is discovered through Toshiba's electronic discovery tool: (a) equipment and network connections and infrastructure used by Toshiba to provide the services; (b) equipment, software and network connections and infrastructure used by Customer in connection with the Services. Toshiba shall provide an electronic copy of such inventory to Customer upon request.

ATTACHMENT 11 – TOSHIBA ASSET RELOCATION REQUEST FORM

DATE OF REQUEST:

CUSTOMER INFORMATION

Purchase Order Number (if required)	Date of Installation	Contract Number	Member #

Request for:

Relocation - One (1) free relocation move per asset per year. If move requires trained personnel, move must be supervised. Note for the 2nd move, the installation, de-installation, freight and other additional fees may apply to the total cost of the equipment move. Dealer will provide a quote to member and will bill direct at the agreed upon rate.

Return of Leased Asset (no cost)

Please allow 15-30 days for return processing

BILL TO INFORMATION

Customer Name		
Street		
City	State	Zip Code
Contact Name	Contact Title	
Telephone Number	Fax Number	

CURRENT EQUIPMENT LOCATION			**NEW EQUIPMENT LOCATION**		
Customer Name	Department	Floor/Room/Suite	Customer Name	Department	Floor/Room/Suite
Street			Street		
City	State	Zip Code	City	State	Zip Code
Contact Name	Contact Title		Contact Name	Contact Title	
Telephone Number	Fax Number		Telephone Number	Fax Number	
Model Number:	Serial Number:		Model Number:	Serial Number:	
Meter Read	Pickup Date:		Meter Read	Delivery Date:	

Name:	Title:	Date:
Signature:		
Special Instructions/Removal Instructions		

Customer must sign this form indicating consent to move or remove equipment. Send this form to Operations via **REQUESTOR AUTHORIZATION**

FAX or EMAIL:

Operations Fax: 800.999.0057
Operations Email: naspo.orders@tabs.toshiba.com

DocuSign Envelope ID: C764E410-020D-4DE5-99C8-4C5B8EF55B29

ATTACHMENT 12 – TOSHIBA FLEET MONITORING TOOL SITE SURVEY

The information in this survey allows Toshiba to provide the highest level of quality service. By filling out this survey, you authorize Toshiba FMAudit Support to contact the individuals for implementation and account management purposes.

Part I: Dealer Contact Information

1. Primary Contact Information	
Contact Name:	
Job Title:	
Job Function:	
Tel:	
Email:	

Part II: End-User Organizational Information

1. Company Information	
*Company Name:	**NASPO ValuePoint**
Company Address:	
2. Primary Contact Information	
Contact Name:	
Job Title:	
Job Function:	
Tel:	
Email:	
3. IT Administration	
Same as Primary:	
Contact Name:	
Job Title:	
Job Function:	
Tel:	
Email:	

***Note: Please do not change the Company Name. It must state, "NASPO Valuepoint."**

Part III: Hosting System

a.	What operating system will FMAudit Onsite be run on?	
b.	Is this operating system installed using 32 or 64 bit?	
c.	Does the server/workstation meet the following minimum hardware requirements? • 2.4 GHz processor • 1 GB memory • 1 GB free disk space	
d.	Does the server/workstation meet the following minimum software requirements? • One of the following Microsoft operating systems: I. Windows XP II. Microsoft Windows 2003 III. Microsoft Vista/7/8 • Internet Explorer 7.0 • Windows .NET 2.0 Framework with SP2	

Part IV: Network Infrastructure

a.	Is SNMP traffic (port 161) blocked or restricted on the network?	
b.	What SNMP community name is used for communication with printer related devices? *(i.e. PUBLIC)*	
c.	Are all printers on the WAN accessible from the server/workstation where Onsite will be installed?	

Part V: Proxy / Firewall Restrictions

Answer the following questions if a proxy and/or firewall are present.		
a.	Is there a domain authenticated proxy?	
b.	Is there an IE passport authenticated proxy?	
c.	Will port 80 (HTTP) allow outgoing printer related data to be transferred from the Onsite application back to the Central application located within another facility?	
d.	Will port 443 (SSL / HTTPS) allow license related data to be exchanged between the Onsite application and the FMAudit license server?	
e.	Is there a firewall or router that will block outgoing XML (SOAP) traffic? *(Note: some older Cisco products detect the XML data exchange format as invalid HTTP traffic)*	

Part VI: Network Connected Printer Infrastructure

a.	Approximately how many network connected printers will be monitored?	
b.	Are any printers connected via Jet Direct or compatible devices?	
c.	Is there a workstation firewall installed; if so what product and version? *(i.e. Windows XP sp2 firewall)*	
d.	Is the Windows SNMP Provider service installed?	

Part VII: Items to Prepare

a.	Please attach a list of subnets where printer related products will be discovered. *(i.e. 10.0.1.1-254, 10.0.1-254.1-254)*
b.	Please attach a list of networked printer names that will be monitored. These will be cross referenced with known supported device lists to flag any potential issues. *(i.e. HP LaserJet 2300)*

DocuSign Envelope ID: C764E410-020D-4DE5-99C8-4C5B8EF55B29

ATTACHMENT 13 – TOSHIBA EMETERS ONLINE INFORMATION AND INSTRUCTIONS

Meter reads can be submitted through Toshiba's E-Meters Online (Online Web E-Meter Submission) system using the Internet. Through E-Meter, you can submit your current meter reads for all equipment on a spreadsheet that can be exported on the site and then MASS upload the reads for all devices. Or you can directly enter each meter read per device on the web page.

When are meters due?

The eMeter Online website opens on the 26th of the prior month. Please submit your current meter reads from this date through the 8th of the current month.

If the dates are missed above, you can go to the 'Submitted Meter Read' tab and edit the estimated meter read that processes around the 9th of each month. Meter Reads can be changed from the 9th through the 14th. Billing occurs on the 15th therefore, the website is closed. The site does not open again until the 26th of the month.



To enter a meter read, please follow the steps listed below. **eMeters On line**

Submission Instructions

1. Log onto FYI
2. Go to: Programs and click on Meters Online
3. Search by 'ALL' or Customer Name.
4. Enter the meter read by device.
5. Or export the upload spreadsheet, enter the meter reads, then save the document.
6. The on the website click on the upload spreadsheet, retrieve your data and hit submit. All reads should automatically update. If any fallout, a message will be displayed.



Should you have any questions on submitting your meters on line please either email tabs.fsm@tabs.toshiba.com or call (800) 866-4361, select option 1.

ATTACHMENT 14 – TOSHIBA STATEMENT OF SERVICES

Client	Contractor
<enter Client Principal Contact Name> **Printed Name**	<enter Authorized Contractor name> **Printed Name**
<enter Client Principal Title> **Printed Title**	<enter Authorized Contractor Title > **Printed Title**
Signature (Authorized Client)	**Signature (Authorized Contractor)**
<enter Client SOS Signing Date> **Date**	<enter Authorized Contractor SOS Signing Date> **Date**

This Statement of Services ("SOS") is made by and between Toshiba America Business Solutions, Inc. ("TABS"), including its division Toshiba Business Solutions ("TBS"), with its headquarters located at 25530 Commercentre Drive, Lake Forest, CA 92630 (collectively or individually TABS and TBS shall be referred to as the "Contractor"), and <enter Client Legal Name> located at <enter Client Location> (the "Client").
This SOS describes the project and details the services and deliverables (hereinafter collectively known as "Project Services") associated with the <enter Solution Name> project (the "Project").
Project Services shall be provided pursuant to the "Project Contract" which consists of (i) this SOS together with (ii) the Master Software and Services Agreement ("MSSA") <enter Specific MSSA Name> between Contractor and its Client (the "Services Agreement"). This SOS is subject and subordinate to the MSSA. To the extent the terms and conditions of the Services Agreement and SOS conflict, the SOS shall prevail.

1. Project Contacts

Contractor Office Details	
Contractor Region	
Address Line1	
Address Line 2	
City, State, ZIP City, State. ZIP	
Phone Number	
Fax Number	
Contractor Sales Rep. Name	
Contractor Consultant Name	
Contractor Analyst Name	
Client Number	
Contract Number	

Client Details			
Client Name			
Client Contact Person			
Client Address Line-1			
Client Address Line-2			
City, State, ZIP			
Telephone #:		Ext:	
Fax Number:			
Email Address:			
Client Number:			
Contract Number:			

2. Introduction

Client's acceptance of this SOS shall be authorization for Contractor's performance of the Project Services set forth in this SOS. Contractor reserves the right to utilize subContractors and sub-subContractors (collectively known as "Sub-Contractors") in performance of the Project Services. Contractor represents that all its Sub-Contractors (i) will be competent to perform the Project Services; (ii) will exercise commercially reasonable standards in performing these Project Services; and (iii) will comply with all terms and conditions applicable to Contractor in the performance of the Project Services.

The purposes of the SOS are to (i) specify the work to be completed by the Contractor during phases of the Project; (ii) detail the obligations of the Contractor and the Client; and (iii) set forth the Project schedule and fees.

Contractor has prepared this SOS to detail the scope of Project Services and costs for the Project Services. The costs stated were derived by drawing from Contractor's experience with similar engagements and using preliminary information received from Client.

3. Project Objective

Based on the agreed upon business requirements, Contractor will provide design, implementation, training, and support services to the following locations:

<enter "SaaS" if Cloud Hosted or enter the Client's physical Address Location for On-Premises hosted solutions>

4. SOS Addendums

The SOS Addenda are supplementary documents that detail the specific deliverables and responsibilities by party. The relevant addendum is predicated upon whether your solution is a cloud solution, non-cloud solution, or mix of both. The SOS Addenda describe the Project Deliverables, Client and Contractor Responsibilities, Professional Services and Licensing Fees, Project Plan, Support Escalation Process, Pricing Schedule, Business Requirements, Functional Design, Change Order Authorization, and Solution Delivery and Acceptance.

A checkmark incorporates the referenced document into this agreement.

☐ Statement of Services - Addendum A (Cloud Solution).

☐ Statement of Services - Addendum B (On-Premises Solution).

☐ Statement of Services - Addendum C (Hybrid Solution).

Project Deliverable(s)

Based on the agreed upon business requirements, Contractor will provide the following:

- Statement of Service (SOS).
- Master Software and Services Agreement (MSSA).
- Professional Services as defined in the SOS.
- Software documentation is provided with the Contractor provided Software.
- User and Administration manual.
- User Acceptance Testing Recommendations.

NOTE: For the on-premises components of the deployed solution, it is the responsibility of the Client to meet

the minimum installation pre-requisites provided to them prior to the installation of the software.

5. Services

Contractor will provide the following services:

- Consult with Client personnel to implement the solution.
- Inform the Client IT personnel on the features of the solution.
- Deployment, configuration, and integration of solution.
- Training:
  - Administrative training.
  - End user to use the solution.

Provide Details of the Services being rendered for the specific solution implemented. Remove these highlighted notes prior to submission of this SOS to Client.

<Replace this line with details of the services being provided for this solution>

6. Project Milestones

Notes: The milestones table below is intended as a sample. Update as needed. Remove the highlighted notes prior to submission of this SOS to Client.

Milestone Description	Milestone Date
<enter Solution Name>	
1. Initiating and Planning complete	Mutually established between Client and Contractor
2. Executing complete	Mutually established between Client and Contractor
3. Monitoring and Controlling complete	Mutually established between Client and Contractor
4. Solution Delivery and Acceptance complete	Mutually established between Client and Contractor
5. Project Complete	Mutually established between Client and Contractor

7. Completion Criteria

When the services detailed in this SOS have been completed and demonstrated, the project will be considered complete, and Contractor will request Client signoff of the Solutions Delivery and Acceptance document referenced in this SOS within 15 days of Project Plan completion.

8. Change Management

This SOS is intended to provide, as much as possible, a clear understanding of the responsibilities of the parties concerning these Project Services. Changes to the scope, assumptions, personnel, environment, dependencies, timeline, Software or Deliverables post execution of this SOS will be communicated in writing and agreed to by both Contractor and Client via Contractor's Project Management personnel. A Change Order Authorization ("COA") form will be added to this agreement to amend and set forth the effective date, purpose, description, and price, if applicable.

The work required to address these changes will be scoped and presented to Client as a COA with any

additional time, materials, or cost. The following list provides a detailed process to follow if changes to the scope of this SOS are required.

- A COA will be the vehicle for communicating change and will be prepared by the Contractor lead Solutions Analyst assigned to this project. The COA must describe the change, the reason for the change, and the effect the change will have on the project.
- Both Client and Contractor will review the proposed change and approve. The review will determine the effect the COA will have on price, schedule, and other terms and conditions of this SOS.
- Both parties must sign a written COA to authorize the implementation of any changes.

9. Support

Contractor will provide implementation support for this project through to its completion. This includes but is not limited to ensuring installed applications are performing to manufacturer's specifications.

Upon completion of the project, and provided client is up to date with their maintenance and support payments, Client will have access to a Contractor support engineer for technical issues. Support will continue to be available throughout the term of the contract and upon renewal of the contract.

10. SOS – Assumptions

The following are the general assumptions on which this SOS and Professional Services Fee are based. If any of these assumptions either change or are incorrect a COA may be required, which may result in additional Professional Services fees.

- Building environmental conditions that are within equipment specifications for airflow, temperature, humidity, and electrical quality.

Project work will be performed during normal business hours Monday through Friday 8 a.m. to 5 p.m. local time, excluding holidays. Client will provide unimpeded access to equipment and facilities. If access delays occur, work performed outside of normal business hours may incur an overtime premium.

- Contractor:
  - Is not responsible for any conflicts with existing hardware or software that is no longer supported by the manufacturer.
  - Is only responsible for integration tasks outlined in this proposed SOS.
  - At Contractor's discretion project work may be provided remotely in whole, or in part.
- All systems will be installed in US English (other localized language configurations can be provided at an incremental cost).

DocuSign Envelope ID: C764E410-020D-4DE5-99C8-4C5B8EF55B29

Exhibit A: Referenced Documents Table

A checkmark incorporates the document into this agreement.

Applicable	Document Title	Document Description
☐	**Project Plan**	Project Plan describes the execution, management, and control of the project
☐	**Pricing Schedule**	Provides pricing and line-item details as necessary.
☐	**Solutions Delivery and Acceptance**	Acknowledgement form: client acknowledges and confirms that the deliverable, milestone and/or project referenced has been completed, and all testing and acceptance criteria have been satisfied.
☐	**Change Order Authorization**	Document to be executed when the original project scope has changed post SOS authorization by client.
☐	**Support Escalation Process**	Describes steady state user-support escalation process.
☐	**Business Requirements Document**	The BRD outlines the details for a project including the documentation of Client needs and expectations. The BRD is intended to highlight the project Scope, Requirements, Assumptions, Constraints, and Risks.
☐	**Functional Design Document**	The FDD provides an overview of the business issue to be addressed, a mock-up of the User Interface (UI) design, and a plain English synopsis of the logic anticipated. This document provides the Client with the opportunity to approve the high-level design before the effort is made to develop a detailed or technical design.

ATTACHMENT 15 – TOSHIBA SAAS STATEMENT OF SERVICES

This addendum is hereby incorporated by reference as Addendum A to the Statement Of Service ("SOS") by and between Toshiba America Business Solutions, Inc. ("Contractor") and ("Client").

Associated Project SOS Name: <Enter Associated Proejct SOS Name Here>
Associated Project MSSA Name: <Enter Associated Proejct MSSA Name Here>

Client Responsibilities

The following activities are the responsibility of Client.
The "Client Responsibilities – Details" is the Solution specific activities that are defined as the responsibility of Client. If any of these responsibilities either change or are incorrect a (COA) Change Order Authorization may be required, which may result in additional Professional Services fees.

- Ensure that all applications and data are successfully backed up prior to Contractor beginning project services detailed in the SOS.
- Provide technical and application support for configuration and testing of Client specific information. Contractor does not warrant Client applications.
- Provide systems personnel for the project familiar with all aspects of Client's enterprise configuration – security, remote access, domain structure, WAN/LAN connectivity, applications used for this project – to work in conjunction with the Contractor team on this implementation. Additionally, a desktop technician may be required to perform Client -side duties.
- Make available all the appropriate resources, systems, network access, reports and any/all other data elements required for Contractor to complete the deliverables and other research necessary to complete this project as contained herein.
- Provide a dedicated project manager or coordinator to provide management, reporting, day to day project tracking, move/add/change requirements, and cross-coordination of requirements.
- Network connectivity between all solution components.
- Deploy Solution to Client end-user desktops (if required).
- Identify a Project Sponsor with sign-off authority and ability to facilitate Client stakeholder participation.
- Report on any Client technical or resource issues that would delay, hinder, or adversely affect the deployment of the solution or its performance in the Client environment.
- Allow for the distribution of Solution upgrades to Client PC's as needed.
- Accept title and/or license upon delivery/installation for product and/or Solution purchased if applicable.
- Sign appropriate Contractor finance document for leased or financed transactions.

Contractor Responsibilities

The following activities are the responsibility of Contractor.
The "Contractor Responsibilities – Details" is the Solution specific activities that are defined as the responsibility of Client. If any of these responsibilities either change or are incorrect a COA may be required, which may result in additional Professional Services fees.

- Solution license key.
- Technical specifications for implementation.
- Email and phone support for the duration of the contract.
- Technical Services included in the scope herein.
- Configuration of the Solution components.
- Solution training.
- Solution revisions, updates, and patches during the term of the agreement.
- Support for the Solution updates for any of the on-premises components of the solutions defined in this SOS is included in this Agreement.

Support

Contractor will provide implementation support for this project through to its completion. This includes but is not limited to ensuring installed applications are performing to manufacturer's specifications.

Upon completion of the project, Client will have access to a Contractor support Engineer for technical issues. Support will continue to be available throughout the term of the contract and upon renewal of the contract.

Professional Services and License Fees

A checkmark incorporates the referenced table into this agreement.

☐ **TABLE 1: SaaS FEES:**

This is a fixed fee engagement. If applicable the Professional Services fees for this project are included in the terms of the lease agreement signed by Client. Any changes to this SOS will require a Change Order executed and agreed upon by both parties. Contractor cannot perform work outside of the scope of this SOS without an authorized Change Order signed by Client.

Services Fees	
Initial Investment	**$<Enter Initial Client's Payment Here>**
License Fees	**$<Enter Licensing Fee Here> (renewable annually)**
(includes M&S)	

Taxes, if applicable, are not included and will be invoiced separately.

This document is valid for a period of 30 days from the cover date; after this date it may be revised upon consent by Contractor.

Expenses associated with travel, overnight stays, etc., for the hours estimated in this SOS are included in the estimate of this project.

ATTACHMENT 16 – TOSHIBA ON-PREMISES STATEMENT OF SERVICES

This addendum is hereby incorporated by reference as Addendum B to the Statement Of Service ("SOS") by and between Toshiba America Business Solutions, Inc. ("Contractor") and ("Client").

Associated Project SOS Name: <Enter Associated Proejct SOS Name Here>
Associated Project MSSA Name: <Enter Associated Proejct MSSA Name Here>

Client Responsibilities

The following activities are the responsibility of Client.
The "Client Responsibilities – Details" is the Solution specific activities that are defined as the responsibility of Client. If any of these responsibilities either change or are incorrect a COA may be required, which may result in additional Professional Services fees. Please review this section to make sure these responsibilities are correct.

- Ensure that all applications and data are successfully backed up prior to Contractor beginning work. Contractor is not responsible for any lost information.
- Provide original manufacturer documentation for all existing hardware and Solution.
- Provide Backup equipment and media.
- Provide UPS equipment and media.
- Provide technical and application support for configuration and testing of Client specific information. Contractor does not warrant Client applications.
- Provide systems personnel for the project familiar with all aspects of Client's enterprise configuration – security, remote access, domain structure, WAN/LAN connectivity, applications used for this project – to work in conjunction with the Contractor team on this implementation. Additionally, a desktop technician may be required to perform Client - side duties.
- Make available all the appropriate resources, systems, network access, reports and any/all other data elements required for Contractor to complete the deliverables and other research necessary to complete this project as contained herein.
- Provide a dedicated project manager or coordinator to provide management, reporting, day to day project tracking, move/add/change requirements, and cross-coordination of requirements.
- Network configuration information to assist in solution design.
- Deploy Solution to Client end-user desktops (if required).
- Suitable hardware to host the Solution application components.
- Suitable Operating Systems Solution and licenses for the above.
- Identify a Project Sponsor with sign-off authority and ability to facilitate Client stakeholder participation.
- Report on any Client technical or resource issues that would delay, hinder or adversely affect the deployment of the solution or its performance in the Client environment.
- Provide the appropriate physical and network access to onsite resources, including IT area and all necessary fees, licenses, and release forms, related to photos, logos, and imagery that are to be provided to Contractor.
- Provide a workspace for Contractor staff to use if on-site work is required.
- Allow for the distribution of Solution upgrades to Client PCs as needed.
- Hardware and Solution maintenance for all servers.
- System Maintenance Tasks:
    - Resolution of Solution system alerts as listed in the solution application.
    - Daily monitoring of Server Health.
    - Backup of all Solution data and system settings.
    - Distribution of Solution upgrades to Client PCs as needed.
    - Installation and deployment of Solution updates.
    - Inclusion of Solution servers in routine maintenance activities (anti-virus, backup, etc.).
- Accept title and/or license upon delivery/installation for product and/or Solution purchased if applicable.

- Sign appropriate Contractor finance document for leased or financed transactions.

Contractor Responsibilities

The following activities are the responsibility of Contractor.
The "Contractor Responsibilities – Details" is the Solution specific activities that are defined as the responsibility of Contractor. If any of these responsibilities either change or are incorrect a COA may be required, which may result in additional Professional Services fees.

- Solution License Key.
- Technical specification for implementation.
- Installation of the Solution components.
- Email and phone support for the duration of the contract.
- Technical Services included in the scope herein.
- Configuration of the Solution components.
- Solution training.
- Solution revisions, updates, and patches during the term of the agreement.
- Support for the download of Solution updates for the solutions defined in this SOS is included in this Agreement.
- Services associated with this installation and deployment of updates, patches, bug fixes and updates for the components of the solutions defined in this SOS are outside of this agreement and will require a separate project plan and SOS.

Support

Contractor will provide implementation support for this project through to its completion. This includes but is not limited to ensuring installed applications are performing to manufacturer's specifications.

Upon completion of the project, Client will have access to a Contractor support Engineer for technical issues. Support will continue to be available throughout the term of the contract and upon renewal of the contract.

Note: *If applicable, refer to the* ***Statement of Services Support Escalation Process - Addendum E*** *document referenced in this SOS for support details.*

Professional Services and License Fees

A checkmark incorporates the referenced document into this agreement.

TABLE 1: FIXED FEE ENGAGEMENT:

This is a fixed fee engagement. If applicable the Professional Services fees for this project are included in the terms of the lease agreement signed by Client. Any changes to this SOS will require a Change Order executed and agreed upon by both parties. Contractor cannot perform work outside of the scope of this SOS without an authorized Change Order signed by Client.

Professional Service Fees $XXXXXX.XX

Taxes, if applicable, are not included and will be invoiced separately.

This document is valid for a period of 30 days from the cover date; after this date it may be revised upon consent by Contractor.

Expenses associated with travel, overnight stays, etc., for the hours estimated in this SOS are included in the estimate of this project.

☐ **TABLE 2: TIME AND MATERIALS ENGAGEMENT:**

This is a time and materials engagement. The Professional Services fees for this project are inclusive for up to XX hours. The hours are an estimate based upon our current understanding of the project. Any changes to this Statement of Service will require a Change Order executed and agreed upon by both parties. Contractor cannot perform work outside of the scope of this SOS without an authorized Change Order signed by Client.

Professional Service Fees $XXXXXX.XX

Taxes, if applicable, are not included and will be invoiced separately.

This document is valid for a period of 30 days from the cover date; after this date it may be revised.

Expenses associated with travel, overnight stays, etc., for the hours estimated in this SOS are included in the estimate of this project.

☐ **TABLE 3: BLOCK OF HOURS ENGAGEMENT:**

This is a Block of Hours engagement. The Professional Services fees for this project are limited to XX hours. If additional hours are required, additional Block of Hours must be purchased using a Change Order executed and agreed upon by both parties. Contractor cannot perform work outside of the scope of this SOS without an authorized Change Order signed by Client.

Professional Service Fees $XXXXXX.XX

Taxes, if applicable, are not included and will be invoiced separately.

This document is valid for a period of 30 days from the cover date; after this date it may be revised.
Expenses associated with travel, overnight stays, etc., for the hours estimated in this SOS are included in the estimate of this project.

ATTACHMENT 17 – TOSHIBA HYBRID STATEMENT OF SERVICES

This addendum is hereby incorporated by reference as Addendum C to the Statement Of Service ("SOS") by and between Toshiba America Business Solutions, Inc. ("Contractor") and ("Client").

Associated Project SOS Name: <Enter Associated Proejct SOS Name Here>
Associated Project MSSA Name: <Enter Associated Proejct MSSA Name Here>

Client Responsibilities

The following activities are the responsibility of Client.
The "Client Responsibilities – Details" is the Solution specific activities that are defined as the responsibility of Client. If any of these responsibilities either change or are incorrect a (COA) Change Order Authorization may be required, which may result in additional Professional Services fees.

- Ensure that all applications and data are successfully backed up prior to Contractor beginning project services detailed in the SOS.
- Provide technical and application support for configuration and testing of Client specific information. Contractor does not warrant Client applications.
- Provide systems personnel for the project familiar with all aspects of Client's enterprise configuration – security, remote access, domain structure, WAN/LAN connectivity, applications used for this project – to work in conjunction with the Contractor team on this implementation. Additionally, a desktop technician may be required to perform Client -side duties.
- Make available all the appropriate resources, systems, network access, reports and any/all other data elements required for Contractor to complete the deliverables and other research necessary to complete this project as contained herein.
- Provide a dedicated project manager or coordinator to provide management, reporting, day to day project tracking, move/add/change requirements, and cross-coordination of requirements.
- Network connectivity between all solution components.
- Deploy Solution to Client end-user desktops (if required).
- Identify a Project Sponsor with sign-off authority and ability to facilitate Client stakeholder participation.
- Report on any Client technical or resource issues that would delay, hinder, or adversely affect the deployment of the solution or its performance in the Client environment.
- Allow for the distribution of Solution upgrades to Client PC's as needed.
- Accept title and/or license upon delivery/installation for product and/or Solution purchased if applicable.
- Sign appropriate Contractor finance document for leased or financed transactions.

Specific to on-premises components - Client responsibilities:

- Suitable hardware to host the Solution application components.
- Suitable Operating System Solution and licenses for the hardware provided.
- Network configuration information to assist in solution design.
- Deploy Solution with the assistance of Client IT Personnel to Client desktops (if required).
- Provide a workspace for Contractor staff to use if on-site work is required.
- Provide Backup equipment and media**.**
- Provide UPS equipment and media.
- Hardware and Solution maintenance for all servers.
- System Maintenance Tasks:
    - Resolution of Solution system alerts as listed in the solution application.
    - Daily monitoring of Server Health.
    - Backup of all Solution data and system settings.
    - Distribution of Solution upgrades to Client PC's as needed.

- Installation and deployment of Solution updates.
- Inclusion of Solution servers in routine maintenance activities (anti-virus, backup, etc.).

Contractor Responsibilities

The following activities are the responsibility of Contractor.
The "Contractor Responsibilities – Details" is the Solution specific activities that are defined as the responsibility of Contractor. If any of these responsibilities either change or are incorrect a COA may be required, which may result in additional Professional Services fees.

- Solution license key.
- Technical specifications for implementation.
- Email and phone support for the duration of the contract.
- Technical Services included in the scope herein.
- Configuration of the Solution components.
- Solution training.
- Solution revisions, updates, and patches during the term of the agreement.
- Support for the Solution updates for any of the on-premises components of the solutions defined in this SOS is included in this Agreement.

Support

Contractor will provide implementation support for this project through to its completion. This includes but is not limited to ensuring installed applications are performing to manufacturer's specifications.

Upon completion of the project, Client will have access to a Contractor support Engineer for technical issues. Support will continue to be available throughout the term of the contract and upon renewal of the contract.

Professional Services and License Fees

A checkmark incorporates the referenced table into this agreement.

☐ **TABLE 1: SaaS FEES:**

This is a fixed fee engagement. If applicable the Professional Services fees for this project are included in the terms of the lease agreement signed by Client. Any changes to this SOS will require a Change Order executed and agreed upon by both parties. Contractor cannot perform work outside of the scope of this SOS without an authorized Change Order signed by Client.

Services Fees

Initial Investment **$<Enter Initial Client's Payment Here>**

License Fees **$<Enter Licensing Fee Here> (renewable annually)**

(includes M&S)

Taxes, if applicable, are not included and will be invoiced separately.

This document is valid for a period of 30 days from the cover date; after this date it may be revised upon consent by Contractor.

Expenses associated with travel, overnight stays, etc., for the hours estimated in this SOS are included in the estimate of this project.

DocuSign Envelope ID: C764E410-020D-4DE5-99C8-4C5B8EF55B29

TOSHIBA

Master Software and Services Agreement

This MASTER SOFTWARE AND SERVICES AGREEMENT ("Agreement") is entered into as of the Effective Date by and between Toshiba America Business Solutions, Inc. a California corporation with an address of 25530 Commercentre Drive, Lake Forest, CA 92630 ("TABS") including its division Toshiba Business Solutions ("TBS"), (collectively or individually TABS and TBS shall be referred to as the "Contractor") and the Client specified below ("Client"). For on-premises based software solutions only, the following clauses are not applicable to this Agreement and hereby stricken 1.2, 1.8, 4, 6, and 8. For cloud-based or hybrid solutions (whereby both an on-premises solution(s) and cloud-based solution(s) will be implemented), all terms apply.

1. **Definitions**.

1.1 "Confidential Information" means, with respect to a party hereto, all information or material which (i) the party identifies in writing as confidential; and (ii) which from all the relevant circumstances should reasonably be assumed to be confidential and proprietary, whether or not marked, designated, or otherwise identified as "confidential" or "proprietary." Neither party shall have any obligation with respect to information which: (i) is or becomes generally known to the public by any means other than a breach of the obligations of a receiving party; (ii) was previously received by the receiving party without restriction or received by the receiving party from a third party who had a lawful right without restriction to disclose such information; or (iii) is independently developed by the receiving party without reference to Confidential Information.

1.2 "Data Management Services" or "DMS" means the Internet-based transactional application and database services provided by Contractor that are accessible to Client through the Internet for managing business processes and information.

1.3 "Documentation" means the documentation, including any Third Party Materials provided by or on behalf of Contractor with the Product at the time of delivery and any updates that Contractor may, in its discretion, provide from time-to-time. The Documentation will be included in the definition of "Product" under this Agreement and subject to all restrictions and limitations relating to the Product.

1.4 "Licensed Entities" means those Client entities specifically identified in a SOS as licensed to use a Product.

1.5 "SOS," or "Statement of Services," "Statement of Work," of "Statement of Support" as applicable, is defined in Section 2.

1.6 "Product" refers to such Software, Third Party Materials, Subscription Services, and professional Services, including implementation services, consulting and software integration services, outsourced business processing services, and other DMS projects, as each may be licensed by Client under a SOS from time-to-time, including any Documentation.

1.7 "Software" means the object code version of any software that may be licensed by Contractor to Client under a SOS for installation on Client's systems. To the extent any updates or enhancements are delivered to Client as part of Support, such updates and enhancements will be deemed included in the definition of "Software."

1.8 "Subscription Service" means an application or database product hosted by Contractor or its agents, including the DMS, and made available for remote access and use by Client and its Licensed Entities under a SOS.

1.9 "Support" means Contractor's then current support and maintenance program for the relevant Product, as more fully described in the relevant SOS.

1.10 "Third Party Materials" means software and data licensed or provided by third parties. Applicable third-party license agreements and disclaimers, if any, will be provided with the relevant Products.

2. **SOS**. This is a master software and services agreement under which Client may place an order for one or more Products under a Statement of Services or Statement of Work, as applicable. Each order will be set forth in a written SOS or other form provided by Contractor, which is only effective when signed by both parties. The SOS will (i) specifically reference and is governed by this Agreement and (ii) identify the relevant Product being licensed, the term of license or subscription, and any other relevant terms not otherwise set forth in this Agreement. The form of SOS is attached to and made a part of this Agreement as Schedule A-1 (Statement of Services), Schedule A-2 (Statement of Work), and Schedule A-3 (Statement of Support).

3. **Software License**. This Section applies only in the event Client licenses Software from Contractor pursuant to a SOS. Subject to the terms and conditions of this Agreement and Client's payment of all relevant fees, Contractor hereby grants to Client a non-exclusive, perpetual, non-transferable (except pursuant to Section 22.1), limited license to use for its internal business purposes the Software at the Licensed Entities. Client may make one copy of the Software for backup and archival purposes.

4. **Subscription Services License**. This Section applies only in the event Client licenses Subscription Services as a Software as a Service ("Subscription Services") from Contractor pursuant to a SOS. Subject to the terms and conditions of this Agreement and Client's payment of all relevant fees, Contractor hereby grants to Client a non-exclusive, non-transferable (except as otherwise set forth herein), limited license to access and use for its internal business purposes the Subscription Services in connection with the Licensed Entities. The initial term of the foregoing license will be as set forth in the applicable SOS. Client shall be solely responsible for connection of Client's systems to a telecommunications service that provides Internet access for purposes of Client's access and use of the Subscription Services.

5. **Restrictions**. Client may only use the Products as described in the applicable Documentation, including operation of Software only on the hardware and software configurations specified in the

DocuSign Envelope ID: C764E410-020D-4DE5-99C8-4C5B8EF55B29

SOS or associated Documentation. Client shall ensure the Licensed Entities comply with all applicable terms of this Agreement. Any breach of this Agreement by any employee or agent of Client shall constitute a breach by Client. Except as expressly authorized by this Agreement, Client will not (and will not allow any third party to): (i) permit any unauthorized user or any third party to access and use the Products; (ii) decompile, disassemble, or reverse engineer the Products,; (iii) use the Products or any Contractor Confidential Information to develop a competing product or service; (iv) use or allow others to use any Product for the benefit of any third party; (v) use any Product, or allow the transfer, transmission, export, or re-export of any Product or portion thereof, in violation of any export control laws or regulations administered by the U.S. Commerce Department or any other government agency; or (vi) remove any copyright, trademark, proprietary rights, disclaimer or warning notice included on or embedded in any part of a Product (including any screen displays, etc.) or any other products or materials provided by Contractor hereunder. Under no circumstances, shall Contractor be liable or responsible for any use, or any results obtained by the use, of the Products in conjunction with any other software or third-party products. All such use shall be at Client's sole risk.

6. **Availability of Subscription Services**. The provisions of this Section apply only to Subscription Services. The Subscription Services will be available for access and use by Client in accordance with the terms set forth in the applicable SOS or Third-Party Materials. The Subscription Services will be available for access and use by Client an average of at least ninety-five percent (95%) of the time ("Availability Requirement"), excluding any period of Permitted Unavailability (as defined below). Client shall provide notice to Contractor of any unavailability for access or use and document such disruption for review by Contractor. "Permitted Unavailability" includes Planned Outages (as defined below) and any unavailability due to causes beyond the reasonable control of Contractor, including, without limitation: any software, hardware, or telecommunication failures; interruption or failure of telecommunication or digital transmission links; Internet slow-downs or failures; failures or default of third party software, vendors, or products; and unavailability resulting from the actions or inactions of Client or a failure of Client's communications link or systems. "Planned Outages" means the period during which Contractor conducts standard systems maintenance. Contractor shall use reasonable efforts to schedule Planned Outages during non-peak hours. In the event Contractor fails to achieve the Availability Requirement, Contractor shall use commercially reasonable efforts to correct the interruption as promptly as practicable. In the event Contractor fails to achieve the Availability Requirement in three consecutive months during the term of this Agreement, Client may terminate this Agreement without further obligation and receive a prorated refund of any pre-paid, unused recurring fees. Such refund shall constitute Client's sole and exclusive remedy and Contractor's sole and exclusive liability for failure to achieve the Availability Requirement.

7. **Information Security for Subscription Services**. Contractor has developed, implemented, and will maintain effective information security policies and procedures that include administrative, technical and physical safeguards designed to (i) ensure the security and confidentiality of confidential information provided to it, (ii) protect against anticipated threats or hazards to the security or integrity of such confidential information, (iii) protect against unauthorized access or use of such confidential information, (iv) minimize accidental or unlawful destruction, loss, alteration or unauthorized disclosure or access of Client Data (as such term is defined in Section 8), and (v) ensure the proper disposal of confidential information. All personnel handling such confidential information have been appropriately trained in the implementation of its information security policies and procedures. Contractor regularly audits and reviews its information security policies and procedures to ensure their continued effectiveness and determine whether adjustments are necessary considering then-current circumstances including, without limitation, changes in technology, its or its vendors', contactors', and licensor's information systems or threats or hazards to confidential information. In the event of unauthorized access to confidential information or non-public personal information, each party shall cooperate with the other party, provide any notices and information regarding such unauthorized access to appropriate law enforcement agencies and government regulatory authorities, and affected individuals which are deemed necessary. Contractor shall promptly report to Client any compromise of security that it becomes aware of regarding Client Data and reasonably cooperate with Client in investigating the compromise. CLIENT ACKNOWLEDGES THAT SECURITY SAFEGUARDS, BY THEIR NATURE, ARE CAPABLE OF CIRCUMVENTION AND THAT CONTRACTOR DOES NOT AND CANNOT GUARANTEE THAT THE SUBSCRIPTION SERVICES, CONTRACTOR'S SYSTEMS, AND THE INFORMATION CONTAINED THEREIN (INCLUDING CONFIDENTIAL INFORMATION) CANNOT BE ACCESSED BY UNAUTHORIZED PERSONS CAPABLE OF OVERCOMING SUCH SAFEGUARDS. CONTRACTOR SHALL NOT BE RESPONSIBLE OR LIABLE FOR ANY SUCH UNAUTHORIZED ACCESS NOR SHALL ANY SUCH UNAUTHORIZED ACCESS CONSTITUTE A BREACH BY CONTRACTOR OF ITS CONFIDENTIALITY OBLIGATIONS HEREUNDER.

8. **Ownership; Client Data**.

8.1 Ownership. The Products are licensed, not sold. Except for the limited licenses granted in Sections 3 and 4, Contractor and its licensors reserve all right, title, and interest, express or implied, in and to the Products. Client acknowledges and agrees it shall not use any Confidential Information disclosed by Contractor to Client in connection with this Agreement to contest the validity of any

DocuSign Envelope ID: C764E410-020D-4DE5-99C8-4C5B8EF55B29

SOS or associated Documentation. Client shall ensure the Licensed Entities comply with all applicable terms of this Agreement. Any breach of this Agreement by any employee or agent of Client shall constitute a breach by Client. Except as expressly authorized by this Agreement, Client will not (and will not allow any third party to): (i) permit any unauthorized user or any third party to access and use the Products; (ii) decompile, disassemble, or reverse engineer the Products,; (iii) use the Products or any Contractor Confidential Information to develop a competing product or service; (iv) use or allow others to use any Product for the benefit of any third party; (v) use any Product, or allow the transfer, transmission, export, or re-export of any Product or portion thereof, in violation of any export control laws or regulations administered by the U.S. Commerce Department or any other government agency; or (vi) remove any copyright, trademark, proprietary rights, disclaimer or warning notice included on or embedded in any part of a Product (including any screen displays, etc.) or any other products or materials provided by Contractor hereunder. Under no circumstances, shall Contractor be liable or responsible for any use, or any results obtained by the use, of the Products in conjunction with any other software or third-party products. All such use shall be at Client's sole risk.

6. **Availability of Subscription Services**. The provisions of this Section apply only to Subscription Services. The Subscription Services will be available for access and use by Client in accordance with the terms set forth in the applicable SOS or Third-Party Materials. The Subscription Services will be available for access and use by Client an average of at least ninety-five percent (95%) of the time ("Availability Requirement"), excluding any period of Permitted Unavailability (as defined below). Client shall provide notice to Contractor of any unavailability for access or use and document such disruption for review by Contractor. "Permitted Unavailability" includes Planned Outages (as defined below) and any unavailability due to causes beyond the reasonable control of Contractor, including, without limitation: any software, hardware, or telecommunication failures; interruption or failure of telecommunication or digital transmission links; Internet slow-downs or failures; failures or default of third party software, vendors, or products; and unavailability resulting from the actions or inactions of Client or a failure of Client's communications link or systems. "Planned Outages" means the period during which Contractor conducts standard systems maintenance. Contractor shall use reasonable efforts to schedule Planned Outages during non-peak hours. In the event Contractor fails to achieve the Availability Requirement, Contractor shall use commercially reasonable efforts to correct the interruption as promptly as practicable. In the event Contractor fails to achieve the Availability Requirement in three consecutive months during the term of this Agreement, Client may terminate this Agreement without further obligation and receive a prorated refund of any pre-paid, unused recurring fees. Such refund shall constitute Client's sole and exclusive remedy and Contractor's sole and exclusive liability for failure to achieve the Availability Requirement.

7. **Information Security for Subscription Services**. Contractor has developed, implemented, and will maintain effective information security policies and procedures that include administrative, technical and physical safeguards designed to (i) ensure the security and confidentiality of confidential information provided to it, (ii) protect against anticipated threats or hazards to the security or integrity of such confidential information, (iii) protect against unauthorized access or use of such confidential information, (iv) minimize accidental or unlawful destruction, loss, alteration or unauthorized disclosure or access of Client Data (as such term is defined in Section 8), and (v) ensure the proper disposal of confidential information. All personnel handling such confidential information have been appropriately trained in the implementation of its information security policies and procedures. Contractor regularly audits and reviews its information security policies and procedures to ensure their continued effectiveness and determine whether adjustments are necessary considering then-current circumstances including, without limitation, changes in technology, its or its vendors', contactors', and licensor's information systems or threats or hazards to confidential information. In the event of unauthorized access to confidential information or non-public personal information, each party shall cooperate with the other party, provide any notices and information regarding such unauthorized access to appropriate law enforcement agencies and government regulatory authorities, and affected individuals which are deemed necessary. Contractor shall promptly report to Client any compromise of security that it becomes aware of regarding Client Data and reasonably cooperate with Client in investigating the compromise. CLIENT ACKNOWLEDGES THAT SECURITY SAFEGUARDS, BY THEIR NATURE, ARE CAPABLE OF CIRCUMVENTION AND THAT CONTRACTOR DOES NOT AND CANNOT GUARANTEE THAT THE SUBSCRIPTION SERVICES, CONTRACTOR'S SYSTEMS, AND THE INFORMATION CONTAINED THEREIN (INCLUDING CONFIDENTIAL INFORMATION) CANNOT BE ACCESSED BY UNAUTHORIZED PERSONS CAPABLE OF OVERCOMING SUCH SAFEGUARDS. CONTRACTOR SHALL NOT BE RESPONSIBLE OR LIABLE FOR ANY SUCH UNAUTHORIZED ACCESS NOR SHALL ANY SUCH UNAUTHORIZED ACCESS CONSTITUTE A BREACH BY CONTRACTOR OF ITS CONFIDENTIALITY OBLIGATIONS HEREUNDER.

8. **Ownership; Client Data**.

8.1 Ownership. The Products are licensed, not sold. Except for the limited licenses granted in Sections 3 and 4, Contractor and its licensors reserve all right, title, and interest, express or implied, in and to the Products. Client acknowledges and agrees it shall not use any Confidential Information disclosed by Contractor to Client in connection with this Agreement to contest the validity of any

DocuSign Envelope ID: C764E410-020D-4DE5-99C8-4C5B8EF55B29

Contractor intellectual property. Any such use of Contractor's information and data shall constitute a material, non-curable breach of this Agreement.

8.2 Client Data. Except for the limited license below, nothing contained in this Agreement shall be construed as granting Contractor any right, title, or interest in or to any Client provided data or other content input into the Products, including Personal Data (as defined in Section 8.3) (the "Client Data"). Client grants Contractor the perpetual, non-exclusive, irrevocable, royalty-free, worldwide, sublicensable right and license to collect, store, use, compile, modify, translate and disclose such Client Data: (i) as stated in Contractor's Privacy Policy; (ii) as required by law; (iii) in the improvement or other development of Contractor's product and services, including the Products; (iv) in aggregated form that does not identify Client; and (v) in connection with performing its obligations under this Agreement .

8.3 Personal Data. If Client or it's users or any third parties acting on Client's behalf, access or use a Product to collect, store, process, transmit, by any means any information from which a person (a data subject) can be reasonably identified ("Personal Data"), Client shall ensure that all such activities and use comply with applicable laws and data subject rights. Client shall provide legally adequate privacy notices to the required parties, and obtain all necessary consents from the data subjects of the Personal Data (and parental consents where applicable), including under the Children's Online Privacy Protection Act ("COPPA"), the General Data Protection Regulation ("GDPR"), the UK General Data Protection Regulation ("UK GDPR"), California Consumer Privacy Act ("CCPA") and similar laws. Client represents to Contractor that Client has provided all necessary privacy notices, obtained all necessary consents, and possesses lawful grounds to allow Client to access and use the Products in accordance with the terms of this Agreement and applicable laws. Client is responsible for notifying Contractor if any data collected or stored using the Products must be deleted under applicable laws.

8.4 Processing of Personal Data. The storage, processing, and transmission of Client Data is an essential feature of the Products. Client consents to Contractor and its contractors, and affiliates, collecting, storing, processing, and transmitting Client Data and Personal Data included therein. This Agreement incorporates Contractor's Privacy Policy, as may be updated from time to time.

8.5 Sharing Personal Data. In addition, certain Products may provide the ability to share content with other users and third parties, which may include the ability to share and display information about an individual (e.g., name, email address, username) when such functionality. By choosing to use the applicable Products and sharing functionality, Client consents to the sharing of such information for this purpose.

8.6 Diagnostics and Telemetry Data. Contractor may store diagnostic and telemetry data about the operation of the Products, including performance, usage, configuration, and errors ("Telemetry Data"). Contractor may periodically transmit and receive the Telemetry Data from the Products. Client Data does not include Telemetry Data. Contractor does not access or transmit Client Data as part of the Telemetry Data. Contractor retains all rights, title, and interest to the Telemetry Data.

8.7 Client Data Warranties. Client represents and warrants that it has obtained all rights, consents, and permissions necessary to input the Client Data into the Products and to grant the foregoing rights and licenses to Contractor, and that: (i) Client either owns or has the right to authorize Contractor's use of Client Data as set forth herein, (ii) the Client Data does not infringe, misappropriate, or otherwise violate any copyright, trademark, patents, trade secrets or other proprietary rights.

9. **Registration**. Contractor may request certain information in connection with the registration of Products, including contact name, email address, username, or password. By providing this information, Client consents to its collection and use by Contractor in accordance with Contractor's Privacy Policy, to provide non-promotional communications regarding the Products, including notices related to Client's account, transactions, update availability, Product recalls, safety concerns, or changes to our policies and terms. Client is responsible for maintaining the confidentiality of its username, password, and account information, and for all activities that occur in connection with Client's account and or under any username and password or account associated with Client's account. Client is also responsible for the accuracy of the information provided in connection with Client's account and any user thereunder, and for keeping such account information up to date. Client assumes all responsibility for any loss, theft, or other destruction of any data resulting from any failure to comply with these obligations.

10. **Feedback**. Client may provide suggestions, comments, or other feedback (collectively, "Feedback") to Contractor with respect to its products and services, including the Product. Feedback is voluntary and Contractor is not required to hold it in confidence. Contractor may use Feedback for any purpose without obligation of any kind. Client hereby grants Contractor an irrevocable, non-exclusive, perpetual, royalty-free license to use the Feedback in connection with Contractor's business, including enhancement of the Product.

11. **Support**. To the extent purchased by Client, Contractor shall provide the Support described in the applicable SOS for the Product licensed. Support includes periodic releases, and upgrades and updates to the Products as may be made generally available by Contractor to its Clients for no additional charge from time to time. Any new or additional features or functions may be offered separately and may be subject to additional access or license fees, support or maintenance charges, or other fees and costs. Contractor reserves the right to charge separately for any new Products, databases, and functionality that are not generally released to Contractor's Clients without charge.

12. **Training.** To the extent applicable, Contractor will provide the training services set forth in the SOS. Client shall reimburse

DocuSign Envelope ID: C764E410-020D-4DE5-99C8-4C5B8EF55B29

Contractor for all expenses and out-of-pocket costs related to onsite training.

13. **Term and Renewal**. This Agreement shall commence on the Effective Date and, subject to any earlier permitted termination in accordance with this Agreement, shall remain in effect with respect to each Product until the expiration of both the initial license term set forth for such Product in the applicable SOS relating thereto and any renewal terms therefore as provided in this Section 13. Each SOS will specify an initial term for the license granted with respect to each such Product.

14. **Termination**.

14.1 Termination for Cause. Either party may terminate this Agreement on written notice to the other party if the other party is in material breach of its obligations hereunder and fails to cure the breach within thirty (30) days of such written notice. In addition, either party may, in its sole discretion, elect to (i) terminate this Agreement on written notice to the other party upon the bankruptcy or insolvency of the other party or upon the commencement of any voluntary or involuntary winding up, or upon the filing of any petition seeking the winding up of the other party, or (ii) terminate any relevant SOSs or this Agreement, as the case may be, as and when permitted by and in accordance with Sections 6, 15.1, or 20.

14.2 Termination for Convenience. Client may terminate any SOS or this Agreement upon sixty (60) days advance written notice to Contractor, without cause if Client pays Contractor a cancellation fee equal to one hundred percent (100%) of the average actual fees charged for the prior four (4) month period, multiplied by the remaining billable months in the then applicable SOS term ("Cancellation Fee"). Client agrees to pay any Cancellation Fee within fifteen (15) days of the effective date of termination. Client acknowledges that such Cancellation Fee is not a penalty, but is intended to be liquidated damages, the actual damages being too difficult to determine in advance. Payment of the Cancellation Fee is the sole remedy for Client's early termination.

14.3 Effect of Termination. Upon any termination or expiration of a SOS or this Agreement, all rights and licenses granted to the Products will automatically terminate and Client shall have no further right to possess, access, or use the Products. Any termination of the Agreement shall terminate all outstanding SOS(s). On Contractor's request, Client shall provide Contractor with a signed written statement confirming that any Software has been permanently removed from Client's systems, if applicable. If termination does not result from a breach of this Agreement by Client, subject to the terms for any Third-Party Materials, Client shall have the limited right for thirty (30) days after such license termination to export or print Client entered information from the Product and not to enter any new information into the Product or use it for any other purpose. Client may, at its option and subject to the terms for any Third-Party Materials, extend the foregoing thirty (30) day period for up to six (6) months at Contractor's then current transition services rates, providing such rates do not exceed NASPO ValuePoint Master Agreement pricing; all access to the Product during this period shall be read-only. The following Sections shall survive any termination or expiration of this Agreement: 1, 5, 10, 13, 15 (to the extent of fees accrued prior to termination), 17, 19, 21, and 22.

15. **Fees**.

15.1 In general. Client shall pay Contractor the fees set forth in the applicable SOSs. Following the initial year of the license term set forth in the SOS, Contractor, in its sole discretion, may increase the fees due for a renewal term on sixty (60) days written notice prior to the commencement of the renewal term, which adjustment shall be effective on the commencement of the renewal term. During the initial license term set forth in the SOS, any such annual increase shall not exceed NASPO ValuePoint Master Agreement pricing.

15.2 Payment of Invoices. All invoices shall be paid by Client within thirty (30) days of invoice date. Payments not made within forty-five (45) days shall be subject to late charges of (i) one percent (1%) per month of the overdue amount or (ii) the maximum amount permitted under applicable law, whichever is less. In the event an invoice remains unpaid forty-six (46) or more days from the invoice date, Contractor may, in its discretion, terminate the applicable SOS and suspend access to Subscription Services. Client agrees to pay all court costs, fees, expenses and reasonable attorneys' fees incurred by Contractor in collecting delinquent fees. The applicable SOS may specify certain fees to be paid by electronic funds transfer ("EFT"). Client hereby authorizes Contractor to initiate an EFT from Client's bank account indicated in Schedule B in an amount equal to the fees set forth in the applicable SOS in accordance with the payment terms set forth in the applicable SOS. All payments made by EFT will be paid in immediately available funds.

15.3 Taxes. All taxes, duties, fees and other governmental charges of any kind (including sales and use taxes, but excluding taxes based on the gross revenues or net income of Contractor) that are imposed by or under the authority of any government or any political subdivision thereof on the fees for the Products and Support provided by Contractor under this Agreement, shall be borne solely by Client, unless Client can evidence its tax exemption and shall not be considered a part of a deduction from or an offset against such fees. If Client loses tax exempt status, it shall pay any taxes due as part of any renewal or payment. Client shall promptly notify Contractor if its tax status changes.

15.4 Travel and other Expenses. Client will pay, or reimburse Contractor for, any out-of-pocket expenses, including, without limitation, travel and travel-related expenses, incurred by Contractor at the request of or with the approval of Client in connection with the performance of this Agreement. Reasonable and customary expenses incurred by Contractor, including without limitation expenses incurred for travel, local transportation, lodging and meals, will be billed to Client at Contractor's actual cost.

DocuSign Envelope ID: C764E410-020D-4DE5-99C8-4C5B8EF55B29

15.5 Subpoenas and Other Legal Process. In the event Contractor is requested or authorized by Client or is required by government regulation, summons, subpoena or other legal process to produce its documents, Client Data, or personnel as witnesses with respect to the Products and other services provided to Client under this Agreement, Client will, so long as Contractor is not the subject of the investigation or proceeding in which the information is sought, reimburse Contractor at its then current standard professional services rates for its time and materials services, as well as the fees and expenses of its counsel, incurred in responding to such requests.

16. **Suspension of Access to Subscription Services.** The provisions of this Section apply only to Subscription Services. Contractor may, in its sole discretion, suspend Client's access to a Subscription Service for any of the following reasons (i) to prevent damages to, or degradation of, the Subscription Service or Contractor's systems; (ii) to comply with any law, regulation, court order, or other governmental request; (iii) to otherwise protect Contractor from potential legal liability; or (iv) in the event an invoice remains unpaid for more than thirty (30) or more days from the invoice date. Contractor shall use reasonable efforts to provide Client with notice prior to or promptly following any suspension of access to a Subscription Service. Contractor will restore access to the Subscription Service as soon as the event giving rise to suspension has been resolved. This Section shall not be construed as imposing any obligation or duty on Contractor to monitor Client's use of the Subscription Service or the data and other content uploaded by Client to the Subscription Service.

17. **Confidentiality.**

17.1 Each party's Confidential Information shall remain the sole and exclusive property of that party. Each party recognizes the importance of the other's Confidential Information. In particular, each party recognizes and agrees that the Confidential Information of the other is critical to its respective businesses and that neither party would enter into this Agreement without assurance that the other party will take appropriate steps designed to preserve the confidentiality of such information and the value thereof as provided in this Section 17 and elsewhere in this Agreement. The foregoing and the other terms of this Section 17 are and will remain subject to the disclaimers set forth at the end of Sections 7 and 19. Accordingly, each party agrees as follows:

(a) Each party (i) will treat as confidential and use measures that are reasonable, and at least as protective as those it uses to safeguard the confidentiality of its own Confidential Information (but in no event less than reasonable care), to preserve the confidentiality of any and all Confidential Information that it obtains from the other party and (ii) will use or, subject to the disclaimers in Sections 7 and 19, disclose such Confidential Information solely as permitted under this Agreement;

(b) Each party may disclose the other party's Confidential Information or provide access to the same to its responsible employees and agents who reasonably need to know or access such information in connection with the fulfillment of its obligations hereunder and may make copies of Confidential Information only to the extent permitted or contemplated under or pursuant to this Agreement; and

(c) To the extent required by applicable law or by lawful order or requirement of a court or governmental authority having competent jurisdiction over the receiving party, the receiving party may disclose Confidential Information in accordance with such law or order or requirement, subject to the following conditions: (i) as soon as possible after becoming aware of such law, order or requirement, and (ii) prior to disclosing Confidential Information pursuant thereto, the receiving party will so notify the disclosing party in writing and, if possible, the receiving party will provide the disclosing party notice not less than five (5) business days prior to the required disclosure. The receiving party will use reasonable efforts not to release Confidential Information pending the outcome of any measures taken by the disclosing party to contest, otherwise oppose or seek to limit such disclosure by the receiving party and any subsequent disclosure or use of Confidential Information that may result from such disclosure. The receiving party will cooperate with and aid the disclosing party regarding such measures. Notwithstanding any such compelled disclosure by the receiving party, such compelled disclosure will not otherwise affect the receiving party's obligations hereunder with respect to Confidential Information so disclosed.

17.2 Each party acknowledges that due to the unique nature of the other party's Confidential Information, the disclosing party will not have an adequate remedy in money or damages in the event of any unauthorized use or disclosure of its Confidential Information. In addition to any other remedies that may be available in law, in equity or otherwise, the disclosing party shall be entitled to seek injunctive relief to prevent such unauthorized use or disclosure.

17.3 On the expiration or termination of the Agreement, the receiving party shall promptly return to the disclosing party all copies, whether in written, electronic, or other form or media, of the disclosing party's Confidential Information, or destroy all such copies and, if requested by the disclosing party, certify in writing to the disclosing party that such Confidential Information has been destroyed. Each party's obligations of non-disclosure regarding Confidential Information are effective as of the Effective Date and will expire three years from the date first disclosed to the receiving party.

18. **Limited Warranty.** Contractor warrants to Client that for a period of sixty (60) days from delivery or initial use by Client, the Product shall operate in substantial conformity with its Documentation. Third Party Materials are subject to the terms set forth in the applicable third-party license agreements and disclaimers, if any, will be provided with the relevant Products. If Client purchases or procures any third-party products or services as part of the Products that are not provided with their own agreement or terms, Contractor shall pass through or assign to the Client the rights Contractor obtains from the manufacturers, vendors or licensors of such products and services (including

DocuSign Envelope ID: C764E410-020D-4DE5-99C8-4C5B8EF55B29

warranty and indemnification rights), all to the extent that such rights are assignable. To the extent that such rights are not assignable by Contractor, Contractor agrees that Client may assert or enforce any right Contractor may have to enforce such representations, warranties and covenants, or if such can only be enforced by Contractor under its own name, upon written request by Client, Contractor shall take all reasonable action requested by Client to enforce such representations, warranties and covenants. Notwithstanding the foregoing, Client's sole and exclusive remedy, and Contractor's sole and exclusive liability, for a breach of the foregoing warranties shall be the provision of Support services, replacement of a Product if necessary, or a credit for the pre-paid portion of the applicable fee for the affected Product, as determined in Contractor's sole discretion.

19. **Disclaimer of Warranties**. EXCEPT AS PROVIDED IN SECTION 18 (LIMITED WARRANTY), THE PRODUCTS, SUPPORT, TRAINING, AND ANY OTHER SERVICES ARE PROVIDED "AS IS" AND "AS-AVAILABLE," WITH ALL FAULTS, AND WITHOUT WARRANTIES OF ANY KIND. CONTRACTOR AND ITS VENDORS AND LICENSORS DISCLAIM ALL OTHER WARRANTIES, EXPRESS AND IMPLIED, INCLUDING, BUT NOT LIMITED TO, THE IMPLIED WARRANTIES OF MERCHANTABILITY, FITNESS FOR A PARTICULAR PURPOSE, QUIET ENJOYMENT, QUALITY OF INFORMATION, TITLE, AND NON-INFRINGEMENT. ALL THIRD-PARTY MATERIALS ARE PROVIDED AS-IS, WITHOUT WARRANTIES OF ANY KIND. CONTRACTOR MAKES NO WARRANTIES OF ANY KIND, EXPRESS OR IMPLIED, RELATING TO ANY PRESENT OR FUTURE METHODOLOGY EMPLOYED IN ITS GATHERING OR REPRODUCING OF ANY THIRD-PARTY MATERIAL, OR AS TO THE ACCURACY, CURRENCY OR COMPREHENSIVENESS OF THE SAME. CLIENT EXPRESSLY AGREES AND ACKNOWLEDGES THAT USE OF PRODUCTS IS AT CLIENT'S SOLE RISK. NO ORAL OR WRITTEN INFORMATION OR ADVICE GIVEN BY CONTRACTOR OR ITS AUTHORIZED REPRESENTATIVES SHALL CREATE ANY OTHER WARRANTIES OR IN ANY WAY INCREASE THE SCOPE OF CONTRACTOR'S OBLIGATIONS HEREUNDER. CONTRACTOR IS NOT ENGAGED IN RENDERING LEGAL OR OTHER PROFESSIONAL SERVICE. IF LEGAL OR OTHER EXPERT ASSISTANCE IS REQUIRED, THE SERVICES OF A COMPETENT PROFESSIONAL SHOULD BE SOUGHT. CLIENT ASSUMES ALL RESPONSIBILITY WITH RESPECT TO ANY DECISIONS OR ADVICE MADE OR GIVEN AS A RESULT OF THE USE OF THE PRODUCTS. CLIENT AGREES THAT THE PRODUCTS ARE NOT INTENDED TO REPLACE CLIENT'S PROFESSIONAL SKILL AND JUDGMENT AND ARE NOT A SUBSTITUTE FOR THE ADVICE OF AN ATTORNEY OR OTHER PROFESSIONAL.

THE PRODUCTS MAY BE USED TO ACCESS AND TRANSFER INFORMATION, INCLUDING CONFIDENTIAL INFORMATION, OVER THE INTERNET. CLIENT ACKNOWLEDGES AND AGREES THAT CONTRACTOR AND ITS VENDORS AND LICENSORS DO NOT OPERATE OR CONTROL THE INTERNET AND THAT: (I) VIRUSES, WORMS, TROJAN HORSES, OR OTHER UNDESIRABLE DATA OR SOFTWARE; OR (II) UNAUTHORIZED THIRD PARTIES (*E.G.*, HACKERS) MAY ATTEMPT TO OBTAIN ACCESS TO AND DAMAGE CLIENT'S DATA, WEB-SITES, COMPUTERS, OR NETWORKS. CONTRACTOR SHALL NOT BE RESPONSIBLE OR LIABLE FOR ANY SUCH ACTIVITIES NOR SHALL ANY SUCH ACTIVITIES CONSTITUTE A BREACH BY CONTRACTOR OF ITS OBLIGATIONS OF CONFIDENTIALITY HEREUNDER.

20. **Indemnity**. Contractor will indemnify and defend Client from any claim, demand, action, proceeding, judgment, or liability arising out of a claim by a third-party that Client's use of a Product in conformance with the terms of this Agreement infringes a United States patent issued as of the Effective Date or copyright of that third party. The foregoing indemnification obligation of Contractor is contingent upon Client promptly notifying Contractor in writing of such claim, permitting Contractor sole authority to control the defense or settlement of such claim, and providing Contractor reasonable assistance in connection therewith. If a claim of infringement under this Section 20 occurs, or if Contractor determines a claim is likely to occur, Contractor will have the right, in its sole discretion, to either: (i) procure for Client the right or license to continue to use the Product free of the infringement claim; or (ii) modify the Product to make it non-infringing, without loss of material functionality. If either of these remedies is not reasonably available to Contractor, Contractor may, in its sole discretion, immediately terminate the relevant SOS(s) and return the prorated portion of any prepaid, unused fees for future use of the infringing Product. Notwithstanding the foregoing, Contractor shall have no obligation with respect to any claim of infringement that is based upon or arises out of (the "Excluded Claims"): (xi) the use or combination of the Products with any hardware, software, products, data or other materials not provided by Contractor; (xii) modification or alteration of the Products by anyone other than Contractor; (xiii) Client's use of Products in excess of the rights granted in this Agreement; (xiv) any Third Party Materials; (xv) a breach of Client's representations or warranties; or (xvi) the negligence or more culpable acts or omissions (including recklessness or willful misconduct) by Client or any third party on behalf of Client. The provisions of this Section 20 state the sole and exclusive obligations and liability of Contractor and its licensors and suppliers for any claim of intellectual property infringement arising out of or relating to the Products or this Agreement and are in lieu of any implied warranties of non-infringement, all of which are expressly disclaimed.

21. **Limitation of Liability and Damages**. NEITHER CONTRACTOR NOR ITS VENDORS AND LICENSORS SHALL HAVE ANY LIABILITY TO CLIENT OR ANY THIRD PARTY FOR ANY LOSS OF PROFITS, SALES, BUSINESS,

DocuSign Envelope ID: C764E410-020D-4DE5-99C8-4C5B8EF55B29

DATA, OR OTHER INCIDENTAL, CONSEQUENTIAL, OR SPECIAL LOSS OR DAMAGE, INCLUDING EXEMPLARY AND PUNITIVE DAMAGES, OF ANY KIND OR NATURE RESULTING FROM OR ARISING OUT OF THIS AGREEMENT, THE PRODUCTS, AND ANY SERVICES RENDERED HEREUNDER. THE TOTAL LIABILITY OF CONTRACTOR AND ITS VENDORS AND LICENSORS TO CLIENT OR ANY THIRD PARTY ARISING OUT OF THIS AGREEMENT, THE PRODUCTS, AND ANY SERVICES RENDERED HEREUNDER FOR ANY AND ALL CLAIMS OR TYPES OF DAMAGES SHALL NOT EXCEED THE TOTAL FEES PAID OR PAYABLE HEREUNDER BY CLIENT DURING THE TWELVE (12) MONTHS IMMEDIATELY PRECEDING THE FIRST EVENT GIVING RISE TO LIABILITY. The allocations of liability in this Section 21 represent the agreed, bargained-for understanding of the parties and Contractor's compensation hereunder reflects such allocations. The limitation of liability and types of damages stated in this Agreement are intended by the parties to apply regardless of the form of lawsuit or claim a party may bring, whether in tort, contract or otherwise, and regardless of whether any limited remedy provided for in this Agreement fails of its essential purpose.

22. **General Provisions.**

22.1 Assignment. Client may not assign this Agreement without Contractor's prior written authorization, which shall not be unreasonably withheld. Any such permitted assignment, however, shall not increase the scope (including any material change in the size of Client's organization) of the license granted hereunder without payment of Contractor's then-current fees for any increased scope. Any delegation or assignment in violation of the foregoing provisions shall be void and deemed a material breach of this Agreement. This Agreement will bind and inure to the benefit of the parties and their respective successors and permitted assigns.

22.2 Amendment and Waiver. This Agreement may not be modified or amended except by a writing signed by both parties. No waiver of any breach of any provision of this Agreement shall constitute a waiver of any breach of the same or any other provision hereof, and no waiver shall be effective unless made in writing and signed by an authorized representative of the waiving party.

22.3 Governing Law. This Agreement will be governed by, and construed and interpreted according to, the substantive laws of the State of the Client. This choice of venue is intended by the parties to be mandatory and not permissive in nature, and to preclude the possibility of litigation between the parties with respect to, or arising out of, this Agreement in any jurisdiction other than that specified in this Section. Each party waives any right it may have to assert the doctrine of forum *non conveniens* or similar doctrine or theory or to object to venue with respect to any proceeding brought in accordance with this Section. EACH PARTY HEREBY WAIVES ITS RIGHT TO A JURY TRIAL IN CONNECTION WITH ANY DISPUTE OR LEGAL PROCEEDING ARISING OUT OF THIS AGREEMENT OR THE SUBJECT MATTER HEREOF.

22.4 Severability. In the event that any provision of this Agreement is held to be illegal, or otherwise unenforceable, such provision will be severed, stricken and replaced with a legal and enforceable provision which most closely reflects the intent of the parties with respect thereto and the remainder of this Agreement shall continue in full force and effect; provided, however, that if the severing and striking of such provision results in a material alteration of this Agreement not able to be appropriately addressed through a replacement provision as contemplated above, the remaining provisions of this Agreement shall be adjusted equitably so that no party benefits disproportionately.

22.5 Entire Agreement; Purpose and Effect of Agreement. This Agreement, together with the SOS(s) and any other exhibits and attachments hereto and thereto, constitutes the entire agreement between the parties regarding its subject matter and supersedes any and all prior or contemporaneous letters, memoranda, representations, discussions, negotiations, understandings and agreements, whether written or oral, with respect to such subject matter. In the event of a conflict between the body of this Agreement and any SOS, exhibit, other attachment, this Agreement, or the Client's purchase order, the Client's purchase order shall govern.

22.6 Notices. Any notice required or permitted to be given by either party under this Agreement will be made in writing and shall be deemed to have been received upon delivery by hand, by facsimile (followed by delivery of a hard copy thereof within five (5) business days of such facsimile) or via Federal Express, or an equivalent reputable courier service, expense prepaid, addressed to the party as set forth on the signature block hereof or to such other address as a party may designate in writing to the other party.

22.7 Relationship of Parties. The parties to this Agreement are independent contractors; there is no relationship of agency, partnership, joint venture, employment or franchise between the parties. Neither party has the authority to bind the other or to incur any obligation on its behalf.

22.8 Force Majeure. If either party is prevented from performing any of its obligations under this Agreement due to any cause beyond the party's reasonable control, including, without limitation, an act of God, fire, flood, explosion, war, strike, embargo, government regulation, civil or military authority, acts or omissions of carriers, transmitters, providers of telecommunications or Internet services, vandals, or hackers (a "force majeure event"), time for that party's performance will be extended for the period of the delay or inability to perform due to such occurrence without liability to the other party; provided, however, that Client will not be excused from the payment of any sums of money owed by Client to Contractor after the force majeure event concludes. In addition, neither party will have the

DocuSign Envelope ID: C764E410-020D-4DE5-99C8-4C5B8EF55B29

right to claim damages or to terminate this Agreement because of a force majeure event.

22.9 Reserved.

22.10 No Third-Party Beneficiaries. Except for Contractor's suppliers and licensors, this Agreement shall not be construed to make Licensed Entities or any other person or entity, a third-party beneficiary hereof.

22.11 Counterparts. This Agreement may be signed in counterparts, all of which upon execution and delivery shall be considered an original and together shall constitute one agreement. Signed facsimile copies of this Agreement will legally bind the parties to the same extent as original documents.

22.12 Export Control. Client agrees that it will not in any form export, re-export, resell, ship, or divert or permit to be exported, re-exported, resold, shipped or diverted, directly or indirectly, any product or technical data or software furnished hereunder, or the direct product of such technical data or software, in violation of the laws, regulations, rules or orders or any jurisdiction, including applicable import and export laws.

22.13 Government Restricted Rights. The Products are provided with Restricted Rights. Use, duplication or disclosure by the Government is subject to restrictions set forth in subparagraphs (a) through (d) of the Commercial Computer Software Restricted Rights at FAR clause 52.227-19 or in subparagraph (c)(1)(ii) of the Rights in Technical Data and Computer Software clause at DFARS 252.227-7013 et seq. or its successor. The Products are proprietary data, all rights of which are reserved under the copyright laws of the United States.

[End of Agreement; signature page follows]

Docusign Envelope ID: C5A7EC25-7D81-477F-96FC-7BBAA8533A8B

NASPO VALUEPOINT MASTER AGREEMENT AMENDMENT

State Agency
Department of Personnel and Administration, State Purchasing and Contracts Office ("State")

Contractor
Toshiba America Business Solutions, Inc.

Original Contract Number
188037

Amendment Contract Number
203632

Contract Performance Beginning Date
August 1, 2024

Current Contract Expiration Date
July 31, 2027

Contract Amendment Number: 4

THE PARTIES HERETO HAVE EXECUTED THIS AMENDMENT

Each person signing this Amendment represents and warrants that he or she is duly authorized to execute this Amendment and to bind the Party authorizing his or her signature.

CONTRACTOR
Toshiba America Business Solutions, Inc.

DocuSigned by:
Larry White
A6B11ECE7C8740D...

By: Larry White President & CEO

Date: 1/20/2026

STATE OF COLORADO
Jared S. Polis, Governor
Department of Personnel and Administration
State Purchasing and Contracts Office
Tony Gherardini, Executive Director

DocuSigned by:
John Chapman
EF45AFDEB51E414...

By: John Chapman, State Purchasing Manager

Date: 1/22/2026

STATE CONTROLLER
Robert Jaros, CPA, MBA, JD

DocuSigned by:
Amanda Carroll
2A9C40DF49BF4D5...

By: Amanda Carroll Central Contract Specialist

Amendment Effective Date: 1/22/2026

In accordance with §24-30-202, C.R.S., this Amendment is not valid until signed and dated above by the State Controller or an authorized delegate.

Docusign Envelope ID: C5A7EC25-7D81-477F-96FC-7BBAA8533A8B

1. PARTIES

This Amendment (the "Amendment") to the State of Colorado Master Agreement shown on the Signature and Cover Page for this Amendment (the "Contract") is entered into by and between the Contractor, and the State.

2. TERMINOLOGY

Except as specifically modified by this Amendment, all terms used in this Amendment that are defined in the Contract shall be construed and interpreted in accordance with the Contract.

3. AMENDMENT EFFECTIVE DATE

This Amendment shall not be valid or enforceable until its Effective Date. The State shall not be bound by any provision of this Amendment before that Amendment Effective Date.

4. FACTUAL RECITALS

A. The Parties entered into the Contract effective August 1, 2024, for the provision of Multi-Function Devices and Related Software, Services and Cloud Solutions, as set forth in Contract #188037.

B. The Parties modified the Contract effective May 23, 2024, to revise a definition, as well as to revise language in Attachment 1, as set forth in Amendment #1, Contract #191680.

C. The Parties modified the Contract effective July 30, 2024, to correct the Order of Precedence language in Amendment #1, as set forth in Amendment #2, Contract #193135.

D. The Parties modified the Contract effective July 9, 2025, to allow price increases related to unforeseen economic circumstances, as set forth in Amendment #3, CMS #200487.

5. PURPOSE

The purpose of this Amendment is to modify the Contract language to allow requests for price increases due to unforeseen economic circumstances.

6. MODIFICATIONS

The Contract, and all prior amendments thereto, shall be extended through July 31, 2027.

Docusign Envelope ID: C5A7EC25-7D81-477F-96FC-7BBAA8533A8B

7. LIMITS OF EFFECT

This Amendment is incorporated by reference into the Contract, and the Contract and all prior amendments or other modifications to the Contract, if any, remain in full force and effect except as specifically modified in this Amendment. Except for the Special Provisions contained in the Contract, in the event of any conflict, inconsistency, variance, or contradiction between the provisions of this Amendment and any of the provisions of the Contract or any prior modification to the Contract, the provisions of this Amendment shall in all respects supersede, govern, and control. The provisions of this Amendment shall only supersede, govern, and control over the Special Provisions contained in the Contract to the extent that this Amendment specifically modifies those Special Provisions.

STATE OF CALIFORNIA
PARTICIPATING ADDENDUM NUMBER 7-24-70-46-08
AMENDMENT 1

Multi-Function Devices and Related Software, Services, and Cloud Solutions
Colorado NASPO ValuePoint Master Agreement Number 188037
Toshiba America Business Solutions, Inc. (Contractor)

The parties mutually agree to amend Participating Addendum 7-24-70-46-08 as follows:

1) **Section 21. GENERATIVE ARTIFICIAL INTELLIGENCE (GENAI) REPORTING** is hereby deleted and replaced with the following:

21. GENERATIVE ARTIFICIAL INTELLIGENCE (GENAI)

DEFINITIONS:
For purposes of this Section, the following terms shall be given the meaning shown below. Capitalized terms used below and not defined in this Section shall have the meaning set forth in Section 1 (Definitions) or in the text of the IT General Provisions (06/21/2022).

Artificial Intelligence (AI): an engineered or machine-based system that varies in its level of autonomy and that can, for explicit or implicit objectives, infer from the input it receives how to generate outputs that can influence physical or virtual environments (Gov Code §§ 11549.64 & 11546.45.5).

GenAI Training Data: any content, information, or data that is used to train, tune, test, or validate a GenAI, including text, images, video, audio, code, or similar types of input.

Generated Data: any output, results, content, or other data that is produced by GenAI, including but not limited to text, images, video, audio, code, or similar types of output.

Generative AI (GenAI): an AI system that can generate derived synthetic content, including text, images, video, and audio, that emulates the structure and characteristics of the system's GenAI Training Data (Gov Code §11549.64).

Hallucination: Generated Data that is nonsensical, false, or misleading, and is not based on real or existing data, but is instead produced by bias or the GenAI's extrapolation or creative interpretation of its Gen AI Training Data.

Materially Impacts: shall have the same meaning set forth in State Administrative Manual (SAM) 4986.2.

Prompt: any written, spoken, or rendered information provided as a query, command, or other form of input, to any GenAI in connection with this Contract. For avoidance of doubt, Prompt includes any input automatically detected or created by the GenAI, as well as any derivate works of a Prompt or collection of Prompts.

GENAI DISCLOSURE OBLIGATIONS:

Disclosure Obligations:

a) Contractor must immediately notify the State in writing if it: (1) intends to provide GenAI as a Deliverable to the State; or (2) intends to utilize GenAI, including GenAI from third parties, to complete all or a portion of any Deliverable that materially impacts: (i) functionality of the System, (ii) risk to the State, or (iii) Contract performance. For avoidance of doubt, the term "materially impacts" shall have the same meaning set forth in State Administrative Manual (SAM) § 4986.2 Definitions for GenAI.
b) Such notification shall be provided to the State designee identified in this Contract.
c) At the direction of the State, Contractor shall discontinue the provision to the State of any previously unreported GenAI that results in a material impact to the functionality of the System, risk to the State, or Contract performance, as determined by the State.
d) If the use of previously undisclosed GenAI is approved by the State, then Contractor will update the Deliverable description, and the Parties will amend the Contract accordingly, which may include incorporating the GenAI Special Provisions into the Contract, at no additional cost to the State.

Failure to Disclose or Discontinue GenAI Use: The State, at its sole discretion, may consider Contractor's failure to disclose or discontinue the provision or use of GenAI as described above, to constitute a material breach of Contract when such failure results in a material impact to functionality of the System, risk to the State, or Contract performance. The State is entitled to seek any and all remedies available to it under law as a result of such breach, including but not limited to termination of the contract, for default pursuant to Section 23 (Termination for Default) of the IT General Provisions (06/21/2022).

All other terms and conditions of the Participating Addendum shall remain in full force and effect.

IN WITNESS WHEREOF, the parties have executed this Amendment as of the date of execution by both parties below.

STATE OF CALIFORNIA

Department of General Services
Agency Name

Julie Matthews Digitally signed by Julie Matthews Date: 2025.08.06 11:03:49 -07'00' 8/6/2025
Authorized Signature *Date Signed*

Julie Matthews, MAU2 Supervisor
Printed Name/Title of Person Signing

707 Third Street
West Sacramento, CA 95605
Address

CONTRACTOR

Toshiba America Business Solutions, Inc.
Contractor Name

07/09/2025
Authorized Signature *Date Signed*

Michael Torcaso/Senior Vice President & CFO
Printed Name/Title of Person Signing

25530 Commercentre Drive,
Lake Forest, CA 92630
Address

STATE OF CALIFORNIA
PARTICIPATING ADDENDUM NUMBER 7-24-70-46-08

Multi-Function Devices and Related Software, Services, and Cloud Solutions
Colorado NASPO ValuePoint Master Agreement Number 188037
Toshiba America Business Solutions, Inc. (Contractor)

This Participating Addendum Number 7-24-70-46-08 is entered into between the State of California, Department of General Services (hereafter referred to as "State" or "DGS") and Toshiba America Business Solutions, Inc. (hereafter referred to as "Contractor") under the lead state of Colorado NASPO ValuePoint Master Agreement Number 188037.

1. SCOPE

A. This Participating Addendum covers the purchase of Multi-Function Devices and Related Software, Services, and Cloud Solutions under the Colorado NASPO ValuePoint Master Agreement. The Colorado NASPO ValuePoint Master Agreement is hereby incorporated by reference. Product/service categories included under this Participating Addendum are identified in Section 5 (Available Products and Services).

B. This Participating Addendum is available for use by California state agencies and local governments. A local government is defined as any city, county, city and county, district, or other local governmental body, school district or corporation empowered to expend public funds. The State Agency Listing (https://www.ca.gov/agenciesall/) provides a comprehensive list of state agencies.

C. Each local government is to make its own determination whether this Participating Addendum and the Colorado NASPO ValuePoint Master Agreement are consistent with its procurement policies and regulations.

2. TERM

A. The term of this Participating Addendum shall begin August 1, 2024, or upon signature approval by the State whichever occurs later, and will end July 31, 2026, or upon termination by the State, whichever occurs first.

B. Lead state amendments to extend the NASPO ValuePoint Master Agreement term date are not automatically incorporated into this Participating Addendum. Extension(s) to the term of this Participating Addendum will be through a written amendment upon mutual agreement between the State and the Contractor.

C. Order placement and execution shall be on or before the expiration of this Participating Addendum. However, delivery of products or completion of services may be up to 120 days after the Participating Addendum expiration date.

3. TERMS AND CONDITIONS/INCORPORATION OF DOCUMENTS

A. Terms and conditions listed below are hereby incorporated by reference and made a part of this Participating Addendum as if attached herein and shall apply to the purchase of goods or services made under this Participating Addendum.

1) General Provisions – Information Technology (DGS PD-401 IT), effective 6/21/2022
2) General Provisions – Information Technology – Cloud Computing – Software as a Service (SaaS), effective 6/21/2022
3) Cloud Computing Special Provisions for Software as a Service (SaaS), effective 03/15/2018.

B. Terms can be viewed on the DGS Procurement Division website (https://www.dgs.ca.gov/PD/Resources/Page-Content/Procurement-Division-Resources-List-Folder/Required-Language-for-Solicitations-and-Contracts).

4. ORDER OF PRECEDENCE

A. In the event of any inconsistency between the articles, attachments, or provisions which constitute this agreement, the following descending order of precedence shall apply:

1) California Participating Addendum Number 7-24-70-46-08
2) Colorado NASPO ValuePoint Master Agreement Number 188037

5. AVAILABLE PRODUCTS AND SERVICES

A. The following product and service offerings from the Colorado NASPO ValuePoint Master Agreement Number 188037 are allowed under this Participating Addendum:

Products and Services:

- Group A – Multi-Function Devices, A3 – OEM only
- Group B – Multi-Function Devices, A4 – OEM and Non-OEM
- Group D – Single-function Printers – OEM and Non-OEM
- Group E – Large/Wide Format Equipment – OEM and Non-OEM
- Group G – Software – OEM and Non-OEM
- Group H – Consumable Supplies – OEM and Non-OEM
- Group I – Managed Print Services
- Sub-Group G1 – Software Related Services
- Sub-Group D1 - Specialty Printers (3D, receipt, barcode label, card, cable) – OEM and Non-OEM

6. RESTRICTIONS/DISALLOWED PRODUCTS AND SERVICES (STATE AGENCIES ONLY)

A. The following restrictions apply to state agency purchases under this Participating Addendum:

1) Leasing and Rental

2) Products:
   a) Remanufactured Equipment
   b) Imaging equipment that is not Energy Star certified
   c) Software containing “click wrap” agreements
   d) Not Specifically Priced (NSP) items not listed or priced in the NASPO ValuePoint Master Agreement Price Lists

3) Services:
   a) Mail Room Services
   b) Network and Data Security
   c) Records Management

B. Product and service categories that are available on mandatory California statewide contracts cannot be purchased from this Participating Addendum by state agencies without an exemption. State agencies are responsible for obtaining a mandatory statewide contract exemption from DGS prior to issuing a purchase order.

7. PRICING

A. Contractor’s pricing is outlined in the Colorado NASPO ValuePoint Master Agreement Number 188037.

B. Contractor shall notify the State Contract Administrator of any amendments and pricing adjustments approved and executed by the state of Colorado.

8. AUTHORIZED RESELLERS

C. Contractor may use State-approved Authorized Resellers under this Participating Addendum for sales and service functions as defined herein.

1) Authorized Resellers must accept purchase orders and accept payment from ordering agencies for products and services offered under this Participating Addendum.

2) Authorized Resellers are responsible for sending a copy of all purchase orders and invoices to the Contractor for compliance with quarterly usage reporting and administrative fee requirements.

3) All purchase documents to Authorized Resellers shall reference the Participating Addendum Number and Contractor Name.

D. Contractor shall be responsible for successful performance and compliance with all requirements in accordance with the terms and conditions under this Participating Addendum, even if work is performed by Authorized Resellers. All State policies, guidelines, and requirements shall apply to Authorized Resellers.

E. Contractor will be the sole point of contact with regard to Participating Addendum contractual matters, reporting, and administrative fee requirements.

F. Subject to the approval of the State, Authorized Resellers may be added on a quarterly basis during the term of the Participating Addendum. Contractors shall notify the State in writing of any deleted Authorized Resellers or changes to current Authorized Resellers' information at any time.

G. Contractor will be required to submit Authorized Reseller requests, in a format specified by the State, to the State Contract Administrator for approval.

H. State-approved Authorized Resellers will be posted on the State's Cal eProcure website.

9. SUBCONTRACTORS

Subcontractors will not be used for this Participating Addendum.

10. ORDERING AGENCY RESPONSIBILITIES

A. State agency and local government use of this Participating Addendum is optional.

B. State agencies and local governments must follow the ordering procedures outlined within the User Instructions guide, administered by the State Contract Administrator, to execute orders against this Participating Addendum. User Instructions are posted on the State's Cal eProcure website.

C. All purchase orders executed under this Participating Addendum shall include the Participating Addendum Number 7-24-70-46-08.

11. STATE AGENCY BUY RECYCLED CAMPAIGN (SABRC)

A. State agencies are required to report purchases made within the eleven product categories in the California Department of Resources Recycling and Recovery's State Agency Buy Recycled Campaign (SABRC) per Public Contract Code sections 12200-12217.

B. Contractor will be required to complete and return a Postconsumer Recycled-Content Certification form (https://calrecycle.ca.gov/buyrecycled/stateagency/vendored/form74guide/) upon request by the state agency.

12. DELIVERY

A. Delivery shall occur within thirty (30) days after receipt of order, or as negotiated between ordering agency and Contractor and included in the purchase order, or as otherwise stipulated in the NASPO ValuePoint Master Agreement.

B. Free On Board (F.O.B.) Destination, freight prepaid by the Contractor, to the ordering agency's receiving point.

13. INVOICING AND PAYMENT

A. Payment will be made in accordance with General Provisions – Information Technology Paragraph 30 (Required Payment Date).

B. Invoices shall be sent to the address identified in the ordering agency's purchase order. The Participating Addendum Number and ordering agency purchase order number shall appear on each invoice for all purchases placed under this Participating Addendum.

C. Contractor will accept the State of California credit card (CAL-Card) for payment of invoices.

14. USAGE REPORTING

A. Contractor shall submit usage reports on a quarterly basis to the State Contract Administrator for all California entity purchases using the report template attached hereto as Attachment A. The report is due even when there is no activity.

B. The State Contract Administrator reserves the right to modify Attachment A and require Contractor to provide additional order information during the course of this Participating Addendum.

C. The report shall be an Excel spreadsheet transmitted electronically to the DGS Cooperatives mailbox (PDCooperatives@dgs.ca.gov).

D. Any report that does not follow the required format or that excludes information will be deemed incomplete. Contractor will be responsible for submitting corrected reports within five (5) business days of the date of written notification from the State.

E. Tax must not be included in the report, even if it is on the purchase order.

F. Reports are due for each quarter as follows:

Reporting Period	Due Date
January 1 to March 31	April 30
April 1 to June 30	July 31
July 1 to September 30	October 31
October 1 to December 31	January 31

G. Failure to meet reporting requirements and submit the reports on a timely basis shall constitute grounds for suspension of this Participating Addendum.

H. Time extensions may be approved only if all due reports have been submitted to the State.

15. ADMINISTRATIVE FEE

A. Contractor is required to remit to DGS an administrative fee amount equal to 1.25% of the sales for the quarterly reporting period less freight, taxes, returned products and credits. (For example, if the net sales for the reporting quarter totals $100,000.00, the incentive fee due to DGS would be $1,250.00.)

B. The administrative fee shall not be included as an adjustment to Contractor's NASPO ValuePoint Master Agreement pricing.

C. The administrative fee shall not be invoiced or charged to the ordering agency.

D. Payment of the administrative fee is due irrespective of payment status from ordering agencies.

E. Payment may be made in the form of an electronic payment using the LPA Payment Portal website (https://www.dgs.ca.gov/PD/Services/Page-Content/Procurement-Division-Services-List-Folder/Access-LPA-Payment-Portal) or by submitting a check payable to the State of California, Department of General Services.

F. Administrative fee payments made by check must include the Participating Addendum Number on the check and be submitted to the following address:

Department of General Services
Procurement Division
Attn: MAPS Payment Processing
707 Third Street, 2nd Floor
West Sacramento, CA 95605

G. Administrative fee payments are due for each quarter as follows:

Reporting Period	Due Date
January 1 to March 31	April 30
April 1 to June 30	July 31
July 1 to September 30	October 31
October 1 to December 31	January 31

H. Failure to meet administrative fee requirements and submit fees on a timely basis shall constitute grounds for suspension of this Participating Addendum.

16. CONTRACT MANAGEMENT

A. The primary Contractor Contract Manager for this Participating Addendum shall be as follows:

Contractor	Contract Manager
Name:	Jeff Ballard
Phone:	(949) 462-6327
Email	Jeff.ballard@tabs.toshiba.com
Address:	Toshiba America Business Solutions, Inc. Attn: Jeff Ballard 25530 Commercentre Drive Lake Forest, CA 92630

B. The State Contract Administrator for this Participating Addendum shall be as follows:

State	Contract Administrator
Name:	Yolanda Tutt
Phone:	(279) 946-8401
Email	yolanda.tutt@dgs.ca.gov
Address:	State of California Department of General Services Procurement Division 707 Third Street, 2nd Floor, MS 2-202 West Sacramento, CA 95605

C. Should the contact information for either party change, the party will provide written notice with updated information no later than ten (10) business days after the change.

17. TERMINATION OF AGREEMENT

The State may terminate this Participating Addendum at any time upon thirty (30) days prior written notice to the Contractor. Upon termination or other expiration of this Participating Addendum, each party will assist the other party in orderly termination of the Participating Addendum and the transfer of all assets, tangible, and intangible, as may facilitate the orderly, non-disrupted business continuation of each party. This provision shall not relieve the Contractor of the obligation to perform under any purchase order or other similar ordering document executed prior to the termination becoming effective.

18. AMENDMENT

No amendment or variation of the terms of this Participating Addendum shall be valid unless made in writing, signed by the parties, and approved as required. No oral understanding or agreement not incorporated in the Participating Addendum is binding on any of the parties.

19. NEWS RELEASES

Unless otherwise exempted, news releases, endorsements, advertising, and social media content pertaining to this Participating Addendum shall not be made without prior written approval from the State.

20. EXECUTIVE ORDER N-6-22 – RUSSIA SANCTIONS

On March 4, 2022, Governor Gavin Newsom issued Executive Order N-6-22 (the EO) regarding Economic Sanctions against Russia and Russian entities and individuals. “Economic Sanctions” refers to sanctions imposed by the U.S. government in response to Russia’s actions in Ukraine, as well as any sanctions imposed under state law. The EO directs state agencies to terminate contracts with, and to refrain from entering any new contracts with, individuals or entities that are determined to be a target of Economic Sanctions. Accordingly, should the State determine Contractor is a target of Economic Sanctions or is conducting prohibited transactions with sanctioned individuals or entities, that shall be grounds for termination of this Participating Addendum. The State shall provide Contractor advance written notice of such termination, allowing Contractor at least thirty (30) calendar days to provide a written response. Termination shall be at the sole discretion of the State.

21. GENERATIVE ARTIFICIAL INTELLIGENCE (GENAI) REPORTING

The State of California seeks to realize the potential benefits of GenAI, through the development and deployment of GenAI tools, while balancing the risks of these new technologies.

Upon request by an ordering agency, Contractor must complete a GenAI Reporting and Fact Sheet (STD 1000) to identify if their solution or service includes, or makes available, any GenAI including, GenAI from third parties or subcontractors.

During the term of the contract, Contractor must notify the State in writing if their services or any work under this contract includes, or makes available, any previously unreported GenAI technology, including GenAI from third parties or subcontractors. Contractor shall immediately complete the GenAI Reporting and Factsheet (STD 1000) to notify the State of any new or previously unreported GenAI technology.

At the direction of the State, Contractor shall discontinue the use of any new or previously undisclosed GenAI technology that materially impacts functionality, risk or contract performance, until use of such GenAI technology has been approved by the State.

Failure to disclose GenAI use to the State and submit the GenAI Reporting and Factsheet (STD 1000) may be considered a breach of the contract by the State at its sole discretion and the State may consider such failure to disclose GenAI and/or failure to submit the GenAI Reporting and Factsheet (STD 1000) as grounds for the immediate termination of the contract. The State is entitled to seek any and all relief to which it may be entitled to as a result of such non-disclosure.

The State reserves the right to amend the contract, without additional cost, to incorporate GenAI Special Provisions into the contract at its sole discretion and/or terminate any contract that presents an unacceptable level of risk to the State.

If Contractor identifies GenAI in their solution, a copy of the STD 1000 must be submitted to the State Contract Administrator.

22. AGREEMENT

A. This Participating Addendum and the Master Agreement together with its exhibits and/or amendments, set forth the entire agreement between the parties with respect to the subject matter of all previous communications, representations, or agreements, whether oral or written, with respect to the subject matter hereof. Terms and conditions inconsistent with, contrary or in addition to the terms and conditions of this Participating Addendum and the Master Agreement, together with its exhibits and/or amendments, shall not be added to or incorporated into this Participating Addendum or the Master Agreement and its exhibits and/or amendments, by any subsequent purchase order or otherwise, and any such attempts to add or incorporate such terms and conditions are hereby rejected. The terms and conditions of this Participating Addendum and the Master Agreement and its exhibits and/or amendments shall prevail and govern in the case of any such inconsistent or additional terms.

B. By signing this Participating Addendum, Contractor agrees to offer the same products/services available on the Colorado NASPO ValuePoint Master Agreement Number 188037 at prices equal to or lower than the prices on that agreement.

IN WITNESS WHEREOF, the parties have executed this Participating Addendum as of the date of execution by both parties below.

STATE OF CALIFORNIA	CONTRACTOR
Department of General Services	Toshiba America Business Solutions, Inc.
Agency Name	*Contractor Name*
Julie Matthews — Digitally signed by Julie Matthews Date: 2024.07.31 08:18:43 -07'00' — 7/31/2024	7/29/2024
Authorized Signature *Date Signed*	*Authorized Signature* *Date Signed*
Julie Matthews, MAU2 Supervisor	Larry White, President and CEO
Printed Name/Title of Person Signing	*Printed Name/Title of Person Signing*
707 Third Street West Sacramento, CA 95605	25530 Commercentre Dr., Lake Forest, CA 92630
Address	*Address*

BURBANK UNIFIED SCHOOL DISTRICT
Purchasing Services

REPORT TO THE BOARD

TO:	Members of the Board of Education
FROM :	Jason Hasty, Interim Assistant Superintendent of Business Services
PREPARED BY:	David Gerharter, Director of Purchasing, Warehouse and Reprographics
SUBMITTED BY:	Terri Ramirez-Adams, Senior Administrative Assistant
DATE:	May 7, 2026
SUBJECT:	Approval of Maintenance Agreement with Circle MSP

Background:

Burbank Unified School District currently contracts with Sharp Business Systems for the service and maintenance of multifunction copiers and printers across all District sites. The existing agreement expires on June 30, 2026.

The agreement was initially approved on August 1, 2019 and an extension was approved on June 20, 2024.

Discussion:

Cooperative Purchasing Agreements allow the District to utilize contracts that have already been competitively solicited, publicly advertised, evaluated, and awarded by a lead public agency. This approach significantly reduces administrative workload, streamlines procurement timelines, and maintains full compliance with relevant bidding requirements under:

- **BUSD Board Policy BP 3311 – Bids**, which requires competitive bidding for applicable purchases and allows use of piggyback/cooperative contracts when in the District's best interest
- **California Public Contract Code § 20111**, which mandates competitive bidding for school district purchases above statutory thresholds and requires award to the lowest responsible bidder unless a lawful exemption applies

After evaluating multiple contract options through various manufacturers and resellers, Administrative Services has recommended a lease contract for replacement copiers and printers through Circle II and Wells Fargo Vendor Financial Services, LLC, utilizing the NASPO Master Agreement Number 188037 cooperative purchasing agreement.

As an authorized reseller under this Master Agreement, Circle MSP is qualified to provide service and maintenance of all copiers, multi-function printers and single function printers across the district at the following rates for a term of 60 months:

Toshiba copiers and Brother printers: $0.0039 per B&W page, $0.045 per color page, with a maximum annual increase of 8.0%.

HP single-function printers: $0.012 per B&W page, with a maximum annual increase of 5.0%.

All annual increases are subject to review and justification through a Quarterly Business Review (QBR) to be conducted each year in accordance with the Statement of Work.

Fiscal Impact:

Based on the rates listed above rated and usage projections, the service and maintenance expense is estimated not to exceed $650,000.00 over the life of the agreement (60 months).

Recommendation:

Administrative Services recommends that the Board of Education approve an agreement between Burbank Unified School District and Circle MSP to provide service and maintenance for copiers and printers for 60 months, effective July 1, 2026 through June 30, 2031, not to exceed $650,000.00 (01.0-00000.0-00000-72000-5631-0000000) and that the authority to sign the agreement be exercised pursuant to BUSD-AR 3314, as presented.

Circle
A M&S Technology Group Company

Circle
32 Waterworks Way
Irvine, CA 92618

Service Agreement

Date	
Customer #	BU00
Representative	**Philip Vinceri**

Ship To		
Burbank Unified School District		
1900 West Olive Avenue		
Burbank, CA 91506		
Contact:	David Gerharter	
Meter Contact:	0	
Meter Method:		
E-Mail	0	

Bill To
BURBANK UNIFIED SCHOOL DISTRICT
1900 West Olive Avenue
Burbank, CA 91506

Installation and Service Agreement Options

Appropriate categories must be initialed by the client in the box to the left of the option.

Maintenance Type:	0
Contract Length (months):	60
Contract Start Date:	

	Base Rate	Base Allowance	Base Billed	Overage	Overage Billed
B/W	0.0039	0			
Color	0.045	0			
B/W Printer (current fleet)	0.012	0			
Color Printer	0.045	0			

If wide-format, billing is per Square foot / Linear Foot

Make/Model	Serial Number	ID Number	B/W Start Meter	Color Start Meter
	0			
	0			
	0			
	0			
	0			
	0			
	0			
	0			
	0			
	0			
	0			
	0			
	0			
	0			
	0			

By executing this agreement, I acknowledge that I have read and understand this agreement and I certify that I am authorized to execute this agreement on behalf of customer. Authorized signature acknowledges terms / conditions and expiration dates or meter readings. The terms and conditions on the face and reverse side of this agreement correctly set fourth the entire agreement between parties.

Customer Acceptance			*Dealer Representative*	
Authorized Signature/Date	**Print Name**	**Title**	**Signature**	**Date**

Terms and Conditions

1. Acceptance by Dealer of contract: References made to "Dealer" shall mean Circle. Machines sold by Dealer are eligible for a service contract immediately upon the expiration of the warranty period. If service contract is requested at any other time, machine must first be inspected by Dealer. Customer shall bear any and all costs necessary to bring machine up to specifications. Invoices shall be due and payable by the customer for all equipment, accessories, supplies or maintenance purchased pursuant to this agreement (The "Goods and Services"), within the time period specified on the front side of this document. Customer shall pay all applicable sales tax, installation and freight charges. If customer fails to make any payment when due, there will be a service charge of five percent (5%) of the total amount due, together with an interest rate of one and one-half percent (1 ½%) of the total amount due or the maximum legal rate allowed by law, whichever is less. Customer shall pay a $20.00 service charge on any and all returned checks. Customer shall pay all collection expenses incurred by Dealer, including but not limited to, court, attorneys and accounting fees, if required.

2. Taxes. Customer shall be responsible for all sales tax, use tax or other taxes (including without limitations personal property taxes assessable on the equipment) and fees charged relative to this agreement. Customer agrees to reimburse Dealer for all amounts paid or payable by Dealer in discharge of the forgoing taxes. Customer shall not be responsible for taxes based on Dealer's gross or net income.

3. Default. If Customer is in default of any term or condition, seller may cancel this agreement in whole or part at any time upon ten- (10) day's written notice. If seller cancels the agreement the agreement will be prorated based upon the unused portion of the term of the agreement. Any amount due to seller will be invoiced and is payable upon receipt. Any amounts due to the customer will be applied to any unpaid invoices prior to refund.

4. Business Purpose. Customer warrants and represents that the goods will be used for business purposes, and not for personal, family, or household purposes.

5. Availability. Customer agrees that the goods are subject to availability and seller reserves the right to substitute models of like specification if practicable. Seller may cancel any order or any part of an order without cause at any time and without penalty, and seller's sole obligation shall be to return any down payment paid by customer. If parts become unavailable for discontinued equipment, seller reserves the right to delete said equipment in accordance with the terms of this agreement.

6. Delivery and Installation. Seller shall use its standard packaging. Seller shall choose the method of delivery; seller reserves the right to deliver the goods in installments. Customer will pay an invoice when due, without regard to delivery or non-delivery of subsequent installments. Delay in delivery of any installments shall not relieve customer of its obligations to accept remaining installments. Equipment shall be installed in accordance with manufacture's specification. At customers sole cost and expense, customer shall insure that equipment is placed in an environment that conforms with the manufacturer's specifications and requirements and will bear all costs and expenses for any additional necessities required for installation such as telephone and electrical wiring, remodeling, and noise and power filters. Any electrical work external to the equipment (i.e. associated peripheral equipment, power, transmission and phone lines) and equipment line cord is not covered by this agreement.

7. Title, Identification and risk of loss. The goods shall be identified to the contract, and risk of loss shall pass to customer when the goods are placed in the hands of the carrier. For goods purchased outright, title will pass to customer upon payment in full. For goods purchased on an installment payment basis title will pass to customer on the installation date.

8. Security Interest. Seller expressly reserves a security interest in the goods until payment in full has been collected and customer agrees to notify seller prior to relocation of any goods for which seller has a security interest. Customer shall execute any other document, including a financing statement or other document similar to the UCC-1, necessary to protect seller' security interest in the goods. Customer authorizes seller to file at customers expense any financing statement relating to the goods without customers signature except where prohibited by law.

9. Warranties. Seller warrants and represents that the goods and services of all new copiers and facsimiles sold by Dealer will conform to the description and specification and be free from defects in material and workmanship for ninety- (90) days from the date of this purchase. Within this period Dealer will repair said equipment without charge for parts and labor. This ninety-(90) day period will not cover supplies normally covered under the Dealer maintenance agreement unless the contract for the maintenance agreement is signed at the point of sale. A $165.00 per hour fee will apply to all service calls regardless of service needed outside of the maintenance agreement with an upfront one-(1) hour minimum.

10. Seller. Makes no warranties whatsoever express or implied with regard to the service, the software included with the product or its installation and maintenance, and expressly excludes all implied warranties of merchantability and fitness for a particular purpose.

11. Sellers. Liability is limited to the cost of purchased products by the customer from seller. Seller shall not be liable for any special damages, including but not limited to damages due to loss of data or information of any kind, loss of or damage to revenue, profits or goodwill, damages due to interruption of business, damage to customer's computers or networks, even if the seller has been advised of the possibility of such damages.

12. Seller. Makes no other express or implied warranties and all other warranties are specifically excluded, including any warranty as to merchantability or fitness for particular or special purposes. Seller shall under no circumstances be liable for any special, exemplary, punitive, incidental or consequential damages regardless of the cause.

13. Remedy Limitations. The goods shall not be returned to seller for credit without seller's written consent. No credit will be given after fourteen-(14) days from the date of the invoice. All returns for credit within fourteen-(14) days are subject to up to a 20% restocking fee. All costs of return shall be the responsibility of the customer. Customer's exclusive remedy for breach of warranty shall be replacement or repair of the item or non-conforming parts at the option of seller. Customer expressly waives its rights to special, consequential, exemplary, and incidental or punitive damages.

14. Warranty Service. To obtain warranty service, customer must (1) call seller's Customer Service at (800)-635-8558. Customer should package all goods to be returned in manner adequate for pickup or shipping, and should properly insure the goods when shipped. Seller shall not be responsible for damage to the goods in transit. The goods will be returned to and from customer by method and carrier chosen by seller. A $165.00 per hour fee will apply to all service calls regardless of service needed outside of the maintenance agreement with an upfront one-(1) hour minimum.

15. Renewal/Termination. This agreement shall have an initial term of five (5) years, with two (2) optional one-year renewal terms. Dealer may adjust rates annually; however, any annual increase shall not exceed eight percent (8%). Rates applicable to the current fleet of HP desktop printers shall be subject to a reduced annual increase cap of five percent (5%). Dealer reserves the right to terminate this agreement at its discretion upon thirty (30) days' prior written notice.

16. Remedial Maintenance. During the term of this agreement Dealer agrees to perform the maintenance and repair that will keep the equipment in good working order and condition, normal wear and tear included. If Dealer is notified by a customer during the term of the agreement that the equipment is not in good working condition, Dealer will, during Dealer's established service hours make necessary adjustments and repairs including replacement of parts, or replace the equipment versus repair at Dealer's option. Dealer's service hours are 8:00am to 5:00pm Monday thru Friday Pacific Time, excluding holidays. Dealer may from time to time adjust these hours as may be required in the course of business, at which time the customer will be advised. Service at times other than Dealer established hours may be furnished on "as available basis" at published rates then in effect. Replacement parts may have been used and/or reconditioned. Parts that have been replaced will remain the property of Dealer.

17. Dealer will replace without charge, parts which have been broken or worn through normal use and are necessary to machine servicing and maintenance adjustments, including consumables such as toner, developer, drums and fuser rollers within the limits of their suggested yield. (Paper and Staples are excluded). Additional toner requested beyond 125% of manufacturer's specifications is subject to additional charges.

18. Customer Responsibility. Customer will be responsible for the daily care and cleaning of the top glass, dusting equipment, replenishing toner, replacing disposal tank, clearing jams, etc., (where applicable). It is the customer's responsibility to provide a key operator who shall be responsible for normal operator functions listed above. An image is defined as a standard 8 ½ x 11 single sided print.

19. Customer agrees that Dealer will not be held accountable to make adjustments, repairs or replacements if Dealer is not provided reasonable access to the equipment.

20. Assignment. This agreement shall not be assigned by customer without seller's express written consent. In the event that seller assigns any of its obligations under this agreement, seller shall remain primarily responsible to perform those obligations. Any claim or defense customer may have relating to those obligations must be asserted on or against seller and not its assignee.

21. Notices. All notices required to be given under this agreement shall be in writing and shall be sent by U.S. first class mail to the parties at the address listed on the front of this agreement.

22. Indemnification. Customer shall bear all risk of theft, loss or damage not caused by seller's employees or agents, to all goods installed under this agreement. Customer agrees to indemnify, defend and hold harmless seller, its officers, directors, employees and agents from all loss, liability, claims or expenses (including reasonable attorneys' fees) arising or customers use of the goods, including but not limited to liabilities arising from bodily injury, including death, or property damage to any person, unless caused solely as the result of a negligent or intentional act or omission by seller.

23. Seller shall indemnify customer against any costs, losses, damages or liability incurred by customer as the result of any third party's claim of infringement of its patent, copyright trademark which claim arises out of the use of the product by customer. Customer shall immediately notify seller in writing of such claim or demand. Seller shall have the sole right to control, and defense, thereof, and customer agrees that it will not settle any such claim against itself without the prior written consent of seller. Provided however, that seller shall not indemnify customer with respect to any claim relating to product(s) which is/are manufactured according to customers instructions, or modified by customer or combined with other non-seller products, equipment, systems and/or processes, Failure of customer to provide timely notification of claim to seller shall relieve seller of its obligation to indemnify customer.

24. Force Majeure. Neither party shall be responsible for delays or failure in performance of this agreement (other than failure to make payment) to the extent that such party was hindered in its performance by act of god, abuse, misuse, excess of voltage or power surges, repairs other than those provided by Dealer authorized personnel, civil commotion, labor dispute, or any other occurrence beyond its reasonable control.

25. Severability. If any provision of this agreement shall be unlawful, void or for any reason unenforceable, then that provision shall be deemed severable form this agreement and shall not affect the validity and enforceability of the remaining provisions of this agreement.

26. Applicable Law. This agreement shall be governed by the laws of the State of California and the Uniform Commercial Code as adopted therein without regard to choice of law principles. In the event of litigation or other proceedings by seller to enforce or defend any term or provision of this agreement customer agrees to pay all costs and expenses sustained by seller, including but not limited to, reasonable attorney's fees.

27. Seller's Agents. Customer acknowledges that it has been advised that no agent, employee, or representative of seller has any authority to bind seller to any affirmation promise, representation, or warranty concerning any goods and services, and unless such affirmation, promise, representation, or warranty is specifically set forth in this agreement it does not form a basis of this bargain and shall not be enforceable against seller.

28. Customer Documentation. Customer agrees that any purchase order or other documentation issued to seller covering the goods or services is issued for purposes authorization and customer's internal use only, and any conditions contained therein shall not modify or add to the terms and conditions of this agreement.

29. Acceptance. This agreement and its terms and conditions shall not take effect until accepted and executed by an authorized seller representative at sellers offices in the State of California.

30. Entire Agreement. This instrument, and any attachments hereto, is the entire agreement between customer and seller and supersedes any proposal or prior agreement, oral written, and any other communications relating to the subject matter of this agreement. The terms and conditions of this agreement shall supersede any terms and conditions which may be contained on any purchase order or other document which may be issued by customer. This agreement shall not be binding unless and until accepted and approved by authorized seller representative.

DocuSign Envelope ID: C764E410-020D-4DE5-99C8-4C5B8EF55B29

NASPO ValuePoint Master Agreement Terms and Conditions

For Multi-Function Devices and Related Software, Services and Cloud Solutions

A Contract for the NASPO ValuePoint Cooperative Purchasing Program
Acting by and through the **State of Colorado** (Lead State)

Department of Personnel & Administration
State Purchasing & Contracts Office
1525 Sherman Street, 5th Floor
Denver, Co 80203

And

Toshiba America Business Solutions, Inc.
25530 Commercentre Drive
Lake Forest, CA 92630

Master Agreement Number: 188037

DocuSign Envelope ID: C764E410-020D-4DE5-99C8-4C5B8EF55B29

Contents

MASTER AGREEMENT TERMS AND CONDITIONS 4
I. Definitions 4
II. Parties and Term of the Master Agreement 8
III. Order of Precedence 9
IV. Participants and Scope 9
V. NASPO ValuePoint Provisions 11
VI. Pricing, Payment & Leasing 14
VII. Ordering 15
VIII. Shipping and Delivery 18
IX. Inspection and Acceptance 19
X. Warranty 20
XI. Equipment Title 22
XII. Indemnification 22
XIII. Insurance 23
XIV. General Provisions 25
SIGNATURE PAGE 31
EXHIBIT A – STATEMENT OF WORK 32
I. Product Overview 32
II. Master Agreement Deliverables 33
III. Purchase and Lease Programs 43
IV. Contractor Responsibilities and Tasks 49
EXHIBIT B – SAMPLE D&A CERTIFICATE 58
EXHIBIT C – AUTHORIZED DEALER FORM 59
EXHIBIT D – AUTHORIZED DEALERS BY STATE 60
ATTACHMENT 1 – TOSHIBA LEASE AGREEMENT TERMS AND CONDITIONS 61
ATTACHMENT 2 – TOSHIBA SERVICE LEVEL AGREEMENT 65
ATTACHMENT 3 – TOSHIBA MAINTENANCE AGREEMENT 67
ATTACHMENT 4 – TOSHIBA $1 BUYOUT LEASE ADDENDUM 69
ATTACHMENT 5 – TOSHIBA LEASE ORDER FORM 70
ATTACHMENT 6 – TOSHIBA LEASE ORDER FORM SCHEDULE 71
ATTACHMENT 7 – TOSHIBA AMENDMENT TO OPT OUT 72
ATTACHMENT 8 – TOSHIBA OPINION OF COUNSEL 73
ATTACHMENT 9 – TOSHIBA M&S ACTIVATION FOR PURCHASED EQUIPMENT 74
ATTACHMENT 10 – TOSHIBA SAMPLE MPS STATEMENT OF WORK 76
ATTACHMENT 11 – TOSHIBA ASSET RELOCATION REQUEST FORM 80
ATTACHMENT 12 – TOSHIBA FLEET MONITORING TOOL SITE SURVEY 81

DocuSign Envelope ID: C764E410-020D-4DE5-99C8-4C5B8EF55B29

ATTACHMENT 13 – TOSHIBA EMETERS ONLINE INFORMATION AND INSTRUCTIONS.....84
ATTACHMENT 14 – TOSHIBA STATEMENT OF SERVICES.....85
ATTACHMENT 15 – TOSHIBA SAAS STATEMENT OF SERVICES 90
ATTACHMENT 16 – TOSHIBA ON-PREMISES STATEMENT OF SERVICES.....92
ATTACHMENT 17 – TOSHIBA HYBRID STATEMENT OF SERVICES 95
ATTACHMENT 18 – TOSHIBA MASTER SOFTWARE AND SERVICES AGREEMENT 97

MASTER AGREEMENT TERMS AND CONDITIONS

I. Definitions

1.1 **A3 MFD** - A Multi-function Device which is designed to handle letter, legal, ledger and some smaller paper sizes, such as postcards and envelopes.

1.2 **A4 MFD –** A Multi-function Device which is designed to handle letter, legal and some smaller paper sizes, such as postcards and envelopes. Ledger size paper is NOT an option on this Device.

1.3 **Acceptance** - A written notice from a Purchasing Entity to Contractor advising Contractor that the Device has passed its Acceptance Testing. Acceptance of a Product for which Acceptance Testing is not required shall occur following the completion of delivery, installation, if required, and a reasonable time for inspection of the Product, unless the Purchasing Entity provides a written notice of rejection to Contractor, as set forth in **section IX** of this Master Agreement.

1.4 **Accessory** – A compatible item that is added to the Base Unit to enhance its capabilities and functions.

1.5 **Attachment** – Contractor's Supplemental Documents which consist of the following:

1.5.1 Attachment 1 – Toshiba Lease Agreement Terms and Conditions

1.5.2 Attachment 2 – Toshiba Service Level Agreement

1.5.3 Attachment 3 – Toshiba Maintenance Agreement

1.5.4 Attachment 4 – Toshiba $1 Buyout Lease Addendum

1.5.5 Attachment 5 – Toshiba Lease Order Form

1.5.6 Attachment 6 – Toshiba Lease Order Form Schedule

1.5.7 Attachment 7 – Toshiba Amendment to Opt Out

1.5.8 Attachment 8 – Toshiba Opinion of Counsel

1.5.9 Attachment 9 – Toshiba M&S Activation for Purchased Equipment

1.5.10 Attachment 10 – Toshiba Sample MPS Statement of Work

1.5.11 Attachment 11 – Toshiba Asset Relocation Request Form

1.5.12 Attachment 12 – Toshiba Fleet Monitoring Tool Site Survey

1.5.13 Attachment 13 – Toshiba eMeters Online Information and Instructions

1.5.14 Attachment 14 – Toshiba Statement of Services

1.5.15 Attachment 15 – Toshiba SaaS Statement of Services

1.5.16 Attachment 16 – Toshiba On-Premises Statement of Services

1.5.17 Attachment 17 – Toshiba Hybrid Statement of Services

1.5.18 Attachment 18 – Toshiba Master Software and Services Agreement

1.6 **Authorized Dealer** – The Manufacturer's authorized sales and Service center (also known as a Dealer, Distributor, or Partner) that must be certified by the Manufacturer to sell the Manufacturer's Products and perform machine installation and maintenance on Devices offered by the Manufacturer. A Purchasing Entity must be able to, at a minimum, visit the

DocuSign Envelope ID: C764E410-020D-4DE5-99C8-4C5B8EF55B29

sales and service center to view and test Device.

1.7 **Base Unit** - The copier, printer, Scanner, Large/Wide Format and Production Devices that include all standard Accessories and parts and excludes optional Accessories and/or software.

1.8 **Blended Rate** - A rate that is derived by taking the b&w and color cost per click rates on one or more Devices and calculating one rate that a customer will be billed for all copies, regardless of Device type and b&w or color output. Allows for simplicity when billing copies run.

1.9 **Bronze Standard** - Devices which meet less than 50% of the 28 optional EPEAT criteria.

1.10 **Business Day –** Any day other than Saturday, Sunday, or a legal holiday.

1.11 **Buyout to Keep** - The early termination option on an FMV or Capital Lease that involves the acquisition of the Device by the Purchasing Entity, and consists of any current and past due amount, plus the remaining stream of Device Payments.

1.12 **Buyout to Return** - The early termination option on an FMV, Capital or Straight Lease that involves the return of the Device by the Purchasing Entity to Contractor, in good working condition (ordinary wear and tear excepted), and consists of any current and past due amounts, plus the remaining stream of Device Payments.

1.13 **Capital Lease** - For the purposes of this Master Agreement, a Capital Lease shall also be referred to as a $1 Buyout Lease and title of the Device will automatically pass from the Contractor to the Purchasing Entity at the end of the Initial Lease Term, and the Purchasing Entity will not be subject to additional payments in order to assume ownership. However, it will be at the discretion of the Participating State or Entity as to whether other criteria will also be considered, such as a bargain purchase option, a lease term longer than 75% of the estimated economic life of the Device, or the present value of the lease payments is greater than 90% of the fair market value of the Device at the beginning of the Initial Lease Term, or any other legal requirements relating to a Capital Lease.

1.14 **Ceiling Pricing** - Pricing that is established as a “not-to-exceed” amount; the maximum price Contractor may charge for Products, Services, and Supplies.

1.15 **Contractor** - A party to this Master Agreement, whether a person or entity, that delivers goods or performs services under the terms set forth in this Master Agreement.

1.16 **Coterminous** - Two or more leases that end at the same time. The original lease payment is modified to reflect the addition of a new Device or Accessory. The original term of the lease is not modified as a result of a Coterminous addition.

1.17 **Deliverable** - A Product, Service, solution, result, labor, or other effort being sought through this RFP.

1.18 **Device** - The Base Unit, either with or without optional Accessories and/or software. May also be referred to as “Equipment.”

1.19 **Device Downtime** - The period of time that a Device is not operational and is waiting for Service to be completed.

1.20 **Device Payment** - The Device portion of the payment, less any Service, Supplies, and maintenance.

1.21 **Device Trade-In** - An agreed upon transaction between the Purchasing Entity and Contractor, in which Contractor takes ownership of Purchasing Entity’s owned Device, often for a discounted amount.

DocuSign Envelope ID: C764E410-020D-4DE5-99C8-4C5B8EF55B29

1.22 **Device Upgrade or Downgrade** - A replacement of the Purchasing Entity's existing leased Device, with a different Device, of either greater or lesser value. A new lease is then originated for the new Device, with the remaining lease payments on the old Device wrapped into it. The old lease is closed out, and the Device is returned to Contractor.

1.23 **Electronic Product Environmental Assessment Tool (EPEAT)** - A tool which evaluates and selects Device according to a list of preferred environmental attributes. EPEAT registered means Devices meet the 1680.2 IEEE Standard for Environmental Assessment of Imaging Device, as amended.

1.24 **Embedded Software** - One or more software applications which permanently reside on a computing Device.

1.25 **Energy Star** - The U.S. Environmental Protection Agency's standard for energy efficiency.

1.26 **Fair Market Value (FMV) Lease** - A lease in which the Purchasing Entity can either 1) Take title to the Device at the end of the Initial Lease Term by paying the residual value to Contractor, 2) Enter into a Renewal Term for the Device, or 3) Return the Device to Contractor at the end of the Initial Lease Term.

1.27 **Free on Board (FOB) Destination** - Contractor is responsible for transportation and handling charges and the sale does not occur until the Products arrive at the Purchasing Entity's specified location.

1.28 **Group** - The classification for the different types of Devices solicited in this RFP. Groups are determined by the Devices primary functions and/or capabilities.

1.29 **Initial Lease Term** - The length of time (i.e. 12, 18, 24, 36, 48, or 60 months) that a Purchasing Entity enters into a lease agreement.

1.30 **Intellectual Property** - Any and all patents, copyrights, service marks, trademarks, trade secrets, trade names, patentable inventions, or other similar proprietary rights, in tangible or intangible form, and all rights, title, and interest therein.

1.31 **Large/Wide Format Equipment** - A Device that prints on a large paper via a variety of output options.

1.32 **Lead State -** The State centrally administering any resulting Master Agreement(s) who is a party to this Master Agreement.

1.33 **Legacy Device** – A Device that was purchased or leased, either under a prior NASPO ValuePoint or WSCA Master Agreement, another program, or via any other means.

1.34 **Maintenance Agreement** - An agreement in which the Contractor provides monthly Service, parts, Supplies, and Preventative Maintenance on purchased or leased Devices.

1.35 **Managed Print Services (MPS)** - The management, service, and support of the Purchasing Entity's entire enterprise and output infrastructure of printed materials, with the objective of creating a solution that improves the print process and reduces the expense of printed material.

1.36 **Manufacturer** - A company that, as its primary business function, designs, assembles, and owns the trademark/patent and markets a Device. Also referred to as Contractor.

1.37 **Manufacturer's Suggested Retail Price (MSRP)** - The list price or recommended retail price of a Product in which the Manufacturer recommends that the retailer sell the Product.

1.38 **Master Agreement** - The underlying agreement executed by and between the Lead State, acting in cooperation with NASPO ValuePoint, and the Contractor, as now or hereafter amended.

DocuSign Envelope ID: C764E410-020D-4DE5-99C8-4C5B8EF55B29

1.39 **Multi-function Device (MFD)** - A Device which incorporates the functionality of multiple Devices into one, such as print, fax, copy and scan. Each feature can work independently of the other.

1.40 **NASPO ValuePoint** - A division of the National Association of State Procurement Officials ("NASPO"), a 501(c)(3) corporation. NASPO ValuePoint facilitates administration of the NASPO cooperative group contracting consortium of state chief procurement officials for the benefit of state departments, institutions, agencies, and political subdivisions and other eligible entities (i.e., colleges, school districts, counties, cities, some nonprofit organizations, etc.) for all states, the District of Columbia, and territories of the United States. NASPO ValuePoint is identified in the Master Agreement as the recipient of reports and may perform contract administration functions relating to collecting and receiving reports, as well as other contract administration functions as assigned by the Lead State.

1.41 **Newly Manufactured** - Devices that have not been Refurbished, Remanufactured, rented, leased, sold, or used in a demonstration, and are currently being marketed by the Manufacturer.

1.42 **Normal Business Hours** – Defined as the hours between 8AM and 5PM, Monday through Friday, holidays excluded.

1.43 **Not Specifically Priced (NSP)** - NSP items enhance or compliment the Device but are not listed in the Master Agreement Price List(s). NSP's may include Coin-Op Equipment, empowering software etc.

1.44 **OEM** – The Original Equipment Manufacturer.

1.45 **Order** - Any type of encumbrance document or commitment voucher, including, but not limited to, a purchase order, contract, MPS statement of work, Maintenance Agreement, lease agreement, etc. used by a Purchasing Entity to order the Products and Services.

1.46 **Participating Addendum –** A bilateral agreement executed by a Contractor and a Participating Entity incorporating this Master Agreement and any additional Participating Entity-specific language or other requirements (*e.g.*, ordering procedures specific to the Participating Entity, entity-specific terms and conditions, etc.).

1.47 **Participating Entity -** A state (as well as the District of Columbia and US territories), city, county, district, other political subdivision of a State, or a nonprofit organization under the laws of some states properly authorized to enter into a Participating Addendum, that has executed a Participating Addendum.

1.48 **Participating State** - A state that has executed a Participating Addendum or has indicated an intent to execute a Participating Addendum.

1.49 **Power Filter** - An electronic filter which is placed between an external power line and a Device for the purpose of removing frequencies or electromagnetic interference.

1.50 **Preventative Maintenance** - The servicing of a Device for the purpose of maintaining a satisfactory operating condition by providing systematic inspection, detection, and correction of failures either before they occur or before they develop into major defects.

1.51 **Private Label** - Devices that are manufactured by one company and sold under a retailer's brand name.

1.52 **Product** – Devices, Accessories, parts, software, and/or Supplies provided by Contractor pursuant to the Master Agreement.

1.53 **Published Price** – The price that is posted on the Manufacturer's website or in their pricing literature (e.g. not the Master Agreement contract price).

DocuSign Envelope ID: C764E410-020D-4DE5-99C8-4C5B8EF55B29

1.54 **Purchasing Entity** - A state (as well as the District of Columbia and US territories), city, county, district, other political subdivision of a State, or a nonprofit organization under the laws of some states if authorized by a Participating Addendum, that issues a Purchase Order against the Master Agreement and becomes financially committed to the purchase.

1.55 **Refurbished** - A Device which has received extensive maintenance and/or minor repair, including the replacement of all standard parts subject to wear during the normal course of use. For the purpose of this RFP and resulting Master Agreement(s), Refurbished Device shall not have more than 750,000 original copies on it. In addition, Refurbished Device must only contain OEM parts. Refurbished Device must be certified by the Manufacturer.

1.56 **Remanufactured** - The process of disassembling Devices known to be worn or defective that can be reused or brought up to OEM specification by cleaning, repairing or replacing it in a manufacturing environment and then reassembling and testing it, so that it will operate like a new Device. Remanufactured Device must be certified by the Manufacturer.

1.57 **Renewal Term** - A lease term that supersedes the Initial Lease Term, and which a Purchasing Entity may enter into upon thirty (30) days prior written notice to Contractor. Each Renewal Term shall not exceed 12 months, the residual value of the Device, or the Useful Life of the Device. Capital Leases are excluded from going into renewal.

1.58 **Response Time** - The time from when the original Service Call is placed with the Contractor or Authorized Dealer, to when the Service technician arrives at the Purchasing Entity's location.

1.59 **Segment** - The various speeds that Devices are categorized by.

1.60 **Services** – The labor required to be performed by Contractor pursuant to the Master Agreement or an Order. Services may include, but are not limited to, maintenance, MPS and software installation.

1.61 **Service Base Location** - The place of business where the Contractor or Authorized Dealer stores parts and provides training for service technicians.

1.62 **Service Call** - An on-site Service technician visit due to Device error or malfunction.

1.63 **Single-function Printer** - An inkjet or laser Device that only prints and is not capable of other functions such as copying, faxing or scanning.

1.64 **Straight Lease** - A type of agreement in which ownership is not an option and the Total Monthly Payment amount remains firm throughout the Initial Term.

1.65 **Supplemental Documents** – With the exception of software, end-user and click-wrap agreements, Contractor's Supplemental Documents are the only authorized documents under this Master Agreement and are attached hereto as Attachments.

1.66 **Supplies** - Consumable items that gets used up or are discarded once used, such as ink cartridges.

1.67 **Third Party** – A person or entity that may be directly involved, but is not a principal to an arrangement, contract, deal, lawsuit, or transaction.

1.68 **Total Monthly Payment** - The Device portion of the payment, as well as any Service, Supplies or maintenance, and less any applicable taxes.

1.69 **Useful Life** - Period during which a Device is expected to be usable for the purpose in which it was manufactured.

II. Parties and Term of the Master Agreement

2.1 Parties. This Master Agreement is entered into by and between the State of Colorado, acting by and through the Department of Personnel & Administration, State Purchasing & Contracts Office (hereinafter called the "Lead State"), and Toshiba America Business Solutions, Inc. (hereinafter called "Contractor"), for the procurement of A3 MFD's, A4 MFD's, Single-function Printers, Large/Wide Format Equipment, Software, Consumable Supplies, Managed Print Services, Software Related Services (including cloud-based offerings and web-based fleet management tools), and Specialty Printers as approved per this Master Agreement, for the benefit of Participating States, Entity's, and Purchasing Entities. The Contractor and the Lead State agree to the terms and conditions contained herein.

2.2 Initial Term. The initial term of this Master Agreement is for two (2) years, with an effective date of August 1, 2024. The term of this Master Agreement may be amended beyond the initial term for up to three (3) consecutive one (1) year additional terms, upon the mutual agreement of the Lead State and Contractor, by written Amendment. The total duration of the Master Agreement, including any extensions, shall not exceed five (5) years.

2.3 Amendment Limitations. The terms of this Master Agreement will not be waived, altered, modified, supplemented, or amended in any manner whatsoever without prior written agreement of the Lead State and Contractor.

III. Order of Precedence

3.1 Order. This Master Agreement will consist of the following documents:

3.1.1 A Participating Entity's Participating Addendum ("PA"), including its Attachments and Exhibits;

3.1.2 NASPO ValuePoint Master Agreement, including all Exhibits;

3.1.3 An Order issued against the Master Agreement;

3.1.4 The Solicitation, RFP-NP-23-001, Multi-Function Devices and Related Software, Services and Cloud Solutions;

3.1.5 Contractor's response to the Solicitation, as revised (if permitted) and accepted by the Lead State; and

3.1.6 Contractor's Supplemental Documents, which are included as Attachments.

3.2 Conflict. These documents will be read to be consistent and complementary. Any conflict among these documents will be resolved by giving priority to these documents in the order listed above. Contractor terms and conditions that apply to this Master Agreement are only those that are expressly accepted by the Lead State and must be in writing and attached to this Master Agreement as an Exhibit or Attachment.

3.3 Participating Addenda. Participating Addenda will not be construed to diminish, modify, or otherwise derogate any provisions in this Master Agreement between the Lead State and Contractor. Participating Addenda will not include a term of agreement that exceeds the term of the Master Agreement, nor will it include Products and Services not awarded under the Master Agreement.

IV. Participants and Scope

4.1 Requirement for a Participating Addendum. Contractor may not deliver Products under this Master Agreement until a Participating Addendum acceptable to the Participating Entity and Contractor is executed.

4.2 Applicability of Master Agreement. NASPO ValuePoint Master Agreement Terms and Conditions are applicable to any Order by a Participating Entity (and other Purchasing Entities covered by their Participating Addendum), except to the extent altered, modified, supplemented or amended by a Participating Addendum, subject to **section III**. For the purposes of illustration and not limitation, this authority may apply to unique delivery and invoicing requirements, confidentiality requirements, defaults on Orders, governing law and venue relating to Orders by a Participating Entity, indemnification, and insurance requirements. Statutory or constitutional requirements relating to availability of funds may require specific language in some Participating Addenda in order to comply with applicable law. The expectation is that these alterations, modifications, supplements, or amendments will be addressed in the Participating Addendum or, with the consent of the Purchasing Entity and Contractor, may be included in the ordering document (*e.g.*, purchase order or contract) used by the Purchasing Entity to place the Order.

4.3 Authorized Use. Use of specific NASPO ValuePoint Master Agreements by state agencies, political subdivisions and other Participating Entities is subject to applicable state law and the approval of the respective State Chief Procurement Official. Issues of interpretation and eligibility for participation are solely within the authority of the respective State Chief Procurement Official.

4.4 Obligated Entities. Obligations under this Master Agreement are limited to those Participating Entities who have signed a Participating Addendum and Purchasing Entities within the scope of those Participating Addenda. States or other entities permitted to participate may use an informal competitive process to determine which Master Agreements to participate in through execution of a Participating Addendum. Participating Entities incur no financial obligations on behalf of other Purchasing Entities.

4.5 Notice of Participating Addendum. Contractor shall email a fully executed PDF copy of each Participating Addendum to pa@naspovaluepoint.org to support documentation of participation and posting in appropriate databases.

4.6 Eligibility for a Participating Addendum. Eligible entities who are not states may under some circumstances sign their own Participating Addendum, subject to the consent of the Chief Procurement Official of the state where the entity is located. Coordinate requests for such participation through NASPO ValuePoint. Any permission to participate through execution of a Participating Addendum is not a determination that procurement authority exists; the entity must ensure that they have the requisite procurement authority to execute a Participating Addendum.

4.7 Prohibition on Resale. Subject to any specific conditions included in the solicitation or Contractor's proposal as accepted by the Lead State, or as explicitly permitted in a Participating Addendum, Purchasing Entities may not resell Products purchased under this Master Agreement. Absent any such condition or explicit permission, this limitation does not prohibit: payments by employees of a Purchasing Entity for Products; sales of Products to the general public as surplus property for non-leased Equipment; and fees associated with inventory transactions with other governmental or nonprofit entities and consistent with a Purchasing Entity's laws and regulations. Any sale or transfer permitted by this subsection must be consistent with license rights granted for use of intellectual property.

4.8 Individual Customers. Except as may otherwise be agreed to by the Purchasing Entity and Contractor, each Purchasing Entity shall follow the terms and conditions of the Master Agreement and applicable Participating Addendum and will have the same rights and responsibilities for their purchases as the Lead State has in the Master Agreement and as

the Participating Entity has in the Participating Addendum, including but not limited to any indemnity or right to recover any costs as such right is defined in the Master Agreement and applicable Participating Addendum for their purchases. Each Purchasing Entity will be responsible for its own charges, fees, and liabilities. The Contractor will apply the charges and invoice each Purchasing Entity individually.

4.9 Release of Information. Throughout the duration of this Master Agreement, Contractor must secure from the Lead State prior approval for the release of information that pertains to the potential work or activities covered by the Master Agreement. This limitation does not preclude publication about the award of the Master Agreement or marketing activities consistent with any proposed and accepted marketing plan.

4.10 No Representations. The Contractor shall not make any representations of NASPO ValuePoint, the Lead State, any Participating Entity, or any Purchasing Entity's opinion or position as to the quality or effectiveness of the services that are the subject of this Master Agreement without prior written consent.

V. NASPO ValuePoint Provisions

5.1 Applicability. NASPO ValuePoint is not a party to the Master Agreement. The terms set forth in **section V** are for the benefit of NASPO ValuePoint as a third-party beneficiary of this Master Agreement.

5.2 Administrative Fees

5.2.1 NASPO ValuePoint Fee. Contractor shall pay to NASPO ValuePoint, or its assignee, a NASPO ValuePoint Administrative Fee of one-quarter of one percent (0.25% or 0.0025) no later than sixty (60) days following the end of each calendar quarter. The NASPO ValuePoint Administrative Fee must be submitted quarterly and is based on all sales of products and services under the Master Agreement (less any charges for taxes or shipping). The NASPO ValuePoint Administrative Fee is not negotiable. This fee is to be included as part of the pricing submitted with a vendor's response to the Lead State's solicitation.

5.2.1.1 Contractor will report on all Usage Based Equipment sales, and on Usage Based or Life Cycle Service and Supply sales. This method will no longer require the Contractor to capture the actual Service and Supply revenues that are billed to the customer each month.

5.2.1.2 Industry research has shown close to a 1:1 ratio between sales price on a piece of Equipment and the actual amount of Service and Supply costs required to operate that Equipment over its Useful Life. Therefore, to simplify the reporting process and remove the burden to capture the actual Service and Supply costs, the Contractor may report as follows:

5.2.1.2.1 Purchased Equipment: Contractor shall report the actual amount invoiced (less any taxes) for all Equipment sold under the reporting period (calendar quarter). In addition, the Contractor shall report an additional amount equal to the invoice amount and identified as "Life Cycle Service and Supplies," or an actual amount and identified as "Usage Based Service and Supplies," providing the customer elects to enter into a Maintenance Agreement. Thus, in the Contractor's Detailed Sales Report, for each item sold, there will be two-line items: one for the piece of Equipment, and one for the Life Cycle or

Usage Based Service and Supplies. The amount reflected for the Life Cycle Service and Supplies must be equal to the amount of the Equipment.

5.2.1.2.2 Leased Equipment: Contractor may report sales according to the Purchased Equipment methodology described above, or they may report the actual amount invoiced (less any taxes) for the lease during the reporting period (calendar quarter). In addition, the Contractor shall report an additional amount equal to the invoice amount and identified as "Life Cycle Service and Supplies," or an actual amount and identified as "Usage Based Service and Supplies." Thus, in the Contractor's Detailed Sales Report, for each item leased, there will be two-line items: one for the invoice amount to the customer for the Equipment, and one for the Life Cycle or Usage Based Service and Supplies. The amount reflected for the Life Cycle Service and Supplies must be equal to the amount of the invoiced Equipment.

5.2.2 State Imposed Fees. Some states may require an additional fee be paid by Contractor directly to the state on purchases made by Purchasing Entities within that state. For all such requests, the fee rate or amount, payment method, and schedule for such reports and payments will be incorporated into the applicable Participating Addendum. Unless agreed to in writing by the state, Contractor may not adjust the Master Agreement pricing to include the state fee for purchases made by Purchasing Entities within the jurisdiction of the state. No such agreement will affect the NASPO ValuePoint Administrative Fee percentage or the prices paid by Purchasing Entities outside the jurisdiction of the state requesting the additional fee.

5.3 NASPO ValuePoint Summary and Detailed Usage Reports

5.3.1 Sales Data Reporting. In accordance with this section, Contractor shall report to NASPO ValuePoint all Orders under this Master Agreement for which Contractor has invoiced the ordering entity or individual, including Orders invoiced to Participating Entity or Purchasing Entity employees for personal use if such use is permitted by this Master Agreement and the applicable Participating Addendum ("Sales Data"). Timely and complete reporting of Sales Data is a material requirement of this Master Agreement. Reporting requirements, including those related to the format, contents, frequency, or delivery of reports, may be updated by NASPO ValuePoint with reasonable notice to Contractor and without amendment to this Master Agreement. NASPO ValuePoint shall have exclusive ownership of any media on which reports are submitted and shall have a perpetual, irrevocable, non-exclusive, royalty free, and transferable right to display, modify, copy, and otherwise use reports, data, and information provided under this section.

5.3.2 Summary Sales Data. "Summary Sales Data" is Sales Data reported as cumulative totals by state. Contractor shall, using the reporting tool or template provided by NASPO ValuePoint, report Summary Sales Data to NASPO ValuePoint for each calendar quarter no later than thirty (30) days following the end of the quarter. If Contractor has no reportable Sales Data for the quarter, Contractor shall submit a zero-sales report.

5.3.3 Detailed Sales Data. "Detailed Sales Data" is Sales Data that includes for each Order all information required by the Solicitation or by NASPO ValuePoint,

including customer information, Order information, and line-item details. Contractor shall, using the reporting tool or template provided by NASPO ValuePoint, report Detailed Sales Data to NASPO ValuePoint for each calendar quarter no later than thirty (30) days following the end of the quarter. Detailed Sales Data shall be reported in the format provided in the Solicitation or provided by NASPO ValuePoint. The total sales volume of reported Detailed Sales Data shall be consistent with the total sales volume of reported Summary Sales Data.

5.3.4 Sales Data Crosswalks. Upon request by NASPO ValuePoint, Contractor shall provide to NASPO ValuePoint tables of customer and Product information and specific attributes thereof for the purpose of standardizing and analyzing reported Sales Data ("Crosswalks"). Customer Crosswalks must include a list of existing Purchasing Entities and identify for each the appropriate customer type as defined by NASPO ValuePoint. Product Crosswalks must include Contractor's part number or SKU for each Product in Contractor's catalog and identify for each the appropriate Master Agreement category (and subcategory, if applicable), manufacturer part number, product description, eight-digit UNSPSC Class Level commodity code, and (if applicable) EPEAT value and Energy Star rating. Crosswalk requirements and fields may be updated by NASPO ValuePoint with reasonable notice to Contractor and without amendment to this Master Agreement. Contractor shall work in good faith with NASPO ValuePoint to keep Crosswalks updated as Contractor's customer lists and product catalog change.

5.3.5 Executive Summary. Contractor shall, upon request by NASPO ValuePoint, provide NASPO ValuePoint with an executive summary that includes but is not limited to a list of states with an active Participating Addendum, states with which Contractor is in negotiations, and any Participating Addendum roll-out or implementation activities and issues. NASPO ValuePoint and Contractor will determine the format and content of the executive summary.

5.4 NASPO ValuePoint Cooperative Program Marketing, Training, and Performance Review

5.4.1 Staff Education. Contractor shall work cooperatively with NASPO ValuePoint personnel. Contractor shall present plans to NASPO ValuePoint for the education of Contractor's contract administrator(s) and sales/marketing workforce regarding the Master Agreement contract, including the competitive nature of NASPO ValuePoint procurements, the master agreement and participating addendum process, and the manner in which eligible entities can participate in the Master Agreement.

5.4.2 Onboarding Plan. Upon request by NASPO ValuePoint, Contractor shall, as Participating Addendums are executed, provide plans to launch the program for the Participating Entity. Plans will include time frames to launch the agreement and confirmation that the Contractor's website has been updated to properly reflect the scope and terms of the Master Agreement as available to the Participating Entity and eligible Purchasing Entities.

5.4.3 Annual Contract Performance Review. Contractor shall participate in an annual contract performance review with the Lead State and NASPO ValuePoint, which may at the discretion of the Lead State be held in person and which may include a discussion of marketing action plans, target strategies, marketing materials, Contractor reporting, and timeliness of payment of administration fees.

5.4.4 **Use of NASPO ValuePoint Logo.** The NASPO ValuePoint logos may not be used by Contractor in sales and marketing until a separate logo use agreement is executed with NASPO ValuePoint.

5.4.5 **Most Favored Customer.** Contractor shall, within thirty (30) days of their effective date, notify the Lead State and NASPO ValuePoint of any contractual most-favored-customer provisions in third-party contracts or agreements that may affect the promotion of this Master Agreement or whose terms provide for adjustments to future rates or pricing based on rates, pricing in, or Orders from this Master Agreement. Upon request of the Lead State or NASPO ValuePoint, Contractor shall provide a copy of any such provisions.

5.5 **Cancellation.** In consultation with NASPO ValuePoint, the Lead State may, in its discretion, cancel the Master Agreement or not exercise an option to renew, when utilization of Contractor's Master Agreement does not warrant further administration of the Master Agreement. The Lead State may also exercise its right to not renew the Master Agreement if the Contractor fails to record or report revenue for three consecutive quarters, upon 60-calendar day written notice to the Contractor. Cancellation based on nonuse or under-utilization will not occur sooner than [two years] after execution of the Master Agreement. This subsection does not limit the discretionary right of either the Lead State or Contractor to cancel the Master Agreement or terminate for default subject to the terms herein. This subsection also does not limit any right of the Lead State to cancel the Master Agreement under applicable laws.

5.6 **Canadian Participation.** Subject to the approval of Contractor, any Canadian provincial government or provincially funded entity in Alberta, British Columbia, Manitoba, New Brunswick, Newfoundland and Labrador, Nova Scotia, Ontario, Prince Edward Island, Quebec, or Saskatchewan, and territorial government or territorial government funded entity in the Northwest Territories, Nunavut, or Yukon, including municipalities, universities, community colleges, school boards, health authorities, housing authorities, agencies, boards, commissions, and crown corporations, may be eligible to use Contractor's Master Agreement.

5.7 **Additional Agreement with NASPO.** Upon request by NASPO ValuePoint, awarded Contractor shall enter into a direct contractual relationship with NASPO ValuePoint related to Contractor's obligations to NASPO ValuePoint under the terms of the Master Agreement, the terms of which shall be the same or similar (and not less favorable) than the terms set forth in the Master Agreement.

VI. Pricing, Payment & Leasing

6.1 **Pricing.** The prices contained in this Master Agreement or offered under this Master Agreement represent the not-to-exceed ("celling") price to any Purchasing Entity.

6.1.1 MSRP/List Price discount percentages must be guaranteed throughout the term of the Master Agreement, including any renewal terms, however; Contractor may increase its discount percentage at any time. The Lead State must be notified of any such discount percentage increase, and provided with a copy of the new Price List(s).

6.1.2 With the exception of Group C and Sub-Group C1 and C2 Devices, pricing must include all shipping, delivery, and installation costs associated with the Products. Excess installation charges however, may be billable. Refer to **section IV.E.5** of Exhibit A, Statement of Work, for more information.

6.1.3 Price Lists received after the 1st day of the new quarter may not be approved for up to thirty (30) days following submission. In addition, errors in Contractor Price Lists may delay the approval process further.

6.1.4 Contractor may update their lease rates once per quarter by providing the Lead State with documentation regarding said rate changes. Updates to lease rates will not be permitted until 8/1/2025.

6.1.5 Pricing shall remain firm during the first twelve (12) months of the Master Agreement (e.g. 8/1/2024 – 7/31/2025). Contractor may then update their pricing **once per calendar year**. All requested price increases must be sent to the Lead State and include documentation from Contractor which provides a detailed explanation for the increase. While there will not be any restrictions regarding direct and indirect cost increases, it will be at the Lead State's sole discretion to determine if the requested increase has a direct correlation to the Deliverables being offered under the Master Agreement. Price increases shall be allowed for all Products and all Services, including rate and fee structures on maintenance plans.

6.1.6 All approved Price Lists will be submitted by the Lead State to NASPO ValuePoint. Contractor shall then update all applicable websites with the new Price Lists after the NASPO ValuePoint website has been updated. Contractor is not permitted to send Price List updates directly to NASPO ValuePoint.

6.1.7 All inclusive Cost Per Copy (CPC) programs may be offered upon request by the Participating State or Entity, but pricing must not exceed Master Agreement pricing. Contractor must provide the Participating State or Entity with their pricing breakdown which enables the Participating State or Entity to easily compare the pricing in the CPC structure against the pricing in the Master Agreement.

6.1.8 Contractor may offer state-wide promotional discounts, customer location specific discounts, bulk discounts, or spot discounts. Contractor must notify the Participating State or Entity of special state-wide promotional discounts.

6.1.9 No retroactive adjustments to prices or rates will be allowed.

6.2 **Payment.** Unless otherwise agreed upon in a Participating Addendum or Order, Payment after Acceptance will be made within thirty (30) days following the date the entire order is delivered or the date a correct invoice is received, whichever is later. After 45 days the Contractor may assess overdue account charges up to a maximum rate of one percent per month on the outstanding balance, unless a different late payment amount is specified in a Participating Addendum or Order, or otherwise prescribed by applicable law. Payments will be remitted in the manner specified in the Participating Addendum or Order. Payments may be made via a purchasing card with no additional charge.

6.3 **Leasing or Alternative Financing Methods**. The procurement and other applicable laws of some Purchasing Entities may permit the use of leasing or alternative financing methods for the acquisition of Products under this Master Agreement. **Exhibit A, Statement of Work**, contains leasing provisions; however, it shall be at the discretion of each Participating State or Entity to accept these terms, reject these terms, or further negotiate the terms with the Contractor, as long as those negotiations don't fall outside the original scope of the RFP or the Master Agreement.

For example: *The maximum lease term on Group A Devices is 60 months; Contractor is not permitted to offer a lease term in excess of this.*

VII. Ordering

7.1 Order Numbers. Purchase Order numbers must be clearly shown on all acknowledgments, packing slips, invoices, and on all correspondence.

7.2 Quotes. Purchasing Entities may define entity-specific or project-specific requirements and informally compete the requirement among companies having a Master Agreement on an "as needed" basis. This procedure may also be used when requirements are aggregated or other firm commitments may be made to achieve reductions in pricing. This procedure may be modified in Participating Addenda and adapted to the Purchasing Entity's rules and policies. The Purchasing Entity may in its sole discretion determine which Master Agreement Contractors should be solicited for a quote. The Purchasing Entity may select the quote that it considers most advantageous, cost, and other factors considered.

7.3 Applicable Rules. Each Purchasing Entity will identify and utilize its own appropriate purchasing procedure and documentation. Contractor is expected to become familiar with the Purchasing Entities' rules, policies, and procedures regarding the ordering of supplies and/or services contemplated by this Master Agreement.

7.4 Required Documentation. Contractor shall not begin work without a valid Purchase Order or other appropriate commitment document under the law of the Purchasing Entity.

7.5 Term of Purchase. Orders may be placed consistent with the terms of this Master Agreement and applicable Participating Addendum during the term of the Master Agreement and Participating Addendum.

7.5.1 Orders must be placed pursuant to this Master Agreement prior to the termination date thereof, but may have a delivery date or performance period up to 120 days past the then-current termination date of this Master Agreement.

7.5.2 Notwithstanding the previous, Orders must also comply with the terms of the applicable Participating Addendum, which may further restrict the period during which Orders may be placed or delivered.

7.5.3 Financial obligations of Purchasing Entities payable after the current applicable fiscal year are contingent upon agency funds for that purpose being appropriated, budgeted, and otherwise made available.

7.5.4 Notwithstanding the expiration, cancellation or termination of this Master Agreement, Contractor shall perform in accordance with the terms of any Orders then outstanding at the time of such expiration or termination. Contractor shall not honor any Orders placed after the expiration, cancellation, or termination of this Master Agreement, or in any manner inconsistent with this Master Agreement's terms.

7.5.5 Orders for any separate indefinite quantity, task order, or other form of indefinite delivery order arrangement priced against this Master Agreement may not be placed after the expiration or termination of this Master Agreement, notwithstanding the term of any such indefinite delivery order agreement.

7.6 Ordering and Invoicing Specifications. At the discretion of the Participating State or Entity, all Orders pursuant to this Master Agreement, may contain the following:

7.6.1 Name of Purchasing Entity;

7.6.2 The name, phone number, and address of Purchasing Entity representative;

7.6.3 Order date;

7.6.4 Description of the Product and/or Service ordered;

7.6.5 Model number;

7.6.6 Price;

7.6.7 The Master Agreement number; and

7.6.8 Any additional information required by the Participating State or Entity.

7.7 Contractor shall have the ability to accept procurement credit cards, and will not assess any additional charges or fees for processing payments via this method.

7.8 At the discretion of the Participating State or Entity, Contractor shall have the ability to provide a centralized billing option.

7.9 Authorized Dealers shall have the ability to accept Orders from a Purchasing Entity and to invoice a Purchasing Entity directly, unless otherwise specified by a Participating State or Entity.

7.10 With the exception of drop-shipped items, Contractor and/or Authorized Dealers shall not issue an invoice until the Purchasing Entity has confirmed Acceptance, per **section IX**.

7.11 Contractor and/or Authorized Dealers may charge the Purchasing Entity a re-stocking fee for any Products that are not accepted. The amount of the fee shall be the lesser of 10% of the purchase price, or $200.00, unless otherwise specified in a Participating Addendum.

7.12 Contractor and/or Authorized Dealers may estimate meter reads if a Purchasing Entity fails to submit the required information within the specified time-frame.

7.13 All software Orders shall reference the Manufacturer's most recent release or version of the Product, unless the Purchasing Entity specifically requests a different version.

7.14 Contractor, Third-Party leasing companies, and/or Authorized Dealers may bill property tax separately or as otherwise indicated in a Participating Addendum or an Order.

7.15 Contractor and/or Authorized Dealers shall have a process in place for resolving disputed invoices, including escalation procedures. In addition, Contractor and/or Authorized Dealers shall have a process in place for issuing refunds or credits due to invoicing errors, as well as over-payments and Product returns.

7.16 Internet-based Portal and Electronic Catalogs. If Contractor provides the ability to place an Order through an internet-based portal or electronic catalog, then Contractor shall maintain all necessary hardware, software, backup-capacity and network connections required to operate that internet-based portal or electronic catalog. In addition, Contractor shall adhere to the following requirements:

7.16.1 The internet-based portal or electronic catalog shall clearly designate that the Products are part of the NASPO ValuePoint Master Agreement, and shall link to the Participating State or Entity's designated web location;

7.16.2 All Environmentally Preferable Products (EPP) shall be clearly listed;

7.16.3 If Contractor's electronic catalog will either be hosted on or accessed through the Participating State's eCommerce system, then Contractor shall comply with all policies, procedures and directions from the Participating State or Entity in relation to hosting its catalog on or making its catalog accessible through that system;

7.16.4 All information made available through the Participating State or Entity's eCommerce system is accurate and complies with the Master Agreement and the

Participating Addendum; and

7.16.5 Paper catalogs or other digital media catalogs must be supplied to the Participating State or Entity upon request.

7.17 Communication. All communications concerning administration of Orders placed must be furnished solely to the authorized purchasing agent within the Purchasing Entity's purchasing office, or to such other individual identified in writing in the Order.

7.18 Substitutions. If an ordered Product is out-of-stock, Contractor shall notify the Purchasing Entity and request approval before substituting for the out-of-stock item. Contractor's request to substitute shall explain how the substituted Product compares with the out-of-stock item. Any substitute Product offered must be on the Contractor's Master Agreement Price List.

7.19 Contract Provisions for Orders Utilizing Federal Funds. Pursuant to Appendix II to 2 Code of Federal Regulations (CFR) Part 200, Contract Provisions for Non-Federal Entity Contracts Under Federal Awards, Orders funded with federal funds may have additional contractual requirements or certifications that must be satisfied at the time the Order is placed or upon delivery. These federal requirements may be proposed by Participating Entities in Participating Addenda and Purchasing Entities for incorporation in Orders placed under this Master Agreement.

7.20 Supplemental Documents. All Attachments to this Master Agreement have been reviewed and negotiated by the Lead State only to the extent that they comply with the terms and conditions of RFP-NP-23-001 as well as this Master Agreement. Participating States and Entities are still advised however, to review each Supplemental Document and negotiate the terms and conditions further with Contractor if necessary. It shall be at the discretion of Contractor and Purchasing Entity to determine which Supplemental Documents are appropriate for each Order type. With the exception of End User License Agreements (EULA's), clickwrap agreements, and any third party software agreements, which have not been reviewed or negotiated by the Lead State, nor are they attached to this Master Agreement, only the Supplemental Documents attached to this Master Agreement are permitted to be used for any Order placed.

VIII. Shipping and Delivery

8.1 Shipping Terms. All Products must be shipped F.O.B. destination, standard freight pre-paid by the Contractor, to the Purchasing Entity's specified location, unless otherwise indicated in a Participating Addendum.

8.1.1 Notwithstanding the above, responsibility and liability for loss or damage will remain the Contractor's until final inspection and Acceptance when responsibility will pass to the Purchasing Entity except as to latent defects, fraud, and Contractor's warranty obligations.

8.2 Available Products. Devices that are in-stock or otherwise not subject to supply-chain shortages or issues, shall be delivered within thirty (30) calendar days after receipt of Order, unless otherwise specified by the Purchasing Entity.

8.3 Required Updates. Contractor shall provide a minimum of semi-monthly updates to the Purchasing Entity regarding the status of all Devices that are, or will be expected to go, on backorder.

8.4 Software Installation. Software related to the Device must be installed within five (5)

Business Days of the Device installation, or as otherwise stated in an Order.

8.5 **Delivery Days and Receiving Hours.** All deliveries shall be made during Normal Business Hours, which may vary for each Purchasing Entity of each Participating State. The Purchasing Entity shall not be responsible for any additional charges should the Contractor fail to observe specific delivery days and receiving hours. The delivery days and delivery hours shall be established by each individual Purchasing Entity upon Order placement.

8.6 **Inside Deliveries.** All deliveries, with the exception of drop-shipped or desktop Devices, shall be made to the interior location specified by the Purchasing Entity. Specific delivery instructions will be noted on the Order. Any damage to the building interior, scratched walls, damage to the freight elevator, etc., will be the responsibility of the Contractor. If damage does occur, it is the responsibility of the Contractor to immediately notify the Purchasing Entity placing the Order.

8.7 **Packaging.** Products shall be packaged and labeled so as to satisfy all legal and commercial requirements applicable for use by any Purchasing Entity, and shall include, without limitation and if applicable, OSHA material safety data sheets, and shall conform to all statements made on the label. Packages that cannot be clearly identified may be refused and/or returned at no cost to the Purchasing Entity.

IX. Inspection and Acceptance

9.1 **Laws and Regulations.** Any and all Products offered and furnished must comply fully with all applicable Federal, State, and local laws and regulations.

9.2 **Applicability.** Unless otherwise specified in the Participating Addendum, or ordering document, the terms of this **section IX** will apply. This section is not intended to limit rights and remedies under the applicable commercial code.

9.3 With the exception of drop-shipped Devices, Purchasing Entity shall confirm delivery, installation and Acceptance of all Devices covered by each purchase or lease Order, by signing a Delivery and Acceptance Certificate (D&A), as referenced in **Exhibit B, Sample D&A Certificate**, which shows Acceptance of the Device(s) and allows Contractor to invoice for the Device(s).

9.4 Purchasing Entity agrees to sign and return the D&A to Contractor (which, at mutual agreement, may be done electronically) within five (5) Business Days after any Device is installed, or as otherwise stated in a Participating Addendum.

9.5 Failure to sign the D&A or reject the Device(s) within the foregoing five (5) day period shall be deemed as Acceptance by the Purchasing Entity; however, it does not relieve the Contractor of liability for material (nonconformity that substantially impairs value) defects subsequently revealed when Devices are put to use. Acceptance of such Devices may be revoked in accordance with the provisions of the applicable commercial code, and the Contractor shall be liable for any resulting expense incurred by the Purchasing Entity in relation to the preparation and shipping of Devices(s) rejected and returned, or for which Acceptance is revoked.

9.6 **Inspection.** All Devices are subject to inspection at reasonable times and places before Acceptance. Contractor shall provide right of access to the Lead State, or to any other authorized agent or official of the Lead State or other Participating or Purchasing Entity, at reasonable times, to monitor and evaluate performance, compliance, and/or quality assurance requirements under this Master Agreement.

DocuSign Envelope ID: C764E410-020D-4DE5-99C8-4C5B8EF55B29

9.6.1 Devices that do not meet specifications may be rejected. Failure to reject upon receipt, however, does not relieve the contractor of liability for material (nonconformity that substantial impairs value) latent or hidden defects subsequently revealed when goods are put to use.

9.6.2 Acceptance of such goods may be revoked in accordance with the provisions of the applicable commercial code, and the Contractor is liable for any resulting expense incurred by the Purchasing Entity related to the preparation and shipping of Device rejected and returned, or for which Acceptance is revoked.

9.7 Failure to Conform. If any Services do not conform to contract requirements, the Purchasing Entity may require the Contractor to perform the Services again in conformity with contract requirements, at no increase in Order amount. When defects cannot be corrected by re-performance, the Purchasing Entity may require the Contractor to take necessary action to ensure that future performance conforms to contract requirements and reduce the contract price to reflect the reduced value of Services performed.

9.8 Acceptance Testing. Purchasing Entity may establish a process, in keeping with industry standards, to ascertain whether the Device meets the standard of performance or specifications prior to Acceptance by the Purchasing Entity.

9.8.1 The Acceptance Testing period will be five (5) Business Days, unless otherwise specified, starting from the day after the Device is delivered or, if installed by Contractor, the day after the Device is installed and Contractor certifies that the Device is ready for Acceptance Testing.

9.8.2 If the Device does not meet the standard of performance or specifications during the initial period of Acceptance Testing, Purchasing Entity may, at its discretion, continue Acceptance Testing for a maximum of ten (10) Business Days, until the standard of performance is met.

9.8.3 Upon rejection, the Contractor will have thirty (30) calendar days to cure. If after the cure period, the Device still has not met the standard of performance or specifications, the Purchasing Entity may, at its option: (a) declare Contractor to be in breach and terminate the Order; (b) demand replacement Device from Contractor at no additional cost to Purchasing Entity; or, (c) continue the cure period for an additional time period agreed upon by the Purchasing Entity and the Contractor.

9.8.4 Contractor shall pay all costs related to the preparation and shipping of Device returned pursuant to the section.

9.8.5 No Device will be deemed Accepted and no charges will be paid until the standard of performance or specification is met.

X. Warranty

10.1 Applicability. Unless otherwise specified in the Master Agreement, Participating Addendum, or ordering document, the terms of this **section X** will apply.

10.2 The warranty period shall begin upon Acceptance of the Device, and shall be for a minimum of ninety (90) days for purchase or leased Devices. This warranty shall be extended to all Devices acquired under the Master Agreement, including Remanufactured and/or Refurbished Devices.

10.3 Devices that are sold under the resulting Master Agreement will come with the standard features as published on the Manufacturers website, and will not deviate from the stated

specifications.

10.4 Devices shall be in good working order, free from any defects in material and workmanship, and fit for the ordinary purposes they are intended to serve.

10.5 If defects are identified, per mutual agreement of Contractor and the Purchasing Entity, Contractor obligations shall be limited solely to the repair or replacement of Devices proven to be defective upon inspection.

10.6 Replacement of Devices shall be on a like-for-like basis and shall be at no cost to the Purchasing Entity.

10.7 Repair of defective parts and/or Devices shall be at no cost to the Purchasing Entity.

10.8 Upon significant failure of a Device, the warranty period shall commence again for a minimum of ninety (90) days. Significant failure shall be determined by the Participating State.

10.9 Contractor warranty obligations shall not apply if:

10.9.1 The Device is installed, wired, modified, altered, or serviced by anyone other than Contractor and/or their Authorized Dealer;

10.9.2 If a defective or non-authorized Accessory, Supply, software, or part is attached to, or used in the Device; and

10.9.3 The Device is relocated to any place where Contractor Services are not available.

10.10 Contractor agrees to perform its Services in a professional manner, consistent with applicable industry standards.

10.11 It will be at the discretion of each Participating State or Entity to negotiate additional warranty requirements with the Contractor.

10.12 Lemon Clause

10.12.1 This clause shall apply to all Devices that are purchased or leased under the Contractor's Master Agreement. Contractor will utilize its Total Quality Commitment to meet its requirements.

10.12.2 This clause shall not apply if Supplies are used in the Devices that were not manufactured, provided, or authorized by the Contractor.

10.12.3 The application period is thirty-six (36) months from the date of Acceptance.

10.12.4 This clause shall take precedence over any other warranty or Services clauses associated with the Contractor's Master Agreement, or as specified by a Participating State or Entity in their Participating Addendum.

10.12.5 A Purchasing Entity must maintain an uninterrupted Maintenance Agreement with Contractor or their Authorized Dealer, on all purchased Devices in order for this clause to apply past the initial ninety (90) day warranty.

10.12.6 Any Device that fails (except due to operator error) to function in accordance with the Manufacturer's published performance specifications, four (4) times in any four (4) week period due to the same functional issue and/or is subject to recurring related problems, shall be replaced with a new Device that meets or exceeds the requirements of the original Device, at no cost to the Purchasing Entity.

10.13 Rights Reserved. The rights and remedies of the parties under this warranty are in addition to any other rights and remedies of the parties provided by law or equity, including, without limitation, actual damages, and, as applicable and awarded under the law, to a prevailing party, reasonable attorneys' fees and costs.

XI. Equipment Title

11.1 Conveyance of Title. Contractor shall have exclusive title to the Devices being delivered and the Devices shall be free and clear of all liens, encumbrances, and security interests. Title to the Device shall only pass to the Purchasing Entity upon:

11.1.1 Purchasing Entity up-front purchase of the Device;

11.1.2 Purchasing Entity exercising the purchase option at the end of an FMV Lease;

11.1.3 Expiration of a Purchasing Entity's Capital Lease; or

11.1.4 Purchasing Entity has secured Third Party financing and payment is being made directly to the Contractor by the Purchasing Entity.

11.2 Embedded Software. Transfer of title to the Device must include an irrevocable and perpetual license to use any Embedded Software in the Device. If Purchasing Entity subsequently transfers title of the Device to another entity, Purchasing Entity shall have the right to transfer the license to use the Embedded Software with the transfer of Device title. A subsequent transfer of this software license will be at no additional cost or charge to either Purchasing Entity or Purchasing Entity's transferee.

11.3 License of Pre-Existing Intellectual Property. Contractor grants to the Purchasing Entity a nonexclusive, perpetual, royalty-free, irrevocable, license to use, publish, translate, reproduce, transfer with any sale of tangible media or Product, perform, display, and dispose of the Intellectual Property, and its derivatives, used or delivered under this Master Agreement solely for Purchasing Entity, but not created under it ("Pre-existing Intellectual Property"). The Contractor shall be responsible for ensuring that this license is consistent with any third-party rights in the Pre-existing Intellectual Property.

XII. Indemnification

12.1 General Indemnification. The Contractor shall defend, indemnify and hold harmless NASPO, NASPO ValuePoint, the Lead State, Participating Entities, and Purchasing Entities, along with their officers and employees, from and against third-party claims, damages or causes of action including reasonable attorneys' fees and related costs for any death, injury, or damage to tangible property arising from any negligent act, error, or willful omission of the Contractor, its employees or subcontractors or volunteers, at any tier, relating to performance under this Master Agreement, except to the extent such death, injury, or damage to property is arising out of or caused by the negligence or willful misconduct of NASPO, NASPO ValuePoint, the Lead State, Participating Entities, and Purchasing Entities, or their officers, agents, and employees.

12.2 Intellectual Property Indemnification. The Contractor shall defend, indemnify and hold harmless NASPO, NASPO ValuePoint, the Lead State, Participating Entities, Purchasing Entities, along with their officers and employees ("Indemnified Party"), from and against claims, damages or causes of action including reasonable attorneys' fees and related costs arising out of the claim that the Product or its use infringes Intellectual Property rights of another person or entity ("Intellectual Property Claim"), except to the extent such

Intellectual Property Claim is arising out of or caused by the actions, modifications or alterations to the Product made by NASPO, NASPO ValuePoint, the Lead State, Participating Entities, and Purchasing Entities, or their officers, agents, and employees, without the express written consent of the Contractor.

12.2.1 The Contractor's obligations under this section will not extend to any combination of the Product with any other product, system or method, unless the Product, system or method is:

12.2.1.1 provided by the Contractor or the Contractor's subsidiaries or affiliates;

12.2.1.2 specified by the Contractor to work with the Product;

12.2.1.3 reasonably required to use the Product in its intended manner, and the infringement could not have been avoided by substituting another reasonably available product, system or method capable of performing the same function; or

12.2.1.4 reasonably expected to be used in combination with the Product, system or method.

12.2.2 The Indemnified Party shall promptly notify the Contractor after receiving notice of an Intellectual Property Claim. Even if the Indemnified Party fails to provide reasonable notice, the Contractor shall not be relieved from its obligations unless the Contractor can demonstrate that it was prejudiced in defending the Intellectual Property Claim resulting in increased expenses or loss to the Contractor. If the Contractor promptly and reasonably investigates and defends any Intellectual Property Claim, it shall have control over the defense and settlement of the Intellectual Property Claim. However, the Indemnified Party must consent in writing for any money damages or obligations for which it may be responsible.

12.2.3 The Indemnified Party shall furnish, at the Contractor's reasonable request and expense, information and assistance necessary for such defense. If the Contractor fails to vigorously pursue the defense or settlement of the Intellectual Property Claim, the Indemnified Party may assume the defense or settlement of the Intellectual Property Claim and the Contractor shall be liable for all costs and expenses, including reasonable attorneys' fees and related costs, incurred by the Indemnified Party in the pursuit of the Intellectual Property Claim.

12.2.4 Unless otherwise set forth herein, **section 12.2** is not subject to any limitations of liability in this Master Agreement or in any other document executed in conjunction with this Master Agreement.

XIII. Insurance

13.1 Unless otherwise agreed in a Participating Addendum, Contractor shall, during the term of this Master Agreement, maintain in full force and effect, the insurance described in this section. Contractor shall acquire such insurance from an insurance carrier or carriers licensed to conduct business in each Participating Entity's state and having a rating of A-, Class VII or better, in the most recently published edition of Best's Reports. Failure to buy and maintain the required insurance may result in this Master Agreement's termination or, at a Participating Entity's option; result in termination of its Participating Addendum.

13.2 Coverage shall be written on an occurrence basis. The minimum acceptable limits shall be

as indicated below, with no deductible for each of the following categories:

13.2.1 **Commercial General Liability** covering premises operations, Independent Contractors, Products and completed operations, blanket contractual liability, personal injury (including death), advertising liability, and property damage, with a limit of not less than $1 million per occurrence, $2 million general aggregate, $2 million Products and completed operations aggregate and $50,000 and any one fire. If any aggregate limit is reduced below $2,000,000 because of claims made or paid, the Contractor shall immediately obtain additional insurance to restore the full aggregate limit and furnish to the Participating Entity, a certificate or other document satisfactory to the Participating Entity, showing compliance with this provision.

13.2.2 **Cyber Liability** covering claims and losses with respect to network, internet (Cloud) or other data disclosure risks (such as data breaches, releases of Confidential Information, unauthorized access/use of information, and identity theft) with minimum limits of not less than $1,000,000 per occurrence and $2,000,000 aggregate.

13.2.3 Contractor must comply with any applicable State Workers Compensation or Employers Liability Insurance requirements.

13.2.4 **Automobile Liability** covering any auto (including owned, hired and non-owned), with a minimum limit of $1,000,000 each accident combined single limit.

13.3 Contractor shall pay premiums on all insurance policies. Such policies shall also reference this Master Agreement and shall have a condition that the insurer not revoke them until thirty (30) calendar days after notice of intended revocation thereof shall have been given to Purchasing Entity and Participating Entity by the Contractor.

13.4 Prior to commencement of performance, Contractor shall provide to the Lead State a written endorsement to the Contractor's general liability insurance policy or other documentary evidence acceptable to the Lead State that:

13.4.1 Includes the Participating States identified in the Request for Proposal as additional insured's, and;

13.4.2 Provides that the Contractor's liability insurance policy shall be primary, with any liability insurance of any Participating State as secondary and noncontributory. Unless otherwise agreed in any Participating Addendum, the Participating Entity's rights and Contractor's obligations are the same as those specified in the first sentence of this subsection. Before performance of any Purchase Order issued after execution of a Participating Addendum authorizing it, the Contractor shall provide to a Purchasing Entity or Participating Entity who requests it the same information described in this subsection.

13.5 Contractor shall furnish to the Lead State, Participating Entity, and, on request, the Purchasing Entity copies of certificates of all required insurance within seven (7) calendar days of the execution of this Master Agreement, the execution of a Participating Addendum, or the Order's effective date and prior to performing any work. The insurance certificate shall provide the following information: the name and address of the insured; name, address, telephone number and signature of the authorized agent; name of the insurance company (authorized to operate in all states); a description of coverage in detailed standard terminology (including policy period, policy number, limits of liability, exclusions and endorsements); and an acknowledgment of the requirement for notice of cancellation.

Copies of renewal certificates of all required insurance shall be furnished within fifteen (15) days after any renewal date. These certificates of insurance must expressly indicate compliance with each insurance requirement specified in this section. Failure to provide evidence of coverage may, at sole option of the Lead State, or any Participating Entity, result in this Master Agreement's termination or the termination of any Participating Addendum.

13.6 Coverage and limits shall not limit Contractor's liability and obligations under this Master Agreement, any Participating Addendum, or any Order.

13.7 Notice of Cancellation. Contractor shall pay premiums on all insurance policies. Contractor shall provide notice to a Participating Entity who is a state within five (5) business days after Contractor is first aware of expiration, cancellation or nonrenewal of such policy or is first aware that cancellation is threatened or expiration, nonrenewal or expiration otherwise may occur.

13.8 Participating Entities. Contractor shall provide to Participating States and Participating Entities the same insurance obligations and documentation as those specified in **section XIII**, except the endorsement is provided to the applicable Participating State or Participating Entity.

13.9 Furnishing of Certificates. Contractor shall furnish to the Lead State copies of certificates of all required insurance in a form sufficient to show required coverage within thirty (30) calendar days of the execution of this Master Agreement and prior to performing any work. Copies of renewal certificates of all required insurance will be furnished within thirty (30) days after any renewal date to the applicable state Participating Entity. Failure to provide evidence of coverage may, at the sole option of the Lead State, or any Participating Entity, result in this Master Agreement's termination or the termination of any Participating Addendum.

13.10 Disclaimer. Insurance coverage and limits will not limit Contractor's liability and obligations under this Master Agreement, any Participating Addendum, or any Purchase Order.

XIV. General Provisions

14.1 Records Administration and Audit

14.1.1 The Contractor shall maintain books, records, documents, and other evidence pertaining to this Master Agreement and Orders placed by Purchasing Entities under it to the extent and in such detail as will adequately reflect performance and administration of payments and fees. Contractor shall permit the Lead State, a Participating Entity, a Purchasing Entity, the federal government (including its grant awarding entities and the U.S. Comptroller General), and any other duly authorized agent of a governmental agency, to audit, inspect, examine, copy and/or transcribe Contractor's books, documents, papers and records directly pertinent to this Master Agreement or orders placed by a Purchasing Entity under it for the purpose of making audits, examinations, excerpts, and transcriptions. This right will survive for a period of six (6) years following termination of this Agreement or final payment for any order placed by a Purchasing Entity against this Master Agreement, whichever is later, or such longer period as is required by the Purchasing Entity's state statutes, to assure compliance with the terms hereof or to evaluate performance hereunder.

14.1.2 Without limiting any other remedy available to any governmental entity, the Contractor shall reimburse the applicable Lead State, Participating Entity, or

Purchasing Entity for any overpayments inconsistent with the terms of the Master Agreement or Orders or underpayment of fees found as a result of the examination of the Contractor's records.

14.1.3 The rights and obligations herein exist in addition to any quality assurance obligation in the Master Agreement that requires the Contractor to self-audit contract obligations and that permits the Lead State to review compliance with those obligations.

14.2 Confidentiality, Non-Disclosure, and Injunctive Relief

14.2.1 Confidentiality. Contractor acknowledges that it and its employees or agents may, in the course of providing a Product under this Master Agreement, be exposed to or acquire information that is confidential to Purchasing Entity or Purchasing Entity's clients.

14.2.1.1 Any and all information of any form that is marked as confidential or would by its nature be deemed confidential obtained by Contractor or its employees or agents in the performance of this Master Agreement, including but not necessarily limited to (1) any Purchasing Entity's records, (2) personnel records, and (3) information concerning individuals, is confidential information of Purchasing Entity ("Confidential Information").

14.2.1.2 Any reports or other documents or items (including software) that result from the use of the Confidential Information by Contractor shall be treated in the same manner as the Confidential Information.

14.2.1.3 Confidential Information does not include information that (1) is or becomes (other than by disclosure by Contractor) publicly known; (2) is furnished by Purchasing Entity to others without restrictions similar to those imposed by this Master Agreement; (3) is rightfully in Contractor's possession without the obligation of nondisclosure prior to the time of its disclosure under this Master Agreement; (4) is obtained from a source other than Purchasing Entity without the obligation of confidentiality, (5) is disclosed with the written consent of Purchasing Entity; or (6) is independently developed by employees, agents or subcontractors of Contractor who can be shown to have had no access to the Confidential Information.

14.2.2 Non-Disclosure. Contractor shall hold Confidential Information in confidence, using at least the industry standard of confidentiality, and shall not copy, reproduce, sell, assign, license, market, transfer or otherwise dispose of, give, or disclose Confidential Information to third parties, other than its employees, agents or Authorized Dealers, or use Confidential Information for any purposes whatsoever other than what is necessary to the performance of Orders placed under this Master Agreement.

14.2.2.1 Contractor shall advise each of its employees and agents of their obligations to keep Confidential Information confidential. Contractor shall use commercially reasonable efforts to assist Purchasing Entity in identifying and preventing any unauthorized use or disclosure of any Confidential Information.

14.2.2.2 Without limiting the generality of the foregoing, Contractor shall advise

Purchasing Entity, applicable Participating Entity, and the Lead State immediately if Contractor learns or has reason to believe that any person who has had access to Confidential Information has violated or intends to violate the terms of this Master Agreement, and Contractor shall at its expense cooperate with Purchasing Entity in seeking injunctive or other equitable relief in the name of Purchasing Entity or Contractor against any such person.

14.2.2.3 Except as directed by Purchasing Entity, Contractor will not at any time during or after the term of this Master Agreement disclose, directly or indirectly, any Confidential Information to any person, except in accordance with this Master Agreement, and that upon termination of this Master Agreement or at Purchasing Entity's request, Contractor shall turn over to Purchasing Entity all documents, papers, and other matter in Contractor's possession that embody Confidential Information.

14.2.2.4 Notwithstanding the foregoing, Contractor may keep one copy of such Confidential Information necessary for quality assurance, audits, and evidence of the performance of this Master Agreement.

14.2.3 **Injunctive Relief.** Contractor acknowledges that Contractor's breach of **section 14.2** would cause irreparable injury to the Purchasing Entity that cannot be adequately compensated in monetary damages. Accordingly, Purchasing Entity may seek and obtain injunctive relief against the breach or threatened breach of the foregoing undertakings, in addition to any other legal remedies that may be available. Contractor acknowledges and agrees that the covenants contained herein are necessary for the protection of the legitimate business interests of Purchasing Entity and are reasonable in scope and content.

14.2.4 **Purchasing Entity Law.** These provisions will be applicable only to extent they are not in conflict with the applicable public disclosure laws of any Purchasing Entity.

14.2.5 **NASPO ValuePoint.** The rights granted to Purchasing Entities and Contractor's obligations under this section will also extend to NASPO ValuePoint's Confidential Information, including but not limited to Participating Addenda, Orders or transaction data relating to Orders under this Master Agreement that identify the entity/customer, Order dates, line-item descriptions and volumes, and prices/rates. This provision does not apply to disclosure to the Lead State, a Participating State, or any governmental entity exercising an audit, inspection, or examination pursuant to this Master Agreement. To the extent permitted by law, Contractor shall notify the Lead State of the identity of any entity seeking access to the Confidential Information described in this subsection.

14.2.6 **Public Information.** This Master Agreement and all related documents are subject to disclosure pursuant to the Lead State's public information laws.

14.3 Assignment/Subcontracts

14.3.1 Contractor shall not assign, sell, transfer, subcontract or sublet rights, or delegate responsibilities under this Master Agreement, in whole or in part, without the prior written approval of the Lead State, which shall not be unreasonably withheld.

14.3.2 The Lead State reserves the right to assign any rights or duties, including written

DocuSign Envelope ID: C764E410-020D-4DE5-99C8-4C5B8EF55B29

assignment of contract administration duties, to NASPO ValuePoint and other third parties, upon written notice to Contractor.

14.4 Changes in Contractor Representation. The Contractor must, within thirty (30) calendar days, notify the Lead State in writing of any changes in the Contractor's key administrative personnel managing the Master Agreement. The Lead State reserves the right to approve or reject changes in key personnel, as identified in the Contractor's proposal. The Contractor shall propose replacement key personnel having substantially equal or better education, training, and experience as was possessed by the key person proposed and evaluated in the Contractor's proposal.

14.5 Independent Contractor. Contractor is an independent contractor. Contractor has no authorization, express or implied, to bind the Lead State, Participating States, other Participating Entities, or Purchasing Entities to any agreements, settlements, liability or understanding whatsoever, and shall not to hold itself out as agent except as expressly set forth herein or as expressly set forth in an applicable Participating Addendum or Order.

14.6 Cancellation. Unless otherwise set forth herein, this Master Agreement may be canceled by either party upon sixty (60) days' written notice prior to the effective date of the cancellation. Further, any Participating Entity may cancel its participation upon thirty (30) days' written notice, unless otherwise limited or stated in the Participating Addendum. Cancellation may be in whole or in part. Any cancellation under this provision will not affect the rights and obligations attending Orders outstanding at the time of cancellation, including any right of a Purchasing Entity to indemnification by the Contractor, rights of payment for Products delivered and accepted, rights attending any warranty or default in performance in association with any Order, and requirements for records administration and audit. Cancellation of the Master Agreement due to Contractor default may be immediate.

14.7 Force Majeure. Neither party to this Master Agreement shall be held responsible for delay or default caused by fire, riot, unusually severe weather, other acts of God, acts of war which are beyond that party's reasonable control, pandemics, or epidemics that would negatively impact supply chain distribution. The Lead State may terminate this Master Agreement upon determining such delay or default will reasonably prevent successful performance of the Master Agreement. This clause does not absolve Purchasing Entity of their payment obligations for goods or services received. Past due account charges will not accrue until the conclusion of the Force Majeure event, at which point Contractor shall also be expected to resume their Service obligations.

14.8 Defaults and Remedies

14.8.1 The occurrence of any of the following events will be an event of default under this Master Agreement:

14.8.1.1 Nonperformance of contractual requirements;

14.8.1.2 A material breach of any term or condition of this Master Agreement;

14.8.1.3 Any certification, representation or warranty by Contractor in response to the solicitation or in this Master Agreement that proves to be untrue or materially misleading;

14.8.1.4 Institution of proceedings under any bankruptcy, insolvency, reorganization or similar law, by or against Contractor, or the appointment of a receiver or similar officer for Contractor or any of its property, which is not vacated or fully stayed within thirty (30) calendar

days after the institution or occurrence thereof; or

14.8.1.5 Any default specified in another section of this Master Agreement.

14.8.2 Upon the occurrence of an event of default, the Lead State shall issue a written notice of default, identifying the nature of the default, and providing a period of thirty (30) calendar days in which Contractor shall have an opportunity to cure the default. The Lead State shall not be required to provide advance written notice or a cure period and may immediately terminate this Master Agreement in whole or in part if the Lead State, in its sole discretion, determines that it is reasonably necessary to preserve public safety or prevent immediate public crisis. Time allowed for cure will not diminish or eliminate Contractor's liability for damages to the extent provided for under this Master Agreement.

14.8.3 If Contractor is afforded an opportunity to cure and fails to cure the default within the period specified in the written notice of default, Contractor shall be in breach of its obligations under this Master Agreement and the Lead State shall have the right to exercise any or all of the following remedies:

14.8.3.1 Any remedy provided by law;

14.8.3.2 Termination of this Master Agreement and any related Contracts or portions thereof;

14.8.3.3 Intentionally Deleted;

14.8.3.4 Suspension of Contractor from being able to respond to future bid solicitations; and

14.8.3.5 Suspension of Contractor's performance.

14.8.4 Unless otherwise specified in the Participating Addendum, in the event of a default under a Participating Addendum, a Participating Entity shall provide a written notice of default as described in this section and shall have all of the rights and remedies under this paragraph regarding its participation in the Master Agreement, in addition to those set forth in its Participating Addendum. Unless otherwise specified in an Order, a Purchasing Entity shall provide written notice of default as described in this section and have all of the rights and remedies under this paragraph and any applicable Participating Addendum with respect to an Order placed by the Purchasing Entity. Nothing in these Master Agreement Terms and Conditions will be construed to limit the rights and remedies available to a Purchasing Entity under the applicable commercial code.

14.9 Waiver of Breach. Failure of the Lead State, Participating Entity, or Purchasing Entity to declare a default or enforce any rights and remedies will not operate as a waiver under this Master Agreement, any Participating Addendum, or any Purchase Order. Any waiver by the Lead State, Participating Entity, or Purchasing Entity must be in writing. Waiver by the Lead State or Participating Entity of any default, right or remedy under this Master Agreement or Participating Addendum, or by Purchasing Entity with respect to any Purchase Order, or breach of any terms or requirements of this Master Agreement, a Participating Addendum, or Purchase Order will not be construed or operate as a waiver of any subsequent default or breach of such term or requirement, or of any other term or requirement under this Master Agreement, any Participating Addendum, or any Purchase Order.

14.10 Debarment. The Contractor certifies that neither it nor its principals are presently debarred,

suspended, proposed for debarment, declared ineligible, or voluntarily excluded from participation in public procurement or contracting by any governmental department or agency. This certification represents a recurring certification made at the time any Order is placed under this Master Agreement. If the Contractor cannot certify this statement, attach a written explanation for review by the Lead State.

14.11 No Waiver of Sovereign Immunity

14.11.1 In no event will this Master Agreement, any Participating Addendum or any contract or any Purchase Order issued thereunder, or any act of the Lead State, a Participating Entity, or a Purchasing Entity be a waiver of any form of defense or immunity, whether sovereign immunity, governmental immunity, immunity based on the Eleventh Amendment to the Constitution of the United States or otherwise, from any claim or from the jurisdiction of any court.

14.11.2 This section applies to a claim brought against the Participating Entities who are states only to the extent Congress has appropriately abrogated the state's sovereign immunity and is not consent by the state to be sued in federal court. This section is also not a waiver by the state of any form of immunity, including but not limited to sovereign immunity and immunity based on the Eleventh Amendment to the Constitution of the United States.

14.12 Governing Law and Venue

14.12.1 The laws of the Lead State shall govern the construction and effect of this Master Agreement. Venue for any administrative or judicial action relating to this Master Agreement shall be in the City and County of Denver, Colorado.

14.12.2 The construction and effect of any Participating Addendum or Order against this Master Agreement shall be governed by and construed in accordance with the laws of the Participating Entity's or Purchasing Entity's State.

14.12.3 If a claim is brought in a federal forum, then it must be brought and adjudicated solely and exclusively within the United States District Court for (in decreasing order of priority): The Lead State for claims relating to the procurement, evaluation, award, or Contract performance or administration if the Lead State is a party; the Participating State if a named party; the Participating Entity state if a named party; or the Purchasing Entity state if a named party.

14.13 Assignment of Antitrust Rights. Contractor irrevocably assigns to a Participating Entity who is a state any claim for relief or cause of action which the Contractor now has or which may accrue to the Contractor in the future by reason of any violation of state or federal antitrust laws (15 U.S.C. § 1-15 or a Participating Entity's state antitrust provisions), as now in effect and as may be amended from time to time, in connection with any goods or services provided in that state for the purpose of carrying out the Contractor's obligations under this Master Agreement or Participating Addendum, including, at the Participating Entity's option, the right to control any such litigation on such claim for relief or cause of action.

14.14 Survivability. Unless otherwise explicitly set forth in a Participating Addendum or Order, the terms of this Master Agreement as they apply to the Contractor, Participating Entities, and Purchasing Entities, including but not limited to pricing and the reporting of sales and payment of administrative fees to NASPO ValuePoint, shall survive expiration of this Master Agreement and shall continue to apply to all Participating Addenda and Orders until the expiration thereof.

SIGNATURE PAGE

THE PARTIES HERETO HAVE EXECUTED THIS MASTER AGREEMENT

*** Individual signing for Contractor hereby swears and affirms that they are authorized to act on Contractor's behalf and acknowledge that the Lead State is relying on their representations to that effect.**

CONTRACTOR **Toshiba America Business Solutions, Inc.**	STATE OF COLORADO **Jared S. Polis, Governor** Department of Personnel & Administration State Purchasing & Contracts Office Tony Gherardini, Executive Director
By: Larry White Title: President & CEO	
By: DocuSigned by: Larry White A6B11ECE7C8740D... *Signature	By: DocuSigned by: John Chapman EF45AFDEB51E414...
	John Chapman, State Purchasing Manager
Date: 12/20/2023	Date: 12/20/2023

ALL CONTRACTS REQUIRE APPROVAL BY THE STATE CONTROLLER

CRS §24-30-202 requires the State Controller to approve all State Contracts. This Master Agreement is not valid until signed and dated below by the State Controller or delegate. Contractor is not authorized to begin performance until such time. If Contractor begins performing prior thereto, the State of Colorado is not obligated to pay Contractor for such performance or for any Goods and/or Services provided hereunder.

STATE CONTROLLER
Robert Jaros, CPA, MBA, JD

By: DocuSigned by: Nathan Stanley 868586096CC1A43A...

Date: 12/20/2023

EXHIBIT A – STATEMENT OF WORK

I. Product Overview

A. Contractor is authorized to provide Products and Services in the following Groups and Sub-Groups:

1. Primary Products and Services:

Group	Products and Services
A	A3 MFD – *OEM only*
B	A4 MFD – *OEM and Non-OEM*
D	Single-function Printers – *OEM and Non-OEM*
E	Large/Wide Format Equipment – *OEM and Non-OEM*
G	Software – *OEM and Non-OEM*
H	Supplies (consumable) – *OEM and Non-OEM*
I	Managed Print Services

2. Ancillary Products and Services:

Sub-Group	Products and Services
G1	Software Related Services
D1	Specialty Printers (3D, receipt, barcode label, card, cable) – *OEM and Non-OEM*

B. Contractor may not provide Products that have not been approved by the Lead State, with the exception of NSP items, as referenced in **section II.B.3**.

C. Contractor may only offer Devices that meet the minimum requirements as outlined in **section II.A.**

D. Any Products added to the Master Agreement throughout the term of the Contract must be discounted according to the proposed discount for the appropriate Segment or as specified in **section II.A.4.**

E. Contractor may provide MPS under any Group they offer under this Contract. However, MPS may not be provided on any Devices that are being leased to a Purchasing Entity by another Manufacturer, unless Contractor has a written agreement with the Manufacturer to do so. Further, Contractor is not permitted to provide (e.g. sell, lease, rent) Devices under any Group they have NOT been awarded.

F. Contractor may add, remove or modify Products and Services on their Price Lists **once per calendar month**, beginning in September 2024. Modifications do NOT include price increases. Refer to **section 6.1 of the Master Agreement Terms and Conditions** for information regarding pricing.

G. Any Device additions must be updated with Buyer's Lab within ninety (90) days of submission to the Lead State. Failure to adhere to this requirement will result in the Device(s) being removed from the Master Agreement Price List(s) until such time they can be verified on Buyer's Lab. In addition, if a Device is acquired by a Purchasing Entity that is not listed on Buyer's Lab within 90 days of it being added to the Price List, then Contractor shall remove the Device from the Purchasing Entity location and substitute it with a Device of equal or greater value, at no charge to the Purchasing Entity. This substituted Device must be on the Price List, AND listed on Buyer's Lab.

II. Master Agreement Deliverables

A. Primary Product and Service Offerings

1. Group Categories. Segments shall be utilized to distinguish the various speeds of the Devices within Groups. The speeds are denoted in Page per Minute (PPM). The Segments for each Group are as follows:

Group A – MFD, A3	
Segment	**PPM**
2	20 – 30
3	31 – 40
4	41 – 50
5	51 – 60
6	61 – 70
7	71 – 90

Group B – MFD, A4	
Segment	**PPM**
1	Up to 20
2	21 - 30
3	31 - 40
4	41 - 50
5	51 - 60
6	61+

Group D – Single-function Printers	
Segment	**PPM**
1	Up to 20
2	21 – 40
3	41 – 60
4	61+

Group E – Large/Wide Format Equipment			
Segment	**A1 or D Size PPM***	**Width – Office**	**Width - Industry**
Low	0 – 3	24" – 44"	46" and higher
Medium Low	4 - 9	24" – 44"	46" and higher
Medium High	10 - 19	24" – 44"	46" and higher
High	20+	24" – 44"	46" and higher

*Speeds denoted above are based on b&w output

DocuSign Envelope ID: C764E410-020D-4DE5-99C8-4C5B8EF55B29

2. **Device Configurations.** Devices must be equipped, at a minimum, with the following Accessories/capabilities:

2.1 Group A – MFD, A3

- **a.** New power filter;
- **b.** Duplex for Segment 3 and above;
- **c.** Standard paper drawer(s) equal to or greater than:
  - **i)** One (1) paper supply for Segment 2;
  - **ii)** Two (2) paper drawers for Segments 3 and 4; and/or
  - **iii)** 2,000 sheet paper capacity for Segments 5 and above.
  - **iv)** Paper size capacity up to 11” x 17”; and
  - **v)** Bypass paper supply, if applicable for Segment.

2.2 Group B – MFD, A4

- **a.** New power filter;
- **b.** Bypass paper supply;
- **c.** Standard paper drawer(s) equal to or greater than:
  - **i)** One (1) paper supply for Segments 1 and 2;
  - **ii)** Two (2) paper drawers for Segments 3 and 4; and/or
  - **iii)** 1,000 sheet capacity for Segments 5 and above.
- **d.** Paper size capacity up to 8 1/2” x 14”; and
- **e.** Envelope adjustment capability.
- **a.** Network connectivity.

2.3 Group D – Single-function Printers

- **a.** Must include an inkjet, light emitting diode (LED), or laser print engine;
- **b.** Standard paper drawer(s);
- **c.** Standard paper capacity; and
- **d.** Network connectivity.

2.4 Group E – Large/Wide Format Equipment

- **a.** Hard-Disk drive;
- **b.** Network connectivity;
- **c.** Touch screen control panel; and
- **d.** Automatic Media Selection – a built-on sensor detects the size of the original and the proper media size is then selected.

3. **Device Standards.** Devices must meet the following requirements:

DocuSign Envelope ID: C764E410-020D-4DE5-99C8-4C5B8EF55B29

3.1 Group A Base Units are OEM only.

3.2 Group A and Group B must be EPEAT registered to a minimum of Bronze Standard within one (1) year of being added to the Master Agreement Price List.

3.3 Group D must be Energy Star compliant or EPEAT registered to a minimum of Bronze Standard within one (1) year of being added to the Master Agreement Price List.

3.4 Group E must be Energy Star compliant and registered within one (1) year of being added to the Master Agreement Price List.

3.5 If Contractor Devices fail to meet the EPEAT Bronze Standard, or be Energy Star compliant (applicable to Group D and E Devices only) within one (1) year, then they will be removed from the Price List. If said Devices have already been placed at a Purchasing Entity's location, then Contractor must replace the Devices with a comparable, qualified model, at no cost to the Purchasing Entity.

3.6 All Devices must be Newly Manufactured, current, Remanufactured, or Refurbished, except as specified in a Participating Addendum. Discontinued Devices are not permitted to be offered under the Master Agreement.

3.7 Devices, when installed, and if available, must be set-up to receive automatic software updates and patches.

3.8 Device specifications must be published on the Contractor website.

3.9 MSRP must not exceed what is listed with Buyers Laboratory Inc., or List Price must not exceed what is published on the Manufacturer's website.

3.10 Devices must maintain a PPM speed, according to Segment classification.

3.11 Devices must be compatible with using recycled paper, up to and including, 100% Post-Consumer Waste (PCW) paper. Contractor may not fault the use of recycled paper for Device failures, as long as the recycled paper in use meets the standard paper specifications (e.g., multi-purpose, copy, or laser paper).

4. Device Exceptions

4.1 Group B, Group D, Sub-Group D1, and Group E, will not be restricted to OEM, and do not have to be Private Labeled.

4.2 Digital Duplicators may be offered by Contractor under Group A, and must be priced based on the minimum discount offered in the Segment to which they most closely relate.

4.3 Under Group E, Contractor may offer Large/Wide Format Equipment that accommodates **all** paper sizes. Pricing shall be based on the discount offered for the Segment in which the Device belongs.

5. Accessories

5.1 Contractor shall provide OEM and/or Third Party compatible Accessories that compliment or enhance the features of the Device.

5.2 Contractor may also maintain a separate price list for Accessories for Base Units that have been discontinued. The pricing must be based on the same discount offered, per the 'Discount from MSRP' tab, on the applicable Group Price List.

5.3 Purchasing Entities may add Accessories to Devices that have been purchased, leased or rented under prior NASPO ValuePoint Master Agreements, as well as via any other means. If the Device is currently being leased, Purchasing Entity must obtain Contractor approval to add Accessories. Purchasing Entities shall also be advised that obtaining Accessories from a Third Party and not the Contractor or their Dealer may void certain warranty or maintenance agreement provisions.

6. Remanufactured and Refurbished Equipment

6.1 Contractor may offer Remanufactured and/or Refurbished Equipment under any Group.

6.2 Remanufactured and Refurbished Equipment is not required to be EPEAT registered or Energy Star compliant.

6.3 Equipment can be acquired via a purchase or lease agreement.

6.4 Contractor must notify the Purchasing Entity in writing, when Remanufactured or Refurbished Equipment is being offered.

6.5 All Remanufactured or Refurbished Equipment must be clearly labeled as such, and must be certified by the Manufacturer.

6.6 Remanufactured Equipment must be priced according to the minimum discount offered for similar Equipment in the same Group and Segment of the resulting Master Agreement.

6.7 Refurbished Equipment shall be offered at a minimum discount of 10% less than the lowest priced Device of the Group and Segment to which the Refurbished Equipment belongs.

6.8 Service and Supplies for Remanufactured and Refurbished Equipment will receive the same pricing as the Published Price for the Group and Segment to which it belongs.

7. Group G - Software

7.1 May be provided by Contractor to enhance the capabilities of the Devices, or may be provided as a standalone option on any owned or leased Device.

7.2 Software pricing for unique designs or complex configurations will be quoted on a case by case basis.

7.3 Contractor may provide OEM and/or Third Party software.

7.4 All software drivers shall be, at a minimum, Windows 10 compliant, and all Devices must have universal software drivers.

7.5 Purchasing Entities that acquire software shall be subject to the license agreements distributed with such software, provided such terms do not contradict

the language in the Master Agreement, and unless otherwise stated in a Participating Addendum.

7.6 Software Subscriptions

a. Software pricing shall be inclusive of available software patches and any updates.

b. Purchasing Entities shall have the option to finance software subscriptions by utilizing the proposed lease rates.

c. Any new releases of software versions (upgrades) shall be chargeable to the Purchasing Entity; however, Contractor may not charge for the installation of the software upgrade, unless installation is excessive, and charges are agreed to by Purchasing Entity.

d. License fees and support fees shall remain firm throughout the term of the agreement.

e. Software subscriptions shall not be subject to automatic renewals, unless otherwise agreed to in an Order.

f. Contractor shall be responsible for communicating all updates, patches, and new releases/versions to Purchasing Entities.

g. Contractor shall provide a web-based or toll-free hotline during Normal Business Hours for Purchasing Entities to report software problems or answer software related questions.

8. Group H – Supplies (consumable)

8.1 Contractor may offer OEM or compatible Ink and Roll paper for Group E Devices. The Ink and/or paper may be purchased as standalone items, and will not be included as part of a Maintenance Agreement, nor will it be wrapped into the Total Monthly Payment on a lease agreement.

8.2 Contractor may offer OEM or compatible consumable Supplies for Groups A, B, and D, as well as Sub-Group D1. These Supplies may be purchased as standalone items or included as part of a Maintenance Agreement. Under no circumstances may the Supplies, regardless of quantity, be financed, unless they are start-up Supplies. All compatible Supplies must meet OEM standards for performance and quality. The Supplies that may be offered are:

a. Toner;

b. Staples;

c. Ink;

d. Print Cartridges;

e. Imaging Drums;

f. Fuser Kits;

g. Cleaning Kits;

h. Transfer Kits;

i. Waste Toner Bottles;

j. Fuser Oil;

k. Ozone Filters;

l. Ribbon;

m. Developer;

n. Rollers and Pads; and

o. Maintenance Kits.

8.3 Toner must be free of carcinogenic, mutagenic, or teratogenic substances, and should avoid petroleum inks and inks with high volatile compounds. Toner cartridges should also be remanufactured, contain recycled content, **or** be bio-based.

8.4 Contractor shall provide the Purchasing Entity with a method to return the empty toner cartridges at no additional charge.

9. Service Offerings

9.1 Group I - Managed Print Services

a. The main components of an MPS engagement are needs assessment, selective or general replacement of Devices, and the Service, parts and Supplies needed to operate the new and/or existing Devices, including existing Third Party Devices as owned by the Purchasing Entity. The Contractor tracks how the Device fleet is being used, the problems associated with that use, and customer satisfaction in regards to meeting statement of work objectives.

b. In addition to the ongoing monitoring and management of a fleet of Devices, Contractor must also offer project implementation Services, and customer help-desk support and training.

c. Contractor may also offer hourly Services for consulting purposes, project management, change management plans, and other staffed Services which meet customer needs such as to operate copy centers or complete back file scanning projects.

d. MPS may also include enterprise content management Services and workflow optimization components, such as scanning and document capture solutions, developing custom applications for smart MFDs that automate paper-intensive document workflows and route scanned pages to document management systems. It can also be extended to include the restructuring of document workflows. Some MPS engagements may be designed to improve document security or to reduce print volumes and power consumption for environmental reasons.

e. All MPS engagements shall require the Contractor and Purchasing Entity to complete a detailed statement of work, similar to the format referenced in **Attachment 10, Toshiba Sample MPS Statement of Work**, and it must be

approved by both parties prior to the initiation of any engagement.

f. Any MPS engagement shall include the following:

i) **Free Initial Assessment** (includes, but is not limited to: document workflow; identification of Service, Supplies, and parts; current output; total cost of ownership; employee to Device ratio; preliminary estimated cost savings);

ii) **Implementation** (e.g. plan development; hardware and software installation and set-up);

iii) **Remote Device Monitoring** (e.g. job accounting; automated meter reads; automated toner replenishment);

iv) **End-user Support** (e.g. training; Help Desk); and

v) **Account management** (e.g. reporting; invoicing; customer business reviews).

g. The MPS engagement may include, but is not limited to, the following:

i) **Professional Services** (e.g. consulting; project management; record management; network and data security; document workflow consulting; document scanning; back-file conversion; mail-room Services);

ii) **Cost-based Assessment** (e.g. asset mapping; end-user survey; detailed recommendation; analysis and plan design);

iii) **Change Management;**

iv) **Maintenance** (e.g. Preventative Maintenance; Service and repair; on-site break/fix; parts management; warranty management);

v) **Ongoing Fleet Management and Optimization** (e.g. consumable spend; continual assessments; green initiatives; add/move/change Services; disaster recovery).

vi) **Software and Cloud Solutions** (e.g. mobile print, pull-print, enterprise content management; automated workflow; capture and route; security); and

vii) **Cartridge Recycling**.

h. The free initial assessment shall not constitute a commitment on behalf of the Purchasing Entity. Upon request from a Purchasing Entity, Contractor must provide the assessment with the understanding that the Purchasing Entity is under no obligation to enter into an MPS engagement.

i. MPS pricing and billing options shall be flexible and the Purchasing Entity will drive the complexity of the solution required with a staged approach to implementation.

9.2 Maintenance Agreements. No Maintenance Agreement shall be subject to automatic renewals.

DocuSign Envelope ID: C764E410-020D-4DE5-99C8-4C5B8EF55B29

a. Pricing

i) Pricing must include a zero base, cost per click rate for b&w and/or color for Groups A, B, and D.

ii) Pricing for a monthly base charge, a set copy allowance and an overage rate for b&w and/or color may also be provided.

iii) Pricing for a monthly base charge, a set copy allowance, an overage rate for b&w and/or color, and Supplies may also be provided.

iv) Flat Rate Fee pricing must be provided that includes all parts, labor, Preventative Maintenance, and Service Calls for Groups A, B, and D. Supplies may or may not be included.

v) Pricing for ALL Groups may also be provided that includes all parts, labor, Preventative Maintenance (if applicable), and Service Calls, but excludes Supplies.

vi) Paper and ink for Group E Devices shall not be included as part of the Service and Supply pricing.

vii) Contractor may increase their Service and Supply pricing to include staples (if applicable to the Device).

viii) Contractor may provide a flat rate fee without staples, and a flat rate fee with staples. All flat rate fees shall allow for an annual increase of up to 5%.

ix) Contractor may charge flat rate fees for Services performed on any Accessories.

x) Service Calls due to misuse, neglect or abuse shall not be covered by the Maintenance Agreement, and Contractor and Authorized Dealers may bill the Purchasing Entity at an hourly rate for Services rendered.

xi) 11”x17” impressions may be counted as one (1) click or two (2) clicks on Group A Devices.

xii) A two-sided document shall be counted as two (2) clicks.

xiii) Contractor must not charge for scans on any MFD.

b. Initial Term

i) Pricing shall remain firm for the initial term of the Maintenance Agreement (e.g. 12, 24, 36 months etc.). Upon renewal of the Maintenance Agreement, Contractor may adjust the pricing, as long as the pricing does not exceed Master Agreement rates.

ii) For leased Devices, the total Maintenance Agreement term shall be equal to the term of the lease (e.g. 24, 36, 48 months etc.).

iii) For purchased Devices, the initial term is determined by the Purchasing Entity, as long as it does not exceed 60 months.

c. Renewal Term

If a Purchasing Entity wishes to renew a Maintenance Agreement for Devices

DocuSign Envelope ID: C764E410-020D-4DE5-99C8-4C5B8EF55B29

that were acquired under prior Master Agreement (RFP-NP-18-001) or Master Agreement (3091), then **section II.A (9.2)(h)** shall apply.

d. Blended Rates

i) Contractor must have the ability to blend the Service and Supply costs over a large Device fleet, and the Blended Rate must cover all units in the fleet.

ii) The Blended Rate must be divided between b&w and color.

iii) Contractor shall provide the Purchasing Entity with the Blended Rate calculation prior to Order placement.

iv) Utilizing a Blended Rate shall be at the discretion of the Participating State or Entity, and/or the Purchasing Entity.

e. Manual Meter Reads

i) Contractor must have an electronic method for collecting meter reads from a Purchasing Entity.

ii) Meter reads may be submitted via the Contractor's online portal, or through email, or facsimile.

iii) A Participating State or Entity may also elect, at their discretion, to submit meter reads through the Device.

f. Customer Owned Devices

i) Purchasing Entities may elect to enter into a Maintenance Agreement for Devices they already own, or Devices they acquire through an up-front purchase.

ii) The Maintenance Agreement may be priced on a flat rate fee, which shall include parts, labor, Preventative Maintenance (if applicable) and Service calls. Supplies may or may not be included.

g. Leased Devices

i) Contractor shall be required to provide a Maintenance Agreement on all Devices that are leased by a Purchasing Entity.

ii) The Maintenance Agreement shall be priced based on a cost per click rate, or a monthly base charge.

h. Legacy Devices

i) Upon request from the Purchasing Entity, Contractor may provide a Maintenance Agreement on any Device that is owned or was leased or rented through Master Agreement (RFP-NP-18-001), Master Agreement (3091), or via any other means, providing the following conditions are met:

1) The Device has not reached the end of its Useful Life;

2) The maximum term of the Maintenance Agreement does not exceed the Useful Life of the Device, unless otherwise specified in a Participating Addendum; and

3) The Maintenance Agreement adheres to the same requirements as outlined in **sections II.A (9.2)(f)** and **II.A (9.2)(g)**.

ii) Devices that were previously serviced by another Dealer or Manufacturer must be inspected and repaired, if necessary. Upon mutual agreement, Contractor may charge Purchasing Entity for any parts and/or labor required to bring the Device up to acceptable maintenance levels.

iii) If the Device has been at the Purchasing Entity's location for less than five (5) years, then Maintenance Agreement pricing shall not exceed the new Master Agreement pricing, until the Purchasing Entity reaches the five (5) year mark. Refer to **section II.A (9.2)(h)(iv)** below for additional information.

iv) If the Device has been at the Purchasing Entity's location for more than five (5) years, then Maintenance Agreement pricing shall not exceed 120% of the Service and Supply pricing in the new Master Agreement.

B. Ancillary Product and Service Offerings

1. Sub-Group Categories. The following Products and Services are sub-groups of the Primary Product and Service Offering Groups.

1.1 Sub-Group G1 – Software Related Services. This is a sub-group of Group G – Software. This sub-group shall include, but not be limited to, the following Services:

a. Cloud-based scanning (software as a service, enterprise content management); and

b. Industrial Print solutions (back-file conversion, enterprise content management).

1.2 Sub-Group D1 – Specialty Printers. This is a sub-group of Group D – Single-Function Printers. Products offered under this sub-group are not restricted to OEM, and may include, but not be limited to, the following:

a. Barcode labels;

b. High Volume Inkjet;

c. 3D Printers;

d. Receipt printers;

e. Card printers; and

f. Cable printers.

2. Sub-Group Category Discounts. Products in Sub-Group D1 must be discounted at a minimum of 5% for OEM and a minimum of 2% for Non-OEM, unless such discounts would exceed the discount amount offered for OEM and Non-OEM within Group D.

3. Open Market Items

3.1 Contractor may offer Not Specifically Priced (NSP) items that compliment or enhance the Devices and/or Services offered under the Master Agreement. NSP items will **not** include:

a. Interactive White boards;

b. Computers, monitors, or other related hardware items;

c. Fax machines;

d. Kiosk machines;

e. Overhead Projectors; and

f. Cameras.

3.2 NSP items may only be acquired through the Contractor or their Authorized Dealer and must be reported quarterly with all other sales under the Master Agreement.

3.3 NSP items must be priced at a minimum discount of 15% from MSRP or List Price.

3.4 NSP items may be offered to a Purchasing Entity as a stand-alone option, and the maximum allowable amount of all NSP items in a single Order shall be determined by the Participating State or Entity.

3.5 It shall be at the discretion of the Participating State or Entity to allow Open Market Items in their Participating Addendum.

4. Emerging Technologies

4.1 Upon approval from the Lead State, Contractor may add new, related technology to the resulting Master Agreement.

4.2 Technology is not restricted to OEM, nor is it required to be Private Labeled.

4.3 Any new technology that a Contractor requests to add to their Price List must contain a full description of the Product, the MSRP and pricing information, and an explanation/justification as to how the Product conforms to the requirements of the RFP and Master Agreement.

4.4 Any new technology must be priced according to the lowest discount offered for any Product under the Master Agreement. No discount or a 0% discount does not qualify as a "lowest" discount.

III. Purchase and Lease Programs

A. Acquisition Methods. Contractor may offer the following:

Financial Vehicle	Standard Terms Offered
Purchase	N/A
Fair Market Value Lease	12,18, 24, 36, 48 and 60 months
Capital Lease	
Straight Lease	

1. All Devices on Contractor's Price List may be purchased or leased, either as a packaged-deal, or stand-alone item.

B. Device Trade-In

1. A Purchasing Entity shall have the option, at the Contractors sole discretion, and based upon Participating State or Entity regulations and laws, and Purchasing Entity policies, to

do a Device Trade-In, when placing a purchase or lease Order.

2. The value for the Device Trade-In shall be negotiated by the Purchasing Entity and the Contractor, and shall not include any disposal or shipping fees.

C. Lease Rates

1. Contractor may elect to include property tax in their lease rates, or they may bill the Purchasing Entity separately for property tax.

2. Once a Purchasing Entity enters into a lease agreement, the lease rate must remain fixed throughout the Initial Lease Term, regardless of whether the Contractor had increased their lease rates in the Master Agreement Price Lists. If Contractor has decreased their lease rates in their Price Lists, then they may extend that lower rate to the Purchasing Entity for new orders.

3. Device Payments for Renewal Terms must never exceed Master Agreement pricing.

4. If a Purchasing Entity enters into a Renewal Term, then the Device Payment will be subject to the lease rates listed in the most recent Price Lists posted on the NASPO ValuePoint website.

5. Contractor may update lease rates on a quarterly basis to allow for changes in the financial market. The rates must be indexed against the US Daily Treasury Yield Curve Rates, or a comparable index, and must be the rate in effect at the end of each calendar quarter.

6. Lease rates must be proposed as a decimal multiplying factor in such a manner that the purchase price of the Device may be multiplied by the lease rate to arrive at the resulting monthly Device Payment. Proposed rates must include the following information:

6.1 The Daily Treasury Yield Curve (or comparable index) Rate;

6.2 The date used for the Daily Treasury Yield Curve (or comparable index) Rate;

a. The fixed margin for each lease type being proposed, and how that margin is determined; and

b. The methodology for determining the 48 month base rate if a 4-year rate is not published.

6.3 Contractor must offer Coterminous lease rates to any Purchasing Entity wishing to add Products to an existing lease agreement. The calculation for the Coterminous lease rates must adhere to the following methodology:

***For example**: A customer enters into a 36 month FMV Lease, and 12 months into that lease, they decide to add an Accessory to the Base Unit. The Contractor shall divide the 36 month cumulative Device Payment by 24 months to arrive at the monthly Coterminous payment for that Accessory. That payment will then be added to the existing Device Payment. The new Total Monthly Payment must then be disclosed to the Purchasing Entity.*

D. Leasing Overview

1. All lease programs shall remain with the Contractor or Authorized Dealer through an in-house leasing program, or through the financial branch or subsidiary of Contractor. In

DocuSign Envelope ID: C764E410-020D-4DE5-99C8-4C5B8EF55B29

addition, Contractor and their Authorized Dealer may use Third Party leasing companies, however; all Third Party leasing company documents must be reviewed and approved by the Lead State and said documents must be incorporated into the Master Agreement before any Participating State, Participating Entity, or Purchasing Entity can use them. It will be at the discretion of the Participating State, Participating Entity, or the Purchasing Entity as to whether billing shall be in the name of Contractor, Authorized Dealer or Third Party leasing company. All contractual obligations however, will still be the responsibility of the Contractor.

2. A Purchasing Entity may lease Devices pursuant to the terms and conditions in this Master Agreement, and according to the requirements listed in their states' Participating Addendum.

3. Lease agreements shall not be subject to automatic renewals. This is non-negotiable in any Participating Addendum or Order.

4. A lease agreement issued prior to the termination of the Master Agreement and Participating Addendum, shall survive the termination of the Master Agreement and the Participating Addendum, and all terms and conditions of the Master Agreement and Participating Addendum shall continue to apply.

5. With the exception of a $1 Buyout Lease arrangement, or unless exercising the purchase option on an FMV Lease, a Purchasing Entity shall return the Device at the end of the Initial Lease Term, or at the end of the Renewal Lease Term, or the Contractor may pick the Device up, without any further financial obligations to the Purchasing Entity.

6. Device pickups must be performed within thirty (30) calendar days of the end of the Initial or Renewal Term.

7. Device returns must be performed within thirty (30) calendar days after the Contractor or Authorized Dealer provides return shipping instructions to the Purchasing Entity.

8. If Purchasing Entity fails to make Device available for pickup after thirty (30) calendar days, then Contractor or Authorized Dealer may bill the Purchasing Entity, at the total monthly payment amount for such Device, for each month that the Device remains at Purchasing Entity's location. Contractor or Authorized Dealer is not permitted to bill the Purchasing Entity for failure of Contractor or Authorized Dealer to pickup the Device when Purchasing Entity has made it available.

9. Contractor and/or Authorized Dealers shall be responsible for all Device pickup and return costs.

10. The maximum term on any Initial Lease Term shall be 60 months.

11. The length of a Renewal Term shall be at the discretion of the Participating State or Entity, but at no time shall the Renewal Term exceed the Useful Life of the Device.

12. All Renewal Terms shall be billed on a monthly basis.

13. If a Purchasing Entity elects to enter into a month to month Renewal Term, they may cancel at anytime, without penalty, by giving Contractor thirty (30) days advance, written notice.

14. If a Purchasing Entity elects to enter into a 12-month Renewal Term, the Renewal Term will automatically terminate at the end of the 12-month period, unless the Purchasing Entity has notified the Contractor that they wish to enter into a new Renewal Term. If a Purchasing Entity wants to cancel their 12-month Renewal Term early, then early termination fees shall apply, and will be equivalent to the remaining stream of Equipment payments only (i.e. less maintenance).

E. Leasing Options

1. FMV Lease

1.1 A Purchasing Entity shall have the option to enter into an Initial Lease Term of 12,18, 24, 36, 48, or 60 months for Group A, Group B, Group D, Sub-Group D1, and Group E, based upon the Contractor's available options, and at the discretion of the Participating State or Entity.

1.2 Upon the expiration of the Initial Lease Term, a Purchasing Entity may do one of the following:

a. Exercise their purchase option;

b. Renew the lease on a month to month basis, or a 12 month basis, at the discretion of the Participating State or Entity; or

c. Return the Device to the Contractor, or have the Contractor pick the Device up.

2. Capital Lease ($1 Buyout Lease)

2.1 A Purchasing Entity shall have the option to enter into an Initial Lease Term of 12, 18, 24, 36, 48, or 60 months for Group A, Group B, Group D, Sub-Group D1, and Group E, based upon the Contractor's available options, and at the discretion of the Participating State or Entity.

2.2 Upon the expiration of the Initial Lease Term, the Contractor shall provide title to the Device to the Purchasing Entity, or as otherwise determined in a Participating Addendum or an Order, and the Purchasing Entity shall not be subject to any additional expense in order to assume possession of the Device.

3. Straight Lease

3.1 A Purchasing Entity shall have the option to enter into an Initial Lease Term of 12, 18, 24, 36, 48, or 60 months for Group A, Group B, Group D, Sub-Group D1, and Group E, based upon the Contractor's available options, and at the discretion of the Participating State or Entity.

3.2 Upon the expiration of the Initial Lease Term, a Purchasing Entity may do one of the following:

a. Renew the lease on a month to month basis, or a 12 month basis, at the discretion of the Participating State or Entity; or

b. Return the Device to the Contractor, or have the Contractor pick the Device up.

F. Leasing Terms and Conditions

1. **Possession and Return of Leased Devices**

   1.1 The Purchasing Entity is responsible for risk of loss to the Devices while the Devices are in Purchasing Entity's possession. Purchasing Entity shall be relieved of all risks of loss or damage to the Devices during periods of transportation and de-installation.

   1.2 Contractor or Authorized Dealer must notify a Purchasing Entity, in writing, of their End of Term (EOT) options at least sixty (60) days prior to the end of any Initial Lease Term. Such notification may include, but not be limited to, the following:

   a. Any acquisition or return options, based on the type of lease agreement;

   b. Any renewal options, if applicable; and/or

   c. Hard drive removal and surrender cost, if applicable.

   1.3 If a Purchasing Entity desires to exercise a purchase, renewal, or return of the Device, it shall give Contractor at least thirty (30) days written notice prior to the expiration of such lease term. Notwithstanding anything to the contrary, if Purchasing Entity fails to notify Contractor of its intent with respect to the exercise of a purchase, renewal, or return of the Device, the Initial Lease Term shall be terminated on the date as stated in the Order and removal of the Device will be mutually arranged, unless otherwise specified in an Order.

   1.4 If the Purchasing Entity does not exercise the purchase or renewal option, it will immediately make the Device available to Contractor in as good of condition as when Purchasing Entity received it, except for ordinary wear and tear.

2. **Payment.** The first scheduled payment (as specified in the applicable Order), will be due following the Acceptance of the Device(s), or such later date as Contractor may designate. The remaining payments will be due on the same day of each subsequent month, unless otherwise specified in the applicable Order.

3. **Buyout to Keep Option.** A Purchasing Entity must notify the Contractor or Authorized Dealer, in writing, at least thirty (30) days in advance, if they wish to exercise the Buyout to Keep option on an FMV or Capital Lease. A Buyout to Keep option is not available on a Straight Lease.

4. **Buyout to Return Option.** A Purchasing Entity must notify the Contractor or Authorized Dealer, in writing, at least thirty (30) days in advance, if they wish to exercise the Buyout to Return option on an FMV or Straight Lease, and return the Device to the Contractor in good working condition (ordinary wear and tear excepted).

5. **Device Upgrade or Downgrade**. A Purchasing Entity may do a Device Upgrade or Downgrade on a lease at anytime throughout the term of the lease agreement. The Purchasing Entity and the Contractor shall negotiate the price of the Device Upgrade or Downgrade, but at no time shall the total cost of the Device Upgrade or Downgrade be less than the remaining stream of Device Payments.

6. **Non-appropriation of Funds.** The continuation of any lease agreement will be subject to, and contingent upon, sufficient funds being made available by the Participating State Legislature and/or federal sources. The Purchasing Entity may terminate any such lease

agreement, and Contractor waives any and all claim(s) for damages, effective immediately upon receipt of written notice (or any date specified therein) if for any reason the Purchasing Entity's funding sources are not available.

7. **Assignment.** Purchasing Entity has no right to sell, transfer, encumber, sublet or assign the Device or any lease agreement without Contractor's prior written consent (which consent shall not be unreasonably withheld).

   7.1 Purchasing Entity agrees that Contractor may not sell or assign any portion of Contractor's interests in the Device and/or these Lease Terms or any Order for leases, without notice to Purchasing Entity even if less than all the payments have been assigned. In that event, the assignee (the "Assignee") will have such rights as Contractor assigns to them, but none of Contractor's obligations (Contractor will keep those obligations) and the rights of the Assignee will not be subject to any claims, defenses or set offs that Purchasing Entity may have against Contractor.

   7.2 No assignment to an Assignee will release Contractor from any obligations Contractor may have to Purchasing Entity.

8. **Early Termination Charges**

   Except in the case of Non-appropriation of funds, FMV, $1 Buyout, and Straight Leases shall be subject to an early termination charge, and shall involve the return of the Device (in good working condition; ordinary wear and tear excepted) by the Purchasing Entity to the Contractor. With respect to the Device, the termination charge shall not exceed the balance of remaining Device Payments (including any current and past due amounts), and with respect to Service or maintenance obligations, the termination charge shall not exceed four (4) months of the Service and Supply base charge or twenty-five percent (25%) of the remaining Maintenance Agreement term, whichever is less.

9. **Default.** Each of the following is a "default" under these lease terms:

   9.1 Purchasing Entity fails to pay any payment or any other amount within forty-five (45) days (or as otherwise agreed to in a Participating Addendum) of its due date;

   9.2 Any representation or warranty made by Purchasing Entity in these lease terms is false or incorrect and Purchasing Entity does not perform any of its obligations under these lease terms, and this failure continues for forty-five (45) days (or as otherwise agreed to in a Participating Addendum) after Contractor has notified Purchasing Entity;

   9.3 Purchasing Entity or any guarantor makes an assignment for the benefit of creditors;

   9.4 Any guarantor dies, stops doing business as a going concern, or transfers all or substantially all of such guarantor's assets; or

   9.5 Purchasing Entity stops doing business as a going concern or transfers all or substantially all of Purchasing Entity's assets.

10. **Remedies.** If a Purchasing Entity defaults on a lease agreement, then Contractor, in addition to, or in lieu of, the remedies set forth in the Master Agreement, and Participating Addendum, may do one or more of the following, at the discretion of the Participating

State or Entity:

10.1 Cancel or terminate any or all Orders, and/or any or all other agreements that Contractor has entered into with Purchasing Entity;

10.2 Require Purchasing Entity to immediately pay to Contractor, as compensation for loss of Contractor's bargain and not as a penalty, a sum equal to:

a. All past due payments and all other amounts payable under the lease agreement;

b. All unpaid payments for the remainder of the lease term, discounted at a rate equal to three percent (3%) per year to the date of default; and

c. Require Purchasing Entity to deliver the Device to Contractor per mutual arrangements.

IV. Contractor Responsibilities and Tasks

A. Service Requirements

1. Technicians. All technicians must be factory trained by the OEM and certified to Service the Devices.

2. Standard Service Levels. Participating States and/or Entities may negotiate their own Service Level Agreement (SLA) with the Contractor. The SLA, must, at a minimum, adhere to the following requirements:

2.1 End-User Training

a. Purchasing Entity may request an initial one-hour training session for each Device ordered under the Contract. Contractor shall provide this initial training, free of charge, via one of the following delivery methods: On-site, web-based, or on-line. The delivery method selected for each Device will be at Contractor's sole discretion. Purchasing Entity should be advised that while this initial one-hour of free training shall be provided by Contractor at Purchasing Entity's request, Contractor will not provide substitutions (e.g. free supplies, deeper discounts, etc.) in lieu of this training.

b. Purchasing Entity may also request an additional one-hour training session for technical support, which shall include network connectivity and print driver installation. This additional training shall be provided via a delivery method mutually agreed upon by Contractor and Purchasing Entity, and at a mutually agreed upon price.

c. If Purchasing Entity elects to exercise the training option, then Contractor shall provide the training within ten (10) Business Days of Purchasing Entity's request.

d. Contractor may offer additional on-site, one-hour training sessions for a flat rate fee. Additional charges for travel and per diem, if applicable, must be disclosed to the Purchasing Entity, and mutually agreed upon, prior to Order placement.

e. Contractor must provide on-site or off-site operational training to designated Purchasing Entity personnel, until the personnel are able to operate the

Device independently. Pricing for operational training shall be based on a flat rate fee. Additional charges for travel and per diem, if applicable, must be disclosed to the Purchasing Entity, and mutually agree upon, prior to Order placement.

f. Contractor shall provide Device literature, user-manuals, and access to on-line resources, if available, at no charge to the Purchasing Entity.

g. For Groups A, B, D, E, and Sub-Group D1, Contractor shall provide a no charge, toll-free end-user technical support number that Purchasing Entities can utilize for everyday minor troubleshooting (i.e. this does not include network connectivity or print driver installation). A Purchasing Entity must be able to obtain assistance during Normal Business Hours.

h. Contractor shall provide phone/technical support within two (2) hours of Purchasing Entity's request for assistance, providing such request, and subsequent support, falls within normal business hours.

2.2 Preventative Maintenance. Contractor must perform all Preventative Maintenance Services at the Manufacturer's suggested intervals, or as specified in an Order. Preventative Maintenance shall not be a requirement on desktop Devices.

2.3 Device Performance

a. Device Downtime shall be computed from the time the Contractor is notified of Device failure until the time in which the Device is fully operational.

b. Device Downtime due to lack of consumable Supplies is not acceptable.

c. Contractor must provide daily communication to the Purchasing Entity regarding inoperable Devices, including updates regarding resolution timeframe, and any parts, Accessories, or Devices on back-order.

2.4 Loaner Device. If any Device in Group A or Group B is inoperable for two (2) Business Days, due to Device malfunction, as reasonably determined by Contractor, then Contractor shall provide the Purchasing Entity with:

a. A loaner Device of similar speed and capabilities until such time as the inoperable Device is now operable; or

b. Upon mutual agreement in Urban areas, provide the Purchasing Entity with off-site manned production capabilities, at the sole cost to the Contractor, to accomplish the work of the Device that is inoperable.

2.5 Repair Parts

a. Contractor shall guarantee the availability of repair parts for a minimum of five (5) years after the Purchasing Entity's Acceptance of any Device.

b. All Device components, spare parts, application software, and ancillary Devices that are supplied under any resulting Master Agreement, must conform to Manufacturer specifications.

c. Contractor shall be responsible for ensuring that any repair parts are operable and installed in accordance with Manufacturer specifications.

d. Repair parts may be new, reconditioned, reprocessed or recovered.

2.6 Service Zones

a. Unless otherwise specified in a Participating Addendum, Contractor shall adhere to the following Service Call Response Times based on the distance that their Service Base Location is from the Purchasing Entity:

Service Zone	Definition	Response Time
Urban	Within 60 miles	4 - 6 Hours, and next Business Day for Group D
Rural	60 – 120 miles	1 - 2 Business Days
Remote*	120+ miles, or only accessible by plane or by boat	4 – 5 Business Days

*Additional fees may apply

b. Repair or replacement of parts and/or Devices shall occur within four (4) Business Days of Contractor arriving at Purchasing Entity's location, with the following exception:

i) If Contractor is drop-shipping a new Device to replace a defective Device, then Purchasing Entity must receive the new Device within five (5) Business Days.

c. Contractor(s) may charge different rates according to each Service Zone.

2.7 Service Logs

a. Contractor shall maintain a Service log which describes the maintenance and repair Services provided for each Device.

b. A no-cost copy of Service logs/reports must be provided to the Purchasing Entity or Participating State or Entity, within five (5) Business Days of the request.

2.8 Device Relocation

a. Device relocation Services include dismantling, packing, transporting, and re-installing Device.

b. Contractor may charge for this Service based on the following table:

Service Zone	Distance from current placement of Device	Charge
1	Within the same building	No Charge Allowed*****
2	Up to 50 miles from building in which Device is currently placed	Flat Rate Fee, plus Per Mile or Hourly Fee
3	More than 50 miles from building in which Device is currently placed	Flat Rate Fee, plus Per Mile or Hourly Fee

*Contractor may charge Purchasing Entities a mutually agreed upon price for special rigging in the event a Purchasing Entity's demographics require such rigging for Zone 1 relocations. The price shall be agreed upon in writing by Contractor and Purchasing Entity prior to any Device relocation in Zone 1.

c. Contractor may not charge for any fees incurred due to fuel or tolls.

d. Moves must be performed within thirty (30) calendar days of the Purchasing Entity request. Request may be verbal or written, but Contractor must confirm the request in writing and provide a date that the move will occur. Written confirmation must be sent to the Purchasing Entity within three (3) Business Days of request. In the event that there will be a delay in these Services, Contractor shall communicate with Purchasing Entity and agree on a mutually beneficial time-frame.

e. Contractor is required to offer Device relocation services for all leased Equipment.

3. Meter Read Invoicing

3.1 In order for Contractor to generate accurate invoices, Purchasing Entities shall provide meter reads within the Contractor's requested time-frame.

3.2 Invoices that are generated without receiving the proper meter read information from the Purchasing Entity will not be considered inaccurate.

3.3 The Purchasing Entity shall provide written notice of any such alleged invoicing issue and the Contractor will be allowed a thirty (30) day cure period to address any such issue. During the thirty (30) day cure period, the Purchasing Entity will not be assessed any late fees for failure to submit payment by the invoice due date.

3.4 Failure on the Contractor's part to maintain accurate invoicing shall result in a $25.00 per instance credit on the following month's invoice from Contractor.

4. Reporting

4.1 Service Level Calculations

a. At the discretion of the Participating State or Entity, Contractor shall produce reports that can be measured against the required SLA components.

b. The Participating State or Entity shall determine how the reports will be utilized and whether liquidated damages will be assessed for failure to meet the SLA requirements. Any liquidated damages or penalty structure shall be defined in the Participating State or Entity's Participating Addendum.

4.2 Periodic Reporting. Contractor shall provide periodic reporting to all Purchasing Entities upon request. The reports shall be provided on a quarterly basis, or at the discretion of the Participating State or Entity.

a. The report shall include the following:

i) Number of Service Calls placed;

ii) Response Time per Device;

iii) Dates that Preventative Maintenance was performed, if applicable; and

iv) Estimated end of Useful Life per Device.

b. The report may include, but not be limited to, the following:

i) Location of Devices;

ii) Click usage per Device; and

iii) EPEAT certification level of each Device.

B. Customer Service

1. **Key Personnel.** Contractor shall ensure that staff has been allocated appropriately to ensure compliance with the resulting Master Agreement and subsequent Participating State or Entity requirements and that the individuals occupying the Key Personnel positions have adequate experience and knowledge with successful implementation and management of a national cooperative contract. Contractor shall provide a single point of contact for the following:

   1.1 **Master Agreement Contract Administrato**r – shall be the Lead State's primary contact in regards to Contract negotiations, amendments, Product and Price List updates, and any other information or documentation relating to the Master Agreement;

   1.2 **NASPO ValuePoint Reporting Contact** – shall be responsible for submitting quarterly reports and the quarterly Administrative Fee to the appropriate personnel;

   1.3 **Master Agreement Marketing Manager** – shall be responsible for marketing the resulting Master Agreement, as well as creating Participating State websites, and ensuring that all uploaded data and content is current; and

   1.4 **National Service Manager** – shall be responsible for overseeing the Regional Service Managers, Field Service Technicians, training, and inside Service operations. This position will work with the Lead State Contract Administrator to ensure contractual obligations are met, while providing leadership for the Contractor's operations, as well as strategic planning of the Service department.

2. **Single Point of Contact**. Contractor shall provide a single point of contact for each Participating State, who will handle any questions regarding the Products provided, as well as pricing, delivery, billing, reporting, status of Orders, customer complaints and escalated issues.

3. **Service and Support Hours.** Contractor must provide full Service and support for Products during Normal Business Hours.

4. **Customer Service Team.** Contractor shall also have a designated customer service team who shall be available by phone (via local or toll free number), fax, or email during Normal Business Hours.

5. **Additional Coverage**. Contractor may offer additional coverage beyond Normal Business Hours for any Device that needs to be serviced. Such coverage shall be billed to the Purchasing Entity at an hourly rate.

6. **Online Access**. Customer service representatives shall have online access to account information and be able to respond to inquiries concerning the status of Orders (shipped or pending), delivery, back-orders, pricing, Product availability, Product information, and account and billing questions.

C. Authorized Dealers

1. Contractor can engage Authorized Dealers to provide Products and/or Services.

2. In the event a Contractor elects to use Authorized Dealers in the performance of the specifications, the Contractor shall serve as the primary Contractor, and shall be fully accountable for assuring that their Authorized Dealers comply with the terms and conditions of the resulting Master Agreement, and any Participating Addendum, and shall be liable in the event Authorized Dealers fail to comply with such terms and conditions.

3. Authorized Dealers shall be expected to stay current with Contractor Products, pricing, Master Agreement, and Participating Addendum requirements, and Contractor shall provide training to all of their Authorized Dealers at least once per calendar year, or as otherwise determined by the Lead State.

4. Authorized Dealers shall have the ability to accept Orders from a Purchasing Entity and invoice them directly, unless otherwise stated in a Participating Addendum.

5. Contractor shall send notice to the Lead State, utilizing **Exhibit C, Authorized Dealer Form** and **Exhibit D, Authorized Dealers by State,** within three (3) calendar days of engaging or removing a Dealer.

6. The Lead State reserves the right to deny the addition of any Authorized Dealer and will provide notification to the Contractor with justification as to why the decision was reached. In addition, it will be at the discretion of each Participating State or Entity as to whether they will utilize the Authorized Dealers as approved by the Lead State. Under no circumstances is a Participating State or Entity permitted to use a Dealer that has not been approved by the Lead State.

7. If an Authorized Dealer is performing unsatisfactorily, or is not in compliance with the Master Agreement, then it shall be at the discretion of the Lead State, upon recommendation from the Participating State, to:

   7.1 Require the Dealer to attend remedial training with either the Contractor or the Lead State or;

   7.2 Remove the Dealer from the Contract, or in the case of multiple branch locations in one state, or multiple states, remove them as a Dealer from the location in which they are not in compliance.

D. Device Demonstration Requirements

1. Contractor may offer trial or demonstration Devices for Group A, Group B, Group D, Sub-Group D1, and Group E.

2. Trial or demonstration Devices may be new or used; however, no used, Remanufactured, or Refurbished Devices shall be converted to a purchase or lease.

3. At the discretion of the Participating State or Entity, and upon request by a Purchasing Entity, showroom Devices for Groups A and B may be converted to a purchase or lease, providing the following conditions are met:

3.1 The meter count on Group A and Group B Devices does not exceed 10,000 copies total (i.e. b&w and color combined);

3.2 The Device must be discounted by at least 5% off of the Master Agreement pricing for that same Device; and

3.3 The Purchasing Entity and the Contractor indicate on the Order that the Device is a showroom model.

4. Any trial or demonstration period shall be free to the Purchasing Entity and shall not exceed thirty (30) calendar days.

5. If Purchasing Entity does not make the demonstration Device available for pickup after thirty (30) calendar days, then Contractor may bill the Purchasing Entity for use of Device for each day that it remains at Purchasing Entity's location. Such rates shall not exceed current market standards.

E. Device Installation Requirements

1. Prior to Order Acceptance, Contractor must advise Purchasing Entity of any specialized installation and site requirements for the delivery and installation of Device. This information should include, but is not limited to, the following:

1.1 Air conditioning;

1.2 Electrical;

1.3 Special grounding;

1.4 Cabling;

1.5 Space;

1.6 Humidity and temperature limits; and

1.7 Other considerations critical to the installation.

2. The Purchasing Entity shall be responsible for furnishing and installing any special wiring or dedicated lines.

3. Network installation shall include configuration of the Device for the proper network protocols, and installation of the appropriate print drivers on up to five (5) computers per Device, or as otherwise specified in a Participating Addendum.

4. If applicable, all Devices must be set-up with Preventative Maintenance notifications turned on, and with the most environmentally responsible defaults enabled, including Energy Star saving settings.

5. Contractor may charge for excessive installation requirements, including rigging, access alterations, and access to non-ground floors via stairs. Any such excessive installation charges must be quoted to the Purchasing Entity prior to the signature of any Order, and shall be based on the actual expenditures of Contractor or Authorized Dealer.

6. Contractor or Authorized Dealers shall affix a label or a decal to the Device at the time of installation which shows the name, address, and telephone number of Contractor or Authorized Dealer responsible for warranty Service of the Device.

7. Contractor shall clean-up and remove all debris and rubbish resulting from their work as required by the Purchasing Entity. Upon completion of the work, the premises shall be left in good repair and in an orderly, neat, clean, and unobstructed condition.

F. Security Requirements

1. Network and Data Security

1.1 Devices may be configured to include a variety of data security features. The set-up of such features shall be at the discretion of the Purchasing Entity, and all costs associated with their implementation must be conveyed by Contractor prior to Order placement.

1.2 Contractor will not be permitted to download, transfer, or access print data stored on the Device in either hard drive or chip memory. Only system management accessibility will be allowed.

1.3 Contractor shall ensure that delivery and performance of all Services shall adhere to the requirements and standards as outlined in each Participating State or Entity's Participating Addendum.

2. **Sensitive Information**. Sensitive information that is contained in any Legacy Devices or applications shall be encrypted if practical. In addition, sensitive data will be encrypted in all newly developed applications. Since sensitive information is subjective, it shall be defined by each Participating State or Entity in their Participating Addendum.

3. **Data Breach.** Contractor shall have an incident response process that follows National Institute of Standards and Technology (NIST) standards as referenced in the NIST Computer Security Incident Handling Guide, which can be downloaded at https://www.nest.gov/publications/computer-security-incident-handling-guide, and it shall include, at a minimum, breach detection, breach notification, and breach response. Further, Contractor shall notify the impacted Purchasing Entity within 72 hours of learning of such breach.

4. Authentication and Access

4.1 Any network connected Device must offer authentication for all features via LDAP and/or Windows AD, as well as the ability to disable authentication for any or all features.

4.2 Any network connected Device must have the ability to connect via Dynamic Host Configuration Protocol (DHCP) or Static IP address.

4.3 The credential information for any remote authentication method may not be maintained within the Device's memory.

4.4 Access to the Device's administrative functions must be password protected per the Participating State or Entity requirements, and the default settings must be changed at the time of Device installation.

5. Hard Drive Removal and Surrender

5.1 Contractor shall ensure that all hard drive data is cleansed and purged (if capable) from the Device at the end of its Useful Life, or when any hard drive is repossessed by Contractor; or

5.2 At the Participating State or Entity's discretion, Contractor shall remove the hard drive from the applicable Device and provide the Purchasing Entity with custody of the hard drive before the Device is removed from the Purchasing Entity's location, moved to another location, or any other disposition of the Device. The Purchasing Entity shall then be responsible for securely erasing or destroying the hard drive.

5.3 If Contractor takes possession of any Device at a Purchasing Entity's location, then they shall also remove any ink, toner, and associated Supplies (drum, fuser, etc.) and dispose of them in accordance with applicable law, as well as environmental, and health considerations, or as otherwise specified in a Participating Addendum.

5.4 Hard drive sanitation shall be at no expense to the Purchasing Entity, however; Contractor may charge the Purchasing Entity a fee if the Purchasing Entity elects to keep the hard drive in their possession. Contractor must disclose the price for removal and surrender of the hard drive, prior to Order placement.

5.5 If the hard drive is not removable, or the Device does not contain a hard drive, then Contractor must convey this to the Purchasing Entity at the time of Order placement. In the case of a non-removable hard drive, **section IV.I (5.1)** shall apply.

5.6 If Contractor is removing another Manufacturer's Device, they are not permitted to remove the hard drive. Only the Manufacturer or their Authorized Dealer shall remove hard drives in their own Devices. Contractor shall work with the Manufacturer to ensure the requirements pursuant to this section are met.

G. Contractor Notices. Contractor shall notify the Lead State, Participating States, Participating Entities and all Purchasing Entities of any recall notices, warranty replacements, safety notices, or any applicable notice regarding the Products being sold. This notice must be received in writing (via postal mail or email) within thirty (30) calendar days of Contractor learning of such issues.

DocuSign Envelope ID: C764E410-020D-4DE5-99C8-4C5B8EF55B29

EXHIBIT B – SAMPLE D&A CERTIFICATE

Certificate of Acceptance

Re: Account Schedule Number ("Contract")
Financial Services Provider: Toshiba America Business Solutions, Inc. ("**FS Provide**r")
Lessee/ Customer: ("Customer")

This Certificate of Acceptance to the lease, loan or other form of financial services contract described above ("**Contract**") is by and between the FS Provider identified above and the Customer identified above.

Customer, through its authorized representative, hereby certifies to FS Provider and any assignee of FS Provider with respect to the Contract that:

1. All of the Equipment has been inspected and is (a) complete, (b) properly installed, (c) fully functioning, and (d) in good working order.

2. Customer is not in default under the Contract and all of Customer's statements and promises set forth in the Contract are true and correct.

IN WITNESS WHEREOF, Customer's duly authorized representatives has executed this Acceptance Certificate as of the Acceptance Date.

Customer:

By: _____

Title:

Acceptance Date:

EXHIBIT C – AUTHORIZED DEALER FORM

Manufacturer Name: _____

(Check one)

☐ The Dealer listed below is authorized to provide Products and Services in accordance with the NASPO ValuePoint Multi-Function Devices and Related Software, Services and Cloud Solutions Master Agreement.

☐ The Dealer listed below will no longer provide Products and Services under the NASPO ValuePoint Multi-Function Devices and Related Software, Services and Cloud Solutions Master Agreement for the following reason (required):

_____

_____

_____

State(s) Serviced by Dealer:	
Dealer Name:	
Address:	
Phone (include Toll-Free, if available):	
Contact Person(s):	
Email Address:	
FEIN:	

Signed: _____ Date: _____
(Contractor Representative)

Signed: _____ Date: _____
(Authorized Dealer Representative)

_____
(Print First and Last Name of Authorized Dealer Representative)

DocuSign Envelope ID: C764E410-020D-4DE5-99C8-4C5B8EF55B29

EXHIBIT D – AUTHORIZED DEALERS BY STATE



Exhibit D -
Authorized Dealers by

DocuSign Envelope ID: C764E410-020D-4DE5-99C8-4C5B8EF55B29

ATTACHMENT 1 – TOSHIBA LEASE AGREEMENT TERMS AND CONDITIONS

AGREEMENT FOR LEASE OF EQUIPMENT
a Contract Between

"Lessee"
(NAME, ADDRESS, PHONE OF LESSEE)
and
Toshiba America Business Solutions, Inc.

WHEREAS, Lessee is authorized to lease under the NASPO-ValuePoint Master Agreement ("Master Agreement") and the State of Participating Addendum thereto; and

WHEREAS, it is deemed that the lease of this equipment is both necessary and for the good of Lessee;

NOW, THEREFORE, in consideration of the aforesaid premises, the parties mutually agree as follows:

1. LEASE TERM. This Agreement shall be effective from the date of delivery and acceptance of Leased Equipment for the term set forth on the (i) Attachment 5, Toshiba Lease Order Form and if applicable Attachment 6, Toshiba Lease Order Form Schedule B (collectively an "Order Form"); or (ii) the Lessee's Purchase Order (PO) to which this Agreement is attached, unless sooner terminated by either party as set forth in Section 6 of this Agreement.

2. DEFINITIONS. "**Lease Term**" means the term of this Agreement as set forth in Section 1. "**Leased Equipment**" means the (i) equipment described in the Order Form, attached to this Agreement, and which is incorporated herein; (ii) any replacement equipment provided by Lessor; and (iii) any additional equipment described under subsequent Order Forms agreed to during the term of this Agreement. "**Lessor**" means Toshiba America Business Solutions, Inc. or, if applicable, its permitted assignee.

3. CONSIDERATION (RENT). The parties agree that for the Lease Term, Lessor leases to Lessee the equipment described in, and for the lease payments set forth in, the Order Form, excluding meter charges, late fees and applicable taxes. Except as provided in section 6(c), lessee's payment obligations are absolute and unconditional and are not subject to cancellation, reduction or setoff for any reason whatsoever. Lessee does not agree to reimburse Lessor for expenses, unless otherwise specified in the incorporated documents. Any intervening end to a fiscal period shall be deemed a contract renewal (not changing the overall Agreement term) or a termination as the results of legislative appropriation may be required.

4. POSSESSION, TITLE AND RETURN.

(a) Lessee shall have possession of the Leased Equipment for the Lease Term, unless this Agreement is earlier terminated in accordance with Section 6 below and shall keep such Leased Equipment at the location specified in the Order Form or such other location as Lessor may agree in writing.

(b) Lessor covenants that it has good title to the Leased Equipment, except any intangible property or associated services such as periodic software licenses and prepaid database subscription rights included in the Leased Equipment, if any. If the Order Form indicates that this lease is a Capital (i.e. $1 Buyout) Lease and if this Agreement is deemed to be a secured transaction, Lessee grants Lessor a first priority security interest in the Leased Equipment to secure all of Lessee's obligations under this Agreement, agrees not to permit any other liens on the Leased Equipment, and shall own such Leased Equipment as of the acceptance date and Lessee authorizes Lessor to record a UCC-1 to reflect such interest. At the end of the Lease Term, if Lessee is not in default, Lessor will release any security interest it may have in the Leased Equipment subject to such Capital Lease, which will be retained by Lessee.

(c) At the expiration of the term of this Agreement and provided that the Order Form does not indicate this lease is a Capital Lease, upon Lessee's written request, Lessor shall remove the hard drive from the applicable Device and provide the Lessee with custody of the hard drive before the Device is removed from the Lessor's location. Lessor may charge the Purchasing Entity a fee if the Purchasing Entity elects to keep the hard drive in their possession. The Lessee shall then be responsible for securely erasing or destroying the hard drive. If Lessee is not in breach of this Agreement, all costs of removing and transporting the Leased Equipment at the expiration of the Lease Term shall be the responsibility of Lessor.

(d) Risk of loss of the Leased Equipment rests with Lessor until the Leased Equipment is picked up from Lessee's designated location, at which time risk of loss passes to Lessee.

(e) If the Order Form indicates this lease is a Fair Market Value Lease, at the end of the Lease Term and upon 30 days' prior written notice to Lessor, Lessee may purchase all, but not less than all, of the Leased Equipment AS-IS and WHERE-IS, WITHOUT ANY WARRANTY AS TO CONDITION, TITLE OR VALUE, for the Fair Market Value, plus applicable sales and other taxes, if any.

5. TAXES. Lessee agrees to pay all fees, assessments, taxes and charges governmentally imposed upon Lessor's purchase, ownership, possession, leasing, renting, operation, control or use of the Leased Equipment.

6. TERMINATION.

(a) Termination by Mutual Consent. Any discretionary or vested right of renewal notwithstanding, this Agreement may be terminated upon written notice by mutual consent of both parties.

(b) Termination by Lessee without Cause. This lease may be bought out and all Leased Equipment returned to Lessor, although fair market value leases, operational leases, non-cancelable rentals and capital leases are subject to a termination charge. The termination charge is equal to the balance of unpaid lease payments and other amounts due hereunder (including any current or past due amounts) for leases and with regard to service or maintenance obligations, may not exceed more than four (4) month service and supply base or 25% of the remaining term, whichever is less.

(c) Termination for Nonappropriation. The continuation of this Agreement beyond the current fiscal period is subject to and contingent upon sufficient funds being appropriated, budgeted, and otherwise made available by Lessee's legislature, governing body and/or federal sources. If for any reason Lessee's funding is not appropriated or is withdrawn, limited, or impaired, Lessee may terminate this Agreement, and Lessor waives any and all claim(s) for damages, effective as of the end of the fiscal period in which written notice of such non-appropriation, withdrawal, limitation or impairment is provided by Lessee to Lessor. If Lessee terminates this Agreement because of non-appropriation, withdrawal, limitation or impairment of funds, Lessee will not purchase, lease or rent replacement equipment performing the same functions as the Leased Equipment during the subsequent fiscal period.

(d) Termination for Default or Breach. A default or breach may be declared with or without termination. This Agreement may be terminated by either party upon written notice to the other party for any material breach or default by the other party of any terms, conditions, covenants, or obligations of this Agreement. Notice of termination for breach or default is effective 30 days following service of notice, or upon any subsequent date specified in the notice of termination. Termination by Lessor due to Lessee's material breach or default will be subject to a termination charge, which is equal to the balance of lease payments and other amounts due hereunder (including any current or past due amounts) for leases and may not exceed more than four (4) month service and supply base or 25% of the remaining term, whichever is less, for service and maintenance charges.

7. INSURANCE. At Lessor's request, Lessee shall provide to Lessor proof that the Leased Equipment is covered for the value thereof against property loss or damage while in Lessee's possession by Lessee's program of self-insurance (if approved by Lessor and Lessor's assignee, if any) or a policy of property insurance from a qualified insurer.

8. LOSS OR DAMAGE. If any item of Leased Equipment is lost, stolen or damaged, Lessee will, at Lessee's option and cost, either: (a) repair the item or replace the item with a comparable item reasonably acceptable to Lessor; or (b) pay Lessor the sum of: (i) all past due and current lease payments and other amounts due under this Agreement; (ii) the present value of all remaining lease payments for the effected item(s) of Leased Equipment, discounted at the rate of 6% per annum; and (iii) if this lease is not a Capital Lease, the Fair Market Value of the effected item(s) of Leased Equipment. Upon Lessee's payment to Lessor under clause (b) above, Lessor will then transfer to Lessee all of Lessor's right, title and interest in the effected item(s) of Leased Product AS-IS AND WHERE-IS, WITHOUT ANY WARRANTY AS TO CONDITION, TITLE OR VALUE. "Fair Market Value" means the item's fair market value at the end of the Lease Term, assuming good order and condition (except for ordinary wear and tear from normal use), as estimated by Lessor. No such loss or damage shall relieve Lessee of payment obligations hereunder.

9. WARRANTY AND MAINTENANCE OF EQUIPMENT; WARRANTY DISCLAIMER. All services performed under this Agreement shall be of workmanlike quality, consistent with the standards of the trade, profession or industry. Lessor shall assign to Lessee all manufacturer's warranties on the Leased Equipment, which shall be not less than a full six months' warranty. Lessor shall be responsible for ongoing service and maintenance of the Leased Equipment for the duration of the Lease Term. EXCEPT AS OTHERWISE STATED HEREIN, LESSOR MAKES NO WARRANTY EXPRESS OR IMPLIED, INCLUDING THAT THE LEASED EQUIPMENT IS FIT FOR A PARTICULAR PURPOSE OR THAT THE LEASED EQUIPMENT IS MERCHANTABLE. Lessee acknowledges that none of Lessor or their representatives are agents of any assignee and none of them are authorized to modify the terms of this lease or on any Schedule. No representation or warranty of Lessor with respect to the Leased Equipment will bind any assignee, nor will any breach thereof relieve Lessee of any of its obligations hereunder. THIS LEASE AGREEMENT AND EACH SCHEDULE CONSTITUTES A "FINANCE LEASE" AS DEFINED IN ARTICLE 2A OF THE UNIFORM COMMERCIAL CODE (the "UCC"). Lessee agree that any manufacturer or Lessor warranty or service agreement is a separate and independent obligation of Lessor to Lessee, that no assignee of the Lessor shall have any obligation to Lessee with respect to such warranty or service agreement and that Lessee's obligations

under this Agreement are not subject to setoff, withholding, reduction, counterclaim or defense for any reason whatsoever including, without limitation, any claim Lessee may have against Supplier.

10. LESSOR REMEDIES. If Lessee default, Lessor may do one or more of the following: (a) recover from Lessee, as liquidated damages for loss of bargain and not as a penalty, the sum of: (i) all past due and current lease payments and other amounts due under this Agreement; (ii) the present value of all remaining lease payments, discounted at the rate of 6% per annum; and (iii)) require Lessee to make the Leased Equipment available to Lessor for pickup at Lessee's premises (and Lessee shall be responsible for removing all data as provided in Section 4) and to pay all costs of removing and transporting the Leased Equipment; (c) charge Lessee for expenses incurred in connection with the enforcement of Lessor's remedies. If Lessor picks up the Leased Equipment, Lessor may sell, release or otherwise dispose of the Leased Equipment and apply the proceeds, less reasonable selling and administrative expenses, to the amounts due by Lessee. These remedies are cumulative, in addition to any other remedies provided by law, and may be exercised concurrently or separately. Any failure or delay by Lessor to exercise any right shall not operate as a waiver of any right. LESSOR SHALL NOT BE LIABLE FOR CONSEQUENTIAL, INDIRECT, INCIDENTAL OR SPECIAL DAMAGES.

11. PROPER AUTHORITY. The parties hereto represent and warrant that the person executing this Agreement on behalf of each party has full power and authority to enter into this Agreement. Any services performed by Lessor before this Agreement is effective or after it ceases to be effective are performed at the sole risk of Lessor.

12. LESSEE REPRESENTATIONS. Lessee represents that: (a) this Agreement and any documents required to be delivered in connection with this Agreement (collectively, the "Documents") have been duly authorized by Lessee in accordance with all applicable laws, rules, ordinances and regulations; (b) the Documents are valid, legal, binding agreements, enforceable in accordance with their terms and the person(s) signing the Documents, if applicable, have the authority to do so, are acting with the full authorization of Lessee's governing body, and hold the offices indicated below their signatures; (c) the Leased Equipment is essential to the immediate performance of a governmental or proprietary function by Lessee within the scope of Lessee's authority and shall be used during the Lease Term only by Lessee to perform such function; (d) Lessee intends to use the Leased Equipment for the entire Lease Term and shall take all necessary action to include in Lessee's annual budget any funds required to fulfill Lessee's obligations each fiscal period during the Lease Term; (e) Lessee has complied fully with all applicable law governing open meetings, public bidding and appropriations, required in connection with this lease and the debt under applicable state law; (f) unless this lease is a Capital Lease, Lessee's obligations to remit Lease Payments constitutes a current expense and not a debt under applicable state law; (g) this Agreement is binding on Lessee and Lessee's successors and assigns; and (h) all financial information Lessee has provided is true and a reasonable representation of Lessee's financial condition.

13. ASSIGNMENT. Lessee may not assign or dispose of any rights or obligations under this Agreement or sublease the Leased Equipment without Lessor's prior written consent. Notwithstanding anything in the NASPO ValuePoint Master Agreement and/or the Participating Addendum to the contrary, Lessor may assign all or any portion of this Agreement or its interest in the Leased Equipment; provided that service obligations on the Leased Equipment shall remain with Toshiba America Business Solutions, Inc. and expressly not with Lessor's assignee and must conform to the terms of the NASPO ValuePoint Master Agreement and the State of Participating Addendum. Lessor's assignee shall have Lessor's rights under this Agreement, but none of Lessor's obligations. Lessee agrees not to assert any claims, defenses or offsets it may have against Lessor against such assignee.

14. AGREEMENT AND MODIFICATION. This Agreement is made pursuant to the NASPO ValuePoint Master Agreement identified above, and the State of Participating Addendum to that Master Agreement, the terms of which are incorporated herein by reference. In the event of conflict between the Master Agreement or the State of Participating Addendum and this Agreement, the Master Agreement and the Participating Addendum shall govern and control. Unless otherwise expressly authorized by the terms of this Agreement, no modification or amendment to this Agreement shall be binding upon the parties, unless the same is in writing and signed by the respective parties hereto.

15. TIME PRICE. If the Toshiba Lease Order Form and Schedule indicates the lease is a Capital Lease, Lessee understands that the Leased Equipment may be purchased for cash (the "Product Cost") or purchased pursuant to this Agreement for an amount of each Lease Payment times the number of Lease Payments, less maintenance, as set forth on the NASPO Lease Order Form and Schedule and this Agreement, plus the $1 Purchase Option amount stated on the NASPO Lease Order Form and Schedule, and by signing this Agreement, Lessee has chosen to purchase the Leased Equipment for that price. The Product Cost may be determined by dividing the Lease Payment by the lease rate factor set forth on the NASPO Lease Order Form and Schedule. Each Lease Payment under a Capital Lease includes a part of Lessor's investment in the Product Cost and a return on Lessor's investment in the Capital Lease. The total return on Lessor's investment (the total finance charge) is determined by deducting the Product Cost (as determined above) from the Time Price. The difference so determined is the return to Lessor on its investment (the total finance charge). The rate of return (finance rate) may be determined by applying to the Product Cost, the rate that will amortize the Product Cost down to the Purchase Option amount by applying as payments, the Lease Payments. For purposes of that amortization, each Lease Payment will be considered received on the date it is required to be paid under this Agreement.

16. GOVERNING LAW, JURY TRIAL WAIVER. This Agreement and the rights and obligations of the parties hereto shall be governed by, and construed according to, the laws of the State of , without giving effect to any principle of conflict of laws that would require the application of the law of any other jurisdiction. BOTH PARTIES AGREE TO WAIVE ALL RIGHTS TO A JURY TRIAL WITH RESPECT TO THIS AGREEMENT AND THE LEASED EQUIPMENT.

17. NOTICE. All notices or other communications required or permitted to be given under this Agreement shall be in writing and shall be deemed to have been duly given if (a) delivered personally in hand, (b) delivered by telephone, facsimile or email with simultaneous regular mail, or (c) mailed certified mail, return receipt requested, postage prepaid on the date posted, and addressed to the other party at the address specified above or such other address as the other party may have provided written notice of in accordance with this Section 17. For purposes of computing times from service of notice, service of notice by delivery in hand shall be effective on the date of delivery; notices that are mailed shall be effective on the third calendar day following the date of mailing.

18. RESERVED.

19. ELECTRONIC DOCUMENTATION. This Agreement may be executed in counterparts and signed by the parties manually or electronically. The executed counterpart that has Lessor's original signature and/or is in Lessor's possession shall constitute chattel paper as that term is defined in the UCC and shall constitute the original agreement for all purposes. If Lessee transmits this Agreement to Lessor by facsimile or other electronic transmission, the transmitted copy shall be binding upon the parties. Neither party may raise as a defense to the enforcement of this Agreement that it was signed or transmitted electronically.

IN WITNESS WHEREOF, the parties hereto have caused this Agreement to be signed and intend to be legally bound thereby.

LESSOR:
Toshiba America Business Solutions, Inc.

Name:
Title:
Date:

LESSEE:

By: _____
Name:
Title:
Date:

ATTACHMENT 2 – TOSHIBA SERVICE LEVEL AGREEMENT

TOSHIBA

1. Customer Level SLA

1.1. Purpose

The purpose of this Attachment is to outline service levels; as well as provide Customer with a defined process for equipment replacement or loan as set forth herein.

1.2. Customer Service Level Agreement

Contractor agrees to maintain the following service levels defined below as targets:

Performance Criteria	Target Level
Average Uptime	96% or Better
Average On-Site Response Time	4 Hours or Less

1.3. Total Quality Commitment (TQC)

1.3.1. Free Replacement - If Buyer's Toshiba MFD, Facsimile or its accessories, do not operate within Toshiba's product specifications during the term of its lease or if purchased its maintenance service term, and if the equipment cannot be repaired to perform within product specifications, Contractor will replace the MFD, facsimile or accessory at no charge with a model of equal or better features and specifications.

1.3.2. Free Loaner:

1.3.2.1. If Customer's Toshiba MFD is out-of-service more than two (2) consecutive business days after notifying a Contractor's Authorized Servicing Provider or requires off-site service, a loaner MFD will be provided by the Contractor Authorized Servicing Provider at no additional charge.

1.3.2.2. All loaned equipment is the property of Contractor or the Contractor's Authorized Servicing Provider and must be returned to Contractor or the Contractor's Authorized Servicing Provider at the time the repaired or replaced equipment is tendered.

1.3.3. Term of Program.

The term of this program is (i) for purchased equipment, three years from equipment installation date or maximum number of copies as stated in the product specifications, whichever occurs first; or, (ii) for leased or rented equipment, the length of the original lease or rental term starting from the equipment installation date or the maximum number of copies as stated in the product specifications, whichever occurs first.

1.3.4. Terms & Conditions Of TQC

This program applies only to new Toshiba MFD and/or accessories acquired by customers from Toshiba or an Contractor Authorized Servicing Provider on or after April 1, 1996, on condition that the equipment: (i) was continuously maintained under a full service maintenance agreement provided by an Authorized Toshiba Servicing Provider, and (ii) only genuine Toshiba parts and consumable supplies are used in the maintenance and operation of the equipment. This program is non-transferable. Product damaged or destroyed because of Buyer's negligence, misuse or abuse, improper electrical power, or an act of God are not covered under this program.

If a Contractor Authorized Servicing Provider is not available to fulfill the terms of this program, Toshiba will

DocuSign Envelope ID: C764E410-020D-4DE5-99C8-4C5B8EF55B29

resolve any program issues within a reasonable period of time. No modification or extension of this program is effective unless it is in writing and signed by the Vice President, General Manager of Toshiba-Electronic Imaging Division.

1.3.5. How To Exercise This Guarantee

First, notify your Authorized Toshiba Servicing Provider of the problem. If you do not obtain resolution to your satisfaction via your Authorized Toshiba Servicing Provider, send a certified letter documenting your problem and a copy of the dated sales receipt to:

Toshiba America Business Solutions, Inc.
Director of Field Service
25530 Commercentre Boulevard
Lake Forest, California 92630

ATTACHMENT 3 – TOSHIBA MAINTENANCE AGREEMENT

TOSHIBA	MAINTENANCE AGREEMENT Attachment 3
	Administered by the State of Colorado #RFP-NP-23-001

These maintenance terms are pursuant to a Participating Addendum under NASPO ValuePoint Master Agreement administered by the State of Colorado #RFP-NP-23-001 (the "Master Agreement"). By accepting this Attachment, Customer agrees to purchase the services as set forth in the Maintenance Order Form. Contractor agrees to provide parts, labor, ink, toner, and toner collection containers (the "Maintenance Services") for the equipment listed in Attachment 5, Toshiba Lease Order Form in accordance with the terms and conditions of the Master Agreement and the Maintenance Agreement Terms below.

MAINTENANCE AGREEMENT TERMS

1. **TERM:** Each asset shall be annually renewable on each yearly anniversary date for an additional one (1) year period. Contractor shall notify Customer in writing of any such pending anniversary date no later than ninety (90) days prior to such date, and Customer shall have until thirty (30) days prior to such date to notify Contractor in writing that it wishes to renew the term for an additional year in order for such renewal to take effect.

2. For each piece of equipment under this Maintenance Agreement there will be a Start Date & Start Meter. Service for each piece of equipment will be provided from the Start Date & Start Meter until this Maintenance Agreement is terminated or the equipment is withdrawn from service.

3. **REMOVAL FROM SERVICE.** Customer may withdraw individual equipment by providing thirty (30) day written notice prior to the Renewal Date. Customer is responsible for all remaining Minimum Payments if Customer is in default or if equipment is withdrawn prior to Renewal Date.

4. **INVOICING CHARGES.** Customer will pay the charges set forth in the Toshiba Lease Order Form. The first Minimum Payment is due upon receipt of an invoice. Thereafter, Minimum Payments will be due on the same date each month during the Term of this Maintenance Agreement whether or not Customer receives an invoice. Customer's obligation to pay the Minimum Payment is unconditional and is not subject to any reduction, set-off, defense, or counterclaim for any reason whatsoever. Excess click charges or Overage Charges, as applicable; will be invoiced monthly for the period selected on the Maintenance Order Form.

5. If any part of a payment is not made by the Customer when due, Customer agrees to pay Contractor a Late Charge pursuant to the terms of the Master Agreement.

6. Contractor may estimate the number of clicks used if requested Meter Readings are not received before a new billing period begins. Contractor will adjust the estimated charge for overage clicks upon receipt of actual Meter Readings. Notwithstanding any adjustment, the Customer will never pay less than the Minimum Payment. Customer will provide meter readings via an automated website.

7. **CONSUMABLE SUPPLIES**. All supplies delivered as part of this Maintenance Agreement remain the property of Contractor until and unless they are consumed by the equipment in the performance of this Agreement. Any supplies not consumed as specified and not surrendered to Contractor upon expiration or termination of the Maintenance Services for an asset will be invoiced to the Customer at Contractor's then current Master Agreement prices. Customer agrees to provide insurance coverage for supplies in case of loss under any circumstances. Notwithstanding the foregoing, the risk of loss of the consumable supplies shall be transferred from Contractor to Customer if such consumable supplies are stored at Customer's facility.

8. **TAXES**. Unless Tax Exempt (as evidenced by certificate or in the case of exempt sales to federal, state, and local government entities a seller may also document the exemption by retaining a copy of a government issued purchase order, government check or voucher in place of the exemption certificate). In addition to the charges due under this

Maintenance Agreement, the Customer agrees to pay amounts equal to any taxes resulting from this Maintenance Agreement, or any activities hereunder, exclusive of taxes based upon net income.

9. **INSTALLATION AND ACCESS TO EQUIPMENT.** Customer agrees to provide adequate space, environment and appropriated electrical requirements including, if required, a dedicated 120 volt or 220 volt electrical line, as published in the Operator and Service Manuals for the operation and maintenance of the equipment. If Contractor has installed a power filter/surge protector on the equipment, it must at all times remain continuously installed. If it is removed Customer agrees to purchase a replacement from Contractor immediately. Contractor shall have full and free access to the equipment to provide service thereon.

10. If persons other than Contractor representatives install conversions, feature additions, accessories or perform service on equipment and as a result further repair by Contractor is required, such repairs shall be made at Contractor's applicable Time and Material rates and terms then in effect, per the Master Agreement pricing. If such additional repair is required, Contractor may immediately withdraw the equipment from this Maintenance Agreement.

11. **KEY OPERATOR - END-USER TRAINING.** Customer agrees to designate a Key Operator for training on the use, supplications and features of the equipment. The Key Operator will be responsible for normal Key Operator activities as detailed in the Operations Manual and for training additional end-user. If the Key Operator assignment changes, Customer agrees to designate a new Key Operator immediately. Contractor agrees to provide training for the designated Key Operator and to provide initial training for end-users on the use, applications and features of the equipment. Additional training requested by Customer will be at Contractor Master Agreement hourly rates.

12. **EXCLUSIONS.** Service under this Maintenance Agreement does not include:
    - **a.** Furnishing paper, staples (unless purchased by the Customer), replacement print heads, batteries, ribbons, media, periodic maintenance on thermal printers or any of the following:
    - **b.** Service of equipment if moved outside of Contractor's designated service area;
    - **c.** Repair of damage or increase in service time caused by accident, misuse, negligence, abuse or disaster;
    - **d.** Service of accessories, attachments or click control devices other than those of the same manufacturer as the equipment;
    - **e.** Painting or refinishing of the equipment;
    - **f.** Making specification changes;
    - **g.** Performing key operator functions as described in the operator manual;
    - **h.** Moving equipment, repair of damage or increase in service time caused by the use of the equipment for other than the ordinary use for which designed;
    - **i.** Repair of damage caused by electrical surges or lightning strikes, if equipment is connected to a Contractor supplied power filter/surge protector repairs will be included;
    - **j.** Repair of damage or increase in service time caused by failure to continually provide a suitable installation environment as defined by the manufacturer, with all the facilities prescribed by Contractor including, but not limited to, adequate space, electrical power, air conditioning or humidity control
    - **k.** Repair of equipment that has been designated as obsolete by the manufacturer and genuine OEM parts are no longer available.
    - **l.** Repair of damage or increase of service time caused by Customer's use of media outside the specifications as described in the operator manual.

13. This Maintenance Agreement is not assignable, its right, duties and obligations may not be assigned or transferred by the Customer without the prior written consent of Contractor. Any attempt to assign or transfer any of the rights, duties or obligations of this Maintenance Agreement without such consent is void. Contractor's service provided outside the scope of this Maintenance Agreement will be furnished at Contractor's applicable time and material rates and terms then in effect. Contractor is not responsible for failure to render service due to causes beyond its control.

DocuSign Envelope ID: C764E410-020D-4DE5-99C8-4C5B8EF55B29

ATTACHMENT 4 – TOSHIBA $1 BUYOUT LEASE ADDENDUM

Addendum to Agreement number between , as Lessor and , as Lessee

Provided the lease has not terminated early, Lessee shall have the following option at the end of the original term.

Buy: Purchase the equipment for $1.00.

OR

Return: Return the equipment per the lease agreement.

LESSOR

Signature

Title

Date

LESSEE

Signature

Title

Date

NOTE: SIGNATURE MUST BE SAME AS ON LEASE

ATTACHMENT 5 – TOSHIBA LEASE ORDER FORM

LESSEE - BILLING CONTACT INFORMATION (Separate Order Form must be completed for each billing locations.)			
Lessee Legal Name:	Department Name:		FEIN#
Street Address I P.O. Box:			Bldg/Room/Suite:
City:	State:	Zip	Billing Contact Name:
Bill-To Phone Number:	Email:		Fax Number:

LESSEE INSTALLATION LOCATION			
Lessee Legal Name:			Department Name:
Street Address I P.O. Box:			Bldg/Room/Suite:
City:	State:	Zip:	Contact Name:
Phone Number:	Email:		Fax Number:

EQUIPMENT LEASE WITH SEPARATE MAINTENANCE PLAN

	EQUIPMENT LEASE TYPE	LEASE TERM
	☐ Fair Market Value ☐ Capital Lease ☐ Straight Lease	☐ 24 Mo ☐ 36 Mo ☐ 48 Mo ☐ 60 Mo

ITEM DESCRIPTION (If insufficient space, use Schedule A to this Lease Order form and enter below "See Order Form Schedule")	EQUIPMENT LEASE		MAINTENANCE & SERVICES (M&S) PLAN ☐ Include Staples						
	EQUIPMENT LEASE % or RATE- FOR $OUT LEASES ONLY	EQUIPMENT LEASE PAYMENT	ZERO BASE B&W CPC	ZERO BASE COLOR CPC	MAINT. OPTION NUMBER 1, 2, 3	MONTHLY VOLLUME (BW)	MONTHLY BASE CHARGE (BW)	BW OVERAGE RATE	COLOR OVERAGE RATE
		$					$		
		$					$		
		$					$		
		$					$		
		$					$		
		$					$		
		$					$		
		$					$		
		$					$		

Sum of Monthly Equipment Lease Payments: $_____ **Sum of Monthly Base Charges:** $

TOTAL MONTHLY PAYMENT: Equipment Lease Payment + Monthly Base Charge (If Applicable) $_____ **Personal Property Tax Required** ☐

NASPO ADMIN FEE RATE: 0.25% **STATE ADMIN FEE RATE (If Applicable):**

Special Instructions/Additional Information (e.g. equipment models upgraded; Buyout details; etc.):

TERM & PAYMENT SCHEDULE (All Payments are exclusive of sales and use tax)

Sales/Use Tax Exempt ☐ Yes ☐ No **Tax-Exempt No.** **[Attach Tax Exemption]** **PO Issued ☐ yes ☐ No** **PO #**

Payment Cycle: **Monthly Billing** ***Document Fee:*** **$75.00 included in the 1st invoice**

THIS ORDER FORM INCORPORATES ALL OF THE TERMS AND CONDITIONS OF THE LEASE AGREEMENT

	LESSOR: Toshiba America Business Solutions, Inc. **SIGNATURE:**	**Title:**	**Date:**
	LESSEE: **SIGNATURE**	**Title:**	**Date:**

ATTACHMENT 6 – TOSHIBA LEASE ORDER FORM SCHEDULE

LESSEE _____

Schedule B to NASPO Lease Order Form - EQUIPMENT LEASE WITH SEPARATE MAINTENANCE PLAN

v011119

This Schedule is solely for use with NASPO ValuPoint Participating Addendum only and should accompany the Lease Order Form
For Use with Colorado #RFP-NP-18-01 only

☐ INCLUDE STAPLES:

												MAINTENANCE PLAN				
DEPT. NAME	DIV NAME / CODE	STREET ADDRESS	FLOOR	ROOM / SUITE	CITY	ST	ZIP	PO #	TOSHIBA MODEL	CONFIGURATION SUMMARY / ITEM DESCRIPTION	EQUIPMENT LEASE PAYMENT (with PPT)	No Base Plan, Only CPC for Usage	MAINT. OPTION 1, 2 OR 3	INCLUDED BASE NUMBER OF COPIES	MAINT. MONTHLY BASE CHARGE	B&W OVERAGE RATE	COLOR OVERAGE RATE
EXAMPLE	*10001*	*123 East Main Street*	*2nd Floor*	*201*	*Arlington*	*TX*	*76210*		*Toshiba e-Studio 6560C*	*A4 COLOR/B&W System*	*$ 284.56*	*n/a*	*2*	*25,000*	*$ 137.50*	*$0.0055*	*$0.0300*
														0			
														0			
														0			
														0			
														0			
														0			
														0			
														0			
														0			
														0			
														0			
														0			
														0			
														0			
														0			
														0			
														0			
														0			
														0			
														0			
														0			
										Total Monthly Equipment Lease Payment:	$ -			Tot. Mo Base Chrg:	$ -		

TOTAL MONTHLY PAYMENT (Total Monthly Equipment Lease Payment + Total Mo Base Charge:	$0.00

This Schedule to the NASPO Lease for Equipment and Maintenance Order Form incorporates all of the Terms and Conditions of the Lease Agreement.
Capitalized terms not defined herein shall have the same meaning as defined in the PA and/or the Agreement for Lease of Equipment.

LESSEE	LESSOR: Toshiba America Business Solutions, Inc.
By: _____	By: _____
Name: _____ (Please Print)	Name: _____ (Please Print)
Title: _____	Title: _____
Date: _____ (date of signature)	Date: _____ (date of signature)

ATTACHMENT 7 – TOSHIBA AMENDMENT TO OPT OUT

This Amendment amends that certain Lease Agreement for use with the Participating Addendum between Toshiba America Business Solutions, Inc. and (the "PA") under NASPO ValuePoint Master Terms and Conditions for Multi-Function Devices and Related Software, Services, and Cloud Solutions with Colorado as Lead State #RFP-NP-23-001 (the "Master Agreement"), dated as of , 20 . All capitalized terms used in this Amendment which are not otherwise defined herein shall have the meanings given to such terms in the Master Lease or PA.

WHEREAS, Lessee and Lessor executed that certain the Lease Agreement, which provides for non-appropriation of funds in Section 6(c) thereof,

WHEREAS, Lessee is not a state or local governmental entity;

NOW THEREFORE, the parties agree that the Lease Agreement is amended as follows:

(1) Section 6 (c) is deleted in its entirety and Section 6 (d) is renumbered "Section 6 (c)".

(2) The following is added as Section 6 (d):

"(d) Upon acceptance, subject to the foregoing termination provisions, your obligations under the Lease Agreement will become absolute and unconditional, and are not subject to cancellation, reduction or setoff for any reason whatsoever."

Except as specifically amended herein, all other provisions of the Lease Agreement shall remain in full force and effect.

IN WITNESS WHEREOF, the parties have caused this Amendment to be executed by their duly authorized representatives as of the date of the Lease Agreement.

TOSHIBA FINANCIAL SERVICES, Lessor	**, Lessee**
By:	By:
Name:	Name:
Title:	Title:

ATTACHMENT 8 – TOSHIBA OPINION OF COUNSEL

(LETTERHEAD OF LESSEE'S / CUSTOMER'S COUNSEL)

(Date)

RE: (the "**Lease / Agreement**") dated , 20 between ("**Lessee / Customer**") and , its successors and assigns ("**Lessor / Owner**")

Gentlemen and Ladies:

I have acted as counsel to Lessee / Customer in connection with the execution and delivery of the Lease / Agreement by Lessee / Customer and, in this capacity, I have reviewed a duplicate original or certified copy of the Lease / Agreement and such other documents and instruments as I have deemed necessary or appropriate. As counsel for Lessee / Customer, I have made such factual inquiries, and have examined or caused to be examined such questions of law as I have considered necessary or appropriate for the purposes of this opinion. Based on such inquiries, examination and review, I am of the opinion that:

(a) Lessee / Customer is the entity indicated on the face of the Lease / Agreement and is a political subdivision of the state in which it is located. Lessee / Customer is duly organized and existing under the Constitution and laws of said state and is authorized to enter into and to carry out its obligations under the Lease / Agreement.
(b) The Lease / Agreement has been duly authorized, executed and delivered by Lessee / Customer in accordance with all applicable laws, rules and regulations. The Lease / Agreement is a valid, legal, binding agreement, enforceable in accordance with its terms, except as limited by laws of general application affecting the enforcement of creditors' rights. The person signing the Lease / Agreement (1) has the authority to do so, (2) is acting with the full authorization of Lessee's / Customer's governing body, and (3) holds the office indicated below their signature. The signature of the person signing the Lease / Agreement is genuine.
(c) The Lease / Agreement does not constitute a debt of the Lessee / Customer under applicable state law or a pledge of the tax or general revenues of the Lessee / Customer.
(d) Lessee / Customer has complied fully with all applicable law governing open meetings, public bidding and appropriations required in connection with the Lease / Agreement and the acquisition of the Equipment.
(e) The execution of the Lease / Agreement and the appropriation of funds to meet its obligations thereunder do not result in the violation of any constitutional, statutory or other limitation relating to the manner, form or amount of indebtedness which may be incurred by Lessee / Customer.

[LESSEE / CUSTOMER COUNSEL]

By: _____

DocuSign Envelope ID: C764E410-020D-4DE5-99C8-4C5B8EF55B29

TOSHIBA

NASPO MAINTENANCE & SERVICES ACTIVATION SCHEDULE

CUSTOMER INFORMATION

Customer Purchase Order Number	Date	FSM Number (Internal)	NASPO Customer No.

Maintenance Agreement Term	Agreement Term
2 year ☐ 3 year ☐ 4 year ☐ 5 year. ☐	Start Date End Date

BILL TO INFORMATION

Customer Name Department		
Street		
City	State	Zip Code
Contact Name	Fax Number	
Telephone Number	Fax Number	

EQUIPMENT LOCATION

Customer Name Department		
Street		
City	State	Zip Code
Contact	Fax Number	
Telephone Number	Fax Number	

BILLING INFORMATION

Billing Cycle	Billing Performed by
☐ Monthly ☐ Other	☐ **Toshiba bills the customer;** ☐ **Other**
Billing Format	
☐ Per Machine ☐ Consolidated Bill (Grouped by ☐ De-Centralized Billing (**Each billing entity must sign separate Maintenance**	
Additions will be: ☐ Coterminous ☐ Other	Tax Exempt *(if multiple locations, indicate on P.O. for each state)* ☐ No ☐ Yes If YES, Certificate Number:
Meter Read **Submitted By Customer**: E:bridge ☐ FMAudit ☐ E:meters online (Web) ☐	Customer P.O. Required? (If Yes, Attach Purchase Order) No ☐ Yes ☐ PO Number
Special Instructions:	

CUSTOMER SIGNATURE

Signature on this page indicates acceptance of the Maintenance Plan set forth on Page 2 of this Order and all terms and conditions as stated in the NASPO Master Contract and State Participating Addendum.

Name		**Title**	
Signature		**Date**	

Maintenance & Services Activation Schedule for Purchased Equipment v011119 Document A06

DocuSign Envelope ID: C764E410-020D-4DE5-99C8-4C5B8EF55B29

NASPO-Toshiba Document #A06

NASPO MAINTENANCE & SERVICES ACTIVATION SCHEDULE – Page 2

ZERO BASE PLAN or
OPTIONAL MONTHLY BASE CHARGE WITH OVERAGES PLAN

Staples Included
☐ Yes ☐ No

		Option 1				Option 2				Option 3			
		Monthly Volume	Monthly Base Charge	Overage Rate		Monthly Volume	Monthly Base Charge	Overage Rate		Monthly Volume	Monthly Base Charge	Overage Rate	
Model	Zero Base M&S Rate	B&W	B&W	Color	B&W	B&W	B&W	Color	B&W	B&W	B&W	Color	B&W

CUSTOMER SIGNATURE:

Name		**Title**	
Signature		**Date**	

ATTACHMENT 10 – TOSHIBA SAMPLE MPS STATEMENT OF WORK

Toshiba will provide to Customer throughout the United States, the Services outlined in this Statement of Work during the Initial Term and Renewal Terms. This SOW sets forth the scope of managed print services, requirements and obligations of the parties and is subject to the terms and conditions of a Managed Print Services Agreement ("Agreement") by and between Customer and Toshiba America Business Solutions, Inc. ("Toshiba"), and will be incorporated therein by reference.

1. Assessment Phase

1.1. Initial Assessment and Design

1.1.1. Toshiba's responsibilities are to:

1.1.1.1. Work with Customer to determine the scope and discovery to include sites and device types

1.1.1.2. Develop a schedule for discovery and design

1.1.1.3. Work with Customer to ascertain any security and safety requirements

1.1.1.4. Work with Customer to obtain necessary badging requirements

1.1.1.5. Use Toshiba meter collection software, a network discovery tool, when necessary to facilitate and augment the discovery process

1.1.1.6. Identify and confirm equipment

1.1.2. Customers responsibilities are to:

1.1.2.1. Provide a local onsite customer liaison to work with Toshiba at each site to assist with prioritization, coordination and communication of discovery

1.1.2.2. Provide the computer hardware necessary to operate the software

1.1.2.3. Provide the IP address, queue names, and any other network address required to perform Services

1.1.2.4. SNMP enable the networked equipment

1.1.2.5. Provide a specific list and location (name, address, building, floor, city, state, zip code, serial number, model number) for all meterable equipment

1.1.2.6. Provide any necessary access to floorplans and business areas

1.1.2.7. Provide and be responsible for all such telephone and modem lines, telephones, computers and peripheral devices, computer connections, and network access, as may be necessary for Toshiba to provide Services and to interconnect with Toshiba's network discovery and meter submission tool;

1.1.2.8. Provide Toshiba with current-state print device information to include: print queue names, device configuration, custom form, and IP addresses or host names for devices accepting print jobs from host or mainframe applications. Customer shall have the flexibility to direct output.

1.1.3. Following discovery and design, Toshiba and Customer will mutually agree by location upon

1.1.3.1. The number and models of devices within the scope of Services

1.1.3.2. Fleet configuration, optimal mix, and future-state design including the placement of new Product and retention of Existing Equipment

2. Implementation Phase

2.1. Toshiba and Customer shall:

2.1.1. Toshiba's responsibilities consist of:

2.1.1.1. Maintain an Asset List of all Meterable equipment

2.1.1.2. Coordinate with Customer any network and phone installations needed to support new devices

2.1.1.3. Create and distribute Toshiba asset tags for all equipment having the following necessary information to facilitate a Help Desk calls for networked equipment and supply provisioning for equipment:

- Toshiba's Supplies Ordering Web Portal URL
- Serial Number or Asset Tag
- Toll Free Phone Number or Web URL for Service Dispatch

2.2. Customer's responsibilities consist of:

- Affix asset tags to all equipment and remove any previous service provider asset tags

- Provide and be responsible for all such telephone and modem lines, telephones, computers and peripheral devices, computer connections, and network access, as may be necessary for Toshiba to provide Services and to interconnect with Toshiba's network discovery and meter submission tool

3. Training

3.1. Customer may engage Toshiba to provide a customized training program by working with Toshiba to develop a Training Plan and order such plan via an MPSA Order Form and Training Plan Schedule.

4. Fleet Management.

Within ninety (90) calendar days following the Effective Date, Toshiba shall develop and thereafter maintain a comprehensive inventory of all Equipment that is discovered through Toshiba's electronic discovery tool: (a) equipment and network connections and infrastructure used by Toshiba to provide the services; (b) equipment, software and network connections and infrastructure used by Customer in connection with the Services. Toshiba shall provide an electronic copy of such inventory to Customer upon request.

5. Services & Help Desk

5.1. In general, Toshiba is responsible for providing Services for Customer's networked Equipment identified through Toshiba's remote electronic discovery tool.

5.2. Toshiba's responsibilities include:

- To troubleshoot for the repair of the equipment and to attempt a phone resolution if one is available
- To provide on-site break fix services for technical hardware issues that cannot be resolved remotely
- Toshiba will provide all the support and materials necessary to maintain covered Existing Equipment in operating condition
- To bear financial responsibility for all time, material, and travel associated with break / fix activities
- Next business day break-fix service: Toshiba shall provide response times for new Toshiba Product within 4-8 hours, and shall average an on-site response to a service call within four (4) business hours. For other non-Toshiba new Product, Toshiba shall provide a next business day response time. Customer shall assure that Toshiba's Servicing Providers have reasonable access to Product. If Product cannot be repaired within two (2) business days, a loaner machine with a model of equal or better features and specifications will be provided.
- To restore malfunctioning equipment to good working order during the Service Hours of 8:00 am to 5:00 pm, Monday through Friday - Holidays Excluded
- To provide toner required for the normal operation of equipment
- To meet reasonable security requirements identified by Customer
- To provide a status upon call completion to the on-site service requestor (End-User or representative of End User) prior to leaving the Customer's site

5.3. Toshiba is not responsible for:

- Adjustments, repairs or replacements made necessary resulting from non-Toshiba Third Parties performing any maintenance, repair or replacement
- Failures or damage resulting from accident, neglect, misuse, failure or inadequacy of electrical power or air conditioning or humidity control, or any causes other than ordinary use of the equipment
- Damage to equipment that is placed in an area that does not conform to manufacturer's electrical and environmental requirements
- Failure due to improper telephone or electrical power Acts of God, lightning or other incidents of excess voltage or power surges
- Repairs necessary when Customer modifies, relocates, damages (including without limitation, unavoidable accidents) abuses or misuses the equipment (including without limitation, the spilling of toner or other substance in the machine) and the breakage of lids, hinges, cassettes, etc.
- Repairs necessary when equipment is altered, tampered, or interconnected with non-compatible Equipment
- Repairs relative to connectivity to the device
- Providing cabling required to connect the printer to the network

- Installing any customer-replaceable consumables including but not limited to paper and toner

5.4. Customer's responsibilities are:

- To provide reasonable access to the equipment
- To provide reasonable notice prior to Toshiba if a service request is cancelled
- To notify Toshiba of any required security requirements as required by Customer
- Support the diagnosis of malfunctioning devices by engaging by phone and/or in person with Toshiba technical support personnel as needed

6. Help Desk

6.1. Help Desk Services are those services required to coordinate and respond to problems and service requests made by Customer in the United States. Toshiba shall be responsible for providing, direct or indirect Help Desk access with begin-to-end logging, tracking, resolution and reporting of service calls.

6.2. Toshiba's will perform the following:

- Toshiba will provide Help Desk support for equipment
- To provide on-line and toll-free dispatch services to Customer
- To provide access to Toshiba's portal for the purpose of placing service calls
- To provide an estimated time of arrival for all service calls

6.3. Customers' Responsibilities are:

- To make all service calls through Toshiba's GSP or toll-free phone number
- To convey the end user name and location
- To convey the model type and serial number
- To convey the nature of the service call whether it is a problem or failure
- To promptly return any calls that Help Desk was unable to reach live

7. Vendor Managed Supplies

7.1. Toshiba responsibilities are to:

- Fulfill all orders for supply replenishment under the Billing Program F.O.B. destination
- Fulfill supply orders within three-days of order
- Provide access to the Toshiba GSP, with a single sign-on, for the purpose of ordering all supplies

7.2. Customer responsibilities consist of:

- Provide secure and environmentally appropriate storage for all supplies
- Customer will order supplies as required through Toshiba's GSP and will instruct Customer employees to order such supplies through Toshiba's GSP
- Installation of toner and other customer installable consumables
- Ensuring that all supplies ordered on behalf of Customer are protected against theft or misuse

8. Parts

Part(s) used in the repair of equipment will be new or refurbished, equivalent or better-than-new in functionality and are not necessarily brand name specific. Replaced parts become the property of Toshiba.

9. Additional Activities

9.1. Toshiba is not obligated, but may at its discretion and Customer's approval perform the following services and charge the Customer a time and material rate of **$150 an hour** for services associated with the following:

- Adjustments, repairs or replacements made necessary resulting from non-Toshiba Third Parties performing any maintenance, repair or replacement;
- Failures or damage resulting from accident, neglect, misuse, failure or inadequacy of electrical power or air conditioning or humidity control, or any causes other than ordinary use of the equipment;
- Damage to equipment that is placed in an area that does not conform to manufacturer's electrical and environmental requirements;

- Failure due to improper telephone or electrical power Acts of God, lightning or other incidents of excess voltage or power surges;
- Repairs necessary when Customer modifies, relocates, damages (including without limitation, unavoidable accidents), abuses or misuses the Equipment (including without limitation, the spilling of toner or other substance in the machine), and the breakage of lids, hinges, cassettes, etc.,
- Repairs necessary when Equipment is altered, tampered, or interconnected with non-compatible Equipment.

9.2. Outside of the Service Hours. After-hour services, weekend and Holidays are considered out-of-scope activities that do not fall within the Service Hours. Toshiba, at its discretion with Customer's consent and direction, may provide the out-of-scope services, provided that proper authorization is received from Customer. These services will be billed separately to Customer and the amounts so billed will be payable to Toshiba according to the then current NASPO ValuePoint Master Agreement pricing.

9.3. Network/Software/Other/Supply Replacement. Requests for the following types of services are out-of-scope and may be performed at Toshiba's discretion with Customer's consent, direction and proper authorization. In the event Toshiba is willing to perform the tasks, Customer shall be billed in addition to time spent and distance traveled fees for: (a) Driver support for single or individual user software applications (Toshiba will provide installation support for two workstations upon new equipment delivery), (b) Service requested to replace consumable items such as but not limited to printer supplies (paper, ink cartridges and toner), power strips, and batteries.

10. Asset Management.

Within ninety (90) calendar days following the Effective Date, Toshiba shall develop and thereafter maintain a comprehensive inventory of all Equipment that is discovered through Toshiba's electronic discovery tool: (a) equipment and network connections and infrastructure used by Toshiba to provide the services; (b) equipment, software and network connections and infrastructure used by Customer in connection with the Services. Toshiba shall provide an electronic copy of such inventory to Customer upon request.

ATTACHMENT 11 – TOSHIBA ASSET RELOCATION REQUEST FORM

DATE OF REQUEST:

CUSTOMER INFORMATION

Purchase Order Number (if required)	Date of Installation	Contract Number	Member #

Request for:

Relocation - One (1) free relocation move per asset per year. If move requires trained personnel, move must be supervised. Note for the 2nd move, the installation, de-installation, freight and other additional fees may apply to the total cost of the equipment move. Dealer will provide a quote to member and will bill direct at the agreed upon rate.

Return of Leased Asset (no cost)

Please allow 15-30 days for return processing

BILL TO INFORMATION

Customer Name		
Street		
City	State	Zip Code
Contact Name	Contact Title	
Telephone Number	Fax Number	

CURRENT EQUIPMENT LOCATION			**NEW EQUIPMENT LOCATION**		
Customer Name	Department	Floor/Room/Suite	Customer Name	Department	Floor/Room/Suite
Street			Street		
City	State	Zip Code	City	State	Zip Code
Contact Name	Contact Title		Contact Name	Contact Title	
Telephone Number	Fax Number		Telephone Number	Fax Number	
Model Number:	Serial Number:		Model Number:	Serial Number:	
Meter Read	Pickup Date:		Meter Read	Delivery Date:	

Name:	Title:	Date:
Signature:		
Special Instructions/Removal Instructions		

Customer must sign this form indicating consent to move or remove equipment. Send this form to Operations via **REQUESTOR AUTHORIZATION**

FAX or EMAIL:

Operations Fax: 800.999.0057
Operations Email: naspo.orders@tabs.toshiba.com

ATTACHMENT 12 – TOSHIBA FLEET MONITORING TOOL SITE SURVEY

The information in this survey allows Toshiba to provide the highest level of quality service. By filling out this survey, you authorize Toshiba FMAudit Support to contact the individuals for implementation and account management purposes.

Part I: Dealer Contact Information

1. Primary Contact Information	
Contact Name:	
Job Title:	
Job Function:	
Tel:	
Email:	

Part II: End-User Organizational Information

1. Company Information	
*Company Name:	**NASPO ValuePoint**
Company Address:	
2. Primary Contact Information	
Contact Name:	
Job Title:	
Job Function:	
Tel:	
Email:	
3. IT Administration	
Same as Primary:	
Contact Name:	
Job Title:	
Job Function:	
Tel:	
Email:	

***Note: Please do not change the Company Name. It must state, "NASPO Valuepoint."**

Part III: Hosting System

a.	What operating system will FMAudit Onsite be run on?	
b.	Is this operating system installed using 32 or 64 bit?	
c.	Does the server/workstation meet the following minimum hardware requirements? • 2.4 GHz processor • 1 GB memory • 1 GB free disk space	
d.	Does the server/workstation meet the following minimum software requirements? • One of the following Microsoft operating systems: I. Windows XP II. Microsoft Windows 2003 III. Microsoft Vista/7/8 • Internet Explorer 7.0 • Windows .NET 2.0 Framework with SP2	

Part IV: Network Infrastructure

a.	Is SNMP traffic (port 161) blocked or restricted on the network?	
b.	What SNMP community name is used for communication with printer related devices? *(i.e. PUBLIC)*	
c.	Are all printers on the WAN accessible from the server/workstation where Onsite will be installed?	

Part V: Proxy / Firewall Restrictions

Answer the following questions if a proxy and/or firewall are present.		
a.	Is there a domain authenticated proxy?	
b.	Is there an IE passport authenticated proxy?	
c.	Will port 80 (HTTP) allow outgoing printer related data to be transferred from the Onsite application back to the Central application located within another facility?	
d.	Will port 443 (SSL / HTTPS) allow license related data to be exchanged between the Onsite application and the FMAudit license server?	
e.	Is there a firewall or router that will block outgoing XML (SOAP) traffic? *(Note: some older Cisco products detect the XML data exchange format as invalid HTTP traffic)*	

Part VI: Network Connected Printer Infrastructure

a.	Approximately how many network connected printers will be monitored?	
b.	Are any printers connected via Jet Direct or compatible devices?	
c.	Is there a workstation firewall installed; if so what product and version? *(i.e. Windows XP sp2 firewall)*	
d.	Is the Windows SNMP Provider service installed?	

Part VII: Items to Prepare

a.	Please attach a list of subnets where printer related products will be discovered. *(i.e. 10.0.1.1-254, 10.0.1-254.1-254)*
b.	Please attach a list of networked printer names that will be monitored. These will be cross referenced with known supported device lists to flag any potential issues. *(i.e. HP LaserJet 2300)*

DocuSign Envelope ID: C764E410-020D-4DE5-99C8-4C5B8EF55B29

ATTACHMENT 13 – TOSHIBA EMETERS ONLINE INFORMATION AND INSTRUCTIONS

Meter reads can be submitted through Toshiba's E-Meters Online (Online Web E-Meter Submission) system using the Internet. Through E-Meter, you can submit your current meter reads for all equipment on a spreadsheet that can be exported on the site and then MASS upload the reads for all devices. Or you can directly enter each meter read per device on the web page.

When are meters due?

The eMeter Online website opens on the 26th of the prior month. Please submit your current meter reads from this date through the 8th of the current month.

If the dates are missed above, you can go to the 'Submitted Meter Read' tab and edit the estimated meter read that processes around the 9th of each month. Meter Reads can be changed from the 9th through the 14th. Billing occurs on the 15th therefore, the website is closed. The site does not open again until the 26th of the month.



To enter a meter read, please follow the steps listed below. **eMeters On line**

Submission Instructions

1. Log onto FYI
2. Go to: Programs and click on Meters Online
3. Search by 'ALL' or Customer Name.
4. Enter the meter read by device.
5. Or export the upload spreadsheet, enter the meter reads, then save the document.
6. The on the website click on the upload spreadsheet, retrieve your data and hit submit. All reads should automatically update. If any fallout, a message will be displayed.



Should you have any questions on submitting your meters on line please either email tabs.fsm@tabs.toshiba.com or call (800) 866-4361, select option 1.

ATTACHMENT 14 – TOSHIBA STATEMENT OF SERVICES

Client	Contractor
<enter Client Principal Contact Name> **Printed Name**	<enter Authorized Contractor name> **Printed Name**
<enter Client Principal Title> **Printed Title**	<enter Authorized Contractor Title > **Printed Title**
Signature (Authorized Client)	**Signature (Authorized Contractor)**
<enter Client SOS Signing Date> **Date**	<enter Authorized Contractor SOS Signing Date> **Date**

This Statement of Services ("SOS") is made by and between Toshiba America Business Solutions, Inc. ("TABS"), including its division Toshiba Business Solutions ("TBS"), with its headquarters located at 25530 Commercentre Drive, Lake Forest, CA 92630 (collectively or individually TABS and TBS shall be referred to as the "Contractor"), and <enter Client Legal Name> located at <enter Client Location> (the "Client").
This SOS describes the project and details the services and deliverables (hereinafter collectively known as "Project Services") associated with the <enter Solution Name> project (the "Project").
Project Services shall be provided pursuant to the "Project Contract" which consists of (i) this SOS together with (ii) the Master Software and Services Agreement ("MSSA") <enter Specific MSSA Name> between Contractor and its Client (the "Services Agreement"). This SOS is subject and subordinate to the MSSA. To the extent the terms and conditions of the Services Agreement and SOS conflict, the SOS shall prevail.

1. Project Contacts

Contractor Office Details	
Contractor Region	
Address Line1	
Address Line 2	
City, State, ZIP City, State. ZIP	
Phone Number	
Fax Number	
Contractor Sales Rep. Name	
Contractor Consultant Name	
Contractor Analyst Name	
Client Number	
Contract Number	

Client Details			
Client Name			
Client Contact Person			
Client Address Line-1			
Client Address Line-2			
City, State, ZIP			
Telephone #:		Ext:	
Fax Number:			
Email Address:			
Client Number:			
Contract Number:			

2. Introduction

Client's acceptance of this SOS shall be authorization for Contractor's performance of the Project Services set forth in this SOS. Contractor reserves the right to utilize subContractors and sub-subContractors (collectively known as "Sub-Contractors") in performance of the Project Services. Contractor represents that all its Sub-Contractors (i) will be competent to perform the Project Services; (ii) will exercise commercially reasonable standards in performing these Project Services; and (iii) will comply with all terms and conditions applicable to Contractor in the performance of the Project Services.

The purposes of the SOS are to (i) specify the work to be completed by the Contractor during phases of the Project; (ii) detail the obligations of the Contractor and the Client; and (iii) set forth the Project schedule and fees.

Contractor has prepared this SOS to detail the scope of Project Services and costs for the Project Services. The costs stated were derived by drawing from Contractor's experience with similar engagements and using preliminary information received from Client.

3. Project Objective

Based on the agreed upon business requirements, Contractor will provide design, implementation, training, and support services to the following locations:

<enter "SaaS" if Cloud Hosted or enter the Client's physical Address Location for On-Premises hosted solutions>

4. SOS Addendums

The SOS Addenda are supplementary documents that detail the specific deliverables and responsibilities by party. The relevant addendum is predicated upon whether your solution is a cloud solution, non-cloud solution, or mix of both. The SOS Addenda describe the Project Deliverables, Client and Contractor Responsibilities, Professional Services and Licensing Fees, Project Plan, Support Escalation Process, Pricing Schedule, Business Requirements, Functional Design, Change Order Authorization, and Solution Delivery and Acceptance.

A checkmark incorporates the referenced document into this agreement.

☐ Statement of Services - Addendum A (Cloud Solution).

☐ Statement of Services - Addendum B (On-Premises Solution).

☐ Statement of Services - Addendum C (Hybrid Solution).

Project Deliverable(s)

Based on the agreed upon business requirements, Contractor will provide the following:

- Statement of Service (SOS).
- Master Software and Services Agreement (MSSA).
- Professional Services as defined in the SOS.
- Software documentation is provided with the Contractor provided Software.
- User and Administration manual.
- User Acceptance Testing Recommendations.

NOTE: For the on-premises components of the deployed solution, it is the responsibility of the Client to meet

the minimum installation pre-requisites provided to them prior to the installation of the software.

5. Services

Contractor will provide the following services:

- Consult with Client personnel to implement the solution.
- Inform the Client IT personnel on the features of the solution.
- Deployment, configuration, and integration of solution.
- Training:
  - Administrative training.
  - End user to use the solution.

Provide Details of the Services being rendered for the specific solution implemented. Remove these highlighted notes prior to submission of this SOS to Client.

<Replace this line with details of the services being provided for this solution>

6. Project Milestones

Notes: The milestones table below is intended as a sample. Update as needed. Remove the highlighted notes prior to submission of this SOS to Client.

Milestone Description	Milestone Date
<enter Solution Name>	
1. Initiating and Planning complete	Mutually established between Client and Contractor
2. Executing complete	Mutually established between Client and Contractor
3. Monitoring and Controlling complete	Mutually established between Client and Contractor
4. Solution Delivery and Acceptance complete	Mutually established between Client and Contractor
5. Project Complete	Mutually established between Client and Contractor

7. Completion Criteria

When the services detailed in this SOS have been completed and demonstrated, the project will be considered complete, and Contractor will request Client signoff of the Solutions Delivery and Acceptance document referenced in this SOS within 15 days of Project Plan completion.

8. Change Management

This SOS is intended to provide, as much as possible, a clear understanding of the responsibilities of the parties concerning these Project Services. Changes to the scope, assumptions, personnel, environment, dependencies, timeline, Software or Deliverables post execution of this SOS will be communicated in writing and agreed to by both Contractor and Client via Contractor's Project Management personnel. A Change Order Authorization ("COA") form will be added to this agreement to amend and set forth the effective date, purpose, description, and price, if applicable.

The work required to address these changes will be scoped and presented to Client as a COA with any

additional time, materials, or cost. The following list provides a detailed process to follow if changes to the scope of this SOS are required.

- A COA will be the vehicle for communicating change and will be prepared by the Contractor lead Solutions Analyst assigned to this project. The COA must describe the change, the reason for the change, and the effect the change will have on the project.
- Both Client and Contractor will review the proposed change and approve. The review will determine the effect the COA will have on price, schedule, and other terms and conditions of this SOS.
- Both parties must sign a written COA to authorize the implementation of any changes.

9. Support

Contractor will provide implementation support for this project through to its completion. This includes but is not limited to ensuring installed applications are performing to manufacturer's specifications.

Upon completion of the project, and provided client is up to date with their maintenance and support payments, Client will have access to a Contractor support engineer for technical issues. Support will continue to be available throughout the term of the contract and upon renewal of the contract.

10. SOS – Assumptions

The following are the general assumptions on which this SOS and Professional Services Fee are based. If any of these assumptions either change or are incorrect a COA may be required, which may result in additional Professional Services fees.

- Building environmental conditions that are within equipment specifications for airflow, temperature, humidity, and electrical quality.

Project work will be performed during normal business hours Monday through Friday 8 a.m. to 5 p.m. local time, excluding holidays. Client will provide unimpeded access to equipment and facilities. If access delays occur, work performed outside of normal business hours may incur an overtime premium.

- Contractor:
  - Is not responsible for any conflicts with existing hardware or software that is no longer supported by the manufacturer.
  - Is only responsible for integration tasks outlined in this proposed SOS.
  - At Contractor's discretion project work may be provided remotely in whole, or in part.
- All systems will be installed in US English (other localized language configurations can be provided at an incremental cost).

DocuSign Envelope ID: C764E410-020D-4DE5-99C8-4C5B8EF55B29

Exhibit A: Referenced Documents Table

A checkmark incorporates the document into this agreement.

Applicable	Document Title	Document Description
☐	**Project Plan**	Project Plan describes the execution, management, and control of the project
☐	**Pricing Schedule**	Provides pricing and line-item details as necessary.
☐	**Solutions Delivery and Acceptance**	Acknowledgement form: client acknowledges and confirms that the deliverable, milestone and/or project referenced has been completed, and all testing and acceptance criteria have been satisfied.
☐	**Change Order Authorization**	Document to be executed when the original project scope has changed post SOS authorization by client.
☐	**Support Escalation Process**	Describes steady state user-support escalation process.
☐	**Business Requirements Document**	The BRD outlines the details for a project including the documentation of Client needs and expectations. The BRD is intended to highlight the project Scope, Requirements, Assumptions, Constraints, and Risks.
☐	**Functional Design Document**	The FDD provides an overview of the business issue to be addressed, a mock-up of the User Interface (UI) design, and a plain English synopsis of the logic anticipated. This document provides the Client with the opportunity to approve the high-level design before the effort is made to develop a detailed or technical design.

ATTACHMENT 15 – TOSHIBA SAAS STATEMENT OF SERVICES

This addendum is hereby incorporated by reference as Addendum A to the Statement Of Service (“SOS”) by and between Toshiba America Business Solutions, Inc. (“Contractor”) and (“Client”).

Associated Project SOS Name: <Enter Associated Proejct SOS Name Here>
Associated Project MSSA Name: <Enter Associated Proejct MSSA Name Here>

Client Responsibilities

The following activities are the responsibility of Client.
The “Client Responsibilities – Details” is the Solution specific activities that are defined as the responsibility of Client. If any of these responsibilities either change or are incorrect a (COA) Change Order Authorization may be required, which may result in additional Professional Services fees.

- Ensure that all applications and data are successfully backed up prior to Contractor beginning project services detailed in the SOS.
- Provide technical and application support for configuration and testing of Client specific information. Contractor does not warrant Client applications.
- Provide systems personnel for the project familiar with all aspects of Client’s enterprise configuration – security, remote access, domain structure, WAN/LAN connectivity, applications used for this project – to work in conjunction with the Contractor team on this implementation. Additionally, a desktop technician may be required to perform Client -side duties.
- Make available all the appropriate resources, systems, network access, reports and any/all other data elements required for Contractor to complete the deliverables and other research necessary to complete this project as contained herein.
- Provide a dedicated project manager or coordinator to provide management, reporting, day to day project tracking, move/add/change requirements, and cross-coordination of requirements.
- Network connectivity between all solution components.
- Deploy Solution to Client end-user desktops (if required).
- Identify a Project Sponsor with sign-off authority and ability to facilitate Client stakeholder participation.
- Report on any Client technical or resource issues that would delay, hinder, or adversely affect the deployment of the solution or its performance in the Client environment.
- Allow for the distribution of Solution upgrades to Client PC's as needed.
- Accept title and/or license upon delivery/installation for product and/or Solution purchased if applicable.
- Sign appropriate Contractor finance document for leased or financed transactions.

Contractor Responsibilities

The following activities are the responsibility of Contractor.
The “Contractor Responsibilities – Details” is the Solution specific activities that are defined as the responsibility of Client. If any of these responsibilities either change or are incorrect a COA may be required, which may result in additional Professional Services fees.

- Solution license key.
- Technical specifications for implementation.
- Email and phone support for the duration of the contract.
- Technical Services included in the scope herein.
- Configuration of the Solution components.
- Solution training.
- Solution revisions, updates, and patches during the term of the agreement.
- Support for the Solution updates for any of the on-premises components of the solutions defined in this SOS is included in this Agreement.

Support

Contractor will provide implementation support for this project through to its completion. This includes but is not limited to ensuring installed applications are performing to manufacturer's specifications.

Upon completion of the project, Client will have access to a Contractor support Engineer for technical issues. Support will continue to be available throughout the term of the contract and upon renewal of the contract.

Professional Services and License Fees

A checkmark incorporates the referenced table into this agreement.

☐ **TABLE 1: SaaS FEES:**

This is a fixed fee engagement. If applicable the Professional Services fees for this project are included in the terms of the lease agreement signed by Client. Any changes to this SOS will require a Change Order executed and agreed upon by both parties. Contractor cannot perform work outside of the scope of this SOS without an authorized Change Order signed by Client.

Services Fees	
Initial Investment	**$<Enter Initial Client's Payment Here>**
License Fees	**$<Enter Licensing Fee Here> (renewable annually)**
(includes M&S)	

Taxes, if applicable, are not included and will be invoiced separately.

This document is valid for a period of 30 days from the cover date; after this date it may be revised upon consent by Contractor.

Expenses associated with travel, overnight stays, etc., for the hours estimated in this SOS are included in the estimate of this project.

ATTACHMENT 16 – TOSHIBA ON-PREMISES STATEMENT OF SERVICES

This addendum is hereby incorporated by reference as Addendum B to the Statement Of Service ("SOS") by and between Toshiba America Business Solutions, Inc. ("Contractor") and ("Client").

Associated Project SOS Name: <Enter Associated Proejct SOS Name Here>
Associated Project MSSA Name: <Enter Associated Proejct MSSA Name Here>

Client Responsibilities

The following activities are the responsibility of Client.
The "Client Responsibilities – Details" is the Solution specific activities that are defined as the responsibility of Client. If any of these responsibilities either change or are incorrect a COA may be required, which may result in additional Professional Services fees. Please review this section to make sure these responsibilities are correct.

- Ensure that all applications and data are successfully backed up prior to Contractor beginning work. Contractor is not responsible for any lost information.
- Provide original manufacturer documentation for all existing hardware and Solution.
- Provide Backup equipment and media.
- Provide UPS equipment and media.
- Provide technical and application support for configuration and testing of Client specific information. Contractor does not warrant Client applications.
- Provide systems personnel for the project familiar with all aspects of Client's enterprise configuration – security, remote access, domain structure, WAN/LAN connectivity, applications used for this project – to work in conjunction with the Contractor team on this implementation. Additionally, a desktop technician may be required to perform Client - side duties.
- Make available all the appropriate resources, systems, network access, reports and any/all other data elements required for Contractor to complete the deliverables and other research necessary to complete this project as contained herein.
- Provide a dedicated project manager or coordinator to provide management, reporting, day to day project tracking, move/add/change requirements, and cross-coordination of requirements.
- Network configuration information to assist in solution design.
- Deploy Solution to Client end-user desktops (if required).
- Suitable hardware to host the Solution application components.
- Suitable Operating Systems Solution and licenses for the above.
- Identify a Project Sponsor with sign-off authority and ability to facilitate Client stakeholder participation.
- Report on any Client technical or resource issues that would delay, hinder or adversely affect the deployment of the solution or its performance in the Client environment.
- Provide the appropriate physical and network access to onsite resources, including IT area and all necessary fees, licenses, and release forms, related to photos, logos, and imagery that are to be provided to Contractor.
- Provide a workspace for Contractor staff to use if on-site work is required.
- Allow for the distribution of Solution upgrades to Client PCs as needed.
- Hardware and Solution maintenance for all servers.
- System Maintenance Tasks:
    - Resolution of Solution system alerts as listed in the solution application.
    - Daily monitoring of Server Health.
    - Backup of all Solution data and system settings.
    - Distribution of Solution upgrades to Client PCs as needed.
    - Installation and deployment of Solution updates.
    - Inclusion of Solution servers in routine maintenance activities (anti-virus, backup, etc.).
- Accept title and/or license upon delivery/installation for product and/or Solution purchased if applicable.

- Sign appropriate Contractor finance document for leased or financed transactions.

Contractor Responsibilities

The following activities are the responsibility of Contractor.
The "Contractor Responsibilities – Details" is the Solution specific activities that are defined as the responsibility of Contractor. If any of these responsibilities either change or are incorrect a COA may be required, which may result in additional Professional Services fees.

- Solution License Key.
- Technical specification for implementation.
- Installation of the Solution components.
- Email and phone support for the duration of the contract.
- Technical Services included in the scope herein.
- Configuration of the Solution components.
- Solution training.
- Solution revisions, updates, and patches during the term of the agreement.
- Support for the download of Solution updates for the solutions defined in this SOS is included in this Agreement.
- Services associated with this installation and deployment of updates, patches, bug fixes and updates for the components of the solutions defined in this SOS are outside of this agreement and will require a separate project plan and SOS.

Support

Contractor will provide implementation support for this project through to its completion. This includes but is not limited to ensuring installed applications are performing to manufacturer's specifications.

Upon completion of the project, Client will have access to a Contractor support Engineer for technical issues. Support will continue to be available throughout the term of the contract and upon renewal of the contract.

Note: *If applicable, refer to the* ***Statement of Services Support Escalation Process - Addendum E*** *document referenced in this SOS for support details.*

Professional Services and License Fees

A checkmark incorporates the referenced document into this agreement.

TABLE 1: FIXED FEE ENGAGEMENT:

This is a fixed fee engagement. If applicable the Professional Services fees for this project are included in the terms of the lease agreement signed by Client. Any changes to this SOS will require a Change Order executed and agreed upon by both parties. Contractor cannot perform work outside of the scope of this SOS without an authorized Change Order signed by Client.

Professional Service Fees $XXXXXX.XX

Taxes, if applicable, are not included and will be invoiced separately.

This document is valid for a period of 30 days from the cover date; after this date it may be revised upon consent by Contractor.

Expenses associated with travel, overnight stays, etc., for the hours estimated in this SOS are included in the estimate of this project.

☐ **TABLE 2: TIME AND MATERIALS ENGAGEMENT:**

This is a time and materials engagement. The Professional Services fees for this project are inclusive for up to XX hours. The hours are an estimate based upon our current understanding of the project. Any changes to this Statement of Service will require a Change Order executed and agreed upon by both parties. Contractor cannot perform work outside of the scope of this SOS without an authorized Change Order signed by Client.

Professional Service Fees $XXXXXX.XX

Taxes, if applicable, are not included and will be invoiced separately.

This document is valid for a period of 30 days from the cover date; after this date it may be revised.

Expenses associated with travel, overnight stays, etc., for the hours estimated in this SOS are included in the estimate of this project.

☐ **TABLE 3: BLOCK OF HOURS ENGAGEMENT:**

This is a Block of Hours engagement. The Professional Services fees for this project are limited to XX hours. If additional hours are required, additional Block of Hours must be purchased using a Change Order executed and agreed upon by both parties. Contractor cannot perform work outside of the scope of this SOS without an authorized Change Order signed by Client.

Professional Service Fees $XXXXXX.XX

Taxes, if applicable, are not included and will be invoiced separately.

This document is valid for a period of 30 days from the cover date; after this date it may be revised.
Expenses associated with travel, overnight stays, etc., for the hours estimated in this SOS are included in the estimate of this project.

ATTACHMENT 17 – TOSHIBA HYBRID STATEMENT OF SERVICES

This addendum is hereby incorporated by reference as Addendum C to the Statement Of Service ("SOS") by and between Toshiba America Business Solutions, Inc. ("Contractor") and ("Client").

Associated Project SOS Name: <Enter Associated Proejct SOS Name Here>
Associated Project MSSA Name: <Enter Associated Proejct MSSA Name Here>

Client Responsibilities

The following activities are the responsibility of Client.
The "Client Responsibilities – Details" is the Solution specific activities that are defined as the responsibility of Client. If any of these responsibilities either change or are incorrect a (COA) Change Order Authorization may be required, which may result in additional Professional Services fees.

- Ensure that all applications and data are successfully backed up prior to Contractor beginning project services detailed in the SOS.
- Provide technical and application support for configuration and testing of Client specific information. Contractor does not warrant Client applications.
- Provide systems personnel for the project familiar with all aspects of Client's enterprise configuration – security, remote access, domain structure, WAN/LAN connectivity, applications used for this project – to work in conjunction with the Contractor team on this implementation. Additionally, a desktop technician may be required to perform Client -side duties.
- Make available all the appropriate resources, systems, network access, reports and any/all other data elements required for Contractor to complete the deliverables and other research necessary to complete this project as contained herein.
- Provide a dedicated project manager or coordinator to provide management, reporting, day to day project tracking, move/add/change requirements, and cross-coordination of requirements.
- Network connectivity between all solution components.
- Deploy Solution to Client end-user desktops (if required).
- Identify a Project Sponsor with sign-off authority and ability to facilitate Client stakeholder participation.
- Report on any Client technical or resource issues that would delay, hinder, or adversely affect the deployment of the solution or its performance in the Client environment.
- Allow for the distribution of Solution upgrades to Client PC's as needed.
- Accept title and/or license upon delivery/installation for product and/or Solution purchased if applicable.
- Sign appropriate Contractor finance document for leased or financed transactions.

Specific to on-premises components - Client responsibilities:

- Suitable hardware to host the Solution application components.
- Suitable Operating System Solution and licenses for the hardware provided.
- Network configuration information to assist in solution design.
- Deploy Solution with the assistance of Client IT Personnel to Client desktops (if required).
- Provide a workspace for Contractor staff to use if on-site work is required.
- Provide Backup equipment and media**.**
- Provide UPS equipment and media.
- Hardware and Solution maintenance for all servers.
- System Maintenance Tasks:
    - Resolution of Solution system alerts as listed in the solution application.
    - Daily monitoring of Server Health.
    - Backup of all Solution data and system settings.
    - Distribution of Solution upgrades to Client PC's as needed.

- Installation and deployment of Solution updates.
- Inclusion of Solution servers in routine maintenance activities (anti-virus, backup, etc.).

Contractor Responsibilities

The following activities are the responsibility of Contractor.
The "Contractor Responsibilities – Details" is the Solution specific activities that are defined as the responsibility of Contractor. If any of these responsibilities either change or are incorrect a COA may be required, which may result in additional Professional Services fees.

- Solution license key.
- Technical specifications for implementation.
- Email and phone support for the duration of the contract.
- Technical Services included in the scope herein.
- Configuration of the Solution components.
- Solution training.
- Solution revisions, updates, and patches during the term of the agreement.
- Support for the Solution updates for any of the on-premises components of the solutions defined in this SOS is included in this Agreement.

Support

Contractor will provide implementation support for this project through to its completion. This includes but is not limited to ensuring installed applications are performing to manufacturer's specifications.

Upon completion of the project, Client will have access to a Contractor support Engineer for technical issues. Support will continue to be available throughout the term of the contract and upon renewal of the contract.

Professional Services and License Fees

A checkmark incorporates the referenced table into this agreement.

☐ **TABLE 1: SaaS FEES:**

This is a fixed fee engagement. If applicable the Professional Services fees for this project are included in the terms of the lease agreement signed by Client. Any changes to this SOS will require a Change Order executed and agreed upon by both parties. Contractor cannot perform work outside of the scope of this SOS without an authorized Change Order signed by Client.

Services Fees

Initial Investment **$<Enter Initial Client's Payment Here>**

License Fees **$<Enter Licensing Fee Here> (renewable annually)**

(includes M&S)

Taxes, if applicable, are not included and will be invoiced separately.

This document is valid for a period of 30 days from the cover date; after this date it may be revised upon consent by Contractor.

Expenses associated with travel, overnight stays, etc., for the hours estimated in this SOS are included in the estimate of this project.

DocuSign Envelope ID: C764E410-020D-4DE5-99C8-4C5B8EF55B29

TOSHIBA

Master Software and Services Agreement

This MASTER SOFTWARE AND SERVICES AGREEMENT ("Agreement") is entered into as of the Effective Date by and between Toshiba America Business Solutions, Inc. a California corporation with an address of 25530 Commercentre Drive, Lake Forest, CA 92630 ("TABS") including its division Toshiba Business Solutions ("TBS"), (collectively or individually TABS and TBS shall be referred to as the "Contractor") and the Client specified below ("Client"). For on-premises based software solutions only, the following clauses are not applicable to this Agreement and hereby stricken 1.2, 1.8, 4, 6, and 8. For cloud-based or hybrid solutions (whereby both an on-premises solution(s) and cloud-based solution(s) will be implemented), all terms apply.

1. **Definitions**.

1.1 "Confidential Information" means, with respect to a party hereto, all information or material which (i) the party identifies in writing as confidential; and (ii) which from all the relevant circumstances should reasonably be assumed to be confidential and proprietary, whether or not marked, designated, or otherwise identified as "confidential" or "proprietary." Neither party shall have any obligation with respect to information which: (i) is or becomes generally known to the public by any means other than a breach of the obligations of a receiving party; (ii) was previously received by the receiving party without restriction or received by the receiving party from a third party who had a lawful right without restriction to disclose such information; or (iii) is independently developed by the receiving party without reference to Confidential Information.

1.2 "Data Management Services" or "DMS" means the Internet-based transactional application and database services provided by Contractor that are accessible to Client through the Internet for managing business processes and information.

1.3 "Documentation" means the documentation, including any Third Party Materials provided by or on behalf of Contractor with the Product at the time of delivery and any updates that Contractor may, in its discretion, provide from time-to-time. The Documentation will be included in the definition of "Product" under this Agreement and subject to all restrictions and limitations relating to the Product.

1.4 "Licensed Entities" means those Client entities specifically identified in a SOS as licensed to use a Product.

1.5 "SOS," or "Statement of Services," "Statement of Work," of "Statement of Support" as applicable, is defined in Section 2.

1.6 "Product" refers to such Software, Third Party Materials, Subscription Services, and professional Services, including implementation services, consulting and software integration services, outsourced business processing services, and other DMS projects, as each may be licensed by Client under a SOS from time-to-time, including any Documentation.

1.7 "Software" means the object code version of any software that may be licensed by Contractor to Client under a SOS for installation on Client's systems. To the extent any updates or enhancements are delivered to Client as part of Support, such updates and enhancements will be deemed included in the definition of "Software."

1.8 "Subscription Service" means an application or database product hosted by Contractor or its agents, including the DMS, and made available for remote access and use by Client and its Licensed Entities under a SOS.

1.9 "Support" means Contractor's then current support and maintenance program for the relevant Product, as more fully described in the relevant SOS.

1.10 "Third Party Materials" means software and data licensed or provided by third parties. Applicable third-party license agreements and disclaimers, if any, will be provided with the relevant Products.

2. **SOS**. This is a master software and services agreement under which Client may place an order for one or more Products under a Statement of Services or Statement of Work, as applicable. Each order will be set forth in a written SOS or other form provided by Contractor, which is only effective when signed by both parties. The SOS will (i) specifically reference and is governed by this Agreement and (ii) identify the relevant Product being licensed, the term of license or subscription, and any other relevant terms not otherwise set forth in this Agreement. The form of SOS is attached to and made a part of this Agreement as Schedule A-1 (Statement of Services), Schedule A-2 (Statement of Work), and Schedule A-3 (Statement of Support).

3. **Software License**. This Section applies only in the event Client licenses Software from Contractor pursuant to a SOS. Subject to the terms and conditions of this Agreement and Client's payment of all relevant fees, Contractor hereby grants to Client a non-exclusive, perpetual, non-transferable (except pursuant to Section 22.1), limited license to use for its internal business purposes the Software at the Licensed Entities. Client may make one copy of the Software for backup and archival purposes.

4. **Subscription Services License**. This Section applies only in the event Client licenses Subscription Services as a Software as a Service ("Subscription Services") from Contractor pursuant to a SOS. Subject to the terms and conditions of this Agreement and Client's payment of all relevant fees, Contractor hereby grants to Client a non-exclusive, non-transferable (except as otherwise set forth herein), limited license to access and use for its internal business purposes the Subscription Services in connection with the Licensed Entities. The initial term of the foregoing license will be as set forth in the applicable SOS. Client shall be solely responsible for connection of Client's systems to a telecommunications service that provides Internet access for purposes of Client's access and use of the Subscription Services.

5. **Restrictions**. Client may only use the Products as described in the applicable Documentation, including operation of Software only on the hardware and software configurations specified in the

DocuSign Envelope ID: C764E410-020D-4DE5-99C8-4C5B8EF55B29

SOS or associated Documentation. Client shall ensure the Licensed Entities comply with all applicable terms of this Agreement. Any breach of this Agreement by any employee or agent of Client shall constitute a breach by Client. Except as expressly authorized by this Agreement, Client will not (and will not allow any third party to): (i) permit any unauthorized user or any third party to access and use the Products; (ii) decompile, disassemble, or reverse engineer the Products,; (iii) use the Products or any Contractor Confidential Information to develop a competing product or service; (iv) use or allow others to use any Product for the benefit of any third party; (v) use any Product, or allow the transfer, transmission, export, or re-export of any Product or portion thereof, in violation of any export control laws or regulations administered by the U.S. Commerce Department or any other government agency; or (vi) remove any copyright, trademark, proprietary rights, disclaimer or warning notice included on or embedded in any part of a Product (including any screen displays, etc.) or any other products or materials provided by Contractor hereunder. Under no circumstances, shall Contractor be liable or responsible for any use, or any results obtained by the use, of the Products in conjunction with any other software or third-party products. All such use shall be at Client's sole risk.

6. **Availability of Subscription Services**. The provisions of this Section apply only to Subscription Services. The Subscription Services will be available for access and use by Client in accordance with the terms set forth in the applicable SOS or Third-Party Materials. The Subscription Services will be available for access and use by Client an average of at least ninety-five percent (95%) of the time ("Availability Requirement"), excluding any period of Permitted Unavailability (as defined below). Client shall provide notice to Contractor of any unavailability for access or use and document such disruption for review by Contractor. "Permitted Unavailability" includes Planned Outages (as defined below) and any unavailability due to causes beyond the reasonable control of Contractor, including, without limitation: any software, hardware, or telecommunication failures; interruption or failure of telecommunication or digital transmission links; Internet slow-downs or failures; failures or default of third party software, vendors, or products; and unavailability resulting from the actions or inactions of Client or a failure of Client's communications link or systems. "Planned Outages" means the period during which Contractor conducts standard systems maintenance. Contractor shall use reasonable efforts to schedule Planned Outages during non-peak hours. In the event Contractor fails to achieve the Availability Requirement, Contractor shall use commercially reasonable efforts to correct the interruption as promptly as practicable. In the event Contractor fails to achieve the Availability Requirement in three consecutive months during the term of this Agreement, Client may terminate this Agreement without further obligation and receive a prorated refund of any pre-paid, unused recurring fees. Such refund shall constitute Client's sole and exclusive remedy and Contractor's sole and exclusive liability for failure to achieve the Availability Requirement.

7. **Information Security for Subscription Services**. Contractor has developed, implemented, and will maintain effective information security policies and procedures that include administrative, technical and physical safeguards designed to (i) ensure the security and confidentiality of confidential information provided to it, (ii) protect against anticipated threats or hazards to the security or integrity of such confidential information, (iii) protect against unauthorized access or use of such confidential information, (iv) minimize accidental or unlawful destruction, loss, alteration or unauthorized disclosure or access of Client Data (as such term is defined in Section 8), and (v) ensure the proper disposal of confidential information. All personnel handling such confidential information have been appropriately trained in the implementation of its information security policies and procedures. Contractor regularly audits and reviews its information security policies and procedures to ensure their continued effectiveness and determine whether adjustments are necessary considering then-current circumstances including, without limitation, changes in technology, its or its vendors', contactors', and licensor's information systems or threats or hazards to confidential information. In the event of unauthorized access to confidential information or non-public personal information, each party shall cooperate with the other party, provide any notices and information regarding such unauthorized access to appropriate law enforcement agencies and government regulatory authorities, and affected individuals which are deemed necessary. Contractor shall promptly report to Client any compromise of security that it becomes aware of regarding Client Data and reasonably cooperate with Client in investigating the compromise. CLIENT ACKNOWLEDGES THAT SECURITY SAFEGUARDS, BY THEIR NATURE, ARE CAPABLE OF CIRCUMVENTION AND THAT CONTRACTOR DOES NOT AND CANNOT GUARANTEE THAT THE SUBSCRIPTION SERVICES, CONTRACTOR'S SYSTEMS, AND THE INFORMATION CONTAINED THEREIN (INCLUDING CONFIDENTIAL INFORMATION) CANNOT BE ACCESSED BY UNAUTHORIZED PERSONS CAPABLE OF OVERCOMING SUCH SAFEGUARDS. CONTRACTOR SHALL NOT BE RESPONSIBLE OR LIABLE FOR ANY SUCH UNAUTHORIZED ACCESS NOR SHALL ANY SUCH UNAUTHORIZED ACCESS CONSTITUTE A BREACH BY CONTRACTOR OF ITS CONFIDENTIALITY OBLIGATIONS HEREUNDER.

8. **Ownership; Client Data**.

8.1 Ownership. The Products are licensed, not sold. Except for the limited licenses granted in Sections 3 and 4, Contractor and its licensors reserve all right, title, and interest, express or implied, in and to the Products. Client acknowledges and agrees it shall not use any Confidential Information disclosed by Contractor to Client in connection with this Agreement to contest the validity of any

DocuSign Envelope ID: C764E410-020D-4DE5-99C8-4C5B8EF55B29

SOS or associated Documentation. Client shall ensure the Licensed Entities comply with all applicable terms of this Agreement. Any breach of this Agreement by any employee or agent of Client shall constitute a breach by Client. Except as expressly authorized by this Agreement, Client will not (and will not allow any third party to): (i) permit any unauthorized user or any third party to access and use the Products; (ii) decompile, disassemble, or reverse engineer the Products,; (iii) use the Products or any Contractor Confidential Information to develop a competing product or service; (iv) use or allow others to use any Product for the benefit of any third party; (v) use any Product, or allow the transfer, transmission, export, or re-export of any Product or portion thereof, in violation of any export control laws or regulations administered by the U.S. Commerce Department or any other government agency; or (vi) remove any copyright, trademark, proprietary rights, disclaimer or warning notice included on or embedded in any part of a Product (including any screen displays, etc.) or any other products or materials provided by Contractor hereunder. Under no circumstances, shall Contractor be liable or responsible for any use, or any results obtained by the use, of the Products in conjunction with any other software or third-party products. All such use shall be at Client's sole risk.

6. **Availability of Subscription Services**. The provisions of this Section apply only to Subscription Services. The Subscription Services will be available for access and use by Client in accordance with the terms set forth in the applicable SOS or Third-Party Materials. The Subscription Services will be available for access and use by Client an average of at least ninety-five percent (95%) of the time ("Availability Requirement"), excluding any period of Permitted Unavailability (as defined below). Client shall provide notice to Contractor of any unavailability for access or use and document such disruption for review by Contractor. "Permitted Unavailability" includes Planned Outages (as defined below) and any unavailability due to causes beyond the reasonable control of Contractor, including, without limitation: any software, hardware, or telecommunication failures; interruption or failure of telecommunication or digital transmission links; Internet slow-downs or failures; failures or default of third party software, vendors, or products; and unavailability resulting from the actions or inactions of Client or a failure of Client's communications link or systems. "Planned Outages" means the period during which Contractor conducts standard systems maintenance. Contractor shall use reasonable efforts to schedule Planned Outages during non-peak hours. In the event Contractor fails to achieve the Availability Requirement, Contractor shall use commercially reasonable efforts to correct the interruption as promptly as practicable. In the event Contractor fails to achieve the Availability Requirement in three consecutive months during the term of this Agreement, Client may terminate this Agreement without further obligation and receive a prorated refund of any pre-paid, unused recurring fees. Such refund shall constitute Client's sole and exclusive remedy and Contractor's sole and exclusive liability for failure to achieve the Availability Requirement.

7. **Information Security for Subscription Services**. Contractor has developed, implemented, and will maintain effective information security policies and procedures that include administrative, technical and physical safeguards designed to (i) ensure the security and confidentiality of confidential information provided to it, (ii) protect against anticipated threats or hazards to the security or integrity of such confidential information, (iii) protect against unauthorized access or use of such confidential information, (iv) minimize accidental or unlawful destruction, loss, alteration or unauthorized disclosure or access of Client Data (as such term is defined in Section 8), and (v) ensure the proper disposal of confidential information. All personnel handling such confidential information have been appropriately trained in the implementation of its information security policies and procedures. Contractor regularly audits and reviews its information security policies and procedures to ensure their continued effectiveness and determine whether adjustments are necessary considering then-current circumstances including, without limitation, changes in technology, its or its vendors', contactors', and licensor's information systems or threats or hazards to confidential information. In the event of unauthorized access to confidential information or non-public personal information, each party shall cooperate with the other party, provide any notices and information regarding such unauthorized access to appropriate law enforcement agencies and government regulatory authorities, and affected individuals which are deemed necessary. Contractor shall promptly report to Client any compromise of security that it becomes aware of regarding Client Data and reasonably cooperate with Client in investigating the compromise. CLIENT ACKNOWLEDGES THAT SECURITY SAFEGUARDS, BY THEIR NATURE, ARE CAPABLE OF CIRCUMVENTION AND THAT CONTRACTOR DOES NOT AND CANNOT GUARANTEE THAT THE SUBSCRIPTION SERVICES, CONTRACTOR'S SYSTEMS, AND THE INFORMATION CONTAINED THEREIN (INCLUDING CONFIDENTIAL INFORMATION) CANNOT BE ACCESSED BY UNAUTHORIZED PERSONS CAPABLE OF OVERCOMING SUCH SAFEGUARDS. CONTRACTOR SHALL NOT BE RESPONSIBLE OR LIABLE FOR ANY SUCH UNAUTHORIZED ACCESS NOR SHALL ANY SUCH UNAUTHORIZED ACCESS CONSTITUTE A BREACH BY CONTRACTOR OF ITS CONFIDENTIALITY OBLIGATIONS HEREUNDER.

8. **Ownership; Client Data**.

8.1 Ownership. The Products are licensed, not sold. Except for the limited licenses granted in Sections 3 and 4, Contractor and its licensors reserve all right, title, and interest, express or implied, in and to the Products. Client acknowledges and agrees it shall not use any Confidential Information disclosed by Contractor to Client in connection with this Agreement to contest the validity of any

DocuSign Envelope ID: C764E410-020D-4DE5-99C8-4C5B8EF55B29

Contractor intellectual property. Any such use of Contractor's information and data shall constitute a material, non-curable breach of this Agreement.

8.2 Client Data. Except for the limited license below, nothing contained in this Agreement shall be construed as granting Contractor any right, title, or interest in or to any Client provided data or other content input into the Products, including Personal Data (as defined in Section 8.3) (the "Client Data"). Client grants Contractor the perpetual, non-exclusive, irrevocable, royalty-free, worldwide, sublicensable right and license to collect, store, use, compile, modify, translate and disclose such Client Data: (i) as stated in Contractor's Privacy Policy; (ii) as required by law; (iii) in the improvement or other development of Contractor's product and services, including the Products; (iv) in aggregated form that does not identify Client; and (v) in connection with performing its obligations under this Agreement .

8.3 Personal Data. If Client or it's users or any third parties acting on Client's behalf, access or use a Product to collect, store, process, transmit, by any means any information from which a person (a data subject) can be reasonably identified ("Personal Data"), Client shall ensure that all such activities and use comply with applicable laws and data subject rights. Client shall provide legally adequate privacy notices to the required parties, and obtain all necessary consents from the data subjects of the Personal Data (and parental consents where applicable), including under the Children's Online Privacy Protection Act ("COPPA"), the General Data Protection Regulation ("GDPR"), the UK General Data Protection Regulation ("UK GDPR"), California Consumer Privacy Act ("CCPA") and similar laws. Client represents to Contractor that Client has provided all necessary privacy notices, obtained all necessary consents, and possesses lawful grounds to allow Client to access and use the Products in accordance with the terms of this Agreement and applicable laws. Client is responsible for notifying Contractor if any data collected or stored using the Products must be deleted under applicable laws.

8.4 Processing of Personal Data. The storage, processing, and transmission of Client Data is an essential feature of the Products. Client consents to Contractor and its contractors, and affiliates, collecting, storing, processing, and transmitting Client Data and Personal Data included therein. This Agreement incorporates Contractor's Privacy Policy, as may be updated from time to time.

8.5 Sharing Personal Data. In addition, certain Products may provide the ability to share content with other users and third parties, which may include the ability to share and display information about an individual (e.g., name, email address, username) when such functionality. By choosing to use the applicable Products and sharing functionality, Client consents to the sharing of such information for this purpose.

8.6 Diagnostics and Telemetry Data. Contractor may store diagnostic and telemetry data about the operation of the Products, including performance, usage, configuration, and errors ("Telemetry Data"). Contractor may periodically transmit and receive the Telemetry Data from the Products. Client Data does not include Telemetry Data. Contractor does not access or transmit Client Data as part of the Telemetry Data. Contractor retains all rights, title, and interest to the Telemetry Data.

8.7 Client Data Warranties. Client represents and warrants that it has obtained all rights, consents, and permissions necessary to input the Client Data into the Products and to grant the foregoing rights and licenses to Contractor, and that: (i) Client either owns or has the right to authorize Contractor's use of Client Data as set forth herein, (ii) the Client Data does not infringe, misappropriate, or otherwise violate any copyright, trademark, patents, trade secrets or other proprietary rights.

9. **Registration**. Contractor may request certain information in connection with the registration of Products, including contact name, email address, username, or password. By providing this information, Client consents to its collection and use by Contractor in accordance with Contractor's Privacy Policy, to provide non-promotional communications regarding the Products, including notices related to Client's account, transactions, update availability, Product recalls, safety concerns, or changes to our policies and terms. Client is responsible for maintaining the confidentiality of its username, password, and account information, and for all activities that occur in connection with Client's account and or under any username and password or account associated with Client's account. Client is also responsible for the accuracy of the information provided in connection with Client's account and any user thereunder, and for keeping such account information up to date. Client assumes all responsibility for any loss, theft, or other destruction of any data resulting from any failure to comply with these obligations.

10. **Feedback**. Client may provide suggestions, comments, or other feedback (collectively, "Feedback") to Contractor with respect to its products and services, including the Product. Feedback is voluntary and Contractor is not required to hold it in confidence. Contractor may use Feedback for any purpose without obligation of any kind. Client hereby grants Contractor an irrevocable, non-exclusive, perpetual, royalty-free license to use the Feedback in connection with Contractor's business, including enhancement of the Product.

11. **Support**. To the extent purchased by Client, Contractor shall provide the Support described in the applicable SOS for the Product licensed. Support includes periodic releases, and upgrades and updates to the Products as may be made generally available by Contractor to its Clients for no additional charge from time to time. Any new or additional features or functions may be offered separately and may be subject to additional access or license fees, support or maintenance charges, or other fees and costs. Contractor reserves the right to charge separately for any new Products, databases, and functionality that are not generally released to Contractor's Clients without charge.

12. **Training.** To the extent applicable, Contractor will provide the training services set forth in the SOS. Client shall reimburse

DocuSign Envelope ID: C764E410-020D-4DE5-99C8-4C5B8EF55B29

Contractor for all expenses and out-of-pocket costs related to onsite training.

13. **Term and Renewal**. This Agreement shall commence on the Effective Date and, subject to any earlier permitted termination in accordance with this Agreement, shall remain in effect with respect to each Product until the expiration of both the initial license term set forth for such Product in the applicable SOS relating thereto and any renewal terms therefore as provided in this Section 13. Each SOS will specify an initial term for the license granted with respect to each such Product.

14. **Termination**.

14.1 Termination for Cause. Either party may terminate this Agreement on written notice to the other party if the other party is in material breach of its obligations hereunder and fails to cure the breach within thirty (30) days of such written notice. In addition, either party may, in its sole discretion, elect to (i) terminate this Agreement on written notice to the other party upon the bankruptcy or insolvency of the other party or upon the commencement of any voluntary or involuntary winding up, or upon the filing of any petition seeking the winding up of the other party, or (ii) terminate any relevant SOSs or this Agreement, as the case may be, as and when permitted by and in accordance with Sections 6, 15.1, or 20.

14.2 Termination for Convenience. Client may terminate any SOS or this Agreement upon sixty (60) days advance written notice to Contractor, without cause if Client pays Contractor a cancellation fee equal to one hundred percent (100%) of the average actual fees charged for the prior four (4) month period, multiplied by the remaining billable months in the then applicable SOS term ("Cancellation Fee"). Client agrees to pay any Cancellation Fee within fifteen (15) days of the effective date of termination. Client acknowledges that such Cancellation Fee is not a penalty, but is intended to be liquidated damages, the actual damages being too difficult to determine in advance. Payment of the Cancellation Fee is the sole remedy for Client's early termination.

14.3 Effect of Termination. Upon any termination or expiration of a SOS or this Agreement, all rights and licenses granted to the Products will automatically terminate and Client shall have no further right to possess, access, or use the Products. Any termination of the Agreement shall terminate all outstanding SOS(s). On Contractor's request, Client shall provide Contractor with a signed written statement confirming that any Software has been permanently removed from Client's systems, if applicable. If termination does not result from a breach of this Agreement by Client, subject to the terms for any Third-Party Materials, Client shall have the limited right for thirty (30) days after such license termination to export or print Client entered information from the Product and not to enter any new information into the Product or use it for any other purpose. Client may, at its option and subject to the terms for any Third-Party Materials, extend the foregoing thirty (30) day period for up to six (6) months at Contractor's then current transition services rates, providing such rates do not exceed NASPO ValuePoint Master Agreement pricing; all access to the Product during this period shall be read-only. The following Sections shall survive any termination or expiration of this Agreement: 1, 5, 10, 13, 15 (to the extent of fees accrued prior to termination), 17, 19, 21, and 22.

15. **Fees**.

15.1 In general. Client shall pay Contractor the fees set forth in the applicable SOSs. Following the initial year of the license term set forth in the SOS, Contractor, in its sole discretion, may increase the fees due for a renewal term on sixty (60) days written notice prior to the commencement of the renewal term, which adjustment shall be effective on the commencement of the renewal term. During the initial license term set forth in the SOS, any such annual increase shall not exceed NASPO ValuePoint Master Agreement pricing.

15.2 Payment of Invoices. All invoices shall be paid by Client within thirty (30) days of invoice date. Payments not made within forty-five (45) days shall be subject to late charges of (i) one percent (1%) per month of the overdue amount or (ii) the maximum amount permitted under applicable law, whichever is less. In the event an invoice remains unpaid forty-six (46) or more days from the invoice date, Contractor may, in its discretion, terminate the applicable SOS and suspend access to Subscription Services. Client agrees to pay all court costs, fees, expenses and reasonable attorneys' fees incurred by Contractor in collecting delinquent fees. The applicable SOS may specify certain fees to be paid by electronic funds transfer ("EFT"). Client hereby authorizes Contractor to initiate an EFT from Client's bank account indicated in Schedule B in an amount equal to the fees set forth in the applicable SOS in accordance with the payment terms set forth in the applicable SOS. All payments made by EFT will be paid in immediately available funds.

15.3 Taxes. All taxes, duties, fees and other governmental charges of any kind (including sales and use taxes, but excluding taxes based on the gross revenues or net income of Contractor) that are imposed by or under the authority of any government or any political subdivision thereof on the fees for the Products and Support provided by Contractor under this Agreement, shall be borne solely by Client, unless Client can evidence its tax exemption and shall not be considered a part of a deduction from or an offset against such fees. If Client loses tax exempt status, it shall pay any taxes due as part of any renewal or payment. Client shall promptly notify Contractor if its tax status changes.

15.4 Travel and other Expenses. Client will pay, or reimburse Contractor for, any out-of-pocket expenses, including, without limitation, travel and travel-related expenses, incurred by Contractor at the request of or with the approval of Client in connection with the performance of this Agreement. Reasonable and customary expenses incurred by Contractor, including without limitation expenses incurred for travel, local transportation, lodging and meals, will be billed to Client at Contractor's actual cost.

DocuSign Envelope ID: C764E410-020D-4DE5-99C8-4C5B8EF55B29

15.5 Subpoenas and Other Legal Process. In the event Contractor is requested or authorized by Client or is required by government regulation, summons, subpoena or other legal process to produce its documents, Client Data, or personnel as witnesses with respect to the Products and other services provided to Client under this Agreement, Client will, so long as Contractor is not the subject of the investigation or proceeding in which the information is sought, reimburse Contractor at its then current standard professional services rates for its time and materials services, as well as the fees and expenses of its counsel, incurred in responding to such requests.

16. **Suspension of Access to Subscription Services.** The provisions of this Section apply only to Subscription Services. Contractor may, in its sole discretion, suspend Client's access to a Subscription Service for any of the following reasons (i) to prevent damages to, or degradation of, the Subscription Service or Contractor's systems; (ii) to comply with any law, regulation, court order, or other governmental request; (iii) to otherwise protect Contractor from potential legal liability; or (iv) in the event an invoice remains unpaid for more than thirty (30) or more days from the invoice date. Contractor shall use reasonable efforts to provide Client with notice prior to or promptly following any suspension of access to a Subscription Service. Contractor will restore access to the Subscription Service as soon as the event giving rise to suspension has been resolved. This Section shall not be construed as imposing any obligation or duty on Contractor to monitor Client's use of the Subscription Service or the data and other content uploaded by Client to the Subscription Service.

17. **Confidentiality.**

17.1 Each party's Confidential Information shall remain the sole and exclusive property of that party. Each party recognizes the importance of the other's Confidential Information. In particular, each party recognizes and agrees that the Confidential Information of the other is critical to its respective businesses and that neither party would enter into this Agreement without assurance that the other party will take appropriate steps designed to preserve the confidentiality of such information and the value thereof as provided in this Section 17 and elsewhere in this Agreement. The foregoing and the other terms of this Section 17 are and will remain subject to the disclaimers set forth at the end of Sections 7 and 19. Accordingly, each party agrees as follows:

(a) Each party (i) will treat as confidential and use measures that are reasonable, and at least as protective as those it uses to safeguard the confidentiality of its own Confidential Information (but in no event less than reasonable care), to preserve the confidentiality of any and all Confidential Information that it obtains from the other party and (ii) will use or, subject to the disclaimers in Sections 7 and 19, disclose such Confidential Information solely as permitted under this Agreement;

(b) Each party may disclose the other party's Confidential Information or provide access to the same to its responsible employees and agents who reasonably need to know or access such information in connection with the fulfillment of its obligations hereunder and may make copies of Confidential Information only to the extent permitted or contemplated under or pursuant to this Agreement; and

(c) To the extent required by applicable law or by lawful order or requirement of a court or governmental authority having competent jurisdiction over the receiving party, the receiving party may disclose Confidential Information in accordance with such law or order or requirement, subject to the following conditions: (i) as soon as possible after becoming aware of such law, order or requirement, and (ii) prior to disclosing Confidential Information pursuant thereto, the receiving party will so notify the disclosing party in writing and, if possible, the receiving party will provide the disclosing party notice not less than five (5) business days prior to the required disclosure. The receiving party will use reasonable efforts not to release Confidential Information pending the outcome of any measures taken by the disclosing party to contest, otherwise oppose or seek to limit such disclosure by the receiving party and any subsequent disclosure or use of Confidential Information that may result from such disclosure. The receiving party will cooperate with and aid the disclosing party regarding such measures. Notwithstanding any such compelled disclosure by the receiving party, such compelled disclosure will not otherwise affect the receiving party's obligations hereunder with respect to Confidential Information so disclosed.

17.2 Each party acknowledges that due to the unique nature of the other party's Confidential Information, the disclosing party will not have an adequate remedy in money or damages in the event of any unauthorized use or disclosure of its Confidential Information. In addition to any other remedies that may be available in law, in equity or otherwise, the disclosing party shall be entitled to seek injunctive relief to prevent such unauthorized use or disclosure.

17.3 On the expiration or termination of the Agreement, the receiving party shall promptly return to the disclosing party all copies, whether in written, electronic, or other form or media, of the disclosing party's Confidential Information, or destroy all such copies and, if requested by the disclosing party, certify in writing to the disclosing party that such Confidential Information has been destroyed. Each party's obligations of non-disclosure regarding Confidential Information are effective as of the Effective Date and will expire three years from the date first disclosed to the receiving party.

18. **Limited Warranty.** Contractor warrants to Client that for a period of sixty (60) days from delivery or initial use by Client, the Product shall operate in substantial conformity with its Documentation. Third Party Materials are subject to the terms set forth in the applicable third-party license agreements and disclaimers, if any, will be provided with the relevant Products. If Client purchases or procures any third-party products or services as part of the Products that are not provided with their own agreement or terms, Contractor shall pass through or assign to the Client the rights Contractor obtains from the manufacturers, vendors or licensors of such products and services (including

DocuSign Envelope ID: C764E410-020D-4DE5-99C8-4C5B8EF55B29

warranty and indemnification rights), all to the extent that such rights are assignable. To the extent that such rights are not assignable by Contractor, Contractor agrees that Client may assert or enforce any right Contractor may have to enforce such representations, warranties and covenants, or if such can only be enforced by Contractor under its own name, upon written request by Client, Contractor shall take all reasonable action requested by Client to enforce such representations, warranties and covenants. Notwithstanding the foregoing, Client's sole and exclusive remedy, and Contractor's sole and exclusive liability, for a breach of the foregoing warranties shall be the provision of Support services, replacement of a Product if necessary, or a credit for the pre-paid portion of the applicable fee for the affected Product, as determined in Contractor's sole discretion.

19. **Disclaimer of Warranties**. EXCEPT AS PROVIDED IN SECTION 18 (LIMITED WARRANTY), THE PRODUCTS, SUPPORT, TRAINING, AND ANY OTHER SERVICES ARE PROVIDED "AS IS" AND "AS-AVAILABLE," WITH ALL FAULTS, AND WITHOUT WARRANTIES OF ANY KIND. CONTRACTOR AND ITS VENDORS AND LICENSORS DISCLAIM ALL OTHER WARRANTIES, EXPRESS AND IMPLIED, INCLUDING, BUT NOT LIMITED TO, THE IMPLIED WARRANTIES OF MERCHANTABILITY, FITNESS FOR A PARTICULAR PURPOSE, QUIET ENJOYMENT, QUALITY OF INFORMATION, TITLE, AND NON-INFRINGEMENT. ALL THIRD-PARTY MATERIALS ARE PROVIDED AS-IS, WITHOUT WARRANTIES OF ANY KIND. CONTRACTOR MAKES NO WARRANTIES OF ANY KIND, EXPRESS OR IMPLIED, RELATING TO ANY PRESENT OR FUTURE METHODOLOGY EMPLOYED IN ITS GATHERING OR REPRODUCING OF ANY THIRD-PARTY MATERIAL, OR AS TO THE ACCURACY, CURRENCY OR COMPREHENSIVENESS OF THE SAME. CLIENT EXPRESSLY AGREES AND ACKNOWLEDGES THAT USE OF PRODUCTS IS AT CLIENT'S SOLE RISK. NO ORAL OR WRITTEN INFORMATION OR ADVICE GIVEN BY CONTRACTOR OR ITS AUTHORIZED REPRESENTATIVES SHALL CREATE ANY OTHER WARRANTIES OR IN ANY WAY INCREASE THE SCOPE OF CONTRACTOR'S OBLIGATIONS HEREUNDER. CONTRACTOR IS NOT ENGAGED IN RENDERING LEGAL OR OTHER PROFESSIONAL SERVICE. IF LEGAL OR OTHER EXPERT ASSISTANCE IS REQUIRED, THE SERVICES OF A COMPETENT PROFESSIONAL SHOULD BE SOUGHT. CLIENT ASSUMES ALL RESPONSIBILITY WITH RESPECT TO ANY DECISIONS OR ADVICE MADE OR GIVEN AS A RESULT OF THE USE OF THE PRODUCTS. CLIENT AGREES THAT THE PRODUCTS ARE NOT INTENDED TO REPLACE CLIENT'S PROFESSIONAL SKILL AND JUDGMENT AND ARE NOT A SUBSTITUTE FOR THE ADVICE OF AN ATTORNEY OR OTHER PROFESSIONAL.

THE PRODUCTS MAY BE USED TO ACCESS AND TRANSFER INFORMATION, INCLUDING CONFIDENTIAL INFORMATION, OVER THE INTERNET. CLIENT ACKNOWLEDGES AND AGREES THAT CONTRACTOR AND ITS VENDORS AND LICENSORS DO NOT OPERATE OR CONTROL THE INTERNET AND THAT: (I) VIRUSES, WORMS, TROJAN HORSES, OR OTHER UNDESIRABLE DATA OR SOFTWARE; OR (II) UNAUTHORIZED THIRD PARTIES (*E.G.*, HACKERS) MAY ATTEMPT TO OBTAIN ACCESS TO AND DAMAGE CLIENT'S DATA, WEB-SITES, COMPUTERS, OR NETWORKS. CONTRACTOR SHALL NOT BE RESPONSIBLE OR LIABLE FOR ANY SUCH ACTIVITIES NOR SHALL ANY SUCH ACTIVITIES CONSTITUTE A BREACH BY CONTRACTOR OF ITS OBLIGATIONS OF CONFIDENTIALITY HEREUNDER.

20. **Indemnity**. Contractor will indemnify and defend Client from any claim, demand, action, proceeding, judgment, or liability arising out of a claim by a third-party that Client's use of a Product in conformance with the terms of this Agreement infringes a United States patent issued as of the Effective Date or copyright of that third party. The foregoing indemnification obligation of Contractor is contingent upon Client promptly notifying Contractor in writing of such claim, permitting Contractor sole authority to control the defense or settlement of such claim, and providing Contractor reasonable assistance in connection therewith. If a claim of infringement under this Section 20 occurs, or if Contractor determines a claim is likely to occur, Contractor will have the right, in its sole discretion, to either: (i) procure for Client the right or license to continue to use the Product free of the infringement claim; or (ii) modify the Product to make it non-infringing, without loss of material functionality. If either of these remedies is not reasonably available to Contractor, Contractor may, in its sole discretion, immediately terminate the relevant SOS(s) and return the prorated portion of any prepaid, unused fees for future use of the infringing Product. Notwithstanding the foregoing, Contractor shall have no obligation with respect to any claim of infringement that is based upon or arises out of (the "Excluded Claims"): (xi) the use or combination of the Products with any hardware, software, products, data or other materials not provided by Contractor; (xii) modification or alteration of the Products by anyone other than Contractor; (xiii) Client's use of Products in excess of the rights granted in this Agreement; (xiv) any Third Party Materials; (xv) a breach of Client's representations or warranties; or (xvi) the negligence or more culpable acts or omissions (including recklessness or willful misconduct) by Client or any third party on behalf of Client. The provisions of this Section 20 state the sole and exclusive obligations and liability of Contractor and its licensors and suppliers for any claim of intellectual property infringement arising out of or relating to the Products or this Agreement and are in lieu of any implied warranties of non-infringement, all of which are expressly disclaimed.

21. **Limitation of Liability and Damages**. NEITHER CONTRACTOR NOR ITS VENDORS AND LICENSORS SHALL HAVE ANY LIABILITY TO CLIENT OR ANY THIRD PARTY FOR ANY LOSS OF PROFITS, SALES, BUSINESS,

DocuSign Envelope ID: C764E410-020D-4DE5-99C8-4C5B8EF55B29

DATA, OR OTHER INCIDENTAL, CONSEQUENTIAL, OR SPECIAL LOSS OR DAMAGE, INCLUDING EXEMPLARY AND PUNITIVE DAMAGES, OF ANY KIND OR NATURE RESULTING FROM OR ARISING OUT OF THIS AGREEMENT, THE PRODUCTS, AND ANY SERVICES RENDERED HEREUNDER. THE TOTAL LIABILITY OF CONTRACTOR AND ITS VENDORS AND LICENSORS TO CLIENT OR ANY THIRD PARTY ARISING OUT OF THIS AGREEMENT, THE PRODUCTS, AND ANY SERVICES RENDERED HEREUNDER FOR ANY AND ALL CLAIMS OR TYPES OF DAMAGES SHALL NOT EXCEED THE TOTAL FEES PAID OR PAYABLE HEREUNDER BY CLIENT DURING THE TWELVE (12) MONTHS IMMEDIATELY PRECEDING THE FIRST EVENT GIVING RISE TO LIABILITY. The allocations of liability in this Section 21 represent the agreed, bargained-for understanding of the parties and Contractor's compensation hereunder reflects such allocations. The limitation of liability and types of damages stated in this Agreement are intended by the parties to apply regardless of the form of lawsuit or claim a party may bring, whether in tort, contract or otherwise, and regardless of whether any limited remedy provided for in this Agreement fails of its essential purpose.

22. **General Provisions.**

22.1 Assignment. Client may not assign this Agreement without Contractor's prior written authorization, which shall not be unreasonably withheld. Any such permitted assignment, however, shall not increase the scope (including any material change in the size of Client's organization) of the license granted hereunder without payment of Contractor's then-current fees for any increased scope. Any delegation or assignment in violation of the foregoing provisions shall be void and deemed a material breach of this Agreement. This Agreement will bind and inure to the benefit of the parties and their respective successors and permitted assigns.

22.2 Amendment and Waiver. This Agreement may not be modified or amended except by a writing signed by both parties. No waiver of any breach of any provision of this Agreement shall constitute a waiver of any breach of the same or any other provision hereof, and no waiver shall be effective unless made in writing and signed by an authorized representative of the waiving party.

22.3 Governing Law. This Agreement will be governed by, and construed and interpreted according to, the substantive laws of the State of the Client. This choice of venue is intended by the parties to be mandatory and not permissive in nature, and to preclude the possibility of litigation between the parties with respect to, or arising out of, this Agreement in any jurisdiction other than that specified in this Section. Each party waives any right it may have to assert the doctrine of forum *non conveniens* or similar doctrine or theory or to object to venue with respect to any proceeding brought in accordance with this Section. EACH PARTY HEREBY WAIVES ITS RIGHT TO A JURY TRIAL IN CONNECTION WITH ANY DISPUTE OR LEGAL PROCEEDING ARISING OUT OF THIS AGREEMENT OR THE SUBJECT MATTER HEREOF.

22.4 Severability. In the event that any provision of this Agreement is held to be illegal, or otherwise unenforceable, such provision will be severed, stricken and replaced with a legal and enforceable provision which most closely reflects the intent of the parties with respect thereto and the remainder of this Agreement shall continue in full force and effect; provided, however, that if the severing and striking of such provision results in a material alteration of this Agreement not able to be appropriately addressed through a replacement provision as contemplated above, the remaining provisions of this Agreement shall be adjusted equitably so that no party benefits disproportionately.

22.5 Entire Agreement; Purpose and Effect of Agreement. This Agreement, together with the SOS(s) and any other exhibits and attachments hereto and thereto, constitutes the entire agreement between the parties regarding its subject matter and supersedes any and all prior or contemporaneous letters, memoranda, representations, discussions, negotiations, understandings and agreements, whether written or oral, with respect to such subject matter. In the event of a conflict between the body of this Agreement and any SOS, exhibit, other attachment, this Agreement, or the Client's purchase order, the Client's purchase order shall govern.

22.6 Notices. Any notice required or permitted to be given by either party under this Agreement will be made in writing and shall be deemed to have been received upon delivery by hand, by facsimile (followed by delivery of a hard copy thereof within five (5) business days of such facsimile) or via Federal Express, or an equivalent reputable courier service, expense prepaid, addressed to the party as set forth on the signature block hereof or to such other address as a party may designate in writing to the other party.

22.7 Relationship of Parties. The parties to this Agreement are independent contractors; there is no relationship of agency, partnership, joint venture, employment or franchise between the parties. Neither party has the authority to bind the other or to incur any obligation on its behalf.

22.8 Force Majeure. If either party is prevented from performing any of its obligations under this Agreement due to any cause beyond the party's reasonable control, including, without limitation, an act of God, fire, flood, explosion, war, strike, embargo, government regulation, civil or military authority, acts or omissions of carriers, transmitters, providers of telecommunications or Internet services, vandals, or hackers (a "force majeure event"), time for that party's performance will be extended for the period of the delay or inability to perform due to such occurrence without liability to the other party; provided, however, that Client will not be excused from the payment of any sums of money owed by Client to Contractor after the force majeure event concludes. In addition, neither party will have the

DocuSign Envelope ID: C764E410-020D-4DE5-99C8-4C5B8EF55B29

right to claim damages or to terminate this Agreement because of a force majeure event.

22.9 Reserved.

22.10 No Third-Party Beneficiaries. Except for Contractor's suppliers and licensors, this Agreement shall not be construed to make Licensed Entities or any other person or entity, a third-party beneficiary hereof.

22.11 Counterparts. This Agreement may be signed in counterparts, all of which upon execution and delivery shall be considered an original and together shall constitute one agreement. Signed facsimile copies of this Agreement will legally bind the parties to the same extent as original documents.

22.12 Export Control. Client agrees that it will not in any form export, re-export, resell, ship, or divert or permit to be exported, re-exported, resold, shipped or diverted, directly or indirectly, any product or technical data or software furnished hereunder, or the direct product of such technical data or software, in violation of the laws, regulations, rules or orders or any jurisdiction, including applicable import and export laws.

22.13 Government Restricted Rights. The Products are provided with Restricted Rights. Use, duplication or disclosure by the Government is subject to restrictions set forth in subparagraphs (a) through (d) of the Commercial Computer Software Restricted Rights at FAR clause 52.227-19 or in subparagraph (c)(1)(ii) of the Rights in Technical Data and Computer Software clause at DFARS 252.227-7013 et seq. or its successor. The Products are proprietary data, all rights of which are reserved under the copyright laws of the United States.

[End of Agreement; signature page follows]

Docusign Envelope ID: C5A7EC25-7D81-477F-96FC-7BBAA8533A8B

NASPO VALUEPOINT MASTER AGREEMENT AMENDMENT

State Agency
Department of Personnel and Administration, State Purchasing and Contracts Office ("State")

Contractor
Toshiba America Business Solutions, Inc.

Original Contract Number
188037

Amendment Contract Number
203632

Contract Performance Beginning Date
August 1, 2024

Current Contract Expiration Date
July 31, 2027

Contract Amendment Number: 4

THE PARTIES HERETO HAVE EXECUTED THIS AMENDMENT

Each person signing this Amendment represents and warrants that he or she is duly authorized to execute this Amendment and to bind the Party authorizing his or her signature.

CONTRACTOR
Toshiba America Business Solutions, Inc.

DocuSigned by:
Larry White
A6B11ECE7C8740D...

By: Larry White President & CEO

Date: 1/20/2026

STATE OF COLORADO
Jared S. Polis, Governor
Department of Personnel and Administration
State Purchasing and Contracts Office
Tony Gherardini, Executive Director

DocuSigned by:
John Chapman
EF45AFDEB51E414...

By: John Chapman, State Purchasing Manager

Date: 1/22/2026

STATE CONTROLLER
Robert Jaros, CPA, MBA, JD

DocuSigned by:
Amanda Carroll
2A9C40DF49BF4D5...

By: Amanda Carroll Central Contract Specialist

Amendment Effective Date: 1/22/2026

In accordance with §24-30-202, C.R.S., this Amendment is not valid until signed and dated above by the State Controller or an authorized delegate.

Docusign Envelope ID: C5A7EC25-7D81-477F-96FC-7BBAA8533A8B

1. PARTIES

This Amendment (the "Amendment") to the State of Colorado Master Agreement shown on the Signature and Cover Page for this Amendment (the "Contract") is entered into by and between the Contractor, and the State.

2. TERMINOLOGY

Except as specifically modified by this Amendment, all terms used in this Amendment that are defined in the Contract shall be construed and interpreted in accordance with the Contract.

3. AMENDMENT EFFECTIVE DATE

This Amendment shall not be valid or enforceable until its Effective Date. The State shall not be bound by any provision of this Amendment before that Amendment Effective Date.

4. FACTUAL RECITALS

A. The Parties entered into the Contract effective August 1, 2024, for the provision of Multi-Function Devices and Related Software, Services and Cloud Solutions, as set forth in Contract #188037.

B. The Parties modified the Contract effective May 23, 2024, to revise a definition, as well as to revise language in Attachment 1, as set forth in Amendment #1, Contract #191680.

C. The Parties modified the Contract effective July 30, 2024, to correct the Order of Precedence language in Amendment #1, as set forth in Amendment #2, Contract #193135.

D. The Parties modified the Contract effective July 9, 2025, to allow price increases related to unforeseen economic circumstances, as set forth in Amendment #3, CMS #200487.

5. PURPOSE

The purpose of this Amendment is to modify the Contract language to allow requests for price increases due to unforeseen economic circumstances.

6. MODIFICATIONS

The Contract, and all prior amendments thereto, shall be extended through July 31, 2027.

Docusign Envelope ID: C5A7EC25-7D81-477F-96FC-7BBAA8533A8B

7. LIMITS OF EFFECT

This Amendment is incorporated by reference into the Contract, and the Contract and all prior amendments or other modifications to the Contract, if any, remain in full force and effect except as specifically modified in this Amendment. Except for the Special Provisions contained in the Contract, in the event of any conflict, inconsistency, variance, or contradiction between the provisions of this Amendment and any of the provisions of the Contract or any prior modification to the Contract, the provisions of this Amendment shall in all respects supersede, govern, and control. The provisions of this Amendment shall only supersede, govern, and control over the Special Provisions contained in the Contract to the extent that this Amendment specifically modifies those Special Provisions.

STATE OF CALIFORNIA
PARTICIPATING ADDENDUM NUMBER 7-24-70-46-08
AMENDMENT 1

Multi-Function Devices and Related Software, Services, and Cloud Solutions
Colorado NASPO ValuePoint Master Agreement Number 188037
Toshiba America Business Solutions, Inc. (Contractor)

The parties mutually agree to amend Participating Addendum 7-24-70-46-08 as follows:

1) **Section 21. GENERATIVE ARTIFICIAL INTELLIGENCE (GENAI) REPORTING** is hereby deleted and replaced with the following:

21. GENERATIVE ARTIFICIAL INTELLIGENCE (GENAI)

DEFINITIONS:
For purposes of this Section, the following terms shall be given the meaning shown below. Capitalized terms used below and not defined in this Section shall have the meaning set forth in Section 1 (Definitions) or in the text of the IT General Provisions (06/21/2022).

Artificial Intelligence (AI): an engineered or machine-based system that varies in its level of autonomy and that can, for explicit or implicit objectives, infer from the input it receives how to generate outputs that can influence physical or virtual environments (Gov Code §§ 11549.64 & 11546.45.5).

GenAI Training Data: any content, information, or data that is used to train, tune, test, or validate a GenAI, including text, images, video, audio, code, or similar types of input.

Generated Data: any output, results, content, or other data that is produced by GenAI, including but not limited to text, images, video, audio, code, or similar types of output.

Generative AI (GenAI): an AI system that can generate derived synthetic content, including text, images, video, and audio, that emulates the structure and characteristics of the system's GenAI Training Data (Gov Code §11549.64).

Hallucination: Generated Data that is nonsensical, false, or misleading, and is not based on real or existing data, but is instead produced by bias or the GenAI's extrapolation or creative interpretation of its Gen AI Training Data.

Materially Impacts: shall have the same meaning set forth in State Administrative Manual (SAM) 4986.2.

Prompt: any written, spoken, or rendered information provided as a query, command, or other form of input, to any GenAI in connection with this Contract. For avoidance of doubt, Prompt includes any input automatically detected or created by the GenAI, as well as any derivate works of a Prompt or collection of Prompts.

GENAI DISCLOSURE OBLIGATIONS:

Disclosure Obligations:

a) Contractor must immediately notify the State in writing if it: (1) intends to provide GenAI as a Deliverable to the State; or (2) intends to utilize GenAI, including GenAI from third parties, to complete all or a portion of any Deliverable that materially impacts: (i) functionality of the System, (ii) risk to the State, or (iii) Contract performance. For avoidance of doubt, the term "materially impacts" shall have the same meaning set forth in State Administrative Manual (SAM) § 4986.2 Definitions for GenAI.
b) Such notification shall be provided to the State designee identified in this Contract.
c) At the direction of the State, Contractor shall discontinue the provision to the State of any previously unreported GenAI that results in a material impact to the functionality of the System, risk to the State, or Contract performance, as determined by the State.
d) If the use of previously undisclosed GenAI is approved by the State, then Contractor will update the Deliverable description, and the Parties will amend the Contract accordingly, which may include incorporating the GenAI Special Provisions into the Contract, at no additional cost to the State.

Failure to Disclose or Discontinue GenAI Use: The State, at its sole discretion, may consider Contractor's failure to disclose or discontinue the provision or use of GenAI as described above, to constitute a material breach of Contract when such failure results in a material impact to functionality of the System, risk to the State, or Contract performance. The State is entitled to seek any and all remedies available to it under law as a result of such breach, including but not limited to termination of the contract, for default pursuant to Section 23 (Termination for Default) of the IT General Provisions (06/21/2022).

All other terms and conditions of the Participating Addendum shall remain in full force and effect.

IN WITNESS WHEREOF, the parties have executed this Amendment as of the date of execution by both parties below.

STATE OF CALIFORNIA

Department of General Services
Agency Name

Julie Matthews Digitally signed by Julie Matthews Date: 2025.08.06 11:03:49 -07'00' 8/6/2025
Authorized Signature *Date Signed*

Julie Matthews, MAU2 Supervisor
Printed Name/Title of Person Signing

707 Third Street
West Sacramento, CA 95605
Address

CONTRACTOR

Toshiba America Business Solutions, Inc.
Contractor Name

07/09/2025
Authorized Signature *Date Signed*

Michael Torcaso/Senior Vice President & CFO
Printed Name/Title of Person Signing

25530 Commercentre Drive,
Lake Forest, CA 92630
Address

STATE OF CALIFORNIA
PARTICIPATING ADDENDUM NUMBER 7-24-70-46-08

Multi-Function Devices and Related Software, Services, and Cloud Solutions
Colorado NASPO ValuePoint Master Agreement Number 188037
Toshiba America Business Solutions, Inc. (Contractor)

This Participating Addendum Number 7-24-70-46-08 is entered into between the State of California, Department of General Services (hereafter referred to as "State" or "DGS") and Toshiba America Business Solutions, Inc. (hereafter referred to as "Contractor") under the lead state of Colorado NASPO ValuePoint Master Agreement Number 188037.

1. SCOPE

A. This Participating Addendum covers the purchase of Multi-Function Devices and Related Software, Services, and Cloud Solutions under the Colorado NASPO ValuePoint Master Agreement. The Colorado NASPO ValuePoint Master Agreement is hereby incorporated by reference. Product/service categories included under this Participating Addendum are identified in Section 5 (Available Products and Services).

B. This Participating Addendum is available for use by California state agencies and local governments. A local government is defined as any city, county, city and county, district, or other local governmental body, school district or corporation empowered to expend public funds. The State Agency Listing (https://www.ca.gov/agenciesall/) provides a comprehensive list of state agencies.

C. Each local government is to make its own determination whether this Participating Addendum and the Colorado NASPO ValuePoint Master Agreement are consistent with its procurement policies and regulations.

2. TERM

A. The term of this Participating Addendum shall begin August 1, 2024, or upon signature approval by the State whichever occurs later, and will end July 31, 2026, or upon termination by the State, whichever occurs first.

B. Lead state amendments to extend the NASPO ValuePoint Master Agreement term date are not automatically incorporated into this Participating Addendum. Extension(s) to the term of this Participating Addendum will be through a written amendment upon mutual agreement between the State and the Contractor.

C. Order placement and execution shall be on or before the expiration of this Participating Addendum. However, delivery of products or completion of services may be up to 120 days after the Participating Addendum expiration date.

3. TERMS AND CONDITIONS/INCORPORATION OF DOCUMENTS

A. Terms and conditions listed below are hereby incorporated by reference and made a part of this Participating Addendum as if attached herein and shall apply to the purchase of goods or services made under this Participating Addendum.

1) General Provisions – Information Technology (DGS PD-401 IT), effective 6/21/2022
2) General Provisions – Information Technology – Cloud Computing – Software as a Service (SaaS), effective 6/21/2022
3) Cloud Computing Special Provisions for Software as a Service (SaaS), effective 03/15/2018.

B. Terms can be viewed on the DGS Procurement Division website (https://www.dgs.ca.gov/PD/Resources/Page-Content/Procurement-Division-Resources-List-Folder/Required-Language-for-Solicitations-and-Contracts).

4. ORDER OF PRECEDENCE

A. In the event of any inconsistency between the articles, attachments, or provisions which constitute this agreement, the following descending order of precedence shall apply:

1) California Participating Addendum Number 7-24-70-46-08
2) Colorado NASPO ValuePoint Master Agreement Number 188037

5. AVAILABLE PRODUCTS AND SERVICES

A. The following product and service offerings from the Colorado NASPO ValuePoint Master Agreement Number 188037 are allowed under this Participating Addendum:

Products and Services:

- Group A – Multi-Function Devices, A3 – OEM only
- Group B – Multi-Function Devices, A4 – OEM and Non-OEM
- Group D – Single-function Printers – OEM and Non-OEM
- Group E – Large/Wide Format Equipment – OEM and Non-OEM
- Group G – Software – OEM and Non-OEM
- Group H – Consumable Supplies – OEM and Non-OEM
- Group I – Managed Print Services
- Sub-Group G1 – Software Related Services
- Sub-Group D1 - Specialty Printers (3D, receipt, barcode label, card, cable) – OEM and Non-OEM

6. RESTRICTIONS/DISALLOWED PRODUCTS AND SERVICES (STATE AGENCIES ONLY)

A. The following restrictions apply to state agency purchases under this Participating Addendum:

1) Leasing and Rental

2) Products:
   a) Remanufactured Equipment
   b) Imaging equipment that is not Energy Star certified
   c) Software containing “click wrap” agreements
   d) Not Specifically Priced (NSP) items not listed or priced in the NASPO ValuePoint Master Agreement Price Lists

3) Services:
   a) Mail Room Services
   b) Network and Data Security
   c) Records Management

B. Product and service categories that are available on mandatory California statewide contracts cannot be purchased from this Participating Addendum by state agencies without an exemption. State agencies are responsible for obtaining a mandatory statewide contract exemption from DGS prior to issuing a purchase order.

7. PRICING

A. Contractor’s pricing is outlined in the Colorado NASPO ValuePoint Master Agreement Number 188037.

B. Contractor shall notify the State Contract Administrator of any amendments and pricing adjustments approved and executed by the state of Colorado.

8. AUTHORIZED RESELLERS

C. Contractor may use State-approved Authorized Resellers under this Participating Addendum for sales and service functions as defined herein.

1) Authorized Resellers must accept purchase orders and accept payment from ordering agencies for products and services offered under this Participating Addendum.

2) Authorized Resellers are responsible for sending a copy of all purchase orders and invoices to the Contractor for compliance with quarterly usage reporting and administrative fee requirements.

3) All purchase documents to Authorized Resellers shall reference the Participating Addendum Number and Contractor Name.

D. Contractor shall be responsible for successful performance and compliance with all requirements in accordance with the terms and conditions under this Participating Addendum, even if work is performed by Authorized Resellers. All State policies, guidelines, and requirements shall apply to Authorized Resellers.

E. Contractor will be the sole point of contact with regard to Participating Addendum contractual matters, reporting, and administrative fee requirements.

F. Subject to the approval of the State, Authorized Resellers may be added on a quarterly basis during the term of the Participating Addendum. Contractors shall notify the State in writing of any deleted Authorized Resellers or changes to current Authorized Resellers' information at any time.

G. Contractor will be required to submit Authorized Reseller requests, in a format specified by the State, to the State Contract Administrator for approval.

H. State-approved Authorized Resellers will be posted on the State's Cal eProcure website.

9. SUBCONTRACTORS

Subcontractors will not be used for this Participating Addendum.

10. ORDERING AGENCY RESPONSIBILITIES

A. State agency and local government use of this Participating Addendum is optional.

B. State agencies and local governments must follow the ordering procedures outlined within the User Instructions guide, administered by the State Contract Administrator, to execute orders against this Participating Addendum. User Instructions are posted on the State's Cal eProcure website.

C. All purchase orders executed under this Participating Addendum shall include the Participating Addendum Number 7-24-70-46-08.

11. STATE AGENCY BUY RECYCLED CAMPAIGN (SABRC)

A. State agencies are required to report purchases made within the eleven product categories in the California Department of Resources Recycling and Recovery's State Agency Buy Recycled Campaign (SABRC) per Public Contract Code sections 12200-12217.

B. Contractor will be required to complete and return a Postconsumer Recycled-Content Certification form (https://calrecycle.ca.gov/buyrecycled/stateagency/vendored/form74guide/) upon request by the state agency.

12. DELIVERY

A. Delivery shall occur within thirty (30) days after receipt of order, or as negotiated between ordering agency and Contractor and included in the purchase order, or as otherwise stipulated in the NASPO ValuePoint Master Agreement.

B. Free On Board (F.O.B.) Destination, freight prepaid by the Contractor, to the ordering agency's receiving point.

13. INVOICING AND PAYMENT

A. Payment will be made in accordance with General Provisions – Information Technology Paragraph 30 (Required Payment Date).

B. Invoices shall be sent to the address identified in the ordering agency's purchase order. The Participating Addendum Number and ordering agency purchase order number shall appear on each invoice for all purchases placed under this Participating Addendum.

C. Contractor will accept the State of California credit card (CAL-Card) for payment of invoices.

14. USAGE REPORTING

A. Contractor shall submit usage reports on a quarterly basis to the State Contract Administrator for all California entity purchases using the report template attached hereto as Attachment A. The report is due even when there is no activity.

B. The State Contract Administrator reserves the right to modify Attachment A and require Contractor to provide additional order information during the course of this Participating Addendum.

C. The report shall be an Excel spreadsheet transmitted electronically to the DGS Cooperatives mailbox (PDCooperatives@dgs.ca.gov).

D. Any report that does not follow the required format or that excludes information will be deemed incomplete. Contractor will be responsible for submitting corrected reports within five (5) business days of the date of written notification from the State.

E. Tax must not be included in the report, even if it is on the purchase order.

F. Reports are due for each quarter as follows:

Reporting Period	Due Date
January 1 to March 31	April 30
April 1 to June 30	July 31
July 1 to September 30	October 31
October 1 to December 31	January 31

G. Failure to meet reporting requirements and submit the reports on a timely basis shall constitute grounds for suspension of this Participating Addendum.

H. Time extensions may be approved only if all due reports have been submitted to the State.

15. ADMINISTRATIVE FEE

A. Contractor is required to remit to DGS an administrative fee amount equal to 1.25% of the sales for the quarterly reporting period less freight, taxes, returned products and credits. (For example, if the net sales for the reporting quarter totals $100,000.00, the incentive fee due to DGS would be $1,250.00.)

B. The administrative fee shall not be included as an adjustment to Contractor's NASPO ValuePoint Master Agreement pricing.

C. The administrative fee shall not be invoiced or charged to the ordering agency.

D. Payment of the administrative fee is due irrespective of payment status from ordering agencies.

E. Payment may be made in the form of an electronic payment using the LPA Payment Portal website (https://www.dgs.ca.gov/PD/Services/Page-Content/Procurement-Division-Services-List-Folder/Access-LPA-Payment-Portal) or by submitting a check payable to the State of California, Department of General Services.

F. Administrative fee payments made by check must include the Participating Addendum Number on the check and be submitted to the following address:

Department of General Services
Procurement Division
Attn: MAPS Payment Processing
707 Third Street, 2nd Floor
West Sacramento, CA 95605

G. Administrative fee payments are due for each quarter as follows:

Reporting Period	Due Date
January 1 to March 31	April 30
April 1 to June 30	July 31
July 1 to September 30	October 31
October 1 to December 31	January 31

H. Failure to meet administrative fee requirements and submit fees on a timely basis shall constitute grounds for suspension of this Participating Addendum.

16. CONTRACT MANAGEMENT

A. The primary Contractor Contract Manager for this Participating Addendum shall be as follows:

Contractor	Contract Manager
Name:	Jeff Ballard
Phone:	(949) 462-6327
Email	Jeff.ballard@tabs.toshiba.com
Address:	Toshiba America Business Solutions, Inc. Attn: Jeff Ballard 25530 Commercentre Drive Lake Forest, CA 92630

B. The State Contract Administrator for this Participating Addendum shall be as follows:

State	Contract Administrator
Name:	Yolanda Tutt
Phone:	(279) 946-8401
Email	yolanda.tutt@dgs.ca.gov
Address:	State of California Department of General Services Procurement Division 707 Third Street, 2nd Floor, MS 2-202 West Sacramento, CA 95605

C. Should the contact information for either party change, the party will provide written notice with updated information no later than ten (10) business days after the change.

17. TERMINATION OF AGREEMENT

The State may terminate this Participating Addendum at any time upon thirty (30) days prior written notice to the Contractor. Upon termination or other expiration of this Participating Addendum, each party will assist the other party in orderly termination of the Participating Addendum and the transfer of all assets, tangible, and intangible, as may facilitate the orderly, non-disrupted business continuation of each party. This provision shall not relieve the Contractor of the obligation to perform under any purchase order or other similar ordering document executed prior to the termination becoming effective.

18. AMENDMENT

No amendment or variation of the terms of this Participating Addendum shall be valid unless made in writing, signed by the parties, and approved as required. No oral understanding or agreement not incorporated in the Participating Addendum is binding on any of the parties.

19. NEWS RELEASES

Unless otherwise exempted, news releases, endorsements, advertising, and social media content pertaining to this Participating Addendum shall not be made without prior written approval from the State.

20. EXECUTIVE ORDER N-6-22 – RUSSIA SANCTIONS

On March 4, 2022, Governor Gavin Newsom issued Executive Order N-6-22 (the EO) regarding Economic Sanctions against Russia and Russian entities and individuals. “Economic Sanctions” refers to sanctions imposed by the U.S. government in response to Russia’s actions in Ukraine, as well as any sanctions imposed under state law. The EO directs state agencies to terminate contracts with, and to refrain from entering any new contracts with, individuals or entities that are determined to be a target of Economic Sanctions. Accordingly, should the State determine Contractor is a target of Economic Sanctions or is conducting prohibited transactions with sanctioned individuals or entities, that shall be grounds for termination of this Participating Addendum. The State shall provide Contractor advance written notice of such termination, allowing Contractor at least thirty (30) calendar days to provide a written response. Termination shall be at the sole discretion of the State.

21. GENERATIVE ARTIFICIAL INTELLIGENCE (GENAI) REPORTING

The State of California seeks to realize the potential benefits of GenAI, through the development and deployment of GenAI tools, while balancing the risks of these new technologies.

Upon request by an ordering agency, Contractor must complete a GenAI Reporting and Fact Sheet (STD 1000) to identify if their solution or service includes, or makes available, any GenAI including, GenAI from third parties or subcontractors.

During the term of the contract, Contractor must notify the State in writing if their services or any work under this contract includes, or makes available, any previously unreported GenAI technology, including GenAI from third parties or subcontractors. Contractor shall immediately complete the GenAI Reporting and Factsheet (STD 1000) to notify the State of any new or previously unreported GenAI technology.

At the direction of the State, Contractor shall discontinue the use of any new or previously undisclosed GenAI technology that materially impacts functionality, risk or contract performance, until use of such GenAI technology has been approved by the State.

Failure to disclose GenAI use to the State and submit the GenAI Reporting and Factsheet (STD 1000) may be considered a breach of the contract by the State at its sole discretion and the State may consider such failure to disclose GenAI and/or failure to submit the GenAI Reporting and Factsheet (STD 1000) as grounds for the immediate termination of the contract. The State is entitled to seek any and all relief to which it may be entitled to as a result of such non-disclosure.

The State reserves the right to amend the contract, without additional cost, to incorporate GenAI Special Provisions into the contract at its sole discretion and/or terminate any contract that presents an unacceptable level of risk to the State.

If Contractor identifies GenAI in their solution, a copy of the STD 1000 must be submitted to the State Contract Administrator.

22. AGREEMENT

A. This Participating Addendum and the Master Agreement together with its exhibits and/or amendments, set forth the entire agreement between the parties with respect to the subject matter of all previous communications, representations, or agreements, whether oral or written, with respect to the subject matter hereof. Terms and conditions inconsistent with, contrary or in addition to the terms and conditions of this Participating Addendum and the Master Agreement, together with its exhibits and/or amendments, shall not be added to or incorporated into this Participating Addendum or the Master Agreement and its exhibits and/or amendments, by any subsequent purchase order or otherwise, and any such attempts to add or incorporate such terms and conditions are hereby rejected. The terms and conditions of this Participating Addendum and the Master Agreement and its exhibits and/or amendments shall prevail and govern in the case of any such inconsistent or additional terms.

B. By signing this Participating Addendum, Contractor agrees to offer the same products/services available on the Colorado NASPO ValuePoint Master Agreement Number 188037 at prices equal to or lower than the prices on that agreement.

IN WITNESS WHEREOF, the parties have executed this Participating Addendum as of the date of execution by both parties below.

STATE OF CALIFORNIA	CONTRACTOR
Department of General Services	Toshiba America Business Solutions, Inc.
Agency Name	*Contractor Name*
Julie Matthews — Digitally signed by Julie Matthews Date: 2024.07.31 08:18:43 -07'00' — 7/31/2024	7/29/2024
Authorized Signature *Date Signed*	*Authorized Signature* *Date Signed*
Julie Matthews, MAU2 Supervisor	Larry White, President and CEO
Printed Name/Title of Person Signing	*Printed Name/Title of Person Signing*
707 Third Street West Sacramento, CA 95605	25530 Commercentre Dr., Lake Forest, CA 92630
Address	*Address*

Burbank Unified School District
Administrative Services

REPORT TO THE BOARD

TO:	Members of the Board of Education
FROM:	Administrative Services
PREPARED BY:	Rachel Paghunasan, Director, Food Services
SUBMITTED BY:	Terri, Ramirez-Adams, Senior Administrative Secretary
DATE:	May 7, 2026
SUBJECT:	Approval of Purchase, Rush Trucks (Cafeteria Fund – Fund 13)

Background:
Burbank Unified School District operates a fleet of vehicles that support daily food service operations across multiple school sites. To maintain efficient operations, ensure staff safety, and support consistent service delivery, the District must replace an aging vehicle, add a transit van for smaller deliveries to safely deliver during school hours and procure three vehicles to support management staff traveling from site to site. These vehicles will improve operational flexibility and ensure the distribution of products and support management audits and supervision.

Discussion:
The District requires reliable transportation to support food service distribution, site visits, CDE audits and compliance inspections, and operational oversight. Vehicles are needed to travel from one site to another for the department to function efficiently and effectively.

Over time, an existing box truck has exceeded its optimal service life, resulting in increased maintenance costs, reduced reliability, and limitations in meeting current operational demands. This vehicle is essential for transporting food, supplies and equipment. Food Services is seeking replacement of this vehicle.

There has been a need to deliver smaller deliveries during school time when students and staff are around. Driving a large box truck has made delivering during this time unsafe, undeliverable, and wastes resources. The transit van will allow for “hot shot” orders during times when many students, parents, and staff are present and for smaller deliveries.

Additionally, our current management team uses their vehicles to transport food, equipment, and supplies to and from school sites, travelling to a minimum of 9 sites per school day to audit, supervise, and support staff. The 3 vehicles would be to support the Director and 2 Field Supervisors.

Fiscal Impact:

The purchase of these vehicles will have no fiscal impact to the General Fund with Fund 13 (Cafeteria Fund) supporting the purchase.

- Box Truck with Lift Gate - $102,155.30
- 2024 Ford Transit 150 Van with Lift Gate- $94,416.05
- 3 Ford Escape Hybrid - $114,450

Recommendation:

Administrative Services, recommends that the Board of Education approve the agreement between Burbank Unified School District and Rush Trucking to provide its product May 9, 2026. (13.0-53100.0-00000-37000-4410-7490000), and that authority to sign the contract pursuant to BUSD—AR 3314, as presented.

Rush Truck Center, Whittier
2450 Kella Avenue
Whittier, CA 90601

Retail Sales Order

SALES ORDER

Please enter my order for the following:
☑ New ☐ F.E.T. Applicable
☐ Used ☑ F.E.T. Exempt

Make	Ford	Series	Transit 350 HD
Year	2026	Body Type	HIGH ROOF EXT VAN
Color	OXFORD WHITE	Trim	XLL
Serial #	1FTRU8XG8TKA04366		
Stock #	1956065		
To be delivered on or about	4/28/2026		

Date 04/20/2026

BURBANK UNIFIED SCHOOL DISTRICT

Customer's Name
1900 W OLIVE AVE | BURBANK | CA | 91506-2438
Street | City | State | Zip
(818) 267-1525
Federal Tax ID # | Business Phone | Fax

Purchaser's Name

Street | City | State | Zip

Federal Tax ID # | Business Phone | Fax

Jameson Ashcraft
By Salesman

Vehicle will be Titled in _____ County.

*** Vehicle will be Registered in the State of _____.

2026 FORD TRANSIT VAN HIGH ROOF EXT	
LIFTGATE EXT PLATFORM	
FLOOR AND PARTITION ADDED FOR CARTS	
Sales Price	85,071.40
Factory Paid F.E.T.	0.00
F.E.T. Tire Credit	0.00
Total Factory Paid F.E.T.	0.00
Optional Extended Warranties	0.00
Sub-Total	85,071.40
Dealer Paid F.E.T. *	0.00
Local Taxes	8,967.15
Electronic Vehicle Registration or	37.00
Transfer Charge (not a governmental fee)	
(paid to Motor Vehicle Software Corp.)	
Tire Recycling Fee	10.50
Document Processing Charge	80.00
Administration Fee **	250.00
Delivered Price	94,416.05
Total Down Payment	0.00
Unpaid Balance Due on Delivery	94,416.05

LIENHOLDER INFORMATION

Date of Lien

Lien Holder

Manufacturer Rebate	0.00
Total Used Vehicle Allowance *	0.00
Less Total Balance Owed	0.00
Total Net Allowance on Used Vehicle(s)	0.00
Deposit or Credit Balance	0.00
Cash with Order	0.00
← -	0.00

*See Trade-in details on page 4

A DOCUMENT PROCESSING CHARGE IS NOT A GOVERNMENTAL FEE. A DOCUMENT PROCESSING CHARGE IS NOT REQUIRED BY LAW, BUT MAY BE CHARGED TO CUSTOMERS FOR HANDLING DOCUMENTS RELATING TO THE SALE. A DOCUMENT PROCESSING CHARGE MAY NOT EXCEED $80.00. THIS NOTICE IS REQUIRED BY LAW.

** THE ADMINISTRATIVE FEE IS NOT A GOVERNMENTAL FEE **

CARB Disclosure: A vehicle operated in California may be subject to the California Air Resources Board Advanced Clean Fleets regulations. It therefore could be subject to requirements to reduce emissions of air pollutants. For more information, please visit the CARB Advanced Clean Fleets webpage at https://ww2.arb.ca.gov/our-work/programs/advanced-clean-fleets.

***** State of registration is based on the state selected by the Customer when the vehicle was ordered. Customer is solely responsible for, and agrees to defend, indemnify and hold Rush harmless from, any reporting obligations and/or liability, including but not limited to penalties and fines, arising from registration and/or operation of a vehicle in a state other than the state of registration identified herein.**

*SUBJECT TO ADJUSTMENT – FINAL F.E.T. MAY VARY.
ANY F.E.T. VARIANCE RESPONSIBILITY OF DEALER

NOTICE: THE FOLLOWING ARE IMPORTANT PROVISIONS OF THIS ORDER

THIS ORDER CANCELS AND SUPERCEDES ANY PRIOR AGREEMENTS AND, AS OF THE DATE HEREOF, COMPRISES HE COMPLETE AND EXCLUSIVE STATEMENT OF THE TERMS OF THE AGREEMENT BETWEEN THE PARTIES.

IF ANY REPRESENTATIONS, SPECIFICATIONS OR OTHER AGREEMENTS ARE RELIED UPON BY CUSTOMER, THEY MUST BE IN WRITING AND SPECIFICALLY IDENTIFIED AND REFERENCED IN THIS ORDER; OTHERWISE, THEY WILL NOT BE BINDING ON OR ENFORCEABLE AGAINST DEALER.

THERE ARE NO UNWRITTEN ORAL AGREEMENTS BETWEEN THE PARTIES.

Customer, by the execution of this Order, offers to purchase the Product(s) described above upon the Terms and Conditions contained herein. Customer acknowledges that Customer has read the Terms and Conditions of this Order on Page 2 and has received a true copy of this Order and the Terms and Conditions.

INSURANCE

UNLESS A CHARGE IS INCLUDED IN THIS ORDER FOR PUBLIC LIABILITY OR PROPERTY DAMAGE INSURANCE, PAYMENT FOR SUCH COVERAGE IS NOT PROVIDED BY THIS ORDER.

NOTICE. No person is required as a condition precedent to financing the purchase of an automobile that any insurance be negotiated or purchased through a particular insurance agent or broker.

_____
Customer's Signature **Date**

OFFER RECEIVED BY: _____
SALES REPRESENTATIVE **Date**

OFFER ACCEPTED BY: _____
AUTHORIZED REPRESENTATIVE **Date**

Rush Truck Center, Whittier
2450 Kella Avenue
Whittier, CA 90601

Retail Sales Order

SALES ORDER

Please enter my order for the following:
☑ New ☐ F.E.T. Applicable
☐ Used ☑ F.E.T. Exempt

Make	Isuzu	Series	NPR-HD
Year	2025	Body Type	16 VAN BODY
Color	WHITE	Trim	
Serial #	54DC4W1DXSS209562		
Stock #	1925068		
To be delivered on or about	4/30/2026		

2025 ISUZU NPR HD	
16 VAN BODY	
RAILGATE LIFTGATE WITH EXT PLATFORM	
Sales Price	90,717.78
Factory Paid F.E.T.	0.00
F.E.T. Tire Credit	0.00
Total Factory Paid F.E.T.	0.00
Optional Extended Warranties	1,500.00
Sub-Total	92,217.78
Dealer Paid F.E.T. *	0.00
Local Taxes	9,560.02
Electronic Vehicle Registration or	37.00
Transfer Charge (not a governmental fee)	
(paid to Motor Vehicle Software Corp.)	
Tire Recycling Fee	10.50
Document Processing Charge	80.00
Administration Fee **	250.00
Delivered Price	102,155.30
Total Down Payment	0.00
Unpaid Balance Due on Delivery	102,155.30

Date 04/20/2026

BURBANK UNIFIED SCHOOL DISTRICT

Customer's Name
1900 W OLIVE AVE | BURBANK | CA | 91506-2438
Street | City | State | Zip
(818) 267-1525
Federal Tax ID # | Business Phone | Fax

Purchaser's Name

Street | City | State | Zip

Federal Tax ID # | Business Phone | Fax

Jameson Ashcraft
By Salesman

Vehicle will be Titled in _____ County.

*** Vehicle will be Registered in the State of _____.

LIENHOLDER INFORMATION

Date of Lien

Lien Holder

Manufacturer Rebate	0.00
Total Used Vehicle Allowance *	0.00
Less Total Balance Owed	0.00
Total Net Allowance on Used Vehicle(s)	0.00
Deposit or Credit Balance	0.00
Cash with Order	0.00
←	0.00

*See Trade-in details on page 4

A DOCUMENT PROCESSING CHARGE IS NOT A GOVERNMENTAL FEE. A DOCUMENT PROCESSING CHARGE IS NOT REQUIRED BY LAW, BUT MAY BE CHARGED TO CUSTOMERS FOR HANDLING DOCUMENTS RELATING TO THE SALE. A DOCUMENT PROCESSING CHARGE MAY NOT EXCEED $80.00. THIS NOTICE IS REQUIRED BY LAW.

** THE ADMINISTRATIVE FEE IS NOT A GOVERNMENTAL FEE **

CARB Disclosure: A vehicle operated in California may be subject to the California Air Resources Board Advanced Clean Fleets regulations. It therefore could be subject to requirements to reduce emissions of air pollutants. For more information, please visit the CARB Advanced Clean Fleets webpage at https://ww2.arb.ca.gov/our-work/programs/advanced-clean-fleets.

***** State of registration is based on the state selected by the Customer when the vehicle was ordered. Customer is solely responsible for, and agrees to defend, indemnify and hold Rush harmless from, any reporting obligations and/or liability, including but not limited to penalties and fines, arising from registration and/or operation of a vehicle in a state other than the state of registration identified herein.**

*SUBJECT TO ADJUSTMENT – FINAL F.E.T. MAY VARY.
ANY F.E.T. VARIANCE RESPONSIBILITY OF DEALER

NOTICE: THE FOLLOWING ARE IMPORTANT PROVISIONS OF THIS ORDER

THIS ORDER CANCELS AND SUPERCEDES ANY PRIOR AGREEMENTS AND, AS OF THE DATE HEREOF, COMPRISES HE COMPLETE AND EXCLUSIVE STATEMENT OF THE TERMS OF THE AGREEMENT BETWEEN THE PARTIES.

IF ANY REPRESENTATIONS, SPECIFICATIONS OR OTHER AGREEMENTS ARE RELIED UPON BY CUSTOMER, THEY MUST BE IN WRITING AND SPECIFICALLY IDENTIFIED AND REFERENCED IN THIS ORDER; OTHERWISE, THEY WILL NOT BE BINDING ON OR ENFORCEABLE AGAINST DEALER.

THERE ARE NO UNWRITTEN ORAL AGREEMENTS BETWEEN THE PARTIES.

Customer, by the execution of this Order, offers to purchase the Product(s) described above upon the Terms and Conditions contained herein. Customer acknowledges that Customer has read the Terms and Conditions of this Order on Page 2 and has received a true copy of this Order and the Terms and Conditions.

INSURANCE

UNLESS A CHARGE IS INCLUDED IN THIS ORDER FOR PUBLIC LIABILITY OR PROPERTY DAMAGE INSURANCE, PAYMENT FOR SUCH COVERAGE IS NOT PROVIDED BY THIS ORDER.

NOTICE. No person is required as a condition precedent to financing the purchase of an automobile that any insurance be negotiated or purchased through a particular insurance agent or broker.

_____
Customer's Signature **Date**

OFFER RECEIVED BY: _____
SALES REPRESENTATIVE **Date**

OFFER ACCEPTED BY: _____
AUTHORIZED REPRESENTATIVE **Date**

Outlook

RE: [EXTERNAL] Re: SNP Capital Expenditure Approval: Food Service Vehicles (Burbank USD)

From Heather Esemann <HEsemann@cde.ca.gov>
Date Mon 4/20/2026 2:21 PM
To Rachel Paghunasan <rachelpaghunasan@burbankusd.org>
Cc SNPCAFEFUNDQUESTIONS <SNPCAFEFUNDQUESTIONS@cde.ca.gov>

This sender is trusted.

01644-SN-19-PSD
Burbank Unified School District

APPROVAL: Vehicle Purchase request

CONTACT: Rachel Paghunasan, Director of Food Services
Date of request: April 17, 2026

Hello Rachel,

This email constitutes proof of prior approval *as required by Title 2, Code of Federal Regulations (2 CFR), Section 200.439(b).* ***This approval must be kept along with all documentation for a minimum of 3 years*** *per 2 CFR, Section 200.334. Documents must be available upon request during an administrative review. This approval is valid for one year from the issue date.*

The requested items are **approved, allowable expenses** using cafeteria funds. Burbank USD is requesting prior approval to purchase the following items:

Item	QTY	Estimated Cost
Ford Transit 150 Cargo van with lift gate	(1)	$94,416
Ford Escape Hybrid	(3)	$114,450
Box truck	(1)	$102,155

The transit van is to transfer product from site to site during peak times. The three Ford Escapes are for the director and 2 field supervisors to travel throughout district sites to audit and support the staff and program. The box truck is to replace one of the current box trucks

The district's cost estimate for this approval is **$311,021**. The SFA is currently on a budget agreement.

The expenditure must be used exclusively for the nonprofit school food service and shall not benefit any other program or the district. Failure to comply with this requirement will result in the entire cost being disallowed, and the district's general fund will be required to reimburse the nonprofit school food service account.

Please keep in mind that, under 2 *CFR* section 200.447, **insurance** costs are allowable expenses to the cafeteria fund when they are required by the terms of the program or represent a prudent business practice. This includes insurance coverage for vehicles used in program operations. It is important to note that the regulation also states that actual losses which could have been covered by permissible insurance, whether through a self-insurance program or otherwise, are unallowable unless expressly authorized in the Federal award. In other words, failing to maintain appropriate coverage could result in costs that cannot be charged to the program.

As part of this approval, you acknowledge that all equipment purchased with cafeteria funds must comply with Title 2, *Code of Federal Regulations* (*2 CFR*) sections 200.313 and 200.439. This includes proper disposal of equipment as outlined in *2 CFR,* Section 200.313(e). Also, ensuring that any proceeds from the sale of old equipment are either used to offset the cost of replacement or returned to the cafeteria fund. 200.313(c)(4).

Please ensure this purchase does not jeopardize the integrity of the non-profit school food service account. Also note that all allowable expenses are subject to the cost principles in 2 *CFR*, sections 200.402 to 200.411.

The procurement for the purchase of the approved equipment must be in compliance with 2 *CFR*, sections 200.310 to 200.327. For further information regarding Procurement Standards, please contact NSDProcurementReview@cde.ca.gov.

For additional guidance in the area of allowability please review the CDE's Allowable Costs webpage, and if you have additional questions, please contact the Resource Management Unit directly at snpcafefundquestions@cde.ca.gov.

Relevant Citations

1. Title 7*, Code of Federal Regulations (7 CFR)*, Section 210.14(a), "Resource Management"
2. Title 2, *Code of Federal Regulations (2 CFR)*, Section 200.439, "Equipment and other Capital Expenditures"
3. Title 2, *Code of Federal Regulations (2 CFR)*, Section 200.313, "Equipment"
4. Title 2, *Code of Federal Regulations (2 CFR)*, Section 200.447, "Insurance and indemnification"

Sincerely,

Heather Esemann
Analyst II
Nutrition Services Division
California Department of Education
hesemann@cde.ca.gov
916.327.0211

From: Rachel Paghunasan <rachelpaghunasan@burbankusd.org>
Sent: Monday, April 20, 2026 1:19 PM
To: Heather Esemann <HEsemann@cde.ca.gov>
Cc: SNPCAFEFUNDQUESTIONS <SNPCAFEFUNDQUESTIONS@cde.ca.gov>
Subject: [EXTERNAL] Re: SNP Capital Expenditure Approval: Food Service Vehicles (Burbank USD)

CAUTION! This email originated from outside the California Department of Education. Be careful of links and attachments.

Hi Heather,

There has been an adjustment on the cost of the vehicles:

- Box Truck with Lift Gate - $102,155.30
- 2024 Ford Transit 150 Van with Lift Gate- 94416.05
- 3 Ford Escape Hybrid - $114,450

I was not sure if I needed to seek approval with the increase. Main cost increase is due to the addition of the lift gates.

Thank you,

Rachel Paghunasan
Rachel Paghunasan
Director, Food Services
Burbank Unified School District
1900 W Olive Avenue, Burbank CA 91506
Phone: 818.729.4540 Fax: 818.729.4570

From: Heather Esemann <HEsemann@cde.ca.gov>
Sent: Friday, April 17, 2026 9:24 AM
To: Rachel Paghunasan <rachelpaghunasan@burbankusd.org>
Cc: SNPCAFEFUNDQUESTIONS <SNPCAFEFUNDQUESTIONS@cde.ca.gov>
Subject: SNP Capital Expenditure Approval: Food Service Vehicles (Burbank USD)

01644-SN-19-PSD
Burbank Unified School District

APPROVAL: Vehicle Purchase request

CONTACT: Rachel Paghunasan, Director of Food Services
Date of request: April 17, 2026

Hello Rachel,

This email constitutes proof of prior approval *as required by Title 2, Code of Federal Regulations (2 CFR), Section 200.439(b).* ***This approval must be kept along with all documentation for a minimum of 3 years*** *per 2 CFR, Section 200.334. Documents must be available upon request during an administrative review. This approval is valid for one year from the issue date.*

The requested items are **approved, allowable expenses** using cafeteria funds. Burbank USD is requesting prior approval to purchase the following items:

Item	QTY	Estimated Cost
Ford Transit 150 Cargo van	(1)	$65,000
Ford Escape Hybrid	(3)	$35,958 each
Box truck	(1)	$90,000

The transit van is to transfer product from site to site during peak times. The three Ford Escapes are for the director and 2 field supervisors to travel throughout district sites to audit and support the staff and program. The box truck is to replace one of the current box trucks

The district's cost estimate for this approval is **$262,874**. The SFA is currently on a budget agreement.

The expenditure must be used exclusively for the nonprofit school food service and shall not benefit any other program or the district. Failure to comply with this requirement will result in the entire cost being disallowed, and the district's general fund will be required to reimburse the nonprofit school food service account.

Please keep in mind that, under *2 CFR* section 200.447, **insurance** costs are allowable expenses to the cafeteria fund when they are required by the terms of the program or represent a prudent business practice. This includes insurance coverage for vehicles used in program operations. It is important to note that the regulation also states that actual losses which could have been covered by permissible insurance, whether through a self-insurance program or otherwise, are unallowable unless expressly authorized in the Federal award. In other words, failing to maintain appropriate coverage could result in costs that cannot be charged to the program.

As part of this approval, you acknowledge that all equipment purchased with cafeteria funds must comply with Title 2, *Code of Federal Regulations* (*2 CFR*) sections 200.313 and 200.439. This includes proper disposal of equipment as outlined in *2 CFR,* Section 200.313(e). Also, ensuring that any proceeds from the sale of old equipment are either used to offset the cost of replacement or returned to the cafeteria fund. 200.313(c)(4).

Please ensure this purchase does not jeopardize the integrity of the non-profit school food service account. Also note that all allowable expenses are subject to the cost principles in *2 CFR*, sections 200.402 to 200.411.

The procurement for the purchase of the approved equipment must be in compliance with *2 CFR*, sections 200.310 to 200.327. For further information regarding Procurement Standards, please contact NSDProcurementReview@cde.ca.gov.

For additional guidance in the area of allowability please review the CDE's Allowable Costs webpage, and if you have additional questions, please contact the Resource Management Unit directly at snpcafefundquestions@cde.ca.gov.

Relevant Citations

1. Title 7, *Code of Federal Regulations (7 CFR)*, Section 210.14(a), "Resource Management"
2. Title 2, *Code of Federal Regulations (2 CFR)*, Section 200.439, "Equipment and other Capital Expenditures"
3. Title 2, *Code of Federal Regulations (2 CFR)*, Section 200.313, "Equipment"

4. Title 2, *Code of Federal Regulations (2 CFR)*, Section 200.447, "Insurance and indemnification"

Sincerely,

Heather Esemann
Analyst II
Nutrition Services Division
California Department of Education
hesemann@cde.ca.gov
916.327.0211

From: Rachel Paghunasan <rachelpaghunasan@burbankusd.org>
Sent: Friday, April 17, 2026 6:52 AM
To: Heather Esemann <HEsemann@cde.ca.gov>
Subject: [EXTERNAL] Burbank USD - Purchase Approval Request

CAUTION! This email originated from outside the California Department of Education. Be careful of links and attachments.

Hi Heather,

I hope you are doing well. Months ago, we were talking about purchasing vehicles for my school district. I would like to request approval for the following:

- 1Ford Transit 150 Cargo $65,000 to transfer product from site to site during peak times
- 3 Ford Escape Hybrid @ $35,958 for use Director and 2 Field Supervisor to travel throughout district sites to audit and support
- 1 Box Truck to replace one of our current Box Trucks (previously approved) $90,000

Please let me know if you need more information from me to get approved.

Thank you,

Rachel Paghunasan

Rachel Paghunasan

Director, Food Services

Burbank Unified School District

1900 W Olive Avenue, Burbank CA 91506

Phone: 818.729.4540 Fax: 818.729.4570

Burbank Unified School District
Office of the Superintendent

REPORT TO THE BOARD

TO: Members of the Board of Education

FROM: Oscar Macias, Interim Superintendent

PREPARED BY: Stephanie Beauregard, Executive Assistant to the Board of Education/Superintendent

SUBMITTED BY: Stephanie Beauregard, Executive Assistant to the Board of Education/Superintendent

DATE: May 7, 2026

SUBJECT: Approval of the 2026-2027 Regular Board of Education Meeting Dates and Amendment to Bylaws 9320:Meetings and Notices

---

Background:
Regular meetings of the Board of Education will be held monthly. Special Board meetings may be scheduled as necessary throughout the year.

Discussion/Issues:
Listed below are the Board meeting dates for the 2026-2027 school year:

August 1, 2026	Special Meeting
August 6, 2026	
August 20, 2026	
September 17, 2026	
October 8, 2026	
October 10, 2026	Special Meeting
October 22, 2026	
November 19, 2026	
December 17, 2026	
January 9, 2027	Special Meeting
January 21, 2027	
February 11, 2027	
March 11, 2027	
April 8, 2027	
April 10, 2027	Special Meeting
April 22, 2027	
May 6, 2027	
May 20, 2027	
June 17, 2027	

Recommendation:
Oscar Macias, Interim Superintendent, recommends that the Board of Education approve its regular meeting dates for the 2026-2027 school year and amend Bylaw 9320:Meeting and Notices, as presented.

AMENDED

csba GAMUT Powered by simbli

Bylaw 9320: Meetings And Notices **Status:** ADOPTED

Original Adopted Date: 01/17/2013 | **Last Revised Date:** 04/04/2024 | **Last Reviewed Date:** 04/04/2024

Meetings of the Board of Education are conducted for the purpose of accomplishing district business. In accordance with state open meeting laws (Brown Act), the Board shall hold its meetings in public and shall conduct closed sessions during such meetings only as authorized by law. To encourage community involvement in the schools, Board meetings shall provide opportunities for questions and comments by members of the public. All meetings shall be conducted in accordance with law and the Board's bylaws, policies, and administrative regulations.

A Board meeting exists whenever a majority of Board members gather at the same time and location, including teleconference location, to hear, discuss, deliberate, or take action upon any item within the subject matter jurisdiction of the Board or district. (Government Code 54952.2)

A majority of the Board shall not, outside of an authorized meeting, use a series of communications of any kind, directly or through intermediaries, including social media and other electronic communications, to discuss, deliberate, or take action on any item that is within the subject matter jurisdiction of the Board. (Government Code 54952.2)

However, an employee or district official may engage in separate conversations with Board members in order to answer questions or provide information regarding an item within the subject matter jurisdiction of the Board, as long as that employee or district official does not communicate the comments or position of any Board members to other Board members. (Government Code 54952.2)

In order to help ensure the participation of individuals with disabilities at Board meetings, the Superintendent or designee shall provide appropriate disability-related accommodations or modifications upon request in accordance with the Americans with Disabilities Act. (Government Code 54953.2, 54954.1, 54954.2)

Regular Meetings

The Board shall hold ~~two~~ regular meeting(s) each month. Regular meetings shall be held at 4:30 p.m. ~~5:00~~ p.m. (Closed Session) and 6:00 p.m. (Open Session) ~~on the first and third Thursdays (unless otherwise noted) at Burbank City Hall~~.

At least 72 hours prior to a regular meeting, the agenda shall be posted at one or more locations freely accessible to members of the public and on the district's Internet website. (Government Code 54954.2)

Whenever agenda materials relating to an open session of a regular meeting are distributed

to the Board less than 72 hours before the meeting, the Superintendent or designee shall make the materials available for public inspection at a public office or location designated for that purpose. (Government Code 54957.5)

Special Meetings

Special meetings of the Board may be called at any time by the presiding officer or a majority of the Board members. However, a special meeting shall not be called regarding the salary, salary schedule, or other compensation of the Superintendent, assistant superintendent, or other management employee as described in Government Code 3511.1. (Government Code 54956)

Written notice of special meetings shall be delivered personally or by any other means to all Board members and the local media who have requested such notice in writing. The notice also shall be posted on the district's Internet website. The notice shall be received at least 24 hours before the time of the meeting. The notice shall also be posted at least 24 hours before the meeting in a location freely accessible to the public. The notice shall specify the time and location of the meeting and the business to be transacted or discussed. No other business shall be considered at this meeting. (Education Code 35144; Government Code 54956)

Any Board member may waive the 24-hour written notice requirement prior to the time of the meeting by filing a written waiver of notice with the clerk or secretary of the Board or by being present at the meeting at the time it convenes. (Government Code 54956)

Every notice of a special meeting shall provide an opportunity for members of the public to directly address the Board concerning any item that has been described in the meeting notice, before or during the item's consideration. (Government Code 54954.3)

Emergency Meetings

In the case of an *emergency situation* for which prompt action is necessary due to the disruption or threatened disruption of public facilities, the Board may hold an emergency meeting without complying with the 24-hour notice and/or 24-hour posting requirement for special meetings pursuant to Government Code 54956. The Board shall comply with all other requirements for special meetings during an emergency meeting. (Government Code 54956.5)

An *emergency situation* means either of the following: (Government Code 54956.5)

1. An emergency, which shall be defined as a work stoppage, crippling activity, or other activity that severely impairs public health and/or safety as determined by a majority of the members of the Board

2. A dire emergency, which shall be defined as a crippling disaster, mass destruction, terrorist activity, or threatened terrorist act that poses peril so immediate and

significant that requiring the Board to provide one-hour notice before holding an emergency meeting may endanger the public health and/or safety as determined by a majority of the members of the Board

Except in the case of a dire emergency, the Board president or designee shall give notice of the emergency meeting by telephone at least one hour before the meeting to the local media that have requested notice of special meetings. All telephone numbers provided by the media in the most recent request for notification must be exhausted. If telephone services are not functioning, the notice requirement of one hour is waived and, as soon after the meeting as possible, the Board shall notify those media representatives of the meeting and shall describe the purpose of the meeting and any action taken by the Board. In the case of a dire emergency, the Board president or designee shall give such notice at or near the time notification is given to the other members of the Board about the meeting. (Government Code 54956.5)

The minutes of the meeting, a list of persons the Board president or designee notified or attempted to notify, a copy of the roll call vote, and any actions taken at the meeting shall be posted for at least 10 days in a public place as soon after the meeting as possible. (Government Code 54956.5)

Adjourned/Continued Meetings

The Board may adjourn/continue any regular or special meeting to a later time and location that shall be specified in the order of adjournment. Less than a quorum of the Board may adjourn such a meeting. If no Board members are present, the secretary or the clerk may declare the meeting adjourned to a later time and shall give notice in the same manner required for special meetings. (Government Code 54955)

Within 24 hours after the time of adjournment, a copy of the order or notice of adjournment/continuance shall be conspicuously posted on or near the door of the place where the meeting was held. (Government Code 54955)

Study Sessions, Retreats, Public Forums, and Discussion Meetings

The Board may occasionally convene a study session or public forum to study an issue in more detail or to receive information from staff or feedback from members of the public.

The Board may also convene a retreat or discussion meeting to discuss Board roles and relationships.

Public notice shall be given in accordance with law when a quorum of the Board is attending a study session, retreat, public forum, or discussion meeting. All such meetings shall comply with the Brown Act and shall be held in open session and within district boundaries. Action items shall not be included on the agenda for these meetings.

Other Gatherings

Attendance by a majority of Board members at any of the following events is not subject to the Brown Act provided that a majority of the Board members do not discuss specific district business among themselves other than as part of the scheduled program: (Government Code 54952.2)

1. A conference or similar public gathering open to the public that involves a discussion of issues of general interest to the public or to school board members

2. An open, publicized meeting organized by a person or organization other than the district to address a topic of local community concern

3. An open and noticed meeting of another body of the district

4. An open and noticed meeting of a legislative body of another local agency

5. A purely social or ceremonial occasion

6. An open and noticed meeting of a standing committee of the Board, provided that the Board members who are not members of the standing committee attend only as observers

Individual contacts or conversations between a Board member and any other person are not subject to the Brown Act. (Government Code 54952.2)

Location of Meetings

Meetings shall not be held in a facility that prohibits the admittance of any person on the basis of ancestry or any characteristic listed in Government Code 11135. In addition, meetings shall not be held in a facility which is inaccessible to individuals with disabilities or where members of the public must make a payment or purchase in order to be admitted. (Government Code 54961)

Meetings shall be held within district boundaries, except to do any of the following: (Government Code 54954)

1. Comply with state or federal law or court order or attend a judicial or administrative proceeding to which the district is a party

2. Inspect real or personal property which cannot conveniently be brought into the district, provided that the topic of the meeting is limited to items directly related to the property

3. Participate in meetings or discussions of multiagency significance, provided these meetings are held within one of the other agencies' boundaries, with all participating agencies giving the notice required by law

4. Meet in the closest meeting facility if the district has no meeting facility within its boundaries or if its principal office is located outside the district

5. Meet with elected or appointed state or federal officials when a local meeting would be impractical, solely to discuss legislative or regulatory issues affecting the district over which the state or federal officials have jurisdiction

6. Meet in or near a facility owned by the district but located outside the district, provided the meeting agenda is limited to items directly related to that facility

7. Visit the office of the district's legal counsel for a closed session on pending litigation, when doing so would reduce legal fees or costs

8. Attend conferences on nonadversarial collective bargaining techniques

9. Interview residents of another district regarding the Board's potential employment of an applicant for Superintendent of the district

10. Interview a potential employee from another district

Meetings exempted from the boundary requirements, as specified in items #1-10 above, shall still be subject to the notice and open meeting requirements for regular and special meetings when a quorum of the Board attends the meeting.

If a fire, flood, earthquake, or other emergency renders the regular meeting place unsafe, meetings shall be held for the duration of the emergency at a location designated by the Board president or designee, who shall so inform all news media who have requested notice of special meetings by the most rapid available means of communication. (Government Code 54954)

Teleconferencing

A teleconference is a meeting of the Board in which Board members are in different locations, connected by electronic means through audio and/or video. (Government Code 54953)

The Board may use teleconferences for all purposes in connection with any meeting within the Board's subject matter jurisdiction. All votes taken during a teleconference meeting shall be by roll call. (Government Code 54953)

During the teleconference, at least a quorum of the members of the Board shall participate from locations within district boundaries. (Government Code 54953)

Agendas shall be posted at all teleconference locations and shall list all teleconference locations whenever they are posted elsewhere. Additional teleconference locations may be provided to the public. (Government Code 54953)

All teleconference locations shall be accessible to the public. All teleconferenced meetings shall be conducted in a manner that protects the statutory and constitutional rights of the parties or the public appearing before the Board, including the right of the public to address the Board directly at each teleconference location. (Government Code 54953)

All Board policies, administrative regulations, and bylaws shall apply equally to meetings that are teleconferenced. The Superintendent or designee shall facilitate public participation in the meeting at each teleconference location.

UNADOPTED MINUTES OF THE BOARD OF EDUCATION
BURBANK UNIFIED SCHOOL DISTRICT

April 9, 2026

Burbank Unified School District
1900 W. Olive Avenue
Third Floor – Board Room
Burbank, California

MEMBERS PRESENT:
Abby Pontzer Kamkar
Emily Weisberg
Laurette Cano
Kelsey Olson
Armond Aghakhanian

Also present were Oscar Macias, Interim Superintendent; Peter Knapik, Assistant Superintendent, Educational Services and Jason Hasty, Interim Assistant Superintendent, Business Services.

1) CALL TO ORDER

1.a) NOTICE TO THE PUBLIC

2) REQUESTS TO ADDRESS THE BOARD

2.a) Public Communications on Closed Session Agenda Items (In-Person Only)

Connie Trimble, BUSD employee and community member, addressed the Board regarding concerns about the HR Assistant Superintendent job description, leadership experience, and department structure. She emphasized the need for experienced HR leadership, particularly in negotiations, employee discipline, and Ed Code. She raised concerns about workload and compensation alignment. She recommended a revised HR structure with an Assistant Superintendent and two supervisors and also submitted letters from HR staff for Board review. Vice President Weisberg acknowledged receipt of the letters.

2.b) Staff Responses

2.c) Board Members' Responses

Meeting adjourned to Closed Session at 5:06 p.m.

3) CLOSED SESSION

3.a) Public Employee Discipline/Dismissal/Release Pursuant to Government Code 54957

3.b) Conference with Legal Counsel - Existing Litigation Pursuant to Government Code §54956.9 (b)(1) and (b)(3)(A) (OF 31,342)

Final Settlement Agreement for Special Education Students 960010909, 960031112, 960037940 and 960042924

3.c) Conference with Legal Counsel - Anticipated Litigation Pursuant to Government Code §54956.9 (d)(2): One potential case

4) RECONVENE IN PUBLIC SESSION/PLEDGE OF ALLEGIANCE/LAND ACKNOWLEDGEMENT

President Pontzer Kamkar invited Mr. Todd Laventure to lead in the Pledge of Allegiance.

5) REPORTING ON CLOSED SESSION

No items to report on Closed Session. No action was taken.

6) ADJUSTMENTS TO THE AGENDA

Member Olson would like to table 12k.

7) ITEMS FOR FUTURE AGENDAS

Vice President Weisberg would like to add Library appreciation week to the current appreciation list. Also, would like a report back on the list of all employee stipends as well as a report back to talk about dual immersion and looking at numbers at our Middle Schools.

Member Olson would like a legal report to be quarterly or ongoing. She would also like an update from the Budget Advisory Committee and asked if we have an update from LACOE since their time with us.

8) PRESENTATIONS / RECOGNITIONS

8.a) Adult School Updates

Interim Superintendent Macias introduced the Principal and Director of the Burbank Adult School.

BAS - Presentation - Board meeting - April 6. Standard.pdf (OF 31,343)

9) REPORTS FROM THE BOARD AND STAFF

9.a) Student Representatives

Natalie Garibyan, Burbank High School; Haily Hoang, John Burroughs High School; and Hayk Smbatyan, Monterey High School, will report on activities at their respective schools.

Hayk Smbatyan from Monterey High School, was absent.

9.b) Burbank Teacher's Association (BTA), California School Employees Association (CSEA), Burbank Association of School Administrators (BASA)

Sarah Schwartz; BTA President, Laura Bauman, CSEA President, and Laura Flosi, BASA President will report on association business.

Sarah Schwartz, BTA President, spoke regarding school safety infrastructure and State funding for our schools. She provided examples of aging systems and encouraged staff to improve camera coverage. She stated that the State budget deprives schools billions of dollars, promised by Prop 98. She urges the community to let state legislatures know this is not acceptable.

9.c) Reports from the Superintendent

Oscar Macias, Interim Superintendent, will report on items of interest to the Board of Education and the community.

Interim Superintendent Macias spoke about the Bridge Newsletter and thanked the community for the views. He thanked the PTA for their Honorary Service Awards reception. He addressed two incidents at John Burroughs High School and at Burbank High School and commended Principal Knoop and Principal Hubbell for their leadership and professionalism. Thanked the Burbank Police and Fire Departments for their support. He encouraged the community to visit Ben and Jerrys and get a free ice cream cone on April 14th. He also thanked Ms. Cuseo for her role in assisting with Human Resources.

10) REQUESTS TO ADDRESS THE BOARD

10.a) Public Communications on Agenda Items and on Any Subject Within the Jurisdiction of the School Board

Wendy Hunter Magdlen, community member, began with proposing a pilot. It is a revenue generator disguised as a wellness program to help get kids back in school. It's a nervous system reset before first period.

Linda Walmsley, community member, spoke regarding fundraising and donations. She expressed her gratitude for Dr. Aghakhanian and his continued efforts to recognize donors. She mentioned fundraising committees she and other staff participated in.

M'lisa Maclaren, community member and retiree, spoke regarding concerns with the Asst Superintendent of Human Resources job description, qualifications and experience. She asked the Board to reconsider the adoption of the job description.

Jeff Vander Borght, community member, spoke in reference to the letter he sent under the Brown Act code 54960.1. He mentioned the February warrant report that showed John Paramo's status from resignation to retirement. He hope the District takes corrective action and thanked member Olson for attending the last SFOC Meeting.

Daniel Hacking, community member and retiree, spoke regarding the cure and correct letter regarding John Paramo's change from resignation to retirement. The payment of Dr. Paramo's health benefits was not properly voted on.

Les Cohen, community member and BUSD retiree, spoke on the Sobel investigation. Spoke about Tabet's BPD ongoing investigation. He asked for an update with the Sobel Group investigation and requested a full report with the appropriate redactions.

Eric Haack, President of the Board of Directors of the Burbank Community Band, shared that Saturday April 11th there will be a community event at Dolores Huerta Middle School, starting at 2pm. Thanked staff at Huerta for their assistance and support.

10.b) Superintendent's Comments

Oscar Macias, Interim Superintendent, will respond to public comment.

Interim Superintendent Macias thanked all speakers for coming and sharing.

10.c) Board Members' Responses

Board Members will respond to public comment.

President Pontzer Kamkar indicated that she will not comment on the Assistant Superintendent of HR job description until the item comes up on the agenda. Addressed Mr. Cohen regarding the Sobel report and mentioned they are with Council on the Brown Act issue.

Vice President Weisberg thanked Sarah Schwartz for sharing about school safety. She thanked Mr. Haack for the amazing show.

11) REPORTS TO THE BOARD

11.a) Report on 2026 CAASPP Testing

Robyn Anders, Director of Instructional Technology & Accountability, Instructional Services will report to the Board of Education on 2026 CAASPP Testing.

Report on 2026 CAASPP Testing 040626.pdf (OF 31,344)

12) NEW AND/OR UNFINISHED BUSINESS

12.a) Adoption of Resolution 31 Proclaiming April 24, 2026 as the Burbank Unified School Districts Day of Commemoration of the Armenian Genocide of 1915-1923

Peter Knapik, Assistant Superintendent of Educational Services recommends that the Board of Education adopt Resolution 31 Proclaiming April 24, 2026, as the Burbank Unified School Districts Day of Commemoration of the Armenian Genocide of 1915-1923, as presented.

Armenian_Genocide_Day_Resolution_4_9_26.pdf (OF 31,345)

It was moved by Kelsey Olson, and seconded by Laurette Cano, that the Board of Education approve the item as recommended. The motion carried unanimously.

12.b) Adoption of Resolution 32 Proclaiming May 6, 2026 as Day of the Teacher and May 4, 2026 through May 8, 2026 as Burbank Unified School District Teacher Appreciation Week

Human Resources Services, recommends that the Board of Education adopt Resolution 32 Proclaiming May 6, 2026 as Day of the Teacher and May 4, 2026 through May 8, 2026 as Burbank Unified School District Teacher Appreciation Week, as presented.

Adoption of Resoluton 32 Proclaiming May 6, 2026 as Day of the Teacher and May 4, 2026 through May 8, 2026 as Burbank Unified School District Teacher Appr Week.pdf (OF 31,346)

It was moved by Emily Weisberg, and seconded by Armond Aghakhanian, that the Board of Education approve the item as recommended. The motion carried unanimously.

12.c) Adoption of Resolution 33 Proclaiming May 1, 2026 as School Lunch Hero Day

Human Resources Services, recommends that the Board of Education adopt Resolution 33 Proclaiming May 1, 2026 as School Lunch Hero Day, as presented.

Adoption of Resolution 33 Proclaiming May 1, 2026 as School Lunch Hero Day.pdf (OF 31,347)

It was moved by Emily Weisberg, and seconded by Kelsey Olson, that the Board of Education approve the item as recommended. The motion carried unanimously.

12.d) Adoption of Resolution 34 Proclaiming May 6, 2026 as School Nurse Day

Human Resources Services, recommends that the Board of Education adopt Resolution 34 Proclaiming May 6, 2026 as School Nurse Day, as presented.

Adoption of Resolution 34 Proclaiming May 6, 2026 as School Nurse Day.pdf (OF 31,348)

It was moved by Emily Weisberg, and seconded by Armond Aghakhanian, that the Board of Education approve the item as recommended. The motion carried unanimously.

12.e) Adoption of Resolution 35 Proclaiming the Week of May 4, 2026 through May 8, 2026, as Substitute Teacher Appreciation Week

Human Resources Services, recommends that the Board of Education adopt Resolution 35 Proclaiming the Week of May 4, 2026 through May 8, 2026, as Substitute Teacher Appreciation Week, as presented.

Adoption of Resolution 35 Proclaiming the week of May 4, 2026 through May 8, 2026, Substitute Teacher Appreciation Week.pdf (OF 31,349)

It was moved by Armond Aghakhanian, and seconded by Kelsey Olson, that the Board of Education approve the item as recommended. The motion carried unanimously.

12.f) Approval of Agreement with Ecolab Inc. for EcoSure SureSight Food Safety Assessment Services (Cafeteria Fund – Fund 13)

Administrative Services, recommends that the Board of Education approve the agreement between Burbank Unified School District and Ecolab Inc. for EcoSure SureSight food safety assessment services, effective April 10, 2026, through April 9, 2027, not to exceed $22,644 annually (13.0-53100.0-00000-37000-4410-7490000), with automatic annual renewal unless terminated in accordance with the agreement, and authorize execution of the agreement pursuant to BUSD AR 3314.

Ecosure Agreement 040926.pdf (OF 31,350)

It was moved by Kelsey Olson, and seconded by Emily Weisberg, that the Board of Education approve the item as recommended. The motion carried unanimously.

12.g) Approval of Professional Services Contract, Flewelling & Moody, Pool Storage Building and Shade Structure Burbank High School (Measure ABC Bond Fund)

The Administrative Services Department recommends that the Board of Education approve a professional services agreement between Burbank Unified School District and Flewelling & Moody for the Pool Storage Building and Shade Structure at Burbank High School, effective April 10, 2026 through April 9, 2027, not to exceed $34,800.00, including reimbursables (210-00000.0-81500-85000-6205-431-0000-0000) Measure ABC Bond Fund, and that the authority to sign the agreement be exercised pursuant to BUSD-AR3314, as presented.

PSA_FlewellingMoody_BHS_Pool Storage_Bond.pdf (OF 31,351)

It was moved by Armond Aghakhanian, and seconded by Kelsey Olson, that the Board of Education approve the item as recommended. The motion carried unanimously.

12.h) Amendment of Purchase from The Garland Company Inc., Roofing Material, Summer 2026 Roofing Project, Bret Harte Elementary School (Measure ABC Bond Fund)

The Administrative Services Department recommends that the Board of Education amends the purchase from The Garland Company, Inc. for roofing materials for the Summer 2026 Roofing Project at Bret Harte Elementary School, not to exceed $755,983.69 (210-00000-0-00000-85000-4310-205-0000-0000) Measure ABC Bond Fund, and that authority to sign the agreement be exercised pursuant to BUSD-AR3314, as presented. Note: This amendment is to correct the purchase amount as the quote that was board approved on March 5, 2026, for $546,067.23 was for the alternative roofing option and not the 40-year warranty option on all the roofs. The District decided to move forward with the 40 year warranty instead, bringing the not to exceed amount to $755,983.69.

4-9 Amend_CMAS_Garland_Harte_ABCBond.pdf (OF 31,352)

It was moved by Armond Aghakhanian, and seconded by Kelsey Olson, that the Board of Education approve the item as recommended. The motion carried unanimously.

12.i) Amendment of Purchase from The Garland Company Inc., Roofing Material, Summer 2026 Roofing Project, Providencia Elementary School (Measure ABC Bond Fund)

The Administrative Services Department recommends that the Board of Education amends the purchase from The Garland Company, Inc. for roofing materials for the Summer 2026 Roofing Project at Providencia Elementary School, not to exceed $566,311.07 (210-00000-0-00000-85000-4310-213-0000-0000) Measure ABC Bond Fund, and that authority to sign the agreement be exercised pursuant to BUSD-AR3314, as presented. Note: This amendment is to correct the purchase amount as the quote that was board approved on March 5, 2026, for $406,774.37 was for the alternative roofing option and not the 40-year warranty option on all the roofs. The District decided to move forward with the 40 year warranty instead, bringing the not to exceed amount to $566,311.07.

4-9 Amend_CMAS_Garland_Prov_ABCBond.pdf (OF 31,353)

It was moved by Armond Aghakhanian, and seconded by Laurette Cano, that the Board of Education approve the item as recommended. The motion carried unanimously.

12.j) First Reading of Revised Board Policy and Administrative Regulation 6146.1 High School Graduation Requirements

Peter Knapik, Assistant Superintendent of Educational Services, will facilitate the Board s first reading of the proposed revision to Board Policy and Administrative Regulation 6146.1 High School Graduation Requirements, as presented

First Reading of BP and AR 6146 High School Graduation Requirements 04.09.26.pdf (OF 31,354)

12.k) Approval of Boys and Girls Club Agreement for Child Care Paid by Expanded Learning Opportunities Program from July 1, 2026 through June 30, 2027

Peter Knapik, Assistant Superintendent of Educational Services, recommends that the Board of Education approve the Agreement between the Burbank Unified School District Boys and Girls Club of Burbank to provide childcare services at a 100% rate reduction paid by the Expanded Learning Opportunities Program (ELOP), not to exceed $1,900,000.00 (01.0-2600.0-0-00000-27000-5810-7429000), effective July 1, 2026 through June 30, 2027, and that authority to sign this agreement be exercised pursuant to BUSD AR 3314, as presented.

Agreement with BGCB for ELOP Funding Child Care 2026-27 4 9 26.pdf PULLED

Pulled

12.l) Approval of Revised Job Description, Assistant Superintendent, Human Resources

Oscar Macias, Interim Superintendent, recommends that the Board of Education approve proposed changes to the job description for the position of Assistant Superintendent, Human Resources, as presented.

Tabled until the April 16, 2026 Board Meeting

Approval Revised Job Asst Supt HR 040626.pdf TABLED

13) CONSENT AGENDA

Items pulled for discussion 13i, 13k, 13m and 13v.

13a-13j, 13l, 13n-13u and 13w-13z as presented.

13.a) Approval of Minutes

Minutes 3.16.26 UNOFFICIAL AM.pdf (OF 31,355)

13.b) Approval of the 2025-2026 Purchase Order Report

Administrative Services, recommends that the Board of Education approve purchase orders for 2025-2026 as listed through March 16, 2026, as presented.

2025-2026 PURCHASE ORDER REPORT.pdf (OF 31,356)

13.c) Approval of Personnel Report Number 25-26-17

Human Resources Services, recommends that the Board of Education approve Personnel Report number 25-26-17, covering Certificated and Classified personnel, and consisting of Pages 1 to 5 inclusive, as presented.

Personnel Report 25-26-17.pdf (OF 31,357)

13.d) Ratification of University Agreement- California State University, CalState Teach

Human Resources Services, recommends that the Board of Education ratify the University Agreement between the Burbank Unified School District and California State University, CalState Teach, to provide educational field experience for student teachers effective April 1, 2026 through until three (3) years on March 1, 2029, or until terminated by either party, and that authority to sign the Agreement be exercised pursuant to BUSD--AR 3314, as presented.

Ratification of University Agreement- California State University, CalState Teach.pdf (OF 31,358)

13.e) Amended Agreement for Professional Services (Human Resources)

Human Resources Services, recommends that the Board of Education amend the Agreement for Professional Services between Burbank Unified School District and Alpha Interpreters, to provide American Sign Language interpreting to employees with an increase of $35,000.00 (010-00000.0-00000-72000-5850-7550000), effective August 1, 2025 through June 30, 2026, and that authority to sign the agreement be pursuant to BUSD-AR 3314, as presented.

Amended Agreement for Professional Services (Human Resources).pdf (OF 31,359)

13.f) Ratification of John Burroughs High School (Overnight) Field Trip

Peter Knapik, Assistant Superintendent of Educational Services, recommends that the Board of Education ratify the John Burroughs High School SkillsUSA Teams (Overnight) Field Trip request to participate in the 59th Annual Skills USA Leadership Conference & Skills Competition Thursday, April 9, 2026, through Sunday, April 12, 2026, as presented

JBHS Skills USA Overnight Field Trip 4 9 26.pdf (OF 31,360)

13.g) John Burroughs High School Construction Design Team (Overnight) Field Trip

Peter Knapik, Assistant Superintendent of Educational Services, recommends that the Board of Education approve the John Burroughs High School Construction Design Build team (Overnight) Field Trip request to participate in the Construction Industry Education Foundation Competition Tuesday, April 21, 2026 through Thursday, April 23, 2026, as presented.

JBHS Construction design build team Overnight Field Trip 4 9 26.pdf (OF 31,361)

13.h) Burbank High School Football Team (Overnight) Field Trip

Peter Knapik, Assistant Superintendent of Educational Services, recommends that the Board of Education approve the Burbank High School Football Team (Overnight) Field Trip request to participate in an away camp in Hume, CA from Friday, May 8, 2026 through Sunday, May 10, 2026, as presented.

BHS football Team Overnight Field Trip 4 9 26.pdf (OF 31,362)

13.i) Approval of Amended Agreement for Professional Services Provided by Linguabee LLC (Special Education)

Peter Knapik, Assistant Superintendent of Educational Services recommends that the Board of Education amend an agreement between the Burbank Unified School District and Linguabee LLC, to provide interpreting and translation for Burbank students, not to exceed $241,000 (01.0-65000.0-57602-11901-5850-7440000), effective July 1, 2025 through June 30, 2026, and that authority to sign the agreement be exercised pursuant to BUSD-AR 3314, as presented. Note: The original approval date was June 18, 2025 for a total not to exceed $175,000. Due to an increase in student need, this amendment adds an additional $66,000 to the agreement for a new not to exceed total of $241,000.

SPED Professional Services Linguabee_Amendment.pdf (OF 31,363)

Vice President Weisberg motion, Member Aghakhanian seconded.
Motion passed unanimously, 5-0.

13.j) Ratification of Agreement for Professional Services Provided by Burbank Optometric Center, Inc. for Special Education Students

Peter Knapik, Assistant Superintendent of Educational Services, recommends that the Board of Education ratify an agreement between the Burbank Unified School District and Burbank Optometric Center, Inc., to provide a developmental vision evaluation, not to exceed $525 (01.0-65000.0-57602-11900-5850-744000) for special education student 960027543, effective March 17, 2026 through June 30, 2026, and that authority to sign the agreement be exercised pursuant to BUSD-AR 3314, as presented.

SPED Student 960027543 Burbank Optombetric_Ratification.pdf (OF 31,364)

13.k) Approval of Memorandum of Understanding (MOU) between Burbank Unified School District Burbank Adult School and Kay Dermatology

Peter Knapik, Assistant Superintendent of Education Services, recommends that the Board of Education approve the Memorandum of Understanding (MOU) between Burbank Unified School District Burbank Adult School and Kay Dermatology as presented.

BAS KayDermatology Agreement 4 9 26.pdf TABLED

13.l) Approval of Memorandum of Understanding (MOU) between Burbank Unified School District Burbank Adult School and Masrour & Harouni Chiropractic, Inc

Peter Knapik, Assistant Superintendent, Education Services, recommends that the Board of Education approve the Memorandum of Understanding (MOU) between Burbank Unified School District-Burbank Adult School and Masrour & Harouni Chiropractic, Inc., as presented.

BAS Masrour Harouni Chiro 4 16 26.pdf (OF 31,365)

13.m) Approval of Amended Agreement for Professional Services Provided by Alpha Interpreting Agency, Corp. for Special Education Students

Peter Knapik, Assistant Superintendent of Education Services, recommends that the Board of Education amend an agreement between Burbank Unified School District and Alpha Interpreting Agency, Corp., to provide interpreters/translators for deaf and hard of hearing Special Education students, not to exceed $2,075,000 (01.0-65000.0-57602-11900-5850-7440000), effective July 1, 2025 through June 30, 2026 and that authority to sign the agreement be exercised pursuant to BUSD-AR 3314, as presented. Note: The original approval date was June 18, 2025 for a total not to exceed $700,000. A second amendment was approved on December 11, 2025 to add $500,000. Due to increased need, this amendment adds an additional $875,000 for a new not to exceed amount of $2,075,000.

SPED Professional Services Alpha Interpreting_Amendment.pdf TABLED

13.n) Approval of Final Settlement Agreement (Special Education)

Peter Knapik, Assistant Superintendent of Educational Services, recommends that the Board of Education approve Final Settlement Agreement for Special Education student 960042924, not to exceed $5,000 (01.0-65000.0-50010-36000-5813-7440000), March 20, 2026 through May 31, 2027 and that authority to sign the agreement be exercised pursuant to BUSD-AR 3314, as presented.

SPED Student 960042924 Settlement Agreement.pdf (OF 31,366)

13.o) Approval of Final Settlement Agreement (Special Education)

Peter Knapik, Assistant Superintendent of Educational Services, recommends that the Board of Education approve Final Settlement Agreement for Special Education student 960037940, at no additional cost to the district, (01.0-65000.0-50010-36000-5813-7440000), March 12, 2026 through May 27, 2027 and that authority to sign the agreement be exercised pursuant to BUSD-AR 3314, as presented.

SPED Student 960037940 Settlement Agreement.pdf (OF 31,367)

13.p) Approval of Final Settlement Agreement (Special Education)

Peter Knapik, Assistant Superintendent of Educational Services, recommends that the Board of Education approve Final Settlement Agreement for Special Education student 960010909, total not to exceed $26,965.26, (01.0-65000.0-50010-36000-5813-

7440000), January 7, 2026 through May 27, 2027 and that authority to sign the agreement be exercised pursuant to BUSD-AR 3314, as presented.

SPED Student 960010909 Settlement Agreement.pdf (OF 31,368)

13.q) Approval of Final Settlement Agreement (Special Education)

Peter Knapik, Assistant Superintendent of Educational Services, recommends that the Board of Education approve Final Settlement Agreement for Special Education student 960031112, total not to exceed $80,421, (01.0-65000.0-50010-36000-5813-7440000), July 1, 2025 through August 30, 2026 and that authority to sign the agreement be exercised pursuant to BUSD-AR 3314, as presented.

SPED Student 960031112 Settlement Agreement.pdf (OF 31,369)

13.r) Approval of Instructional Consultant Services

Peter Knapik, Assistant Superintendent of Educational Services, recommends that the Board of Education approve the instructional consultant services for on-site student learning support and staff development and exercise authority to sign the agreements pursuant to BUSD-AR 3314, as presented.

Approval of Instructional Consultants 4 9 26 redacted.pdf (OF 31,370)

13.s) Ratification of Agreement for Instructional Consultant Services

Peter Knapik, Assistant Superintendent of Educational Services, recommends that the Board of Education ratify the instructional consultant services for on-site student learning support and staff development and exercise authority to sign the agreements pursuant to BUSD-AR 3314, as presented.

Ratification of Instructional Consultants Consent 4 9 26 redacted.pdf (OF 31,371)

13.t) Approval of Amended Agreement for Professional Services, Lozano Smith, Attorneys at Law, (General, Bond, and Special Education Funds)

Administrative Services, recommends that the Board of Education approve an agreement between the Burbank Unified School District and Lozano Smith, Attorneys at Law, to provide specialized legal services in the area of facilities and construction, effective, July 1, 2025 through June 30, 2026, not to exceed $503,000 (01.0-00000.0-00000-72000-5820-7401000) (General Fund) and (21.0-00000.0-00000-85000-5820-7400000) (Bond Fund) and (01.0-65000.0-50010-21000-5820-7440000) (Special Education Fund), and that authority to sign the agreement be exercised pursuant to BUSD—AR 3314, as presented. Note: The agreement was originally ratified on September 4, 2025 for a total not to exceed $403,000. This amendment increases the amount by $100,000 (General Fund), due to the unexpected cost of ongoing cases. The new not to exceed amount is $503,000.

Lozano Smith amended 25-26 040926.pdf (OF 31,372)

13.u) Approval of Award of Contract, Reliable Floor Covering Inc., CUPCCAA Bid 2526-017, Furnish and Install Flooring in Three (3) Rooms, Burbank Adult School (Adult Ed Fund)

The Administrative Services Department recommends that the Board of Education approve an award of contract between Burbank Unified School District and Reliable Floor Covering Inc., for the CUPCCAA Bid 2526-017 Furnish and Install Flooring in Three (3) Rooms at Burbank Adult School, effective April 10, 2026 through April 9, 2027, not to exceed $28,980.00 (11.0-63910.0-41102-10000-6250-5330000) Adult Ed Fund, and that the authority to sign the agreement be exercised pursuant to BUSD-AR3314, as presented.

4-9 AOC_Reliable Flooring_Adult School.pdf (OF 31,373)

13.v) Approval of Additive Change Order No.1, Sierra School Equipment Co., Furnish and Install New Crusader Chairs, Auditorium, Roosevelt Elementary (Gift Fund)

The Administrative Services Department recommends that the Board of Education approve additive change order No.1 between Burbank Unified School District and Sierra School Equipment Co., for the Furnish and Install of New Crusader Chairs in the Auditorium at Roosevelt Elementary, not to exceed $137,092.00 (010-90820-0-11100-10000-6405-214-0000-0000) Gift Fund, and that authority to sign the contract be exercised pursuant to BUSD-AR 3314, as presented. Note: The $3,000 increase, bringing the not to exceed to $137,092.00, is to include the additional labor mobilization to offload new auditorium seating product and store on auditorium stage. Sierra School Equipment Co., was notified on March 23, 2026, the site would not be ready for the installation of new seats on the previously agreed upon installation date of March 26, 2026, due to reflooring. The new auditorium seating product was already in transit by the time Sierra School Equipment Co., was informed necessitating an additional labor mobilization to offload product.

4-9 AddCO1_Sierra Equipment_Roosevelt_Gift.pdf (OF 31,374)

Member Aghakhanian motioned and Member Olson seconded.
Motion passed unanimously, 5-0.

13.w) Approval of Renewal of Agreement with NTT for Cisco Flex Licenses (General Fund)

The Technology Services Department recommends that the Board of Education approve the renewal of agreement with NTT for Cisco Flex Licenses, not to exceed $315,658.08 (01.0-00000.0-00000-77000-5840-7730000) (General Fund), effective May 17, 2026 through May 17, 2029, and that authority to sign the agreement be exercised pursuant to BUSD 3314, as presented.

Approval_Renewal Agreement_NTT Flex_040926.pdf (OF 31,375)

13.x) Ratification of Agreement for Professional Services Provided by SoCal Psychology Center for Special Education

Peter Knapik, Assistant Superintendent of Educational Services, recommends that the Board of Education ratify an agreement between the Burbank Unified School District and SoCal Psychology Center, to provide a psychoeducational IEE, not to exceed $6,500 (01.0-65000.0-57602-11900-5850-744000) for Special Education student 960043433, effective March 26, 2026 through December 30, 2026, and that authority to sign the agreement be exercised pursuant to BUSD-AR 3314, as presented.

SPED Student 960043433 SoCal Psychology Center_Ratification.pdf (OF 31,376)

13.y) Ratification of Reimbursement to Parent for Transportation (Special Education)

Peter Knapik, Assistant Superintendent of Educational Services, recommends that the Board of Education ratify reimbursement to the parent of Special Education student 960045365 to visit student who attends a Non Public School (NPS) outside the local area and per their IEP, not to exceed $4,000, effective March 10, 2026 through September 11, 2026, (01.0-65000.0-50010-36000-5813-7440000), and that authority to sign the agreement be exercised pursuant to BUSD-AR 3314, as presented.

SPED Student 960045365 Parent Reimbursement_Ratification.pdf (OF 31,377)

13.z) Ratification of Agreement for Professional Services Provided by Karen Lynn Epport, Ph.D. (Special Education)

Peter Knapik, Assistant Superintendent of Educational Services, recommends that the Board of Education ratify an agreement between the Burbank Unified School District and Karen Lynn Epport, Ph.D., to provide a psychoeducational and speech and language IEE, not to exceed $10,000 (01.0-65000.0-57602-11901-5850-744000) for Special Education student 960039691, effective March 24, 2026 through December 31, 2026, and that authority to sign the agreement be exercised pursuant to BUSD-AR 3314, as presented.

SPED Student 960039691 Dr. Karen Epport_Ratification.pdf (OF 31,378)

It was moved by Emily Weisberg, and seconded by Kelsey Olson, that the Board of Education approve the item as recommended. The motion carried unanimously.

14) REPORTS FROM BOARD MEMBERS

14.a) Reports from Board Members

Board of Education members will report on items within the jurisdiction of the Board.

Member Olson shared that she attended the Tri-City track meet and had a great time. She shared her group of Kindergartners went to City Hall and met the Mayor as well as a tour of the Police department and thanked the community for the meaningful experience.

President Pontzer Kamkar gave shout out to the Edison ASB and recognized them for raising food for people in need in our community.

Member Aghakhanian gave a shout out to the UCLA Women's Basketball team for their Championship.

Vice President Weisberg shared that the Burbank Public Library will roll out their new Bookmobile.

Member Cano mentioned the Library is still asking for input on the design for the new Central Library. She also stated she would like a header on all pages of the minutes with the dates from the Board date they are referring to.

15) ADJOURNMENT

Meeting adjourned at 10:03 p.m.

_____
OSCAR MACIAS, INTERIM SUPERINTENDENT
SECRETARY OF THE BOARD

May 7, 2026
_____
DATE

_____
LAURETTE CANO, CLERK

UNADOPTED MINUTES OF THE BOARD OF EDUCATION
BURBANK UNIFIED SCHOOL DISTRICT

April 16, 2026

Burbank City Hall
275 E. Olive Avenue
Burbank, California

MEMBERS PRESENT:
Abby Pontzer Kamkar
Emily Weisberg
Laurette Cano
Kelsey Olson
Armond Aghakhanian (arrived during Closed Session)

Also present were Oscar Macias, Interim Superintendent; Peter Knapik, Assistant Superintendent, Educational Services and Jason Hasty, Interim Assistant Superintendent, Business Services.

1) CALL TO ORDER

1.a) NOTICE TO THE PUBLIC

2) REQUESTS TO ADDRESS THE BOARD

2.a) Public Communications on Closed Session Agenda Items (In-Person Only)

2.b) Staff Responses

2.c) Board Members' Responses

3) CLOSED SESSION

3.a) Conference with Labor Negotiator, Pursuant to Government Code §54957.6

Agency Negotiator: Jason Hasty Employee Organizations: Burbank Teachers Association (BTA) & California School Employees Association (CSEA)

3.b) Public Employee Discipline/Dismissal/Release Pursuant to Government Code §54957

4) RECONVENE IN PUBLIC SESSION/PLEDGE OF ALLEGIANCE/LAND ACKNOWLEDGEMENT

President Pontzer Kamkar invited Kirsten Morris to lead in the Pledge of Allegiance.

5) REPORTING ON CLOSED SESSION

No items to report on Closed Session.

6) ADJUSTMENTS TO THE AGENDA

Vice President Weisberg would like to move 12b to after 12e, so Resolutions can be together.

7) ITEMS FOR FUTURE AGENDAS

Member Olson would like to start the process of beginning a committee on technology and AI.

Member Aghakhanian would like to revisit the conversation about creating a center for entrepreneurship and innovation.

Vice President Weisberg would like a Tech Audit report back. How it's being used, the cost and utilization. Also, requested a GATE report.

Member Olson added to Vice President Weisberg's request to have the process for identifying students included in the GATE report.

8) PRESENTATIONS / RECOGNITIONS

9) REPORTS FROM THE BOARD AND STAFF

9.a) Student Representatives

Natalie Garibyan, Burbank High School; Haily Hoang, John Burroughs High School; and Hayk Smbatyan, Monterey High School, will report on activities at their respective schools.

Hayk Smbatyan from Monterey High School was absent.

9.b) Burbank Teacher's Association (BTA), California School Employees Association (CSEA), Burbank Association of School Administrators (BASA)

Sarah Schwartz; BTA President, Laura Bauman, CSEA President, and Laura Flosi, BASA President will report on association business.

Nicole Drabecki, Burbank Teachers Association Vice President and PE teacher at Huerta, spoke regarding item 13m. She asked for ways to bring these interpreters from in house and hire BUSD employees.

9.c) Reports from the Superintendent

Oscar Macias, Interim Superintendent, will report on items of interest to the Board of Education and the community.

Interim Superintendent Macias gave an update to the community regarding the 2nd interim's positive certification. He addressed they will present the Athletic trainers job descriptions at a future Board meeting. Mentioned that regarding the use of technology, they will be forming a working group internally. Thanked council PTA for last night's Honorary Service Awards Banquet.

He introduced the Burbank Arts and Education Foundation who approached podium and presented.

Member Aghakhanian thanked all the members of the Burbank Arts and Education Foundation for all their hard work.

Vice President Weisberg shared her great experience scooping ice cream and connecting with community members. She thanked BAEF for all their work.

Member Olson also shared her experience and stated it was an honor scooping ice cream alongside students.

President Pontzer Kamkar thanked BAEF for all they do for Burbank Unified.

10) REQUESTS TO ADDRESS THE BOARD

10.a) Public Communications on Agenda Items and on Any Subject Within the Jurisdiction of the School Board

Jim Festante, BUSD parent and Media literacy educator, spoke on students having tech devices but do not have the instruction on operation. He proposed Media literacy in our curriculum and suggested a pilot program for the 26-27 school year.

Elizabeth Isabella, PTSA President at Burbank High, spoke regarding the need for a concession stand at BHS. She referenced equity and liability. She compared the two High Schools and the need for Burbank High to have the same opportunity to have a concession stand and make money as John Burroughs High School has. She invited the board to volunteer at the concession stands.

Barry Sarna, a 37 year Burbank resident, spoke regarding classroom management and student behavior. Stated that the Principal at John Muir, Dr. Miller, visits the first few minutes of the classes that have substitutes to explain good behavior. He commended Dr. Miller and his team for being proactive in addressing disruptive behavior.

Kathy Wills, a 30 year Burbank Teacher and resident, spoke on behalf of other teachers, and stated that many are exhausted to come. Mentioned that teachers in Burbank did not get raises but other Districts did. She addressed voting on the cuts and asked the Board to get creative on solutions.

Jennifer Lorigo, Chair at the Burbank Arts and Education Foundation, thanked Dr. Macias for his support with BAEF. She welcomed the new Superintendent, Dr. Tom McCoy, and looks forward in building a strong relationship.

Kirsten Morris, President of the Burbank Council PTA, praised Dr. Macias for his commitment to the community and to the students of Burbank Unified. She also praised the Bridge newsletter that prioritizes students and leads with heart.

Magali Huerta, BUSD employee and parent, spoke in regards to campus supervisors, a group of employees who are essential to the safety of our students. She asked the Board to recognize campus and yard supervisors with a dedicated appreciation day.

Sheryl, Burbank Unified parent, spoke regarding a District wide change for how Chromebooks are used. Stated that chrome books are distracting students. She would like screen time limits and a return to pen and paper.

Chandra Collins, BUSD teacher, spoke regarding reducing the use of Chromebooks. Stated that many teachers rely on online teaching and screen time negatively effects learning.
She mentioned Agenda item 13m and her concern with the rise in cost.

10.b) Superintendent's Comments

Oscar Macias, Interim Superintendent, will respond to public comment.

Interim Superintendent Macias spoke regarding technology and will work on Chromebook audits and getting feedback from our partners. He thanked Mr. Sarna for sharing best practices, and to Ms. Huerta, he shared how he started his career as a campus supervisor and he supports the work of the campus and yard supervisors. He thanked the BAEF and PTA for the space to communicate and connect with the community. He mentioned his time with our new Superintendent Dr. McCoy, and shared his excitement with the heart and level of experience he brings to our community.

10.c) Board Members' Responses

Board Members will respond to public comment.

President Pontzer Kamkar mentioned this was a productive Public Comments session filled with ideas to help improve our schools. Thanked the speakers for coming and sharing. Regarding he Alpha Interpreting contract, she stated it was brought back from the last meeting.

Vice President Weisberg, thanked Mr. Festante and mentioned she will volunteer at the BHS concession. She stated they need a clear set of priorities and timelines with the Bond projects. Thanked all speakers for coming and sharing valid concerns. She thanked the PTSA and BAEF partners.

Member Olson thanked all the speakers. Shared her exciting on being leaders in technology literacy and is looking forward to the next steps.

Clerk Cano thanked all speakers as well as the PTSA and BAEF. Addressed intentional use of technology and the need to set standards.

Member Aghakhanian shared that studies show technology is not preparing our students for the competitive market and there needs to be a balance. He thanked Ms. Huerta for sharing and recognizing the yard and campus supervisors.

11) REPORTS TO THE BOARD

11.a) Measure ABC Bond Program Update

Jason Hasty, Interim Assistant Superintendent of Business Services, will present the Measure ABC Bond Program Update to the Board of Education, as presented.

Measure ABC Bond Program Update 041626.pdf (OF 31,379)

12) NEW AND/OR UNFINISHED BUSINESS

12.a) Adoption of Resolution 36 proclaiming the month of April 2026 as the Burbank Unified School Districts Arab American Heritage Month

Oscar Macias, Interim Superintendent, recommends that the Board of Education adopt Resolution 36 proclaiming the month of April 2026, as the Burbank Unified School Districts Arab American Heritage Month, as presented.

Arab American Heritage 2026.pdf (OF 31,380)

It was moved by Emily Weisberg, and seconded by Armond Aghakhanian, that the Board of Education approve the item as recommended. The motion carried unanimously.

12.b) Adoption of Resolution 37 Proclaiming May 17, 2026 through May 23, 2026 as Classified Employee Week

Human Resources Services, recommends that the Board of Education adopt Resolution 37 Proclaiming May 17, 2026 through May 23, 2026 as Classified Employee Week, as presented.

Adoption of Resolution 37 Proclaiming May 17, 2026 through May 23, 2026 as Classified Employee Week.pdf (OF 31,381)

It was moved by Emily Weisberg, and seconded by Armond Aghakhanian, that the Board of Education approve the item as recommended. The motion carried unanimously.

12.c) Approval of Resolution 38 – Authorizing Use of Object 8625 RDA Pass-Throughs to Reimburse General Fund for Portion of Past and/or Current Annual 3% Deposits into Restricted Maintenance Account (RMA)

Administrative Services recommends that the Board of Education adopt Resolution 38 – Authorizing Use of Object 8625 RDA Pass-Throughs to Reimburse General Fund for Portion of Past and/or Current Annual 3% Deposits into Restricted Maintenance Account (RMA), and authorize the Superintendent or designee to execute the resolution and any related documents necessary to complete this action pursuant to BUSD-AR 3314, as presented.

Resolution 38 - RMA Funding 041626.pdf (OF 31,383)

It was moved by Armond Aghakhanian, and seconded by Kelsey Olson, that the Board of Education approve the item as recommended. The motion carried unanimously.

12.d) Approval of Resolution 39 – Regarding Geographic Usage Restrictions for RDA Pass-Throughs to District per AB 1290

Administrative Services recommends that the Board of Education adopt Resolution 39 – Regarding Geographic Usage Restrictions for RDA Pass-Throughs to District per AB 1290, and authorize the Superintendent or designee to execute the resolution and any related documents necessary to complete this action pursuant to BUSD-AR 3314, as presented

Resolution 39 - RDA Pass-Through Compliance 041626.pdf (OF 31,384)

It was moved by Armond Aghakhanian, and seconded by Kelsey Olson, that the Board of Education approve the item as recommended. The motion carried unanimously.

12.e) Adoption of Resolution 40 Proclaiming April 16, 2026, as School Librarian Day

Dr. Oscar Macias, Interim Superintendent, Instructional, recommends that the Board of Education adopt Resolution 40 Proclaiming April 16, 2026, as the Burbank Unified School District's School Librarian Day, as presented.

School Librarian Day 2026.pdf (OF 31,382)

It was moved by Emily Weisberg, and seconded by Armond Aghakhanian, that the Board of Education approve the item as recommended. The motion carried unanimously.

12.f) Approval of Professional Services Agreement, Mollenhauer Group, Girls Softball Field and Parking Improvements, Land Surveying Services, John Burroughs High School (Measure ABC Bond Fund)

The Administrative Services Department recommends that the Board of Education approve a professional services agreement between Burbank Unified School District and Mollenhauer Group for the Land Surveying Services for the Girls Softball Field and Parking Improvements at John Burroughs High School, effective April 17, 2026 through April 16, 2027, not to exceed $58,800.00 (21.0-00000-0-91008-85000-6282-432-0000) Measure ABC Bond Fund, and that authority to sign the agreement be exercised pursuant to BUSD-AR3314, as presented.

Mollenhauer_JBHS_Softball_Bond.pdf (OF 31,385)

It was moved by Armond Aghakhanian, and seconded by Kelsey Olson, that the Board of Education approve the item as recommended. The motion carried unanimously.

12.g) Approval of Amended Contract for QuaverEd Software

Peter Knapik, Assistant Superintendent of Educational Services, recommends that the Board of Education approve the amended contract with QuaverEd, music composition software for students in Kindergarten through Grade 5, funded for a total amount not to exceed $22,800, effective May 1, 2026 through May 1, 2028, and that authority to sign the agreement be exercised pursuant to BUSD AR 3314, as presented.

Approval of Amended Contract with QuaverEd. 04.16.26..pdf (OF 31,386)

It was moved by Armond Aghakhanian, and seconded by Kelsey Olson, that the Board of Education approve the item as recommended. The motion carried unanimously.

12.h) Approval of Agreement with YMCA of Metropolitan Los Angeles Burbank for Expanded Learning Programs

Peter Knapik, Assistant Superintendent, Educational Services, recommends that the Board of Education approve the Agreement between the Burbank Unified School District YMCA of Metropolitan Los Angeles -Burbank to provide services for the 2025-2026 Expanded Learning Programs, not to exceed $235,521 (01.0-26000.0-11100-10012-5810-5480000 from the fiscal year 2024-2025) effective April 17, 2026 through July 31, 2026, and that authority to sign this agreement be exercised pursuant to BUSD-AR 3314, as presented.

YMCA ELOP Agreement 4 16 26.pdf (OF 31,387)

It was moved by Armond Aghakhanian, and seconded by Emily Weisberg, that the Board of Education approve the item as recommended. The motion carried unanimously.

12.i) Approval of Revised Job Description, Assistant Superintendent, Human Resources

Oscar Macias, Interim Superintendent, recommends that the Board of Education approve proposed changes to the job description for the position of Assistant Superintendent, Human Resources effective 4/17/26, as presented.

Approval of Revised Job Description Asst Supt HR 041626.pdf AMENDED (OF 31,388)

It was moved by Armond Aghakhanian, and seconded by Kelsey Olson, that the Board of Education approve the item as recommended. The motion carried unanimously.

12.j) Approval of Boys and Girls Club Agreement for Child Care Paid by Expanded Learning Opportunities Program from July 1, 2026 through June 30, 2027

Peter Knapik, Assistant Superintendent, Educational Services, recommends that the Board of Education approve the Agreement between the Burbank Unified School District Boys and Girls Club of Burbank to provide childcare services at a 100% rate reduction paid by the Expanded Learning Opportunities Program (ELOP), not to exceed $1,900,000.00 (01.0-2600.0-0-00000-27000-5810-7429000), effective July 1, 2026 through June 30, 2027, and that authority to sign this agreement be exercised pursuant to BUSD –AR 3314, as presented.

Agreement with BGCB for ELOP Funding Child Care 2026-27 4 16 26.pdf (OF 31,389)

It was moved by Kelsey Olson, and seconded by Laurette Cano, that the Board of Education approve the item as recommended. The motion carried unanimously.

12.k) Second Reading and Approval of Revised Board Policy and Administrative Regulation 6146.1 High School Graduation Requirements

Peter Knapik, Assistant Superintendent of Educational Services, will facilitate the Boards second reading and approval of the proposed revision to Board Policy and Administrative Regulation 6146.1 High School Graduation Requirements, as presented

Second Reading of BP and AR 6146.pdf (OF 31,390)

It was moved by Emily Weisberg, and seconded by Armond Aghakhanian, that the Board of Education approve the item as recommended. The motion carried unanimously.

12.l) Acceptance of Gifts

Oscar Macias, Interim Superintendent, recommends that the Board of Education take formal action accepting the following gifts to the District, and that the Board President convey appreciation to the donors, as presented.

Gift Report 041626.pdf (OF 31,391)

It was moved by Armond Aghakhanian, and seconded by Kelsey Olson, that the Board of Education approve the item as recommended. The motion carried unanimously.

13) CONSENT AGENDA

13.a) Approval of Minutes

Minutes 3.5.26 UNOFFICIAL AM_Amended.pdf AMENDED (OF 31,392)

13.b) Approval of Minutes

Minutes 3.26.26 UNOFFICIAL AM.pdf AMENDED (OF 31,393)

13.c) Approval of the 2025-2026 Purchase Order Report

Administrative Services recommends that the Board of Education approve purchase orders for 2025-2026 as listed through March 23, 2026, as presented.

2025-2026 PURCHASE ORDER REPORT.pdf (OF 31,394)

13.d) Warrants Report - March 1, 2026 through March 31, 2026

For informational purposes, Administrative Services submits to the Board of Education the Warrants Report in the total amount of $7,284,687.92, for warrants issued March 1, 2026 through March 31, 2026, as presented.

Warrants Report - March 1, 2026 - March 31, 2026.pdf (OF 31,395)

13.e) Miscellaneous Receipts Report - March, 2026

For informational purposes, Administrative Services submits to the Board of Education the Miscellaneous Receipts Report in the total amount of $5,524,755.59, for receipts from March 1, 2026 through March 31, 2026, as presented.

Miscellaneous Receipts Report - March 2026.pdf (OF 31,396)

13.f) Amendment of Personnel Report 25-26-15

Human Resources Services recommends that the Board of Education amend the Personnel Report number 25-26-15 covering Certificated and Classified personnel, and consisting of Pages 1 to 11, as presented.

Amended-Personnel Report 25-26-15.pdf (OF 31,397)

13.g) Approval of Personnel Report 25-26-18

Human Resources Services recommends that the Board of Education approve Personnel Report number 25-26-18, covering Certificated and Classified personnel, and consisting of Pages 1 to 5 inclusive, as presented.

Personnel Report 25-26-18.pdf (OF 31,398)

13.h) Approval of Williams Settlement Quarterly Report on Uniform Complaints 2025-2026

Peter Knapik, Assistant Superintendent, recommends that the Board of Education approve the Williams Lawsuit Settlement Quarterly Report on Uniform Complaints 2025-2026, Report Summary No. 3, January 1, 2026 through March 31, 2026, as presented.

Williams 4 1 26.pdf (OF 31,399)

13.i) Approval of Instructional Consultant Services

Peter Knapik, Assistant Superintendent of Educational Services, recommends that the Board of Education approve the instructional consultant services for on-site student learning support and staff development and exercise authority to sign the agreements pursuant to BUSD-AR 3314, as presented.

Approval of Instructional Consultant 041626.pdf (OF 31,400)

13.j) Approval of Memorandum of Understanding (MOU) between Burbank Unified School District (Burbank Adult School) and 986 Pharmacy

Peter Knapik, Assistant Superintendent of Educational Services, recommends that the Board of Education approve the Memorandum of Understanding (MOU) between Burbank Unified School District (Burbank Adult School) and 986 Pharmacy, as presented.

BAS 986 Pharmacy 4 16 26.pdf (OF 31,401)

13.k) Approval of Amended Agreement for Ericka Bootchk

Peter Knapik, Assistant Superintendent of Educational Services, recommends that the Board of Education approve the amended consultant agreement between Burbank Unified School District and Erika Bootchk to extend the end date of the project, effective March 1, 2025 through May 31, 2026 in the amount of $9000 for on-site student learning support and staff development and exercise authority to sign the agreements pursuant to BUSD-AR 3314, as presented.

Approval of Amended Agreement 041626.pdf (OF 31,402)

13.l) Ratification of Memorandum of Understanding (MOU) between Burbank Unified School District-Burbank Adult School and Kay Dermatology

Peter Knapik, Assistant Superintendent of Educational Services recommends that the Board of Education ratify Memorandum of Understanding (MOU) between Burbank Unified School District-Burbank Adult School and Kay Dermatology as presented

BAS KayDermatology Agreement 4 16 26.pdf (OF 31,403)

13.m) Approval of Amended Agreement for Professional Services Provided by Alpha Interpreting Agency, Corp. for Special Education Students

Peter Knapik, Assistant Superintendent of Educational Services, recommends that the Board of Education amend an agreement between Burbank Unified School District and Alpha Interpreting Agency, Corp., to provide interpreters/translators for deaf and hard of hearing Special Education students, not to exceed $2,075,000 (01.0-65000.0-57602-11900-5850-7440000), effective July 1, 2025 through June 30, 2026 and that authority to sign the agreement be exercised pursuant to BUSD-AR 3314, as presented. Note: The original approval date was June 18, 2025, for a total not to exceed $700,000. A second amendment was approved on December 11, 2025, to add $500,000. Due to increased need, this amendment adds an additional $875,000 for a new not to exceed amount of $2,075,000.

SPED_Professional_Services_Alpha_Interpreting_Amendment.pdf (OF 31,404)

Approve items 13c through 13j, as presented.
Motion by Vice President Weisberg and seconded by Member Olson.
Motion passed unanimously, 5-0.

Approve item 13a, as amended.
Motion by Clerk Cano and seconded by Member Olson.
Motion passed unanimously, 5-0.

Approve item 13b, as amended.
Motion by Clerk Cano and seconded by Vice President Weisberg.
Motion passed unanimously, 5-0.

Approve items 13k, as presented.
Motion by Member Aghakhanian and seconded by Member Olson.
Motion passed unanimously, 5-0.

Approve items 13l, as presented.
Motion by Member Aghakhanian and seconded by Member Olson.
Motion passed unanimously, 5-0.

Approve items 13m, as presented.
Motion by Member Olson and seconded by Member Aghakhanian.
Motion passed unanimously, 5-0.

14) REPORTS FROM BOARD MEMBERS

14.a) Reports from Board Members

Board of Education members will report on items within the jurisdiction of the Board.

No reports from Board Members.

15) ADJOURNMENT

Meeting adjourned at 10:07 p.m.

MINUTES APPROVED:

_____
OSCAR MACIAS, INTERIM SUPERINTENDENT
SECRETARY OF THE BOARD

___May 7, 2026_____
DATE

_____
LAURETTE CANO, CLERK

BURBANK UNIFIED SCHOOL DISTRICT

BOARD DETAIL REPORT

Printed between 03/24/2026 & 04/13/2026

PO Number	Vendor	Description	Site	Fund	Total Amount
25002346	HART DESIGN BUILD, INC.	C/O 6 : INCREASE BY $21,110.12 (BOARD APPROVED 3/5/26); CARRYOVER PO; 2425-003; AQUATIC CENTER MODERNIZATION AT BURBANK HIGH; COMMUNITY REDEVELOPMENT FUNDS; BOARD APPROVED 11/21/24	FACILITIES SERVICES	400	$2,321,280.61
26000055	AMAZON CAPITAL SERVICES	C/O 2: INCREASE BY $6,000.00; 2025-26 BLANKET ORDER; CLASSROOM AND OFFICE SUPPLIES	EDISON ELEMENTARY	010	$12,000.00
26000063	SOUTHWEST SCHOOL & OFFICE SUPPLY	C/O 1: INCREASE BY $1,500.00; 2025-26 BLANKET ORDER; CLASSROOM AND OFFICE SUPPLIES	DISNEY ELEMENTARY	010	$3,500.00
26000111	SOUTHWEST SCHOOL & OFFICE SUPPLY	C/O 2: INCREASE BY $1,000.00; 2025-26 BLANKET ORDER; CLASSROOM AND OFFICE SUPPLIES	EMERSON ELEMENTARY	010	$6,000.00
26000249	AMAZON CAPITAL SERVICES	C/O : INCREASE BY $2,500.00; 2025-26 BLANKET ORDER; CLASSROOM AND OFFICE SUPPLIES	WASHINGTON ELEMENTARY	010	$5,000.00
26000279	P & R PAPER SUPPLY COMPANY	C/O 1: INCREASE BY $32,000.00; 2025-26 BLANKET ORDER; CAFETERIA SUPPLIES AND PAPER GOODS; CHILD NUTRITION SCHOOL PROGRAM FUNDS	FOOD SERVICES	130	$212,000.00
26000305	OFFICE DEPOT/ BUSINESS SERVICES DIVISION	C/O 1: INCREASE BY $1,500.00; 2025-26 BLANKET ORDER; OFFICE SUPPLIES	DISNEY ELEMENTARY	010	$3,500.00
26000331	FELLERS INC	C/O 2: REDUCE BY $100.00; 2025-26 BLANKET ORDER; PRINT CENTER SUPPLIES; DISTRICT PRINT SHOP FUNDS	WAREHOUSE	010	$6,900.00
26000392	VONK, RICK	C/O 1: INCREASE BY $2,213.98; 2025-26 BLANKET; RETIREE MEDICAL REIMBURSEMENT	FISCAL SERVICES	670	$11,758.98
26000407	AMAZON CAPITAL SERVICES	C/O 2: INCREASE BY $10,000.00; 2025-26 BLANKET ORDER; SUPPLIES AND MATERIALS; CHILD NUTRITION SCHOOL PROGRAM FUNDS	FOOD SERVICES	130	$30,000.00
26000430	FRONTLINE TECHNOLOGIES	C/O 1: INCREASE BY $3,500.00; ANNUAL SUBSCRIPTION; ABSENCE & SUBSTITUTE MANAGEMENT SERVICES; BOARD APPROVED 6/18/25 & 3/26/26	PERSONNEL SERVICES	010	$37,708.36
26000454	ULINE - Attn: ACCOUNTS RECEIVABLES	C/O 1: INCREASE BY $100.00; 2025-26 BLANKET ORDER; OFFICE SUPPLIES	WAREHOUSE	010	$6,100.00
26000483	SOUTHWEST SCHOOL & OFFICE SUPPLY	C/O 1: REDUCE BY $240.98; 2025-26 BLANKET ORDER; CLASSROOM AND OFFICE SUPPLIES	WASHINGTON CHILDREN´S CENTER	120	$1,009.02
26000642	AMAZON CAPITAL SERVICES	C/O 3: INCREASE BY $1,000.00; 2025-26 BLANKET ORDER; CLASSROOM AND OFFICE SUPPLIES	EMERSON ELEMENTARY	010	$7,000.00
26000728	SIGN UP INTERPRETING SERVICES, LLC	C/O 2: INCREASE BY $30,000.00; CONSULTANT AGREEMENT; INTERPRETING SERVICES; BOARD APPROVED 7/24/25	PERSONNEL SERVICES	010	$150,000.00

BOARD DETAIL REPORT

Printed between 03/24/2026 & 04/13/2026

PO Number	Vendor	Description	Site	Fund	Total Amount
26001151	AMAZON CAPITAL SERVICES	C/O 1: INCREASE BY $2,000.00; 2025-26 BLANKET ORDER; CLASSROOM AND OFFICE SUPPLIES; TITLE I FUNDS	DISNEY ELEMENTARY	010	$3,000.00
26001190	AMAZON CAPITAL SERVICES	C/O 3: INCREASE BY $500.00; 2025-26 BLANKET ORDER; CLASSROOM AND OFFICE SUPPLIES	EMERSON ELEMENTARY	010	$4,500.00
26001222	AMAZON CAPITAL SERVICES	C/O 1: INCREASE BY $1,000.00; 2025-26 BLANKET ORDER; CLASSROOM AND OFFICE SUPPLIES	DISNEY ELEMENTARY	010	$1,300.00
26001314	AMAZON CAPITAL SERVICES	C/O 2: INCREASE BY $2,670.00; 2025-26 BLANKET ORDER; CLASSROOM AND OFFICE SUPPLIES	LUTHER BURBANK MIDDLE SCHOOL	010	$9,170.00
26001359	AMAZON CAPITAL SERVICES	C/O 3: INCREASE BY $2,000.00; 2025-26 BLANKET ORDER; CLASSROOM AND OFFICE SUPPLIES; FRC ELEMENTARY FUNDS	JEFFERSON ELEMENTARY	010	$12,200.00
26001401	AMAZON CAPITAL SERVICES	C/O 2: INCREASE BY $300.00; 2025-26 BLANKET ORDER; BOOKS; TITLE I FUNDS	WASHINGTON ELEMENTARY	010	$1,112.00
26001422	CLASS LEASING LLC	C/O 1; INCREASE BY $2,612.00; BOARD APPROVED 3/5/26; 2526-009 RELOCATABLE CLASSROOMS FOR BAS; ADULT EDUCATION-BLOCK GRANT FUNDS; BOARD APPROVED 10/9/25	FACILITIES SERVICES	110	$250,642.00
26001453	JPMORGAN CHASE BANK	C/O 1: INCREASE BY $5,000.00; BLANKET ORDER FOR P-CARD PURCHASES; SELF-SUPP CHILDCARE FUNDS	CHILD DEVELOPMENT SERVICES	120	$20,000.00
26001475	AMAZON CAPITAL SERVICES	C/O 2: INCREASE BY $1,000.00; 2025-26 BLANKET ORDER; FRC ELEMENTARY FUNDS	EMERSON ELEMENTARY	010	$4,000.00
26001575	FLEWELLING & MOODY INC	C/O 4: INCREASE BY $29,628.00; BOARD APPROVED 3/826/26; CARRYOVER PO 25000787; PROFESSIONAL SERVICES; ARCHITEC,TURAL DESIGN FOR AQUATICS CENTER MODERNIZATION	FACILITIES SERVICES	400	$118,908.57
26001662	AMAZON CAPITAL SERVICES	C/O 2: INCREASE BY $2,500.00; 2025-26 BLANKET ORDER; CLASSROOM AND OFFICE SUPPLIES; TITLE I FUNDS	WASHINGTON ELEMENTARY	010	$5,000.00
26001778	AMAZON CAPITAL SERVICES	C/O 1: INCREASE BY $1,000.00; 2025-26 BLANKET ORDER; CLASSROOM AND OFFICE SUPPLIES; TITLE III - LEP FUNDS	JEFFERSON ELEMENTARY	010	$2,500.00
26001798	MB DANCE INC	C/O 1: INCREASE BY $18,784.00; CONSULTANT AGREEMENT; DANCE INSTRUCTION; ELOP FUNDS; BOARD APPROVED 7/24/25	CHILD DEVELOPMENT SERVICES	010	$27,000.00
26001899	J.W. PEPPER & SONS, INC	C/O 1: INCREASE BY $26.00; CLASSROOM SUPPLIES	JOHN BURROUGHS HIGH SCHOOL	010	$526.00
26001936	AMAZON CAPITAL SERVICES	C/O 3: INCREASE BY $2000.00; 2025-26 BLANKET ORDER; CLASSROOM AND OFFICE SUPPLIES; ELOP FUNDS	CHILD DEVELOPMENT SERVICES	010	$3,900.00

BOARD DETAIL REPORT

Printed between 03/24/2026 & 04/13/2026

PO Number	Vendor	Description	Site	Fund	Total Amount
26002074	AMAZON CAPITAL SERVICES	C/O 1: INCREASE BY $1,000.00; 2025-26 BLANKET ORDER; CLASSROOM AND OFFICE SUPPLIES; TITLE I FUNDS	DISNEY ELEMENTARY	010	$9,700.00
26002126	LINGUABEE LLC	C/O 1: INCREASE BY $1,000.00; CONSULTANT AGREEMENT; INTERPRETING SERVICES; BOARD APPROVED 1/15/26	PERSONNEL SERVICES	010	$3,000.00
26002169	AMAZON CAPITAL SERVICES	C/O 1: INCREASE BY $5,000.00; 2025-26 BLANKET ORDER; CLASSROOM AND OFFICE SUPPLIES; AMS FUNDS	LUTHER BURBANK MIDDLE SCHOOL	010	$6,000.00
26002170	AMAZON CAPITAL SERVICES	C/O 1: INCREASE BY $1,000.00; 2025-26 BLANKET ORDER; CLASSROOM AND OFFICE SUPPLIES; AMS FUNDS	WASHINGTON ELEMENTARY	010	$2,000.00
26002563	AMAZON CAPITAL SERVICES	C/O 1: INCREASE BY $150.00; 2025-26 BLANKET ORDER; CLASSROOM AND OFFICE SUPPLIES; SPECIAL EDUCATION FUNDS	EMERSON ELEMENTARY	010	$250.00
26002564	AMAZON CAPITAL SERVICES	C/O 1: REDUCE BY $102.00; 2025-26 BLANKET ORDER; CLASSROOM AND OFFICE SUPPLIES; SPECIAL EDUCATION FUNDS	JOHN BURROUGHS HIGH SCHOOL	010	$2,270.16
26002635	BOX CARS AND ONE-EYED JACKS, INC	C/O 1: INCREASE BY $ 148.84; CLASSROOM SUPPLIES; TITLE I FUNDS	DISNEY ELEMENTARY	010	$1,659.39
26002644	FOLLETT CONTENT SOLUTIONS LLC	C/O 1: REDUCE BY $ 32.23; BOOKS; FRC ELEMENTARY FUNDS	JEFFERSON ELEMENTARY	010	$4,063.41
26002705	CHUMASH INDIAN MUSEUM	FIELD TRIP ADMISSION; CHUMASH INDIAN MUSEUM; GIFT FUNDS	ROOSEVELT ELEMENTARY	010	$1,000.00
26002706	DISCOVERY SCIENCE CENTER OF ORANGE COUNTY	FIELD TRIP ADMISSION; DISCOVERY CUBE; GIFT FUNDS	ROOSEVELT ELEMENTARY	010	$1,649.00
26002707	SCHOOL ZONE TRANSPORTATION, INC	STUDENT TRANSPORTATION; TRAVEL TOWN; PTA FUNDS	STEVENSON ELEMENTARY	010	$772.50
26002708	TRANSIT SYSTEMS UNLIMITED, INC	STUDENT TRANSPORTATION; ATHLETICS	JOHN BURROUGHS HIGH SCHOOL	010	$1,473.00
26002709	MULTI - HEALTH SYSTEMS	TESTING MATERIALS	SPECIAL EDUCATION	010	$1,937.50
26002710	SCHOOL ZONE TRANSPORTATION, INC	STUDENT TRANSPORTATION; DISNEYLAND; ACCOUNTS RECEIVABLE	MUIR MIDDLE SCHOOL	010	$2,800.00
26002711	PREMIER LIGHTING & PROD CO	EVENT SUPPLIES; FRC ELEMENTARY FUNDS	JEFFERSON ELEMENTARY	010	$275.81
26002712	JPMORGAN CHASE BANK	2025-26 BLANKET ORDER; UBER AND LYFT CARDS FOR FACTS PROGRAM; SPED-IDEA MENTAL HEALTH PROGRAM FUNDS	SPECIAL EDUCATION	010	$1,800.00
26002713	UNDERWOOD FAMILY FARMS	FIELD TRIP ADMISSION; UNDERWOOD FAMILY FARMS; GIFT FUNDS	EDISON ELEMENTARY	010	$627.00
26002714	SITEONE LANDSCAPE SUPPLY, LLC	FACILITY REPAIR MATERIAL; ON-GOING AND MAJOR MAINTENANCE FUNDS	BURBANK HIGH SCHOOL	010	$2,306.88
26002715	SCHOLASTIC INC.	MAGAZINES; TITLE III IMMIGRANT EDUCATION FUNDS	STEVENSON ELEMENTARY	010	$206.25
26002716	BEACON SALES ACQUISITION, INC.	FACILITY REPAIR MATERIAL; ON-GOING AND MAJOR MAINTENANCE FUNDS.	VARIOUS SITES	010	$1,333.38

Printed between 03/24/2026 & 04/13/2026

PO Number	Vendor	Description	Site	Fund	Total Amount
26002717	TYERMAN'S AUTOMOTIVE	AUTOMOBILE REPAIR BY VENDOR; ON-GOING AND MAJOR MAINTENANCE FUNDS	FACILITIES SERVICES	010	$150.00
26002718	GLENDALE BUILDER'S SUPPLIES	FACILITY REPAIR MATERIAL; ON-GOING AND MAJOR MAINTENANCE FUNDS	HORACE MANN CHILDREN´S CENTER	010	$562.09
26002720	TRANE U.S. INC	FACILITY REPAIR BY VENDOR; ON-GOING AND MAJOR MAINTENANCE FUNDS	DISNEY ELEMENTARY	010	$1,042.49
26002721	WARD'S NATURAL SCIENCE	CLASSROOM SUPPLIES	EMERSON ELEMENTARY	010	$169.75
26002722	APPLE COMPUTER ED SALES	COMPUTER EQUIPMENT; MEDI-CAL FUNDS	SPECIAL EDUCATION	010	$9,720.40
26002723	AMAZON CAPITAL SERVICES	CLASSROOM SUPPLIES; SPECIAL EDUCATION FUNDS	PROVIDENCIA ELEMENTARY	010	$475.38
26002724	QUAVERED INC.	SOFTWARE LICENSE; MUSIC IS INSTRUMENTAL; BOARD APPROVED 3/26/26	INSTRUCTIONAL SERVICES	010	$12,600.00
26002725	AMAZON CAPITAL SERVICES	CLASSROOM SUPPLIES; TITLE III IMMIGRANT EDUCATION FUNDS	STEVENSON ELEMENTARY	010	$275.41
26002726	AMAZON CAPITAL SERVICES	CLASSROOM SUPPLIES; TITLE III - LEP STUDENT PROGRAM AND GENERAL FUNDS	STEVENSON ELEMENTARY	010	$932.85
26002727	GENESIS FLOOR COVERING, INC.	2526-018 CONCRETE SEALING AND CARPET REPLACEMENT AT ROOSEVELT AUDITORIUM; ON-GOING AND MAJOR MAINTENANCE FUNDS	ROOSEVELT ELEMENTARY	010	$19,035.00
26002728	ARROW RESTAURANT EQUIPMENT	KITCHEN EQUIPMENT; CHILD NUTRITION SCHOOL PROGRAM FUNDS	ROOSEVELT ELEMENTARY	130	$5,270.85
26002730	SWEETWATER SOUND INC	MUSICAL INSTRUMENTS; MUSIC IS INSTRUMENTAL FUNDS	MUIR MIDDLE SCHOOL	010	$7,884.18
26002731	SCHOOL ZONE TRANSPORTATION, INC	STUDENT TRANSPORTATION: CAYTON CHILDREN'S MUSEUM; PTA FUNDS	EMERSON ELEMENTARY	010	$820.50
26002732	AMAZON CAPITAL SERVICES	CO 1: INCREASE BY $399.97; CLASSROOM SUPPLIES; TITLE III IMMIGRANT EDUCATION FUNDS	STEVENSON ELEMENTARY	010	$459.83
26002733	AMAZON CAPITAL SERVICES	2025-26 BLANKET ORDER; CLASSROOM AND OFFICE SUPPLIES; CA - CALIF STATE GENERAL CC PROGRAM FUNDS	CHILD DEVELOPMENT SERVICES	120	$5,500.00
26002734	CAROLINA BIOLOGICAL SUPPLY CO	CLASSROOM SUPPLIES; FRC ELEMENTARY FUNDS	JEFFERSON ELEMENTARY	010	$640.70
26002735	SCHOLASTIC INC.	MAGAZINES; TITLE III IMMIGRANT EDUCATION FUNDS	STEVENSON ELEMENTARY	010	$240.63
26002736	APPLE COMPUTER ED SALES	COMPUTER EQUIPMENT; CTE-UNRESTRICTED FUNDS AND CHUCK LORRE FAMILY GRANT	DOLORES HUERTA MIDDLE SCHOOL	010	$3,120.73
26002737	JOHNSON, JILL	REIMBURSEMENT TO PRINCIPAL FOR STUDENT AWARDS; GIFT FUNDS	STEVENSON ELEMENTARY	010	$133.38
26002738	TMK HAWK PARENT, CORP	CLASSROOM EQUIPMENT; PERKINS GRANT	BURBANK HIGH SCHOOL	010	$4,617.54
26002739	BARNES AND NOBLE INC	BOOKS	LUTHER BURBANK MIDDLE SCHOOL	010	$2,418.10
26002740	FAST DEER BUS CHARTER INC	STUDENT TRANSPORTATION; ATHLETICS	JOHN BURROUGHS HIGH SCHOOL	010	$2,040.00

Printed between 03/24/2026 & 04/13/2026

PO Number	Vendor	Description	Site	Fund	Total Amount
26002741	FUN EXPRESS LLC	CLASSROOM SUPPLIES; FRC ELEMENTARY FUNDS	JEFFERSON ELEMENTARY	010	$119.23
26002742	OFFICE DEPOT/ BUSINESS SERVICES DIVISION	FURNITURE; ADULT EDUCATION - BLOCK GRANT	BURBANK HIGH SCHOOL	110	$687.20
26002743	AMAZON CAPITAL SERVICES	CLASSROOM SUPPLIES; TITLE III - LEP STUDENT PROGRAM FUNDS	STEVENSON ELEMENTARY	010	$124.40
26002744	BERTOLE, GIANNA	REIMBURSEMENT TO TEACHER FOR CLASSROOM SUPPLIES; FRC ELEMENTARY FUNDS	EDISON ELEMENTARY	010	$150.00
26002745	WINSBORO, NICOLE	REIMBURSEMENT TO TEACHER FOR CLASSROOM SUPPLIES; FRC ELEMENTARY FUNDS	EDISON ELEMENTARY	010	$150.00
26002746	JPMORGAN CHASE BANK	STUDENT AWARDS	BRET HARTE ELEMENTARY	010	$55.02
26002747	MAGIC JUMP RENTALS, INC.	RENTAL EQUIPMENT FOR EVENT; FRC ELEMENTARY FUNDS	STEVENSON ELEMENTARY	010	$590.30
26002748	RUSSELL SIGLER INC	HVAC EQUIPMENT; BOND FUNDS; BOARD APPROVED 3/5/26	BURBANK HIGH SCHOOL	210	$21,216.00
26002749	PJHM ARCHITECTS, INC.	PROFESSIONAL SERVICES AGREEMENT; ARCHITECTURAL SERVICES; BOND FUND; BOARD APPROVED 3/5/26	EDISON ELEMENTARY	210	$287,669.29
26002750	BUDLONG AND ASSOCIATES, INC.	PROFESSIONAL SERVICES; DISTRICT-WIDE HVAC ASSESSMENT; BOND FUNDS; BOARD APPROVED 3/5/26	FACILITIES SERVICES	210	$265,000.00
26002751	AMS.NET, LLC	SERVER STORAGE BACKUP SYSTEM; BOARD APPROVED 3/26/26	TECHNOLOGY SERVICES	010	$55,403.74
26002752	NATIONAL ASSOCIATION OF ELEMENTARY SCHOOL PRINCIPA	STUDENT AWARDS	EDISON ELEMENTARY	010	$130.50
26002753	NATIONAL ASSOCIATION OF ELEMENTARY SCHOOL PRINCIPA	STUDENT AWARDS	JEFFERSON ELEMENTARY	010	$443.42
26002754	B & H FOTO & ELECTRONICS CORP	AUDIO VISUAL EQUIPMENT; ADULT EDUCATION-BLOCK GRANT	BURBANK ADULT SCHOOL	110	$11,118.49
26002755	JPMORGAN CHASE BANK	CONFERENCE FEES; CTE FUNDS	JOHN BURROUGHS HIGH SCHOOL	010	$1,840.00
26002756	COZZINI BROS, INC.	KITCHEN KNIFE SHARPENING SERVICE; CHILD NUTRITION SCHOOL PROGRAM FUNDS	VARIOUS SITES	130	$2,100.00
26002757	RUDCHENKO, SARAH	2025-26 RETIREE MEDICAL REIMBURSEMENT	FISCAL SERVICES	670	$2,347.00
26002758	LAKESHORE CURRICULUM MATERIAL	CLASSROOM SUPPLIES; TITLE III - LEP STUDENT PROGRAM FUNDS	JEFFERSON ELEMENTARY	010	$51.92
26002759	LAKESHORE CURRICULUM MATERIAL	CLASSROOM SUPPLIES; CHILD DEVELOPMENT FUNDS	WASHINGTON CHILDREN´S CENTER	120	$289.79
26002760	PREMIER LIGHTING & PROD CO	EVENT RENTALS; FRC ELEMENTARY FUNDS	JEFFERSON ELEMENTARY	010	$201.09
26002761	INFINITY BACKFLOW & PLUMBING SERVICE	FACILITY REPAIR BY VENDOR; ON-GOING AND MAJOR MAINTENANCE FUNDS	DOLORES HUERTA MIDDLE SCHOOL	010	$275.00

Printed between 03/24/2026 & 04/13/2026

PO Number	Vendor	Description	Site	Fund	Total Amount
26002762	SCHOOL ZONE TRANSPORTATION, INC	STUDENT TRANSPORTATION; IGLOO MUSIC RECORDING STUDIOS; GIFT FUNDS	ROOSEVELT ELEMENTARY	010	$750.00
26002763	SOUTHWEST SCHOOL & OFFICE SUPPLY	CLASSROOM EQUIPMENT; CHILD DEVELOPMENT FUNDS	WASHINGTON CHILDREN´S CENTER	120	$220.99
26002764	SCHOOL ZONE TRANSPORTATION, INC	STUDENT TRANSPORTATION; CHUMASH INDIAN MUSEUM; GIFT FUNDS	ROOSEVELT ELEMENTARY	010	$915.00
26002765	SCHOOL ZONE TRANSPORTATION, INC	STUDENT TRANSPORTATION; CHUMASH INDIAN MUSEUM; GIFT FUNDS	ROOSEVELT ELEMENTARY	010	$915.00
26002766	SCHOOL ZONE TRANSPORTATION, INC	STUDENT TRANSPORTATION; LOS ANGELES ZOO; PTA FUNDS	EMERSON ELEMENTARY	010	$1,500.00
26002767	LIU, YUANZHEN	INSTRUMENT REPAIR; FRC ELEMENTARY FUNDS	JEFFERSON ELEMENTARY	010	$150.00
26002769	AMAZON CAPITAL SERVICES	CLASSROOM SUPPLIES; TITLE III IMMIGRANT EDUCATION FUNDS	STEVENSON ELEMENTARY	010	$248.13
26002770	AMAZON CAPITAL SERVICES	AUDIO EQUIPMENT	EDISON ELEMENTARY	010	$1,159.15
26002771	AMAZON CAPITAL SERVICES	OFFICE SUPPLIES	SUPERINTENDENT ´S OFFICE	010	$26.79
26002772	AREY JONES EDUCATIONAL SOLUTIONS	COMPUTER EQUIPMENT; TITLE I FUNDS	MUIR MIDDLE SCHOOL	010	$39,984.42
26002773	SCHOOL BUSINESS INC.	CONSULTANT AGREEMENT; PROFESSIONAL BUSINESS SERVICES; BOARD APPROVED 3/5/26	FISCAL SERVICES	010	$50,000.00
26002774	JPMORGAN CHASE BANK	CONFERENCE REGISTRATION	SUPERINTENDENT ´S OFFICE	010	$290.00
26002775	BASECAMP SUPPLY CO.	EVENT RENTAL SUPPPLIES; FRC ELEMENTARY FUNDS	STEVENSON ELEMENTARY	010	$481.78
26002776	KARAPETYAN, MARINE	REIMBURSEMENT TO PARAEDUCATOR FOR CLASSROOM SUPPLIES	EMERSON ELEMENTARY	010	$27.73
26002777	SODE SCHOOL OF PERFORMING ARTS	CONSULTANT AGREEMENT; DANCE INSTRUCTION; PTA AND AMS FUNDS; BOARD APPROVED 2/5/26	PROVIDENCIA ELEMENTARY	010	$7,537.50
26002778	STOCKTON, STEPHANIE	REIMBURSEMENT TO FRC TREASURER FOR REPAIR SUPPLIES; FRC FUNDS	JEFFERSON ELEMENTARY	010	$69.31
26002779	DISCOUNT SCHOOL SUPPLY	RUGS AND CLASSROOM SUPPLIES; CHILD DEVELOPMENT FUNDS	WASHINGTON CHILDREN´S CENTER	120	$710.71
26002780	JPMORGAN CHASE BANK	OFFICE EQUIPMENT; BAEF FUNDS	EDISON ELEMENTARY	010	$358.00
26002781	BECKER & MIYAMOTO, INC. LICENSED LAND SURVERYORS	PROFESSIONAL SERVICES; LAND SURVEY; BOND FUNDS; BOARD APPROVED 3/5/26	EDISON ELEMENTARY	210	$19,755.00
26002782	AMAZON CAPITAL SERVICES	2025-26 BLANKET ORDER; FRC ELEMENTARY FUNDS	MILLER ELEMENTARY	010	$2,150.00
26002783	DESIGNS BY KING	IMA SUPPLIES; GENERAL AND ACCOUNTS RECEIVABLE	JOHN BURROUGHS HIGH SCHOOL	010	$395.02
26002784	AMAZON CAPITAL SERVICES	BOOKS; TITLE III IMMIGRANT EDUCATION FUNDS	STEVENSON ELEMENTARY	010	$275.47
26002785	DICK BLICK CO	CLASSROOM SUPPLIES; AMS FUNDS	STEVENSON ELEMENTARY	010	$302.82

BOARD DETAIL REPORT

Printed between 03/24/2026 & 04/13/2026

PO Number	Vendor	Description	Site	Fund	Total Amount
26002786	OFFICE DEPOT/ BUSINESS SERVICES DIVISION	CLASSROOM SUPPLIES; FRC ELEMENTARY FUNDS	MILLER ELEMENTARY	010	$253.43
26002787	NATIONAL ASSOCIATION OF ELEMENTARY SCHOOL PRINCIPA	STUDENT AWARDS	EMERSON ELEMENTARY	010	$146.36
26002788	JAFFE, GLEN H.	CONSULTANT AGREEMENT; EVENT PERFORMANCE; TITLE I FUNDS; BOARD APPROVED 2/12/26	MUIR MIDDLE SCHOOL	010	$1,500.00
26002789	VARGAS, WENDY	REIMBURSEMENT TO ASSISTANT PRINCIPAL FOR FOOD FOR EVENT; GIFT FUNDS	MUIR MIDDLE SCHOOL	010	$2,128.83
26002791	SCHOOL ZONE TRANSPORTATION, INC	STUDENT TRANSPORTATION; SIX FLAGS MAGIC MOUNTAIN; ACCOUNTS RECEIVABLE	LUTHER BURBANK MIDDLE SCHOOL	010	$2,400.00
26002792	SCHOOL ZONE TRANSPORTATION, INC	STUDENT TRANSPORTATION; LEONIS ADOBE MUSEUM; PTA FUNDS	EDISON ELEMENTARY	010	$1,500.00
26002793	SCHOOL ZONE TRANSPORTATION, INC	STUDENT TRANSPORTATION; BURBANK CITY HALL; GIFT FUNDS	ROOSEVELT ELEMENTARY	010	$750.00
26002794	SCHOOL ZONE TRANSPORTATION, INC	STUDENT TRANSPORTATION; LEONIS ADOBE MUSEUM; GIFT FUNDS	ROOSEVELT ELEMENTARY	010	$1,500.00
26002795	SCHOOL ZONE TRANSPORTATION, INC	STUDENT TRANSPORTATION; DISCOVERY CUBE LA; GIFT FUNDS	ROOSEVELT ELEMENTARY	010	$1,545.00
26002796	SCHOOL ZONE TRANSPORTATION, INC	STUDENT TRANSPORTATION; CALIFORNIA SCIENCE CENTER; GIFT FUNDS	ROOSEVELT ELEMENTARY	010	$1,590.00
26002797	SCHOOL ZONE TRANSPORTATION, INC	STUDENT TRANSPORTATION; WILDLIFE LEARNING CENTER; GIFT FUNDS	ROOSEVELT ELEMENTARY	010	$750.00
26002799	BALLS AND WHISTLES DBA AMAZING ATHLETES	CONSULTANT AGREEMENT; SPORTS ENRICHMENT; ELOP FUNDS; BOARD APPROVED 3/26/26	CHILD DEVELOPMENT SERVICES	010	$7,500.00
26002800	SCHOOL ZONE TRANSPORTATION, INC	STUDENT TRANSPORTATION; SIX FLAGS MAGIC MOUNTAIN; ACCOUNTS RECEIVABLE	MUIR MIDDLE SCHOOL	010	$2,800.00
26002801	MACIAS, SANDRA	REIMBURSEMENT TO TEACHER FOR DRY CLEANING OF FORMAL WEAR FOR STUDENTS; BAEF FUNDS	JOHN BURROUGHS HIGH SCHOOL	010	$500.00
26002802	BUREAU OF EDUCATION & RESEARCH	SEMINAR RECORDING; MEDICAL ADMIN ACTIVITIES FUNDS	SPECIAL EDUCATION	010	$295.00
26002803	KAUR, HARJOT	REIMBURSEMENT TO TEACHER FOR SOFTWARE LICENSES; TITLE III - LEP STUDENT PROGRAM FUNDS	JOHN BURROUGHS HIGH SCHOOL	010	$268.23
26002804	THE CRANE GUYS, LLC	EQUIPMENT RENTAL; ON-GOING AND MAJOR MAINTENANCE FUNDS	JOHN BURROUGHS HIGH SCHOOL	010	$805.00
26002805	JIMENEZ, SALVADOR	REIMBUSREMENT TO OFFICE MANAGER FOR FOOD FOR EVENT; FILM LA FUNDS	LUTHER BURBANK MIDDLE SCHOOL	010	$625.87
26002806	SOUTHWEST SCHOOL & OFFICE SUPPLY	AUDIO-VISUAL EQUIPMENT; CHILD DEVELOPMENT FUNDS	WASHINGTON CHILDREN´S CENTER	120	$220.99
26002807	GOPHER SPORT	PLAYGROUND SUPPLIES	MUIR MIDDLE SCHOOL	010	$1,557.64

BOARD DETAIL REPORT

Printed between 03/24/2026 & 04/13/2026

PO Number	Vendor	Description	Site	Fund	Total Amount
26002808	2 GUYS TERMITE, INC.	TERMITE INSPECTION AT BURBANK ADULT SCHOOL; ON-GOING AND MAJOR MAINTENANCE FUNDS	FACILITIES SERVICES	010	$850.00
26002809	AMTECH ELEVATOR SERVICES	ELEVATOR SERVICE AT PROVIDENCIA ELEMENTARY; ON-GOING AND MAJOR MAINTENANCE FUNDS	FACILITIES SERVICES	010	$2,724.40
26002810	VENTRIS LEARNING	CLASSROOM SUPPLIES; TITLE I FUNDS	DISNEY ELEMENTARY	010	$285.20
26002811	SCN WORLDWIDE LLC	CLASSROOM SUPPLIES; TITLE I FUNDS	MUIR MIDDLE SCHOOL	010	$881.64
26002812	WARD'S NATURAL SCIENCE	CLASSROOM SUPPLIES	JOHN BURROUGHS HIGH SCHOOL	010	$714.50
26002813	J TAYLOR EDUCATION, INC.	CONSULTANT AGREEMENT; STAFF PROFESSIONAL DEVELOPMENT; EDUCATOR EFFECTIVENESS FUNDS; BOARD APPROVED 3/26/26	DISNEY ELEMENTARY	010	$4,500.00
26002814	ALMANZAR-LEAL, CAROLINA	REIMBURSEMENT TO TEACHER FOR EXAM REGISTRATION	JOHN BURROUGHS HIGH SCHOOL	010	$50.00
26002815	GRIMSHAW, DENA	REIMBURSEMENT TO TEACHER FOR FOOD FOR EVENT; GIFT FUNDS	DOLORES HUERTA MIDDLE SCHOOL	010	$800.00
26002816	LAKESHORE CURRICULUM MATERIAL	CLASSROOM SUPPLIES; TITLE III - LEP STUDENT PROGRAM FUNDS	JEFFERSON ELEMENTARY	010	$112.14
26002817	PUPPET ART THEATER CO, LLC	CONSULTANT AGREEMENT; PUPPET SHOW; FRC ELEMENTARY FUNDS; BOARD APPROVED 3/26/26	EDISON ELEMENTARY	010	$425.00
26002818	THE GRIP HOUSE LLC	STAGE RENTAL; FRC ELEMENTARY FUNDS	STEVENSON ELEMENTARY	010	$639.20
26002819	MB DANCE INC	CONSULTANT AGREEMENT; DANCE INSTRUCTION; AMS FUNDS; BOARD APPROVED 12/18/25	MILLER ELEMENTARY	010	$19,350.00
26002820	LIBRE SCHOOL SERVICES	STUDENT TRANSPORTATION; BAND; GENERAL AND IMA FUNDS	JOHN BURROUGHS HIGH SCHOOL	010	$575.00
26002821	LIBRE SCHOOL SERVICES	STUDENT TRANSPORTATION; ATHLETICS	JOHN BURROUGHS HIGH SCHOOL	010	$5,400.00
26002822	BEST BUY GOV LLC	KITCHEN EQUIPMENT	LUTHER BURBANK MIDDLE SCHOOL	010	$3,165.14
26002823	MAGIC JUMP RENTALS, INC.	EQUIPMENT RENTAL; FRC ELEMENTARY FUNDS	EMERSON ELEMENTARY	010	$1,520.00
26002824	LEONIS ADOBE MUSEUM	FIELD TRIP ADMISSION; LEONIS ADOBE MUSEUM; GIFT FUNDS	ROOSEVELT ELEMENTARY	010	$1,056.00
26002825	APPLE COMPUTER ED SALES	COMPUTER EQUIPMENT; TITLE I FUNDS	MUIR MIDDLE SCHOOL	010	$983.09
26002826	CDW-G - COMPUTER DISCOUNT WHSE	AUDIO VISUAL EQUIPMENT; TITLE I FUNDS	MUIR MIDDLE SCHOOL	010	$4,145.43
26002827	BRASS MAVENS LLC	INSTRUMENT REPAIR	JOHN BURROUGHS HIGH SCHOOL	010	$400.00
26002828	SAPLING, INC.	OFFICE SUPPLIES; ON-GOING AND MAJOR MAINTENANCE FUNDS	FACILITIES SERVICES	010	$2,479.34
26002829	PENN TOOL CO.	CLASSROOM SUPPLIES; BAEF FUNDS	EDISON ELEMENTARY	010	$437.74
26002830	TIME AND ALARM SYSTEMS	SAFETY EQUIPMENT; ON-GOING AND MAJOR MAINTENANCE FUNDS	FACILITIES SERVICES	010	$4,286.33
26002831	CITY OF BURBANK	FALSE ALARM FINES; ON-GOING AND MAJOR MAINTENANCE FUNDS	FACILITIES SERVICES	010	$700.00

BOARD DETAIL REPORT

Printed between 03/24/2026 & 04/13/2026

PO Number	Vendor	Description	Site	Fund	Total Amount
26002832	WILDLIFE LEARNING CENTER	FIELD TRIP ADMISSION; WILDLIFE LEARNING CENTER; GIFT FUNDS	ROOSEVELT ELEMENTARY	010	$750.00
26002833	LIBRE SCHOOL SERVICES	STUDENT TRANSPORTATION; SAN GABRIEL MISSION PLAYHOUSE; FRC ELEMENTARY FUNDS	MILLER ELEMENTARY	010	$1,275.00
26002834	RUSSELL SIGLER INC	HVAC REPAIR MATERIAL; ON-GOING AND MAJOR MAINTENANCE FUNDS	FACILITIES SERVICES	010	$2,080.60
26002835	PLUMBING WHOLESALE OUTLET INC	FACILITIES REPAIR MATERIALS; ON-GOING AND MAJOR MAINTENANCE FUNDS	FACILITIES SERVICES	010	$972.39
26002836	EHP SOLUTIONS	AUDIO EQUIPMENT; ADULT EDUCATION - BLOCK GRANT	BURBANK ADULT SCHOOL	110	$14,033.50
26002837	EHP SOLUTIONS	AUDIO EQUIPMENT; ADULT EDUCATION BLOCK-GRANT	BURBANK ADULT SCHOOL	110	$2,806.70
26002838	BOOTCHK, ERICA	CARRYOVER PO 25003472; CONSULTANT AGREEMENT; ART INSTRUCTION; AMS FUNDS; BOARD APPROVED 2/20/25	MONTEREY HIGH SCHOOL	010	$4,500.00
26002839	AMAZON CAPITAL SERVICES	CLASSROOM SUPPLIES; SPECIAL EDUCATION FUNDS	MC KINLEY ELEMENTARY	010	$950.33
26002840	AMAZON CAPITAL SERVICES	CLASSROOM EQUIPMENT	LUTHER BURBANK MIDDLE SCHOOL	010	$1,267.41
26002841	U.S. POSTAL SERVICE	PERMIT RENEWAL FEE; ADULT ED GENERAL APPORTIONMENT	BURBANK ADULT SCHOOL	110	$370.00
26002842	AMAZON CAPITAL SERVICES	2025-26 BLANKET ORDER; CLASSROOM AND OFFICE SUPPLIES; SPECIAL EDUCATION FUNDS	JOHN BURROUGHS HIGH SCHOOL	010	$1,068.00
26002843	SCHOLASTIC INC.	BOOKS; TITLE I FUNDS	DISNEY ELEMENTARY	010	$576.36
26002844	AMAZON CAPITAL SERVICES	2025-26 BLANKET ORDER; CLASSROOM AND OFFICE SUPPLIES; SPECIAL EDUCATION FUNDS	JEFFERSON ELEMENTARY	010	$300.00
26002845	SCHOOL SPECIALTY, LLC	CLASSROOM SUPPLIES; FRC ELEMENTARY FUNDS	JEFFERSON ELEMENTARY	010	$86.96
26002846	BAD WOLF PRESS	CLASSROOM MATERIALS	STEVENSON ELEMENTARY	010	$45.00
26002847	AMAZON CAPITAL SERVICES	CLASSROOM SUPPLIES; TITLE III IMMIGRANT EDUCATION FUNDS	STEVENSON ELEMENTARY	010	$676.86
26002848	VINYARD, LAURA	REIMBURSEMENT TO PRINCIPAL FOR STUDENT AWARDS AND STAFF SHIRTS	WASHINGTON ELEMENTARY	010	$505.42
26002849	DEMCO INC	LIBRARY SUPPLIES; GIFT FUNDS	STEVENSON ELEMENTARY	010	$71.76
26002850	LAKESHORE CURRICULUM MATERIAL	CLASSROOM SUPPLIES; TITLE III IMMIGRANT EDUCATION FUNDS	STEVENSON ELEMENTARY	010	$248.72
26002851	SCHOLASTIC INC.	BOOKS; CHILD DEVELOPMENT FUNDS	WASHINGTON CHILDREN´S CENTER	120	$232.28
26002852	C & M TOPSOIL INC.	GROUNDS SUPPLIES; UNRESTRICTED MAINTENANCE FUNDS	EMERSON ELEMENTARY	010	$3,480.75
26002853	TEACHER SYNERGY LLC	CLASSROOM SUPPLIES; TITLE III IMMIGRANT EDUCATION FUNDS	STEVENSON ELEMENTARY	010	$115.94
26002855	AMAZON CAPITAL SERVICES	2025-26 BLANKET ORDER; CLASSROOM AND OFFICE SUPPLIES	BURBANK HIGH SCHOOL	010	$1,000.00

BOARD DETAIL REPORT

Printed between 03/24/2026 & 04/13/2026

PO Number	Vendor	Description	Site	Fund	Total Amount
26002856	MARENEM INC	CLASSROOM SUPPLIES; TITLE I FUNDS	EMERSON ELEMENTARY	010	$801.30
26002857	RENAISSANCE LEARNING	SOFTWARE LICENSE; LCAP FUNDS; BOARD APPROVED 6-18-25	BRET HARTE ELEMENTARY	010	$4,230.00
26002858	JPMORGAN CHASE BANK	BOOKS; TITLE I FUNDS	DISNEY ELEMENTARY	010	$425.92
26002859	HATCH, ROBIN	REIMBURSEMENT TO PRINCIPAL FOR EVENT EQUIPMENT RENTAL; GIFT FUNDS	DOLORES HUERTA MIDDLE SCHOOL	010	$929.75
26002860	MARSHMEDIA	SOFTWARE LICENSE; LOTTERY FUNDS	INSTRUCTIONAL SERVICES	010	$800.00
26002861	RENAISSANCE LEARNING	SOFTWARE LICENSE; TITLE I FUNDS; BOARD APPROVED 6/18/26	MILLER ELEMENTARY	010	$25,086.30
26002862	DIGITAL SCEPTER CORPORATION	COMPUTER NETWORKING EQUIPMENT - FIREWALL; BOARD APPROVED 3/26/26	TECHNOLOGY SERVICES	010	$517,210.65
26002863	SCHOOL NURSE SUPPLY	HEALTH SUPPLIES	ROOSEVELT ELEMENTARY	010	$298.62
26002864	ECOLAB	PROFESSIONAL SERVICES; PEST CONTROL; CHILD NUTRITION SCHOOL PROGRAM FUNDS; BOARD APPROVED 3/26/26	FOOD SERVICES	130	$12,617.96
26002865	ULINE - Attn: ACCOUNTS RECEIVABLES	PLAYGROUND EQUIPMENT	BURBANK HIGH SCHOOL	010	$1,278.39
26002866	HAMERAY PUBLISHING GROUP, INC.	BOOKS	DISNEY ELEMENTARY	010	$2,750.26
26002867	NATIONAL ASSOCIATION OF ELEMENTARY SCHOOL PRINCIPA	STUDENT AWARDS	MC KINLEY ELEMENTARY	010	$294.33
26002868	CAROLINA BIOLOGICAL SUPPLY CO	CLASSROOM SUPPLIES	BURBANK HIGH SCHOOL	010	$246.41
26002869	HERRERA, BRANDON	REIMBURSEMENT TO TEACHER FOR CLASSROOM SUPPLIES	EMERSON ELEMENTARY	010	$27.61
26002870	BOOSTER ENTERPRISES INC.	CUSTOM CLOTHING; FRC ELEMENTARY FUNDS	EDISON ELEMENTARY	010	$3,620.73
26002871	AMAZON CAPITAL SERVICES	2025-26 BLANKET ORDER; BOOKS; PTA FUNDS	JOHN BURROUGHS HIGH SCHOOL	010	$1,500.00
26002872	THEATRE EXPERIENCE OF SOUTHERN CALIFORNIA	FIELD TRIP ADMISSION; THEATRE EXPERIENCE OF SO CAL; GIFT AND FRC FUNDS	MILLER ELEMENTARY	010	$1,341.00
26002873	FLINN SCIENTIFIC INC	CLASSROOM SUPPLIES	BURBANK HIGH SCHOOL	010	$1,373.03
26002874	RED RIVER PRESS INC.	SOFTWARE LICENSE; TITLE III FUNDS	JOHN BURROUGHS HIGH SCHOOL	010	$500.00
26002875	SUNBELT CONTROLS INC	FACILITY REPAIR MATERIAL; ON-GOING AND MAJOR MAINTENANCE FUNDS	FACILITIES SERVICES	010	$1,073.00
26002876	FLEWELLING & MOODY INC	PROFESSIONAL SERVICES AGREEMENT; ARCHITECTURE SERVICES FOR BRET HARTE ELEMENTARY SECURITY AND ADA IMPROVEMENTS; BOND FUND; BOARD APPROVED 3/26/26	BRET HARTE ELEMENTARY	210	$115,000.00
26002877	BENTLEY, JAMES	REIMBURSEMENT TO TEACHER FOR CLASSROOM SUPPLIES	BURBANK HIGH SCHOOL	010	$66.90

Printed between 03/24/2026 & 04/13/2026

PO Number	Vendor	Description	Site	Fund	Total Amount
26002878	PACINO, LORI	REIMBURSEMENT TO ASSISTANT PRINCIPAL FOR FOOD FOR EVENT; GIFT FUNDS	MUIR MIDDLE SCHOOL	010	$107.06
26002879	LACOE	BOOKS	Student Services	010	$249.52
26002880	JPMORGAN CHASE BANK	PAINTING AND OFFICE SUPPLIES; FRC ELEMENTARY FUNDS	JEFFERSON ELEMENTARY	010	$600.59
26002881	LAKESHORE CURRICULUM MATERIAL	CLASSROOM SUPPLIES; TITLE III - LEP STUDENT PROGRAM FUNDS	EDISON ELEMENTARY	010	$526.60
26002882	SPECIAL EDUCATION PARENTS	SETTLEMENT AGREEEMENT; REIMBURSEMENT TO PARENT FOR TUITION, TRANSPORTATION & TUTORING SERVICES; SPECIAL EDUCATION FUNDS; BOARD APPROVED 3/5/26	SPECIAL EDUCATION	010	$48,300.00
26002883	HOUGHTON MIFFLIN HARCOURT SCHOOL DIVISION	CLASSROOM SUPPLIES; TITLE III - LEP STUDENT PROGRAM FUNDS	MC KINLEY ELEMENTARY	010	$198.71
26002884	AMAZON CAPITAL SERVICES	CLASSROOM SUPPLIES; TITLE III - LEP STUDENT PROGRAM FUNDS	MC KINLEY ELEMENTARY	010	$716.10
26002885	REYES, DALI MERCEDES	REIMBURSEMENT TO TEACHER FOR CLASSROOM SUPPLIES; SPECIAL EDUCATION FUNDS	JOHN BURROUGHS HIGH SCHOOL	010	$101.20
26002886	LAKESHORE CURRICULUM MATERIAL	CLASSROOM SUPPLIES; SPECIAL EDUCATION FUNDS	HORACE MANN CHILDREN´S CENTER	010	$62.31
26002887	NATIONAL ASSOCIATION OF ELEMENTARY SCHOOL PRINCIPA	STUDENT AWARDS	PROVIDENCIA ELEMENTARY	010	$228.90
26002888	NET WORLD SPORTS OH LLC	ATHLETIC EQUIPMENT	BURBANK HIGH SCHOOL	010	$5,835.48
26002889	LOPEZ-RAZO, JACOB	REIMBURSEMENT TO WORKABILITY STUDENT FOR AN EXAM; SPED WORKABILITY GRANT	SPECIAL EDUCATION	010	$11.99
26002890	APONIK, SHARON	REIMBURSEMENT TO EMPLOYEE FOR LOSS OF PERSONAL ITEM AT WORK	MUIR MIDDLE SCHOOL	010	$46.36
26002891	GUITAR CENTER	MUSICAL INSTRUMENT; MUSIC IS INSTRUMENTAL FUNDS	BURBANK HIGH SCHOOL	010	$3,005.60
26002892	AMAZON CAPITAL SERVICES	CLASSROOM SUPPLIES; TITLE III IMMIGRANT EDUCATION FUNDS	EDISON ELEMENTARY	010	$240.85
26002893	AMAZON CAPITAL SERVICES	2025-26 BLANKET ORDER; PTA FUNDS	JOHN BURROUGHS HIGH SCHOOL	010	$1,477.00
26002894	AREY JONES EDUCATIONAL SOLUTIONS	COMPUTER EQUIPMENT; TITLE I FUNDS	LUTHER BURBANK MIDDLE SCHOOL	010	$7,407.99
26002895	BECKER & MIYAMOTO, INC. LICENSED LAND SURVERYORS	PROFESSIONAL SERVICES; LAND SURVEY; BOND FUNDS; BOARD APPROVED 3/26/26	BURBANK HIGH SCHOOL	210	$24,180.00
26002896	MOLLENHAUER GROUP CIVIL, INC.	PROFESSIONAL SERVICES AGREEMENT; GPR SURVEY; BOND FUNDS; BOARD APPROVED 3/26//26	BURBANK ADULT SCHOOL	210	$29,240.00
26002897	GIAMPIETRO, TRAVIS	REIMBURSEMENT TO STUDENT FOR SERVSAFE CERTIFICATION COURSE; SPED - WORKABILITY GRANT	SPECIAL EDUCATION	010	$11.99
26002898	CURRICULUM ASSOCIATES INC	CLASSROOM SUPPLIES	PROVIDENCIA ELEMENTARY	010	$351.72

BOARD DETAIL REPORT

Printed between 03/24/2026 & 04/13/2026

PO Number	Vendor	Description	Site	Fund	Total Amount
26002899	JPMORGAN CHASE BANK	OUTDOOR STORAGE SHED; FRC ELEMENTARY FUNDS	JEFFERSON ELEMENTARY	010	$433.15
26002900	JPMORGAN CHASE BANK	GROUNDS EQUIPMENT	JEFFERSON ELEMENTARY	010	$499.42
26002901	JONES SCHOOL SUPPLY CO INC	STUDENT AWARDS	MILLER ELEMENTARY	010	$68.47
26002902	NATIONAL ASSOCIATION OF ELEMENTARY SCHOOL PRINCIPA	STUDENT AWARDS	MILLER ELEMENTARY	010	$219.04
26002903	IDJLA	CONSULTANT; DJ SERVICE; FRC ELEMENTARY FUNDS	JEFFERSON ELEMENTARY	010	$500.00
26002904	FIRST UNITED METHODIST CHURCH OF BURBANK & NURSERY	RENTAL HALL FOR EVENT; FRC ELEMENTARY FUNDS	JEFFERSON ELEMENTARY	010	$650.00
26002905	AMAZON CAPITAL SERVICES	2025-26 BLANKET ORDER; CLASSROOM AND OFFICE SUPPLIES; AMS FUNDS	BURBANK HIGH SCHOOL	010	$6,000.00
26002906	AMAZON CAPITAL SERVICES	OFFICE SUPPLIES	WASHINGTON ELEMENTARY	010	$149.25
26002907	AMAZON CAPITAL SERVICES	2025-26 BLANKET ORDER; CLASSROOM AND OFFICE SUPPLIES; LCAP FUNDS	JEFFERSON ELEMENTARY	010	$500.00
26002908	PEARSON ASSESSMENT	TESTING MATERIALS	SPECIAL EDUCATION	010	$5,417.59

PO Count: **236** **Total:** **$5,130,274.37**

Printed between 03/24/2026 & 04/13/2026

BOARD FUND SUMMARY

Fund	Description	PO Count	Total Fund Amount
010	General Fund - Unrestricted	206	$1,344,088.44
110	Adult Education Fund	6	$279,657.89
120	Child Development Fund	8	$28,183.78
130	Cafeteria Fund	5	$261,988.81
210	Building Fund	7	$762,060.29
400	Special Res./for Cap. Outlay	2	$2,440,189.18
670	Self Insurance Fund	2	$14,105.98
		Total:	**$5,130,274.37**

PURCHASE ORDER

BURBANK UNIFIED SCHOOL DISTRICT

1900 WEST OLIVE AVE, BURBANK, CA 91506-2460
Phone: (818) 729-4400 Fax: (818) 729-4534

PURCHASE ORDER NO.
25002346
Show this number on invoices, packages and correspondence.

HART DESIGN BUILD, INC.

Vendor# 405477

VENDOR
HART DESIGN BUILD, INC.
3449 ANGELUS AVE
GLENDALE, CA 91208

Phone: (818) 482-5241 **Fax:**

SHIP TO
BURBANK UNIFIED SCHOOL DISTRICT
BURBANK HIGH SCHOOL
902 N. THIRD ST.
BURBANK, CA 91502-1091

For: FACILITIES SERVICES
COZAKOS/MAXWELL

PO Date: 08/28/2025 **Requested Delivery:** 06/30/2026 **Buyer Name:** David Gerharter **Req#** DAVID G2346

ITEM NO.	QTY ORDERED	UNIT OF ISSUE	DESCRIPTION	UNIT PRICE	AMOUNT
1	1	CO	CHANGE ORDER #6, INCREASE BY $21,110.12 FOR A REVISED TOTAL OF $2,321,280.61 AS PER REQ R0003312. TO FACILITATE ITEMS NOT INCLUDED IN THE ORIGINAL DESIGN AND SCOPE OF THE CONTRACT THIS CHANGE ORDER BRINGS THE TOTAL NOT TO EXCEED AMOUNTOF THIS CONTRACT TO $3,605,293.37 BOARD APPROVED 3/5/2026 **********	21,110.12	21,110.12
2	1	CO	CHANGE ORDER #5, INCREASE BY $13,421.01 FOR A REVISED TOTAL OF $2,300,170.49 AS PER REQ R0002686 TO FACILITATE ITEMS NOT INCLUDED IN THE ORIGINAL DESIGN AND SCOPE OF THE CONTRACT THIS CHANGE ORDER BRINGS THE TOTAL NOT TO EXCEED AMOUNTOF THIS CONTRACT TO $3,584,183.25 BOARD APPROVED 2/5/2026 **********	13,421.01	13,421.01
3	1	CO	CHANGE ORDER #4, INCREASE BY $78,042.00 FOR A REVISED TOTAL OF $2,286,749.48 AS PER REQ R0001975. TO FACILITATE THE ADDITION OF 5 ITEMS (DETAILED IN BOARD	78,042.00	78,042.00

ACCOUNT NUMBER	AMOUNT
400-90329-0-00000-85000-6250-431-0000-0000	$2,321,280.61

Contract Number
2425-003
Public Works

SUB TOTAL	$ 2,321,280.61
SALES TAX	$ 0.00
SHIPPING	$ 0.00
TOTAL	$ 2,321,280.61

(A)	SHIPMENT	DATE
(B)	SHIPMENT	DATE
(C)	SHIPMENT	DATE
(D)	SHIPMENT	DATE
(E)	SHIPMENT	DATE

BURBANK UNIFIED SCHOOL DISTRICT

Approved By:

PURCHASING COPY

PURCHASE ORDER

BURBANK UNIFIED SCHOOL DISTRICT

1900 WEST OLIVE AVE, BURBANK, CA 91506-2460
Phone: (818) 729-4400 Fax: (818) 729-4534

PURCHASE ORDER NO.
26000219
Show this number on invoices, packages and correspondence.

VENDOR

AMAZON CAPITAL SERVICES
PO BOX 035184
SEATTLE, WA 98124-5184

Phone: (206) 435-3958 **Fax:**

SHIP TO

BURBANK UNIFIED SCHOOL DISTRICT
MILLER ELEMENTARY
720 E. PROVIDENCIA AVE.
BURBANK, CA 91501-2499

For: MILLER ELEMENTARY
G. TANNER/for Supplies for New School Year

PO Date: 06/11/2025 **Deliver By:** 07/01/2025 **Buyer Name:** Maro Bojolyan

ITEM NO.	QTY ORDERED	UNIT OF ISSUE	DESCRIPTION	UNIT PRICE	AMOUNT
1	1	CO	CHANGE ORDER #4: INCREASE P.O. # 2600219 BY $2,000.00 FOR A REVISED TOTAL OF $13,250.00 DUE TO NEED TO PURCHASE MORE SUPPLIES FOR TEACHERS AND STOCK, AS PER R0003239. **********	2,000.00	2,000.00
2	1	CO	CHANGE ORDER #3: INCREASE BY $5000.00 FOR A REVISED TOTAL OF $11,250.00 AS PER R0001318 DUE TO NEED TO PURCASE MORE CLASSROOM SUPPLIES AND STOCK **********	5,000.00	5,000.00
3	1	CO	CHANGE ORDER #2: INCREASE BY $1050.00 FOR A REVISED TOTAL OF $6250.00 AS PER R0001317, DUE TO AMAZON BLANKET WAS ORIGINALLY CREATED FOR GENERAL SUPPLIES. THIS INCREASE COVERS MONIES SPENT BY TEACHERS FOR THEIR APEX INCENTIVE. IT IS BEING INCREASED TO REPLENISH THE AMAZON BLANKET FOR FUTURE **********	1,050.00	1,050.00
4	1	CO	CHANGE ODER #1: INCREASE BY $200 FOR A REVISED TOTAL OF $5200.00 AS PER R0001241, DUE TO PURCHASE SUPPLIES THAT WERE NOT INITIALLY ACCOUNTED FOR WITH THE GRADE LEVEL ORDERS. **********	200.00	200.00
5	1	LOT	>>> 2025 - 2026 BLANKET ORDER <<< BLANKET ORDER TO COVER THE COST OF SUPPLIES AND	5,000.00	5,000.00

SUB TOTAL	$ 13,250.00
SALES TAX	$ 0.00
SHIPPING	$ 0.00
TOTAL	$ 13,250.00

Vendor Instructions:

1. **Show purchase order number on all invoices, shipping papers and correspondence.**
2. **Mail invoice in duplicate Attn: Accounts Payable, at the above address.**
3. **Packing slip must accompany each delivery showing purchase order, catalog number, serial number and description.**
4. **No changes without written authorization from purchasing.**
5. **If freight charges are applicable, prepay and add to invoice. No C.O.D. charges permitted.**
6. **All vendors/manufacturers representatives must send manufacturers safety data sheet (OSHA Form 20 or equivalent) with shipment when applicable.**

BURBANK UNIFIED SCHOOL DISTRICT

Approved By: Oscar Macias, Ed.D.
"OVERSERVE THE UNDERSERVED"

VENDOR COPY

PURCHASE ORDER

BURBANK UNIFIED SCHOOL DISTRICT

1900 WEST OLIVE AVE, BURBANK, CA 91506-2460
Phone: (818) 729-4400 Fax: (818) 729-4534

PURCHASE ORDER NO.
26000219
Show this number on invoices, packages and correspondence.

VENDOR

AMAZON CAPITAL SERVICES
PO BOX 035184
SEATTLE, WA 98124-5184

Phone: (206) 435-3958 **Fax:**

SHIP TO

BURBANK UNIFIED SCHOOL DISTRICT
MILLER ELEMENTARY
720 E. PROVIDENCIA AVE.
BURBANK, CA 91501-2499

For: MILLER ELEMENTARY
G. TANNER/for Supplies for New School Year

PO Date: 06/11/2025 **Deliver By:** 07/01/2025 **Buyer Name:** Maro Bojolyan

ITEM NO.	QTY ORDERED	UNIT OF ISSUE	DESCRIPTION	UNIT PRICE	AMOUNT
			MATERIALS, NOT EQUIPMENT, TO BE ORDERED ONLINE ON AN "AS NEEDED" BASIS, EFFECTIVE 7/1/2025 THROUGH 6/30/2026. TOTAL AMOUNT OF THIS ORDER IS NOT TO EXCEED $5000 (INCLUDING TAX & SHIPPING) ALL ORDERS TO BE DELIVERED, MONDAY-FRIDAY, 8:00 AM TO 4:00 PM, TO JOAQUIN MILLER ELEMENTARY SCHOOL ATTN: GLORIA TANNER 720 E. PROVIDENCIA AVE. BURBANK, CA 91501 INSTRUCTIONS TO AMAZON USER: SELECT BLANKET PO 26000219 WHEN CHECKING OUT A CART ON AMAZON. UPON RECEIPT OF THE ORDER, COMPLETE A RECEIVING REPORT AND SUBMIT TO ACCOUNTS PAYABLE. IF YOU DO NOT LOCATE A PACKING LIST, PLEASE GO TO THE VENDOR'S WEBSITE AND BRING UP THE ORDER NUMBER FOR YOUR DELIVERY, PRINT IT OUT, CHECK OFF THE ITEMS, SIGN AND DATE THE PRINT OUT AND SEND IT TO ACCOUNTS PAYABLE. THE VENDOR WILL NOT BE PAID FOR EACH SHIPMENT UNTIL WE HAVE RECEIVED YOUR APPROVAL.		

Vendor Instructions:

1. **Show purchase order number on all invoices, shipping papers and correspondence.**
2. **Mail invoice in duplicate Attn: Accounts Payable, at the above address.**
3. **Packing slip must accompany each delivery showing purchase order, catalog number, serial number and description.**
4. **No changes without written authorization from purchasing.**
5. **If freight charges are applicable, prepay and add to invoice. No C.O.D. charges permitted.**
6. **All vendors/manufacturers representatives must send manufacturers safety data sheet (OSHA Form 20 or equivalent) with shipment when applicable.**

SUB TOTAL	$ 13,250.00
SALES TAX	$ 0.00
SHIPPING	$ 0.00
TOTAL	$ 13,250.00

BURBANK UNIFIED SCHOOL DISTRICT

Approved By: Oscar Macias, Ed.D.

"OVERSERVE THE UNDERSERVED"

VENDOR COPY

PURCHASE ORDER

BURBANK UNIFIED SCHOOL DISTRICT

1900 WEST OLIVE AVE, BURBANK, CA 91506-2460
Phone: (818) 729-4400 Fax: (818) 729-4534

PURCHASE ORDER NO.
26000249
Show this number on invoices, packages and correspondence.

VENDOR

AMAZON CAPITAL SERVICES
PO BOX 035184
SEATTLE, WA 98124-5184

Phone: (206) 435-3958 **Fax:**

SHIP TO

BURBANK UNIFIED SCHOOL DISTRICT
WASHINGTON ELEMENTARY
2322 N. LINCOLN ST.
BURBANK, CA 91504-2625

For: WASHINGTON ELEMENTARY
C. DOOMANIS/VINYARD/LISA ZAVALA AMAZON GI

PO Date: 06/12/2025 **Deliver By:** 07/01/2025 **Buyer Name:** Maro Bojolyan

ITEM NO.	QTY ORDERED	UNIT OF ISSUE	DESCRIPTION	UNIT PRICE	AMOUNT
1	1	CO	CHANGE ORDER #2: INCREASE BY $2,500.00 FOR A REVISED TOTAL OF $5000.00 DUE TO ADDITIONAL SUPPLY ORDERS, AS PER R0003152. **********	2,500.00	2,500.00
2	1	CO	CHANGE ORDER #1: INCREASE BY $1,000.00 FOR A REVISED TOTAL OF $2,500.00 DUE TO MATERIALS AND SUPPLIES FOR GWE. **********	1,000.00	1,000.00
3	1	LOT	>>> 2025 - 2026 BLANKET ORDER <<< BLANKET ORDER TO COVER THE COST OF SUPPLIES AND MATERIALS, NOT EQUIPMENT, TO BE ORDERED ONLINE ON AN "AS NEEDED" BASIS, EFFECTIVE 7/1/2025 THROUGH 6/30/2026. TOTAL AMOUNT OF THIS ORDER IS NOT TO EXCEED $1,500.00 (INCLUDING TAX & SHIPPING) ALL ORDERS TO BE DELIVERED, MONDAY-FRIDAY, 8:00 AM TO 4:00 PM, TO (GEORGE WASHINGTON ELEMENTARY) ATTN: (LISA ZAVALA) (2322 N. LINCOLN STREET) BURBANK, CA 91504 INSTRUCTIONS TO AMAZON USER: SELECT BLANKET PO 26000249 WHEN CHECKING OUT A CART ON	1,500.00	1,500.00

Vendor Instructions:

1. **Show purchase order number on all invoices, shipping papers and correspondence.**
2. **Mail invoice in duplicate Attn: Accounts Payable, at the above address.**
3. **Packing slip must accompany each delivery showing purchase order, catalog number, serial number and description.**
4. **No changes without written authorization from purchasing.**
5. **If freight charges are applicable, prepay and add to invoice. No C.O.D. charges permitted.**
6. **All vendors/manufacturers representatives must send manufacturers safety data sheet (OSHA Form 20 or equivalent) with shipment when applicable.**

SUB TOTAL	$ 5,000.00
SALES TAX	$ 0.00
SHIPPING	$ 0.00
TOTAL	$ 5,000.00

BURBANK UNIFIED SCHOOL DISTRICT

Approved By: Oscar Macias, Ed.D.

"OVERSERVE THE UNDERSERVED"

VENDOR COPY

PURCHASE ORDER

BURBANK UNIFIED SCHOOL DISTRICT

1900 WEST OLIVE AVE, BURBANK, CA 91506-2460
Phone: (818) 729-4400 Fax: (818) 729-4534

PURCHASE ORDER NO.
26000249
Show this number on invoices, packages and correspondence.

VENDOR

AMAZON CAPITAL SERVICES
PO BOX 035184
SEATTLE, WA 98124-5184

Phone: (206) 435-3958 **Fax:**

SHIP TO

BURBANK UNIFIED SCHOOL DISTRICT
WASHINGTON ELEMENTARY
2322 N. LINCOLN ST.
BURBANK, CA 91504-2625

For: WASHINGTON ELEMENTARY
C. DOOMANIS/VINYARD/LISA ZAVALA AMAZON Gl

PO Date: 06/12/2025 **Deliver By:** 07/01/2025 **Buyer Name:** Maro Bojolyan

ITEM NO.	QTY ORDERED	UNIT OF ISSUE	DESCRIPTION	UNIT PRICE	AMOUNT
			AMAZON. UPON RECEIPT OF THE ORDER, COMPLETE A RECEIVING REPORT AND SUBMIT TO ACCOUNTS PAYABLE. IF YOU DO NOT LOCATE A PACKING LIST, PLEASE GO TO THE VENDOR'S WEBSITE AND BRING UP THE ORDER NUMBER FOR YOUR DELIVERY, PRINT IT OUT, CHECK OFF THE ITEMS, SIGN AND DATE THE PRINT OUT AND SEND IT TO ACCOUNTS PAYABLE. THE VENDOR WILL NOT BE PAID FOR EACH SHIPMENT UNTIL WE HAVE RECEIVED YOUR APPROVAL.		

Vendor Instructions:

1. **Show purchase order number on all invoices, shipping papers and correspondence.**
2. **Mail invoice in duplicate Attn: Accounts Payable, at the above address.**
3. **Packing slip must accompany each delivery showing purchase order, catalog number, serial number and description.**
4. **No changes without written authorization from purchasing.**
5. **If freight charges are applicable, prepay and add to invoice. No C.O.D. charges permitted.**
6. **All vendors/manufacturers representatives must send manufacturers safety data sheet (OSHA Form 20 or equivalent) with shipment when applicable.**

SUB TOTAL	$ 5,000.00
SALES TAX	$ 0.00
SHIPPING	$ 0.00
TOTAL	$ 5,000.00

BURBANK UNIFIED SCHOOL DISTRICT

Approved By: Oscar Macias, Ed.D.

"OVERSERVE THE UNDERSERVED"

VENDOR COPY

PURCHASE ORDER

BURBANK UNIFIED SCHOOL DISTRICT

1900 WEST OLIVE AVE, BURBANK, CA 91506-2460
Phone: (818) 729-4400 Fax: (818) 729-4534

PURCHASE ORDER NO.
26000279
Show this number on invoices, packages and correspondence.

VENDOR

P & R PAPER SUPPLY COMPANY
1898 EAST COLTON AVE
P O BOX 590
REDLANDS, CA 92374

Phone: (909) 794-1108 **Fax:** (909) 794-1237

SHIP TO

BURBANK UNIFIED SCHOOL DISTRICT
FACILITIES SERVICES
510 S. SHELTON STREET
BURBANK, CA 91506-2818

For: FOOD SERVICES
S. DUNN

PO Date: 06/16/2025 **Deliver By:** 07/01/2022 **Buyer Name:** Maro Bojolyan

ITEM NO.	QTY ORDERED	UNIT OF ISSUE	DESCRIPTION	UNIT PRICE	AMOUNT
1	1	CO	CHANGE ORDER #1: INCREASE P.O. # 26000279 BY $32,000.00 FOR A REVISED TOTAL OF $212,000.00 DUE TO REACHING LIMIT OF ORIGINAL REQUISITION AMOUNT - NEED TO INCREASE FOR REMAINDER OF SCHOOL YEAR & START TO SUMMER SCHOOL, AS PER R0003353. ********** >>> 2025 - 2026 BLANKET ORDER <<< BLANKET ORDER TO COVER THE COST OF CAFETERIA SUPPLIES AND PAPER GOODS DELIVERY, AND SALES TAX ON TAXABLE ITEMS FOR THE FOOD SERVICE DEPARTMENT ON AN AS NEEDED BASIS PERSONS AUTHORIZED TO ORDER THIS PURCHASE ORDER ARE: RACHEL PAGHUNASAN SUSIE DUNN SHARI BURKHART EFFECTIVE JULY 1, 2025, THROUGH JUNE 30, 2026 NOT TO EXCEED: $180,000.00 INCLUDING TAXES AND SHIPPING PERIOD OF JULY 1, 2025 THROUGH JUNE 30, 2026 *** SPECIAL INSTRUCTIONS ***	32,000.00	32,000.00
2	1	LOT		180,000.00	180,000.00

Vendor Instructions:

1. **Show purchase order number on all invoices, shipping papers and correspondence.**
2. **Mail invoice in duplicate Attn: Accounts Payable, at the above address.**
3. **Packing slip must accompany each delivery showing purchase order, catalog number, serial number and description.**
4. **No changes without written authorization from purchasing.**
5. **If freight charges are applicable, prepay and add to invoice. No C.O.D. charges permitted.**
6. **All vendors/manufacturers representatives must send manufacturers safety data sheet (OSHA Form 20 or equivalent) with shipment when applicable.**

SUB TOTAL	$ 212,000.00
SALES TAX	$ 0.00
SHIPPING	$ 0.00
TOTAL	$ 212,000.00

BURBANK UNIFIED SCHOOL DISTRICT

Approved By: Oscar Macias, Ed.D.

"OVERSERVE THE UNDERSERVED"

VENDOR COPY

PURCHASE ORDER

BURBANK UNIFIED SCHOOL DISTRICT

1900 WEST OLIVE AVE, BURBANK, CA 91506-2460
Phone: (818) 729-4400 Fax: (818) 729-4534

PURCHASE ORDER NO.
26000279
Show this number on invoices, packages and correspondence.

VENDOR

P & R PAPER SUPPLY COMPANY
1898 EAST COLTON AVE
P O BOX 590
REDLANDS, CA 92374

Phone: (909) 794-1108 **Fax:** (909) 794-1237

SHIP TO

BURBANK UNIFIED SCHOOL DISTRICT
FACILITIES SERVICES
510 S. SHELTON STREET
BURBANK, CA 91506-2818

For: FOOD SERVICES
S. DUNN

PO Date: 06/16/2025 **Deliver By:** 07/01/2022 **Buyer Name:** Maro Bojolyan

ITEM NO.	QTY ORDERED	UNIT OF ISSUE	DESCRIPTION	UNIT PRICE	AMOUNT
			* VENDOR: FOR PROMPT PAYMENT, BILL TO: APINVOICES@BURBANKUSD.ORG * PLEASE NOTE: WE ARE NO LONGER ACCEPTING HARD COPY INVOICES SENT BY MAIL * MATERIAL SAFETY DATA SHEETS (MSDS) ARE TO BE PROVIDED AT TIME OF PICKUP OR DELIVERY OF ITEMS SUPPLIED ON THIS PURCHASE ORDER THAT MAY REQUIRE CAUTION IN HANDLING OR USE BY EITHER CHILDREN OR ADULTS. * VENDOR NOTE: PLEASE SHIP DIRECTLY TO OUR SITE AS INDICATED. PLEASE BE SURE TO INCLUDE OUR PURCHASE ORDER NUMBER ON ALL BOXES AND PACKING SLIPS. ALL DELIVERIES WILL BE RECEIVED BETWEEN THE HOURS OF 8:00AM - 4:00PM. * EQUIPMENT ITEMS WITH A VALUE OF $500.00 OR MORE, INCLUDING TAX AND SHIPPING, MAY NOT BE PURCHASED ON THIS BLANKET ORDER AS THEY ARE CONSIDERED FIXED ASSETS BY THE DISTRICT.		

Vendor Instructions:

1. **Show purchase order number on all invoices, shipping papers and correspondence.**
2. **Mail invoice in duplicate Attn: Accounts Payable, at the above address.**
3. **Packing slip must accompany each delivery showing purchase order, catalog number, serial number and description.**
4. **No changes without written authorization from purchasing.**
5. **If freight charges are applicable, prepay and add to invoice. No C.O.D. charges permitted.**
6. **All vendors/manufacturers representatives must send manufacturers safety data sheet (OSHA Form 20 or equivalent) with shipment when applicable.**

SUB TOTAL	$ 212,000.00
SALES TAX	$ 0.00
SHIPPING	$ 0.00
TOTAL	$ 212,000.00

BURBANK UNIFIED SCHOOL DISTRICT

Approved By: Oscar Macias, Ed.D.

"OVERSERVE THE UNDERSERVED"

VENDOR COPY

PURCHASE ORDER

BURBANK UNIFIED SCHOOL DISTRICT

1900 WEST OLIVE AVE, BURBANK, CA 91506-2460
Phone: (818) 729-4400 Fax: (818) 729-4534

PURCHASE ORDER NO.
26000305
Show this number on invoices, packages and correspondence.

VENDOR

OFFICE DEPOT/ BUSINESS SERVICES DIVISION
PO BOX 29248
PHOENIX, AZ 85038-9248

Phone: (888) 263-3423 **Fax:** (888) 251-4058

SHIP TO

BURBANK UNIFIED SCHOOL DISTRICT
DISNEY ELEMENTARY
1220 W. ORANGE GROVE AVE.
BURBANK, CA 91506-2016

For: DISNEY ELEMENTARY
BROOKE SCHWARTZ/DISNEY

PO Date: 06/17/2025 **Deliver By:** 07/01/2025 **Buyer Name:** Terri Harvey

ITEM NO.	QTY ORDERED	UNIT OF ISSUE	DESCRIPTION	UNIT PRICE	AMOUNT
1	1	C/O	CHANGE ORDER #1: INCREASE BY $1,500.00 FOR A REVISED TOTAL OF $3,500.00 AS PER REQ R0003109	1,500.00	1,500.00
			**********		
2	1	LOT	>>> 2025 - 2026 BLANKET ORDER <<< BLANKET ORDER TO COVER THE COST OF SUPPLIES AND MATERIALS, NOT EQUIPMENT, TO BE ORDERED ONLINE ON AN "AS NEEDED" BASIS, EFFECTIVE 7/1/2025 THROUGH 6/30/2026. TOTAL AMOUNT OF THIS ORDER IS NOT TO EXCEED $2000.00 (INCLUDING TAX & SHIPPING) ALL ORDERS TO BE DELIVERED, MONDAY-FRIDAY, 8:00 AM TO 4:00 PM, TO: WALT DISNEY ELEMENTARY ATTN: BROOKE SCHWARTZ 1220 W ORANGE GROVE AVE. BURBANK, CA 91506 NAME@burbankusd.org SITE TO ADHERE TO DISTRICT GUIDELINES FOR MINIMUM ORDER OF $50 AND EVERY OTHER WEEK DELIVERY. SIGNED AND DATED PACKING LISTS TO BE FORWARDED TO ACCOUNTS PAYABLE IN A TIMELY MANNER. IF YOU DO NOT LOCATE A PACKING LIST, PLEASE GO TO THE	2,000.00	2,000.00

Vendor Instructions:

1. **Show purchase order number on all invoices, shipping papers and correspondence.**
2. **Mail invoice in duplicate Attn: Accounts Payable, at the above address.**
3. **Packing slip must accompany each delivery showing purchase order, catalog number, serial number and description.**
4. **No changes without written authorization from purchasing.**
5. **If freight charges are applicable, prepay and add to invoice. No C.O.D. charges permitted.**
6. **All vendors/manufacturers representatives must send manufacturers safety data sheet (OSHA Form 20 or equivalent) with shipment when applicable.**

SUB TOTAL	$ 3,500.00
SALES TAX	$ 0.00
SHIPPING	$ 0.00
TOTAL	$ 3,500.00

BURBANK UNIFIED SCHOOL DISTRICT

Approved By:

VENDOR COPY

PURCHASE ORDER

BURBANK UNIFIED SCHOOL DISTRICT

1900 WEST OLIVE AVE, BURBANK, CA 91506-2460
Phone: (818) 729-4400 Fax: (818) 729-4534

PURCHASE ORDER NO.
26000331
Show this number on invoices, packages and correspondence.

VENDOR
FELLERS INC
6566 EAST SKELLY DRIVE
TULSA, OK 74145-5540

Phone: (888) 863-8383 **Fax:** (918) 621-4444

SHIP TO
BURBANK UNIFIED SCHOOL DISTRICT
WAREHOUSE
510 S. SHELTON ST.
BURBANK, CA 91506-2818

For: WAREHOUSE
Andrea Lamb

PO Date: 06/18/2025 **Deliver By:** 07/01/2025 **Buyer Name:** Maro Bojolyan

ITEM NO.	QTY ORDERED	UNIT OF ISSUE	DESCRIPTION	UNIT PRICE	AMOUNT
1	1	CO	CHANGE ORDER #2: REDUCE P.O. 26000331 BY $100.00 FOR A REVISED TOTAL OF $6,900.00 DUE TO REALLOCATING ENCUMBRANCE TO PO 26000454, AS PER R0003328. **********	-100.00	-100.00
2	1	CO	CHANGE ORDER #1: REDUCE P.O. # 26000331 BY $2,000.00 FOR A REVISED TOTAL OF $7,000.00 DUE TO REDIRTECTING SPEND TO PO 26000443, AS PER REQ R0002618. **********	-2,000.00	-2,000.00
3	1	LOT	>>> 2025 - 2026 BLANKET ORDER <<< BLANKET PO TO COVER THE COST OF PRINT CENTER SUPPLIES TO BE ORDERED ON AN "AS NEEDED" BASIS FROM JULY 1, 2025, THROUGH JUNE 30, 2026. NOT TO EXCEED: $9,000.00 INCLUDING TAXES AND SHIPPING REFERENCE THE P.O. NUMBER ON ALL RECEIPTS, PACKING LISTS AND INVOICES. *** SPECIAL INSTRUCTIONS *** * VENDOR: FOR PROMPT PAYMENT, BILL TO: APINVOICES@BURBANKUSD.ORG * PLEASE NOTE: WE ARE NO LONGER ACCEPTING HARD COPY INVOICES SENT BY MAIL	9,000.00	9,000.00

Vendor Instructions:

1. **Show purchase order number on all invoices, shipping papers and correspondence.**
2. **Mail invoice in duplicate Attn: Accounts Payable, at the above address.**
3. **Packing slip must accompany each delivery showing purchase order, catalog number, serial number and description.**
4. **No changes without written authorization from purchasing.**
5. **If freight charges are applicable, prepay and add to invoice. No C.O.D. charges permitted.**
6. **All vendors/manufacturers representatives must send manufacturers safety data sheet (OSHA Form 20 or equivalent) with shipment when applicable.**

SUB TOTAL	$ 6,900.00
SALES TAX	$ 0.00
SHIPPING	$ 0.00
TOTAL	$ 6,900.00

BURBANK UNIFIED SCHOOL DISTRICT

Approved By: Oscar Macias, Ed.D.
"OVERSERVE THE UNDERSERVED"

VENDOR COPY

PURCHASE ORDER

BURBANK UNIFIED SCHOOL DISTRICT

1900 WEST OLIVE AVE, BURBANK, CA 91506-2460
Phone: (818) 729-4400 Fax: (818) 729-4534

PURCHASE ORDER NO.
26000392
Show this number on invoices, packages and correspondence.

VENDOR

VONK, RICK
7724 SHADY COVE AVENUE
BURBANK, CA 91504

Phone: (818) 421-1900 **Fax:**

SHIP TO

BURBANK UNIFIED SCHOOL DISTRICT
FISCAL SERVICES
1900 WEST OLIVE AVE.
BURBANK, CA 91506-2460

For: FISCAL SERVICES
RETIREE MEDICAL REIMBURSEMENT

PO Date: 07/02/2025 **Deliver By:** 07/01/2025 **Buyer Name:** Terri Harvey

ITEM NO.	QTY ORDERED	UNIT OF ISSUE	DESCRIPTION	UNIT PRICE	AMOUNT
1	1	CO	CHANGE ORDER #1: INCREASE BY $2,213.98 FOR A REVISED TOTAL OF $11,758.98 AS PER REQ R0003164	2,213.98	2,213.98
			**********		
2	1	LOT	2025 - 2026 BLANKET; RETIREE MEDICAL REIMBURSEMENT 12 MONTHS (JULY 2025-JUNE 2026)	9,545.00	9,545.00

Vendor Instructions:

1. **Show purchase order number on all invoices, shipping papers and correspondence.**
2. **Mail invoice in duplicate Attn: Accounts Payable, at the above address.**
3. **Packing slip must accompany each delivery showing purchase order, catalog number, serial number and description.**
4. **No changes without written authorization from purchasing.**
5. **If freight charges are applicable, prepay and add to invoice. No C.O.D. charges permitted.**
6. **All vendors/manufacturers representatives must send manufacturers safety data sheet (OSHA Form 20 or equivalent) with shipment when applicable.**

SUB TOTAL	$ 11,758.98
SALES TAX	$ 0.00
SHIPPING	$ 0.00
TOTAL	$ 11,758.98

BURBANK UNIFIED SCHOOL DISTRICT

Approved By:

VENDOR COPY

PURCHASE ORDER

BURBANK UNIFIED SCHOOL DISTRICT

1900 WEST OLIVE AVE, BURBANK, CA 91506-2460
Phone: (818) 729-4400 Fax: (818) 729-4534

PURCHASE ORDER NO.
26000407
Show this number on invoices, packages and correspondence.

VENDOR

AMAZON CAPITAL SERVICES
PO BOX 035184
SEATTLE, WA 98124-5184

Phone: (206) 435-3958 **Fax:**

SHIP TO

BURBANK UNIFIED SCHOOL DISTRICT
FOOD SERVICES
1900 WEST OLIVE ST.
BURBANK, CA 91506-2460

For: FOOD SERVICES
DUNN/FOOD SERVICES

PO Date: 07/03/2025 **Deliver By:** 07/01/2025 **Buyer Name:** Terri Harvey

ITEM NO.	QTY ORDERED	UNIT OF ISSUE	DESCRIPTION	UNIT PRICE	AMOUNT
1	1	CO	CHANGE ORDER #2: INCREASE P.O. # 26000407 BY $10,000.00 FOR A REVISED TOTAL OF $30,000.00 DUE TO REACHING LIMIT FROM AMAZON BLANKET PO AND NEEDING TO PURCHASE ADDITIONAL ITEMS FOR SCHOOLS AND DISTRICT OFFICE, AS PER R0003293. **********	10,000.00	10,000.00
2	1	CO	CHANGE ORDER #1: INCREASE BY $5000.00 FOR A REVISED TOTAL OF $20000.00 DUE TO NEARLY REACHING LIMIT FROM AMAZON BLANKET PO AND NEED TO PURCHASE ADDITIONAL ITEMS FOR SCHOOLS AND DISTRICT OFFICE, AS PER R0002996. **********	5,000.00	5,000.00
3	1	LOT	>>> 2025 - 2026 BLANKET ORDER <<< BLANKET ORDER TO COVER THE COST OF SUPPLIES AND MATERIALS, NOT EQUIPMENT, TO BE ORDERED ONLINE ON AN "AS NEEDED" BASIS, EFFECTIVE 7/1/2025 THROUGH 6/30/2026. TOTAL AMOUNT OF THIS ORDER IS NOT TO EXCEED $2000.00 (INCLUDING TAX & SHIPPING) ALL ORDERS TO BE DELIVERED, MONDAY-FRIDAY, 8:00 AM TO 4:00 PM, TO FOOD SERVICES ATTN: SUSIE DUNN 1900 W OLIVE AVENUE BURBANK, CA 91506	15,000.00	15,000.00

Vendor Instructions:

1. **Show purchase order number on all invoices, shipping papers and correspondence.**
2. **Mail invoice in duplicate Attn: Accounts Payable, at the above address.**
3. **Packing slip must accompany each delivery showing purchase order, catalog number, serial number and description.**
4. **No changes without written authorization from purchasing.**
5. **If freight charges are applicable, prepay and add to invoice. No C.O.D. charges permitted.**
6. **All vendors/manufacturers representatives must send manufacturers safety data sheet (OSHA Form 20 or equivalent) with shipment when applicable.**

SUB TOTAL	$ 30,000.00
SALES TAX	$ 0.00
SHIPPING	$ 0.00
TOTAL	$ 30,000.00

BURBANK UNIFIED SCHOOL DISTRICT

Approved By: Oscar Macias, Ed.D.

"OVERSERVE THE UNDERSERVED"

VENDOR COPY

PURCHASE ORDER

BURBANK UNIFIED SCHOOL DISTRICT

1900 WEST OLIVE AVE, BURBANK, CA 91506-2460
Phone: (818) 729-4400 Fax: (818) 729-4534

PURCHASE ORDER NO.
26000430
Show this number on invoices, packages and correspondence.

VENDOR

FRONTLINE TECHNOLOGIES
CRS ADVANCED TECHNOLOGY
1400 ATWATER DR
MALVERN, PA 19355-8701

Phone: (800) 782-3463 **Fax:** (570) 651-4595

SHIP TO

BURBANK UNIFIED SCHOOL DISTRICT
PERSONNEL SERVICES
1900 WEST OLIVE ST.
BURBANK, CA 91506-2460

For: PERSONNEL SERVICES
HUMAN RESOURCES SERVICES

PO Date: 07/07/2025 **Deliver By:** 07/01/2025 **Buyer Name:** Terri Harvey

ITEM NO.	QTY ORDERED	UNIT OF ISSUE	DESCRIPTION	UNIT PRICE	AMOUNT
1	1	CO	C/O 1: INCREASE PO BY $3,500.00 FOR A REVISED TOTAL OF $37,708.36 TO COVER COST OF ABSENCE MANAGEMENT TUNE-UP AS PER REQ R0003186 REFERENCE INVOICE #INVUS237049 BOARD APPROVED: 3/26/26 **********	3,500.00	3,500.00
2	1	LOT	ACCESS TO THE AUTOMATED EMPLOYEE ABSENCE MANAGEMENT AND SUBSTITUTE PLACEMENT SYSTEM VIA TELEPHONE AND INTERNET. TOTAL NOT TO EXCEED $34,208.36 THE TERM ON THIS AGREEMENT IS FROM JULY 1, 2025 TO JUNE 30, 2026. ACCOUNT #16201 ********** REFERENCE INVOICE #INVUS226311 BOARD APPROVED ON JUNE 18, 2025	34,208.36	34,208.36

Vendor Instructions:

1. **Show purchase order number on all invoices, shipping papers and correspondence.**
2. **Mail invoice in duplicate Attn: Accounts Payable, at the above address.**
3. **Packing slip must accompany each delivery showing purchase order, catalog number, serial number and description.**
4. **No changes without written authorization from purchasing.**
5. **If freight charges are applicable, prepay and add to invoice. No C.O.D. charges permitted.**
6. **All vendors/manufacturers representatives must send manufacturers safety data sheet (OSHA Form 20 or equivalent) with shipment when applicable.**

Contract Number
ND LICENSES; BOARD APPRC

SUB TOTAL	$ 37,708.36
SALES TAX	$ 0.00
SHIPPING	$ 0.00
TOTAL	$ 37,708.36

BURBANK UNIFIED SCHOOL DISTRICT

Approved By:

VENDOR COPY

PURCHASE ORDER

BURBANK UNIFIED SCHOOL DISTRICT

1900 WEST OLIVE AVE, BURBANK, CA 91506-2460
Phone: (818) 729-4400 Fax: (818) 729-4534

PURCHASE ORDER NO.
26000454
Show this number on invoices, packages and correspondence.

VENDOR

ULINE - Attn: ACCOUNTS RECEIVABLES
PO BOX 88741
CHICAGO, IL 60680-1741

Phone: (800) 295-5510 **Fax:** (800) 295-5571

SHIP TO

BURBANK UNIFIED SCHOOL DISTRICT
WAREHOUSE
510 S. SHELTON ST.
BURBANK, CA 91506-2818

For: WAREHOUSE
ANDREA LAMB

PO Date: 07/11/2025 **Deliver By:** 07/01/2025 **Buyer Name:** Terri Harvey

ITEM NO.	QTY ORDERED	UNIT OF ISSUE	DESCRIPTION	UNIT PRICE	AMOUNT
1	1	CO	CHANGE ORDER #1: INCREASE BY $100.00 FOR A REVISED TOTAL OF $6,100.00 AS PER REQ R0003329	100.00	100.00
			**********		
2	1	LOT	>>> 2025 - 2026 BLANKET ORDER <<< BLANKET PO TO COVER THE COST OF PRINT CENTER SUPPLIES TO BE ORDERED ON AN "AS NEEDED" BASIS FROM JULY 1, 2025, THROUGH JUNE 30, 2026. NOT TO EXCEED: $6,000.00 INCLUDING TAXES AND SHIPPING REFERENCE THE P.O. NUMBER ON ALL RECEIPTS, PACKING LISTS AND INVOICES *** SPECIAL INSTRUCTIONS *** * VENDOR: FOR PROMPT PAYMENT, BILL TO: APINVOICES@BURBANKUSD.ORG * PLEASE NOTE: WE ARE NO LONGER ACCEPTING HARD COPY INVOICES SENT BY MAIL * EQUIPMENT ITEMS WITH A VALUE OF $500.00 OR MORE, INCLUDING TAX AND SHIPPING, MAY NOT BE PURCHASED ON THIS BLANKET ORDER AS THEY ARE CONSIDERED FIXED ASSETS BY THE DISTRICT.	6,000.00	6,000.00

Vendor Instructions:

1. **Show purchase order number on all invoices, shipping papers and correspondence.**
2. **Mail invoice in duplicate Attn: Accounts Payable, at the above address.**
3. **Packing slip must accompany each delivery showing purchase order, catalog number, serial number and description.**
4. **No changes without written authorization from purchasing.**
5. **If freight charges are applicable, prepay and add to invoice. No C.O.D. charges permitted.**
6. **All vendors/manufacturers representatives must send manufacturers safety data sheet (OSHA Form 20 or equivalent) with shipment when applicable.**

SUB TOTAL	$ 6,100.00
SALES TAX	$ 0.00
SHIPPING	$ 0.00
TOTAL	$ 6,100.00

BURBANK UNIFIED SCHOOL DISTRICT

Approved By:

VENDOR COPY

PURCHASE ORDER

BURBANK UNIFIED SCHOOL DISTRICT

1900 WEST OLIVE AVE, BURBANK, CA 91506-2460
Phone: (818) 729-4400 Fax: (818) 729-4534

PURCHASE ORDER NO.
26000483
Show this number on invoices, packages and correspondence.

VENDOR

SOUTHWEST SCHOOL & OFFICE SUPPLY
805 N BARRINGTON AVE
ONTARIO,

Phone: (800) 227-7159 **Fax:** (909) 980-7159

SHIP TO

BURBANK UNIFIED SCHOOL DISTRICT
WASHINGTON CHILDREN´S CENTER
2207 W. WINONA AVE.
BURBANK, CA 91504-2658

For: WASHINGTON CHILDREN´S CENTER
Sarah Gourian/Laura Flosi

PO Date: 07/21/2025 **Deliver By:** 07/01/2025 **Buyer Name:** Maro Bojolyan

ITEM NO.	QTY ORDERED	UNIT OF ISSUE	DESCRIPTION	UNIT PRICE	AMOUNT
1	1	CO	CHANGE ORDER #1: REDUCE BY $240.98 FOR A REVISED TOTAL OF $1,009.02 DUE TO NEEDING TO FREE UP FUNDS IN ORDER TO PURCHASE A TECHNICAL ASSET (SMART TV) ON A NEW REQUISITION FOR THE SCHOOL AGE CLASSROOM AT WASHINGTON CHILDREN'S CENTER, AS PER R0003169.	-240.98	-240.98
			**********		
2	1	LOT	>>> 2025 - 2026 BLANKET ORDER <<< BLANKET ORDER TO COVER THE COST OF SUPPLIES AND MATERIALS, NOT EQUIPMENT, TO BE ORDERED ONLINE ON AN "AS NEEDED" BASIS, EFFECTIVE 7/1/2025 THROUGH 6/30/2026. TOTAL AMOUNT OF THIS ORDER IS NOT TO EXCEED $1250.00 (INCLUDING TAX & SHIPPING) ALL ORDERS TO BE DELIVERED, MONDAY-FRIDAY, 8:00 AM TO 4:00 PM, TO: District Office ATTN: Child Development-Laura Flosi 1900 W Olive Ave BURBANK, CA 91506 SarahGourian@burbankusd.org SITE TO ADHERE TO DISTRICT GUIDELINES FOR MINIMUM ORDER OF $50 AND EVERY OTHER WEEK DELIVERY. SIGNED AND DATED PACKING LISTS TO BE FORWARDED TO ACCOUNTS	1,250.00	1,250.00

Vendor Instructions:

1. **Show purchase order number on all invoices, shipping papers and correspondence.**
2. **Mail invoice in duplicate Attn: Accounts Payable, at the above address.**
3. **Packing slip must accompany each delivery showing purchase order, catalog number, serial number and description.**
4. **No changes without written authorization from purchasing.**
5. **If freight charges are applicable, prepay and add to invoice. No C.O.D. charges permitted.**
6. **All vendors/manufacturers representatives must send manufacturers safety data sheet (OSHA Form 20 or equivalent) with shipment when applicable.**

SUB TOTAL	$ 1,009.02
SALES TAX	$ 0.00
SHIPPING	$ 0.00
TOTAL	$ 1,009.02

BURBANK UNIFIED SCHOOL DISTRICT

Approved By: Oscar Macias, Ed.D.

"OVERSERVE THE UNDERSERVED"

VENDOR COPY

PURCHASE ORDER

BURBANK UNIFIED SCHOOL DISTRICT

1900 WEST OLIVE AVE, BURBANK, CA 91506-2460
Phone: (818) 729-4400 Fax: (818) 729-4534

PURCHASE ORDER NO.
26000642
Show this number on invoices, packages and correspondence.

VENDOR

AMAZON CAPITAL SERVICES
PO BOX 035184
SEATTLE, WA 98124-5184

Phone: (206) 435-3958 **Fax:**

SHIP TO

BURBANK UNIFIED SCHOOL DISTRICT
EMERSON ELEMENTARY
720 E. CYPRESS AVE.
BURBANK, CA 91501-1898

For: EMERSON ELEMENTARY
M. WILLIAMS-BAER

PO Date: 08/07/2025 **Deliver By:** 08/01/2025 **Buyer Name:** Maro Bojolyan

ITEM NO.	QTY ORDERED	UNIT OF ISSUE	DESCRIPTION	UNIT PRICE	AMOUNT
1	1	CO	CHANGE ORDER #3: INCREASE P.O. # 26000642 BY $1,000.00 FOR A REVISED TOTAL OF $7,000.00 DUE TO NEED FOR MORE SUPPLIES, AS PER R0003237. ********** CHANGE ORDER #2: INCREASE BY $2000.00 FOR A REVISED TOTAL OF $6,000.00 DUE TO NEED OF SUPPLIES AS PER R0001381 ********** CHANGE ORDER #1: INCREASE BY $2000.00 FOR A REVISED TOTAL OF $4000.00 AS PER R0000900 TO MAKE ADDITONAL PURCHASES ********** >>> 2025 - 2026 BLANKET ORDER <<< BLANKET ORDER TO COVER THE COST OF SUPPLIES AND MATERIALS, NOT EQUIPMENT, TO BE ORDERED ONLINE ON AN "AS NEEDED" BASIS, EFFECTIVE 7/1/2025 THROUGH 6/30/2026. TOTAL AMOUNT OF THIS ORDER IS NOT TO EXCEED $2,000.00 (INCLUDING TAX & SHIPPING) ALL ORDERS TO BE DELIVERED, MONDAY-FRIDAY, 8:00 AM TO 3:00 PM, TO EMERSON ELEMENTARY ATTN: MAUREEN BAER 720 E CYPRESS AVE	1,000.00 2,000.00 2,000.00 2,000.00	1,000.00 2,000.00 2,000.00 2,000.00

Vendor Instructions:

1. **Show purchase order number on all invoices, shipping papers and correspondence.**
2. **Mail invoice in duplicate Attn: Accounts Payable, at the above address.**
3. **Packing slip must accompany each delivery showing purchase order, catalog number, serial number and description.**
4. **No changes without written authorization from purchasing.**
5. **If freight charges are applicable, prepay and add to invoice. No C.O.D. charges permitted.**
6. **All vendors/manufacturers representatives must send manufacturers safety data sheet (OSHA Form 20 or equivalent) with shipment when applicable.**

SUB TOTAL	$ 7,000.00
SALES TAX	$ 0.00
SHIPPING	$ 0.00
TOTAL	$ 7,000.00

BURBANK UNIFIED SCHOOL DISTRICT

Approved By: Oscar Macias, Ed.D.

"OVERSERVE THE UNDERSERVED"

VENDOR COPY

PURCHASE ORDER

BURBANK UNIFIED SCHOOL DISTRICT

1900 WEST OLIVE AVE, BURBANK, CA 91506-2460
Phone: (818) 729-4400 Fax: (818) 729-4534

PURCHASE ORDER NO.
26000728
Show this number on invoices, packages and correspondence.

VENDOR

SIGN UP INTERPRETING SERVICES, LLC
P.O. BOX 941
SUNSET BEACH, CA 90742

Phone: (657) 464-4192 **Fax:**

SHIP TO

BURBANK UNIFIED SCHOOL DISTRICT
PERSONNEL SERVICES
1900 WEST OLIVE ST.
BURBANK, CA 91506-2460

For: PERSONNEL SERVICES
L. TRAMMEL/HUMAN RESOURCES SERVICES

PO Date: 08/18/2025 **Deliver By:** 08/09/2025 **Buyer Name:** Maro Bojolyan

ITEM NO.	QTY ORDERED	UNIT OF ISSUE	DESCRIPTION	UNIT PRICE	AMOUNT
1	1	CO	CHANGE ORDER #2: INCREASE P.O. # 26000728 BY $30,000.00 FOR A REVISED TOTAL OF $150,000.00 DUE TO THE NEED TO PAY INVOICES FOR SERVICES PROVIDED FOR INTERPRETTING, AS PER R0003286. **********	30,000.00	30,000.00
2	1	CO	CHANGE ORDER #1: INCREASE BY $30,000.00 FOR A REVISED TOTAL OF $120,000.00 DUE TO THE NEED TO PAY INVOICES FOR INTERPRETING SERVICES, AS PER R0002942. **********	30,000.00	30,000.00
3	1	EA	AGREEMENT BETWEEN THE BURBANK UNIFIED SCHOOL DISTRICT AND SIGN UP INTERPRETING, LLC FOR THE FOLLOWING PROFESSIONAL SERVICES: INTERPRETING FOR EMPLOYEES TOTAL NOT TO EXCEED: $90,000.00 THE TERM OF THIS AGREEMENT IS FOR THE PERIOD OF 7/1/2025 THROUGH 6/30/26. BOARD APPROVED: 7/24/2025 ***ALL TERMS AND CONDITIONS OF THE AGREEMENT/BID APPLY TO THIS PURCHASE ORDER. BILL TO:	90,000.00	90,000.00

Vendor Instructions:

1. **Show purchase order number on all invoices, shipping papers and correspondence.**
2. **Mail invoice in duplicate Attn: Accounts Payable, at the above address.**
3. **Packing slip must accompany each delivery showing purchase order, catalog number, serial number and description.**
4. **No changes without written authorization from purchasing.**
5. **If freight charges are applicable, prepay and add to invoice. No C.O.D. charges permitted.**
6. **All vendors/manufacturers representatives must send manufacturers safety data sheet (OSHA Form 20 or equivalent) with shipment when applicable.**

Contract Number
BOARD APPROVED 7/24/2025

SUB TOTAL	$ 150,000.00
SALES TAX	$ 0.00
SHIPPING	$ 0.00
TOTAL	$ 150,000.00

BURBANK UNIFIED SCHOOL DISTRICT

Approved By: Oscar Macias, Ed.D.

"OVERSERVE THE UNDERSERVED"

VENDOR COPY

PURCHASE ORDER

BURBANK UNIFIED SCHOOL DISTRICT

1900 WEST OLIVE AVE, BURBANK, CA 91506-2460
Phone: (818) 729-4400 Fax: (818) 729-4534

PURCHASE ORDER NO.
26001151
Show this number on invoices, packages and correspondence.

VENDOR

AMAZON CAPITAL SERVICES
PO BOX 035184
SEATTLE, WA 98124-5184

Phone: (206) 435-3958 **Fax:**

SHIP TO

BURBANK UNIFIED SCHOOL DISTRICT
DISNEY ELEMENTARY
1220 W. ORANGE GROVE AVE.
BURBANK, CA 91506-2016

For: DISNEY ELEMENTARY
B. SCHWARTZ/DISNEY

PO Date: 09/26/2025 **Deliver By:** 09/26/2025 **Buyer Name:** Maro Bojolyan

ITEM NO.	QTY ORDERED	UNIT OF ISSUE	DESCRIPTION	UNIT PRICE	AMOUNT
1	1	CO	CHANGE ORDER #1: INCREASE BY $2000.00 FOR A REVISED TOTAL OF $3000.00 DUE TO AVAILABLE FUNDS, AS PER R0003111. **********	2,000.00	2,000.00
2	1	LOT	>>> 2025 - 2026 BLANKET ORDER <<< BLANKET ORDER TO COVER THE COST OF SUPPLIES AND MATERIALS, NOT EQUIPMENT, TO BE ORDERED ONLINE ON AN "AS NEEDED" BASIS, EFFECTIVE 7/1/2025 THROUGH 6/30/2026. TOTAL AMOUNT OF THIS ORDER IS NOT TO EXCEED $1,000 (INCLUDING TAX & SHIPPING) ALL ORDERS TO BE DELIVERED, MONDAY-FRIDAY, 8:00 AM TO 3:00 PM, TO WALT DISNEY ELEMENTARY ATTN: BROOKE SCHWARTZ 1220 W ORANGE GROVE AVE BURBANK, CA 91506 INSTRUCTIONS TO AMAZON USER: SELECT BLANKET PO 26001151 WHEN CHECKING OUT A CART ON AMAZON. UPON RECEIPT OF THE ORDER, NOTE RECEIPT OF ALL ITEMS IN YOUR AMAZON ACCOUNT AND SNED A BUDGET TRANSFER REQUEST SHOULD YOU NEED TO CHARGE THIS ORDER TO A DIFFERENT EXPENSE ACCOUNT.	1,000.00	1,000.00

Vendor Instructions:

1. **Show purchase order number on all invoices, shipping papers and correspondence.**
2. **Mail invoice in duplicate Attn: Accounts Payable, at the above address.**
3. **Packing slip must accompany each delivery showing purchase order, catalog number, serial number and description.**
4. **No changes without written authorization from purchasing.**
5. **If freight charges are applicable, prepay and add to invoice. No C.O.D. charges permitted.**
6. **All vendors/manufacturers representatives must send manufacturers safety data sheet (OSHA Form 20 or equivalent) with shipment when applicable.**

SUB TOTAL	$ 3,000.00
SALES TAX	$ 0.00
SHIPPING	$ 0.00
TOTAL	$ 3,000.00

BURBANK UNIFIED SCHOOL DISTRICT

Approved By: Oscar Macias, Ed.D.

"OVERSERVE THE UNDERSERVED"

VENDOR COPY

PURCHASE ORDER

BURBANK UNIFIED SCHOOL DISTRICT

1900 WEST OLIVE AVE, BURBANK, CA 91506-2460
Phone: (818) 729-4400 Fax: (818) 729-4534

PURCHASE ORDER NO.
26001190
Show this number on invoices, packages and correspondence.

VENDOR

AMAZON CAPITAL SERVICES
PO BOX 035184
SEATTLE, WA 98124-5184

Phone: (206) 435-3958 **Fax:**

SHIP TO

BURBANK UNIFIED SCHOOL DISTRICT
EMERSON ELEMENTARY
720 E. CYPRESS AVE.
BURBANK, CA 91501-1898

For: EMERSON ELEMENTARY
MAUREEN/PROP 28 SUPPLIES

PO Date: 10/02/2025 **Deliver By:** 10/02/2025 **Buyer Name:** Maro Bojolyan

ITEM NO.	QTY ORDERED	UNIT OF ISSUE	DESCRIPTION	UNIT PRICE	AMOUNT
1	1	CO	CHANGE ORDER #3: INCREASE P.O. #26001190 BY $500.00 FOR A REVISED TOTAL OF $4,500.00 DUE TO A NEED FOR MORE SUPPLIES, AS PER R0003324. **********	500.00	500.00
2	1	CO	CHANGE ORDER #2: INCREASE BY $1,000.00 FOR A REVISED TOTAL OF $4,000.00 DUE TO NEEDING MORE SUPPLIES AS PER R0001753. **********	1,000.00	1,000.00
3	1	CO	CHANGE ORDER #1: INCREASE BY $1000.00 FOR A REVISED TOTAL OF $3000.00 DUE TO NEEDING MORE SEUSSICAL MUSICAL ITEMS AS PER R0001591. **********	1,000.00	1,000.00
4	1	LOT	>>> 2025 - 2026 BLANKET ORDER <<< BLANKET ORDER TO COVER THE COST OF SUPPLIES AND MATERIALS, NOT EQUIPMENT, TO BE ORDERED ONLINE ON AN "AS NEEDED" BASIS, EFFECTIVE 7/1/2025 THROUGH 6/30/2026. TOTAL AMOUNT OF THIS ORDER IS NOT TO EXCEED $2,000.00 (INCLUDING TAX & SHIPPING) ALL ORDERS TO BE DELIVERED, MONDAY-FRIDAY, 8:00 AM TO 3:00 PM, TO EMERSON ELEMENTARY ATTN: MAUREEN BAER 720 E CYPRESS AVE	2,000.00	2,000.00

Vendor Instructions:

1. **Show purchase order number on all invoices, shipping papers and correspondence.**
2. **Mail invoice in duplicate Attn: Accounts Payable, at the above address.**
3. **Packing slip must accompany each delivery showing purchase order, catalog number, serial number and description.**
4. **No changes without written authorization from purchasing.**
5. **If freight charges are applicable, prepay and add to invoice. No C.O.D. charges permitted.**
6. **All vendors/manufacturers representatives must send manufacturers safety data sheet (OSHA Form 20 or equivalent) with shipment when applicable.**

SUB TOTAL	$ 4,500.00
SALES TAX	$ 0.00
SHIPPING	$ 0.00
TOTAL	$ 4,500.00

BURBANK UNIFIED SCHOOL DISTRICT

Approved By: Oscar Macias, Ed.D.

"OVERSERVE THE UNDERSERVED"

VENDOR COPY

PURCHASE ORDER

BURBANK UNIFIED SCHOOL DISTRICT

1900 WEST OLIVE AVE, BURBANK, CA 91506-2460
Phone: (818) 729-4400 Fax: (818) 729-4534

PURCHASE ORDER NO.
26001222
Show this number on invoices, packages and correspondence.

VENDOR

AMAZON CAPITAL SERVICES
PO BOX 035184
SEATTLE, WA 98124-5184

Phone: (206) 435-3958 **Fax:**

SHIP TO

BURBANK UNIFIED SCHOOL DISTRICT
DISNEY ELEMENTARY
1220 W. ORANGE GROVE AVE.
BURBANK, CA 91506-2016

For: DISNEY ELEMENTARY
B. SCHWARTZ/DISNEY

PO Date: 10/06/2025 **Deliver By:** 10/06/2025 **Buyer Name:** Maro Bojolyan

ITEM NO.	QTY ORDERED	UNIT OF ISSUE	DESCRIPTION	UNIT PRICE	AMOUNT
1	1	CO	CHANGE ORDER #1: INCREASE P.O. # 26001222 BY $1,000.00 FOR A REVISED TOTAL OF $1,300.00 DUE TO SCHOOL NEEDS, AS PER R0003342. **********	1,000.00	1,000.00
2	1	LOT	>>> 2025 - 2026 BLANKET ORDER <<< BLANKET ORDER TO COVER THE COST OF SUPPLIES AND MATERIALS, NOT EQUIPMENT, TO BE ORDERED ONLINE ON AN "AS NEEDED" BASIS, EFFECTIVE 7/1/2025 THROUGH 6/30/2026. TOTAL AMOUNT OF THIS ORDER IS NOT TO EXCEED $200.00 (INCLUDING TAX & SHIPPING) ALL ORDERS TO BE DELIVERED, MONDAY-FRIDAY, 8:00 AM TO 3:00 PM, TO WALT DISNEY ELEMENTARY ATTN: BROOKE SCHWARTZ 1220 WEST ORANGE GROVE AVE BURBANK, CA 91506 INSTRUCTIONS TO AMAZON USER: SELECT BLANKET PO 26001222 WHEN CHECKING OUT A CART ON AMAZON. UPON RECEIPT OF THE ORDER, NOTE RECEIPT OF ALL ITEMS IN YOUR AMAZON ACCOUNT AND SNED A BUDGET TRANSFER REQUEST SHOULD YOU NEED TO CHARGE THIS ORDER TO A DIFFERENT EXPENSE ACCOUNT.	300.00	300.00

Vendor Instructions:

1. **Show purchase order number on all invoices, shipping papers and correspondence.**
2. **Mail invoice in duplicate Attn: Accounts Payable, at the above address.**
3. **Packing slip must accompany each delivery showing purchase order, catalog number, serial number and description.**
4. **No changes without written authorization from purchasing.**
5. **If freight charges are applicable, prepay and add to invoice. No C.O.D. charges permitted.**
6. **All vendors/manufacturers representatives must send manufacturers safety data sheet (OSHA Form 20 or equivalent) with shipment when applicable.**

SUB TOTAL	$ 1,300.00
SALES TAX	$ 0.00
SHIPPING	$ 0.00
TOTAL	$ 1,300.00

BURBANK UNIFIED SCHOOL DISTRICT

Approved By: Oscar Macias, Ed.D.
"OVERSERVE THE UNDERSERVED"

VENDOR COPY

PURCHASE ORDER

BURBANK UNIFIED SCHOOL DISTRICT

1900 WEST OLIVE AVE, BURBANK, CA 91506-2460
Phone: (818) 729-4400 Fax: (818) 729-4534

PURCHASE ORDER NO.
26001314
Show this number on invoices, packages and correspondence.

VENDOR

AMAZON CAPITAL SERVICES
PO BOX 035184
SEATTLE, WA 98124-5184

Phone: (206) 435-3958 **Fax:**

SHIP TO

BURBANK UNIFIED SCHOOL DISTRICT
LUTHER BURBANK MIDDLE SCHOOL
3700 W. JEFFRIES AVE.
BURBANK, CA 91505-1896

For: LUTHER BURBANK MIDDLE SCHOOL
SAL J.

PO Date: 10/13/2025 **Deliver By:** 10/13/2025 **Buyer Name:** Maro Bojolyan

ITEM NO.	QTY ORDERED	UNIT OF ISSUE	DESCRIPTION	UNIT PRICE	AMOUNT
1	1	CO	CHANGE ORDER #2: INCREASE P.O. # 26001314 BY $2670.00 FOR A REVISED TOTAL OF $9,170.00 DUE TO INCREASE IN SCHOOL DEPT USE OF AMAZON, AS PER R0003275. **********	2,670.00	2,670.00
2	1	CO	CHANGE ORDER #1: INCREASE P.O. # 26001314 BY $4000.00 FOR A REVISED TOTAL OF $6500.00 DUE TO INCREASE IN DEPT ORDERS FOR THE 2025/26 SCHOOL YEAR FROM AMAZON AS PREFERRED VENDOR, AS PER R0002677. **********	4,000.00	4,000.00
3	1	LOT	>>> 2025 - 2026 BLANKET ORDER <<< BLANKET ORDER TO COVER THE COST OF SUPPLIES AND MATERIALS, NOT EQUIPMENT, TO BE ORDERED ONLINE ON AN "AS NEEDED" BASIS, EFFECTIVE 7/1/2025 THROUGH 6/30/2026. TOTAL AMOUNT OF THIS ORDER IS NOT TO EXCEED $2500.00 (INCLUDING TAX & SHIPPING) ALL ORDERS TO BE DELIVERED, MONDAY-FRIDAY, 8:00 AM TO 4:00 PM, TO LUTHER BURBANK MIDDLE SCHOOL ATTN: SAL JIMENEZ 3700 WEST JEFFRIES AVE BURBANK, CA 91505	2,500.00	2,500.00

Vendor Instructions:

1. **Show purchase order number on all invoices, shipping papers and correspondence.**
2. **Mail invoice in duplicate Attn: Accounts Payable, at the above address.**
3. **Packing slip must accompany each delivery showing purchase order, catalog number, serial number and description.**
4. **No changes without written authorization from purchasing.**
5. **If freight charges are applicable, prepay and add to invoice. No C.O.D. charges permitted.**
6. **All vendors/manufacturers representatives must send manufacturers safety data sheet (OSHA Form 20 or equivalent) with shipment when applicable.**

SUB TOTAL	$ 9,170.00
SALES TAX	$ 0.00
SHIPPING	$ 0.00
TOTAL	$ 9,170.00

BURBANK UNIFIED SCHOOL DISTRICT

Approved By: Oscar Macias, Ed.D.

"OVERSERVE THE UNDERSERVED"

VENDOR COPY

PURCHASE ORDER

BURBANK UNIFIED SCHOOL DISTRICT

1900 WEST OLIVE AVE, BURBANK, CA 91506-2460
Phone: (818) 729-4400 Fax: (818) 729-4534

PURCHASE ORDER NO.
26001359
Show this number on invoices, packages and correspondence.

VENDOR

AMAZON CAPITAL SERVICES
PO BOX 035184
SEATTLE, WA 98124-5184

Phone: (206) 435-3958 **Fax:**

SHIP TO

BURBANK UNIFIED SCHOOL DISTRICT
JEFFERSON ELEMENTARY
1900 N. SIXTH ST.
BURBANK, CA 91504-2999

For: JEFFERSON ELEMENTARY
Y. DIAZ/Ron Young - Principal JFC

PO Date: 10/20/2025 **Deliver By:** 10/20/2025 **Buyer Name:** Maro Bojolyan

ITEM NO.	QTY ORDERED	UNIT OF ISSUE	DESCRIPTION	UNIT PRICE	AMOUNT
1	1	CO	CHANGE ORDER #2: INCREASE BY $2,200.00 FOR A REVISED TOTAL OF $10,200.00 DUE TO MORE FUNDS NEEDED TO PURCHASE MATERIAL AND SUPPLIES, AS PER R0003174. **********	2,200.00	2,200.00
2	1	CO	CHANGE ORDER #1: INCREASE BY $3,000.00 FOR A REVISED TOTAL OF $8,000.00 DUE TO MORE FUNDS NEEDED TO PURCHASE CLASSROOM SUPPLIES AND MATERIALS, AS PER R0002826. **********	3,000.00	3,000.00
3	1	LOT	>>> 2025 - 2026 BLANKET ORDER <<< BLANKET ORDER TO COVER THE COST OF SUPPLIES AND MATERIALS, NOT EQUIPMENT, TO BE ORDERED ONLINE ON AN "AS NEEDED" BASIS, EFFECTIVE 7/1/2025 THROUGH 6/30/2026 TOTAL AMOUNT OF THIS ORDER IS NOT TO EXCEED $5,000.00 (INCLUDING TAX & SHIPPING) ALL ORDERS TO BE DELIVERED, MONDAY-FRIDAY, 8:00 AM TO 3:00 PM, TO JEFFERSON ELEMENTARY 1900 NORTH SIXTH STREET BURBANK, CA 91504 ATTN: YAYA	5,000.00	5,000.00

Vendor Instructions:

1. **Show purchase order number on all invoices, shipping papers and correspondence.**
2. **Mail invoice in duplicate Attn: Accounts Payable, at the above address.**
3. **Packing slip must accompany each delivery showing purchase order, catalog number, serial number and description.**
4. **No changes without written authorization from purchasing.**
5. **If freight charges are applicable, prepay and add to invoice. No C.O.D. charges permitted.**
6. **All vendors/manufacturers representatives must send manufacturers safety data sheet (OSHA Form 20 or equivalent) with shipment when applicable.**

SUB TOTAL	$ 10,200.00
SALES TAX	$ 0.00
SHIPPING	$ 0.00
TOTAL	$ 10,200.00

BURBANK UNIFIED SCHOOL DISTRICT

Approved By: Oscar Macias, Ed.D.

"OVERSERVE THE UNDERSERVED"

VENDOR COPY

PURCHASE ORDER

BURBANK UNIFIED SCHOOL DISTRICT

1900 WEST OLIVE AVE, BURBANK, CA 91506-2460
Phone: (818) 729-4400 Fax: (818) 729-4534

PURCHASE ORDER NO.
26001401
Show this number on invoices, packages and correspondence.

VENDOR

AMAZON CAPITAL SERVICES
PO BOX 035184
SEATTLE, WA 98124-5184

Phone: (206) 435-3958 **Fax:**

SHIP TO

BURBANK UNIFIED SCHOOL DISTRICT
WASHINGTON ELEMENTARY
2322 N. LINCOLN ST.
BURBANK, CA 91504-2625

For: WASHINGTON ELEMENTARY
L. ZAVALA/LAURA VINYARD TITLE I AMAZON BOC

PO Date: 10/23/2025 **Deliver By:** 10/23/2025 **Buyer Name:** Maro Bojolyan

ITEM NO.	QTY ORDERED	UNIT OF ISSUE	DESCRIPTION	UNIT PRICE	AMOUNT
1	1	CO	CHANGE ORDER #2: INCREASE BY $300 FOR A REVISED TOTAL OF $1,112.00 DUE TO THE NEED TO ORDER MORE SUPPLIES, AS PER R0003156. **********	300.00	300.00
2	1	CO	CHANGE ORDER #1: INCREASE BY $250.00 FOR A REVISED TOTAL OF $812.00 DUE TO THE NEED TO PURCHASE MORE ITEMS, AS PER R0002322. **********	250.00	250.00
3	1	LOT	>>> 2025 - 2026 BLANKET ORDER <<< BLANKET ORDER TO COVER THE COST OF SUPPLIES, MATERIALS AND BOOKS, NOT EQUIPMENT, TO BE ORDERED ONLINE ON AN "AS NEEDED" BASIS, EFFECTIVE 7/1/2025 THROUGH 6/30/2026. TOTAL AMOUNT OF THIS ORDER IS NOT TO EXCEED $562.00 (INCLUDING TAX & SHIPPING) ALL ORDERS TO BE DELIVERED, MONDAY-FRIDAY, 8:00 AM TO 3:00 PM, TO (GEORGE WASHINGTON ELEMENTARY) ATTN: (LAURA VINYARD/LISA ZAVALA) (2322 N. LINCOLN ST.) BURBANK, CA 91504 INSTRUCTIONS TO AMAZON USER:	562.00	562.00

Vendor Instructions:

1. **Show purchase order number on all invoices, shipping papers and correspondence.**
2. **Mail invoice in duplicate Attn: Accounts Payable, at the above address.**
3. **Packing slip must accompany each delivery showing purchase order, catalog number, serial number and description.**
4. **No changes without written authorization from purchasing.**
5. **If freight charges are applicable, prepay and add to invoice. No C.O.D. charges permitted.**
6. **All vendors/manufacturers representatives must send manufacturers safety data sheet (OSHA Form 20 or equivalent) with shipment when applicable.**

SUB TOTAL	$ 1,112.00
SALES TAX	$ 0.00
SHIPPING	$ 0.00
TOTAL	$ 1,112.00

BURBANK UNIFIED SCHOOL DISTRICT

Approved By: Oscar Macias, Ed.D.

"OVERSERVE THE UNDERSERVED"

VENDOR COPY

PURCHASE ORDER

BURBANK UNIFIED SCHOOL DISTRICT

1900 WEST OLIVE AVE, BURBANK, CA 91506-2460
Phone: (818) 729-4400 Fax: (818) 729-4534

PURCHASE ORDER NO.
26001422
Show this number on invoices, packages and correspondence.

CLASS LEASING LLC

Vendor# 401565

VENDOR

CLASS LEASING LLC
1651 S JUANITA ST
SAN JACINTO, CA 92583

Phone: (951) 943-1908 **Fax:** (951) 943-5768

SHIP TO

BURBANK UNIFIED SCHOOL DISTRICT
BURBANK ADULT SCHOOL
3811 W. ALLAN AVE.
BURBANK, CA 91505-1897

For: FACILITIES SERVICES
COZAKOS/SHOKOUHI/NOGUERA

PO Date: 10/27/2025 **Requested Delivery:** 12/31/2025 **Buyer Name:** David Gerharter **Req#** R0001610

ITEM NO.	QTY ORDERED	UNIT OF ISSUE	DESCRIPTION	UNIT PRICE	AMOUNT
1	1	CO	CHANGE ORDER #1; INCREASE BY $2,612.00 FOR A REVISED TOTAL OF $250,642.00 AS PER REQ R0003311 ADDED PLUMBING WALL, CASEWORK BLOCKING, AND 110V OUTLETS AS PER APPROVED CHANGE ORDER #1 **********	2,612.00	2,612.00
2	1	LOT	2526-009: RELOCATABLE CLASSROOMS FOR BURBANK ADULT SCHOOL CONTRACTED UNDER THE TERMS OF GONZALEZ UNIFIED SCHOOL DISTRICT CONTRACT 01-2023 INCLUDES THE FOLLOWING: (2) 24' x 40' New Classrooms (2) Ramps: 5' x 7' Landing with 11' x 4' Ramp Delivery and Installation, Includes: Buildings, HVT Seam, and Ramps Permits / Project Management Engineering / DSA Approvals ********** REFERENCE PROPOSAL DATED 6/10/25 BOARD APPROVED 10/9/25 *** SPECIAL INSTRUCTIONS *** **IMPORTANT NOTICE** TO ALL BURBANK UNIFIED SCHOOL DISTRICT CONTRACTORS AND SERVICE REPAIR COMPANIES: EFFECTIVE JANUARY 1, 2015: The Burbank Unified School District is	248,030.00	248,030.00

ACCOUNT NUMBER	AMOUNT
110-63910-0-41104-85000-6237-533-0000-0000	$250,642.00

Contract Number
2526-009
Public Works

SUB TOTAL	$ 250,642.00
SALES TAX	$ 0.00
SHIPPING	$ 0.00
TOTAL	$ 250,642.00

(A)	SHIPMENT	DATE
(B)	SHIPMENT	DATE
(C)	SHIPMENT	DATE
(D)	SHIPMENT	DATE
(E)	SHIPMENT	DATE

BURBANK UNIFIED SCHOOL DISTRICT

Approved By:

PURCHASING COPY

PURCHASE ORDER

BURBANK UNIFIED SCHOOL DISTRICT

1900 WEST OLIVE AVE, BURBANK, CA 91506-2460
Phone: (818) 729-4400 Fax: (818) 729-4534

PURCHASE ORDER NO.
26001453
Show this number on invoices, packages and correspondence.

VENDOR

JPMORGAN CHASE BANK
NATIONAL ASSOCIATION
1111 POLARIS PARKWAY
COLUMBUS, OH 43240

Phone: **Fax:** (818)

SHIP TO

BURBANK UNIFIED SCHOOL DISTRICT
CHILD DEVELOPMENT SERVICES
1900 WEST OLIVE AVE.
BURBANK, CA 91506-2460

For: CHILD DEVELOPMENT SERVICES
TRONCOSO / FLOSI / ATB

PO Date: 10/29/2025 **Deliver By:** 10/19/2025 **Buyer Name:** David Gerharter

ITEM NO.	QTY ORDERED	UNIT OF ISSUE	DESCRIPTION	UNIT PRICE	AMOUNT
1	1	CO	CHANGE ORDER #1: INCREASE P.O. # 26001453 BY $5000.00 FOR A REVISED TOTAL OF $20000.00 DUE TO THE NEED TO CONTINUE PURCHASING MATERIALS FOR ATB PROGRAM, AS PER R0003265. ********** >>> 2025 - 2026 BLANKET ORDER <<< BLANKET ORDER TO COVER THE COST OF CREDIT CARD PURCHASES FOR ATB PERSONS AUTHORIZED TO ORDER FROM THIS PURCHASE ORDER ARE: _LAURA FLOSI _JANETTE TRONCOSO EFFECTIVE JULY 1, 2025 THROUGH JUNE 30, 2026 NOT TO EXCEED: $15,000.00 INCLUDING TAXES AND SHIPPING	5,000.00	5,000.00
2	1	LOT		15,000.00	15,000.00

Vendor Instructions:

1. **Show purchase order number on all invoices, shipping papers and correspondence.**
2. **Mail invoice in duplicate Attn: Accounts Payable, at the above address.**
3. **Packing slip must accompany each delivery showing purchase order, catalog number, serial number and description.**
4. **No changes without written authorization from purchasing.**
5. **If freight charges are applicable, prepay and add to invoice. No C.O.D. charges permitted.**
6. **All vendors/manufacturers representatives must send manufacturers safety data sheet (OSHA Form 20 or equivalent) with shipment when applicable.**

SUB TOTAL	$ 20,000.00
SALES TAX	$ 0.00
SHIPPING	$ 0.00
TOTAL	$ 20,000.00

BURBANK UNIFIED SCHOOL DISTRICT

Approved By: Oscar Macias, Ed.D.

"OVERSERVE THE UNDERSERVED"

VENDOR COPY

PURCHASE ORDER

BURBANK UNIFIED SCHOOL DISTRICT

1900 WEST OLIVE AVE, BURBANK, CA 91506-2460
Phone: (818) 729-4400 Fax: (818) 729-4534

PURCHASE ORDER NO.
26001475
Show this number on invoices, packages and correspondence.

VENDOR

AMAZON CAPITAL SERVICES
PO BOX 035184
SEATTLE, WA 98124-5184

Phone: (206) 435-3958 **Fax:**

SHIP TO

BURBANK UNIFIED SCHOOL DISTRICT
EMERSON ELEMENTARY
720 E. CYPRESS AVE.
BURBANK, CA 91501-1898

For: EMERSON ELEMENTARY
MAUREEN/AMAZON BLANKET FOR FC FUNDS

PO Date: 10/31/2025 **Deliver By:** 10/31/2025 **Buyer Name:** Maro Bojolyan

ITEM NO.	QTY ORDERED	UNIT OF ISSUE	DESCRIPTION	UNIT PRICE	AMOUNT
1	1	CO	CHANGE ORDER #2: INCREASE P.O. # 26001475 BY $1000.00 FOR A REVISED TOTAL OF $4,000.00 DUE TO NEED FOR MORE SUPPLES, AS PER R0003290. ********** CHANGE ORDER #1: INCREASE BY $2000.00 FOR A REVISED TOTAL OF $3,000.00 DUE TO NEEDING TO PURCHASE ITEMS FOR EMERSON, AS PER R0002268. ********** >>> 2025 - 2026 BLANKET ORDER <<< BLANKET ORDER TO COVER THE COST OF SUPPLIES AND MATERIALS, NOT EQUIPMENT, TO BE ORDERED ONLINE ON AN "AS NEEDED" BASIS, EFFECTIVE 10/30/2025 THROUGH 6/30/2026. TOTAL AMOUNT OF THIS ORDER IS NOT TO EXCEED $1,000.00 (INCLUDING TAX & SHIPPING) ALL ORDERS TO BE DELIVERED, MONDAY-FRIDAY, 8:00 AM TO 3:00 PM, TO EMERSON ATTN: MAUREEN BAER 720 E. CYPRESS AVE BURBANK, CA 91501 INSTRUCTIONS TO AMAZON USER:	1,000.00	1,000.00
2	1	CO		2,000.00	2,000.00
3	1	LOT		1,000.00	1,000.00

Vendor Instructions:

1. **Show purchase order number on all invoices, shipping papers and correspondence.**
2. **Mail invoice in duplicate Attn: Accounts Payable, at the above address.**
3. **Packing slip must accompany each delivery showing purchase order, catalog number, serial number and description.**
4. **No changes without written authorization from purchasing.**
5. **If freight charges are applicable, prepay and add to invoice. No C.O.D. charges permitted.**
6. **All vendors/manufacturers representatives must send manufacturers safety data sheet (OSHA Form 20 or equivalent) with shipment when applicable.**

SUB TOTAL	$ 4,000.00
SALES TAX	$ 0.00
SHIPPING	$ 0.00
TOTAL	$ 4,000.00

BURBANK UNIFIED SCHOOL DISTRICT

Approved By: Oscar Macias, Ed.D.

"OVERSERVE THE UNDERSERVED"

VENDOR COPY

PURCHASE ORDER

BURBANK UNIFIED SCHOOL DISTRICT

1900 WEST OLIVE AVE, BURBANK, CA 91506-2460
Phone: (818) 729-4400 Fax: (818) 729-4534

PURCHASE ORDER NO.
26001575
Show this number on invoices, packages and correspondence.

FLEWELLING & MOODY INC

Vendor# 404262

VENDOR

FLEWELLING & MOODY INC
99 SOUTH LAKE AVE., SUITE 300
PASADENA, CA 91101

Phone: (323) 543-8300 **Fax:** (323) 543-8198

SHIP TO

BURBANK UNIFIED SCHOOL DISTRICT
BURBANK HIGH SCHOOL
902 N. THIRD ST.
BURBANK, CA 91502-1091

For: FACILITIES SERVICES
COZAKOS / RICKMAN

PO Date: 11/14/2025 **Requested Delivery:** 06/30/2026 **Buyer Name:** David Gerharter **Req#** R0001748

ITEM NO.	QTY ORDERED	UNIT OF ISSUE	DESCRIPTION	UNIT PRICE	AMOUNT
1	1	CO	CHANGE ORDER #4: INCREASE BY $29,628.00 FOR A REVISED TOTAL OF $118,908.57 AS PER REQUISITION R0003310 TO PROVIDE FOR ADDITIONAL DESIGN REVISIONS NOT IN THE ORIGINAL SCOPE OF WORK TOTAL CONTRACT VALUE: $425,195.04 BOARD APPROVED MARCH 26, 2026 **********	29,628.00	29,628.00
2	1	LOT	>>> CARYOVER FOR PO 25000787 <<< TOTAL AMOUNT BOARD APPROVED: $395,567.04 TOTAL EXPENDITURES: $306,286.47 TOTAL REMAINING ENCUMBRANCE: $89,280.57 ********** RFP 2122-003 AGREEMENT BETWEEN THE BURBANK UNIFIED SCHOOL DISTRICT AND FLEWELLING & MOODY FOR THE FOLLOWING PROFESSIONAL SERVICES: ARCHITECURAL DESIGN SERVICES FOR THE AQUATICS CENTER MODERNIZATION RFP 2122-003 AT BURBANK HIGH SCHOOL TOTAL NOT TO EXCEED: $395,567.04	89,280.57	89,280.57

ACCOUNT NUMBER	AMOUNT
400-90329-0-00000-85000-6205-431-0000-0000	$118,908.57

Professional Services

SUB TOTAL	$ 118,908.57
SALES TAX	$ 0.00
SHIPPING	$ 0.00
TOTAL	$ 118,908.57

(A)	SHIPMENT	DATE
(B)	SHIPMENT	DATE
(C)	SHIPMENT	DATE
(D)	SHIPMENT	DATE
(E)	SHIPMENT	DATE

BURBANK UNIFIED SCHOOL DISTRICT

Approved By:

PURCHASING COPY

PURCHASE ORDER

BURBANK UNIFIED SCHOOL DISTRICT

1900 WEST OLIVE AVE, BURBANK, CA 91506-2460
Phone: (818) 729-4400 Fax: (818) 729-4534

PURCHASE ORDER NO.
26001662
Show this number on invoices, packages and correspondence.

VENDOR

AMAZON CAPITAL SERVICES
PO BOX 035184
SEATTLE, WA 98124-5184

Phone: (206) 435-3958 **Fax:**

SHIP TO

BURBANK UNIFIED SCHOOL DISTRICT
WASHINGTON ELEMENTARY
2322 N. LINCOLN ST.
BURBANK, CA 91504-2625

For: WASHINGTON ELEMENTARY
C. DOOMANIS/CD/Vinyard - T1 Supplies Blanket

PO Date: 11/21/2025 **Deliver By:** 11/21/2025 **Buyer Name:** Maro Bojolyan

ITEM NO.	QTY ORDERED	UNIT OF ISSUE	DESCRIPTION	UNIT PRICE	AMOUNT
1	1	CO	CHANGE ORDER #2: INCREASE BY $2500.00 FOR A REVISED TOTAL OF $5000.00 DUE TO INCREASE FOR ADDITIONAL SUPPLY PURCHASES, AS PER R0003151. **********	2,500.00	2,500.00
2	1	CO	CHANGE ORDER #1: INCREASE BY $1500.00 FOR A REVISED TOTAL OF $2500.00 DUE TO NEED TO ORDER MORE PRODUCTS, AS PER R0002713. **********	1,500.00	1,500.00
3	1	LOT	>>> 2025 - 2026 BLANKET ORDER <<< BLANKET ORDER TO COVER THE COST OF SUPPLIES AND MATERIALS, NOT EQUIPMENT, TO BE ORDERED ONLINE ON AN "AS NEEDED" BASIS, EFFECTIVE 7/1/2025 THROUGH 6/30/2026. TOTAL AMOUNT OF THIS ORDER IS NOT TO EXCEED $1,000 (INCLUDING TAX & SHIPPING) ALL ORDERS TO BE DELIVERED, MONDAY-FRIDAY, 8:00 AM TO 3:00 PM, TO George Washington Elementary ATTN: Cherie Doomanis 2322 N Lincoln St BURBANK, CA 91504 INSTRUCTIONS TO AMAZON USER:	1,000.00	1,000.00

Vendor Instructions:

1. **Show purchase order number on all invoices, shipping papers and correspondence.**
2. **Mail invoice in duplicate Attn: Accounts Payable, at the above address.**
3. **Packing slip must accompany each delivery showing purchase order, catalog number, serial number and description.**
4. **No changes without written authorization from purchasing.**
5. **If freight charges are applicable, prepay and add to invoice. No C.O.D. charges permitted.**
6. **All vendors/manufacturers representatives must send manufacturers safety data sheet (OSHA Form 20 or equivalent) with shipment when applicable.**

SUB TOTAL	$ 5,000.00
SALES TAX	$ 0.00
SHIPPING	$ 0.00
TOTAL	$ 5,000.00

BURBANK UNIFIED SCHOOL DISTRICT

Approved By: Oscar Macias, Ed.D.

"OVERSERVE THE UNDERSERVED"

VENDOR COPY

PURCHASE ORDER

BURBANK UNIFIED SCHOOL DISTRICT

1900 WEST OLIVE AVE, BURBANK, CA 91506-2460
Phone: (818) 729-4400 Fax: (818) 729-4534

PURCHASE ORDER NO.
26001778
Show this number on invoices, packages and correspondence.

VENDOR

AMAZON CAPITAL SERVICES
PO BOX 035184
SEATTLE, WA 98124-5184

Phone: (206) 435-3958 **Fax:**

SHIP TO

BURBANK UNIFIED SCHOOL DISTRICT
JEFFERSON ELEMENTARY
1900 N. SIXTH ST.
BURBANK, CA 91504-2999

For: JEFFERSON ELEMENTARY
Y. DIAZ/Ron Young - Principal Tittle III EL

PO Date: 12/09/2025 **Deliver By:** 12/09/2025 **Buyer Name:** Maro Bojolyan

ITEM NO.	QTY ORDERED	UNIT OF ISSUE	DESCRIPTION	UNIT PRICE	AMOUNT
1	1	CO	CHANGE ORDER #1: INCREASE P.O. #26001778 BY $1,000.00 FOR A REVISED TOTAL OF $2,500.00 DUE TO NEED MORE FUNDS TO PURCHASE MATERIALS AND SUPPLIES, AS PER R0003249. **********	1,000.00	1,000.00
2	1	LOT	>>> 2025 - 2026 BLANKET ORDER <<< BLANKET ORDER TO COVER THE COST OF SUPPLIES AND MATERIALS, NOT EQUIPMENT, TO BE ORDERED ONLINE ON AN "AS NEEDED" BASIS, EFFECTIVE 7/1/2025 THROUGH 6/30/2025 TOTAL AMOUNT OF THIS ORDER IS NOT TO EXCEED $1,500.00 (INCLUDING TAX & SHIPPING) ALL ORDERS TO BE DELIVERED, MONDAY-FRIDAY, 8:00 AM TO 3:00 PM, TO JEFFERSON ELEMENTARY ATTN: YAYA 1900 NORTH SIXTH STREET BURBANK, CA 91504 INSTRUCTIONS TO AMAZON USER: SELECT BLANKET PO26001778 WHEN CHECKING OUT A CART ON AMAZON. UPON RECEIPT OF THE ORDER, NOTE RECEIPT OF ALL ITEMS IN YOUR AMAZON ACCOUNT AND SEND A BUDGET TRANSFER REQUEST SHOULD YOU NEED TO CHARGE THIS ORDER TO A DIFFERENT EXPENSE ACCOUNT.	1,500.00	1,500.00

Vendor Instructions:

1. **Show purchase order number on all invoices, shipping papers and correspondence.**
2. **Mail invoice in duplicate Attn: Accounts Payable, at the above address.**
3. **Packing slip must accompany each delivery showing purchase order, catalog number, serial number and description.**
4. **No changes without written authorization from purchasing.**
5. **If freight charges are applicable, prepay and add to invoice. No C.O.D. charges permitted.**
6. **All vendors/manufacturers representatives must send manufacturers safety data sheet (OSHA Form 20 or equivalent) with shipment when applicable.**

SUB TOTAL	$ 2,500.00
SALES TAX	$ 0.00
SHIPPING	$ 0.00
TOTAL	$ 2,500.00

BURBANK UNIFIED SCHOOL DISTRICT

Approved By: Oscar Macias, Ed.D.

"OVERSERVE THE UNDERSERVED"

VENDOR COPY

PURCHASE ORDER

BURBANK UNIFIED SCHOOL DISTRICT

1900 WEST OLIVE AVE, BURBANK, CA 91506-2460
Phone: (818) 729-4400 Fax: (818) 729-4534

PURCHASE ORDER NO.
26001798
Show this number on invoices, packages and correspondence.

VENDOR

MB DANCE INC
GARRI DANCE STUDIO
3715 W MAGNOLIA BLVD
BURBANK, CA 91505-2818

Phone: (818) 636-5014 **Fax:**

SHIP TO

BURBANK UNIFIED SCHOOL DISTRICT
CHILD DEVELOPMENT SERVICES
1900 WEST OLIVE AVE.
BURBANK, CA 91506-2460

For: CHILD DEVELOPMENT SERVICES
LAURA FLOSI - ASES

PO Date: 12/11/2025 **Deliver By:** 12/13/2025 **Buyer Name:** Maro Bojolyan

ITEM NO.	QTY ORDERED	UNIT OF ISSUE	DESCRIPTION	UNIT PRICE	AMOUNT
1	1	CO	CHANGE ORDER #1: INCREASE P.O. # 26001798 BY $18784.00 FOR A REVISED TOTAL OF $27000.00 DUE TO COMPLETE CONTRACTED PAYMENTS, AS PER R0003185. **********	18,784.00	18,784.00
2	1	LOT	AGREEMENT BETWEEN THE BURBANK UNIFIED SCHOOL DISTRICT AND GARRI DANCE STUDIO DBA MB DANCE INC, CONSULTANT, FOR THE FOLLOWING SERVICES: TEACH DANCE AND ART INSTRUCTION CONSULTANT AGREES TO PERFORM SERVICES AT A RATE OF $VARIES PER SESSIONS FOR A TOTAL NOT TO EXCEED $27,000.00. PAYMENTS TO BE MADE ACCORDING TO THE FOLLOWING SCHEDULE: _X_ MULTIPLE PAYMENTS DATE AMOUNT SESSION ONE (7 SESSIONS) AUG-OCT $8216.00 SESSION TWO (5 SESSIONS) NOV-DEC $5870.00 SESSION THREE (5 SESSIONS) JAN-FEB $ 5870.00 SESSION FOUR (6 SESSIONS) APR-MAY $ 7044.00 THE TERM OF THIS AGREEMENT IS FOR THE PERIOD OF08_17/2025 THROUGH 05/27/2026.	8,216.00	8,216.00

Vendor Instructions:

1. **Show purchase order number on all invoices, shipping papers and correspondence.**
2. **Mail invoice in duplicate Attn: Accounts Payable, at the above address.**
3. **Packing slip must accompany each delivery showing purchase order, catalog number, serial number and description.**
4. **No changes without written authorization from purchasing.**
5. **If freight charges are applicable, prepay and add to invoice. No C.O.D. charges permitted.**
6. **All vendors/manufacturers representatives must send manufacturers safety data sheet (OSHA Form 20 or equivalent) with shipment when applicable.**

SUB TOTAL	$ 27,000.00
SALES TAX	$ 0.00
SHIPPING	$ 0.00
TOTAL	$ 27,000.00

BURBANK UNIFIED SCHOOL DISTRICT

Approved By: Oscar Macias, Ed.D.

"OVERSERVE THE UNDERSERVED"

VENDOR COPY

PURCHASE ORDER

BURBANK UNIFIED SCHOOL DISTRICT

1900 WEST OLIVE AVE, BURBANK, CA 91506-2460
Phone: (818) 729-4400 Fax: (818) 729-4534

PURCHASE ORDER NO.
26001899
Show this number on invoices, packages and correspondence.

VENDOR

J.W. PEPPER & SONS, INC
P.O. BOX 642
EXTON, PA 19341

Phone: (800) 345-6296 **Fax:** (562) 921-0562

SHIP TO

BURBANK UNIFIED SCHOOL DISTRICT
JOHN BURROUGHS HIGH SCHOOL
1920 W. CLARK AVE.
BURBANK, CA 91506-1999

For: JOHN BURROUGHS HIGH SCHOOL
J. SANCHEZ/JBHS - IMA - J.W. PEPPER BLANKET

PO Date: 12/19/2025 **Deliver By:** 12/19/2025 **Buyer Name:** Maro Bojolyan

ITEM NO.	QTY ORDERED	UNIT OF ISSUE	DESCRIPTION	UNIT PRICE	AMOUNT
1	1	CO	CHANGE ORDER #1: INCREASE P.O. # 26001899 BY $26.00 FOR A REVISED TOTAL OF $526.00 DUE TO COST DIFFERENCE FOR MATERIALS IN ORDER TO FULLY DEPLETE BLANKET, AS PER R0003130. ********** 2025 - 2026 BLANKET ORDER BLANKET ORDER TO COVER THE COST OF SHEET MUSIC TO BE PURCHASED ON AN AS NEEDED BASIS FOR JOHN BURROUGHS HIGH SCHOOL PERSONS AUTHORIZED TO ORDER FROM THIS PURCHASE ORDER ARE: DAVID ESPANA, IMA DIRECTOR EFFECTIVE JULY 1, 2025, THROUGH JUNE 30, 2026. NOT TO EXCEED: $500.00 INCLUDING TAXES AND SHIPPING P.O. NUMBER MUST BE REFERENCED ON ALL PACKIING LISTS AND INVOICES. VENDOR TO SEND ALL INVOICES TO: APINVOICES@BURBANKUSD.ORG PLEASE ALSO SEND A COPY OF THE INVOICES TO: JOHN BURROUGHS HIGH SCHOOL	26.00	26.00
2	1	LOT		500.00	500.00

Vendor Instructions:

1. **Show purchase order number on all invoices, shipping papers and correspondence.**
2. **Mail invoice in duplicate Attn: Accounts Payable, at the above address.**
3. **Packing slip must accompany each delivery showing purchase order, catalog number, serial number and description.**
4. **No changes without written authorization from purchasing.**
5. **If freight charges are applicable, prepay and add to invoice. No C.O.D. charges permitted.**
6. **All vendors/manufacturers representatives must send manufacturers safety data sheet (OSHA Form 20 or equivalent) with shipment when applicable.**

SUB TOTAL	$ 526.00
SALES TAX	$ 0.00
SHIPPING	$ 0.00
TOTAL	$ 526.00

BURBANK UNIFIED SCHOOL DISTRICT

Approved By: Oscar Macias, Ed.D.

"OVERSERVE THE UNDERSERVED"

VENDOR COPY

PURCHASE ORDER

BURBANK UNIFIED SCHOOL DISTRICT

1900 WEST OLIVE AVE, BURBANK, CA 91506-2460
Phone: (818) 729-4400 Fax: (818) 729-4534

PURCHASE ORDER NO.
26001936
Show this number on invoices, packages and correspondence.

VENDOR

AMAZON CAPITAL SERVICES
PO BOX 035184
SEATTLE, WA 98124-5184

Phone: (206) 435-3958 **Fax:**

SHIP TO

BURBANK UNIFIED SCHOOL DISTRICT
CHILD DEVELOPMENT SERVICES
1900 WEST OLIVE AVE.
BURBANK, CA 91506-2460

For: CHILD DEVELOPMENT SERVICES
J. TRONCOSO/LAURA FLOSI - ASES

PO Date: 12/29/2025 **Deliver By:** 12/29/2025 **Buyer Name:** Maro Bojolyan

ITEM NO.	QTY ORDERED	UNIT OF ISSUE	DESCRIPTION	UNIT PRICE	AMOUNT
1	1	CO	CHANGE ORDER #3: INCREASE BY $2000.00 FOR A REVISED TOTAL OF $2300.00 DUE TO THE NEED FOR MORE PURCHASES, AS PER R0003189. **********	2,000.00	2,000.00
2	1	CO	CHANGE ORDER #2: INCREASE BY $800.00 FOR A REVISED TOTAL OF $1,900.00 DUE TO PURCHASE MORE ITEMS NEEDED AS PER R0002798. **********	800.00	800.00
3	1	CO	CHANGE ORDER #1: INCREASE BY $800.00 FOR A REVISED TOTAL OF $1,100.00 DUE TO PURCHASE MORE ITEMS NEEDED AS PER R0002454. **********	800.00	800.00
4	1	LOT	2025 - 2026 BLANKET ORDER BLANKET ORDER TO COVER THE COST OF SUPPLIES AND MATERIALS, NOT EQUIPMENT, TO BE ORDERED ONLINE ON AN "AS NEEDED" BASIS, EFFECTIVE 7/1/2025 THROUGH 6/30/2026. TOTAL AMOUNT OF THIS ORDER IS NOT TO EXCEED $_300.00 (INCLUDING TAX & SHIPPING) ALL ORDERS TO BE DELIVERED, MONDAY-FRIDAY, 8:00 AM TO 3:00 PM, TO BURBANK UNIFIED SCHOOL DISTRICT	300.00	300.00

Vendor Instructions:

1. **Show purchase order number on all invoices, shipping papers and correspondence.**
2. **Mail invoice in duplicate Attn: Accounts Payable, at the above address.**
3. **Packing slip must accompany each delivery showing purchase order, catalog number, serial number and description.**
4. **No changes without written authorization from purchasing.**
5. **If freight charges are applicable, prepay and add to invoice. No C.O.D. charges permitted.**
6. **All vendors/manufacturers representatives must send manufacturers safety data sheet (OSHA Form 20 or equivalent) with shipment when applicable.**

SUB TOTAL	$ 3,900.00
SALES TAX	$ 0.00
SHIPPING	$ 0.00
TOTAL	$ 3,900.00

BURBANK UNIFIED SCHOOL DISTRICT

Approved By: Oscar Macias, Ed.D.

"OVERSERVE THE UNDERSERVED"

VENDOR COPY

PURCHASE ORDER

BURBANK UNIFIED SCHOOL DISTRICT

1900 WEST OLIVE AVE, BURBANK, CA 91506-2460
Phone: (818) 729-4400 Fax: (818) 729-4534

PURCHASE ORDER NO.
26002074
Show this number on invoices, packages and correspondence.

VENDOR

AMAZON CAPITAL SERVICES
PO BOX 035184
SEATTLE, WA 98124-5184

Phone: (206) 435-3958 **Fax:**

SHIP TO

BURBANK UNIFIED SCHOOL DISTRICT
DISNEY ELEMENTARY
1220 W. ORANGE GROVE AVE.
BURBANK, CA 91506-2016

For: DISNEY ELEMENTARY
B. SCHWARTZ/DISNEY

PO Date: 01/14/2026 **Deliver By:** 01/14/2026 **Buyer Name:** Maro Bojolyan

ITEM NO.	QTY ORDERED	UNIT OF ISSUE	DESCRIPTION	UNIT PRICE	AMOUNT
1	1	CO	CHANGE ORDER #1: INCREASE BY $1,000.00 FOR A REVISED TOTAL OF $9,700.00 DUE TO ADDITIONAL CURRICULUM & CURRICULUM SUPPLIES NEEDED, AS PER R0003190. ********** 2025 - 2026 BLANKET ORDER BLANKET ORDER TO COVER THE COST OF SUPPLIES AND MATERIALS, NOT EQUIPMENT, TO BE ORDERED ONLINE ON AN "AS NEEDED" BASIS, EFFECTIVE 7/1/2025 THROUGH 6/30/2026. TOTAL AMOUNT OF THIS ORDER IS NOT TO EXCEED $8700 (INCLUDING TAX & SHIPPING) ALL ORDERS TO BE DELIVERED, MONDAY-FRIDAY, 8:00 AM TO 3:00 PM, TO WALT DISNEY ELEMENTARY ATTN: BROOKE SCHWARTZ 1220 W ORANGE GROVE AVE BURBANK, CA 91506 INSTRUCTIONS TO AMAZON USER: SELECT BLANKET PO 26002074 WHEN CHECKING OUT A CART ON AMAZON. UPON RECEIPT OF THE ORDER, NOTE RECEIPT OF ALL ITEMS IN YOUR AMAZON ACCOUNT AND SEND A BUDGET TRANSFER REQUEST SHOULD YOU NEED TO CHARGE THIS ORDER TO A DIFFERENT EXPENSE ACCOUNT.	1,000.00	1,000.00
2	1	LOT		8,700.00	8,700.00

Vendor Instructions:

1. **Show purchase order number on all invoices, shipping papers and correspondence.**
2. **Mail invoice in duplicate Attn: Accounts Payable, at the above address.**
3. **Packing slip must accompany each delivery showing purchase order, catalog number, serial number and description.**
4. **No changes without written authorization from purchasing.**
5. **If freight charges are applicable, prepay and add to invoice. No C.O.D. charges permitted.**
6. **All vendors/manufacturers representatives must send manufacturers safety data sheet (OSHA Form 20 or equivalent) with shipment when applicable.**

SUB TOTAL	$ 9,700.00
SALES TAX	$ 0.00
SHIPPING	$ 0.00
TOTAL	$ 9,700.00

BURBANK UNIFIED SCHOOL DISTRICT

Approved By: Oscar Macias, Ed.D.

"OVERSERVE THE UNDERSERVED"

VENDOR COPY

PURCHASE ORDER

BURBANK UNIFIED SCHOOL DISTRICT

1900 WEST OLIVE AVE, BURBANK, CA 91506-2460
Phone: (818) 729-4400 Fax: (818) 729-4534

PURCHASE ORDER NO.
26002126
Show this number on invoices, packages and correspondence.

VENDOR

LINGUABEE LLC
1550 LARIMER STREET # 503
DENVER, CO 80202

Phone: (303) 872-9525 **Fax:**

SHIP TO

BURBANK UNIFIED SCHOOL DISTRICT
PERSONNEL SERVICES
1900 WEST OLIVE ST.
BURBANK, CA 91506-2460

For: PERSONNEL SERVICES
L. TRAMMEL/HUMAN RESOURCES SERVICES

PO Date: 01/21/2026 **Deliver By:** 09/28/2025 **Buyer Name:** Maro Bojolyan

ITEM NO.	QTY ORDERED	UNIT OF ISSUE	DESCRIPTION	UNIT PRICE	AMOUNT
1	1	CO	CHANGE ORDER #1: INCREASE BY $1,000.00 FOR A REVISED TOTAL OF $3,000.00 DUE TO THE NEED TO PAY INVOICES FOR INTERPRETING SERVICES, R0002941. ********** AGREEMENT BETWEEN THE BURBANK UNIFIED SCHOOL DISTRICT AND LINGUABEE LLC, CONSULTANT, FOR THE FOLLOWING SERVICES: PROVIDING DHH INTERPRETING SERVICES FOR SPECIAL EDUCATION STAFF CONSULTANT AGREES TO PERFORM SERVICES FOR A TOTAL NOT TO EXCEED $2,000.00. PAYMENTS TO BE MADE ACCORDING TO THE FOLLOWING SCHEDULE: _X__ MULTIPLE PAYMENTS BILLING MONTHLY THE TERM OF THIS AGREEMENT IS FOR THE PERIOD OF 06/30/2025 THROUGH 07/01/2026. BOARD APPROVAL DATE: 1/15/26	1,000.00	1,000.00
2	1	LOT		2,000.00	2,000.00

Vendor Instructions:

1. **Show purchase order number on all invoices, shipping papers and correspondence.**
2. **Mail invoice in duplicate Attn: Accounts Payable, at the above address.**
3. **Packing slip must accompany each delivery showing purchase order, catalog number, serial number and description.**
4. **No changes without written authorization from purchasing.**
5. **If freight charges are applicable, prepay and add to invoice. No C.O.D. charges permitted.**
6. **All vendors/manufacturers representatives must send manufacturers safety data sheet (OSHA Form 20 or equivalent) with shipment when applicable.**

SUB TOTAL	$ 3,000.00
SALES TAX	$ 0.00
SHIPPING	$ 0.00
TOTAL	$ 3,000.00

BURBANK UNIFIED SCHOOL DISTRICT

Approved By: Oscar Macias, Ed.D.

"OVERSERVE THE UNDERSERVED"

VENDOR COPY

PURCHASE ORDER

BURBANK UNIFIED SCHOOL DISTRICT

1900 WEST OLIVE AVE, BURBANK, CA 91506-2460
Phone: (818) 729-4400 Fax: (818) 729-4534

PURCHASE ORDER NO.
26002169
Show this number on invoices, packages and correspondence.

VENDOR

AMAZON CAPITAL SERVICES
PO BOX 035184
SEATTLE, WA 98124-5184

Phone: (206) 435-3958 **Fax:**

SHIP TO

BURBANK UNIFIED SCHOOL DISTRICT
LUTHER BURBANK MIDDLE SCHOOL
3700 W. JEFFRIES AVE.
BURBANK, CA 91505-1896

For: LUTHER BURBANK MIDDLE SCHOOL
SAL J.

PO Date: 01/26/2026 **Deliver By:** 01/26/2026 **Buyer Name:** Maro Bojolyan

ITEM NO.	QTY ORDERED	UNIT OF ISSUE	DESCRIPTION	UNIT PRICE	AMOUNT
1	1	CO	CHANGE ORDER #1: INCREASE P.O. # 26002169 BY $5,000.00 FOR A REVISED TOTAL OF $6,000.00 DUE TO INCREASE IN USE OF AMAZON FOR PROP 28 PURCHASES BY ELECTIVE ARTS CLASSES, AS PER R0003344. **********	5,000.00	5,000.00
2	1	LOT	>>> 2025 - 2026 BLANKET ORDER <<< BLANKET ORDER TO COVER THE COST OF SUPPLIES AND MATERIALS, NOT EQUIPMENT, TO BE ORDERED ONLINE ON AN "AS NEEDED" BASIS, EFFECTIVE 7/1/2025 THROUGH 6/30/2026. TOTAL AMOUNT OF THIS ORDER IS NOT TO EXCEED $1000.00 (INCLUDING TAX & SHIPPING) ALL ORDERS TO BE DELIVERED, MONDAY-FRIDAY, 8:00 AM TO 4:00 PM, TO LUTHER BURBANK MIDDLE SCHOOL ATTN: SAL JIMENEZ 3700 WEST JEFFRIES AVE BURBANK, CA 91505 INSTRUCTIONS TO AMAZON USER: SELECT BLANKET PO 26002169 WHEN CHECKING OUT A CART ON AMAZON. UPON RECEIPT OF THE ORDER, COMPLETE A RECEIVING REPORT AND SUBMIT TO ACCOUNTS PAYABLE.	1,000.00	1,000.00

Vendor Instructions:

1. **Show purchase order number on all invoices, shipping papers and correspondence.**
2. **Mail invoice in duplicate Attn: Accounts Payable, at the above address.**
3. **Packing slip must accompany each delivery showing purchase order, catalog number, serial number and description.**
4. **No changes without written authorization from purchasing.**
5. **If freight charges are applicable, prepay and add to invoice. No C.O.D. charges permitted.**
6. **All vendors/manufacturers representatives must send manufacturers safety data sheet (OSHA Form 20 or equivalent) with shipment when applicable.**

SUB TOTAL	$ 6,000.00
SALES TAX	$ 0.00
SHIPPING	$ 0.00
TOTAL	$ 6,000.00

BURBANK UNIFIED SCHOOL DISTRICT

Approved By: Oscar Macias, Ed.D.

"OVERSERVE THE UNDERSERVED"

VENDOR COPY

PURCHASE ORDER

BURBANK UNIFIED SCHOOL DISTRICT

1900 WEST OLIVE AVE, BURBANK, CA 91506-2460
Phone: (818) 729-4400 Fax: (818) 729-4534

PURCHASE ORDER NO.
26002170
Show this number on invoices, packages and correspondence.

VENDOR

AMAZON CAPITAL SERVICES
PO BOX 035184
SEATTLE, WA 98124-5184

Phone: (206) 435-3958 **Fax:**

SHIP TO

BURBANK UNIFIED SCHOOL DISTRICT
WASHINGTON ELEMENTARY
2322 N. LINCOLN ST.
BURBANK, CA 91504-2625

For: WASHINGTON ELEMENTARY
C. DOOMANIS/Vinyard - Prop 28

PO Date: 01/26/2026 **Deliver By:** 01/26/2026 **Buyer Name:** Maro Bojolyan

ITEM NO.	QTY ORDERED	UNIT OF ISSUE	DESCRIPTION	UNIT PRICE	AMOUNT
1	1	CO	CHANGE ORDER #1: INCREASE P.O. #26002170 BY $1,000.00 FOR A REVISED TOTAL OF $2,000.00 DUE TO the need to order more supplies, as per R0003252. **********	1,000.00	1,000.00
2	1	LOT	2025 - 2026 BLANKET ORDER BLANKET ORDER TO COVER THE COST OF SUPPLIES AND MATERIALS, NOT EQUIPMENT, TO BE ORDERED ONLINE ON AN "AS NEEDED" BASIS, EFFECTIVE 7/1/2025 THROUGH 6/30/2026. TOTAL AMOUNT OF THIS ORDER IS NOT TO EXCEED $1,000 (INCLUDING TAX & SHIPPING) ALL ORDERS TO BE DELIVERED, MONDAY-FRIDAY, 8:00 AM TO 3:00 PM, TO George Washington Elementary ATTN: Cherie Doomanis 2322 N Lincoln St BURBANK, CA 91504 INSTRUCTIONS TO AMAZON USER: SELECT BLANKET PO 26002170 WHEN CHECKING OUT A CART ON AMAZON. UPON RECEIPT OF THE ORDER, NOTE RECEIPT OF ALL ITEMS IN YOUR AMAZON ACCOUNT AND SEND A BUDGET TRANSFER REQUEST SHOULD YOU NEED TO CHARGE THIS ORDER TO A DIFFERENT EXPENSE ACCOUNT.	1,000.00	1,000.00

SUB TOTAL	$ 2,000.00
SALES TAX	$ 0.00
SHIPPING	$ 0.00
TOTAL	$ 2,000.00

Vendor Instructions:

1. **Show purchase order number on all invoices, shipping papers and correspondence.**
2. **Mail invoice in duplicate Attn: Accounts Payable, at the above address.**
3. **Packing slip must accompany each delivery showing purchase order, catalog number, serial number and description.**
4. **No changes without written authorization from purchasing.**
5. **If freight charges are applicable, prepay and add to invoice. No C.O.D. charges permitted.**
6. **All vendors/manufacturers representatives must send manufacturers safety data sheet (OSHA Form 20 or equivalent) with shipment when applicable.**

BURBANK UNIFIED SCHOOL DISTRICT

Approved By: Oscar Macias, Ed.D.

"OVERSERVE THE UNDERSERVED"

VENDOR COPY

PURCHASE ORDER

BURBANK UNIFIED SCHOOL DISTRICT

1900 WEST OLIVE AVE, BURBANK, CA 91506-2460
Phone: (818) 729-4400 Fax: (818) 729-4534

PURCHASE ORDER NO.
26002563
Show this number on invoices, packages and correspondence.

VENDOR

AMAZON CAPITAL SERVICES
PO BOX 035184
SEATTLE, WA 98124-5184

Phone: (206) 435-3958 **Fax:**

SHIP TO

BURBANK UNIFIED SCHOOL DISTRICT
EMERSON ELEMENTARY
720 E. CYPRESS AVE.
BURBANK, CA 91501-1898

For: EMERSON ELEMENTARY
MAUREEN/RSP

PO Date: 03/05/2026 **Deliver By:** 03/05/2026 **Buyer Name:** Maro Bojolyan

ITEM NO.	QTY ORDERED	UNIT OF ISSUE	DESCRIPTION	UNIT PRICE	AMOUNT
1	1	CO	CHANGE ORDER #1: INCRASE BY $150.00 FOR A REVISED TOTAL OF $250.00 DUE TO NEED FOR MORE SUPPLIES, AS PER R0003204. **********	150.00	150.00
2	1	LOT	2026 - 2027 BLANKET ORDER BLANKET ORDER TO COVER THE COST OF SUPPLIES AND MATERIALS, NOT EQUIPMENT, TO BE ORDERED ONLINE ON AN "AS NEEDED" BASIS, EFFECTIVE 3/3/2026 THROUGH 6/30/2026. TOTAL AMOUNT OF THIS ORDER IS NOT TO EXCEED $100.00 (INCLUDING TAX & SHIPPING) ALL ORDERS TO BE DELIVERED, MONDAY-FRIDAY, 8:00 AM TO 3:00 PM, TO EMERSON ATTN: MAUREEN BAER 720 E CYPRESS AVE BURBANK, CA 91505 INSTRUCTIONS TO AMAZON USER: SELECT BLANKET PO 26002563 WHEN CHECKING OUT A CART ON AMAZON. UPON RECEIPT OF THE ORDER, NOTE RECEIPT OF ALL ITEMS IN YOUR AMAZON ACCOUNT AND SEND A BUDGET TRANSFER REQUEST SHOULD YOU NEED TO CHARGE THIS ORDER TO A DIFFERENT EXPENSE ACCOUNT.	100.00	100.00

Vendor Instructions:

1. **Show purchase order number on all invoices, shipping papers and correspondence.**
2. **Mail invoice in duplicate Attn: Accounts Payable, at the above address.**
3. **Packing slip must accompany each delivery showing purchase order, catalog number, serial number and description.**
4. **No changes without written authorization from purchasing.**
5. **If freight charges are applicable, prepay and add to invoice. No C.O.D. charges permitted.**
6. **All vendors/manufacturers representatives must send manufacturers safety data sheet (OSHA Form 20 or equivalent) with shipment when applicable.**

SUB TOTAL	$ 250.00
SALES TAX	$ 0.00
SHIPPING	$ 0.00
TOTAL	$ 250.00

BURBANK UNIFIED SCHOOL DISTRICT

Approved By: Oscar Macias, Ed.D.

"OVERSERVE THE UNDERSERVED"

VENDOR COPY

PURCHASE ORDER

BURBANK UNIFIED SCHOOL DISTRICT

1900 WEST OLIVE AVE, BURBANK, CA 91506-2460
Phone: (818) 729-4400 Fax: (818) 729-4534

PURCHASE ORDER NO.
26002564
Show this number on invoices, packages and correspondence.

VENDOR

AMAZON CAPITAL SERVICES
PO BOX 035184
SEATTLE, WA 98124-5184

Phone: (206) 435-3958 **Fax:**

SHIP TO

BURBANK UNIFIED SCHOOL DISTRICT
JOHN BURROUGHS HIGH SCHOOL
1920 W. CLARK AVE.
BURBANK, CA 91506-1999

For: JOHN BURROUGHS HIGH SCHOOL
J. SANCEHZ/ SPED - AMAZON BLANKET - RSP

PO Date: 03/05/2026 **Deliver By:** 03/05/2026 **Buyer Name:** Maro Bojolyan

ITEM NO.	QTY ORDERED	UNIT OF ISSUE	DESCRIPTION	UNIT PRICE	AMOUNT
1	1	CO	CHANGE ORDER #1: REDUCE BY $102.00 FOR A REVISED TOTAL OF $2,270.16 DUE TO NEED TO APPROPRIATE FUNDS FOR REIMBURSMENT, AS PER R0003088. **********	-102.00	-102.00
2	1	LOT	2025-26 BLANKET ORDER BLANKET ORDER TO COVER THE COST OF SUPPLIES AND MATERIALS, NOT EQUIPMENT, TO BE ORDERED ONLINE ON AN "AS NEEDED" BASIS, EFFECTIVE 7/1/2025 THROUGH 6/30/2026. TOTAL AMOUNT OF THIS ORDER IS NOT TO EXCEED $2372.16 (INCLUDING TAX & SHIPPING) ALL ORDERS TO BE DELIVERED, MONDAY-FRIDAY, 8:00 AM TO 3:00 PM, TO JOHN BURROUGHS HIGH SCHOOL ATTN: JESSICA SANCHEZ 1920 W. CLARK AVE BURBANK, CA 91505 INSTRUCTIONS TO AMAZON USER: SELECT BLANKET PO 26002564 WHEN CHECKING OUT A CART ON AMAZON. UPON RECEIPT OF THE ORDER, NOTE RECEIPT OF ALL ITEMS IN YOUR AMAZON ACCOUNT AND SEND A BUDGET TRANSFER REQUEST SHOULD YOU NEED TO CHARGE THIS ORDER TO A DIFFERENT EXPENSE ACCOUNT.	2,372.16	2,372.16

Vendor Instructions:

1. **Show purchase order number on all invoices, shipping papers and correspondence.**
2. **Mail invoice in duplicate Attn: Accounts Payable, at the above address.**
3. **Packing slip must accompany each delivery showing purchase order, catalog number, serial number and description.**
4. **No changes without written authorization from purchasing.**
5. **If freight charges are applicable, prepay and add to invoice. No C.O.D. charges permitted.**
6. **All vendors/manufacturers representatives must send manufacturers safety data sheet (OSHA Form 20 or equivalent) with shipment when applicable.**

SUB TOTAL	$ 2,270.16
SALES TAX	$ 0.00
SHIPPING	$ 0.00
TOTAL	$ 2,270.16

BURBANK UNIFIED SCHOOL DISTRICT

Approved By: Oscar Macias, Ed.D.

"OVERSERVE THE UNDERSERVED"

VENDOR COPY

PURCHASE ORDER

BURBANK UNIFIED SCHOOL DISTRICT

1900 WEST OLIVE AVE, BURBANK, CA 91506-2460
Phone: (818) 729-4400 Fax: (818) 729-4534

PURCHASE ORDER NO.
26002635
Show this number on invoices, packages and correspondence.

VENDOR
BOX CARS AND ONE-EYED JACKS, INC
17920-105 AVENUE NW, STE 101
EDMONTON, AB T5S-2H5

Phone: (780) 440-6284 **Fax:** (780) 440-1619

SHIP TO
BURBANK UNIFIED SCHOOL DISTRICT
WAREHOUSE
510 S. SHELTON ST.
BURBANK, CA 91506-2818

For: DISNEY ELEMENTARY
B. SCHWARTZ/DISNEY/MCNUTT

PO Date: 03/12/2026 **Deliver By:** 03/23/2026 **Buyer Name:** Maro Bojolyan

ITEM NO.	QTY ORDERED	UNIT OF ISSUE	DESCRIPTION	UNIT PRICE	AMOUNT
		CO	CHANGE ORDER #1: ENTER QTY FOR SHIPPING COST **********		
1	50	TRAY	DC01TRAY STRATEDICE TRAY WITH 36 REGULAR DICE	15.50	775.00
2	154	EACH	MN35 DICE SHAKER (SINGLE/EMPTY)	2.64	406.56
3	1	LOT	DC26BLKG DOUBLE REGULAR DICE GREEN (PKG OF 50)	29.38	29.38
4	1	LOT	DC26BLKV DOUBLE REGULAR DICE VIOLET (PKG OF 50)	29.38	29.38
5	1	EACH	BK27 MATH SHAKERS PRIMARY PDF	20.00	20.00
6	1	EACH	BK28 MATH SHAKERS UPPER ELEMENTARY PDF	20.00	20.00
7	1	EACH	BK30 ALL HANDS ON DECK REVISED PDF	35.00	35.00
8	1	EACH	BK34 SHUFFLING INTO MATH REVISED PDF	35.00	35.00
9	1	EACH	BK29A DOUBLE DARE YOU REVISED PDF	30.00	30.00
10	1		SHIPPING	148.84	148.84
			********** REFERENCE QUOTE #: DISNEYMARCH26, WITH A CHANGE TO SHIPPING ADDRESS AND WITH BILLING INFO AS INDICATED ON THIS PO 3/24 ENTERED QTY FOR SHIPPING COST AS IT WAS "0" *** SPECIAL INSTRUCTIONS *** * VENDOR: FOR PROMPT PAYMENT, BILL TO: APINVOICES@BURBANKUSD.ORG * PLEASE NOTE: WE ARE NO LONGER ACCEPTING		

Vendor Instructions:

1. **Show purchase order number on all invoices, shipping papers and correspondence.**
2. **Mail invoice in duplicate Attn: Accounts Payable, at the above address.**
3. **Packing slip must accompany each delivery showing purchase order, catalog number, serial number and description.**
4. **No changes without written authorization from purchasing.**
5. **If freight charges are applicable, prepay and add to invoice. No C.O.D. charges permitted.**
6. **All vendors/manufacturers representatives must send manufacturers safety data sheet (OSHA Form 20 or equivalent) with shipment when applicable.**

SUB TOTAL	$ 1,529.16
SALES TAX	$ 130.23
SHIPPING	$ 0.00
TOTAL	$ 1,659.39

BURBANK UNIFIED SCHOOL DISTRICT

Approved By: Oscar Macias, Ed.D.

"OVERSERVE THE UNDERSERVED"

VENDOR COPY

PURCHASE ORDER

BURBANK UNIFIED SCHOOL DISTRICT

1900 WEST OLIVE AVE, BURBANK, CA 91506-2460
Phone: (818) 729-4400 Fax: (818) 729-4534

PURCHASE ORDER NO.
26002644
Show this number on invoices, packages and correspondence.

VENDOR
FOLLETT CONTENT SOLUTIONS LLC
1340 RIDGEVIEW DRIVE
MCHENRY, IL 60050

Phone: (877) 899-8550 **Fax:** (818)

SHIP TO
BURBANK UNIFIED SCHOOL DISTRICT
JEFFERSON ELEMENTARY
1900 N. SIXTH ST.
BURBANK, CA 91504-2999

For: JEFFERSON ELEMENTARY
Y. DIAZ/Ron Young - Principal JFC Library

PO Date: 03/13/2026 **Deliver By:** 03/30/2026 **Buyer Name:** Maro Bojolyan

ITEM NO.	QTY ORDERED	UNIT OF ISSUE	DESCRIPTION	UNIT PRICE	AMOUNT
			CHANGE ORDER #1: REMOVE ITEMs # 2 & 3		
			**********		
1	1	Lot	VARIOUS BOOKS	3,708.27	3,708.27
2	1	EA	* REMOVE * 2814AH-7 DAWN ON THE COAST	-15.99	-15.99
3	1	EA	* REMOVE *2541PK-4 FIGHT OR FLIGHT	-14.99	-14.99
			**********		
			REFERENCE QUOTE #: 11933956, WITH A CHANGE TO BILLING AS INDICATED ON THIS PO		
			*** SPECIAL INSTRUCTIONS ***		
			* VENDOR: FOR PROMPT PAYMENT, BILL TO: APINVOICES@BURBANKUSD.ORG		
			* PLEASE NOTE: WE ARE NO LONGER ACCEPTING HARD COPY INVOICES SENT BY MAIL		
			* VENDOR NOTE: PLEASE SHIP DIRECTLY TO OUR SITE AS INDICATED. PLEASE BE SURE TO INCLUDE OUR PURCHASE ORDER NUMBER ON ALL BOXES AND PACKING SLIPS. ALL DELIVERIES WILL BE RECEIVED BETWEEN THE HOURS OF 8:00AM - 4:00PM.		
			* PLEASE NOTE THAT THE DISTRICT WILL BE CLOSED FOR SPRING RECESS FROM MARCH 16 THROUGH MARCH 20, 2026. NO DELIVERIES WILL BE ACCEPTED DURING THIS TIME.		

Vendor Instructions:

1. **Show purchase order number on all invoices, shipping papers and correspondence.**
2. **Mail invoice in duplicate Attn: Accounts Payable, at the above address.**
3. **Packing slip must accompany each delivery showing purchase order, catalog number, serial number and description.**
4. **No changes without written authorization from purchasing.**
5. **If freight charges are applicable, prepay and add to invoice. No C.O.D. charges permitted.**
6. **All vendors/manufacturers representatives must send manufacturers safety data sheet (OSHA Form 20 or equivalent) with shipment when applicable.**

SUB TOTAL	$ 3,677.29
SALES TAX	$ 386.12
SHIPPING	$ 0.00
TOTAL	$ 4,063.41

BURBANK UNIFIED SCHOOL DISTRICT

Approved By: Oscar Macias, Ed.D.

"OVERSERVE THE UNDERSERVED"

VENDOR COPY

PURCHASE ORDER

BURBANK UNIFIED SCHOOL DISTRICT

1900 WEST OLIVE AVE, BURBANK, CA 91506-2460
Phone: (818) 729-4400 Fax: (818) 729-4534

PURCHASE ORDER NO.
26002732
Show this number on invoices, packages and correspondence.

VENDOR

AMAZON CAPITAL SERVICES
PO BOX 035184
SEATTLE, WA 98124-5184

Phone: (206) 435-3958 **Fax:**

SHIP TO

BURBANK UNIFIED SCHOOL DISTRICT
STEVENSON ELEMENTARY
3333 OAK ST.
BURBANK, CA 91505-3514

For: STEVENSON ELEMENTARY
C. SALAS/Lake IMM Fund order 2

PO Date: 03/26/2026 **Deliver By:** 04/04/2026 **Buyer Name:** Maro Bojolyan

ITEM NO.	QTY ORDERED	UNIT OF ISSUE	DESCRIPTION	UNIT PRICE	AMOUNT
		CO	CHANGE ORDER #1: INCREASE BY $399.97 FOR A REVISED TOTAL OF $459.83 DUE TO MUST MEET MINIMUM $100.00 ORDER REQUIREMENT, AS PER R0003195. * THIS INCREASE IS REFLECTED IN ADDED ITEMs # 3 & 4 ********** ORDER UPDATE: ADD LINE ITEM #3 **********		
1	1		Cinrobiye 24 Pcs Boho Privacy Folders Standard for Students Cardboard Shields Test Privacy Boards Motivational Words Desk Dividers Shield for Classroom School Study Su… $29.99	29.99	29.99
2	3		Mead Spiral Notebook, 6 Pack, 1 Subject, College Ruled Paper, 7-1/2" x 10-1/2", 70 Sheets per Notebook, Assorted Bright Colors (830050-ECM)Mead Spiral Notebook, 6 Pack, 1 Subject, College Ruled Paper, 7-1/2" x 10-1/2", 70 Sheets per Notebook, Assorted Bright Colors (830050-ECM) $8.06	8.06	24.18
3	1		* ADD * SECOND CART'S ITEMS added due to minimu dollar amount requirement for non-blanket orders	130.00	130.00
4	1		* ADD * SECOND CART'S ITEMS added due to minimu dollar amount requirement for non-blanket orders ********** 111-7739327-0971429	269.97	269.97

Vendor Instructions:

1. **Show purchase order number on all invoices, shipping papers and correspondence.**
2. **Mail invoice in duplicate Attn: Accounts Payable, at the above address.**
3. **Packing slip must accompany each delivery showing purchase order, catalog number, serial number and description.**
4. **No changes without written authorization from purchasing.**
5. **If freight charges are applicable, prepay and add to invoice. No C.O.D. charges permitted.**
6. **All vendors/manufacturers representatives must send manufacturers safety data sheet (OSHA Form 20 or equivalent) with shipment when applicable.**

SUB TOTAL	$ 454.14
SALES TAX	$ 5.69
SHIPPING	$ 0.00
TOTAL	$ 459.83

BURBANK UNIFIED SCHOOL DISTRICT

Approved By: Oscar Macias, Ed.D.

"OVERSERVE THE UNDERSERVED"

VENDOR COPY

TO: Board of Education / Superintendent Consent 05/07/2026

SUBMITTED BY: Human Resources Services

SUBJECT: Certificated Personnel - Report Number 25-26-19. It is recommended that the following appointments for Certificated Personnel be approved and/or ratified. All personnel will be properly elected in accordance with District policies and salary schedule.

Change of End Date	Assignment	APPROPRIATION NUMBER	PCT	RATE OF PAY	REMARKS	EFFECTIVE DATE/END DATE
Adair, Nathan	Long Term Sub Sped	01.0-65000.0-57602-11100-1160-7440000	100	S-001-10		01/21/2026 - 04/30/2026
Atherton, Debra	Long Term Sub	01.0-65000.0-57602-11100-1160-7440000	100	T-001-01		10/01/2025 - 04/30/2026
Christensen, Samantha	Long Term Sub Sped	01.0-65000.0-57602-11100-1160-7440000	100	S-001-10		01/12/2026 - 05/01/2026
Huber, Krystal	Long Term Sub	01.0-00000.0-11100-10000-1160-7550000	100	T-001-01		08/08/2025 - 04/30/2026
Sorensen, Tracy	Teacher	01.0-00000.0-11100-10000-1110-2100000	100	T-006-24	Began Service 06/01/1981	05/31/2026

Election: Substitute	Assignment	APPROPRIATION NUMBER	PCT	RATE OF PAY	REMARKS	EFFECTIVE DATE/END DATE
Desfosses, Alexis	Sub Nurse	01.0-00000.0-11100-10000-1160-7550000	100	S-001-09		03/30/2026
Gregorczyk, Linda	Sub/Sped Sub	01.0-00000.0-11100-10000-1160-7550000	100	S-001-01/S-001-02		03/24/2026
Martin Romero, Raul	Adult Sub	11.0-63910.0-41106-10000-1160-5330000	100	S-001-08		03/01/2026
Robertson, Rebecca	Sub/Sped Sub	01.0-00000.0-11100-10000-1160-7550000	100	S-001-01/S-001-02		03/23/2026
Rodriguez, Maria	Sub/Sped Sub	01.0-00000.0-11100-10000-1160-7550000	100	S-001-01/S-001/02		03/23/2026
Werchowsky, Nina	Sub/Sped Sub	01.0-00000.0-11100-10000-1160-7550000	100	S-001-01/S-001/02		03/23/2026

Election: Long Term Substitute	Assignment	APPROPRIATION NUMBER	PCT	RATE OF PAY	REMARKS	EFFECTIVE DATE/END DATE
Jimenez, Brandon	Long Term Sub	01.0-65000.0-57602-11100-1160-7440000	100	S-001-10		04/06/2026 - 05/28/2026
Munoz, Marylou	Long Term Sub	01.0-65000.0-57602-11100-1160-7440000	100	T-001-01		02/23/2026 - 04/10/2026
Rodriguez, Maria Iliana	Long Term Sub	01.0-00000.0-11100-10000-1160-7550000	100	T-001-01		03/23/2026 - 05/29/2026
Wrobel, Kayla	Long Term Sub	01.0-00000.0-11100-10000-1160-7550000	100	S-001-10		03/30/2026 - 04/30/2026

Leave of Absence	Assignment	APPROPRIATION NUMBER	PCT	RATE OF PAY	REMARKS	EFFECTIVE DATE/END DATE
Carroll, Brett	Unpaid LOA	01.0-00000.0-11100-10000-1110-4310000	100	T-003-24	Intermittent	03/02/2026 – 05/29/2026
Palaski, Jessica	Paid LOA	01.0-00000.0-00000-27000-1313-4320000	100	K-007-03		05/18/2026 – 05/29/2026

Released	Assignment	APPROPRIATION NUMBER	PCT	RATE OF PAY	REMARKS	EFFECTIVE DATE/END DATE
Hemingway, Elisa	Sub/Sped Sub	01.0-00000.0-11100-10000-1160-7550000	100	S-001-01/S-001-02		04/08/2026
Olympia, Jennifer	Sub/Sped Sub	01.0-00000.0-11100-10000-1160-7550000	100	S-001-01/S-001-02		04/08/2026

Resignation	Assignment	APPROPRIATION NUMBER	PCT	RATE OF PAY	REMARKS	EFFECTIVE DATE/END DATE
Cook, Edward	Sub/Sped Sub	01.0-00000.0-11100-10000-1160-7550000	100	S-001-01/S-001-02		04/03/2026
Ferrat, Priscilla	Teacher	01.0-00000.0-11100-10000-1110-3210000	100	T-006-09		05/29/2026
Say, Darci	Sub/Sped Sub	01.0-00000.0-11100-10000-1160-7550000	100	S-001-01/S-001-02		04/03/2026
Shattuck, Melinda	Teacher	01.0-00000.0-11100-10000-1110-3220000	100	T-006-04		06/30/2026

Retirement	Assignment	APPROPRIATION NUMBER	PCT	RATE OF PAY	REMARKS	EFFECTIVE DATE/END DATE
Doan, Ann	Teacher	01.0-00000.0-11100-10000-1110-2010000	100	T-006-22	Began Service 10/18/2004	06/30/2026
Flosi, Laura	Director, Child Dev.	01.0-25000.0-00000-27000-1310-7420000	100	K-001-07+MA	Began Service 10/28/2004	06/30/2026
Kuglen, Samuel	Teacher	01.0-00000.0-11100-10000-1110-4320000	100	T-006-24	Began Service 09/07/1994	06/30/2026

TO: Board of Education / Superintendent Consent 05/07/2026

SUBMITTED BY: Human Resources Services

SUBJECT: Certificated Personnel - Report Number 25-26-19. It is recommended that the following appointments for Certificated Personnel be approved and/or ratified. All personnel will be properly elected in accordance with District policies and salary schedule.

Name	Program/Site	Task/Project	Type	Rate	Hours/Days Cap	Applicable Payrolls
Avagyan, Anush	BHS	Class Coverage	Hourly	$54.73	1	03/02/2026 – 03/31/2026
Armes, Deborah	Providencia	Other Hourly	Hourly	$39.67	2.5	04/17/2026 – 04/30/2026
Beal, Briana	BHS	Other Hourly	Hourly	$39.67	1	04/01/2026 – 04/30/2026
Bentley, Jim	BHS	Class Coverage	Hourly	$54.73	1	03/02/2026 – 03/31/2026
Bentley, Jim	BHS	Class Coverage	Hourly	$54.73	2	03/02/2026 – 03/31/2026
Blinder, Eric	Muir	Other Hourly	Hourly	$39.67	3.5	03/28/2026
Bommarito, Giana	Roosevelt	Intervention	Hourly	$53.46	2	04/01/2026 – 04/30/2026
Bommarito, Giana	Roosevelt	Other Hourly	Hourly	$39.67	2	04/01/2026 – 04/30/2026
Burish, Shelly	Muir	Other Hourly	Hourly	$39.67	3.5	03/28/2026
Campbell, Rachell	Muir	Other Hourly	Hourly	$39.67	3.5	03/28/2026
Chakmakchyan, Vartkes	BHS	Class Coverage	Hourly	$54.73	1	03/02/2026 – 03/31/2026
Chakmakchyan, Vartkes	Special Ed	Home Teacher	Hourly	$42.39	6	03/31/2026 – 04/24/2026
Chakmakchyan, Vartkes	Special Ed	Home Teacher	Hourly	$42.39	4	03/31/2026 – 04/24/2026
Cheatum, Amelia	Muir	Other Hourly	Hourly	$39.67	3.5	03/28/2026
Clark, Gregory	BHS	Other Hourly	Hourly	$39.67	1	04/01/2026 – 04/30/2026
Colvin Marvin, Katherine	Providencia	Other Hourly	Hourly	$39.67	16.5	04/17/2026 – 04/30/2026
Collins, Brian	Providencia	Other Hourly	Hourly	$39.67	1	04/17/2026 – 04/30/2026
Cook, Jacob	JBHS	CIF – Varsity G Waterpolo	Stipend	$227.00	1	02/01/2025 – 03/31/2026
Corona, David	BHS	Class Coverage	Hourly	$54.73	1	03/02/2026 – 03/31/2026
Corral, Christopher	BHS	Class Coverage	Hourly	$54.73	1	03/02/2026 – 03/31/2026
Desfosses, Alexis	Health Services	Other Hourly	Hourly	$39.67	4	04/01/2026 – 05/31/2026
Devirgilis, Edward	Muir	Other Hourly	Hourly	$39.67	3.5	03/28/2026
Diaz, Lilyana	BHS	Class Coverage	Hourly	$54.73	1	03/02/2026 – 03/31/2026
Dixon, Joann	JBHS	Other Hourly	Hourly	$39.67	1	04/13/2026
Dorsey, Erin	Muir	Other Hourly	Hourly	$39.67	3.5	03/28/2026
Eshleman, Laura	Miller	Other Hourly	Hourly	$39.67	6	06/02/2026
Enokian, Stefanie	Disney	Other Hourly	Hourly	$39.67	12	04/01/2026 – 05/28/2026
Fitzgerald, Kyle	JBHS	Other Hourly	Hourly	$39.67	1	04/03/2026
Fitzpatrick, Michelle	Miller	Other Hourly	Hourly	$39.67	6	06/02/2026
Ghaman, Roger	JBHS	Other Hourly	Hourly	$39.67	1	03/31/2026
Given, Sarah	BHS	Class Coverage	Hourly	$54.73	2	03/02/2026 – 03/31/2026
Greene, Celia	Miller	Other Hourly	Hourly	$39.67	6	06/02/2026
Grimshaw, Douglas	BHS	Class Coverage	Hourly	$54.73	1	03/02/2026 – 03/31/2026
Grogan-Collazos, Tracey	BHS	Other Hourly	Hourly	$39.67	1	04/01/2026 – 04/30/2026
Hammell, Robert	BHS	Other Hourly	Hourly	$39.67	1	04/01/2026 – 04/30/2026
Henry, Bridgett	Roosevelt	Intervention	Hourly	$53.46	2	04/01/2026 – 04/30/2026
Henry, Bridgett	Roosevelt	Other Hourly	Hourly	$39.67	3	04/01/2026 – 04/30/2026
Hougan, William	JBHS	Saturday Teacher	Daily	$169.90	1	04/18/2026
Hu, Robin	Huerta	Other Hourly	Hourly	$39.67	10	03/01/2026 – 05/29/2026
Huizar, Ellen	Muir	Other Hourly	Hourly	$39.67	3.5	03/28/2026
Irwin, Lindsay	Roosevelt	Intervention	Hourly	$53.46	2	04/01/2026 – 04/30/2026
Irwin, Lindsay	Roosevelt	Other Hourly	Hourly	$39.67	3	04/01/2026 – 04/30/2026
Isaeian, Mazhan	BHS	Class Coverage	Hourly	$54.73	1	03/02/2026 – 03/31/2026

TO: Board of Education / Superintendent Consent 05/07/2026

SUBMITTED BY: Human Resources Services

SUBJECT: Certificated Personnel - Report Number 25-26-19. It is recommended that the following appointments for Certificated Personnel be approved and/or ratified. All personnel will be properly elected in accordance with District policies and salary schedule.

Jensen, Amy	Roosevelt	Intervention	Hourly	$53.46	2	04/01/2026 – 04/30/2026
Jensen, Amy	Roosevelt	Other Hourly	Hourly	$39.67	3	04/01/2026 – 04/30/2026
Jones, Ana	Muir	Other Hourly	Hourly	$39.67	3.5	03/28/2026
Kasumyan, Arman	Muir	Department Chair	Stipend	$1,735.00	1	01/05/2026 – 06/30/2026
Kim, Alexander	BHS	Class Coverage	Hourly	$54.73	1	03/02/2026 – 03/31/2026
Kim, Jung	JBHS	Saturday Teacher	Daily	$169.90	1	03/28/2026
Knoop, Julie	JBHS	Other Hourly	Hourly	$39.67	1	04/10/2026
Krikorian, Christine	Miller	Intervention Teaching	Hourly	$53.46	3.5	03/30/2026
Lance, Michael	BHS	Class Coverage	Hourly	$54.73	2	03/02/2026 – 03/31/2026
Larson, Sarah	Roosevelt	Intervention	Hourly	$53.46	2	04/01/2026 – 04/30/2026
Larson, Sarah	Roosevelt	Other Hourly	Hourly	$39.67	3	04/01/2026 – 04/30/2026
Lee, Lydia	Muir	Other Hourly	Hourly	$39.67	3.5	03/28/2026
Marchese, David	BHS	Class Coverage	Hourly	$54.73	1	03/02/2026 – 03/31/2026
McKeith, Crystal	Miller	Other Hourly	Hourly	$39.67	6	06/02/2026
McNutt, Kelly	Disney	Add'l Duties	Hourly	$102.62	5	12/01/2025 – 05/29/2026
Mohler, Chez-e-rae	Roosevelt	Intervention	Hourly	$53.46	2	04/01/2026 – 04/30/2026
Moore Myers, Amber	Roosevelt	Intervention	Hourly	$53.46	2	04/01/2026 – 04/30/2026
Moore Myers, Amber	Roosevelt	Other Hourly	Hourly	$39.67	3	04/01/2026 – 04/30/2026
Mucha, Michele	Special Ed	Home Teacher	Hourly	$42.39	12	03/31/2026 – 04/24/2026
Nazaryan, Marina	BHS	Class Coverage	Hourly	$54.73	1	03/02/2026 – 03/31/2026
O'Keefe, Heather	Muir	Other Hourly	Hourly	$39.67	3.5	03/28/2026
Oganyan, Victoria	JBHS	CIF – Varsity G Basketball	Stipend	$227.00	6	02/01/2025 – 03/31/2026
Pamperin, Melissa	Miller	Other Hourly	Hourly	$39.67	6	06/02/2026
Papavasiliou, Demetrula	Special Ed	Add'l Duties	Hourly	$95.48	3	03/01/2026 – 05/29/2026
Pepes, Chris	BHS	Class Coverage	Hourly	$54.73	1	03/02/2026 – 03/31/2026
Pepes, Chris	BHS	Saturday Teacher	Daily	$169.90	1	04/01/2026 – 04/30/2026
Pepes, Chris	BHS	Class Coverage	Hourly	$54.73	2	03/02/2026 – 03/31/2026
Perryman, Willie	Roosevelt	Intervention	Hourly	$53.46	2	04/01/2026 – 04/30/2026
Perryman, Willie	Roosevelt	Other Hourly	Hourly	$39.67	3	04/01/2026 – 04/30/2026
Powell, Kari	Miller	Other Hourly	Hourly	$39.67	6	06/02/2026
Raisbeck, Erica	Special Ed	Home Teacher	Hourly	$42.39	76	04/01/2026 – 06/30/2026
Reyes, Dali	Special Ed	Add'l Duties	Hourly	$68.57	3	03/01/2026 – 05/29/2026
Reyes, Juan-Carlos	JBHS	Other Hourly	Hourly	$39.67	12	03/01/2026 – 05/31/2026
Rogers, Sadi	Muir	Other Hourly	Hourly	$39.67	3.5	03/28/2026
Ryffe, Brandon	BHS	Class Coverage	Hourly	$54.73	2	03/02/2026 – 03/31/2026
Ryffe, Brandon	BHS	Class Coverage	Hourly	$54.73	3	03/02/2026 – 03/31/2026
Sherman, Tara	Muir	Other Hourly	Hourly	$39.67	3.5	03/28/2026
Smith, Johanna	JBHS	Other Hourly	Hourly	$39.67	1	04/20/2026
Stehlik-Duran, Shana	Muir	CJSF Middle School	Stipend	$430.00	1	04/01/2026 – 06/30/2026
Sullivan, Arthur	JBHS	CIF G Basketball	Stipend	$127.00	6	02/01/2026 – 03/31/2026
Truong, Hung	JBHS	Other Hourly	Hourly	$39.67	1.5	11/06/2025
Truong, Hung	JBHS	Other Hourly	Hourly	$39.67	1.5	03/11/2026
Truong, Hung	JBHS	Other Hourly	Hourly	$39.67	1	04/10/2026
Van Loo, Brendhen	BHS	Class Coverage	Hourly	$54.73	1	03/02/2026 – 03/31/2026
Vo, Katelyn	Muir	Other Hourly	Hourly	$39.67	3.5	03/28/2026
Walker, Briahna	Harte	Class Coverage	Hourly	$54.73	3	04/01/2026 – 04/-3/2026

TO: Board of Education / Superintendent Consent 05/07/2026

SUBMITTED BY: Human Resources Services

SUBJECT: Certificated Personnel - Report Number 25-26-19. It is recommended that the following appointments for Certificated Personnel be approved and/or ratified. All personnel will be properly elected in accordance with District policies and salary schedule.

Wall, Abbey	Roosevelt	Other Hourly	Hourly	$39.67	15	04/01/2026 – 05/29/2026
Wenzel, Anne	JBHS	Other Hourly	Hourly	$39.67	4	04/10/2026 – 04/10/2026
Wenzel, Anne	JBHS	Other Hourly	Hourly	$39.67	1	04/01/2026
Wenzel. Anne	JBHS	Other Hourly	Hourly	$39.67	1	04/10/2026
Wenzel, Heidi	Roosevelt	Other Hourly	Hourly	$39.67	15	04/01/2026 – 05/29/2026
Wertlieb, Jessica	Muir	Other Hourly	Hourly	$39.67	3.5	03/28/2026
Wills-Sarna, Kathryn	Roosevelt	Intervention	Hourly	$53.46	2	04/01/2026 – 04/30/2026
Winstein, Deborah	Miller	Other Hourly	Hourly	$39.67	6	06/02/2026
Wrobel, Kayla	JBHS	Other Hourly	Hourly	$39.67	15	04/07/2026 – 04/30/2026

Name	Position	Program/Site	%Time FTE	Range & Step	Basis	Effective Date	Ending Date	Remarks
Retirement								
SALAZAR, Maria	Food Services Assistant	13.0-53100.0-00000-37000-2210-2140000	.4688	37-VI	D	04-03-26		Roosevelt Elementary (Began Service 1/1/95)
SANCHEZ, Cynthia	Paraeducator – Deaf & Hard of Hearing	01.0-33100.0-57602-11104-2110-4310000	.8750	39-VI	D	05-28-26		Burbank Adult School (Began Service 6/24/94)
Additional Compensation for Longevity								
DAWOODIAN, Armineh	Registrar	01.0-00000.0-00000-27000-2410-4310000	1.0	42-VI	A	04-01-26		Burbank High School (20 yrs/$284)
MAGALLANES, Josephine	Campus Supervisor	01.0-00000.0-00000-83000-2210-4320000	1.0	36-VI	D	04-01-26		Burroughs High School (20 yrs/$284)
PUMPIAN-MINDLIN, Ilya	School Office Manager Adult School	11.0-63910.0-41101-27000-2410-5330000 11.0-63910.0-41102-27000-2410-5330000 11.0-63910.0-41104-27000-2410-5330000 11.0-63910.0-41106-27000-2410-5330000 11.0-00639.0-41100-27000-2410-5330000	.10 .30 .30 .20 .10	43-VI	A	04-01-26		Burbank Adult School ($15 yrs/$229)
Change of Assignment – Classification/Location/FTE								
ARELLANO, Celina	Adult English Language Learner/Office Specialist I	11.0-63910.0-41102-27000-2410-5330000	1.0	35-VI	E	04-01-26		Burbank Adult School
NAVA, Armando	Paraeducator – Severely Impaired	01.0-65000.0-57602-11104-2110-3220000	.8438	45-III	D	08-19-2024		Special Education
Election – Monthly								
HEROD, Kyla	Campus Supervisor-Elementary	01.0-00000.0-11100-10009-2910-2160000	.5338	35-1	D	04-15-26		Washington Elementary
MEZA, Jean	Paraeducator English Language Learner	01.0-01500.0-11119-10000-2110-3200000	.75	35-1	D	04-22-26		Luther Middle School
Election – Hourly								
ARIAS, Gerardo	Behavior Intervention Assistant	01.0-65000.0-57601-11905-2130-7440000		45-VI	D	04-01-26	05-29-26	Special Education

Basis: A= 12 months, B= 11 months, C= 10 months, D= 9 months, E= Adult School employee working less than 10 months, F= Short-term employees, assigned to provide services which will not be needed on a continuing basis, G= Substitute, H= Long term substitute, I= Temporary reclassification.

Name	Position	Program/Site	%Time FTE	Range & Step	Basis	Effective Date	Ending Date	Remarks
Election – Hourly (Continued)								
AZNAVURYAN, Syuzanna	Counseling Assistant	01.0-00000.0-00000-31100-2230-3200000		37-III	C	04-13-26	04-14-26	Luther Middle School
AZNAVURYAN, Syuzanna	Counseling Assistant	01.0-00000.0-00000-31100-2230-3200000		37-III	C	04-16-26	04-16-26	Luther Middle School (additional assignment)
BROOKS, Mary	Guidance/Program Technician II	01.0-00000.0-00000-31100-2240-3220000		42-VI	B	03-28-26	03-28-26	Muir Middle School
CARRASCO, Janel	Campus Supervisor	01.0-00000.0-00000-83000-2940-4320000		36-VI	D	04-03-26	04-03-26	Burroughs High School
CARRASCO, Janel	Campus Supervisor	01.0-90904.0-17023-83000-2940-4320000		36-VI	D	04-04-26	04-04-26	Burroughs High School (additional assignment)
CASTILLO, Sharon	Food Service Assistant (Substitute)	13.0-53100.0-00000-37000-2230-2150000		$19.06	F	04-06-26		Human Resources
CHANTA, Carlos	At Risk Intervention Specialist	01.0-00000.0-00000-83000-2230-3220000		53-VI	D	03-28-26	03-28-26	Muir Middle School
DI DONATO, Casey	Campus Supervisor	01.0-00000.0-00000-83000-2240-3220000		36-VI	D	03-28-26	03-28-26	Muir Middle School
FELIPE, Barbara	School Office Manager Middle School	01.0-00000.0-00000-27000-2440-3220000		43-VI	A	03-28-26	03-28-26	Muir Middle School
GUEFFROY, Katherine	Educational Interpreter I Deaf and Hard of Hearing	01.0-65000.0-57602-11104-2140-7440000		55-VI	D	04-01-26	05-31-26	Burbank High School
GUIDO MARQUEZ, Angie	Paraeducator – Special Education	01.0-00000.0-00000-83000-2230-3220000		38-VI	D	03-28-26	03-28-26	Muir Middle School
GUILLEN, Jeniffer	Health Services Assistant (Substitute)	01.0-00000.0-00000-31400-2260-7720000		41-I	F	04-20-26		Human Resources
HAWA, Sara	Paraeducator – Special Education	01.0-00000.0-00000-83000-2230-3220000		38-IV	D	03-28-26	03-28-26	Muir Middle School
HOVSEPYAN, Elma	Behavior Intervention Assistant	01.0-65000.0-57601-11905-2140-7440000		45-VI	D	04-11-26	04-11-26	Special Education
KELLEY, Sandra	Counseling Assistant	01.0-00000.0-00000-27000-2230-3220000		37-VI	B	03-28-26	03-28-26	Muir Middle School

Basis: A= 12 months, B= 11 months, C= 10 months, D= 9 months, E= Adult School employee working less than 10 months, F= Short-term employees, assigned to provide services which will not be needed on a continuing basis, G= Substitute, H= Long term substitute, I= Temporary reclassification.

Personnel Report No. 25-26-17 May 7, 2026 Classified Personnel

Name	Position	Program/Site	%Time FTE	Range & Step	Basis	Effective Date	Ending Date	Remarks
Election – Hourly (Continued)								
KHACHATOURIANS, Klara	Paraeducator – English Language Learner	01.0-00000.0-00000-27000-2440-3220000		37-VI	D	03-28-26	03-28-26	Muir Middle School
KUKAWSKI, John	Campus Supervisor	01.0-00000.0-00000-83000-2240-3220000		36-VI	D	03-28-26	03-28-26	Muir Middle School
MAGALLANES, Josephine	Campus Supervisor	01.0-90904.0-17023-83000-2940-4320000		36-VI	D	04-04-26	04-04-26	Burroughs High School
MAGALLANES, Josephine	Campus Supervisor	01.0-90904.0-17023-83000-2940-4320000		36-VI	D	04-18-26	04-18-26	Burroughs High School (additional assignment)
MORA, Norberto	Safety & Utility Custodian	11.0-63910.0-41102-82100-2230-5330000 11.0-63910.0-41104-82100-2230-5330000 11.0-63910.0-41106-82100-2230-5330000 11.0-00639.0-41100-82100-2230-5330000 11.0-63910.0-41102-83000-2230-5330000 11.0-63910.0-41104-83000-2230-5330000 11.0-63910.0-41106-83000-2230-5330000 11.0-00639.0-41100-83000-2230-5330000	.17 .23 .05 .05 .18 .22 .05 .05	39-VI	C	01-05-26	06-10-26	Burbank Adult School
PEREZ, Betty	School Office Manager Middle School	01.0-00000.0-00000-27000-2440-3210000		43-I	A	04-13-26	04-17-26	Huerta Middle School
SHAHBAZIAN, Shakeh	Community Resource Assistant	01.0-00000.0-00000-27000-2440-3220000		37-VI	D	03-28-26	03-28-26	Muir Middle School
TRONCOSO, Kaila	Visual & Performing Arts Instructor	01.0-67700.3-11100-10000-2170-2150000		$50.00	F	01-12-26	05-31-26	Stevenson Elementary
REED, Rachel	Paraeducator – Special Education	01.0-00000.0-00000-83000-2230-3220000		38-III	D	03-28-26	03-28-26	Muir Middle School
WAHE, Tyler	Campus Supervisor	01.0-00000.0-00000-83000-2940-3200000		36-I	D	04-11-26	04-11-26	Luther Middle School

Signature _____

Title: Oscar Macias, Ed.D, Interim Superintendent

Basis: A= 12 months, B= 11 months, C= 10 months, D= 9 months, E= Adult School employee working less than 10 months, F= Short-term employees, assigned to provide services which will not be needed on a continuing basis, G= Substitute, H= Long term substitute, I= Temporary reclassification.

Burbank Unified School District

Instructional Services

REPORT TO THE BOARD

TO:	Members of the Board of Education
FROM:	Peter Knapik, Assistant Superintendent of Educational Services
PREPARED BY:	Laura Flosi, Director of Child Care Programs
SUBMITTED	Janette Troncoso, Administrative Secretary
BY: DATE:	May 7, 2026
SUBJECT:	Approval to Amend Agreement with Childcare Careers LLC and The Education Team

---

Background:

Pursuant to Board Policy 3312, the Board of Education's designee may contract with consultants to provide services that District staff am not able to provide. The original contract was agreed upon on August 11, 2025. The current contract is effective July 1, 2025 through June 30, 2026 and was approved on August 7, 2025. The original agreement is not to exceed 200,000 for Around the Bell child care substitutes when Burbank Unified School District substitutes are not available.

Discussion and Issues:

There is a need to increase the contracted amount from $200,000 to $300,000 to be used to provide substitute childcare coverage for the remainder of the 2025-2026 school year.

Fiscal Impact:

The original cost of $200,000 was approved on August 11, 2025, will now be increased by $100,000 for a total not to exceed of $300,000 for Around the Bell child care substitutes when Burbank Unified School District substitutes are not available.

Recommendation:

Peter Knapik, Assistant Superintendent of Educational Services, recommends that the Board of Education agree to provide additional funding for Child Care Careers (CCC) to provide substitutes for child care centers for the remainder of the 2025-2026 school year not to exceed $300,000 (120-90602-0-11100-10000-5850-754-000-00) and that authority to sign the agreement be exercised pursuant to BUSD-AR 3314, as presented.

K#0001214

(2)

Service Agreement

ChildCare Careers
THE SOURCE FOR CHILD CARE STAFFING

NOTE: SIGNING THIS AGREEMENT DOES NOT OBLIGATE YOU TO USE OUR SERVICES.

This agreement is entered into by and between **ChildCare Careers, LLC** (hereafter "CCC") and "Customer" (named below). CCC and Customer agree as follows:

1. A four (4) hour minimum service commitment each day is required for each employee requested from CCC. Customer will pay for services under four (4) hours at the four (4) hour minimum fee.

2. Customer will pay the four (4) hour minimum if a request for service from CCC is cancelled within the 24 hours prior to the designated time of service. Any request for cancellation will be effective only if communicated to the **ChildCare Careers office.** Notice to the temporary personnel is not adequate.

3. Customer will verify and approve the daily hours worked by means of an authorized signature if using a paper timecard or by use of a password if using online timecards. CCC will invoice Customer based on the verified and approved time worked and Customer agrees to pay said invoices.

4. Customer will promptly pay all invoices for services rendered according to the then current CCC fee schedule as billed on a weekly basis. Overtime will be billed and paid at time and a half. If an invoice is not paid within 30 days of the invoice date then Customer will pay a late payment fee of 5% of the invoice amount plus a finance charge equal to the lesser of 1.5% per month or the maximum legal rate.

5. Customer will instruct and supervise the CCC employee with respect to his/her responsibilities and compliance with the procedures and policies of Customer. Customer will not ask or authorize CCC employee to operate any motor vehicles or administer any medication. Customer represents, warrants and agrees that Customer is, and at all times during the term of this agreement will be, in compliance with all governmental laws, rules, ordinances and regulations applicable to Customer and its business.

6. Customer acknowledges that CCC has incurred considerable expense in the recruitment, screening, and training of its employees and suffers a material economic loss when they are no longer available for assignments. Should Customer hire, or in any way utilize the services of (except through CCC), a current or former CCC employee introduced to Customer by CCC (a "Candidate") within one (1) year of the Candidate's last assignment at any Customer location, then Customer will pay CCC a placement fee according to CCC's then current fee schedule. Customer will notify CCC in writing and pay the placement fee prior to hiring a Candidate or utilizing a Candidate's services in any way except through CCC. Customer agrees that the placement fee shall be doubled if Customer fails to provide written notice prior to hiring. An employee's resignation from CCC does not relieve Customer of the obligation to pay the placement fee. Placement fees are non-refundable regardless of the duration of Candidate's employment with Customer.

7. In any action or proceeding involving a dispute between CCC and Customer arising out of this Agreement, the prevailing party shall be entitled to recover its costs and attorneys fees. This agreement shall be binding on the successors and assigns of the parties. This agreement may be amended only by a written agreement signed by the parties. This agreement constitutes the entire agreement between the parties with respect to the subject matter hereof. The terms of this agreement shall be deemed accepted by CCC, and a binding agreement created between CCC and Customer on the terms set forth herein, upon CCC providing its employees to Customer.

Entity Name (Customer): Burbank Unified School District
Full Legal Name of Entity (Name of Corporation, LLC, or Partnership. NOT the trade name of the school.)

By: Peter Knapik
Signature

Title: Assistant Superintendent

Print Name: Peter Knapik
Authorized Representative of Customer (Print Name)

Date: 8/11/25

ChildCare Careers
THE SOURCE FOR CHILD CARE STAFFING
Corporate Office: 2000 Sierra Point Pkwy, Suite 702 • Brisbane, CA• 94005
Orders: (877) 222-6070 • Inquiries: (877) 888-4173

Los Angeles County Price List

*** Effective July 1, 2025 ***

Employee Category	Minimum Qualifications	Hourly Rates 6 or More Hours/Day	Hourly Rates Less than 6 Hours/Day
• Teacher's Aide	• 0 to 5 ECE units	32	33
• Assistant Teacher	• 6-11 ECE units OR • Assistant Teacher Permit*	34	35
• Experienced Teacher	• 12+ ECE units OR • Associate Teacher Permit*	35	36
• Teacher Permit (No degree)	• Teacher Permit*	36	37
• AA Degree	• AA Degree (in any field) **AND** • Teacher Permit* or higher	37	38
• !3A Degree	• BA Degree or higher (in any field) **AND** • Teacher Permit* or higher	39	40

* *Permits refer to Child Development Permits from the California Commission on Teacher Credentialing*

NOTE: Prices include all payroll taxes, workers' compensation costs, benefits costs, liability insurance costs (including general, professional, employment practices and sexual l')'lisconduct liability), recruitment costs, and HR/administrative costs. There are no additional fees or taxes of any kind. ChildCare Careers reserves the right to adjust its prices with 30 days written notice.

Burbank Unified School District
Instructional Services

REPORT TO THE BOARD

TO:	Members of the Board of Education
FROM:	Peter Knapik, Assistant Superintendent of Educational Services
PREPARED BY:	Peter Knapik, Assistant Superintendent of Educational Services
SUBMITTED BY:	Laura Erisman, Administrative Secretary
DATE:	May 7, 2026
SUBJECT:	Approval of Instructional Consultant Services

Background:
The purpose of the Instructional Consultant Services is to enrich student learning. Consultants are selected based on their qualifications regarding specific subject areas. When a consultant is selected, the consultant company/organization must complete the required paperwork for the district to ensure that district students receive the services they require. The Board of Education must approve all consultant requests before services are rendered.

Discussion and Issues:
Sites submit the required paperwork to Instructional/Educational Services. Work must not begin until the site receives confirmation of Board approval from Instructional/Educational Services. If the Consultant assignment requires unsupervised contact with the student(s) during the contract period, the Consultant must provide Department of Justice fingerprint clearance through the District's Human Resources Services.

Fiscal Impact:
See Attached

Recommendation:
Peter Knapik, Assistant Superintendent of Educational Services, recommends that the Board of Education approve the instructional consultant services for on-site student learning support and staff development and exercise authority to sign the agreements pursuant to BUSD-AR 3314, as presented.

BURBANK UNIFIED SCHOOL DISTRICT
INSTRUCTIONAL SERVICES
APPROVAL OF INSTRUCTIONAL CONSULTANT SERVICES

Board Meeting Date: May 7, 2026

Site	Name	Purpose	Dates	Cost	Appropriation Number
Walt Disney Elementary	Performing Arts Center of Los Angeles County	Assembly from Music Center	8/17/26	$75	010-00000.0-11100-10000-5840-2010000
Instructional Services	Auntie M Creative Consultant	Audio Equipment and Technicians for Graduations at Memorial Field	5/27/26-5/29/26	$9020.80	010-00000.0-11100-10000-5611-7420000
Jefferson Elementary	iDJLA, LLC	Providing DJ services/music for 5th grade promotion party	5/27/26	$500.00	010-90870.0-00000-27000-5850-2060000
Jefferson Elementary	Rockin for the Arts	Rock music residency for Jefferson students. They complete instruction and then perform as a rock band for a culminating performance. Fundraising committee's biggest fundraiser.	8/17/26-9/19/26	$1400	010-90870.0-11100-10000-5810-2060000
Emerson Elementary	Kenyan Armitage	Murals for Emerson Elementary extending art beyond the confines of gallery walls.	5/25/26-6/1/26	$20,000	010-90704.0-11100-10000-4310-2030000 010-90820.0-11100-10000-5810-2030000
Edison Elementary	Luke Anderson	Coach Luke will work with all classes individually to teach various sports, games and activities. Will reinforce proper play of games and remind them of rules and encourage sportsmanship during lunchtime.	8/17/26-5/24/26	$3300	010-90870.0-11100-10000-5810-2020000
Miller Elementary	LabRats San Diego	LabRats San Diego will provide a Family STEM Night for 100 students in grades TK-5 and their families. Students will rotate through four STEM demonstration stations for a hands-on experience.	5/19/26	$4750	010-30100.2-11100-24950-5810-210000 010-42030.0-47600-24950-5810-210000
Roosevelt Elementary	The Imagination Machine, LLC	To provide an engaging and interactive ELA and Theater Arts assembly to all students at Rosevelt Elementary (grades TK-5). Imagination Machines selects stories from each grade and adapts them into a complete production with professional actors that is performed at the school's assembly.	5/14/26	$2489.47	01.0-67700.0-11100-10000-5810-2140000

BURBANK UNIFIED SCHOOL DISTRICT
1900 W. Olive Avenue • Burbank, CA 91506-2460 • (818) 729-4400

AGREEMENT FOR CONSULTANT SERVICES

This Agreement, made and entered into this 04 day of April, 2026 by and between the **Burbank Unified School District**, hereinafter referred to as "District", and The Music Center hereinafter referred to as "Consultant."

[redacted]

Performing Arts Center of Los Angeles County 213-972-7211
Payee's Name (Person or Company) Social Security or Federal I.D. # Phone Number

Mailing Address: [redacted]
City

Sponsoring Administrator: Tracy Shah Principal Walt Disney Elem
Print Name Title Location

Date Submitted to Board: 4/22/26 Funding Source (Resource): 010-00000-0-11100-10000-5840-201-0000

STRS/PERS Member: Yes No

The assignment **will** ☐ **will not** ☑ require Consultant to work with pupil(s) unsupervised in a program sponsored by the District during the contract period. If it does, the Consultant will be contacted by HR and provide the DOJ & FBI clearance form to complete as required by AB346. The consultant will be responsible for associated costs of fingerprinting. **Consultant shall not begin service until HR receives clearance.**

WITNESSETH:

WHEREAS, the District is authorized pursuant to Education Code section 35160 and Government Code Section 53060 to contract for the services of consultants;
WHEREAS, the Consultant is especially trained, experienced, and competent to provide such services;
WHEREAS, in consideration of the mutual promises of the parties, hereto, the District hereby retains the Consultant upon the terms and conditions hereinafter set forth, and the Consultant hereby accepts said retention and agrees to perform the services hereinafter mentioned, upon said terms and conditions;
NOW THEREFORE, the parties mutually agree as follows

1. The Consultant agrees to perform the following services for the District, at a rate of $ 75.- per hour ☐ / per day ☒ / per session ☐ for a total not to exceed $ 75.-, including benefits.
2. The term of the Agreement shall be the period commencing on 5/8/26 and terminating on 5/8/26
   a. Contracts shall not cross fiscal years.
3. Consultant will provide the services as listed in the Scope of Work following this agreement.
4. The Consultant shall submit invoicing on a monthly basis, or at the conclusion of this contract agreement to the BUSD Consultant Portal. The approving administrator of the time spent in providing the services and preparing the products required by this Agreement is a required component of the Consultant Portal Form. Consultant will be paid on a monthly basis or at the conclusion of this contract as in the agreement.
5. It is expressly understood and agreed to by both parties that the Consultant, while engaged in carrying out and complying with any of the terms and conditions of this contract, is an independent contractor and is not an officer, agent, or employee of the aforesaid District.

6. Consultant agrees to maintain insurance coverage sufficient to support its obligations under this Agreement, with minimum limits of liability not less than $1,000,000. Additional insurance coverage for Workers' Compensation and/or Automobile Liability may be required.
7. Consultant agrees to hold harmless, defend, and indemnify the District, its Governing Board, administrators, directors, employees, agents, affiliates, successors, and assigns from and against any and all losses, damages, liabilities, claims, actions, judgments, court costs, and legal or other expenses (including, without limitation, reasonable legal fees) (collectively, "Claims") that the District may suffer or incur as a result of or arising directly or indirectly as a result of Consultant's performance or failure to perform services under this Agreement.
8. This agreement may be terminated at any time based upon the mutual agreement of the parties hereto. This agreement may also be terminated immediately by the District should the Consultant breach this agreement or fail to perform the required services in a satisfactory manner.
9. Consultant agrees to pay all federal, state, and local taxes and fees that are owed as a result of payments made to Consultant pursuant to this agreement. Consultant agrees to indemnify and hold harmless the District from any and all costs, loss, or liability whatsoever arising from or caused by any challenge to the payments made to Consultant pursuant to this agreement, including but not limited to any liabilities or penalties assessed or levied by any and all local, state, or federal taxing authorities against the District.
10. Consultant agrees, if requested by the District, to furnish a conditional waiver and release together with invoices, and an unconditional waiver and release within 10 days of receipt of payment of such invoices.
11. Consultant agrees to ensure that they do not exceed the applicable earnings limitation under CALPERS or STRS and agrees to be solely responsible for any actions taken by CALPERS or STRS as a result of exceeding the applicable earnings limitation.

Burbank Unified School District of Los Angeles County
IN WITNESS THEREOF, the parties hereto have set their hands on the day and in the month and year first above written.

	Keith Wyffels
Administrator	Consultant
Title	[redacted]
Board Approval Date	City, State ZIP

Instructions: The Consultant is to sign and return two copies to the sponsoring administrator's office. After the BUSD Executive Cabinet has reviewed, this will proceed for Board approval. Once Board approved, a requisition should be entered with this attached agreement.

STATEMENT OF WORK

Program/Project Purpose:
School-wide celebration for cultural awareness.

Basis for Request:
Disney won an assembly from the Music Center. Practically free - assemblies cost $1500 and we are discounted to $75.—

Background/Scope/Objectives:
The Music center presents the Korean Classical Music & Dance assembly.

Deliverables/Milestones:
A rare opportunity for students to experience this cultural event while we celebrate Asian American & Pacific Islander month.

Invoice Approver:
TracyShah@burbankusd.org

Timeline:
Friday, May 8, 2026

Payment Terms:
1 check following assembly.

THE MUSIC CENTER

March 17, 2026

Jennifer Halligan, Teacher
Walt Disney Elementary
1220 West Orange Grove Avenue
Burbank CA 91506-2016

Dear Jennifer,

Thank you for contacting us to arrange a program with The Music Center.

Listed below is a summary of the services you have requested, which includes an itemized estimate of costs. Please review the dates and times for each artist. If you find a discrepancy, please let us know so that we can make any needed adjustments. In order for us to confirm your project and begin services, we must receive your completed verification of funding within 14 days. Program dates will be released if you do not fill out the web form (linked in the email) at the end of 14 days.

Korean Classical Music and Dance Company	
Single Assembly	$1575.00
Friday, May 8, 2026 at 8:45 AM	
Less Blue Ribbon	$-1,500.00
Estimated Project Total	**$75.00**

- *This document is provided as an estimate of the total cost for this project and should be used for budgeting purposes. Applicable invoice(s) will be provided separately when services have been rendered.*
- *Fees paid by the organization for our services cover only a portion of program production costs. Generous contributions from individuals, corporations, foundations and government agencies cover the balance.*
- *Events may be cancelled or rescheduled by the organization with at least two business days' notice to The Music Center without penalty. The organization will be charged for any event cancelled with less than two business days' notice.*
- *The Music Center artists have agreed to share their talents with the organization for rates far below their standard fees. These professional artists may occasionally find it necessary to initiate a change in scheduled events to accommodate a public engagement. Should this occur, we will work with you to reschedule your event as needed.*

We look forward to working with you this year. Please call me at any time should you have questions or need additional information.

Sincerely,

Monk Turner
The Music Center Performing Artists in Schools and Neighborhoods

Project # 26OT6011878-5

THE MUSIC CENTER
L.A.'s Performing Arts Center

135 N. Grand Avenue
Los Angeles, CA 90012
(213) 972-7211

JOIN OUR MAILING LIST

© 2025 Music Center. All Rights Reserved.
Privacy Policy Terms & Conditions Guest Agreement

This website utilizes technologies such as cookies to enable essential site functionality, as well as for analytics, personalization, and targeted advertising. Privacy Policy

BURBANK UNIFIED SCHOOL DISTRICT

1900 W. Olive Avenue • Burbank, CA 91506-2460 • (818) 729-4400

AGREEMENT FOR CONSULTANT SERVICES

This Agreement, made and entered into this 16 of April , 20 26 by and between the **Burbank Unified School District,** hereinafter referred to as "District", and Auntie M Creative Consultants, Inc. hereinafter referred to as "Consultant."

Payee's Name Auntie M Creative Consultants, Inc. Daytime Phone Number [redacted]

Email Address www.auntiem.com

Mailing Address [redacted]

Sponsoring Administrator Peter Knapik, Assistant Superintendent of Educational Services

Board Approval Date 5/7/26

Account String 01.0-00000.0-11100-10000-5611-7420000

The assignment ☐ **will** or ☒ **will not** require Consultant to work with pupil(s) unsupervised in a program sponsored by the District during the contract period. If it does, the Consultant will be contacted by HR and provided the DOJ & FBI form to complete as required by AB346 and will be responsible for associated costs. **Consultant shall not begin service until HR receives clearance.**

Retired Employee: Please check if you belong to _____ calPERS _____cal STRS Retirement Date _____

WITNESSETH:

WHEREAS, the District is authorized pursuant to Education Code section 35160 and Government Code Section 53060 to contract for the services of consultants;

WHEREAS, the Consultant is especially trained, experienced and competent to provide such services;

WHEREAS, in consideration of the mutual promises of the parties, hereto, the District hereby retains the Consultant upon the terms and conditions hereinafter set forth, and the Consultant hereby accepts said retention and agrees to perform the services hereinafter mentioned, upon said terms and conditions;

NOW THERFORE, the parties mutually agree as follows:

1. The Consultant agrees to perform the following services for the District, at a rate of $ _____ per hour☐/ per day ☐/ per session☒ for a total not to exceed $ 9020.50 **Amount to include speaking fee, mileage and any additional fees.
2. The term of the Agreement shall be the period commencing on 5/27/26 and terminating on 5/29/26 .
3. Payment Terms: upon receipt of invoice
4. Consultant will provide the following services:

   Audio equipment and audio technicians for graduations at Memorial Field

5. The Consultant shall provide an invoice/Authorization for Payment of the time spent in providing the services and preparing the products required by this Agreement. Consultant will be paid at the conclusion of this contract unless otherwise stated in the payment terms above.
6. It is expressly understood and agreed to by both parties hereto that the Consultant, while engaged in carrying out and complying with any of the terms and conditions of this contract, is an independent contractor and is not an officer, agent or employee of the aforesaid District.
7. Consultant agrees to defend, indemnify, save, and hold harmless the District, its governing body, the individual members thereof, and all officers, agents and employees of the District from all loss, cost, and expense arising out of any liability or claim of liability for injury, damage, or loss sustained or claimed to have been sustained arising out of, or occurring as a result of Consultant's performance or failure to perform services under this Agreement.
8. This agreement may be terminated at any time based upon the mutual agreement of the parties hereto. This agreement may also be terminated immediately by the District should Consultant breach this agreement or fail to perform the required services in a satisfactory manner.
9. Consultant agrees to pay all Federal, State and Local taxes, and fees that are owed as a result of payments made to Consultant pursuant to this agreement. Consultant agrees to indemnify and hold harmless the District from any and all costs, loss, or liability whatsoever arising from or caused by any challenge to the payments made to Consultant pursuant to this agreement, including but not limited to any liabilities or penalties assessed or levied by any and all local, state, or federal taxing authorities against the District.
10. Consultant agrees to ensure that they do not exceed the applicable earnings limitation under CALPERS or STRS and agrees to be solely responsible for any actions taken by CALPERS or STRS as a result of exceeding the applicable earnings limitation.

Burbank Unified School District of Los Angeles County

IN WITNESS THEREOF, the parties hereto have set their hands on the day and in the month and year first above written.

_____ 4-17-2026

BUSD Authorized Signature/Title Date Consultant Auntie M Creative Consultants, Ir Date

Instructions: Consultant is to sign and return one copy to the sponsoring administrative site. Agreement will be submitted for Board Approval. After Board approval, a Purchase Req will be created. This Purchase Req will need to include the Agreement for Consultant Services, W9, and Board Approved coversheet uploaded on the Purchase Req. Revised 06/19

BURBANK UNIFIED SCHOOL DISTRICT
1900 W. Olive Avenue
Burbank, CA 91506-2460

THE UNDERSIGNED ACKNOWLEDGES SERVICES & AUTHORIZATION FOR PAYMENT:

Instructional Services — R0035533

School Site or Department — Req./PO Number

TO: **Burbank Unified School District**
Accounts Payable
1900 W. Olive Avenue
Burbank, CA 91506-2460

Payee's Name: Auntie M Creative Consultants

Retiree? (required) No X — If yes, circle: CalPERS or CalSTRS

[redacted]

Consultant's Signature

Date of service: 5/27/26-5/29/26

Amount to be paid: $9020.50 — Hours worked: _____ (required if retiree)

Payment Terms: upon receipt of invoice

Appropriation No.: 01.0-00000.0-11100-5611-7420000

APPROVED BY THE BOARD: _____

_____ _____

Signature-Principal/Sponsoring Administrator — Date
Certifying Receipt of Services & Approval of Payment

AFTER COMPLETION OF SERVICE Submit the COMPLETED form with the following to Purchasing:
Enter Purchase Requisition in Smarte after Board approval
1) Attach invoice if available
2) W9 for fiscal year first payment
3) Completed/Signed Agreement or Contract
4) Attach all paperwork in Smarte when entering Purchase Requisition

July, 2019

STATEMENT OF WORK

Program/Project Purpose:

Audio equipment and technicians for graduations at Memorial Field

Basis for Request:

Background/Scope/Objectives:

To provide adequate audio for students and families.

Deliverables/Milestones:

Rental of microphones, speakers, audio technicians to successfully produce the graduation

Invoice Approver:

Peter Knapik

Timeline:

Load in 5/27/26 9:00 am Load out 5/29/26 8:30 pm

Payment Terms:

upon receipt of invoice

BURBANK UNIFIED SCHOOL DISTRICT

1900 W. Olive Avenue • Burbank, CA 91506-2460 • (818) 729-4400

AGREEMENT FOR CONSULTANT SERVICES

This Agreement, made and entered into this 15th of April, 2026 by and between the **Burbank Unified School District**, hereinafter referred to as "District", and Greg Cervantes (iDJLA, LLC) hereinafter referred to as "Consultant."

Payee's Name iDJLA, LLC Daytime Phone Number [redacted]

Email Addres [redacted]

Mailing Add [redacted]

Sponsoring Administrator Ron Young

Board Approval Date 5/7/26

Account String 010-90870-0-00000-27000-5850-206-0000-0000

The assignment ☐ **will** or ■ **will not** require Consultant to work with pupil(s) unsupervised in a program sponsored by the District during the contract period. If it does, the Consultant will be contacted by HR and provided the DOJ & FBI form to complete as required by AB346 and will be responsible for associated costs. **Consultant shall not begin service until HR receives clearance.**

Retired Employee: Please check if you belong to _____ calPERS _____cal STRS Retirement Date _____

WITNESSETH:

WHEREAS, the District is authorized pursuant to Education Code section 35160 and Government Code Section 53060 to contract for the services of consultants;

WHEREAS, the Consultant is especially trained, experienced and competent to provide such services;

WHEREAS, in consideration of the mutual promises of the parties, hereto, the District hereby retains the Consultant upon the terms and conditions hereinafter set forth, and the Consultant hereby accepts said retention and agrees to perform the services hereinafter mentioned, upon said terms and conditions;

NOW THERFORE, the parties mutually agree as follows:

1. The Consultant agrees to perform the following services for the District, at a rate of $ 500 per hour☐/ per day ■/ per session☐ for a total not to exceed $500 **Amount to include speaking fee, mileage and any additional fees.
2. The term of the Agreement shall be the period commencing on 5/27/2026 and terminating on 5/27/26.
3. Payment Terms: Due on reciept
4. Consultant will provide the following services:

   DJ for school Party/Dance

5. The Consultant shall provide an invoice/Authorization for Payment of the time spent in providing the services and preparing the products required by this Agreement. Consultant will be paid at the conclusion of this contract unless otherwise stated in the payment terms above.
6. It is expressly understood and agreed to by both parties hereto that the Consultant, while engaged in carrying out and complying with any of the terms and conditions of this contract, is an independent contractor and is not an officer, agent or employee of the aforesaid District.
7. Consultant agrees to defend, indemnify, save, and hold harmless the District, its governing body, the individual members thereof, and all officers, agents and employees of the District from all loss, cost, and expense arising out of any liability or claim of liability for injury, damage, or loss sustained or claimed to have been sustained arising out of, or occurring as a result of Consultant's performance or failure to perform services under this Agreement.
8. This agreement may be terminated at any time based upon the mutual agreement of the parties hereto. This agreement may also be terminated immediately by the District should Consultant breach this agreement or fail to perform the required services in a satisfactory manner.
9. Consultant agrees to pay all Federal, State and Local taxes, and fees that are owed as a result of payments made to Consultant pursuant to this agreement. Consultant agrees to indemnify and hold harmless the District from any and all costs, loss, or liability whatsoever arising from or caused by any challenge to the payments made to Consultant pursuant to this agreement, including but not limited to any liabilities or penalties assessed or levied by any and all local, state, or federal taxing authorities against the District.
10. Consultant agrees to ensure that they do not exceed the applicable earnings limitation under CALPERS or STRS and agrees to be solely responsible for any actions taken by CALPERS or STRS as a result of exceeding the applicable earnings limitation.

Burbank Unified School District of Los Angeles County

IN WITNESS THEREOF, the parties hereto have set their hands on the day and in the month and year first above written.

[signature]	4/15/26	Greg Cervantes	4/15/26
BUSD Authorized Signature/Title	Date	Consultant Greg Cervantes (iDJLA, LLC)	Date

Instructions: Consultant is to sign and return one copy to the sponsoring administrative site. Agreement will be submitted for Board Approval. After Board approval, a Purchase Req will be created. This Purchase Req will need to include the Agreement for Consultant Services, W9, and Board Approved coversheet uploaded on the Purchase Req.

Revised 06/19

STATEMENT OF WORK

Program/Project Purpose:

5th Grade Promotion Activities

Basis for Request:

Provide DJ Services/Music for 5th grade promotion party.

Background/Scope/Objectives:

Has provided services for us previously.

Deliverables/Milestones:

Music during 5G party (1 time)

Invoice Approver:

Ron Young, Principal

Timeline:

May 2026

Payment Terms:

Upon delivery of service



Bio

IDJLA (International Dj's of Los Angeles) is a Los Angeles based DJ service that has been in business for over 20 years. We pride ourselves in delivering high quality DJ and Entertainment services using only the latest in professional sound equipment and lighting.
We specialize in weddings, quiceanera's, school dances, and corporate events, but have significant experience with retirement, birthday, and graduation parties, school fiestas, and festivals.

We have provided, and still provide to this day, our services to many big name companies and organizations such as: Bob Hope Airport, Holiday Inn, Kaiser, The Burbank Beer Festival, Rotary International and Knights of Columbus.

We also have worked with countless schools and school districts such as: St Finbar, Bellarmine Jefferson High, Christ The King Church, Red Oak Schools, Holy Trinity Elementary School, The Help Group Schools, Montebello School district, and Beverly Hills School District.

Our prices may vary depending on venue, size, date and specific requirements .

For a specific quote please send all inquiries to:

Greg Cervantes
[redacted]

Please also follow us on Facebook and Instagram @ IDJLA

BURBANK UNIFIED SCHOOL DISTRICT
1900 W. Olive Avenue • Burbank, CA 91506-2460 • (818) 729-4400

AGREEMENT FOR CONSULTANT SERVICES

This Agreement, made and entered into this 26th day of March, 2026 by and between the **Burbank Unified School District**, hereinafter referred to as "District", and Rockin for the Arts hereinafter referred to as "Consultant."

Rockin for the Arts [redacted]
Payee's Name (Person or Company) Social Security or Federal I.D. # Phone Number

Mailing Address: [redacted]
City State Zip

Sponsoring Administrator: Ron Young, Principal Thomas Jefferson
Print Name Title Location

Date Submitted to Board: May 7th Funding Source (Resource): 01090830111001000058102068000

STRS/PERS Member: Yes No

The assignment **will** ☐ **will not** ☒ require Consultant to work with pupil(s) unsupervised in a program sponsored by the District during the contract period. If it does, the Consultant will be contacted by HR and provide the DOJ & FBI clearance form to complete as required by AB346. The consultant will be responsible for associated costs of fingerprinting. **Consultant shall not begin service until HR receives clearance.**

WITNESSETH:

WHEREAS, the District is authorized pursuant to Education Code section 35160 and Government Code Section 53060 to contract for the services of consultants;
WHEREAS, the Consultant is especially trained, experienced, and competent to provide such services;
WHEREAS, in consideration of the mutual promises of the parties, hereto, the District hereby retains the Consultant upon the terms and conditions hereinafter set forth, and the Consultant hereby accepts said retention and agrees to perform the services hereinafter mentioned, upon said terms and conditions;
NOW THEREFORE, the parties mutually agree as follows

1. The Consultant agrees to perform the following services for the District, at a rate of $_____ per hour ☐ / per day ☐ / per session ☒ for a total not to exceed $ 1400, including benefits.
2. The term of the Agreement shall be the period commencing on 8/13/26 and terminating on 9/19/26
   a. Contracts shall not cross fiscal years.
3. Consultant will provide the services as listed in the Scope of Work following this agreement.
4. The Consultant shall submit invoicing on a monthly basis, or at the conclusion of this contract agreement to the BUSD Consultant Portal. The approving administrator of the time spent in providing the services and preparing the products required by this Agreement is a required component of the Consultant Portal Form. Consultant will be paid on a monthly basis or at the conclusion of this contract as in the agreement.
5. It is expressly understood and agreed to by both parties that the Consultant, while engaged in carrying out and complying with any of the terms and conditions of this contract, is an independent contractor and is not an officer, agent, or employee of the aforesaid District.

6. Consultant agrees to maintain insurance coverage sufficient to support its obligations under this Agreement, with minimum limits of liability not less than $1,000,000. Additional insurance coverage for Workers' Compensation and/or Automobile Liability may be required.
7. Consultant agrees to hold harmless, defend, and indemnify the District, its Governing Board, administrators, directors, employees, agents, affiliates, successors, and assigns from and against any and all losses, damages, liabilities, claims, actions, judgments, court costs, and legal or other expenses (including, without limitation, reasonable legal fees) (collectively, "Claims") that the District may suffer or incur as a result of or arising directly or indirectly as a result of Consultant's performance or failure to perform services under this Agreement.
8. This agreement may be terminated at any time based upon the mutual agreement of the parties hereto. This agreement may also be terminated immediately by the District should the Consultant breach this agreement or fail to perform the required services in a satisfactory manner.
9. Consultant agrees to pay all federal, state, and local taxes and fees that are owed as a result of payments made to Consultant pursuant to this agreement. Consultant agrees to indemnify and hold harmless the District from any and all costs, loss, or liability whatsoever arising from or caused by any challenge to the payments made to Consultant pursuant to this agreement, including but not limited to any liabilities or penalties assessed or levied by any and all local, state, or federal taxing authorities against the District.
10. Consultant agrees, if requested by the District, to furnish a conditional waiver and release together with invoices, and an unconditional waiver and release within 10 days of receipt of payment of such invoices.
11. Consultant agrees to ensure that they do not exceed the applicable earnings limitation under CALPERS or STRS and agrees to be solely responsible for any actions taken by CALPERS or STRS as a result of exceeding the applicable earnings limitation.

Burbank Unified School District of Los Angeles County
IN WITNESS THEREOF, the parties hereto have set their hands on the day and in the month and year first above written.

	Laura Wynne
Administrator	Consultant
Title	[redacted]
Board Approval Date	City, State ZIP

Instructions: The Consultant is to sign and return two copies to the sponsoring administrator's office. After the BUSD Executive Cabinet has reviewed, this will proceed for Board approval. Once Board approved, a requisition should be entered with this attached agreement.

STATEMENT OF WORK

Program/Project Purpose:

Jefferson's Kidchella Program 2026

Basis for Request:

Each year we partner with Rockin for the Arts to complete a rock music residency for our students. They complete instruction and then perform as a rock band for a culminating performance. This is our fundraising committee's biggest fundraiser.

Background/Scope/Objectives:

Program has existed for many years at Jefferson.

Deliverables/Milestones:

Music instruction & live performance.

Invoice Approver:

Ron Young

Timeline:

August - September 2026

Payment Terms:

see consultant forms.

LAURA WYNNE

[redacted]

Qualifications Summary:
A qualified administrator accustomed to executives at all levels and fast-paced environments demanding strong organizational, communication and interpersonal skills. Trustworthy, ethical, discreet and committed to superior performance. I am confident and poised, detail-oriented and resourceful in completing projects and am able to multi-task effectively. Currently employed in entrepreneurial sector however interested in returning to corporate environment and having bigger impact on society.

Burbank Music Academy June 2007 - Present
Executive Director (Managing Director June 2007-January 2009)

- Manage day-to-day operations of a music academy with 500+ students including staff schedules, teaching professionals and class curriculum. Accounting and fiscal management including preparation of quarterly and annual P&L reports for Partnership Meetings
- Special event design, coordination and implementation including live music events on and off site.
- Produce elementary and middle school events working with principals, students, parent groups.
- Coordinate grass route promotional events for marketing exposure.
- Developed human resources policies, procedures, training and recruitment programs to ensure client satisfaction and staff experiences.
- Responsible for financial stability and development of programs including summer camp and group classes to expand client base & increase attendance. Created alternative revenue streams.
- Directed all aspects of operations, including human resources, marketing, budgeting, quality improvement, community engagement, and risk assessment strategy.
- Served as community representative spokesperson.

Cheers2U Enrichment January 2007-June 2007
Enrollment Director & Personal Assistant

- Developed marketing materials for school based educational enrichment for grades Pre K-8 including programs, class schedules, teachers assignments and class rolls.
- Coordinated meetings with prospective school principals and coordinators presenting current and new programs. Maintained email correspondence, appointment calendars, class attendance, supplies
- Created database, procedures and systems for administrating enrichment business including payroll for subcontractors, accounts payable invoices for schools & clients.

Parker-Anderson Enrichment Opportunities June 2005-January 2007
Admissions & Enrollment Manager

- Coordination of educational & recreational programs at 45 different elementary school locations.
- Extensive communication with principals, administrators, parents and students.
- Interviewed, hired, trained, scheduled and evaluated teachers and all staff in programs.
- Managed and developed programs at all schools tailoring programs for each school.
- Ensured students, parents and school representatives received top-notch customer service.

Galpin Motors, Inc. April 2004 – June 2005
Executive Secretary to Vice President(s), President

- Assisted three extremely busy executives in retail sales/service oriented business. Schedule appointments, staff meetings, special appearances. Arrange extensive travel and prepare detailed itineraries.
- Coordinated & assisted in special events, shows, projects for commercial & video production.
- Managed all calls, meetings, correspondence, sort and return emails in a very high volume office.
- Marketing & advertising media meeting attendance, input and follow up of ideas discussed.
- Assist with speech writing and presentations, prepare meeting notes and follow up on assignments.

Los Angeles Dodgers December 2002 – October 2003

Executive Assistant, Stadium Operations (under FOX Ownership)

(Assistant to Vice President and Director of Stadium Operations)

- Communicate all stadium operation issues with staff and assist with resolving issues.
- Arrange all outside vendor access and ensure smooth entrance to VIP's.
- Compose high profile correspondence going to MLB, LAPD, press, sponsors & clients.
- Coordinate meetings, prepare agendas, reserve appropriate facilities and gate access lists.
- Organize and maintain file system of all games, special events issues, resolve actions, etc.
- Manage new badge system and issue security badges for all staff, vendors and players families.
- Supervise Administrative Assistants and assist other departments as needed.

ABC, Inc. (Temp/Contract Position) October 2002 – January 2003

Secretary, Broadcast Standards & Practices

Administrative support for busy Vice President and ten Programming Editors.

- Complied daily data for all television programming and issued TV Parental Guidelines Reports.
- Maintained communication with Vice President and other executives with call rolling, email, etc.
- Administrative support to all programming editors; compose high profile correspondence.
- Attend all weekly programming meetings to discuss upcoming programming issues.
- Monthly and annual minority actor programming collection and reporting.

Ceiva Logic, Incorporated June 2001- September 2002

Executive Assistant to CEO, President & Chief Marketing Officer

Administrative support for three busy executives of internet based firm

- Managed meeting schedules of two former Disney executives in new start up venture.
- Prepared extensive travel arrangements including international travel with multi-city stops and detailed itineraries to potential vendor meetings.
- Manage special projects: West Wing Emmy Awards, Nike Showcase Event, & Invisalign.
- Liaison between clients, staff and shareholders, call screening and call rolling.
- Post 9/11 additional duties due to staff layoffs: demo setups, office management, etc.

Grand American, Incorporated April 1994 – June 2001

Executive Assistant & Office Manager to President & CEO

- Prepared all correspondence, property management correspondence, and meeting notes.
- Coordinated meetings with prospective tenants, lease application & documentation, coordinate TI.
- Arranged extensive multi-city travel for Owner and President and prepared detailed itineraries.
- Performed research for possible future development in other areas, background checks & reports.
- Prepared meeting and presentation materials for potential leasing anchors.
- Transcription and quick note taking in discussions with executives.
- Coordinate repairs and resolve tenant issues.

Traits/Other

- Bachelors Degree – CSULB
- Quickbooks, MS Office – Outlook, Word, Excel, Power Point
- MAC & PC literate, text messaging, internet savvy, Iphone experience, Google Suite, Instagram, Facebook, Twitter platforms, Timberline Software, Some SAP
- Learning Italian, refreshing French language
- Quick to pick up new software and really excellent memory (it is one of my super powers!)
- DOJ/FBI clearance – SSBI eligible

BURBANK UNIFIED SCHOOL DISTRICT
1900 W. Olive Avenue • Burbank, CA 91506-2460 • (818) 729-4400

AGREEMENT FOR CONSULTANT SERVICES

This Agreement, made and entered into this 13 day of March, 202 by and between the **Burbank Unified School District,** hereinafter referred to as "District", and _____ hereinafter referred to as "Consultant."

Kenyan Armitage [redacted] [redacted]
Payee's Name (Person or Company) Social Security or Federal I.D. # Phone Number

Mailing Address: [redacted]
City State Zip

Sponsoring Administrator: Jennifer Almer, Principal, Emerson
Print Name Title Location

Date Submitted to Board: 5/7/26 Funding Source (Resource): BAEF AND PTA

STRS/PERS Member: Yes No

The assignment **will** ☐ **will not** ■ require Consultant to work with pupil(s) unsupervised in a program sponsored by the District during the contract period. If it does, the Consultant will be contacted by HR and provide the DOJ & FBI clearance form to complete as required by AB346. The consultant will be responsible for associated costs of fingerprinting. **Consultant shall not begin service until HR receives clearance.**

WITNESSETH:

WHEREAS, the District is authorized pursuant to Education Code section 35160 and Government Code Section 53060 to contract for the services of consultants;
WHEREAS, the Consultant is especially trained, experienced, and competent to provide such services;
WHEREAS, in consideration of the mutual promises of the parties, hereto, the District hereby retains the Consultant upon the terms and conditions hereinafter set forth, and the Consultant hereby accepts said retention and agrees to perform the services hereinafter mentioned, upon said terms and conditions;
NOW THEREFORE, the parties mutually agree as follows

1. The Consultant agrees to perform the following services for the District, at a rate of $ 20,000.00 per hour ☐ / per day ☐ / per session ☐ for a total not to exceed $ 20,000.00 including benefits.
2. The term of the Agreement shall be the period commencing on 08/03/2026 and terminating on 06/30/2026.
   a. Contracts shall not cross fiscal years.
3. Consultant will provide the services as listed in the Scope of Work following this agreement.
4. The Consultant shall submit invoicing on a monthly basis, or at the conclusion of this contract agreement to the BUSD Consultant Portal. The approving administrator of the time spent in providing the services and preparing the products required by this Agreement is a required component of the Consultant Portal Form. Consultant will be paid on a monthly basis or at the conclusion of this contract as in the agreement.
5. It is expressly understood and agreed to by both parties that the Consultant, while engaged in carrying out and complying with any of the terms and conditions of this contract, is an independent contractor and is not an officer, agent, or employee of the aforesaid District.

6. Consultant agrees to maintain insurance coverage sufficient to support its obligations under this Agreement, with minimum limits of liability not less than $1,000,000. Additional insurance coverage for Workers' Compensation and/or Automobile Liability may be required.
7. Consultant agrees to hold harmless, defend, and indemnify the District, its Governing Board, administrators, directors, employees, agents, affiliates, successors, and assigns from and against any and all losses, damages, liabilities, claims, actions, judgments, court costs, and legal or other expenses (including, without limitation, reasonable legal fees) (collectively, "Claims") that the District may suffer or incur as a result of or arising directly or indirectly as a result of Consultant's performance or failure to perform services under this Agreement.
8. This agreement may be terminated at any time based upon the mutual agreement of the parties hereto. This agreement may also be terminated immediately by the District should the Consultant breach this agreement or fail to perform the required services in a satisfactory manner.
9. Consultant agrees to pay all federal, state, and local taxes and fees that are owed as a result of payments made to Consultant pursuant to this agreement. Consultant agrees to indemnify and hold harmless the District from any and all costs, loss, or liability whatsoever arising from or caused by any challenge to the payments made to Consultant pursuant to this agreement, including but not limited to any liabilities or penalties assessed or levied by any and all local, state, or federal taxing authorities against the District.
10. Consultant agrees, if requested by the District, to furnish a conditional waiver and release together with invoices, and an unconditional waiver and release within 10 days of receipt of payment of such invoices.
11. Consultant agrees to ensure that they do not exceed the applicable earnings limitation under CALPERS or STRS and agrees to be solely responsible for any actions taken by CALPERS or STRS as a result of exceeding the applicable earnings limitation.

Burbank Unified School District of Los Angeles County
IN WITNESS THEREOF, the parties hereto have set their hands on the day and in the month and year first above written.

	Kenyan Armitage
Administrator	Consultant
Title	[redacted]
Board Approval Date	City, State ZIP

Instructions: The Consultant is to sign and return two copies to the sponsoring administrator's office. After the BUSD Executive Cabinet has reviewed, this will proceed for Board approval. Once Board approved, a requisition should be entered with this attached agreement.

STATEMENT OF WORK

Program/Project Purpose:

MURALS FOR EMERSON

Basis for Request:

MAKING ART ACCESSIBLE TO AUDIENCES FROM ALL WALKS OF LIFE.

Background/Scope/Objectives:

A NATIVE OF LOS ANGELES WHO MEANS TO EXTEND HER ART BEYOND THE CONFINES OF GALLERY WALLS.

Deliverables/Milestones:

HER WORK SPANS PAINTINGS, SCULPTURES, DRAWINGS AND MURALS.

Invoice Approver:

JENNIFER ALMER, PRINCIPAL

Timeline:

05/25/2026 TO 06/01/2026

Payment Terms:

ONE FINAL PAYMENT

ABOUT

Born and raised in Los Angeles, Kenyan is an artist whose creative spectrum spans paintings, sculptures, video installations, drawings, and murals—a particular focus that has captivated her artistic endeavors. Painting murals offers Kenyan a means to extend her art beyond the confines of gallery walls, making it accessible to audiences from all walks of life.

Driven by an ardent desire to proliferate public art, Kenyan finds immense motivation in her quest to enhance and enrich spaces with her creations. Whether seeking to beautify or introduce novel elements to an area, she understands the profound impact of public art on individuals and communities alike. Kenyan firmly believes in its ability to elicit a range of emotions—joy, wonder, thoughtfulness, and even sadness—while forging connections between people and their surroundings, as well as with each other.

For Kenyan, the act of creating art accessible to all is not merely a vocation but a labor of love. She recognizes the significance of public art, regardless of whether its impact is fleeting or enduring, understanding its potential to evoke profound feelings and responses. In her view, to craft art for everyone to experience is an authentic expression of devotion to her craft and a testament to the unifying power of creativity.



CONTACT

studio@kenyanarmitage.com

HOME BASE

Los Angeles, California

FOLLOW KENYAN ARMITAGE

Instagram

Copyright © 2024 KENYAN ARMITAGE

BURBANK UNIFIED SCHOOL DISTRICT
1900 W. Olive Avenue • Burbank, CA 91506-2460 • (818) 729-4400

AGREEMENT FOR CONSULTANT SERVICES

This Agreement, made and entered into this ____ day of _, 20__ by and between the **Burbank Unified School District**, hereinafter referred to as "District", and _____hereinafter referred to as "Consultant."

Luke Anderson [redacted] [redacted]
Payee's Name (Person or Company) Social Security or Federal I.D. # Phone Number

Mailing Address: [redacted]
City State Zip

Sponsoring Administrator: Nicole Cody Principal Edison
Print Name Title Location

Date Submitted to Board: 5/7/2026 Funding Source (Resource): 01.0-90870.0-11100-10000-5810-2020000

STRS/PERS Member: Yes No

The assignment **will** ☐ **will not** ■ require Consultant to work with pupil(s) unsupervised in a program sponsored by the District during the contract period. If it does, the Consultant will be contacted by HR and provide the DOJ & FBI clearance form to complete as required by AB346. The consultant will be responsible for associated costs of fingerprinting. **Consultant shall not begin service until HR receives clearance.**

WITNESSETH:

WHEREAS, the District is authorized pursuant to Education Code section 35160 and Government Code Section 53060 to contract for the services of consultants;
WHEREAS, the Consultant is especially trained, experienced, and competent to provide such services;
WHEREAS, in consideration of the mutual promises of the parties, hereto, the District hereby retains the Consultant upon the terms and conditions hereinafter set forth, and the Consultant hereby accepts said retention and agrees to perform the services hereinafter mentioned, upon said terms and conditions;
NOW THEREFORE, the parties mutually agree as follows

1. The Consultant agrees to perform the following services for the District, at a rate of $ 40 per hour ■ / per day ☐ / per session ☐ for a total not to exceed $ 3300, including benefits.
2. The term of the Agreement shall be the period commencing on 8/17/26 and terminating on 5/24/27.
   a. Contracts shall not cross fiscal years.
3. Consultant will provide the services as listed in the Scope of Work following this agreement.
4. The Consultant shall submit invoicing on a monthly basis, or at the conclusion of this contract agreement to the BUSD Consultant Portal. The approving administrator of the time spent in providing the services and preparing the products required by this Agreement is a required component of the Consultant Portal Form. Consultant will be paid on a monthly basis or at the conclusion of this contract as in the agreement.
5. It is expressly understood and agreed to by both parties that the Consultant, while engaged in carrying out and complying with any of the terms and conditions of this contract, is an independent contractor and is not an officer, agent, or employee of the aforesaid District.

6. Consultant agrees to maintain insurance coverage sufficient to support its obligations under this Agreement, with minimum limits of liability not less than $1,000,000. Additional insurance coverage for Workers' Compensation and/or Automobile Liability may be required.
7. Consultant agrees to hold harmless, defend, and indemnify the District, its Governing Board, administrators, directors, employees, agents, affiliates, successors, and assigns from and against any and all losses, damages, liabilities, claims, actions, judgments, court costs, and legal or other expenses (including, without limitation, reasonable legal fees) (collectively, "Claims") that the District may suffer or incur as a result of or arising directly or indirectly as a result of Consultant's performance or failure to perform services under this Agreement.
8. This agreement may be terminated at any time based upon the mutual agreement of the parties hereto. This agreement may also be terminated immediately by the District should the Consultant breach this agreement or fail to perform the required services in a satisfactory manner.
9. Consultant agrees to pay all federal, state, and local taxes and fees that are owed as a result of payments made to Consultant pursuant to this agreement. Consultant agrees to indemnify and hold harmless the District from any and all costs, loss, or liability whatsoever arising from or caused by any challenge to the payments made to Consultant pursuant to this agreement, including but not limited to any liabilities or penalties assessed or levied by any and all local, state, or federal taxing authorities against the District.
10. Consultant agrees, if requested by the District, to furnish a conditional waiver and release together with invoices, and an unconditional waiver and release within 10 days of receipt of payment of such invoices.
11. Consultant agrees to ensure that they do not exceed the applicable earnings limitation under CALPERS or STRS and agrees to be solely responsible for any actions taken by CALPERS or STRS as a result of exceeding the applicable earnings limitation.

Burbank Unified School District of Los Angeles County
IN WITNESS THEREOF, the parties hereto have set their hands on the day and in the month and year first above written.

	Luke Anderson
Administrator	Consultant
Title	[redacted]
Board Approval Date	City, State ZIP

Instructions: The Consultant is to sign and return two copies to the sponsoring administrator's office. After the BUSD Executive Cabinet has reviewed, this will proceed for Board approval. Once Board approved, a requisition should be entered with this attached agreement.

STATEMENT OF WORK

Program/Project Purpose:

The purpose of this is to promote peaceful playground games, and to teach and reinforce sportsmanship

Basis for Request:

This is to help with students struggling with how to use the unstructured time on the yard. This will be used to provide more activities to students.

Background/Scope/Objectives:

Coach Luke will work with all of our classes individually to teach various sports, games and activities. He will also facilitate play with the students during lunch to reinforce proper play of games, remind them of rules and encourage sportsmanship.

Deliverables/Milestones:

Working with students on peaceful playground games. This will promote less conflict on the playground.

Invoice Approver:

Edison Principal, Nicole Cody

Timeline:

Every Monday of the year. 2.5 hours a day.

Payment Terms:

$40/hr. or $100 a day.

BURBANK UNIFIED SCHOOL DISTRICT
1900 W. Olive Avenue
Burbank, CA 91506-2460

THE UNDERSIGNED ACKNOWLEDGES SERVICES & AUTHORIZATION FOR PAYMENT:

Edison Elementary
School Site or Department **Req./PO Number**

TO: **Burbank Unified School District**
Accounts Payable
1900 W. Olive Avenue
Burbank, CA 91506-2460

Payee's Name: Luke Anderson

Retiree? (required) **No** X **If yes, circle: CalPERS or CalSTRS**

[redacted]

City **State** **Zip Code**

Consultant's Signature

Date of service: 8/17/26 - 5/24/27

Amount to be paid: 3300 **Hours worked:** _____ (required if retiree)

Payment Terms: Payed monthly

Appropriation No.: 010-90870-0-11100-10000-5810-202-0000

APPROVED BY THE BOARD: _____

Signature-Principal/Sponsoring Administrator
Certifying Receipt of Services & Approval of Payment

Date 4/21/26

AFTER COMPLETION OF SERVICE Submit the COMPLETED form with the following to Purchasing:
Enter Purchase Requisition in Smarte after Board approval
1) Attach Invoice if available
2) W9 for fiscal year first payment
3) Completed/Signed Agreement or Contract
4) Attach all paperwork in Smarte when entering Purchase Requisition

July, 2019

BIO Page for Luke Anderson:

Coach Luke Anderson graduated from Azusa Pacific University with a degree in History and minor in Leadership. He brings years of experience working with kids in organizations such as Mere &Co Neighborhood Care and Amazing Athletes, as well as with BUSD's Peaceful Playground program and ASES. He is passionate about using sports and physical activity as a tool for personal and social development and providing safe and fun environments that reflect the immense value of every child.

BURBANK UNIFIED SCHOOL DISTRICT
1900 W. Olive Avenue • Burbank, CA 91506-2460 • (818) 729-4400

AGREEMENT FOR CONSULTANT SERVICES

This Agreement, made and entered into this 21st day of April, 20 26 by and between the **Burbank Unified School District,** hereinafter referred to as "District", and _____ hereinafter referred to as "Consultant."

LabRats San Diego [redacted] Lab Rats, San Diego
Payee's Name (Person or Company) Social Security or Federal I.D. # Phone Number

Mailing Address: [redacted]
City State Zip

Sponsoring Administrator: Judy Hession Principal Miller Elementary School
Print Name Title Location

Date Submitted to Board: 5/7/2026 Funding Source (Resource): [redacted]

STRS/PERS Member: Yes (No)

010-30100.2-11100-24950-5810-2100000 $3000
010-42030.2-47600-24950-5810-2100000 $1750

The assignment will ☐ will not ■ require Consultant to work with pupil(s) unsupervised in a program sponsored by the District during the contract period. If it does, the Consultant will be contacted by HR and provide the DOJ & FBI clearance form to complete as required by AB346. The consultant will be responsible for associated costs of fingerprinting. **Consultant shall not begin service until HR receives clearance.**

WITNESSETH:

WHEREAS, the District is authorized pursuant to Education Code section 35160 and Government Code Section 53060 to contract for the services of consultants;
WHEREAS, the Consultant is especially trained, experienced, and competent to provide such services;
WHEREAS, in consideration of the mutual promises of the parties, hereto, the District hereby retains the Consultant upon the terms and conditions hereinafter set forth, and the Consultant hereby accepts said retention and agrees to perform the services hereinafter mentioned, upon said terms and conditions;
NOW THEREFORE, the parties mutually agree as follows

1. The Consultant agrees to perform the following services for the District, at a rate of $_____ per hour ☐ / per day ☐ / per session ■ for a total not to exceed $ 4750 , including benefits.
2. The term of the Agreement shall be the period commencing on _____ and terminating on _____.
   a. Contracts shall not cross fiscal years.
3. Consultant will provide the services as listed in the Scope of Work following this agreement.
4. The Consultant shall submit invoicing on a monthly basis, or at the conclusion of this contract agreement to the BUSD Consultant Portal. The approving administrator of the time spent in providing the services and preparing the products required by this Agreement is a required component of the Consultant Portal Form. Consultant will be paid on a monthly basis or at the conclusion of this contract as in the agreement.
5. It is expressly understood and agreed to by both parties that the Consultant, while engaged in carrying out and complying with any of the terms and conditions of this contract, is an independent contractor and is not an officer, agent, or employee of the aforesaid District.

6. Consultant agrees to maintain insurance coverage sufficient to support its obligations under this Agreement, with minimum limits of liability not less than $1,000,000. Additional insurance coverage for Workers' Compensation and/or Automobile Liability may be required.
7. Consultant agrees to hold harmless, defend, and indemnify the District, its Governing Board, administrators, directors, employees, agents, affiliates, successors, and assigns from and against any and all losses, damages, liabilities, claims, actions, judgments, court costs, and legal or other expenses (including, without limitation, reasonable legal fees) (collectively, "Claims") that the District may suffer or incur as a result of or arising directly or indirectly as a result of Consultant's performance or failure to perform services under this Agreement.
8. This agreement may be terminated at any time based upon the mutual agreement of the parties hereto. This agreement may also be terminated immediately by the District should the Consultant breach this agreement or fail to perform the required services in a satisfactory manner.
9. Consultant agrees to pay all federal, state, and local taxes and fees that are owed as a result of payments made to Consultant pursuant to this agreement. Consultant agrees to indemnify and hold harmless the District from any and all costs, loss, or liability whatsoever arising from or caused by any challenge to the payments made to Consultant pursuant to this agreement, including but not limited to any liabilities or penalties assessed or levied by any and all local, state, or federal taxing authorities against the District.
10. Consultant agrees, if requested by the District, to furnish a conditional waiver and release together with invoices, and an unconditional waiver and release within 10 days of receipt of payment of such invoices.
11. Consultant agrees to ensure that they do not exceed the applicable earnings limitation under CALPERS or STRS and agrees to be solely responsible for any actions taken by CALPERS or STRS as a result of exceeding the applicable earnings limitation.

Burbank Unified School District of Los Angeles County
IN WITNESS THEREOF, the parties hereto have set their hands on the day and in the month and year first above written.

	LabRats San Diego
Administrator	Consultant
Title	[redacted]
Board Approval Date	City, State ZIP

Instructions: The Consultant is to sign and return two copies to the sponsoring administrator's office. After the BUSD Executive Cabinet has reviewed, this will proceed for Board approval. Once Board approved, a requisition should be entered with this attached agreement.

STATEMENT OF WORK

Program/Project Purpose: Family STEM Night at Miller Elementary School

Basis for Request:

Project-based learning is critical to student success. It helps develop and enhance student learning by encouraging critical thinking, problem solving, teamwork, and self-management.

LabRats San Diego's program takes ideas and concepts students would normally only encounter in textbooks and integrates them through an engaging approach. We use hands-on, exciting labs and demos that are related to real world scenarios. Additionally, this emphasizes to students that science created the modern marvels that surround us today.

Background/Scope/Objectives:

LabRats San Diego is a non-profit, 501c3 STEM education company.

LabRat San Diego's goal is to offer high quality education to children in need and to empower youth to achieve their very best through STEM. They believe that an education in STEM is the power to transform the world with a single idea.

LabRats San Diego will provide a Family STEM Night for 100 students in Grades TK-5 and their families at Miller Elementary School. Students will have the opportunity to rotate through four (4) STEM demonstration stations.

Deliverables/Milestones:

LabRats San Diego will provide a Family STEM Night for 100 students in Grades TK-5 and their families at Miller Elementary School. Students will rotate through four (4) STEM demonstration stations. Each station will give students an opportunity for hands-on experience that it is tied to STEM (Science, Technology, Engineering, and Mathematics).

Invoice Approver:

The BUSD administrator that will be approving the Consultant Portal Invoices with this contract will be Judy Hession, Principal at Miller Elementary School

Timeline:

Family STEM Night will be on Tuesday, May 19, 2026

Payment Terms:

Payment will be made after the completion of the Family STEM Night.

Amount due will be $4,750 for 2 hours with 4 Demonstration Stations

LabRats San Diego

San Diego LabRats is a non profit, 501c3, STEM education company.

Our goal is to offer high quality education to children in need. Our goal is to Empower youth to achieve their very best through STEM. We believe an education in STEM is the power to transform the world with a single idea."

LabRats Education Philosophy

Project-based learning is critical to student success. It helps develop and enhance student learning by encouraging critical thinking, problem solving, teamwork and self-management.

We believe students learn best by doing, especially when they are self-motivated and pursue their own ideas and interests independently, with guidance from someone more knowledgeable when needed.

Our Teaching Methods

Students need an environment to explore, to ask questions, and to be challenged overall. But they also need a knowledgeable mentor to guide them along their journeys.

Our teachers are scientists, who have conducted specialized research on their own and have a passion for passing on their knowledge and expertise to the next generation.

Our program takes ideas and concepts students would normally only encounter in textbooks and integrates them through an engaging approach. We use hands-on, exciting labs and demos that are related to real world scenarios. Additionally, this emphasizes to students that science created the modern marvels that surround us today.

Everything we do is designed to instill a growth mindset in students. Our labs heavily motivate students to think through problems rather than just follow directions. When a student asks us a "what if" question, we respond with "let's try it."

Students in our classes discover that working through difficult problems is how they learn, and that just because they don't understand something at first, doesn't mean that they never will.

This yields them with the confidence to believe in themselves instead of shutting down when encountering future problems.

Extracurricular programs such as organized sports and Boy/Girl Scouts have been very effective at fostering an atmosphere of community, and we follow a similar social model in our classrooms.

We include elements of teamwork and competition into our lesson plans to build confidence, develop community, and encourage students to participate and learn actively.

All of this produces a classroom environment that is dynamic and fun rather than the traditional "sit and listen" environment students experience in school on a daily basis.

Revised 2x-
4/22/2026

Burbank Unified School District
Instructional Services

Budget Pre-Approval
Signed by_____ Ext._____

CONSULTANT REQUEST FOR BOARD APPROVAL

Please send the following Consultants to the Board for approval. Board Meeting on Thursday, May 7, 2026

Site	Consultant(s)*	Service	Date(s)	Cost	Appropriation No. and Program Name
Miller Elementary School	LabRats San Diego	Family STEM Night	Tuesday, 5/19/2026	$ 4,750	010-30100.2-11100-24950-5810-210-0000-0000 (Title I) in the amount of $3,000 010-42030.2-47600-24950-5810-210-0000-0000 (Title 3) in the amount of $1,750

*If the consultant is being paid through a company or organization, this needs to be indicated in the "consultant's box" for proper payment.

Consultant's Qualifications: LabRats San Diego is a non-profit, 501c3 STEM education company that was founded in 2017. They engage students with an exciting and empowering introduction to the world of STEM (Science, Technology, Engineering, Mathematics).

Purpose: LabRats San Diego will provide a Family STEM Night to 100 students in Grades TK-5. Students will rotate through 4 STEM demonstration stations. Each of these STEM demonstration stations will focus on Science, Technology, Engineering, and Mathematic.

Authorized Signature	Location	Date
Jenny Jones	Miller Elementary School	4/22/2026

ATTACH A COPY OF THE CONSULTANT'S RESUME OR FACT SHEET (one page only) AND RETURN COMPLETED FORM TO JENNY JONES IN INSTRUCTIONAL SERVICES

BURBANK UNIFIED SCHOOL DISTRICT
1900 W. Olive Avenue • Burbank, CA 91506-2460 • (818) 729-4400

AGREEMENT FOR CONSULTANT SERVICES

This Agreement, made and entered into this 11th (Day) day of March (Month), 2026 (Year) by and between the **Burbank Unified School District**, hereinafter referred to as "District", and The Imagination Machine (Consultant Name) hereinafter referred to as "Consultant."

The Imagination Machine LLC	[redacted]	[redacted]
Payee's Name (Person or Company)	Social Security or Federal I.D. #	Phone Number

[redacted]			
Mailing Address	City	State	Zip

Matt Osmond	Principal	Roosevelt Elem.
Sponsoring Administrator Name	Title	Location

5/7/26	01.0-67700.0-11100-10000-5810-2140000
Date Submitted to Board	Funding Source (Resource)

STRS/PERS Member: ☐ Yes ■ No

The assignment ☐ **will** ■ **will not** require Consultant to work with pupil(s) unsupervised in a program sponsored by the District during the contract period. If it does, the Consultant will be contacted by HR and provide the DOJ & FBI clearance form to complete as required by AB346. The consultant will be responsible for associated costs of fingerprinting. **Consultant shall not begin service until HR receives clearance.**

WITNESSETH:

WHEREAS, the District is authorized pursuant to Education Code section 35160 and Government Code Section 53060 to contract for the services of consultants;
WHEREAS, the Consultant is especially trained, experienced and competent to provide such services;
WHEREAS, in consideration of the mutual promises of the parties, hereto, the District hereby retains the Consultant upon the terms and conditions hereinafter set forth, and the Consultant hereby accepts said retention and agrees to perform the services hereinafter mentioned, upon said terms and conditions;
NOW THERFORE, the parties mutually agree as follows:

1. The Consultant agrees to perform the following services for the District, at a rate of $2489.47 ☐ per hour / ■ per day/ ☐ per session for a total not to exceed $2489.47, including benefits.
2. The term of the Agreement shall be the period commencing on May 14, 2026 and terminating on May 14, 2026.
   a. Contracts shall not cross fiscal years.
3. Consultant will provide the services as listed in the Scope of Work following this agreement.
4. The Consultant shall submit invoicing on a monthly basis, or at the conclusion of this contract agreement to the BUSD Consultant Portal. The approving administrator of the time spent in providing the services and preparing the products required by this Agreement is a required component of the Consultant Portal Form. Consultant will be paid on a monthly basis or at the conclusion of this contract as in the agreement.
5. It is expressly understood and agreed to by both parties that the Consultant, while engaged in carrying out and complying with any of the terms and conditions of this contract, is an independent contractor and is not an officer, agent or employee of the aforesaid District.

6. Consultant agrees to maintain insurance coverage sufficient to support its obligations under this Agreement, with minimum limits of liability not less than $1,000,000. Additional insurance coverage for Workers Compensation and/or Automobile Liability may be required.
7. Consultant agrees to hold harmless, defend, and indemnify the District, its Governing Board, administrators, directors, employees, agents, affiliates, successors, and assigns from and against any and all losses, damages, liabilities, claims, actions, judgments, court costs, and legal or other expenses (including, without limitation, reasonable legal fees) (collectively, "Claims") that the District may suffer or incur as a result of or arising directly or indirectly as a result of Consultant's performance or failure to perform services under this Agreement.
8. This agreement may be terminated at any time based upon the mutual agreement of the parties hereto. This agreement may also be terminated immediately by the District should the Consultant breach this agreement or fail to perform the required services in a satisfactory manner.
9. Consultant agrees to pay all federal, state and local taxes, and fees that are owed as a result of payments made to Consultant pursuant to this agreement. Consultant agrees to indemnify and hold harmless the District from any and all costs, loss, or liability whatsoever arising from or caused by any challenge to the payments made to Consultant pursuant to this agreement, including but not limited to any liabilities or penalties assessed or levied by any and all local, state, or federal taxing authorities against the District.
10. Consultant agrees, if requested by the District, to furnish a conditional waiver and release together with invoices, and an unconditional waiver and release within 10 days of receipt of payment of such invoices.
11. Consultant agrees to ensure that they do not exceed the applicable earnings limitation under CALPERS or STRS and agrees to be solely responsible for any actions taken by CALPERS or STRS as a result of exceeding the applicable earnings limitation.

Burbank Unified School District of Los Angeles County
IN WITNESS THEREOF, the parties hereto have set their hands on the day and in the month and year first above written.

	 Lindsay Brooks
District Administrator	Consultant Name & Signature
	[redacted]
Title	
Board Approval Date	City, State Zip

Instructions: Consultant is to sign and return two copies to the sponsoring administrator's office. After the BUSD Executive Cabinet has reviewed, this will proceed for Board approval. Once Board approved, a requisition should be entered with this attached agreement.

Revised 7/17/2025

STATEMENT OF WORK

Program/Project Purpose:

Educational enrichment assembly for Roosevelt Elementary

Basis for Request:

To provide an engaging and interactive ELA and theater arts assembly to all students at Roosevelt Elementary (grades TK-5).

Background/Scope/Objectives:

The Imagination Machine was founded in 1981 in the city of Orange, California by Deborah Wren. As a classroom teacher and working actress, she saw a way to use her own creative abilities to encourage students to explore their imaginations through creative writing. Through their program, students in every grade write stories in class, which are then sent to The Imagination Machine by the school. The Imagination Machine selects stories from each grade and adapts them into a complete production with professional actors, live accompaniment, and costume pieces, which is then performed at the school's assembly.

Deliverables/Milestones:

Three 45-minute assemblies, performed on the day of May 14, 2026.

Invoice Approver:

Matthew Osmond, Principal

Timeline:

May 14, 2026: Consultant performs three assemblies at Roosevelt Elementary at 8:35 am, 10:30 am, and 11:35 am.

Payment Terms:

$2489.47 flat rate, payable upon completion of assemblies.

HOME BOOKING ABOUT CONTACT PODCAST

THE COMPANY

the journey of A TEACHER



The Imagination Machine was founded in 1981 in the city of Orange, California by Deborah Wren. As a classroom teacher and working actress, she saw a way to use her own creative abilities to encourage students to explore their imaginations through creative writing. She developed her concept for The Imagination Machine in order to foster children's ideas before they started censoring themselves about what was "good" or "bad." Through our program, students see their own stories come to life on stage! What started with only 14 schools over 30 years ago has blossomed into over 500 schools per year. Now The Imagination Machine can be found throughout the entire state of California and will soon be expanding its touring company into Arizona and Nevada!

meet OUR CAST

Filled with professional actors and musicians, we absolutely adore our cast of performers. Learn more about them; we know you will too!



Burbank Unified School District
Instructional Services

REPORT TO THE BOARD

TO:	Members of the Board of Education
FROM:	Peter Knapik, Assistant Superintendent of Educational Services
PREPARED BY:	Peter Knapik, Assistant Superintendent of Educational Services
SUBMITTED BY:	Laura Erisman, Administrative Secretary
DATE:	May 7, 2026
SUBJECT:	Ratification of Agreement for Instructional Consultant Services

---

Background:

The purpose of the Instructional Consultant Services is to enrich student learning. Consultants are selected based on their qualifications regarding specific subject areas. When a consultant is selected, the consultant company/organization must complete the required paperwork for the district to ensure that district students receive the services they require. The Board of Education must approve all consultant requests before services are rendered.

Discussion and Issues:

Sites submit the required paperwork to Instructional Services. Work must not begin until the site receives confirmation of Board approval from Instructional Services. Due to delays beyond their control, Special Education was unable to submit the consultant agreement before the April 13, 2026 meeting and Instructional Services was unable to submit the consultant agreement before the August 1, 2024 meeting. Therefore, the agreement below is being presented as ratification. If the Consultant assignment requires unsupervised contact with student(s) during the contract period, the Consultant will be required to provide Department of Justice fingerprint clearance through the District's Human Resources Services.

Fiscal Impact:

See attached.

Recommendation:

Peter Knapik, Assistant Superintendent of Educational Services, recommends that the Board of Education ratify the instructional consultant services for on-site student learning support and staff development and exercise authority to sign the agreements pursuant to BUSD-AR 3314, as presented.

BURBANK UNIFIED SCHOOL DISTRICT
INSTRUCTIONAL SERVICES
RATIFICATION OF INSTRUCTIONAL CONSULTANT SERVICES

Board Meeting Date: May 7, 2026

Site	Name	Purpose	Dates	Cost	Appropriation Number
Instructional Services	Jill Sullivan	Teacher Induction Program Consultant for BHS Teacher	8/1/2024-6/30/2025	$2245.00	010-00000.0-00000-27000-5810-74200000
Special Education	Martha D Ferguson	Ms. Ferguson to provide music instruction to our Special Education Early Development (SEED) program	4/13/26 – 7/19/26	$7,000.00	010-67700.0-11100-10000-5810-5080000

BURBANK UNIFIED SCHOOL DISTRICT
1900 W. Olive Avenue • Burbank, CA 91506-2460 • (818) 729-4400

AGREEMENT FOR CONSULTANT SERVICES

This Agreement, made and entered into this 7 day of May, 2026 by and between the **Burbank Unified School District**, hereinafter referred to as "District", and Jill Sullivan hereinafter referred to as "Consultant."

Jill Sullivan [redacted] [redacted]
Payee's Name (Person or Company) Social Security or Federal I.D. # Phone Number

Mailing Address: [redacted]
City State Zip

Sponsoring Administrator: Terry Williamson Induction Coordinator BUSD
Print Name Title Location

Date Submitted to Board: 5/7/26 Funding Source (Resource): 010-00000.0-00000-27000-5810-7420000

STRS/PERS Member: Yes No

The assignment **will** ☐ **will not** ■ require Consultant to work with pupil(s) unsupervised in a program sponsored by the District during the contract period. If it does, the Consultant will be contacted by HR and provide the DOJ & FBI clearance form to complete as required by AB346. The consultant will be responsible for associated costs of fingerprinting. **Consultant shall not begin service until HR receives clearance.**

WITNESSETH:

WHEREAS, the District is authorized pursuant to Education Code section 35160 and Government Code Section 53060 to contract for the services of consultants;
WHEREAS, the Consultant is especially trained, experienced, and competent to provide such services;
WHEREAS, in consideration of the mutual promises of the parties, hereto, the District hereby retains the Consultant upon the terms and conditions hereinafter set forth, and the Consultant hereby accepts said retention and agrees to perform the services hereinafter mentioned, upon said terms and conditions;
NOW THEREFORE, the parties mutually agree as follows

1. The Consultant agrees to perform the following services for the District, at a rate of $_____ per hour ☐ / per day ■ / per session ☐ for a total not to exceed $ 2245.00, including benefits.
2. The term of the Agreement shall be the period commencing on 8/1/24 and terminating on 6/30/25.
   a. Contracts shall not cross fiscal years.
3. Consultant will provide the services as listed in the Scope of Work following this agreement.
4. The Consultant shall submit invoicing on a monthly basis, or at the conclusion of this contract agreement to the BUSD Consultant Portal. The approving administrator of the time spent in providing the services and preparing the products required by this Agreement is a required component of the Consultant Portal Form. Consultant will be paid on a monthly basis or at the conclusion of this contract as in the agreement.
5. It is expressly understood and agreed to by both parties that the Consultant, while engaged in carrying out and complying with any of the terms and conditions of this contract, is an independent contractor and is not an officer, agent, or employee of the aforesaid District.

6. Consultant agrees to maintain insurance coverage sufficient to support its obligations under this Agreement, with minimum limits of liability not less than $1,000,000. Additional insurance coverage for Workers' Compensation and/or Automobile Liability may be required.
7. Consultant agrees to hold harmless, defend, and indemnify the District, its Governing Board, administrators, directors, employees, agents, affiliates, successors, and assigns from and against any and all losses, damages, liabilities, claims, actions, judgments, court costs, and legal or other expenses (including, without limitation, reasonable legal fees) (collectively, "Claims") that the District may suffer or incur as a result of or arising directly or indirectly as a result of Consultant's performance or failure to perform services under this Agreement.
8. This agreement may be terminated at any time based upon the mutual agreement of the parties hereto. This agreement may also be terminated immediately by the District should the Consultant breach this agreement or fail to perform the required services in a satisfactory manner.
9. Consultant agrees to pay all federal, state, and local taxes and fees that are owed as a result of payments made to Consultant pursuant to this agreement. Consultant agrees to indemnify and hold harmless the District from any and all costs, loss, or liability whatsoever arising from or caused by any challenge to the payments made to Consultant pursuant to this agreement, including but not limited to any liabilities or penalties assessed or levied by any and all local, state, or federal taxing authorities against the District.
10. Consultant agrees, if requested by the District, to furnish a conditional waiver and release together with invoices, and an unconditional waiver and release within 10 days of receipt of payment of such invoices.
11. Consultant agrees to ensure that they do not exceed the applicable earnings limitation under CALPERS or STRS and agrees to be solely responsible for any actions taken by CALPERS or STRS as a result of exceeding the applicable earnings limitation.

Burbank Unified School District of Los Angeles County

IN WITNESS THEREOF, the parties hereto have set their hands on the day and in the month and year first above written.

	Jill Sullivan
Administrator	Consultant
Title	[redacted]
Board Approval Date	City, State ZIP

Instructions: The Consultant is to sign and return two copies to the sponsoring administrator's office. After the BUSD Executive Cabinet has reviewed, this will proceed for Board approval. Once Board approved, a requisition should be entered with this attached agreement.

STATEMENT OF WORK

Program/Project Purpose:

Burbank Unified School District Teacher Induction Program Consultant

Basis for Request:

I consulted one Burbank High School New Teacher: Marina Nazaryan for the entire 2024-25 school year and successfully attended all the BUSD Induction Support Provider meetings and completed all required obligations and forms.

Background/Scope/Objectives:

I have been a BUSD New Teacher Support Provider since the Burbank Mentor Teacher Progra was first started in 1996.

Deliverables/Milestones:

Completed Marina Nazaryan's 2024-25 ILP

Invoice Approver:

Terry Williamson

Timeline:

2024-2025 School Year

Payment Terms:

[redacted] CA 91040-2624 Phone [redacted]
E-mail jillsullivan@burbankusd.org

Jill B. Sullivan

Education	Los Angeles Valley College - 1969-1972
	Associate of Arts Degree – January 1972
	California State University, Northridge 1974-1982
	Bachelor of Arts Degree, English – January 1974
	Master of Arts Degree, Secondary Education Reading Improvement – May, 1977
Credentials/ Authorizations	California Single Subject Credential, English – July 1, 1974-Life
	California Reading Specialist Credential – June 4, 1976-Life
	SDAIE Certificate of Completion/ AB 1969 Authorization – June 1, 1977
	Grade 9-12 Reading Basic to Success / AB 1086 Training of Trainers – March, 2000
Teaching Experience	
9/90–2019	Burbank Unified School District, John Burroughs High School: English 9-10-11-12, Honors English 10, Reading for Life 9, English Department Chairperson, GATE Coordinator, Odyssey of the Mind Coach/Coordinator
9/80–6/90	Burbank Unified School District, David Starr Jordan Middle School: Reading Lab 7-8-9, Power Reading 8-9, Writing Workshop 9, English 7-8-9, GATE English 8, JSS Sponsor, History Day, L.A. Sponsor
12/74–6/80	Los Angeles Unified Schools, Audubon Junior High School: English 7-8-9, Reading 7-8-9, Speech 7, Drama 8-9, Reading Coordinator, Junior Council Advisor, Tap Club Sponsor
Summer, 1979	Los Angeles Unified Schools, Crenshaw High School: English Communication 10A-10B

Student Teaching Spring, 1974	Los Angeles Unified Schools, John H. Francis Polytechnic High School: English 10, Remedial Reading 10, Power Reading 11-12, observed Reading Lab, helped supervise Psychology Club
Fall, 1973	Burbank Unified School District, David Starr Jordan Middle School: English 9, observed Reading Lab and Opportunity Room
Additional Professional Activities	1996-Present – Burbank Unified School District Mentor Teacher/Beginning New Teacher Support, Induction and Assessment Support Provider
	2001 –Consultant for Alhambra High School: conducted Textbook Literacy Staff Development Workshops and Creating and Using Rubrics and Bench Marks Workshops
	1980-2019–Consultant for Burbank Unified School District, conducting numerous staff-development workshops on textbook literacy, reading, vocabulary development, cooperative learning, new teacher survival and rubric assessment
	1985-88 – Burbank Unified School District Mentor Teacher, Co-creator/publisher of the BUSD New Teacher Survival Guide and the GATE Booklet of Summer Activities.
Additional Reading/ and Writing Training	2001-2019 Various CSUN Writing Project, Write to Literacy, and ISAW Conferences
	January, 2000–The College Board: Building Success Workshop
	August, 1999–Torrance Unified School District: Second Chance Reading with Dr. Beverly Showers
	Summer, 1998–Burbank Unified School District: LLIFE, Literacy and Learning In-service, Four–Eight Training
	March,. 1998–2001–Los Angeles County Office of Education: Various Reading to Learn/Strategies for Promoting Active and Effective Reading Workshops with Dr. Kate Kinsella

Burbank Unified School District
1900 West Olive Avenue, Burbank, 91506
Tel: (818) 729-4473
Fax: (818) 729-4573
www.burbankusd.org

TERMS OF RATIFIED AGREEMENT

This Agreement, made and entered into this 1st day of April 2026 by and between the **Burbank Unified School District,** hereinafter referred to as "District", and Martha D Ferguson hereinafter referred to as "Provider."

Payee's Name: Martha D Ferguson Daytime Phone Number: [redacted]

Mailing Address: [redacted]

Email Address: [redacted]

Sponsoring Administrator: Peter Knapik (Print Name) Assistant Superintendent (Title) _____ (Signature) Special Education (Location)

Board Approval: 05/07/2026 Account Code: 01.0-67700.1-11100-10000-5810-5080000

The District is authorized pursuant to Education Code section 35160 and Government Code Section 53060 to contract for the services of Providers.

WHEREAS, the Provider is especially trained, experienced and competent to provide such services;

WHEREAS, in consideration of the mutual promises of the parties, hereto, the District hereby retains the Provider upon the terms and conditions hereinafter set forth, and the Provider hereby accepts said retention and agrees to perform the services hereinafter mentioned, upon said terms and conditions;

The parties mutually agree as follows:

1. The Provider agrees to perform the following services for the District, at a rate of $85 per hour for a total not to exceed $7,000 **Amount to include speaking fee, mileage and any additional fees.
2. The term of the Agreement shall be the period commencing on: 04/13/2026 and terminating on: 07/09/2026.
3. Payment Terms: Net 60 Days
4. District desires to enter into an Agreement in which Martha D Ferguson will provide music enrichment including exposure to instruments (keyboard) and movement activities.
5. The Provider shall provide a clear and concise invoice noting the time spent in providing the services and preparing the products required by this Agreement. Provider will be paid at the conclusion of this contract unless otherwise stated in the payment terms above.
6. It is expressly understood and agreed to by both parties hereto that the Provider, while engaged in carrying out and complying with any of the terms and conditions of this contract, is an independent contractor and is not an officer, agent or employee of the aforesaid District.
7. Provider agrees to defend, indemnify, save, and hold harmless the District, its governing body, the individual members thereof, and all officers, agents and employees of the District from all loss, cost, and expense arising out of any liability or claim of liability for injury, damage, or loss sustained or claimed to have been sustained arising out of, or occurring as a result of Provider's performance or failure to perform services under this Agreement.

8. This agreement may be terminated at any time based upon the mutual agreement of the parties hereto. This agreement may also be terminated immediately by the District should the Provider breach this agreement or fail to perform the required services in a satisfactory manner.

9. Provider agrees to pay all Federal, State and Local taxes, and fees that are owed as a result of payments made to Provider pursuant to this agreement. Provider agrees to indemnify and hold harmless the District from any and all costs, loss, or liability whatsoever arising from or caused by any challenge to the payments made to Provider pursuant to this agreement, including but not limited to any liabilities or penalties assessed or levied by any and all local, state, or federal taxing authorities against the District.

10. Provider agrees to provide the following to District:
    - Proof of COVID 19 vaccination
    - Sign and return Districts COVID-19 addendum

11. District and Provider will communicate and send in writing all information received by the District regarding any work-related injury to Personnel within twenty-four hours of the injury.

12. Communicate within twenty-four hours to Martha D Ferguson the details of any incident, which may result in a complaint against any Personnel regarding professional services given by the Personnel.

13. The District agrees to indemnify, defend and hold harmless Martha D Ferguson from any and all negligence and all liabilities, claims, losses, costs, damages and expenses resulting or arising from or connected with the services rendered by the District, its agents, independent contractors, employees or servants pursuant to this contract.

14. This Agreement shall constitute the entire Agreement between the parties and any prior understanding or representation of any kind preceding the date of this Agreement shall not be binding upon either party except to the extent incorporated in this Agreement.

15. It is mutually agreed that both parties shall not discriminate against any individual in the performance of their obligations under this Agreement, on the basis of race, color, religion, national origin, sex, age or disability. Both parties further certify compliance with the applicable provisions of the Civil Rights Act of 1964, the Rehabilitation Act of 1973, and the Americans with Disabilities Act and State anti-discrimination laws.

INDEMNIFICATION

Martha D Ferguson shall save and hold the District harmless from and against and shall indemnify District for any liability, loss, cost, expense or damage whatsoever caused by reason of any injury sustained by any person or to property by reason of any act, neglect, default or omission of Martha D Ferguson or any of its agents, subcontractors, employees or other representatives. If District is sued in any court for damages by reason of any of the acts of Martha D Ferguson, its agents, subcontractors, employees or other representatives referred to in this Agreement, Martha D Ferguson shall defend said action (or cause same to be defended) as its own expense and shall pay any discharge and judgment that may be rendered in any such action. If Martha D Ferguson fails or neglects to so defend said action, District may defend the same and any expenses, including reasonable Attorney fees, which District may pay or incur in defending said action and the amount of any judgment which District may be required to pay shall be promptly reimbursed by Martha D Ferguson demand.

District shall save and hold Martha D Ferguson, harmless from and against and shall indemnify Martha D Ferguson for any liability, loss, cost, expense or damage whatsoever caused by reason of any injury sustained by any person or to property by reason of any act, neglect, default or omission of District, or any of its agents, subcontractors, employees or other representatives. If Martha D Ferguson is sued in any court for damages by reason of any of the acts of the District, its agents, subcontractors, employees or other representatives referred to in this Agreement, District shall defend said action (or cause same to be defended) as its own expense and shall pay any discharge and judgment that may be rendered in any such action. If District fails or neglects to so defend said action, Martha D Ferguson may defend the same and any expenses, including reasonable attorney's fees, which Martha D Ferguson may pay or incur in defending said action and the amount of any judgment which Martha D Ferguson may be required to pay shall be promptly reimbursed by District upon demand.

ARBITRATION

Any controversy or claim arising out of or relating to this Agreement, or the performance or breach thereof, shall be settled by means of binding arbitration in accordance with the rules of the American Arbitration Association, at Los Angeles, California.

If either party to this Agreement institutes any legal action or proceeding against the other party to the Agreement arising out of the Agreement, the prevailing party shall be entitled to recover its reasonable attorney's fees and costs from the non-prevailing party.

ACKNOWLEDGED AND AGREED TO

District:

Burbank Unified School District
District/Company Name

Jennifer Nicholson
Print Representative Name

Director of Special Education
Title

Signature

Date

ACKNOWLEDGED AND AGREED TO

Provider:

Martha D Ferguson
Provider/Company

Print Representative Name

Title

Martha D. Ferguson
Signature

April 2, 2026
Date

Resume of Martha Ferguson

Education:

1973 Graduation from Eastman School of Music

Bachelor of Music w/major in Music Education and Performance

Elementary/Secondary Teaching Credential in Music Education from New York State

Trained in numerous early childhood education techniques: Suzuki, Orff-Schulwerk, Kodaly

2001 Graduation from Mount Saint Mary's College

Associate of Science in Occupational Therapy

OTA/L (licensure from state of California current)

2013 Graduation from Walden University

Master of Science/Mental Health Counseling

WORK EXPERIENCE:

1973-1976 – Music Teacher at Boude Storey Middle School

Created 7th grade choir

1976 – 1979: Trained and taught for Yamaha Music Schools

1979 – 1990: Founded non-profit Mantha Music Foundation

Trained teachers in Mantha Music Technique

Opened schools in Modesto, Berkeley, La Canada, Downey, and Hollywood, California

(facilitated teachers in Northern California and taught So. California schools)

1980-1991 Founded/co-owned Mohkou Records in Hollywood, CA.

Co-wrote and recorded 4 albums and performed music throughout California and Nevada

1991-2003: Taught music in numerous Burbank preschools and privately taught piano/recorder/guitar/voice throughout southern California while attending night school for OT degree. Still teaching piano/voice privately.

2001-2002: Worked part-time at UCLA Neuropsychiatric Institute with pre-school through elderly.

2002-2003: Worked parttime at Huntington Hospital/Della Martin Mental Health Center.

Created and facilitated music program for elderly at Center.

2003-2021: Worked at BUSD as OTA/L in Horace Mann Center and various elementary/middle/high schools.

Created OT-based music program for pre-school/elementary aged students.

2018-current: Interned and working in mental health program Emerge from Anger with Mark Miller

2023-current: Work as OTA/L with elementary/middle school children with extreme differing abilities from medically fragile, severe physical differences, to severe Autism. Have been able to incorporate music.

In the process of starting a non-profit organization "The Joy of Music" to bring the experience of music to all children

Other Accomplishments: Have been writing kids songs forever. Slowly adding these songs to Martha's Music/U Tube. Children bring songs from my soul.

Burbank Unified School District
Instructional Services

Budget Pre-Approval

Signed by_____Ext._____

CONSULTANT REQUEST FOR BOARD APPROVAL

Please send the following Consultants to the Board for approval. Board Meeting on May 7, 2026

Site	Consultant(s)*	Service	Date(s)	Cost	Appropriation No. and Program Name
SEED	Martha Ferguson	Music Instruction	4/13/2026 - 7/9/2026	$ 7,000	01.0-67700.1-11100-10000-5810-5080000 This is through a grant via Peggy Flynn

*If the consultant is being paid through a company or organization, this needs to be indicated in the "consultant's box" for proper payment.

Consultant's Qualifications: Ms. Ferguson has a bachelor of music degree and an elementary/secondary teaching degree from Eastman School of Music. She also has an associate of science in occupational therapy degree through Mount Saint Mary's College. A master of science/mental health counseling from Walden University.

Purpose: To provide music instruction to our Special Education Early Development (SEED) program

[redacted]

Authorized Signature **Location** **Date**

ATTACH A COPY OF THE CONSULTANT'S RESUME OR FACT SHEET (one page only) AND RETURN COMPLETED FORM TO JENNY JONES IN INSTRUCTIONAL SERVICES

BURBANK UNIFIED SCHOOL DISTRICT
Human Resources Services

REPORT TO THE BOARD

TO:	Members of the Board of Education
FROM:	Human Resources Services
PREPARED BY:	Lauren Trammell, Executive Assistant of Human Resources Services
SUBMITTED BY:	Lauren Trammell, Executive Assistant of Human Resources Services
DATE:	May 7, 2026
SUBJECT:	Approval of University Agreement- San Jose University

---

Background
The purpose of the University Agreement with San Jose University is to provide student teachers with experience through practice in schools and classes. Student Teachers will assume Speech Language Pathologist responsibilities in the classroom or office.

Pursuant to provisions Section 44227 of Education Code, the governing board is authorized to enter into agreements with any university or college accredited by the State Board of Education as a teacher educational institution.

Discussion/Issues
The program builds a relationship with San Jose University and expands the pool of Speech Language Pathologists. The District will provide to support to students through field experience in schools and classes of the District for students of the University who are qualified for such assignments.

Fiscal Impact
None

Recommendation
Human Resources Services, recommends that the Board of Education approve the University Agreement between the Burbank Unified School District and San Jose University, to provide educational field experience for Speech Language Pathologists effective May 8, 2026 through until terminated five (5) years on May 8, 2031, and that authority to sign the Agreement be exercised pursuant to BUSD—AR 3314, as presented.

Clinical Student Placement Agreement

This Agreement is entered into between the Trustees of the California State University on behalf of **San José State University,** located at One Washington Square, San Jose, CA 95192, hereinafter called ("the University" and/or "Trustees"), and **Burbank Unified School District,** located at **1900 W. Olive Ave, Burbank, CA 91506** hereinafter called ("the Learning Site"). The University and the Learning Site are hereinafter referred to collectively as the "Parties". This Agreement is effective as of the date of the last executed signature.

RECITALS

Whereas: The University operates fully accredited undergraduate and graduate degrees in the following allied health programs: nursing, wound & ostomy, occupational therapy, recreation therapy, communicative disorders and sciences, audiology, social work, psychology, nutrition, food science and packaging and clinical laboratory science, and desires access to facilities in which students can obtain broader clinical learning experiences;

Whereas: The Learning Site has the facilities and professional expertise to provide clinical education to students and is willing to provide a clinical training Program ("Program") for the University's Students; and

Whereas: The Parties agree that it is to their mutual advantage for selected students of the University to obtain their clinical experience at the Learning Site's facilities in accordance with the University's educational programs and the requirements of applicable accreditation organizations;

Now, therefore, in consideration of the foregoing and mutual covenants set forth below, the Parties agree as follows:

I. GENERAL INFORMATION ABOUT THE PROGRAM

A. The maximum number of University students who may participate in the Program during each training period shall be mutually agreed by the parties before the training begins.

B. The starting date and length of each Program training period shall be determined by mutual agreement.

II. UNIVERSITY'S RESPONSIBILITIES

A. Student Profiles. University shall advise each student enrolled in the Program to complete and send to Learning Site a student profile on a form to be agreed by the parties, which shall include the student's name, address, and telephone number. Each student shall be responsible for submitting his or her student profile before the Program training period begins. Learning Site shall regard this information as confidential and shall use the information only to identify with each student.

B. Schedule of Assignments. University shall notify Learning Site's Program supervisor of student assignments, including the name of the student, level of academic participation, and length and dates of proposed clinical training Program experience.

C. Program Coordinator. University shall designate a faculty member to coordinate with Learning Site's designee in planning the Program to be provided to students.

D. Records. University shall maintain all personnel records for its staff and all academic records for its students.

E. Student Responsibilities. University will notify students in the Program that they are responsible for:

1) Complying with Learning Site's administrative policies, procedures, rules and regulations;

2) Arranging for their own transportation and living arrangements if not provided by the University;

3) Assuming responsibility for their personal illnesses, necessary immunizations, tuberculin tests, and annual health examinations;

4) Maintaining the confidentiality of client information:

a. Neither University nor its employees or agents shall be granted access to individually identifiable information unless the client has first given consent using a form approved by Learning Site that complies with applicable state and federal law, including the Health Insurance Portability and Accountability Act ("HIPAA") and its implementing regulations;
b. Learning Site shall reasonably assist University in obtaining client consent in appropriate circumstances. In the absence of consent, students shall use de-identified information only in any discussions about the Program experience with University, its employees, or agents.

5) Complying with Learning Site's dress code and wearing name badges identifying themselves as students;

6) Notifying Learning Site immediately of any violation of state or federal laws by any student; and

7) Providing services to Learning Site's clients only under the direct supervision of Learning Site's professional staff.

F. Payroll Taxes and Withholdings.
University shall be solely responsible for any payroll taxes, withholdings, workers' compensation and any other insurance or benefits, including the cost of any such claims, for University's employees and agents, if any, who provide services to the Program or otherwise participate under this agreement. Students are not employees or agents of the University and shall receive no compensation for their participation in the Program, either from the University or Learning Site. For purposes of this agreement, however, students are trainees and shall be considered members of Learning Site's "workforce" as the term is defined by the HIPAA regulations at 45 C.F.R. § 160.103. [Notwithstanding the foregoing, University] Learning Site shall be bear all costs, including claims costs, associated with workers' compensation coverage for student trainees.

III. LEARNING SITE'S RESPONSIBILITIES

A. Clinical Training Program. Learning Site shall accept from University the mutually agreed upon number of students enrolled in the clinical training Program and shall provide the students with supervised experience.

B. Learning Site Designee. Learning Site shall designate a member of its staff to participate with University's designee in planning, implementing, and coordinating the Program.

C. Orientation Program. Learning Site shall require all students to participate in an orientation at the Learning Site prior to clinical training Program,

D. Access to Facilities. Learning Site shall permit students enrolled in the Program access to facilities as appropriate and necessary for their Program, provided that the students' presence shall not interfere with Learning Site's activities.

E. Records and Evaluations. Learning Site shall maintain complete records and reports on each student's performance and provide an evaluation to University on forms the University shall provide.

F. Withdrawal of Students. Learning Site may request that the University withdraw from the Program any student who Learning Site determines is not performing satisfactorily, refuses to follow Learning Site's administrative policies, procedures, rules and regulations, or violates any federal or state laws. Such requests must be in writing and must include a statement as to the reason or reasons for Learning Site's request. University shall comply with the written request within five (5) days after actually receiving it.

G. Emergency Health Care/First Aid. Learning Site shall, on any day when a student is receiving training at its facilities, provide to that student necessary emergency health care or first aid for accidents occurring in its facilities. Except as provided in this paragraph, Learning Site shall have no obligation to furnish medical or surgical care to any student.

H. Student Supervision. Learning Site shall permit students to perform services for clients only when under the supervision of an appropriately qualified professional on Learning Site's staff. Such professionals are to be qualified or certified or licensed in the discipline in which supervision is provided. Students shall work, perform assignments, and participate in staff meetings, and in-service educational programs at the discretion of their Learning Site-designated supervisors. Students are to be regarded as trainees, not employees, and are not to replace Learning Site's staff.

I. Learning Site's Confidentiality Policies. As trainees, students shall be considered members of Learning Site's "workforce," as that term is defined by the HIPAA regulations at 45 C.F.R. § 160.103, and shall be subject to Learning Site's policies respecting confidentiality of client information. In order to ensure that students comply with such policies, Learning Site shall provide students with substantially the same training that it provides to its regular employees.

IV. NON-DISCRIMINATION

The parties agree that all students receiving clinical training pursuant to this Agreement shall be selected without discrimination on account of race, color, religion, national origin, ancestry, disability, marital status, gender, gender identity, sexual orientation, age or veteran status.

V. STATUS OF UNIVERSITY AND LEARNING SITE

The parties expressly understand and agree that the students enrolled in the Program are in attendance for educational purposes, and such students are not considered employees of either Learning Site or University for any purpose, including, but not limited to, compensation for services, welfare and pension benefits, or workers' compensation insurance. Students are, however, considered members of Learning Site's "workforce" for purposes of HIPAA compliance.

VI. INSURANCE

A. University Insurance. University shall maintain in force during the term of this Agreement, at its sole cost and expense, insurance or self-insurance in amounts reasonably necessary to protect it against liability arising from negligent acts or incidents caused by University's employees. Coverage under such professional and commercial general liability insurance shall be not less than two million dollars ($2,000,000) for each occurrence and four million dollars ($4,000,000) in the aggregate. Such coverage shall be obtained from a carrier rated "A" or better by AM Best or a qualified program of self-insurance. The University shall maintain and provide evidence of workers' compensation coverage as required by law. University shall provide Learning Site with evidence of the insurance required under this paragraph. University shall promptly notify Learning Site of any cancellation, reduction, or other material change in the amount or scope of any coverage required hereunder.

B. Learning Site Insurance. Learning Site shall procure and maintain in force during the term of this Agreement, at its sole cost and expense, insurance or self-insurance in amounts reasonably necessary to protect it against liability arising from negligent acts or incidents caused by its employees. Coverage under such professional and commercial general liability insurance shall be not less than two million dollars ($2,000,000) for each occurrence and four million dollars ($4,000,000) in aggregate. Such coverage shall be obtained from a carrier rated "A" or better by AM Best or a qualified program of self-insurance. Learning Site shall maintain and provide evidence or workers' compensation coverage as required by law. Learning Site shall provide University with evidence of the insurance required under this paragraph, which will provide for not less than thirty (30) days' notice of cancellation to University. Learning Site shall promptly notify University of any cancellation, reduction, or other material change in the amount or scope of any coverage required hereunder.

VII. INDEMNIFICATION

A. University shall be responsible for damages caused by the negligence of its directors, officers, employees and duly authorized volunteers occurring in the performance of this agreement. Learning Site shall be responsible for damages caused by the negligence of its directors, agents, employees and duly authorized volunteers occurring in the performance of this agreement. It is the intention of the Learning Site and University that the provisions in this paragraph are to be interpreted to impose on each party responsibility for the negligence of their respective directors, officers, employees and duly authorized volunteers.

VIII. TERM AND TERMINATION

A. Term. This Agreement shall be effective as of the date of the last executed signature and shall remain in effect for a term of five (5) years, unless terminated sooner.

B. Renewal. This Agreement may be renewed upon written mutual agreement.

C. Termination. This Agreement may be terminated at any time by the written agreement or upon 30 days advance written notice by one party to the other, provided, HOWEVER, that in no event shall termination take effect with respect to currently enrolled students, who shall be permitted to complete their training for any semester in which termination would otherwise occur.

IX. GENERAL PROVISIONS

A. Amendments. In order to ensure compliance with HIPAA, the following provisions of this Agreement shall not be subject to amendment by any means during the term of this Agreement or any extensions: Section II, Paragraph E, subdivisions 4.a), 4.b); Section II, Paragraph F, to the extent it provides that students are members of Learning Site's "workforce" for purposes of HIPAA; Section III, Paragraphs H and I; and Section V. This Agreement may otherwise be amended at any time by mutual agreement of the parties without additional consideration, provided that before any amendment shall take effect, it shall be reduced to writing and signed by the parties.

B. Assignment. Neither party shall voluntarily or be operation of law, assign or otherwise transfer this Agreement without the other party's prior written consent. Any purported assignment in violation of this paragraph shall be void.

C. Captions. Captions and headings in this Agreement are solely for the convenience of the parties, are not a part of this Agreement, and shall not be used to interpret or determine the validity of this Agreement or any of its provisions.

D. Counterparts. This Agreement may be executed in any number of counterparts, each of which shall be deemed an original, but all such counterparts together shall constitute one and the same instrument.

E. Entire Agreement. This Agreement is the entire agreement between the parties. No other agreements, oral or written, have been entered into with respect to the subject matter of this Agreement.

F. Governing Law. The validity, interpretation, and performance of this Agreement shall be governed by and construed in accordance with the laws of the State of California.

G. Notices. All notices under this Agreement must be in writing and sent by prepaid airmail and electronic mail as follows:

To University:
San José State University
One Washington Square
San José, CA 95192
Attn: Shannon Cavanaugh-Pareño
shannon.cavanaugh-pareno@sjsu.edu

To Learning Site:
Burbank Unified School District
1900 W. Olive Ave
Burbank, CA 91506
Attn: Oscar Macias
Phone: (818) 729-4422
Email: oscarmacias@burbankusd.org

X. **EXECUTION**

By signing below, each of the following represent that they have authority to execute this Agreement and to bind the party on whose behalf their signature is made.

Trustees		**Learning Site**	
By:		By:	
Name		Name	Oscar Macias, Ed.D
Title:		Title:	Interim Superintendent
Date:		Date:	

Burbank Unified School District
Instructional Services

REPORT TO THE BOARD

To: Members of the Board of Education

From: Peter Knapik, Assistant Superintendent of Educational Services

Prepared By: Juan Noguera, Director of Adult Education

Submitted By: Laura Erisman, Administrative Secretary

Date: May 7, 2026

Subject: Approval of Agreement between Burbank Adult School and Evolo AI

Background

Evolo AI is an App that helps students succeed by locating job opportunities as they complete their training at schools. Students can apply for jobs through the application, and the outcomes of those applications are reported to the school as data is collected to reflect the effort of helping students obtain jobs. Therefore, the application connects the student and the school with potential employers generating important data that is required by the state to justify funding.

Discussion/Issues

At Burbank Adult School, faculty/staff is committed to supporting all adult learners to get trained and find jobs as they complete their classes. However, it's extremely difficult to track them once they complete the programs and leave the school. Collecting data and showing positive outcomes is a requirement from the state to validate and justify receiving funds from the California Adult Education Program (CAEP). The Evolo AI app can be used to collect data to help students with the following:

- Take the stress out of job hunting. Whenever the student applies for a position, the app will automatically initiate a conversation with the employer.
- Help students build a standout profile in minutes. It will also showcase the students' skills.
- Once a student gets a job, the app will generate a report to be shared with the LARAEC consortium. This annual report goes to the California Adult Education Program (CAEP).

It's important to note that students do not need to share any personal information on this application, and it is not mandatory to participate.

Fiscal Implications

The estimated cost for the Evolo AI app service is $15,000, which will be paid with California Adult Education Program (CAEP) funds. The duration of the contract will be from June 1, 2026 to May 31, 2027.

Recommendations

Peter Knapik, Assistant Superintendent of Educational Services, recommends that the Board of Education approve the Burbank Unified School District/Burbank Adult School and Evolo AI agreement, not to exceed $ 15,000.00 (11.0-63910.0-41102-10000-5840-5330000) - $3,750 (11.0-63910.0-41104-10000-5840-5330000) - $7,500, (11.0-63910.0-41106-10000-5840-5330000), as presented.

Evolo AI Pilot Program Quote for Burbank Adult School

From: Yusair, Inc.

1110 N Virgil Ave, LA, CA 90029 | Amir Abbasi | Co-founder | (818) 433-5803

To: Burbank Adult School

3811 W Allan Ave, Burbank, CA 91505 | Juan Noguera, Director

Quote Amount

$15,000

Quote Date

March 25, 2026

1

Program Duration

12-Month Pilot | June 1, 2026 – May 31, 2027

2

Quote Validity

60 Days | Expires: May 25, 2026 | Taxes excluded

Taxes assessed per CA state/local rates at contract execution.

Burbank Adult School	Yusair Inc.
By: _____	By: _____
Name:	Name: Amir Abbasi
Title:	Title: Co-founder

Burbank Unified School District
Instructional

REPORT TO THE BOARD

TO:	Members of the Board of Education
FROM:	Peter Knapik, Assistant Superintendent of Educational Services
PREPARED BY:	Juan Noguera, Director of Adult Education
SUBMITTED BY:	Laura Erisman, Administrative Secretary
DATE:	May 7, 2026
SUBJECT:	Approval of Agreement between Burbank Adult School and Edmentum Learning Software for the 2026-2027 CTE program

---

Background:

Burbank Adult School (BAS) has committed to providing high-quality instruction to ensure that all its students acquire the skills to become successful individuals in the community. With the purpose to accomplish this mission, BAS has done some research and piloted Edmentum Software. Developed by industry experts and exclusively designed for adult learners, the Edmentum learning system consistently drives industry-leading results for low-level literacy through high school equivalency and onto certification preparation and employability skills. It is focused on core academic areas, along with skills for ABE and GED/HSE test preparation, and CTE courses. Edmentum courses are designed to adapt to either self-paced, direct instruction, or independent study models. Students can access their courses whenever and wherever learning takes place. This flexibility allows adult educators to create customized assignments for individual students or an entire class, and the flexibility to deploy them on-site or via distance learning.

Discussion/Issues:

After piloting Edmentum learning software in the information technology classes, we believe that this software will enhance the student learning experience at BAS. CTE teachers can use the software as a supplement curriculum to ensure better performance when students work towards their goals . When using the Edmentum Software, students can work on their own, completing asynchronous work which will expand and reinforce their learning. Students are assigned seats on the platform, allowing them access to extra curricular activities that they can complete in class or during their free time at work or home, increasing the level of engagement and keeping them on target to accomplish their goals. Further, at BAS, we are committed to providing opportunities for all our CTE students. We have experienced that many CTE students need extra to acquire the skills beyond the classrooms to become certified.

Fiscal Impact:

Not to exceed $19,914.00 paid from the California Adult Education funds.

Recommendation:

Peter Knapik, Assistant Superintendent of Educational Services, recommends that the Board of Education approve the agreement between Burbank Adult School and Edmentum effective immediately, not to exceed $19,914.00 (11.0-63910.0-41104-10000-5840-5330000) and the authority to sign the Agreement be exercised pursuant to BUSD – AR 3314 as presented.

edmentum

Date:	04/22/2026
Order Number:	Q-748308-A
Revision:	1
Order Form Expiration Date:	05/29/2026

ORDER FORM

Customer and Billing Address

Customer No.:	225137
Customer Name:	Burbank Adult School
Billing Address:	3811 W Allan Ave Burbank, CA 91505-1897

Products and Services

4/13/26 - 4/12/27

Products	Qty	License Start Date	License End Date	License Term (Months)
Courseware: Career Library - Program License	100	04/13/2026	04/12/2027	12
MajorClarity Platform License - Site Wide (Up to 2785 Students)	1	04/13/2026	04/12/2027	12
Customer Success Services, including MajorClarity online session max 2 hours for groups of 40 or less	1	04/13/2026	04/12/2027	12

4/13/26 - 4/12/27 Subtotal: $19,914.00

Total US Funds: $19,914.00

This Order shall have an effective date ("Effective Date") which is the earlier of (a) the date we accept your signed Order Form or (b) the initial License Start Date, if any, applicable to the products listed in the order summary above ("Order Summary") and shall remain in effect through the end of the Term.

The pricing listed above reflects promotional rates valid through **April 30th, 2026**. Orders placed after this date will be subject to standard pricing. Promotional pricing applies to the products and quantities listed in this quote only.

To the extent this Order includes Purchases of Enrollment Products, they are governed by the terms and conditions listed in Appendix A. For all other products, unless otherwise specified in the Order Summary, the Start Date for your software subscription license(s) will be the date on which we have accepted your order and have issued log-in credentials. In the case of a purchase for multiple successive subscription licenses, the Start Date for each successive subscription will be the day immediately following the License Term expiration of the preceding license subscription.

*** Services purchased are valid for an annual term. Any service offering that is not used during the applicable term will expire and cannot be carried over or used in subsequent periods.

Taxes

Prices shown above do not include any state and local taxes that may apply. Any such taxes are the responsibility of the Customer and will appear on the final invoice. If the contracting entity is exempt from sales tax, please send the applicable tax exemption certificate to

edmentum

Date:	04/22/2026
Order Number:	Q-748308-A
Revision:	1
Order Form Expiration Date:	05/29/2026

ORDER FORM

orders@edmentum.com or attach the certificate to this order form in the Signature section. We reserve the right to pursue collections to the fullest extent permitted by law for sales taxes that have been charged on invoices submitted prior to our receipt of a valid tax exemption certificate.

Invoicing and Payment Terms

The full amount of your Order will be invoiced on the Effective Date or in accordance with the payment schedule shown below, if any.

You agree to pay all invoices within 15 days of receipt. Although we will generally not invoice you until after you enroll, use, or access, we reserve the right to immediately invoice you for any services you purchase.

Payment Due Date	Amount
05/14/2026	$19,914.00

Terms and Conditions

For the purposes of this Order Form, "you" and "your" refer to Customer, and "we", "us" and "our" refer to Edmentum Inc. and affiliates.

This Order Form and any documents it incorporates (including the Standard Purchase and License Terms located at http://www.edmentum.com/standardterms and the documents it references) form the entire agreement between you and us ("Agreement"). You acknowledge that any terms and conditions in your purchase order or any other documents you provide that enhance our obligations or restrictions or contradict the Agreement do not have force and effect. If this Agreement includes Professional Services, they are more fully described herein, in the Standard Terms and/or on an attached Statement of Work.

Purchase Order

This Agreement is non-cancellable. You will submit a purchase order to us for the full amount of this Order Form or, if applicable, for the amount listed on the first payment due date in Invoicing and Payment Terms, followed by additional purchase orders according to the Invoicing and Payment Terms. Your Order will not be scheduled for delivery until a conforming purchase order referencing this Order Form is submitted.

To the extent applicable, you will submit additional purchase orders ("Subsequent Purchase Orders") within ten (10) days of our notice to you that your Enrollment Products Purchases, in the aggregate, have exceeded the amount identified in the Initial Purchase Order for such products. If we waive a Subsequent Purchase Order requirement, you agree to pay the amounts identified on our invoice.

Acceptance

This offer will expire on the Order Form Expiration Date noted above unless we earlier withdraw or extend the offer in writing.

I represent that I have read the terms and conditions included in this Agreement, that I am authorized to accept this offer and the Agreement's terms and conditions on behalf of the customer identified above and that I do accept this offer on behalf of the customer who agrees to adhere to the Agreement's terms and conditions. To the extent that either parties process does not require that I execute this Order Form, I accept, acknowledge and agree to the terms and conditions identified in and referenced in this Agreement as signified by my receipt, use or access of the products and/or services identified.

Invoice Contact Information – Please Provide Your Finance Dept Contact Information

edmentum

Date:	04/22/2026
Order Number:	Q-748308-A
Revision:	1
Order Form Expiration Date:	05/29/2026

ORDER FORM

First Name: Cory

Last Name: Hartung

Email Address: Coryhartung@burbankusd.org

Customer Signature

Name (Printed or Typed) Juan Noguera

Title Director

Date 4/23/2026

Burbank Unified School District
Special Education Department

REPORT TO THE BOARD

TO:	Members of the Board of Education
FROM:	Peter Knapik, Assistant Superintendent of Educational Services
PREPARED BY:	Jennifer Nicholson, Director of Special Education and Psychological Services
SUBMITTED BY:	Sandra Shearer, Administrative Secretary II
DATE:	May 7, 2026
SUBJECT:	Approval of Agreement for Professional Services Provided by Hathaway-Sycamores Child and Family Services for Special Education

---

Background:

Since 2017 the District has contracted with Hathaway-Sycamores Child and Family Services, a non-public agency from Pasadena, CA, to provide therapeutic services to students who attend Magnolia Park School, a Special Education Local Plan Area (SELPA) program for students with significant emotional and behavioral challenges. Magnolia Park is located on District property, adjacent to the school site of Monterey High School. The costs for student mental health services at Magnolia Park have historically been shared between three unified school districts (Burbank, Glendale, and La Canada) that comprise the Foothill SELPA. The rationale for contracting with this particular vendor was based on its ability to provide more direct on-site and community based Educational Support Services (ESS) to students enrolled at the school. ESS services are intensive mental health services provided to students during the week at school, at home and in the community.

District-Wide Goals, 2021-2022:

1.2 Continue developing and assessing intervention programs specifically for students who qualify for services as English learners, low-socioeconomic, homeless, foster youth, and Special Education students.

Discussion/Issues:

The rationale for contracting with Hathaway-Sycamores was based on their ability to provide more direct on-site and community based Educational Support Services (ESS) to students enrolled at the school. ESS services are intensive mental health services provided to students during the week at school, at home and in the community. These ESS services included twenty-four hour-a-day crisis intervention and after-care management. This embedded support team model has been successful in providing much more direct support for (all) students than had previously been provided by agencies in the past. Furthermore, this model of service delivery reduced the need for individually contracted ESS services at Magnolia Park. The current proposal is to continue with the same service delivery model for the 2026/2027 school year.

Fiscal Impact:

Not to exceed $236,453.44 from Special Education Mental Health funds for the 2025/2026 school year. As per agreement between the SELPA and the District, BUSD will incur these costs (up- front) and at the end of the school year, the program's expenses will be apportioned per Average Daily Attendance (ADA), based on District of residence, and each of the three districts will be expected to cover their students' costs.

Recommendation:

Peter Knapik, Assistant Superintendent of Educational Services recommends that the Board of Education approve an agreement between the Burbank Unified School District and Hathaway Sycamores, to provide Educationally Related Mental Health services for Special Education students at Magnolia Park School, not to exceed $236,453.44 (1.0-33270.0-57601-11800-5810-7440000 = $198,620.88 and 01.0-65460.0-57601-1180-5810-7440000 = $37,832.56). Effective July 1, 2026 through June 30, 2027, and that authority to sign the agreement be exercised pursuant to BUSD-AR 3314, as presented.

Burbank Unified School District
1900 West Olive Avenue, Burbank, 91506
Tel: (818) 729-4473
Fax: (818) 729-4573
www.burbankusd.org

TERMS OF AGREEMENT

This Agreement, made and entered into this 21st day of April 2026 by and between the **Burbank Unified School District**, hereinafter referred to as "District", and Hathaway-Sycamores Child and Family Services hereinafter referred to as "Provider."

Payee's Name: Hathaway-Sycamores Child and Family Services

Daytime Phone Number: 626-395-7100 X5365

Mailing Address: 840 N. Avenue 66 Los Angeles, CA 90042

Email Address: MFlaherty@sycamores.org

Sponsoring Administrator: Peter Knapk (Print Name) Assistant Superintendent (Title) _____ (Signature) Special Education (Location)

Board Approval: 05/07/2026 Account Code: 01.0-33270.0-57601-11800-5810-7440000 ($198,620.88)
01.0-65460.0-57601-11800-5810-7440000 ($37,832.56)

The District is authorized pursuant to Education Code section 35160 and Government Code Section 53060 to contract for the services of Providers.

WHEREAS, the Provider is especially trained, experienced and competent to provide such services;

WHEREAS, in consideration of the mutual promises of the parties, hereto, the District hereby retains the Provider upon the terms and conditions hereinafter set forth, and the Provider hereby accepts said retention and agrees to perform the services hereinafter mentioned, upon said terms and conditions;

The parties mutually agree as follows:

1. The Provider agrees to perform the following services for the District, at a total not to exceed **$236,453.44**
2. The term of the Agreement shall be the period commencing on: 07/01/2026 and terminating on: 06/30/2027.
3. Payment Terms: Net 45 Days
4. District desires to enter into an Agreement in which Hathaway-Sycamores Child and Family Services will provide mental health and case management services for students who attend Magnolia Park School.
5. The Provider shall provide a clear and concise invoice noting the time spent in providing the services and preparing the products required by this Agreement. Provider will be paid at the conclusion of this contract unless otherwise stated in the payment terms above.
6. It is expressly understood and agreed to by both parties hereto that the Provider, while engaged in carrying out and complying with any of the terms and conditions of this contract, is an independent contractor and is not an officer, agent or employee of the aforesaid District.

7. Provider agrees to defend, indemnify, save, and hold harmless the District, its governing body, the individual members thereof, and all officers, agents and employees of the District from all loss, cost, and expense arising out of any liability or claim of liability for injury, damage, or loss sustained or claimed to have been sustained arising out of, or occurring as a result of Provider's performance or failure to perform services under this Agreement.

8. This agreement may be terminated at any time based upon the mutual agreement of the parties hereto. This agreement may also be terminated immediately by the District should the Provider breach this agreement or fail to perform the required services in a satisfactory manner.

9. Provider agrees to pay all Federal, State and Local taxes, and fees that are owed as a result of payments made to Provider pursuant to this agreement. Provider agrees to indemnify and hold harmless the District from any and all costs, loss, or liability whatsoever arising from or caused by any challenge to the payments made to Provider pursuant to this agreement, including but not limited to any liabilities or penalties assessed or levied by any and all local, state, or federal taxing authorities against the District.

10. Provider agrees to ensure that they do not exceed the applicable earnings limitation under CALPERS or STRS and agrees to be solely responsible for any actions taken by CALPERS or STRS as a result of exceeding the applicable earnings limitation.

11. District and Provider will communicate and send in writing all information received by the District regarding any work-related injury to Personnel within twenty-four hours of the injury.

12. Communicate within twenty-four hours to Hathaway-Sycamores Child and Family Services the details of any incident, which may result in a complaint against any Personnel regarding professional services given by the Personnel.

13. The District agrees to indemnify, defend and hold harmless Hathaway-Sycamores Child and Family Services from any and all negligence and all liabilities, claims, losses, costs, damages and expenses resulting or arising from or connected with the services rendered by the District, its agents, independent contractors, employees or servants pursuant to this contract.

14. This Agreement shall constitute the entire Agreement between the parties and any prior understanding or representation of any kind preceding the date of this Agreement shall not be binding upon either party except to the extent incorporated in this Agreement.

15. It is mutually agreed that both parties shall not discriminate against any individual in the performance of their obligations under this Agreement, on the basis of race, color, religion, national origin, sex, age or disability. Both parties further certify compliance with the applicable provisions of the Civil Rights Act of 1964, the Rehabilitation Act of 1973, and the Americans with Disabilities Act and State anti-discrimination laws.

INDEMNIFICATION

Hathaway-Sycamores Child and Family Services shall save and hold the District harmless from and against and shall indemnify District for any liability, loss, cost, expense or damage whatsoever caused by reason of any injury sustained by any person or to property by reason of any act, neglect, default or omission of Hathaway-Sycamores Child and Family Services or any of its agents, subcontractors, employees or other representatives. If District is sued in any court for damages by reason of any of the acts of Hathaway-Sycamores Child and Family Services, its agents, subcontractors, employees or other representatives referred to in this Agreement, Hathaway-Sycamores Child and Family Services shall defend said action (or cause same to be defended) as its own expense and shall pay any discharge and judgment that may be rendered in any such action. If Hathaway-Sycamores Child and Family Services fails or neglects to so defend said action, District may defend the same and any expenses, including reasonable Attorney fees, which District may pay or incur in defending said action and the amount of any judgment which District may be required to pay shall be promptly reimbursed by Hathaway-Sycamores Child and Family Services demand.

District shall save and hold Hathaway-Sycamores Child and Family Services, harmless from and against and shall indemnify Hathaway-Sycamores Child and Family Services for any liability, loss, cost, expense or damage whatsoever caused by reason of any injury sustained by any person or to property by reason of any act, neglect, default or omission of District, or any of its agents, subcontractors, employees or other representatives. If Hathaway-Sycamores Child and Family Services is sued in any court for damages by reason of any of the acts of the District, its agents,

subcontractors, employees or other representatives referred to in this Agreement, District shall defend said action (or cause same to be defended) as its own expense and shall pay any discharge and judgment that may be rendered in any such action. If District fails or neglects to so defend said action, Hathaway-Sycamores Child and Family Services may defend the same and any expenses, including reasonable attorney's fees, which Hathaway-Sycamores Child and Family Services may pay or incur in defending said action and the amount of any judgment which Hathaway-Sycamores Child and Family Services may be required to pay shall be promptly reimbursed by District upon demand.

ARBITRATION

Any controversy or claim arising out of or relating to this Agreement, or the performance or breach thereof, shall be settled by means of binding arbitration in accordance with the rules of the American Arbitration Association, at Los Angeles, California.

If either party to this Agreement institutes any legal action or proceeding against the other party to the Agreement arising out of the Agreement, the prevailing party shall be entitled to recover its reasonable attorney's fees and costs from the non-prevailing party.

ACKNOWLEDGED AND AGREED TO

District:

Burbank Unified School District

District/Company Name

Jennifer Nicholson

Print Representative Name

Director of Special Education

Title

Signature

Date

ACKNOWLEDGED AND AGREED TO

Provider:

Hathaway-Sycamores Child and Family Services

Provider/Company

Print Representative Name

Title

Signature

Date

Burbank Unified School District
Special Education Department

REPORT TO THE BOARD

TO:	Members of the Board of Education
FROM:	Peter Knapik, Assistant Superintendent of Educational Services
PREPARED BY:	Jennifer Nicholson, Director of Special Education and Psychological Services
SUBMITTED BY:	Sandra Shearer, Administrative Secretary II
DATE:	May 7, 2026
SUBJECT:	Approval of Agreement for Professional Services Provided by Hathaway-Sycamores Child and Family Services for Special Education

---

Background:

Since 2017 the District has contracted with Hathaway-Sycamores Child and Family Services, a non-public agency from Pasadena, CA, to provide therapeutic services to students who attend Magnolia Park School, a Special Education Local Plan Area (SELPA) program for students with significant emotional and behavioral challenges. Magnolia Park is located on District property, adjacent to the school site of Monterey High School. The costs for student mental health services at Magnolia Park have historically been shared between three unified school districts (Burbank, Glendale, and La Canada) that comprise the Foothill SELPA. The rationale for contracting with this particular vendor was based on its ability to provide more direct on-site and community based Educational Support Services (ESS) to students enrolled at the school. ESS services are intensive mental health services provided to students during the week at school, at home and in the community.

District-Wide Goals, 2021-2022:

1.2 Continue developing and assessing intervention programs specifically for students who qualify for services as English learners, low-socioeconomic, homeless, foster youth, and Special Education students.

Discussion/Issues:

The rationale for contracting with Hathaway-Sycamores was based on their ability to provide more direct on-site and community based Educational Support Services (ESS) to students enrolled at the school. ESS services are intensive mental health services provided to students during the week at school, at home and in the community. These ESS services included twenty-four hour-a-day crisis intervention and after-care management. This embedded support team model has been successful in providing much more direct support for (all) students than had previously been provided by agencies in the past. Furthermore, this model of service delivery reduced the need for individually contracted ESS services at Magnolia Park. The current proposal is to continue with the same service delivery model for the 2026/2027 school year.

Fiscal Impact:

Not to exceed $489,778.39 from Special Education Mental Health funds for the 2026/2027 school year. As per agreement between the SELPA and the District, BUSD will incur these costs (up- front) and at the end of the school year, the program's expenses will be apportioned per Average Daily Attendance (ADA), based on District of residence, and each of the three districts will be expected to cover their students' costs.

Recommendation:

Peter Knapik, Assistant Superintendent of Educational Services recommends that the Board of Education approve an agreement between the Burbank Unified School District and Hathaway Sycamores, to provide Educationally Related Mental Health services for Special Education students at Magnolia Park School, not to exceed $489,778.39 (01.0-65460.0-57601-1180-5810-7440000) Effective July 1, 2026 through June 30, 2027, and that authority to sign the agreement be exercised pursuant to BUSD-AR 3314, as presented.

Burbank Unified School District
1900 West Olive Avenue, Burbank, 91506
Tel: (818) 729-4473
Fax: (818) 729-4573
www.burbankusd.org

TERMS OF AGREEMENT

This Agreement, made and entered into this 21st day of April 2026 by and between the **Burbank Unified School District**, hereinafter referred to as "District", and Hathaway-Sycamores Child and Family Services hereinafter referred to as "Provider."

Payee's Name: Hathaway-Sycamores Child and Family Services

Daytime Phone Number: 626-395-7100 X5365

Mailing Address: 840 N. Avenue 66 Los Angeles, CA 90042

Email Address: MFlaherty@sycamores.org

Sponsoring Administrator: Peter Knapik (Print Name) Assistant Superintendent (Title) _____ (Signature) Special Education (Location)

Board Approval: 05/07/2026 Account Code: 01.0-65460.0-57601-11800-5810-7440000

The District is authorized pursuant to Education Code section 35160 and Government Code Section 53060 to contract for the services of Providers.

WHEREAS, the Provider is especially trained, experienced and competent to provide such services;

WHEREAS, in consideration of the mutual promises of the parties, hereto, the District hereby retains the Provider upon the terms and conditions hereinafter set forth, and the Provider hereby accepts said retention and agrees to perform the services hereinafter mentioned, upon said terms and conditions;

The parties mutually agree as follows:

1. The Provider agrees to perform the following services for the District, at a total not to exceed **$489,778.39**
2. The term of the Agreement shall be the period commencing on: 07/01/2026 and terminating on: 06/30/2027.
3. Payment Terms: Net 45 Days
4. District desires to enter into an Agreement in which Hathaway-Sycamores Child and Family Services will provide mental health and case management services for the **Foothill SELPA Program.**
5. The Provider shall provide a clear and concise invoice noting the time spent in providing the services and preparing the products required by this Agreement. Provider will be paid at the conclusion of this contract unless otherwise stated in the payment terms above.
6. It is expressly understood and agreed to by both parties hereto that the Provider, while engaged in carrying out and complying with any of the terms and conditions of this contract, is an independent contractor and is not an officer, agent or employee of the aforesaid District.

7. Provider agrees to defend, indemnify, save, and hold harmless the District, its governing body, the individual members thereof, and all officers, agents and employees of the District from all loss, cost, and expense arising out of any liability or claim of liability for injury, damage, or loss sustained or claimed to have been sustained arising out of, or occurring as a result of Provider's performance or failure to perform services under this Agreement.

8. This agreement may be terminated at any time based upon the mutual agreement of the parties hereto. This agreement may also be terminated immediately by the District should the Provider breach this agreement or fail to perform the required services in a satisfactory manner.

9. Provider agrees to pay all Federal, State and Local taxes, and fees that are owed as a result of payments made to Provider pursuant to this agreement. Provider agrees to indemnify and hold harmless the District from any and all costs, loss, or liability whatsoever arising from or caused by any challenge to the payments made to Provider pursuant to this agreement, including but not limited to any liabilities or penalties assessed or levied by any and all local, state, or federal taxing authorities against the District.

10. Provider agrees to ensure that they do not exceed the applicable earnings limitation under CALPERS or STRS and agrees to be solely responsible for any actions taken by CALPERS or STRS as a result of exceeding the applicable earnings limitation.

11. District and Provider will communicate and send in writing all information received by the District regarding any work-related injury to Personnel within twenty-four hours of the injury.

12. Communicate within twenty-four hours to Hathaway-Sycamores Child and Family Services the details of any incident, which may result in a complaint against any Personnel regarding professional services given by the Personnel.

13. The District agrees to indemnify, defend and hold harmless Hathaway-Sycamores Child and Family Services from any and all negligence and all liabilities, claims, losses, costs, damages and expenses resulting or arising from or connected with the services rendered by the District, its agents, independent contractors, employees or servants pursuant to this contract.

14. This Agreement shall constitute the entire Agreement between the parties and any prior understanding or representation of any kind preceding the date of this Agreement shall not be binding upon either party except to the extent incorporated in this Agreement.

15. It is mutually agreed that both parties shall not discriminate against any individual in the performance of their obligations under this Agreement, on the basis of race, color, religion, national origin, sex, age or disability. Both parties further certify compliance with the applicable provisions of the Civil Rights Act of 1964, the Rehabilitation Act of 1973, and the Americans with Disabilities Act and State anti-discrimination laws.

INDEMNIFICATION

Hathaway-Sycamores Child and Family Services shall save and hold the District harmless from and against and shall indemnify District for any liability, loss, cost, expense or damage whatsoever caused by reason of any injury sustained by any person or to property by reason of any act, neglect, default or omission of Hathaway-Sycamores Child and Family Services or any of its agents, subcontractors, employees or other representatives. If District is sued in any court for damages by reason of any of the acts of Hathaway-Sycamores Child and Family Services, its agents, subcontractors, employees or other representatives referred to in this Agreement, Hathaway-Sycamores Child and Family Services shall defend said action (or cause same to be defended) as its own expense and shall pay any discharge and judgment that may be rendered in any such action. If Hathaway-Sycamores Child and Family Services fails or neglects to so defend said action, District may defend the same and any expenses, including reasonable Attorney fees, which District may pay or incur in defending said action and the amount of any judgment which District may be required to pay shall be promptly reimbursed by Hathaway-Sycamores Child and Family Services demand.

District shall save and hold Hathaway-Sycamores Child and Family Services, harmless from and against and shall indemnify Hathaway-Sycamores Child and Family Services for any liability, loss, cost, expense or damage whatsoever caused by reason of any injury sustained by any person or to property by reason of any act, neglect, default or omission of District, or any of its agents, subcontractors, employees or other representatives. If Hathaway-Sycamores Child and Family Services is sued in any court for damages by reason of any of the acts of the District, its agents,

subcontractors, employees or other representatives referred to in this Agreement, District shall defend said action (or cause same to be defended) as its own expense and shall pay any discharge and judgment that may be rendered in any such action. If District fails or neglects to so defend said action, Hathaway-Sycamores Child and Family Services may defend the same and any expenses, including reasonable attorney's fees, which Hathaway-Sycamores Child and Family Services may pay or incur in defending said action and the amount of any judgment which Hathaway-Sycamores Child and Family Services may be required to pay shall be promptly reimbursed by District upon demand.

ARBITRATION

Any controversy or claim arising out of or relating to this Agreement, or the performance or breach thereof, shall be settled by means of binding arbitration in accordance with the rules of the American Arbitration Association, at Los Angeles, California.

If either party to this Agreement institutes any legal action or proceeding against the other party to the Agreement arising out of the Agreement, the prevailing party shall be entitled to recover its reasonable attorney's fees and costs from the non-prevailing party.

ACKNOWLEDGED AND AGREED TO

District:

Burbank Unified School District

District/Company Name

Jennifer Nicholson

Print Representative Name

Director of Special Education

Title

Signature

Date

ACKNOWLEDGED AND AGREED TO

Provider:

Hathaway-Sycamores Child and Family Services

Provider/Company

Print Representative Name

Title

Signature

Date

Burbank Unified School District
Special Education Department

REPORT TO THE BOARD

TO:	Members of the Board of Education
FROM:	Peter Knapik, Assistant Superintendent of Educational Services
PREPARED BY:	Jennifer Nicholson, Director of Special Education and Psychological Services
SUBMITTED BY:	Sandra Shearer, Administrative Secretary II
DATE:	May 7, 2026
SUBJECT:	Approval of Amended Agreement for Professional Services Provided by Sarah Knauff Speech-Language Pathology, Inc. for Special Education

Background:

The Board of Education is being asked to amend an agreement for professional services to hire an outside Speech-Language Pathologist (SLP) (as a consultant) to provide support and assessments to Special Education students. The consultant will assist with assessments, writing the assessment reports, supporting students and attending IEP's of Special Education Students.

Discussion/Issues:

The District is obligated to provide assessments and implement Individualized Education Plans (IEP's) for students who attend our schools. The District does not have current staff available to support caseload overage and is, therefore, contracting with a consultant to remain in compliance with IEP and Ed Code regulations.

Fiscal Impact:

Not to exceed $212,450.

Recommendation:

Peter Knapik, Assistant Superintendent of Educational Services, recommends that the Board of Education amend an agreement between Burbank Unified School District and Sarah Knauff Speech-Language Pathology, Inc., to provide a Speech-Language Pathologist (SLP), not to exceed $212,450 (01.0-65000.0-57602-11901-5850-7440000), effective July 1, 2025 through June 30, 2026, and that authority to sign the agreement be exercised pursuant to BUSD-AR 3314, as presented.

Note: The original approval date was June 18, 2025 for a total not to exceed $202,450. Due to an increase in student need, this amendment adds an additional $10,000 to the agreement for a new not to exceed total of $212,450.

Burbank Unified School District
1900 West Olive Avenue, Burbank, 91506
Tel: (818) 729-4473
Fax: (818) 729-4573
www.burbankusd.org

TERMS OF AMENDED AGREEMENT

This Agreement, made and entered into this 3rd day of April 2026 by and between the **Burbank Unified School District**, hereinafter referred to as "District", and Sarah Knauff Speech-Language Pathology, Inc. hereinafter referred to as "Provider."

Payee's Name: Sarah Knauff Speech-Language Pathology, Inc. Daytime Phone Number: 803-760-9464

Mailing Address: 12334 Huston Street Valley Village, CA 91607

Email Address: saraheknauff@gmail.com

Sponsoring Administrator: Peter Knapik (Print Name) Assistant Superintendent (Title) (Signature) Special Education (Location)

Board Approval: ~~06/18/2025~~ 05/07/2026 Account Code: 01.0-65000.0-57602-11901-5850-7440000

The District is authorized pursuant to Education Code section 35160 and Government Code Section 53060 to contract for the services of Providers.

WHEREAS, the Provider is especially trained, experienced and competent to provide such services;

WHEREAS, in consideration of the mutual promises of the parties, hereto, the District hereby retains the Provider upon the terms and conditions hereinafter set forth, and the Provider hereby accepts said retention and agrees to perform the services hereinafter mentioned, upon said terms and conditions;

The parties mutually agree as follows:

1. The Provider agrees to perform the following services for the District, at a rate of $120.50 per hour for a total not to exceed ~~**$202,450**~~ **$212,450.**

2. The term of the Agreement shall be the period commencing on: July 1, 2025 and terminating on: June 30, 2026.

3. Payment Terms: Net 45 Days

4. District desires to enter into an Agreement in which Sarah Knauff Speech Therapy will provide assessments and speech and language services to special education students, up to 40 hours a week during the 2024-2025 extended school year (July only), 2025-2026 regular school year and extended school year (June only).

5. The Provider shall provide a clear and concise invoice noting the time spent in providing the services and preparing the products required by this Agreement. Provider will be paid at the conclusion of this contract unless otherwise stated in the payment terms above.

6. It is expressly understood and agreed to by both parties hereto that the Provider, while engaged in carrying out and complying with any of the terms and conditions of this contract, is an independent contractor and is not an officer, agent or employee of the aforesaid District.

7. Provider agrees to defend, indemnify, save, and hold harmless the District, its governing body, the individual members thereof, and all officers, agents and employees of the District from all loss, cost, and expense arising out of any liability or claim of liability for injury, damage, or loss sustained or claimed to have been sustained arising out of, or occurring as a result of Provider's performance or failure to perform services under this Agreement.

8. This agreement may be terminated at any time based upon the mutual agreement of the parties hereto. This agreement may also be terminated immediately by the District should the Provider breach this agreement or fail to perform the required services in a satisfactory manner.

9. Provider agrees to pay all Federal, State and Local taxes, and fees that are owed as a result of payments made to Provider pursuant to this agreement. Provider agrees to indemnify and hold harmless the District from any and all costs, loss, or liability whatsoever arising from or caused by any challenge to the payments made to Provider pursuant to this agreement, including but not limited to any liabilities or penalties assessed or levied by any and all local, state, or federal taxing authorities against the District.

10. Provider agrees to ensure that they do not exceed the applicable earnings limitation under CALPERS or STRS and agrees to be solely responsible for any actions taken by CALPERS or STRS as a result of exceeding the applicable earnings limitation.

11. District and Provider will communicate and send in writing all information received by the District regarding any work-related injury to Personnel within twenty-four hours of the injury.

12. Communicate within twenty-four hours to Sarah Knauff Speech Therapy the details of any incident, which may result in a complaint against any Personnel regarding professional services given by the Personnel.

13. The District agrees to indemnify, defend and hold harmless Sarah Knauff Speech Therapy from any and all negligence and all liabilities, claims, losses, costs, damages and expenses resulting or arising from or connected with the services rendered by the District, its agents, independent contractors, employees or servants pursuant to this contract.

14. This Agreement shall constitute the entire Agreement between the parties and any prior understanding or representation of any kind preceding the date of this Agreement shall not be binding upon either party except to the extent incorporated in this Agreement.

15. It is mutually agreed that both parties shall not discriminate against any individual in the performance of their obligations under this Agreement, on the basis of race, color, religion, national origin, sex, age or disability. Both parties further certify compliance with the applicable provisions of the Civil Rights Act of 1964, the Rehabilitation Act of 1973, and the Americans with Disabilities Act and State anti-discrimination laws.

INDEMNIFICATION

Sarah Knauff Speech Therapy shall save and hold the District harmless from and against and shall indemnify District for any liability, loss, cost, expense or damage whatsoever caused by reason of any injury sustained by any person or to property by reason of any act, neglect, default or omission of Sarah Knauff Speech Therapy or any of its agents, subcontractors, employees or other representatives. If District is sued in any court for damages by reason of any of the acts of Sarah Knauff Speech Therapy, its agents, subcontractors, employees or other representatives referred to in this Agreement, Sarah Knauff Speech Therapy shall defend said action (or cause same to be defended) as its own expense and shall pay any discharge and judgment that may be rendered in any such action. If Sarah Knauff Speech Therapy fails or neglects to so defend said action, District may defend the same and any expenses, including reasonable Attorney fees, which District may pay or incur in defending said action and the amount of any judgment which District may be required to pay shall be promptly reimbursed by Sarah Knauff Speech Therapy demand.

District shall save and hold Sarah Knauff Speech Therapy, harmless from and against and shall indemnify Sarah Knauff Speech Therapy for any liability, loss, cost, expense or damage whatsoever caused by reason of any injury sustained by any person or to property by reason of any act, neglect, default or omission of District, or any of its agents, subcontractors, employees or other representatives. If Sarah Knauff Speech Therapy is sued in any court for damages by reason of any of the acts of the District, its agents, subcontractors, employees or other representatives referred to in this Agreement, District shall defend said action (or cause same to be defended) as its own expense and shall pay any discharge and judgment that may be rendered in any such action. If District fails or neglects to so defend said action, Sarah Knauff Speech Therapy may defend the same and any expenses, including reasonable attorney's fees, which Sarah Knauff Speech Therapy may pay or incur in defending said action and the amount of any judgment which Sarah Knauff Speech Therapy may be required to pay shall be promptly reimbursed by District upon demand.

ARBITRATION

Any controversy or claim arising out of or relating to this Agreement, or the performance or breach thereof, shall be settled by means of binding arbitration in accordance with the rules of the American Arbitration Association, at Los Angeles, California.

If either party to this Agreement institutes any legal action or proceeding against the other party to the Agreement arising out of the Agreement, the prevailing party shall be entitled to recover its reasonable attorney's fees and costs from the non-prevailing party.

ACKNOWLEDGED AND AGREED TO

District:

Burbank Unified School District
District/Company Name

[redacted]
Jennifer Nicholson
Print Representative Name

[redacted]
Director of Special Education
Title

[redacted]
Signature

[redacted]
Date

ACKNOWLEDGED AND AGREED TO

Provider:

Sarah Knauff Speech Language Pathology, Inc.
Provider/Company

[redacted]
Sarah Knauff
Print Representative Name

[redacted]
Speech Language Pathologist
Title

[redacted]
Signature

[redacted]
April 3, 2026
Date

Burbank Unified School
District Special Education
Department

REPORT TO THE BOARD

TO:	Members of the Board of Education
FROM:	Peter Knapik, Assistant Superintendent of Educational Services
PREPARED BY:	Jennifer Nicholson, Director of Special Education and Psychological Services
SUBMITTED BY:	Sandra Shearer, Administrative Secretary II
DATE:	May 7, 2026
SUBJECT:	Approval of Amended Agreement for Professional Services Provided by LRA Interpreters, Inc. for Special Education

Background:

The Board of Education is being asked to amend an agreement for professional services to provide interpreting and translation services for special education students, pursuant to California Education Code (Sections 17604 and 35163), as presented in the Confidential Exhibit.

Discussion/Issues:

The District is currently obligated to provide services for students who are Burbank residents whose IEPs require such services. If the District does not have qualified staff to perform specific services, it is obligated to contract outside the District for such services.

Fiscal Impact:

Not to exceed $250,000.

Recommendation:

Peter Knapik, Assistant Superintendent of Educational Services, recommends that the Board of Education amend an agreement between the Burbank Unified School District and LRA Interpreters, Inc., to provide interpreting and translation services for Burbank Special Education students, not to exceed $250,000 (01.0-65000.0-57602-11901-5850-7440000), effective July 1, 2025 through June 30, 2026, and that authority to sign the agreement be exercised pursuant to BUSD-AR 3314, as presented.

Note: The original approval date was June 18, 2025 for a total not to exceed $200,000. Due to increased need of interpreting and translation, this amendment adds an additional $50,000 for a new not to exceed amount of $250,000.

Burbank Unified School District
1900 West Olive Avenue, Burbank, 91506
Tel: (818) 729-4473
Fax: (818) 729-4573
www.burbankusd.org

TERMS OF AMENDED AGREEMENT

This Agreement, made and entered into this 8th day of April 2026 by and between the **Burbank Unified School District**, hereinafter referred to as "District", and LRA Interpreters, Inc. hereinafter referred to as "Provider."

Payee's Name: LRA Interpreters, Inc. Daytime Phone Number: 818-861-7844

Mailing Address: 1608 W. Magnolia Blvd., Burbank, CA 91506 Email Address: org@lrausa.com

Sponsoring Administrator: Peter Knapik Assistant Superintendent Special Education
Print Name Title Signature Location

Board Approval: ~~06/18/2025~~ 05/07/2026 Account Code: 01.0-65000.0-57602-11901-5850-7440000

The District is authorized pursuant to Education Code section 35160 and Government Code Section 53060 to contract for the services of Providers.

WHEREAS, the Provider is especially trained, experienced and competent to provide such services;

WHEREAS, in consideration of the mutual promises of the parties, hereto, the District hereby retains the Provider upon the terms and conditions hereinafter set forth, and the Provider hereby accepts said retention and agrees to perform the services hereinafter mentioned, upon said terms and conditions;

The parties mutually agree as follows:

1. The Provider agrees to perform the following services for the District, at a rate not to exceed ~~$200,000~~ $250,000 **Amount to include speaking fee, mileage and any additional fees.

2. The term of the Agreement shall be the period commencing on: 07/01/2025 and terminating on: 06/30/2026.

3. Payment Terms: Net 45 Days

4. District desires to enter into an Agreement in which LRA Interpreters, Inc. will provide interpreters/translators for special education students. Pursuant to LRA's 2025-2026 interpreting and translating fee schedule.

5. The Provider shall provide a clear and concise invoice noting the time spent in providing the services and preparing the products required by this Agreement. Provider will be paid at the conclusion of this contract unless otherwise stated in the payment terms above.

6. It is expressly understood and agreed to by both parties hereto that the Provider, while engaged in carrying out and complying with any of the terms and conditions of this contract, is an independent contractor and is not an officer, agent or employee of the aforesaid District.

7. Provider agrees to defend, indemnify, save, and hold harmless the District, its governing body, the individual members thereof, and all officers, agents and employees of the District from all loss, cost, and expense arising out of any liability or claim of liability for injury, damage, or loss sustained or claimed to have been sustained arising out of, or occurring as a result of Provider's performance or failure to perform services under this Agreement.

8. This agreement may be terminated at any time based upon the mutual agreement of the parties hereto. This agreement may also be terminated immediately by the District should the Provider breach this agreement or fail to perform the required services in a satisfactory manner.

9. Provider agrees to pay all Federal, State and Local taxes, and fees that are owed as a result of payments made to Provider pursuant to this agreement. Provider agrees to indemnify and hold harmless the District from any and all costs, loss, or liability whatsoever arising from or caused by any challenge to the payments made to Provider pursuant to this agreement, including but not limited to any liabilities or penalties assessed or levied by any and all local, state, or federal taxing authorities against the District.

10. Provider agrees to ensure that they do not exceed the applicable earnings limitation under CALPERS or STRS and agrees to be solely responsible for any actions taken by CALPERS or STRS as a result of exceeding the applicable earnings limitation.

11. District and Provider will communicate and send in writing all information received by the District regarding any work-related injury to Personnel within twenty-four hours of the injury.

12. Communicate within twenty-four hours to LRA Interpreters, Inc. the details of any incident, which may result in a complaint against any Personnel regarding professional services given by the Personnel.

13. The District agrees to indemnify, defend and hold harmless LRA Interpreters, Inc. from any and all negligence and all liabilities, claims, losses, costs, damages and expenses resulting or arising from or connected with the services rendered by the District, its agents, independent contractors, employees or servants pursuant to this contract.

14. This Agreement shall constitute the entire Agreement between the parties and any prior understanding or representation of any kind preceding the date of this Agreement shall not be binding upon either party except to the extent incorporated in this Agreement.

15. It is mutually agreed that both parties shall not discriminate against any individual in the performance of their obligations under this Agreement, on the basis of race, color, religion, national origin, sex, age or disability. Both parties further certify compliance with the applicable provisions of the Civil Rights Act of 1964, the Rehabilitation Act of 1973, and the Americans with Disabilities Act and State anti-discrimination laws.

INDEMNIFICATION

LRA Interpreters, Inc. shall save and hold the District harmless from and against and shall indemnify District for any liability, loss, cost, expense or damage whatsoever caused by reason of any injury sustained by any person or to property by reason of any act, neglect, default or omission of LRA Interpreters, Inc. or any of its agents, subcontractors, employees or other representatives. If District is sued in any court for damages by reason of any of the acts of LRA Interpreters, Inc., its agents, subcontractors, employees or other representatives referred to in this Agreement, LRA Interpreters, Inc. shall defend said action (or cause same to be defended) as its own expense and shall pay any discharge and judgment that may be rendered in any such action. If LRA Interpreters, Inc. fails or neglects to so defend said action, District may defend the same and any expenses, including reasonable Attorney fees, which District may pay or incur in defending said action and the amount of any judgment which District may be required to pay shall be promptly reimbursed by LRA Interpreters, Inc. demand.

District shall save and hold LRA Interpreters, Inc., harmless from and against and shall indemnify LRA Interpreters, Inc. for any liability, loss, cost, expense or damage whatsoever caused by reason of any injury sustained by any person or to property by reason of any act, neglect, default or omission of District, or any of its agents, subcontractors, employees or other representatives. If LRA Interpreters, Inc. is sued in any court for damages by reason of any of the acts of the District, its agents, subcontractors, employees or other representatives referred to in this Agreement, District shall defend said action (or cause same to be defended) as its own expense and shall pay any discharge and judgment that may be rendered in any such action. If District fails or neglects to so defend said action, LRA Interpreters, Inc. may defend the same and any expenses, including reasonable attorney's fees, which LRA Interpreters, Inc. may pay or incur in defending said action and the amount of any judgment which LRA Interpreters, Inc. may be required to pay shall be promptly reimbursed by District upon demand.

ARBITRATION

Any controversy or claim arising out of or relating to this Agreement, or the performance or breach thereof, shall be settled by means of binding arbitration in accordance with the rules of the American Arbitration Association, at Los Angeles, California.

If either party to this Agreement institutes any legal action or proceeding against the other party to the Agreement arising out of the Agreement, the prevailing party shall be entitled to recover its reasonable attorney's fees and costs from the non-prevailing party.

ACKNOWLEDGED AND AGREED TO

District:

Burbank Unified School District
District/Company Name

[redacted]
Jennifer Nicholson
Print Representative Name

[redacted]
Director, Special Education
Title

[redacted]
Signature

[redacted]
Date

ACKNOWLEDGED AND AGREED TO

Provider:

LRA Interpreters, Inc.
Provider/Company

[redacted]
Nicole Rockmore
Print Representative Name

[redacted]
Title
Chief Financial Officer

[redacted]
Signature

[redacted]
April 8, 2026
Date

Burbank Unified School District
Special Education Department

REPORT TO THE BOARD

TO:	Members of the Board of Education
FROM:	Peter Knapik, Assistant Superintendent of Educational Services
PREPARED BY:	Jennifer Nicholson, Director of Special Education and Psychological Services
SUBMITTED BY:	Sandra Shearer, Administrative Secretary II
DATE:	May 7, 2026
SUBJECT:	Approval of Agreement for Professional Services Provided by Adams Silva and McNally LLP for Special Education

---

Background:

The Burbank Unified School District has the need from time to time for legal advice, support and direction in areas of specialty such as education law. Services may also include preparation for and representation in court.

Discussion/Issues:

Adams Silva & McNally LLP will provide legal services in regards to various special education matters.

Fiscal Impact:

Not to exceed $400,000.

Recommendation:

Peter Knapik, Assistant Superintendent of Educational Services, recommends that the Board of Education approve an agreement between Burbank Unified School District and Adams Silva & McNally LLP, to perform specific services, not to exceed $400,000 (01.0-65000.0-50010-21000-5820-7440000), effective July 1, 2026 through June 30, 2027 and that authority to sign the agreement be exercised pursuant to BUSD-AR 3314, as presented.



ADAMS SILVA & McNALLY LLP

LEGAL SERVICES AGREEMENT

THIS LEGAL SERVICES AGREEMENT is effective July 1, 2026, for the 2026-2027 school year, by and between the Burbank Unified School District ("Client") and the law firm of Adams Silva & McNally LLP ("Law Firm," together with Client, "Parties"). In consideration of the promises and the mutual agreements hereinafter contained, Client and Law Firm agree as follows:

1. Law Firm Services. Client hires Law Firm as its legal counsel with respect to matters the Client specifically refers to Law Firm. Law Firm shall provide legal services as reasonably required to represent Client in such matters, take reasonable steps to keep Client informed of significant developments, and respond to Client's inquiries regarding those matters. In addition to regular telephone, mail and other common business communication methods, Client authorizes Law Firm to use facsimile transmissions, cellular telephone calls and email, and other computer transmissions in communicating with Client. Unless otherwise instructed by Client, any such communications may include confidential information. Client understands that Law Firm cannot guarantee any particular result, including the costs and expenses of representation.

2. Billing Practices. Law Firm agrees to bill Client in units of one tenth (.1) of an hour at the billing rates established in the attached rate schedule. Client agrees to pay actual transportation and other costs of required out-of-town travel by Law Firm personnel. Other third-party services, such as investigators, process servers, court reporter fees, and witness fees (including expert witness' fees) shall be charged to Client at the actual costs paid to the service provider by Law Firm plus an additional processing fee of three (3) percent. Agreements for legal fees on special projects other than on an hourly basis may be made by mutual written agreement of the Parties.

3. Payment. Law Firm shall send Client a statement for fees and costs incurred every calendar month. Statements shall set forth the amount, rate and description of services provided. Client shall pay Law Firm's statements within thirty (30) days after receipt. Client agrees and is encouraged to communicate any billing concerns to Law Firm. An interest charge of one percent (1%) per month shall be assessed on balances that are more than thirty (30) days past due.

4. Termination and Withdrawal. Client may discharge Law Firm at any time by written notice. Unless otherwise agreed, and except as required by law, Law Firm will provide no further services hereunder after receipt of such notice. Law Firm may withdraw its services hereunder with Client's consent, upon good cause, or as allowed or required by law, upon ten (10) days written notice. Good cause includes any breach of this Agreement and/or any circumstance that would render Law Firm's continued representation of Client unlawful or in violation of any ethical rules. Upon discharge or withdrawal, Law Firm shall transition all outstanding legal work and services to others as Client shall direct.

5. Arbitration. The Parties agree all disputes that arise between Client and Law Firm shall be resolved through binding arbitration. In the case of a fee dispute, arbitration shall occur in accordance with the California State Bar rules for arbitration of disputes regarding attorneys' fees. The Parties waive their respective rights to a jury trial and an appeal. The terms of this provision shall survive the termination of this Agreement.

6. Severability. In the event any provision or portion of a provision in this Agreement is deemed unenforceable, the remainder of this Agreement and, if applicable, that provision, shall remain enforceable.

7. Client Responsibilities. Client agrees to cooperate with Law Firm, provide accurate information and documentation to Law Firm, and fully inform Law Firm of any developments that could affect Law Firm's representation of Client. Client agrees to attend all required appearances, such as hearings, and make its employees available to Law Firm as necessary for Law Firm to perform its services described under this Agreement.

8. Miscellaneous Provisions. In accordance with the requirements of the California Rules of Professional Conduct, Law Firm hereby provides notice to Client that it maintains errors and omissions insurance coverage applicable to the services to be rendered to Client by Law Firm pursuant to this Agreement. Upon the closure of an active matter, Client may request, and Law Firm agrees to provide following receipt of such request, the file related to that matter.

IN WITNESS WHEREOF, the parties have signed this Legal Services Agreement.

Burbank Unified School District	**Adams Silva & McNally LLP**
Peter Knapik Assistant Superintendent of Educational Services Burbank Unified School District	Kerrie McNally Partner Adams Silva & McNally LLP
Date: _____	Date: 04/07/2026



ADAMS SILVA & McNALLY LLP

PROFESSIONAL RATE SCHEDULE
(*Effective July 1, 2026, for the 2026-2027 School Year*)

1. HOURLY PROFESSIONAL RATES

Client agrees to pay Law Firm by the following standard hourly rate:

Partner	$355-415 per hour
Senior Counsel / Of Counsel	$340-415 per hour
Associate	$320-355 per hour
Law Clerk	$240-290 per hour
Paralegal	$230-275 per hour

Time is billed in increments in units of one tenth (.1) of an hour, rounded up to the nearest increment. Law Firm shall charge its hourly rate for round-trip travel time from our office to the destination required by the Client. Computerized legal research is billed at cost. Additionally, actual travel expenses as described below will be billed.

2. COSTS AND EXPENSES

In-Office copying	$0.15 per page
Incoming/Outgoing Facsimile	No Charge
Postage	Actual Usage
Mileage	IRS Standard Rate

Other services, such as third-party consultants, investigators, process servers, court reporter fees, transcription costs, and witness fees (including expert witness' fees) shall be charged to Client at the actual costs paid to the service provider by Law Firm plus an additional three (3) percent processing fee.

Other costs, such as messenger, airfare, and lodging, shall be charged on an actual and necessary basis with prior approval from Client.

Burbank Unified School District
Special Education Department

REPORT TO THE BOARD

TO:	Members of the Board of Education
FROM:	Peter Knapik, Assistant Superintendent of Educational Services
PREPARED BY:	Jennifer Nicholson, Director of Special Education and Psychological Services
SUBMITTED BY:	Sandra Shearer, Administrative Secretary II
DATE:	May 7, 2026
SUBJECT:	Approval of Agreement for Professional Services Provided by Gary D Stromberg & Associated, LLC for Special Education

---

Background:

The Board of Education is being asked to approve an agreement for professional services to hire an outside Certified Occupational Therapist Assistant (COTA) (as a consultant) to provide support and assessments to Special Education Students. The consultant will assist with assessments, writing the assessment reports and attending IEP's of Special Education Students.

Discussion/Issues:

The District is obligated to provide assessments and implement Individualized Education Plans (IEP's) for students who attend our schools. The District does not have current staff available to support caseload overage and is, therefore, contracting with a consultant to remain in compliance with IEP and Ed Code regulations.

Fiscal Impact:

Not to exceed $114,975.

Recommendation:

Peter Knapik, Assistant Superintendent of Educational Services, recommends that the Board of Education approve an agreement between Burbank Unified School District and Gary D Stromberg & Associates, LLC, to provide a Certified Occupational Therapist Assistant (COTA), not to exceed $114,975 (01.0-65000.0-57602-11901-5850-7440000), effective July 1, 2026 through June 30, 2027, and that authority to sign the agreement be exercised pursuant to BUSD-AR 3314, as presented.

Burbank Unified School District
1900 West Olive Avenue, Burbank, 91506
Tel: (818) 729-4473
Fax: (818) 729-4573
www.burbankusd.org

TERMS OF AGREEMENT

This Agreement, made and entered into this 1st day of May 2026 by and between the **Burbank Unified School District**, hereinafter referred to as "District", and Gary D Stromberg & Associates, LLC hereinafter referred to as "Provider."

Payee's Name: Gary D Stromberg & Associates, LLC Daytime Phone Number: 716-982-6556

Mailing Address: 110 Gleason Street, Unit 303 Delray Beach, FL 33483

Email Address: louis@strombergassociates.com

Sponsoring Administrator: Peter Knapik (Print Name) Assistant Superintendent (Title) (Signature) Special Education (Location)

Board Approval: 05/07/2026 Account Code: 01.0-65000.0-57602-11900-5850-7440000

The District is authorized pursuant to Education Code section 35160 and Government Code Section 53060 to contract for the services of Providers.

WHEREAS, the Provider is especially trained, experienced and competent to provide such services;

WHEREAS, in consideration of the mutual promises of the parties, hereto, the District hereby retains the Provider upon the terms and conditions hereinafter set forth, and the Provider hereby accepts said retention and agrees to perform the services hereinafter mentioned, upon said terms and conditions;

The parties mutually agree as follows:

1. The Provider agrees to perform the following services for the District, at a rate of $73 per hour for a total not to exceed **$114,975**

2. The term of the Agreement shall be the period commencing on: 07/01/2026 and terminating on: 06/30/2027.

3. Payment Terms: Net 45 Days

4. District desires to enter into an Agreement in which Gary D Stromberg & Associates, LLC will provide a COTA for support and assessments for special education students. Should the district find a full time employee for the COTA position, the district will give Gary D Stromberg & Associates, LLC two weeks notice of termination of this contract.

   2025/2026 ESY - July 1, 2026 - July 16, 2026. 10 days X 4.5 hours per day = 45 hours X $73 per hour = $3,285.

   2026/2027 Regular School Year - August 13, 2026 - May 27, 2027. 180 days X 8 hours per day = 1,440 hours X $73 per hour = $105,120.

   2026/2027 ESY - Approximately 20 days in June 2027. 20 days X 4.5 hours per day = 90 hours X $73 per hour = $6,570.

5. The Provider shall provide a clear and concise invoice noting the time spent in providing the services and preparing the products required by this Agreement. Provider will be paid at the conclusion of this contract unless otherwise stated in the payment terms above.

6. It is expressly understood and agreed to by both parties hereto that the Provider, while engaged in carrying out and complying with any of the terms and conditions of this contract, is an independent contractor and is not an officer, agent or employee of the aforesaid District.

7. Provider agrees to defend, indemnify, save, and hold harmless the District, its governing body, the individual members thereof, and all officers, agents and employees of the District from all loss, cost, and expense arising out of any liability or claim of liability for injury, damage, or loss sustained or claimed to have been sustained arising out of, or occurring as a result of Provider's performance or failure to perform services under this Agreement.

8. This agreement may be terminated at any time based upon the mutual agreement of the parties hereto. This agreement may also be terminated immediately by the District should the Provider breach this agreement or fail to perform the required services in a satisfactory manner.

9. Provider agrees to pay all Federal, State and Local taxes, and fees that are owed as a result of payments made to Provider pursuant to this agreement. Provider agrees to indemnify and hold harmless the District from any and all costs, loss, or liability whatsoever arising from or caused by any challenge to the payments made to Provider pursuant to this agreement, including but not limited to any liabilities or penalties assessed or levied by any and all local, state, or federal taxing authorities against the District.

10. Provider agrees to ensure that they do not exceed the applicable earnings limitation under CALPERS or STRS and agrees to be solely responsible for any actions taken by CALPERS or STRS as a result of exceeding the applicable earnings limitation.

11. District and Provider will communicate and send in writing all information received by the District regarding any work-related injury to Personnel within twenty-four hours of the injury.

12. Communicate within twenty-four hours to Gary D Stromberg & Associates, LLC the details of any incident, which may result in a complaint against any Personnel regarding professional services given by the Personnel.

13. The District agrees to indemnify, defend and hold harmless Gary D Stromberg & Associates, LLC from any and all negligence and all liabilities, claims, losses, costs, damages and expenses resulting or arising from or connected with the services rendered by the District, its agents, independent contractors, employees or servants pursuant to this contract.

14. This Agreement shall constitute the entire Agreement between the parties and any prior understanding or representation of any kind preceding the date of this Agreement shall not be binding upon either party except to the extent incorporated in this Agreement.

15. It is mutually agreed that both parties shall not discriminate against any individual in the performance of their obligations under this Agreement, on the basis of race, color, religion, national origin, sex, age or disability. Both parties further certify compliance with the applicable provisions of the Civil Rights Act of 1964, the Rehabilitation Act of 1973, and the Americans with Disabilities Act and State anti-discrimination laws.

INDEMNIFICATION

Gary D Stromberg & Associates, LLC shall save and hold the District harmless from and against and shall indemnify District for any liability, loss, cost, expense or damage whatsoever caused by reason of any injury sustained by any person or to property by reason of any act, neglect, default or omission of Gary D Stromberg & Associates, LLC or any of its agents, subcontractors, employees or other representatives. If District is sued in any court for damages by reason of any of the acts of Gary D Stromberg & Associates, LLC, its agents, subcontractors, employees or other representatives referred to in this Agreement, Gary D Stromberg & Associates, LLC shall defend said action (or cause same to be defended) as its own expense and shall pay any discharge and judgment that may be rendered in any such action. If Gary D Stromberg & Associates, LLC fails or neglects to so defend said action, District may defend the same and any expenses, including reasonable Attorney fees, which District may pay or incur in defending said action and the amount of any judgment which District may be required to pay shall be promptly reimbursed by Gary D Stromberg & Associates, LLC demand.

District shall save and hold Gary D Stromberg & Associates, LLC, harmless from and against and shall indemnify Gary D Stromberg & Associates, LLC for any liability, loss, cost, expense or damage whatsoever caused by reason of any injury sustained by any person or to property by reason of any act, neglect, default or omission of District, or any of its

agents, subcontractors, employees or other representatives. If Gary D Stromberg & Associates, LLC is sued in any court for damages by reason of any of the acts of the District, its agents, subcontractors, employees or other representatives referred to in this Agreement, District shall defend said action (or cause same to be defended) as its own expense and shall pay any discharge and judgment that may be rendered in any such action. If District fails or neglects to so defend said action, Gary D Stromberg & Associates, LLC may defend the same and any expenses, including reasonable attorney's fees, which Gary D Stromberg & Associates, LLC may pay or incur in defending said action and the amount of any judgment which Gary D Stromberg & Associates, LLC may be required to pay shall be promptly reimbursed by District upon demand.

ARBITRATION

Any controversy or claim arising out of or relating to this Agreement, or the performance or breach thereof, shall be settled by means of binding arbitration in accordance with the rules of the American Arbitration Association, at Los Angeles, California.

If either party to this Agreement institutes any legal action or proceeding against the other party to the Agreement arising out of the Agreement, the prevailing party shall be entitled to recover its reasonable attorney's fees and costs from the non-prevailing party.

ACKNOWLEDGED AND AGREED TO

District:

Burbank Unified School District
District/Company Name

Jennifer Nicholson
Print Representative Name

Director of Special Education
Title

Signature

Date

ACKNOWLEDGED AND AGREED TO

Provider:

Gary D Stromberg & Associates, LLC
Provider/Company

Print Representative Name

Title

Signature

Date

Burbank Unified School District
Special Education Department

REPORT TO THE BOARD

TO:	Members of the Board of Education
FROM:	Peter Knapik, Assistant Superintendent of Educational Services
PREPARED BY:	Jennifer Nicholson, Director of Special Education and Psychological Services
SUBMITTED BY:	Sandra Shearer, Administrative Secretary II
DATE:	May 7, 2026
SUBJECT:	Approval of Final Settlement Agreement (Special Education)

Background:

The Board of Education is being asked to approve the Final Settlement Agreement for Special Education student 960025725 pursuant to California Education Code (Sections 17604 and 35163), as presented in the Confidential Exhibit.

Discussion/Issues:

In an effort to resolve the disagreement between the District and the parent of Special Education student 960025725 concerning services and/or school placement, a formal settlement agreement was offered on March 24, 2026 to the parents. To avoid additional time and expense concerning this matter, the District settled the dispute with the student's parents, without admitting any liability.

Fiscal Impact:

Not to exceed $29,000

Recommendation:

Peter Knapik, Assistant Superintendent of Educational Services, recommends that the Board of Education approve Final Settlement Agreement for Special Education student 960025725, total not to exceed $29,000, (01.0-65000.0-50010-36000-5813-7440000), August 13, 2025 through July 31, 2026 and that authority to sign the agreement be exercised pursuant to BUSD-AR 3314, as presented.

Burbank Unified School District
Special Education Department

REPORT TO THE BOARD

TO:	Members of the Board of Education
FROM:	Peter Knapik, Assistant Superintendent of Educational Services
PREPARED BY:	Jennifer Nicholson, Director of Special Education and Psychological Services
SUBMITTED BY:	Sandra Shearer, Administrative Secretary II
DATE:	May 7, 2026
SUBJECT:	Approval of Final Settlement Agreement (Special Education)

Background:

The Board of Education is being asked to approve the Final Settlement Agreement for Special Education student 960046052 pursuant to California Education Code (Sections 17604 and 35163), as presented in the Confidential Exhibit.

Discussion/Issues:

In an effort to resolve the disagreement between the District and the parent of Special Education student 960046052 concerning services and/or school placement, a formal settlement agreement was offered on April 3, 2026 to the parents. To avoid additional time and expense concerning this matter, the District settled the dispute with the student's parents, without admitting any liability.

Fiscal Impact:

Not to exceed $4,000

Recommendation:

Peter Knapik, Assistant Superintendent of Educational Services, recommends that the Board of Education approve Final Settlement Agreement for Special Education student 960046052, total not to exceed $4,000, (01.0-65000.0-50010-36000-5813-7440000), April 8, 2026 through May 27, 2027 and that authority to sign the agreement be exercised pursuant to BUSD-AR 3314, as presented.

Burbank Unified School District
Administrative Services

REPORT TO THE BOARD

TO:	Members of the Board of Education
FROM:	Administrative Service Department
PREPARED BY:	Valezka Emes, Director of Facilities
SUBMITTED BY:	Megan Burkhart, Facilities Operations Construction Technician
DATE:	May 7, 2026
SUBJECT:	Approval of Award of Contract, Playpower LT Farmington Inc., Furnish and Install Retrofit of TK Playground Equipment, Ralph Waldo Emerson, Walt Disney, Bret Harte, Thomas Jefferson, William McKinley, Providencia, George Washington, Theodore Roosevelt Elementary Schools (Growth Funds)

Background:
The existing playground equipment at the following sites are currently rated for ages 5-12: Ralph Waldo Emerson, Walt Disney, Bret Harte, Thomas Jefferson, William McKinley, Providencia, George Washington, and Theodore Roosevelt Elementary. Due to safety concerns and to accommodate for younger and smaller children, the District is seeking to retrofit the playgrounds to be compliant for ages 2-5.

Discussion/Issues:
To accommodate the incoming TK program, safe and appropriate playground equipment is required to be accessible for ages 2-5. The new designs will increase the number of play activities and will add to the play experience for TK students who will be able to enjoy these new structures.

Fiscal Impact:

Ralph Waldo Emerson	$9,314.04
Walt Disney	$17,416.58
Bret Harte	$29,976.06
Thomas Jefferson	$31,824.59
William McKinley	$3,703.63
Providencia	$20,531.21
George Washington	$8,825.31
Theodore Roosevelt	$30,723.59

Grand total $152,315.01 (Growth Funds)

Recommendation:
The Administrative Services Department recommends that the Board of Education approve the contract between Burbank Unified School District and PlayPower LT Farmington Inc., for the Furnish and Install Retrofit of the TK Playground Equipment at the schools below, effective May 8, 2026 through May 7, 2027, not to exceed $152,315.01, Growth Funds, and that authority to sign the agreement be exercised pursuant to BUSD-AR 3314, as presented, as follows:

Ralph Waldo Emerson, $9,314.04	(25.0-00000-91006-85000-6170-2030000)
Walt Disney, $17,416.58	(25.0-00000-91006-85000-6170-2010000)
Bret Harte, $29,976.06	(25.0-00000-91006-85000-6170-2050000)
Thomas Jefferson, $31,824.59	(25.0-00000-91006-85000-6170-2060000)
William McKinley $3,703.63	(25.0-00000-91006-85000-6170-2090000)
Providencia, $20,531.21	(25.0-00000-91006-85000-6170-2130000)
George Washington, $8,825.31	(25.0-00000-91006-85000-6170-2160000)
Theodore Roosevelt, $30,723.59	(25.0-00000-91006-85000-6170-2140000)

Make Purchase Order/Check payable to:PlayPower LT Farmington, Inc.
c/o Pacific Park and Play 714 846-4885 fax 714 846-3485
P.O. Box 734155, Dallas, TX 75373-4155 email: pacificdzn@aol.com

QUOTATION

PlayPower LT Farmington, Inc.

Contact PlayPower LT Farmington at 800-325-8828

Sales Person: GUY DONAHOE Pacific Park and Play

SITE LOCATION

Quote # 2140022500 Date 4/24/2026

Version 1

BURBANK USD - DISNEY TRANSITIONAL KINDERGARTEN

BURBANK, CA 915

Site Phone:

Site Fax:

attn: MALIHE SHOKOUHI

RE:: BURBANK USD - DISNEY TRANSITIONAL KINDERGAR

BILL TO

Customer PO#

BURBANK UNIFIED SCHOOL DISTRICT
1900 OLIVE STREET

BURBANK, CA 91505

ATTN: MALIHE SHOKOUHI

Phone: (213) 718-0462 Ext.:

Fax:

QTY:	ITEM #	Description	Unit Price	Extended Price
1	LTCPS-1-05100	PLAY BUILDER BROWN 8" DECK-TO-DECK PANEL. INCLUDES HARDWARE.	$207.7600	$207.76
1	LTCPS-2-111492	IDENTIFICATION LABEL STAMPED WITH RIVETS.	$5.5272	$5.53
1	LTCPS-2-202613	PLAY BUILDER 106" POST WITH CAP.	$230.3000	$230.30
1	LTCPS-2-203926	MINI SENSORY FIDGET INSERT FOR POST PLAYER.	$730.1000	$730.10
1	LTCPS-2-203931	PLAY BUILDER REACH PANEL. INCLUDES HARDWARE BAG.	$549.7800	$549.78
1	LTCPS-2-54626	PLAY BUILDER PLASTIC TIC-TAC-TOE PANEL WITH ARCH TOP. INCLUDES HARDWARE.	$1,747.3400	$1,747.34
1	LTCPS-2-54655	PLAY BUILDER VILLAGE PICKET FENCE PANEL. INCLUDES HARDWARE BAG.	$523.3200	$523.32
1	LTCPS-2-61532	PLAY BUILDER 16" INTER-DECK STEP WITH SAFETY LOOPS AND HARDWARE.	$827.1200	$827.12

PLEASE NOTE: GRAND TOTAL COST IS LISTED ON PAGE TWO

1	LTCPS-2-63630	PLAY BUILDER "S" CRAWL TUNNEL WITH FLAT TOP, BELOW DECK. INCLUDES HARDWARE BAG.	$3,073.2801	$3,073.28
1	LTCPS-925601	2 - 5 AGE LABEL.	$7.9772	$7.98
1	LTCPS-HW7704-1	HARDWARE BAG FOR CLAMP ELIMINATION.	$50.9600	$50.96
1	SPECTR-DISNEY	SPECTRAPOUR POUR IN PLACE AROMATIC RUBBER SURFACING. PATCH & REPAIR OF 15 SQ/FT, 3 1/2" THICK, 100% STANDARD COLOR. NO GRAPHICS OR COLOR PATTERNS INCLUDED. INCLUDES MATERIAL, FREIGHT, INSTALLATION & SALES TAX.	$4,117.0000	$4,117.00

ENTER SHIP TO ADDRESS IF DIFFERENT FROM SITE ADDRESS.

SubTotal	$12,070.46
Install	$3,340.00
PBO Amount	
PBO Freight	
Freight	$1,171.00
TAX RATE	10.50%
TAX	$835.11
TOTAL	$17,416.58

Credit Report Required: No

Installer:	Installation Quote:
PSI	$3,340.00

Special Instructions: Terms: Net 30 days

PURCHASE ORDER INFORMATION IS ABOVE ON THE FIRST PAGE OF THE QUOTATION.

DISCOUNT IS PER SOURCEWELL / NJPA CONTRACT #101625-PLP. SOURCEWELL MEMBER #11938.

REMOVAL, DISPOSAL & INSTALLATION ARE INCLUDED IN TOTAL.

PLEASE BE ADVISED THAT IF ANY PARTS NEED TO BE RETURNED, YOU WILL NEED TO PAY FREIGHT BOTH WAYS AND THE RESTOCKING FEE.

CLIENT IS RESPONSIBLE FOR RECEIVING / OFFLOADING EQUIPMENT. CLIENT IS RESPONSIBLE FOR CHECKING FOR AND NOTING SHIPPING DAMAGE, IF ANY, WHEN RECEIVING EQUIPMENT AT DELIVERY TIME.

REGARDING RUBBER SURFACING:
IN THE EVENT THAT A CHANGE IN COLOR, COLOR PERCENTAGE, THICKNESS OR SQUARE FOOTAGE IS REQUESTED, A REVISED PROPOSAL AND PURCHASE ORDER WILL BE REQUIRED BEFORE INSTALLATION CAN BEGIN.

STANDARD INSURANCE DOES NOT INCLUDE PRIMARY WORDING OR SUBROGATION.

THANK YOU!

This Quote shall not become a binding contract until signed and delivered by both Customer and PlayPower LT Farmington Inc ("PPLT"). Sales Representative is not authorized to sign this Quote on behalf of PPLT or Customer, and signed Quotes cannot be accepted from Sales Rep.To Submit this offer, please sign below forward a complete signed copy of this Quote directly to "PPLT Sales Administrator" via fax (714) 846-3485 or email pacificdzn@aol.com. Upon acceptance, PPLT will return a fully-signed copy of the Quote to Customer with copy to Sales Representative via fax or email. THIS QUOTE IS LIMITED TO AND GOVERNED BY THE TERMS CONTAINED HEREIN. PPLT objects to any other terms proposed by Customer, in writing or otherwise, as material alterations, all such proposed terms shall be void. Customer authorizes PPLT to ship the Equipment and agrees to pay PPLTthe total amount specified. Shipping terms are FOB the place of shipment via common carrier designated by PPLT. Payment terms are Net-30 days from invoice date with approved credit all charges are due and payable in full at P.O. Box 734155, Dallas, TX 75373-4155, unless notified otherwise by PPLT in writing.Customer agrees to pay all additional service charges for pastdue invoices.Customer must provide proper tax exemption certificates to PPLT, shall promptly pay discharge all otherwise applicable taxes, license fees, levies other impositions on the Equipment at its own expense. Equipment quote valid for 15 days, freight/labor prices subject to change. Install/labor quoted is Not at prevailing wages rates unless specifically noted.....

CUSTOMER HEREBY SUBMITS ITS OFFER TO PURCHASE THE EQUIPMENT ACCORDING TO THE TERMS STATED IN THIS QUOTE AND SUBJECT TO FINAL APPROVAL BY PPLT.

_____ _____ _____

Submitted By (Signature) Printed Name and Title Date

The foregoing quote and offer are hereby approved and accepted by PPLT.

By: _____ Date _____

_____ Quote # 2140022500

PLEASE NOTE: GRAND TOTAL COST IS LISTED ON PAGE TWO

ADDITIONAL TERMS AND CONDITIONS OF SALE

1. Use and Maintenance. Customer agrees to regularly inspect and maintain the Equipment, and to provide, inspect and maintain appropriate safety surfacing under around the Equipment, in accordance with PPLT's product literature and the most current Consumer Product Safety Commission Handbook for Public Playground Safety.

2. Default, Remedies Delinquency Charges. Customer's failure to pay any invoice when due, or its failure to otherwise comply with the terms of this Quote, shall constitute a default under all unsatisfied invoices ("Event of Default"). Upon an Event of Default, PPLT shall have all remedies available to it at law or equity, including, without limitation, all remedies afforded a secured creditor under the Uniform Commercial Code. Customer agrees to assist and cooperate with PPLT to accomplish its filing and enforcement of mechanic's or other liens with respect to the Equipment or its location or its repossession of the Equipment and Customer expressly waives all rights to possess the Equipment after an Event of Default. All remedies are cumulative and not alternative, and no exercise by PPLT of a remedy will prohibit or waive the exercise of any other remedy.Customer shall pay all reasonable attorneys' fees plus any costs of collection incurred by PPLT in enforcing its rights hereunder. Subject to any limitations under law, Customer shall pay to PPLT as liquidated damages, and not as a penalty, an amount equal to 1.5% per month of any payment .that is delinquent in such month and is not received by PPLT within ten (10) days after the date on which due...

3. Limitation of Warranty/ Indemnity. PPLT MAKES NO EQUIPMENT WARRANTIES EXCEPT FOR THOSE STANDARD WARRANTIES ISSUED WITH THE EQUIPMENT, WHICH ARE INCORPORATED HEREIN BY THIS REFERENCE. PPLT SPECIFICALLY DISCLAIMS ANY IMPLIED WARRANTY OF MERCHANTABILITY OR FITNESS FOR A PARTICULAR PURPOSE AND ANY LIABILITY FOR INCIDENTAL OR CONSEQUENTIAL DAMAGES. CUSTOMER AGREES TO DEFEND, INDEMNIFY AND SAVE PPLT HARMLESS FROM ALL CLAIMS OF ANY KIND FOR DAMAGES OF ANY KIND ARISING OUT OF CUSTOMER'S ALTERATION OF THE EQUIPMENT, ITS FAILURE TO MAINTAIN THE EQUIPMENT, ITS FAILURE TO PROPERLY SUPERVISE EQUIPMENT USE, OR ITS FAILURE TO PROVIDE AND MAINTAIN APPROPRIATE TYPES AND DEPTHS OF SAFETY SURFACING BENEATH AND AROUND THE EQUIPMENT IN ACCORDANCE WITH PPLT'S INSTALLATION AND OWNER'S MANUALS AND THE MOST CURRENT CONSUMER PRODUCT SAFETY COMMISSION HANDBOOK FOR PUBLIC PLAYGROUND SAFETY.

4. Restrictions. Until all amounts due hereunder are paid in full, Customer shall not: (i) permit the Equipment to be levied upon or attached under any legal process; (ii) transfer title to the Equipment or any of Customer's rights therein; or (iii) remove or permit the removal of the Equipment to any location not specified in this Quote.

5. Purchase Money Security Interest. Customer hereby grants, pledges and assigns to PPLT, and PPLT hereby reserves a purchase money security interest in, the Equipment in order to secure the payment and performance in full of all of Customer's obligations hereunder. Customer agrees that PPLT may file one or more financing statements, in order to allow it to perfect, acquire and maintain a superior security interest in the Equipment.

6. Choice of Law and Jurisdiction. All agreements between Customer and PPLT shall be interpreted, and the parties' obligations shall be governed, by the laws of the State of Missouri without reference to its choice of law provisions. Customer hereby consents to the personal jurisdiction of the state and federal courts located in the city and county of St. Louis, Missouri.

7. Title; Risk of Loss; Insurance. PPLT Retains full title to all Equipment until full payment is received by PPLT. Customer assumes all risk of loss or destruction of or damage to the Equipment by reason of theft, fire, water, or any other cause, occurrence of any such casualty shall not relieve the Customer from its obligations hereunder and under any invoices. Until all amounts due hereunder are paid in full, Customer shall insure the Equipment against all such losses and casualties.

8. Waiver; Invalidity.PPLT may waive a default hereunder, or under any invoice or other agreement between Customer PPLT, or cure such a default at Customer's expense, but shall have no obligation to do either. No waiver shall be deemed to have taken place unless it is in writing, signed by PPLT. Any one waiver shall not constitute a waiver of other defaults or the same kind of default at another time, or a forfeiture of any rights provided to PPLT hereunder or under any invoice.The invalidity of any portion of this Quote shall not affect the force and effect of the remaining valid portions hereof.

9. Entire Agreement; Amendment; Binding Nature.This fully-executed Quote, as supplemented by Change Orders invoices containing exact amounts of estimates provided herein, constitutes the complete and exclusive agreement between the parties. A Change Order is a written instrument signed by the Customer and PPLT stating their agreement as to any amendment in the terms of this Quote. Customer acknowledges that Change Orders may result in delays and additional costs. The parties agree that all Change Orders shall include appropriate adjustments in price and time frames relating to any requested amendments Upon full execution, this Quote shall be binding upon and inure to the benefit of the parties and their successors and assigns..

10. Counterparts; Electronic Transmission. This Quote, any invoice, and any other agreement between the parties, may be executed in counterparts, each of which shall constitute an original.The facsimile or other electronic transmission of any signed original document,retransmission of any signed facsimile or other electronic transmission, shall be the same as the transmission of an original. At the request of either party, the parties will confirm facsimile or other electronically transmitted signatures by signing an original document..

GENERAL NOTES

AGE GROUP

☑ 2-5YRS ☐ 5-12YRS ☐ 2-12YRS ☐ 13YRS

1. THE AMERICANS WITH DISABILITIES ACT (ADA) MAY REQUIRE THAT YOU MAKE YOUR PARK AND/OR PLAYGROUND ACCESSIBLE WHEN VIEWED IN ITS ENTIRETY. PLEASE CONSULT YOUR LEGAL COUNSEL TO DETERMINE IF THE ADA APPLIES TO YOU.
2. FOR PLAYGROUND EQUIPMENT TO BE CONSIDERED ACCESSIBLE ACCESSIBLE SURFACING MUST BE UTILIZED IN APPLICABLE AREAS.
3. ALTHOUGH A PARTICULAR PLAYGROUND DESIGN MY NOT MEET THE PROPOSED ACCESS BOARD REGULATIONS IN REGARDS TO THE APPROPRIATE NUMBER OF GROUND LEVEL EVENTS THE ACTUAL PLAYGROUND MAY BE IN COMPLIANCE WHEN CONSIDERING EXISTING PLAY COMPONENTS.
4. ALL DECK HEIGHTS ARE MEASURED FROM TOP OF GROUND COVER.
5. FALL ABSORBING GROUND COVER IS REQUIRED UNDER AND AROUND ALL PLAY EQUIPMENT.
6. THE MINIMUM RECOMMENDED FALL ZONE AROUND THE ENTIRE PLAYSTRUCTURE IS SHOWN. THIS ZONE IS TO BE FREE OF ALL TRIPPING OR COLLISION HAZARDS (I.E. ROOTS ROCKS BORDER MATERIAL ETC.).
7. ALL POST LENGTHS ARE IDENTIFIED BY TEXT SHOWING THE POST LENGTHS I.E. 96 REPRESENTS A 96 INCH POST.
8. NOT ALL EQUIPMENT MAY BE APPROPRIATE FOR ALL CHILDREN. SUPERVISION IS REQUIRED.

AGE GROUP:	2-5_ASTM			
ELEVATED PLAY ACTIVITIES - TOTAL:	16			
ELEVATED PLAY ACTIVITIES ACCESIBLE BY TRANSFER:	16	REQ'D	8	
ELEVATED PLAY ACTIVITIES ACCESIBLE BY RAMP:	0	REQ'D	0	
GROUND LEVEL ACTIVITY TYPE:	5	REQ'D	3	
GROUND LEVEL QUANTITY:	8	REQ'D	5	

1) Remove Sliding Pole, Install New Tic-Tac-Toe Panel
2) Remove 16" deck, replace with picket fence
3) New "S" Crawl Tunnel, Remove Challenge Ladder
4) Move displaced turn bar to end with new post
5) New reach sensory fidget panel where challenge ladder ended
6) New Interdeck Step between 48" & 64
7) new deck to deck between 56" & 64"

Colors: Brown Vinyl, Blue Posts, Tropical Yellow Accents, Blue S Tunnel, Red/Yellow Reach Panel, Tropical Yellow Village Panels

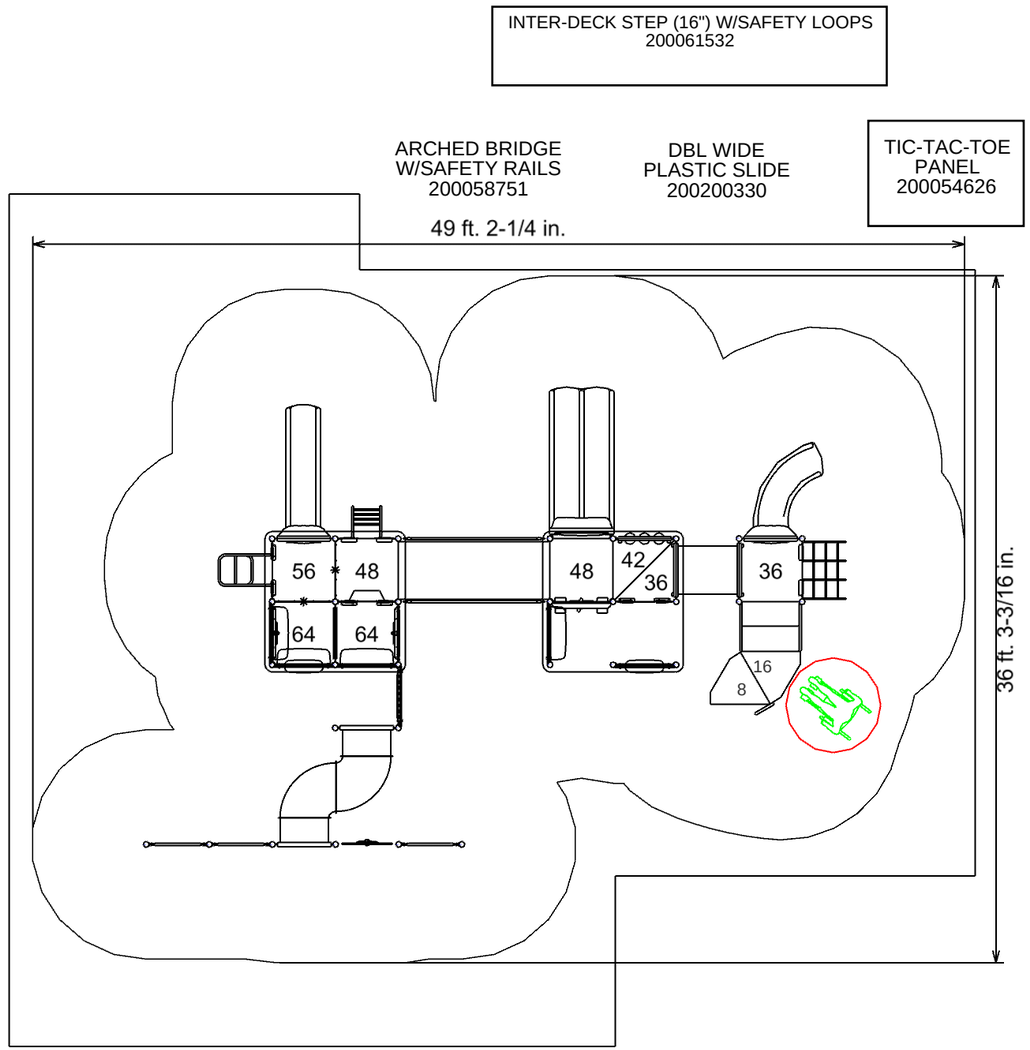

INTER-DECK STEP (16") W/SAFETY LOOPS
200061532

ARCHED BRIDGE W/SAFETY RAILS
200058751

DBL WIDE PLASTIC SLIDE
200200330

TIC-TAC-TOE PANEL
200054626

VILLAGE SEAT PANEL
200054654

SGL PLASTIC WAVE SLIDE
200064813

LOOP CLIMBER
200061706

SAFETY RAIL W/WHEEL
200054616

VILLAGE COUNTER PANEL
200054653

VILLAGE SEAT PANEL
200054654

S CRAWL TUNNEL
200063630

VILLAGE PICKET FENCE PANEL
200054655

TURNING BAR
200060513

TURNING BAR
200060513

MINI SENSORY FIDGET INSERT
200203926

REACH PANEL MINI INSERT F/PB
200203931

TURNING BAR
200060513

VILLAGE SEAT PANEL
200054654

RUNG LADDER
200054578

VILLAGE SEAT PANEL
200054654

ELBOW SLIDE
200064815

CHAIN NET CLIMBER
200084311

TRANSFER STATION
200200432

CRAWL TUNNEL
200063639

VILLAGE COUNTER PANEL
200054653

QUAD ROOF
200060686

QUAD ROOF
200060686

SAFETY RAIL W/WHEEL
200054616

SEVEN STATION PLAY FACTORY
200065770

PROJECT:

THOUSAND OAKS, CA

LTCPS REP:

Tracy Grabow
GUY DONAHOE
Enter Phone No.

GROUND SPACE:	37'-6" x 24'-6"
PROTECTIVE AREA:	49'-6" x 36'-6"

DRAWN BY: Tracy Grabow
DATE: 04/20/2026
PROJECT: 26007492

LTCPS - FARMINGTON
878 EAST HIGHWAY 60
MONETT MO 65708
VOICE: 1-800-325-8828
FAX: 417-354-2273

PLAYGROUND LAYOUT COMPLIANCE:

☑ THIS PLAYGROUND DESIGN MEETS THE FINAL ACCESS BOARD REGULATION.

Make Purchase Order/Check payable to:PlayPower LT Farmington, Inc.
c/o Pacific Park and Play 714 846-4885 fax 714 846-3485
P.O. Box 734155, Dallas, TX 75373-4155 email: pacificdzn@aol.com

QUOTATION

PlayPower LT Farmington, Inc.

Contact PlayPower LT Farmington at 800-325-8828

Sales Person: GUY DONAHOE Pacific Park and Play

SITE LOCATION

Quote # 2140022501 Date 4/24/2026

Version 1

BURBANK USD - EMERSON TRANSITIONAL KINDERGARTEN

BURBANK, CA 915

Site Phone:

Site Fax:

attn: MALIHE SHOKOUHI

RE:: BURBANK USD - EMERSON TRANSITIONAL KINDERG

BILL TO

Customer PO#

BURBANK UNIFIED SCHOOL DISTRICT
1900 OLIVE STREET

BURBANK, CA 91505
ATTN: MALIHE SHOKOUHI
Phone: (213) 718-0462 Ext.:
Fax:

QTY:	ITEM #	Description	Unit Price	Extended Price
1	LTCPS-2-111492	IDENTIFICATION LABEL STAMPED WITH RIVETS.	$5.5272	$5.53
1	LTCPS-2-201022	PLAY BUILDER RUNG LADDER FOR 40" DECK, WITH SAFETY LOOPS AND HARDWARE.	$818.3000	$818.30
1	LTCPS-2-202438	PLAY BUILDER VERTICAL POD CLIMBER FOR 48" DECK HEIGHT. INCLUDES ENCLOSURE, PODS, CAPS & HARDWARE.	$2,044.2800	$2,044.28
1	LTCPS-2-202879	PLAY BUILDER BUMPY CLIMBER FOR 40" DECK. INCLUDES LOOPS, ANCHOR TUBE, CAPS, TAB RAILS, GASKETS & HARDWARE BAG.	$2,532.3200	$2,532.32
1	LTCPS-2-203578	PLAY BUILDER STEERING WHEEL , PLASTIC, POST MOUNT. INCLUDES HARDWARE.	$330.2600	$330.26
2	LTCPS-925601	2 - 5 AGE LABEL.	$7.9772	$15.95

PLEASE NOTE: GRAND TOTAL COST IS LISTED ON PAGE TWO

ENTER SHIP TO ADDRESS IF DIFFERENT FROM SITE ADDRESS.

SubTotal	$5,746.64
Install	$2,093.00
PBO Amount	
PBO Freight	
Freight	$871.00
TAX RATE	10.50%
TAX	$603.40
TOTAL	$9,314.04

Credit Report Required: No

Installer:	Installation Quote:
PSI	$2,093.00

Special Instructions: Terms: Net 30 days

PURCHASE ORDER INFORMATION IS ABOVE ON THE FIRST PAGE OF THE QUOTATION.

DISCOUNT IS PER SOURCEWELL / NJPA CONTRACT #101625-PLP. SOURCEWELL MEMBER #11938.

REMOVAL, DISPOSAL & INSTALLATION ARE INCLUDED IN TOTAL.

PLEASE BE ADVISED THAT IF ANY PARTS NEED TO BE RETURNED, YOU WILL NEED TO PAY FREIGHT BOTH WAYS AND THE RESTOCKING FEE.

CLIENT IS RESPONSIBLE FOR RECEIVING / OFFLOADING EQUIPMENT. CLIENT IS RESPONSIBLE FOR CHECKING FOR AND NOTING SHIPPING DAMAGE, IF ANY, WHEN RECEIVING EQUIPMENT AT DELIVERY TIME.

THANK YOU!

This Quote shall not become a binding contract until signed and delivered by both Customer and PlayPower LT Farmington Inc ("PPLT"). Sales Representative is not authorized to sign this Quote on behalf of PPLT or Customer, and signed Quotes cannot be accepted from Sales Rep.To Submit this offer, please sign below forward a complete signed copy of this Quote directly to "PPLT Sales Administrator" via fax (714) 846-3485 or email pacificdzn@aol.com. Upon acceptance, PPLT will return a fully-signed copy of the Quote to Customer with copy to Sales Representative via fax or email. THIS QUOTE IS LIMITED TO AND GOVERNED BY THE TERMS CONTAINED HEREIN. PPLT objects to any other terms proposed by Customer, in writing or otherwise, as material alterations, all such proposed terms shall be void. Customer authorizes PPLT to ship the Equipment and agrees to pay PPLTthe total amount specified. Shipping terms are FOB the place of shipment via common carrier designated by PPLT. Payment terms are Net-30 days from invoice date with approved credit all charges are due and payable in full at P.O. Box 734155, Dallas, TX 75373-4155, unless notified otherwise by PPLT in writing.Customer agrees to pay all additional service charges for pastdue invoices.Customer must provide proper tax exemption certificates to PPLT, shall promptly pay discharge all otherwise applicable taxes, license fees, levies other impositions on the Equipment at its own expense. Equipment quote valid for 15 days, freight/labor prices subject to change. Install/labor quoted is Not at prevailing wages rates unless specifically noted.....

CUSTOMER HEREBY SUBMITS ITS OFFER TO PURCHASE THE EQUIPMENT ACCORDING TO THE TERMS STATED IN THIS QUOTE AND SUBJECT TO FINAL APPROVAL BY PPLT.

_____ _____ _____

Submitted By (Signature) Printed Name and Title Date

The foregoing quote and offer are hereby approved and accepted by PPLT.

By: _____ Date _____

_____ Quote # 2140022501

PLEASE NOTE: GRAND TOTAL COST IS LISTED ON PAGE TWO

ADDITIONAL TERMS AND CONDITIONS OF SALE

1. Use and Maintenance. Customer agrees to regularly inspect and maintain the Equipment, and to provide, inspect and maintain appropriate safety surfacing under around the Equipment, in accordance with PPLT's product literature and the most current Consumer Product Safety Commission Handbook for Public Playground Safety.

2. Default, Remedies Delinquency Charges. Customer's failure to pay any invoice when due, or its failure to otherwise comply with the terms of this Quote, shall constitute a default under all unsatisfied invoices ("Event of Default"). Upon an Event of Default, PPLT shall have all remedies available to it at law or equity, including, without limitation, all remedies afforded a secured creditor under the Uniform Commercial Code. Customer agrees to assist and cooperate with PPLT to accomplish its filing and enforcement of mechanic's or other liens with respect to the Equipment or its location or its repossession of the Equipment and Customer expressly waives all rights to possess the Equipment after an Event of Default. All remedies are cumulative and not alternative, and no exercise by PPLT of a remedy will prohibit or waive the exercise of any other remedy.Customer shall pay all reasonable attorneys' fees plus any costs of collection incurred by PPLT in enforcing its rights hereunder. Subject to any limitations under law, Customer shall pay to PPLT as liquidated damages, and not as a penalty, an amount equal to 1.5% per month of any payment .that is delinquent in such month and is not received by PPLT within ten (10) days after the date on which due...

3. Limitation of Warranty/ Indemnity. PPLT MAKES NO EQUIPMENT WARRANTIES EXCEPT FOR THOSE STANDARD WARRANTIES ISSUED WITH THE EQUIPMENT, WHICH ARE INCORPORATED HEREIN BY THIS REFERENCE. PPLT SPECIFICALLY DISCLAIMS ANY IMPLIED WARRANTY OF MERCHANTABILITY OR FITNESS FOR A PARTICULAR PURPOSE AND ANY LIABILITY FOR INCIDENTAL OR CONSEQUENTIAL DAMAGES. CUSTOMER AGREES TO DEFEND, INDEMNIFY AND SAVE PPLT HARMLESS FROM ALL CLAIMS OF ANY KIND FOR DAMAGES OF ANY KIND ARISING OUT OF CUSTOMER'S ALTERATION OF THE EQUIPMENT, ITS FAILURE TO MAINTAIN THE EQUIPMENT, ITS FAILURE TO PROPERLY SUPERVISE EQUIPMENT USE, OR ITS FAILURE TO PROVIDE AND MAINTAIN APPROPRIATE TYPES AND DEPTHS OF SAFETY SURFACING BENEATH AND AROUND THE EQUIPMENT IN ACCORDANCE WITH PPLT'S INSTALLATION AND OWNER'S MANUALS AND THE MOST CURRENT CONSUMER PRODUCT SAFETY COMMISSION HANDBOOK FOR PUBLIC PLAYGROUND SAFETY.

4. Restrictions. Until all amounts due hereunder are paid in full, Customer shall not: (i) permit the Equipment to be levied upon or attached under any legal process; (ii) transfer title to the Equipment or any of Customer's rights therein; or (iii) remove or permit the removal of the Equipment to any location not specified in this Quote.

5. Purchase Money Security Interest. Customer hereby grants, pledges and assigns to PPLT, and PPLT hereby reserves a purchase money security interest in, the Equipment in order to secure the payment and performance in full of all of Customer's obligations hereunder. Customer agrees that PPLT may file one or more financing statements, in order to allow it to perfect, acquire and maintain a superior security interest in the Equipment.

6. Choice of Law and Jurisdiction. All agreements between Customer and PPLT shall be interpreted, and the parties' obligations shall be governed, by the laws of the State of Missouri without reference to its choice of law provisions. Customer hereby consents to the personal jurisdiction of the state and federal courts located in the city and county of St. Louis, Missouri.

7. Title; Risk of Loss; Insurance. PPLT Retains full title to all Equipment until full payment is received by PPLT. Customer assumes all risk of loss or destruction of or damage to the Equipment by reason of theft, fire, water, or any other cause, occurrence of any such casualty shall not relieve the Customer from its obligations hereunder and under any invoices. Until all amounts due hereunder are paid in full, Customer shall insure the Equipment against all such losses and casualties.

8. Waiver; Invalidity.PPLT may waive a default hereunder, or under any invoice or other agreement between Customer PPLT, or cure such a default at Customer's expense, but shall have no obligation to do either. No waiver shall be deemed to have taken place unless it is in writing, signed by PPLT. Any one waiver shall not constitute a waiver of other defaults or the same kind of default at another time, or a forfeiture of any rights provided to PPLT hereunder or under any invoice.The invalidity of any portion of this Quote shall not affect the force and effect of the remaining valid portions hereof.

9. Entire Agreement; Amendment; Binding Nature.This fully-executed Quote, as supplemented by Change Orders invoices containing exact amounts of estimates provided herein, constitutes the complete and exclusive agreement between the parties. A Change Order is a written instrument signed by the Customer and PPLT stating their agreement as to any amendment in the terms of this Quote. Customer acknowledges that Change Orders may result in delays and additional costs. The parties agree that all Change Orders shall include appropriate adjustments in price and time frames relating to any requested amendments Upon full execution, this Quote shall be binding upon and inure to the benefit of the parties and their successors and assigns..

10. Counterparts; Electronic Transmission. This Quote, any invoice, and any other agreement between the parties, may be executed in counterparts, each of which shall constitute an original.The facsimile or other electronic transmission of any signed original document,retransmission of any signed facsimile or other electronic transmission, shall be the same as the transmission of an original. At the request of either party, the parties will confirm facsimile or other electronically transmitted signatures by signing an original document..

PLEASE NOTE: GRAND TOTAL COST IS LISTED ON PAGE TWO

GENERAL NOTES

AGE GROUP

☑ 2-5YRS ☐ 5-12YRS ☐ 2-12YRS ☐ 13YRS

1. THE AMERICANS WITH DISABILITIES ACT (ADA) MAY REQUIRE THAT YOU MAKE YOUR PARK AND/OR PLAYGROUND ACCESSIBLE WHEN VIEWED IN ITS ENTIRETY. PLEASE CONSULT YOUR LEGAL COUNSEL TO DETERMINE IF THE ADA APPLIES TO YOU.
2. FOR PLAYGROUND EQUIPMENT TO BE CONSIDERED ACCESSIBLE ACCESSIBLE SURFACING MUST BE UTILIZED IN APPLICABLE AREAS.
3. ALTHOUGH A PARTICULAR PLAYGROUND DESIGN MY NOT MEET THE PROPOSED ACCESS BOARD REGULATIONS IN REGARDS TO THE APPROPRIATE NUMBER OF GROUND LEVEL EVENTS THE ACTUAL PLAYGROUND MAY BE IN COMPLIANCE WHEN CONSIDERING EXISTING PLAY COMPONENTS.
4. ALL DECK HEIGHTS ARE MEASURED FROM TOP OF GROUND COVER.
5. FALL ABSORBING GROUND COVER IS REQUIRED UNDER AND AROUND ALL PLAY EQUIPMENT.
6. THE MINIMUM RECOMMENDED FALL ZONE AROUND THE ENTIRE PLAYSTRUCTURE IS SHOWN. THIS ZONE IS TO BE FREE OF ALL TRIPPING OR COLLISION HAZARDS (I.E. ROOTS ROCKS BORDER MATERIAL ETC.).
7. ALL POST LENGTHS ARE IDENTIFIED BY TEXT SHOWING THE POST LENGTHS I.E. 96 REPRESENTS A 96 INCH POST.
8. NOT ALL EQUIPMENT MAY BE APPROPRIATE FOR ALL CHILDREN. SUPERVISION IS REQUIRED.

1) Replace Loop Climber with Pod Climber
2) Replace Sliding Pole with Rung Ladder
3) Replace Inverted Arch with Bumpy Climber
4) Add Post Wheel below for compliance

.

double check colors

little tikes COMMERCIAL

AGE GROUP:	2-5_ASTM		
ELEVATED PLAY ACTIVITIES - TOTAL:	8		
ELEVATED PLAY ACTIVITIES ACCESIBLE BY TRANSFER:	8	REQ'D	4
ELEVATED PLAY ACTIVITIES ACCESIBLE BY RAMP:	0	REQ'D	0
GROUND LEVEL ACTIVITY TYPE:	3	REQ'D	3
GROUND LEVEL QUANTITY:	3	REQ'D	3

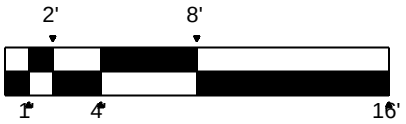

RUNG LADDER 200201022

DBL WIDE PLASTIC SLIDE 200200330

POD CLIMBER 200202438

QUAD ROOF 200060686

SAFETY RAIL W/WHEEL 200054616

VILLAGE SEAT PANEL 200054654

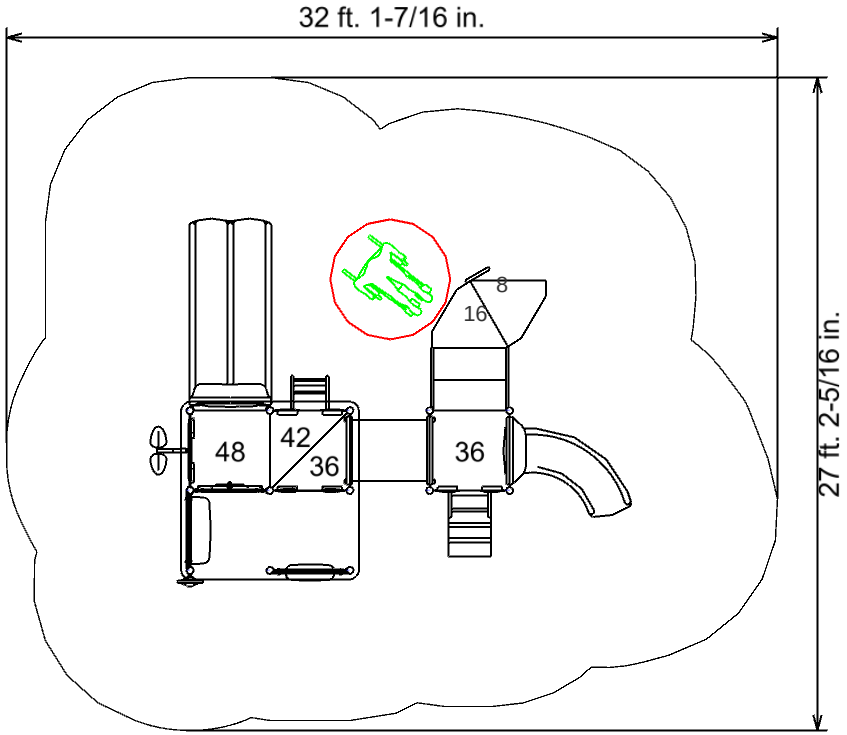

POST WHEEL PLASTIC 200203578

VILLAGE COUNTER PANEL 200054653

TRANSFER STATION 200200432

ELBOW SLIDE 200064815

BUMPY CLIMBER 200202879

CRAWL TUNNEL 200063639

PROJECT:

Burbank USD - Emerson TK A-5

LTCPS REP:

Guy Donahoe
GUY DONAHOE
714-846-4885

GROUND SPACE: 20'-6" x 15'-6"
PROTECTIVE AREA: 32'-6" x 27'-6"

DRAWN BY: Tracy Grabow
DATE: 04/16/2026
PROJECT: 26007492

LTCPS - FARMINGTON
878 EAST HIGHWAY 60
MONETT MO 65708
VOICE: 1-800-325-8828
FAX: 417-354-2273

PLAYGROUND LAYOUT COMPLIANCE:

☑ THIS PLAYGROUND DESIGN MEETS THE FINAL ACCESS BOARD REGULATION.

Make Purchase Order/Check payable to:PlayPower LT Farmington, Inc.
c/o Pacific Park and Play 714 846-4885 fax 714 846-3485
P.O. Box 734155, Dallas, TX 75373-4155 email: pacificdzn@aol.com

QUOTATION

PlayPower LT Farmington, Inc.

Contact PlayPower LT Farmington at 800-325-8828

Sales Person: GUY DONAHOE Pacific Park and Play

SITE LOCATION

Quote # 2140022499 Date 4/24/2026

Version 1

BURBANK USD - JEFFERSON TRANSITIONAL KINDERGARTEN

BURBANK, CA 915

Site Phone:

Site Fax:

attn: MALIHE SHOKOUHI

RE:: BURBANK USD - JEFFERSON TRANSITIONAL KINDER

BILL TO

Customer PO#

BURBANK UNIFIED SCHOOL DISTRICT
1900 OLIVE STREET

BURBANK, CA 91505
ATTN: MALIHE SHOKOUHI
Phone: (213) 718-0462 Ext.:
Fax:

QTY:	ITEM #	Description	Unit Price	Extended Price
2	LTCPS-1-05274	PLAY BUILDER SQUARE DECK. INCLUDES HARDWARE BAG.	$963.3400	$1,926.68
2	LTCPS-2-111492	IDENTIFICATION LABEL STAMPED WITH RIVETS.	$5.5272	$11.05
2	LTCPS-2-200196	PLAY BUILDER 8" DECK TO DECK PANEL WITH FACES (ACCENT COLOR). INCLUDES HARDWARE.	$184.2400	$368.48
1	LTCPS-2-202438	PLAY BUILDER VERTICAL POD CLIMBER FOR 48" DECK HEIGHT. INCLUDES ENCLOSURE, PODS, CAPS & HARDWARE.	$2,044.2800	$2,044.28
4	LTCPS-2-202616	PLAY BUILDER 130" POST WITH CAP.	$270.4800	$1,081.92
1	LTCPS-2-202879	PLAY BUILDER BUMPY CLIMBER FOR 40" DECK. INCLUDES LOOPS, ANCHOR TUBE, CAPS, TAB RAILS, GASKETS & HARDWARE BAG.	$2,532.3200	$2,532.32
1	LTCPS-2-203578	PLAY BUILDER STEERING WHEEL , PLASTIC, POST MOUNT.	$330.2600	$330.26
1	LTCPS-2-203924	PLAY BUILDER MINI GLIDING GEARS INSERT.	$533.1200	$533.12

PLEASE NOTE: GRAND TOTAL COST IS LISTED ON PAGE TWO

1	LTCPS-2-203941	PLAY BUILDER POST PLAYERS MINI INSERT PANEL.	$311.6400	$311.64
1	LTCPS-2-58751	PLAY BUILDER 8' ARCH BRIDGE WITH SAFETY RAILS AND HARDWARE.	$3,328.0801	$3,328.08
2	LTCPS-2-83503	PLAY BUILDER 24" TRANSFER STATION INCLUDES DECK, 2 SNO CONE DECKS, KICK PLATES, TRANSFER LOOP, FOOTING AND HARDWARE.	$2,074.6600	$4,149.32
2	LTCPS-925601	2 - 5 AGE LABEL.	$7.9772	$15.95
1	SPECTR-JEFFERSON	SPECTRATURF SAFETY PLAYGRASS, 12 SQ/FT, 3" THICK, PATCH & REPAIR OF PLAYGRASS, INCLUDES PROVISION & INSTALLATION OF SAND INFILL MATERIALS. INCLUDES MATERIAL, FREIGHT, INSTALLATION & SALES TAX.	$4,344.0000	$4,344.00

PLEASE NOTE: GRAND TOTAL COST IS LISTED ON PAGE TWO

ENTER SHIP TO ADDRESS IF DIFFERENT FROM SITE ADDRESS.

SubTotal	$20,977.11
Install	$3,511.00
PBO Amount	
PBO Freight	
Freight	$5,590.00
TAX RATE	10.50%
TAX	$1,746.48
TOTAL	$31,824.59

Credit Report Required: No

Installer:	Installation Quote:
PSI	$3,511.00

Special Instructions: Terms: Net 30 days

PURCHASE ORDER INFORMATION IS ABOVE ON THE FIRST PAGE OF THE QUOTATION.

DISCOUNT IS PER SOURCEWELL / NJPA CONTRACT #101625-PLP. SOURCEWELL MEMBER #11938.

REMOVAL, DISPOSAL & INSTALLATION ARE INCLUDED IN TOTAL.

PLEASE BE ADVISED THAT IF ANY PARTS NEED TO BE RETURNED, YOU WILL NEED TO PAY FREIGHT BOTH WAYS AND THE RESTOCKING FEE.

CLIENT IS RESPONSIBLE FOR RECEIVING / OFFLOADING EQUIPMENT. CLIENT IS RESPONSIBLE FOR CHECKING FOR AND NOTING SHIPPING DAMAGE, IF ANY, WHEN RECEIVING EQUIPMENT AT DELIVERY TIME.

THANK YOU!

This Quote shall not become a binding contract until signed and delivered by both Customer and PlayPower LT Farmington Inc ("PPLT"). Sales Representative is not authorized to sign this Quote on behalf of PPLT or Customer, and signed Quotes cannot be accepted from Sales Rep.To Submit this offer, please sign below forward a complete signed copy of this Quote directly to "PPLT Sales Administrator" via fax (714) 846-3485 or email pacificdzn@aol.com. Upon acceptance, PPLT will return a fully-signed copy of the Quote to Customer with copy to Sales Representative via fax or email. THIS QUOTE IS LIMITED TO AND GOVERNED BY THE TERMS CONTAINED HEREIN. PPLT objects to any other terms proposed by Customer, in writing or otherwise, as material alterations, all such proposed terms shall be void. Customer authorizes PPLT to ship the Equipment and agrees to pay PPLTthe total amount specified. Shipping terms are FOB the place of shipment via common carrier designated by PPLT. Payment terms are Net-30 days from invoice date with approved credit all charges are due and payable in full at P.O. Box 734155, Dallas, TX 75373-4155, unless notified otherwise by PPLT in writing.Customer agrees to pay all additional service charges for pastdue invoices.Customer must provide proper tax exemption certificates to PPLT, shall promptly pay discharge all otherwise applicable taxes, license fees, levies other impositions on the Equipment at its own expense. Equipment quote valid for 15 days, freight/labor prices subject to change. Install/labor quoted is Not at prevailing wages rates unless specifically noted.....

CUSTOMER HEREBY SUBMITS ITS OFFER TO PURCHASE THE EQUIPMENT ACCORDING TO THE TERMS STATED IN THIS QUOTE AND SUBJECT TO FINAL APPROVAL BY PPLT.

_____ _____ _____

Submitted By (Signature) Printed Name and Title Date

The foregoing quote and offer are hereby approved and accepted by PPLT.

By: _____ Date _____

_____ Quote # 2140022499

PLEASE NOTE: GRAND TOTAL COST IS LISTED ON PAGE TWO

ADDITIONAL TERMS AND CONDITIONS OF SALE

1. Use and Maintenance. Customer agrees to regularly inspect and maintain the Equipment, and to provide, inspect and maintain appropriate safety surfacing under around the Equipment, in accordance with PPLT's product literature and the most current Consumer Product Safety Commission Handbook for Public Playground Safety.

2. Default, Remedies Delinquency Charges. Customer's failure to pay any invoice when due, or its failure to otherwise comply with the terms of this Quote, shall constitute a default under all unsatisfied invoices ("Event of Default"). Upon an Event of Default, PPLT shall have all remedies available to it at law or equity, including, without limitation, all remedies afforded a secured creditor under the Uniform Commercial Code. Customer agrees to assist and cooperate with PPLT to accomplish its filing and enforcement of mechanic's or other liens with respect to the Equipment or its location or its repossession of the Equipment and Customer expressly waives all rights to possess the Equipment after an Event of Default. All remedies are cumulative and not alternative, and no exercise by PPLT of a remedy will prohibit or waive the exercise of any other remedy.Customer shall pay all reasonable attorneys' fees plus any costs of collection incurred by PPLT in enforcing its rights hereunder. Subject to any limitations under law, Customer shall pay to PPLT as liquidated damages, and not as a penalty, an amount equal to 1.5% per month of any payment .that is delinquent in such month and is not received by PPLT within ten (10) days after the date on which due...

3. Limitation of Warranty/ Indemnity. PPLT MAKES NO EQUIPMENT WARRANTIES EXCEPT FOR THOSE STANDARD WARRANTIES ISSUED WITH THE EQUIPMENT, WHICH ARE INCORPORATED HEREIN BY THIS REFERENCE. PPLT SPECIFICALLY DISCLAIMS ANY IMPLIED WARRANTY OF MERCHANTABILITY OR FITNESS FOR A PARTICULAR PURPOSE AND ANY LIABILITY FOR INCIDENTAL OR CONSEQUENTIAL DAMAGES. CUSTOMER AGREES TO DEFEND, INDEMNIFY AND SAVE PPLT HARMLESS FROM ALL CLAIMS OF ANY KIND FOR DAMAGES OF ANY KIND ARISING OUT OF CUSTOMER'S ALTERATION OF THE EQUIPMENT, ITS FAILURE TO MAINTAIN THE EQUIPMENT, ITS FAILURE TO PROPERLY SUPERVISE EQUIPMENT USE, OR ITS FAILURE TO PROVIDE AND MAINTAIN APPROPRIATE TYPES AND DEPTHS OF SAFETY SURFACING BENEATH AND AROUND THE EQUIPMENT IN ACCORDANCE WITH PPLT'S INSTALLATION AND OWNER'S MANUALS AND THE MOST CURRENT CONSUMER PRODUCT SAFETY COMMISSION HANDBOOK FOR PUBLIC PLAYGROUND SAFETY.

4. Restrictions. Until all amounts due hereunder are paid in full, Customer shall not: (i) permit the Equipment to be levied upon or attached under any legal process; (ii) transfer title to the Equipment or any of Customer's rights therein; or (iii) remove or permit the removal of the Equipment to any location not specified in this Quote.

5. Purchase Money Security Interest. Customer hereby grants, pledges and assigns to PPLT, and PPLT hereby reserves a purchase money security interest in, the Equipment in order to secure the payment and performance in full of all of Customer's obligations hereunder. Customer agrees that PPLT may file one or more financing statements, in order to allow it to perfect, acquire and maintain a superior security interest in the Equipment.

6. Choice of Law and Jurisdiction. All agreements between Customer and PPLT shall be interpreted, and the parties' obligations shall be governed, by the laws of the State of Missouri without reference to its choice of law provisions. Customer hereby consents to the personal jurisdiction of the state and federal courts located in the city and county of St. Louis, Missouri.

7. Title; Risk of Loss; Insurance. PPLT Retains full title to all Equipment until full payment is received by PPLT. Customer assumes all risk of loss or destruction of or damage to the Equipment by reason of theft, fire, water, or any other cause, occurrence of any such casualty shall not relieve the Customer from its obligations hereunder and under any invoices. Until all amounts due hereunder are paid in full, Customer shall insure the Equipment against all such losses and casualties.

8. Waiver; Invalidity.PPLT may waive a default hereunder, or under any invoice or other agreement between Customer PPLT, or cure such a default at Customer's expense, but shall have no obligation to do either. No waiver shall be deemed to have taken place unless it is in writing, signed by PPLT. Any one waiver shall not constitute a waiver of other defaults or the same kind of default at another time, or a forfeiture of any rights provided to PPLT hereunder or under any invoice.The invalidity of any portion of this Quote shall not affect the force and effect of the remaining valid portions hereof.

9. Entire Agreement; Amendment; Binding Nature.This fully-executed Quote, as supplemented by Change Orders invoices containing exact amounts of estimates provided herein, constitutes the complete and exclusive agreement between the parties. A Change Order is a written instrument signed by the Customer and PPLT stating their agreement as to any amendment in the terms of this Quote. Customer acknowledges that Change Orders may result in delays and additional costs. The parties agree that all Change Orders shall include appropriate adjustments in price and time frames relating to any requested amendments Upon full execution, this Quote shall be binding upon and inure to the benefit of the parties and their successors and assigns..

10. Counterparts; Electronic Transmission. This Quote, any invoice, and any other agreement between the parties, may be executed in counterparts, each of which shall constitute an original.The facsimile or other electronic transmission of any signed original document,retransmission of any signed facsimile or other electronic transmission, shall be the same as the transmission of an original. At the request of either party, the parties will confirm facsimile or other electronically transmitted signatures by signing an original document..

GENERAL NOTES

AGE GROUP

☑ 2-5YRS ☐ 5-12YRS ☐ 2-12YRS ☐ 13YRS

1. THE AMERICANS WITH DISABILITIES ACT (ADA) MAY REQUIRE THAT YOU MAKE YOUR PARK AND/OR PLAYGROUND ACCESSIBLE WHEN VIEWED IN ITS ENTIRETY. PLEASE CONSULT YOUR LEGAL COUNSEL TO DETERMINE IF THE ADA APPLIES TO YOU.
2. FOR PLAYGROUND EQUIPMENT TO BE CONSIDERED ACCESSIBLE ACCESSIBLE SURFACING MUST BE UTILIZED IN APPLICABLE AREAS.
3. ALTHOUGH A PARTICULAR PLAYGROUND DESIGN MY NOT MEET THE PROPOSED ACCESS BOARD REGULATIONS IN REGARDS TO THE APPROPRIATE NUMBER OF GROUND LEVEL EVENTS THE ACTUAL PLAYGROUND MAY BE IN COMPLIANCE WHEN CONSIDERING EXISTING PLAY COMPONENTS.
4. ALL DECK HEIGHTS ARE MEASURED FROM TOP OF GROUND COVER.
5. FALL ABSORBING GROUND COVER IS REQUIRED UNDER AND AROUND ALL PLAY EQUIPMENT.
6. THE MINIMUM RECOMMENDED FALL ZONE AROUND THE ENTIRE PLAYSTRUCTURE IS SHOWN. THIS ZONE IS TO BE FREE OF ALL TRIPPING OR COLLISION HAZARDS (I.E. ROOTS ROCKS BORDER MATERIAL ETC.).
7. ALL POST LENGTHS ARE IDENTIFIED BY TEXT SHOWING THE POST LENGTHS I.E. 96 REPRESENTS A 96 INCH POST.
8. NOT ALL EQUIPMENT MAY BE APPROPRIATE FOR ALL CHILDREN. SUPERVISION IS REQUIRED.

1) Remove (2) 36" decks, replace with new decks at 40" height with deck to deck plates
2) Remove Challenge Ladder, replace with Arch Bridge
3) Remove Loop Climber, replace with Pod Climber
4) Remove Curly Climber, Move Safety Rail next to Dbl Wide slide, place new Bumpy Climber where safety rail used to be.
5) Remove Turn bar, add below wheel and below post player mini panel
6) replace transfer station decks
7) expand safety surfacing for existing slide
8) Move Village Seat below slide

AGE GROUP: 2-5_ASTM			
ELEVATED PLAY ACTIVITIES - TOTAL: 10			
ELEVATED PLAY ACTIVITIES ACCESIBLE BY TRANSFER:	10	REQ'D	5
ELEVATED PLAY ACTIVITIES ACCESIBLE BY RAMP:	0	REQ'D	0
GROUND LEVEL ACTIVITY TYPE:	2	REQ'D	3
GROUND LEVEL QUANTITY:	2	REQ'D	3

Colors:
Brown Vinyl
Blue Posts
Yellow Accents
Yellow KV panels
Green Panels
Red/Yellow Mini Panel
Red Wheel

TIC-TAC-TOE PANEL 200054626

VILLAGE SEAT PANEL 200054654

SEVEN STATION PLAY FACTORY 200065770

ROOF 200109105

48 ft. 3-11/16 in.

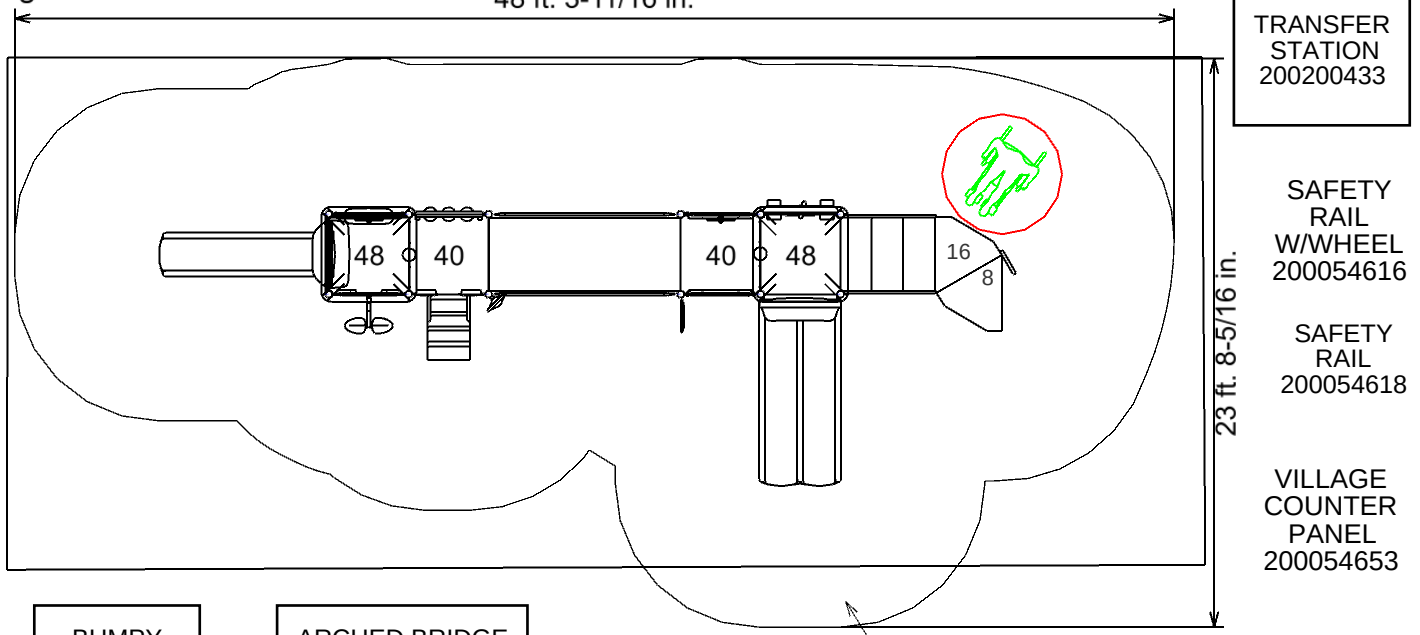

TRANSFER STATION 200200433

ROOF 200109105

SGL PLASTIC WAVE SLIDE 200064813

SAFETY RAIL W/WHEEL 200054616

SAFETY RAIL W/WHEEL 200054616

SAFETY RAIL 200054618

VILLAGE COUNTER PANEL 200054653

DBL WIDE PLASTIC SLIDE 200200330

POD CLIMBER 200202438

BUMPY CLIMBER 200202879

ARCHED BRIDGE W/SAFETY RAILS 200058751

POST WHEEL PLASTIC 200203578

POST PLAYERS MINI INSERT PANEL F/PB 200203941

MINI GLIDING GEARS INSERT 200203924

Expand Safety Surfacing For Existing Slide

PROJECT:
Yard Plan A
Burbank USD - Jefferson ES TK

LTCPS REP:
Guy Donahoe
GUY DONAHOE
714-846-4885

GROUND SPACE: 36' x 12'-6"
PROTECTIVE AREA: 48'-6" x 24'

DRAWN BY: Guy Donahoe
DATE: 04/20/2026
PROJECT: 26007492

LTCPS - FARMINGTON
878 EAST HIGHWAY 60
MONETT MO 65708
VOICE: 1-800-325-8828
FAX: 417-354-2273

PLAYGROUND LAYOUT COMPLIANCE:

☑ THIS PLAYGROUND DESIGN MEETS THE FINAL ACCESS BOARD REGULATION.

Make Purchase Order/Check payable to:PlayPower LT Farmington, Inc.
c/o Pacific Park and Play 714 846-4885 fax 714 846-3485
P.O. Box 734155, Dallas, TX 75373-4155 email: pacificdzn@aol.com

QUOTATION

PlayPower LT Farmington, Inc.

Contact PlayPower LT Farmington at 800-325-8828

Sales Person: GUY DONAHOE Pacific Park and Play

SITE LOCATION

Quote # 2140022498 Date 4/24/2026

Version 1

BURBANK USD - BRET HARTE TRANSITIONAL KINDERGARTEN

BURBANK, CA 915

Site Phone:

Site Fax:

attn: MALIHE SHOKOUHI

RE:: BURBANK USD - BRET HARTE TRANSITIONAL KINDE

BILL TO

Customer PO#

BURBANK UNIFIED SCHOOL DISTRICT
1900 OLIVE STREET

BURBANK, CA 91505
ATTN: MALIHE SHOKOUHI
Phone: (213) 718-0462 Ext.:
Fax:

QTY:	ITEM #	Description	Unit Price	Extended Price
1	LTCPS-2-06978	KID BUILDER ELBOW PLASTIC SLIDE FOR 32"/36" DECK WITH HOOD, FOOTINGS, CLAMPS & HARDWARE.	$1,764.0000	$1,764.00
1	LTCPS-2-07012	KID BUILDER ARCH CLIMBER, INVERTED FOR 48" DECK WITH SAFETY LOOPS, CLAMPS AND HARDWARE.	$1,611.1200	$1,611.12
1	LTCPS-2-111492	IDENTIFICATION LABEL STAMPED WITH RIVETS.	$5.5272	$5.53
1	LTCPS-2-14951	KID BUILDER RUNG LADDER FOR 36" DECK WITH SAFETY LOOPS, CLAMPS AND HARDWARE BAG.	$1,133.8600	$1,133.86
1	LTCPS-2-202431	KID BUILDER 48" VERTICAL POD CLIMBER. INCLUDES ENCLOSURES, CLAMPS AND HARDWARE.	$2,220.6800	$2,220.68
1	LTCPS-2-202483	KID BUILDER 11 GAUGE SQUARE DECK, LARGE HOLE. INCLUDES DECK CLAMPS AND HARDWARE.	$1,392.5800	$1,392.58

PLEASE NOTE: GRAND TOTAL COST IS LISTED ON PAGE TWO

1	LTCPS-2-202554	KID BUILDER 11 GAUGE 36" TRANSFER STATION WITH STEPS, 2 SNO CONE SHAPED DECKS, SAFETY RAILS, TRANSFER LOOP, CLAMPS, FOOTINGS & HARDWARE BAG.	$3,787.7001	$3,787.70
1	LTCPS-2-41635	KID BUILDER "S" CRAWL TUNNEL WITH FLAT TOP, 30" DIAMETER. INCLUDES CLAMPS AND HARDWARE.	$3,150.7001	$3,150.70
2	LTCPS-925601	2 - 5 AGE LABEL.	$7.9772	$15.95
1	LTCPS-HW7704-1	HARDWARE BAG FOR CLAMP ELIMINATION.	$50.9600	$50.96
1	SPECTR-BRETPATCH	SPECTRATURF SAFETY PLAYGRASS, 20 SQ/FT, 3" THICK, PATCH & REPAIR OF PLAYGRASS, INCLUDES PROVISION & INSTALLATION OF SAND INFILL MATERIALS.	$4,382.0000	$4,382.00

ENTER SHIP TO ADDRESS IF DIFFERENT FROM SITE ADDRESS.

SubTotal	$19,515.08
Install	$5,402.00
PBO Amount	
PBO Freight	
Freight	$3,470.00
TAX RATE	10.50%
TAX	$1,588.97
TOTAL	$29,976.06

Credit Report Required: No

Installer:	Installation Quote:
PSI	$5,402.00

Special Instructions: Terms: Net 30 days

PURCHASE ORDER INFORMATION IS ABOVE ON THE FIRST PAGE OF THE QUOTATION.

DISCOUNT IS PER SOURCEWELL / NJPA CONTRACT #101625-PLP. SOURCEWELL MEMBER #11938.

REMOVAL, DISPOSAL & INSTALLATION ARE INCLUDED IN TOTAL.

PLEASE BE ADVISED THAT IF ANY PARTS NEED TO BE RETURNED, YOU WILL NEED TO PAY FREIGHT BOTH WAYS AND THE RESTOCKING FEE.

CLIENT IS RESPONSIBLE FOR RECEIVING / OFFLOADING EQUIPMENT. CLIENT IS RESPONSIBLE FOR CHECKING FOR AND NOTING SHIPPING DAMAGE, IF ANY, WHEN RECEIVING EQUIPMENT AT DELIVERY TIME.

THANK YOU!

This Quote shall not become a binding contract until signed and delivered by both Customer and PlayPower LT Farmington Inc ("PPLT"). Sales Representative is not authorized to sign this Quote on behalf of PPLT or Customer, and signed Quotes cannot be accepted from Sales Rep.To Submit this offer, please sign below forward a complete signed copy of this Quote directly to "PPLT Sales Administrator" via fax (714) 846-3485 or email pacificdzn@aol.com. Upon acceptance, PPLT will return a fully-signed copy of the Quote to Customer with copy to Sales Representative via fax or email. THIS QUOTE IS LIMITED TO AND GOVERNED BY THE TERMS CONTAINED HEREIN. PPLT objects to any other terms proposed by Customer, in writing or otherwise, as material alterations, all such proposed terms shall be void. Customer authorizes PPLT to ship the Equipment and agrees to pay PPLTthe total amount specified. Shipping terms are FOB the place of shipment via common carrier designated by PPLT. Payment terms are Net-30 days from invoice date with approved credit all charges are due and payable in full at P.O. Box 734155, Dallas, TX 75373-4155, unless notified otherwise by PPLT in writing.Customer agrees to pay all additional service charges for pastdue invoices.Customer must provide proper tax exemption certificates to PPLT, shall promptly pay discharge all otherwise applicable taxes, license fees, levies other impositions on the Equipment at its own expense. Equipment quote valid for 15 days, freight/labor prices subject to change. Install/labor quoted is Not at prevailing wages rates unless specifically noted.....

CUSTOMER HEREBY SUBMITS ITS OFFER TO PURCHASE THE EQUIPMENT ACCORDING TO THE TERMS STATED IN THIS QUOTE AND SUBJECT TO FINAL APPROVAL BY PPLT.

_____ _____ _____

Submitted By (Signature) Printed Name and Title Date

The foregoing quote and offer are hereby approved and accepted by PPLT.

By: _____ Date _____

_____ Quote # 2140022498

PLEASE NOTE: GRAND TOTAL COST IS LISTED ON PAGE TWO

ADDITIONAL TERMS AND CONDITIONS OF SALE

1. Use and Maintenance. Customer agrees to regularly inspect and maintain the Equipment, and to provide, inspect and maintain appropriate safety surfacing under around the Equipment, in accordance with PPLT's product literature and the most current Consumer Product Safety Commission Handbook for Public Playground Safety.

2. Default, Remedies Delinquency Charges. Customer's failure to pay any invoice when due, or its failure to otherwise comply with the terms of this Quote, shall constitute a default under all unsatisfied invoices ("Event of Default"). Upon an Event of Default, PPLT shall have all remedies available to it at law or equity, including, without limitation, all remedies afforded a secured creditor under the Uniform Commercial Code. Customer agrees to assist and cooperate with PPLT to accomplish its filing and enforcement of mechanic's or other liens with respect to the Equipment or its location or its repossession of the Equipment and Customer expressly waives all rights to possess the Equipment after an Event of Default. All remedies are cumulative and not alternative, and no exercise by PPLT of a remedy will prohibit or waive the exercise of any other remedy.Customer shall pay all reasonable attorneys' fees plus any costs of collection incurred by PPLT in enforcing its rights hereunder. Subject to any limitations under law, Customer shall pay to PPLT as liquidated damages, and not as a penalty, an amount equal to 1.5% per month of any payment .that is delinquent in such month and is not received by PPLT within ten (10) days after the date on which due...

3. Limitation of Warranty/ Indemnity. PPLT MAKES NO EQUIPMENT WARRANTIES EXCEPT FOR THOSE STANDARD WARRANTIES ISSUED WITH THE EQUIPMENT, WHICH ARE INCORPORATED HEREIN BY THIS REFERENCE. PPLT SPECIFICALLY DISCLAIMS ANY IMPLIED WARRANTY OF MERCHANTABILITY OR FITNESS FOR A PARTICULAR PURPOSE AND ANY LIABILITY FOR INCIDENTAL OR CONSEQUENTIAL DAMAGES. CUSTOMER AGREES TO DEFEND, INDEMNIFY AND SAVE PPLT HARMLESS FROM ALL CLAIMS OF ANY KIND FOR DAMAGES OF ANY KIND ARISING OUT OF CUSTOMER'S ALTERATION OF THE EQUIPMENT, ITS FAILURE TO MAINTAIN THE EQUIPMENT, ITS FAILURE TO PROPERLY SUPERVISE EQUIPMENT USE, OR ITS FAILURE TO PROVIDE AND MAINTAIN APPROPRIATE TYPES AND DEPTHS OF SAFETY SURFACING BENEATH AND AROUND THE EQUIPMENT IN ACCORDANCE WITH PPLT'S INSTALLATION AND OWNER'S MANUALS AND THE MOST CURRENT CONSUMER PRODUCT SAFETY COMMISSION HANDBOOK FOR PUBLIC PLAYGROUND SAFETY.

4. Restrictions. Until all amounts due hereunder are paid in full, Customer shall not: (i) permit the Equipment to be levied upon or attached under any legal process; (ii) transfer title to the Equipment or any of Customer's rights therein; or (iii) remove or permit the removal of the Equipment to any location not specified in this Quote.

5. Purchase Money Security Interest. Customer hereby grants, pledges and assigns to PPLT, and PPLT hereby reserves a purchase money security interest in, the Equipment in order to secure the payment and performance in full of all of Customer's obligations hereunder. Customer agrees that PPLT may file one or more financing statements, in order to allow it to perfect, acquire and maintain a superior security interest in the Equipment.

6. Choice of Law and Jurisdiction. All agreements between Customer and PPLT shall be interpreted, and the parties' obligations shall be governed, by the laws of the State of Missouri without reference to its choice of law provisions. Customer hereby consents to the personal jurisdiction of the state and federal courts located in the city and county of St. Louis, Missouri.

7. Title; Risk of Loss; Insurance. PPLT Retains full title to all Equipment until full payment is received by PPLT. Customer assumes all risk of loss or destruction of or damage to the Equipment by reason of theft, fire, water, or any other cause, occurrence of any such casualty shall not relieve the Customer from its obligations hereunder and under any invoices. Until all amounts due hereunder are paid in full, Customer shall insure the Equipment against all such losses and casualties.

8. Waiver; Invalidity.PPLT may waive a default hereunder, or under any invoice or other agreement between Customer PPLT, or cure such a default at Customer's expense, but shall have no obligation to do either. No waiver shall be deemed to have taken place unless it is in writing, signed by PPLT. Any one waiver shall not constitute a waiver of other defaults or the same kind of default at another time, or a forfeiture of any rights provided to PPLT hereunder or under any invoice.The invalidity of any portion of this Quote shall not affect the force and effect of the remaining valid portions hereof.

9. Entire Agreement; Amendment; Binding Nature.This fully-executed Quote, as supplemented by Change Orders invoices containing exact amounts of estimates provided herein, constitutes the complete and exclusive agreement between the parties. A Change Order is a written instrument signed by the Customer and PPLT stating their agreement as to any amendment in the terms of this Quote. Customer acknowledges that Change Orders may result in delays and additional costs. The parties agree that all Change Orders shall include appropriate adjustments in price and time frames relating to any requested amendments Upon full execution, this Quote shall be binding upon and inure to the benefit of the parties and their successors and assigns..

10. Counterparts; Electronic Transmission. This Quote, any invoice, and any other agreement between the parties, may be executed in counterparts, each of which shall constitute an original.The facsimile or other electronic transmission of any signed original document,retransmission of any signed facsimile or other electronic transmission, shall be the same as the transmission of an original. At the request of either party, the parties will confirm facsimile or other electronically transmitted signatures by signing an original document..

GENERAL NOTES

AGE GROUP

☑ 2-5YRS ☐ 5-12YRS ☐ 2-12YRS ☐ 13YRS

1. THE AMERICANS WITH DISABILITIES ACT (ADA) MAY REQUIRE THAT YOU MAKE YOUR PARK AND/OR PLAYGROUND ACCESSIBLE WHEN VIEWED IN ITS ENTIRETY. PLEASE CONSULT YOUR LEGAL COUNSEL TO DETERMINE IF THE ADA APPLIES TO YOU.
2. FOR PLAYGROUND EQUIPMENT TO BE CONSIDERED ACCESSIBLE ACCESSIBLE SURFACING MUST BE UTILIZED IN APPLICABLE AREAS.
3. ALTHOUGH A PARTICULAR PLAYGROUND DESIGN MY NOT MEET THE PROPOSED ACCESS BOARD REGULATIONS IN REGARDS TO THE APPROPRIATE NUMBER OF GROUND LEVEL EVENTS THE ACTUAL PLAYGROUND MAY BE IN COMPLIANCE WHEN CONSIDERING EXISTING PLAY COMPONENTS.
4. ALL DECK HEIGHTS ARE MEASURED FROM TOP OF GROUND COVER.
5. FALL ABSORBING GROUND COVER IS REQUIRED UNDER AND AROUND ALL PLAY EQUIPMENT.
6. THE MINIMUM RECOMMENDED FALL ZONE AROUND THE ENTIRE PLAYSTRUCTURE IS SHOWN. THIS ZONE IS TO BE FREE OF ALL TRIPPING OR COLLISION HAZARDS (I.E. ROOTS ROCKS BORDER MATERIAL ETC.).
7. ALL POST LENGTHS ARE IDENTIFIED BY TEXT SHOWING THE POST LENGTHS I.E. 96 REPRESENTS A 96 INCH POST.
8. NOT ALL EQUIPMENT MAY BE APPROPRIATE FOR ALL CHILDREN. SUPERVISION IS REQUIRED.

AGE GROUP:	2-5_ASTM			
ELEVATED PLAY ACTIVITIES - TOTAL:	8			
ELEVATED PLAY ACTIVITIES ACCESIBLE BY TRANSFER:	8	REQ'D	4	
ELEVATED PLAY ACTIVITIES ACCESIBLE BY RAMP:	0	REQ'D	0	
GROUND LEVEL ACTIVITY TYPE:	3	REQ'D	3	
GROUND LEVEL QUANTITY:	5	REQ'D	3	

1) Replace Inverted Arch with Safety Loop Inverted Arch
2) Remove Challenge Ladder, Loops and Single Rungs on deck
4) Move Animal Panel to 36" square deck
3) Install new Pod Climber in place of Animal Panel
4) Install "S" Crawl Tunnel at ground level using existing posts
5) Remove Turn Bar and move ground level Safety Panel w/Wheel over.
6) New Transfer Station
7) New Elbow Slide 36"
8) New square 36" deck
~
Colors: Brown Vinyl, Blue Posts, Yellow Accents, Blue Clamps, existing red plastics, new plastics blue

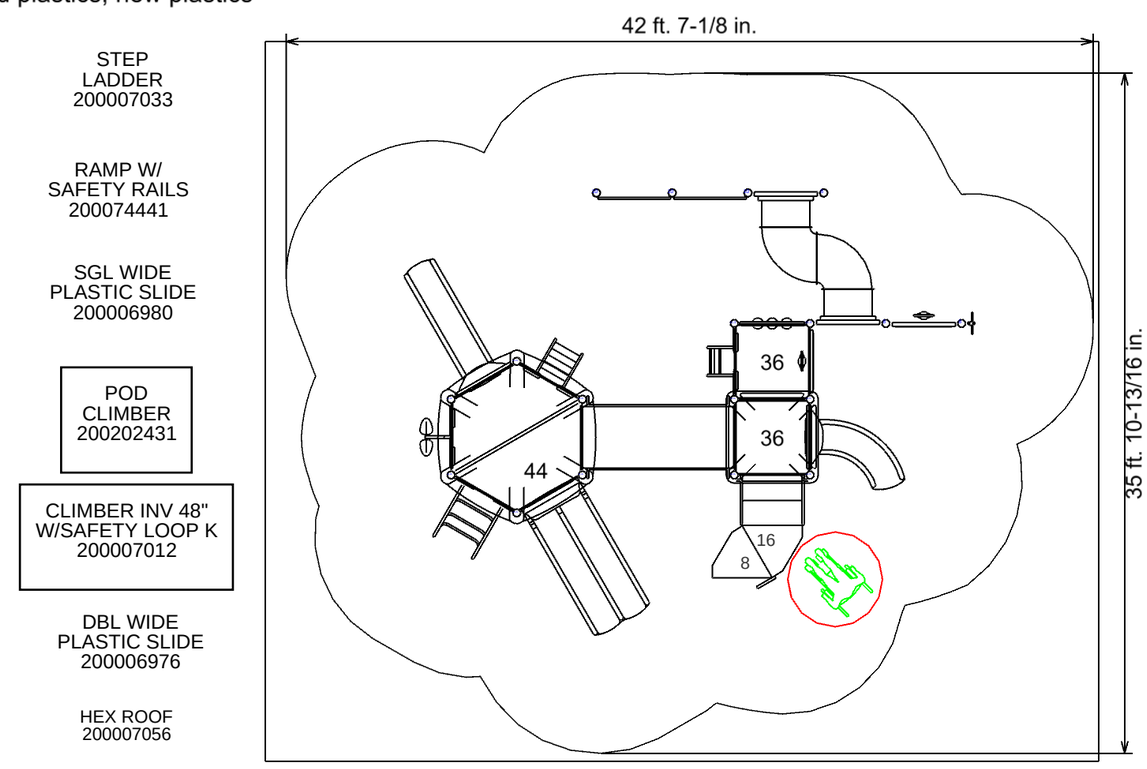

TURNING BAR 200013892

TURNING BAR 200013892

STEP LADDER 200007033

RAMP W/ SAFETY RAILS 200074441

SGL WIDE PLASTIC SLIDE 200006980

POD CLIMBER 200202431

CLIMBER INV 48" W/SAFETY LOOP K 200007012

DBL WIDE PLASTIC SLIDE 200006976

HEX ROOF 200007056

ANIMAL PANEL 200007048

S CRAWL TUNNEL 200041635

RUNG LADDER 3' 200014951

POST WHEEL ALUMINUM 200203572

SAFETY PANEL 200007128

SAFETY PANEL 200007049

ELBOW SLIDE 200006978

ROOF 200007137

TRANSFER STATION W/SAFETY RAILS 200202554

2' 8'
1' 4' 16'

PROJECT:

Burbank USD - Harte ES TK

LTCPS REP:

Guy Donahoe
GUY DONAHOE
714 846-4885

GROUND SPACE: 30'-6" x 24'
PROTECTIVE AREA: 43' x 36'

DRAWN BY: Tracy Grabow
DATE: 04/17/2026
PROJECT: 26007492

LTCPS - FARMINGTON
878 EAST HIGHWAY 60
MONETT MO 65708
VOICE: 1-800-325-8828
FAX: 417-354-2273

PLAYGROUND LAYOUT COMPLIANCE:

☑ ASTM F1487 - PLAYGROUND EQUIPMENT FOR PUBLIC USE

☑ CPSC HANDBOOK FOR PUBLIC PLAYGROUND SAFETY

☑ THIS PLAYGROUND DESIGN MEETS THE FINAL ACCESS BOARD REGULATION.

THE PLAY COMPONENTS IDENTIFIED IN THIS PLAN ARE IPEMA CERTIFIED. THE USE AND LAYOUT OF THE COMPONENTS CONFORM TO THE REQUIREMENTS OF ASTM F1487.

Make Purchase Order/Check payable to:PlayPower LT Farmington, Inc.
c/o Pacific Park and Play 714 846-4885 fax 714 846-3485
P.O. Box 734155, Dallas, TX 75373-4155 email: pacificdzn@aol.com

QUOTATION

PlayPower LT Farmington, Inc.

Contact PlayPower LT Farmington at 800-325-8828

Sales Person: GUY DONAHOE Pacific Park and Play

SITE LOCATION

Quote # 2140022487 Date 4/24/2026

Version 1

BURBANK USD - McKINLEY ELEMENTARY

BURBANK, CA 915

Site Phone:

Site Fax:

attn: MALIHE SHOKOUHI

RE:: BURBANK USD - McKINLEY ELEMENTARY

BILL TO

Customer PO#

BURBANK UNIFIED SCHOOL DISTRICT
1900 OLIVE STREET

BURBANK, CA 91505
ATTN: MALIHE SHOKOUHI
Phone: (213) 718-0462 Ext.:
Fax:

QTY:	ITEM #	Description	Unit Price	Extended Price
1	LTCPS-908658BR	PLAY BUILDER BROWN VINYL DECK TO DECK STEPS FOR 36" TRANSFER STATION. NO RAILS, FOOTINGS, SNO CONE DECKS OR HARDWARE BAG INCLUDED.	$761.4600	$761.46
1	LTCPS-925601	2 - 5 AGE LABEL.	$7.9772	$7.98
1	LTCPS-999663TYW	PLAY BUILDER TROPICAL YELLOW LEFT SAFETY RAIL ONLY.	$554.6800	$554.68
1	LTCPS-999665TYW	PLAY BUILDER TROPICAL YELLOW RIGHT SAFETY RAIL ONLY.	$554.6800	$554.68
1	LTCPS-HW60791-1	HARDWARE BAG FOR PLAY BUILDER TRANSFER STATION INCLUDES 22 NUTS, 26 SCREWS, 43 WASHERS, 10 BOLTS & 11 BOWED WASHERS.	$65.6600	$65.66

PLEASE NOTE: GRAND TOTAL COST IS LISTED ON PAGE TWO

ENTER SHIP TO ADDRESS IF DIFFERENT FROM SITE ADDRESS.

SubTotal	$1,944.46
Install	$1,148.00
PBO Amount	
PBO Freight	
Freight	$407.00
TAX RATE	10.50%
TAX	$204.17
TOTAL	$3,703.63

Credit Report Required: No

Installer:	Installation Quote:
PSI	$1,148.00

Special Instructions: Terms: Net 30 days

PURCHASE ORDER INFORMATION IS ABOVE ON THE FIRST PAGE OF THE QUOTATION.

DISCOUNT IS PER SOURCEWELL / NJPA CONTRACT #101625-PLP. SOURCEWELL MEMBER #11938.

REMOVAL, DISPOSAL & INSTALLATION ARE INCLUDED IN TOTAL.

PLEASE BE ADVISED THAT IF ANY PARTS NEED TO BE RETURNED, YOU WILL NEED TO PAY FREIGHT BOTH WAYS AND THE RESTOCKING FEE.

CLIENT IS RESPONSIBLE FOR RECEIVING / OFFLOADING EQUIPMENT. CLIENT IS RESPONSIBLE FOR CHECKING FOR AND NOTING SHIPPING DAMAGE, IF ANY, WHEN RECEIVING EQUIPMENT AT DELIVERY TIME.

THANK YOU!

This Quote shall not become a binding contract until signed and delivered by both Customer and PlayPower LT Farmington Inc ("PPLT"). Sales Representative is not authorized to sign this Quote on behalf of PPLT or Customer, and signed Quotes cannot be accepted from Sales Rep.To Submit this offer, please sign below forward a complete signed copy of this Quote directly to "PPLT Sales Administrator" via fax (714) 846-3485 or email pacificdzn@aol.com. Upon acceptance, PPLT will return a fully-signed copy of the Quote to Customer with copy to Sales Representative via fax or email. THIS QUOTE IS LIMITED TO AND GOVERNED BY THE TERMS CONTAINED HEREIN. PPLT objects to any other terms proposed by Customer, in writing or otherwise, as material alterations, all such proposed terms shall be void. Customer authorizes PPLT to ship the Equipment and agrees to pay PPLTthe total amount specified. Shipping terms are FOB the place of shipment via common carrier designated by PPLT. Payment terms are Net-30 days from invoice date with approved credit all charges are due and payable in full at P.O. Box 734155, Dallas, TX 75373-4155, unless notified otherwise by PPLT in writing.Customer agrees to pay all additional service charges for pastdue invoices.Customer must provide proper tax exemption certificates to PPLT, shall promptly pay discharge all otherwise applicable taxes, license fees, levies other impositions on the Equipment at its own expense. Equipment quote valid for 15 days, freight/labor prices subject to change. Install/labor quoted is Not at prevailing wages rates unless specifically noted.....

CUSTOMER HEREBY SUBMITS ITS OFFER TO PURCHASE THE EQUIPMENT ACCORDING TO THE TERMS STATED IN THIS QUOTE AND SUBJECT TO FINAL APPROVAL BY PPLT.

_____ _____ _____

Submitted By (Signature) Printed Name and Title Date

The foregoing quote and offer are hereby approved and accepted by PPLT.

By: _____ Date _____

_____ Quote # 2140022487

PLEASE NOTE: GRAND TOTAL COST IS LISTED ON PAGE TWO

ADDITIONAL TERMS AND CONDITIONS OF SALE

1. Use and Maintenance. Customer agrees to regularly inspect and maintain the Equipment, and to provide, inspect and maintain appropriate safety surfacing under around the Equipment, in accordance with PPLT's product literature and the most current Consumer Product Safety Commission Handbook for Public Playground Safety.

2. Default, Remedies Delinquency Charges. Customer's failure to pay any invoice when due, or its failure to otherwise comply with the terms of this Quote, shall constitute a default under all unsatisfied invoices ("Event of Default"). Upon an Event of Default, PPLT shall have all remedies available to it at law or equity, including, without limitation, all remedies afforded a secured creditor under the Uniform Commercial Code. Customer agrees to assist and cooperate with PPLT to accomplish its filing and enforcement of mechanic's or other liens with respect to the Equipment or its location or its repossession of the Equipment and Customer expressly waives all rights to possess the Equipment after an Event of Default. All remedies are cumulative and not alternative, and no exercise by PPLT of a remedy will prohibit or waive the exercise of any other remedy.Customer shall pay all reasonable attorneys' fees plus any costs of collection incurred by PPLT in enforcing its rights hereunder. Subject to any limitations under law, Customer shall pay to PPLT as liquidated damages, and not as a penalty, an amount equal to 1.5% per month of any payment .that is delinquent in such month and is not received by PPLT within ten (10) days after the date on which due...

3. Limitation of Warranty/ Indemnity. PPLT MAKES NO EQUIPMENT WARRANTIES EXCEPT FOR THOSE STANDARD WARRANTIES ISSUED WITH THE EQUIPMENT, WHICH ARE INCORPORATED HEREIN BY THIS REFERENCE. PPLT SPECIFICALLY DISCLAIMS ANY IMPLIED WARRANTY OF MERCHANTABILITY OR FITNESS FOR A PARTICULAR PURPOSE AND ANY LIABILITY FOR INCIDENTAL OR CONSEQUENTIAL DAMAGES. CUSTOMER AGREES TO DEFEND, INDEMNIFY AND SAVE PPLT HARMLESS FROM ALL CLAIMS OF ANY KIND FOR DAMAGES OF ANY KIND ARISING OUT OF CUSTOMER'S ALTERATION OF THE EQUIPMENT, ITS FAILURE TO MAINTAIN THE EQUIPMENT, ITS FAILURE TO PROPERLY SUPERVISE EQUIPMENT USE, OR ITS FAILURE TO PROVIDE AND MAINTAIN APPROPRIATE TYPES AND DEPTHS OF SAFETY SURFACING BENEATH AND AROUND THE EQUIPMENT IN ACCORDANCE WITH PPLT'S INSTALLATION AND OWNER'S MANUALS AND THE MOST CURRENT CONSUMER PRODUCT SAFETY COMMISSION HANDBOOK FOR PUBLIC PLAYGROUND SAFETY.

4. Restrictions. Until all amounts due hereunder are paid in full, Customer shall not: (i) permit the Equipment to be levied upon or attached under any legal process; (ii) transfer title to the Equipment or any of Customer's rights therein; or (iii) remove or permit the removal of the Equipment to any location not specified in this Quote.

5. Purchase Money Security Interest. Customer hereby grants, pledges and assigns to PPLT, and PPLT hereby reserves a purchase money security interest in, the Equipment in order to secure the payment and performance in full of all of Customer's obligations hereunder. Customer agrees that PPLT may file one or more financing statements, in order to allow it to perfect, acquire and maintain a superior security interest in the Equipment.

6. Choice of Law and Jurisdiction. All agreements between Customer and PPLT shall be interpreted, and the parties' obligations shall be governed, by the laws of the State of Missouri without reference to its choice of law provisions. Customer hereby consents to the personal jurisdiction of the state and federal courts located in the city and county of St. Louis, Missouri.

7. Title; Risk of Loss; Insurance. PPLT Retains full title to all Equipment until full payment is received by PPLT. Customer assumes all risk of loss or destruction of or damage to the Equipment by reason of theft, fire, water, or any other cause, occurrence of any such casualty shall not relieve the Customer from its obligations hereunder and under any invoices. Until all amounts due hereunder are paid in full, Customer shall insure the Equipment against all such losses and casualties.

8. Waiver; Invalidity.PPLT may waive a default hereunder, or under any invoice or other agreement between Customer PPLT, or cure such a default at Customer's expense, but shall have no obligation to do either. No waiver shall be deemed to have taken place unless it is in writing, signed by PPLT. Any one waiver shall not constitute a waiver of other defaults or the same kind of default at another time, or a forfeiture of any rights provided to PPLT hereunder or under any invoice.The invalidity of any portion of this Quote shall not affect the force and effect of the remaining valid portions hereof.

9. Entire Agreement; Amendment; Binding Nature.This fully-executed Quote, as supplemented by Change Orders invoices containing exact amounts of estimates provided herein, constitutes the complete and exclusive agreement between the parties. A Change Order is a written instrument signed by the Customer and PPLT stating their agreement as to any amendment in the terms of this Quote. Customer acknowledges that Change Orders may result in delays and additional costs. The parties agree that all Change Orders shall include appropriate adjustments in price and time frames relating to any requested amendments Upon full execution, this Quote shall be binding upon and inure to the benefit of the parties and their successors and assigns..

10. Counterparts; Electronic Transmission. This Quote, any invoice, and any other agreement between the parties, may be executed in counterparts, each of which shall constitute an original.The facsimile or other electronic transmission of any signed original document,retransmission of any signed facsimile or other electronic transmission, shall be the same as the transmission of an original. At the request of either party, the parties will confirm facsimile or other electronically transmitted signatures by signing an original document..

Make Purchase Order/Check payable to:PlayPower LT Farmington, Inc.
c/o Pacific Park and Play 714 846-4885 fax 714 846-3485
P.O. Box 734155, Dallas, TX 75373-4155 email: pacificdzn@aol.com

QUOTATION

PlayPower LT Farmington, Inc.

Contact PlayPower LT Farmington at 800-325-8828

Sales Person: GUY DONAHOE Pacific Park and Play

SITE LOCATION

Quote # 2140022490 Date 4/24/2026

Version 1

BURBANK USD - PROVIDENCIA TRANSITIONAL KINDERGARTEN

BURBANK, CA 915

Site Phone:

Site Fax:

attn: MALIHE SHOKOUHI

RE:: BURBANK USD - PROVIDENCIA TRANSITIONAL KIND

BILL TO

Customer PO#

BURBANK UNIFIED SCHOOL DISTRICT
1900 OLIVE STREET

BURBANK, CA 91505
ATTN: MALIHE SHOKOUHI
Phone: (213) 718-0462 Ext.:
Fax:

QTY:	ITEM #	Description	Unit Price	Extended Price
1	LTCPS-2-111492	IDENTIFICATION LABEL STAMPED WITH RIVETS.	$5.5272	$5.53
1	LTCPS-2-202613	PLAY BUILDER 106" POST WITH CAP.	$230.3000	$230.30
1	LTCPS-2-202880	PLAY BUILDER BUMPY CLIMBER FOR 48" DECK. INCLUDES HARDWARE BAG.	$2,802.8001	$2,802.80
1	LTCPS-2-203924	PLAY BUILDER MINI GLIDING GEARS INSERT.	$533.1200	$533.12
1	LTCPS-2-203931	PLAY BUILDER REACH PANEL. INCLUDES HARDWARE BAG.	$549.7800	$549.78
1	LTCPS-2-54655	PLAY BUILDER VILLAGE PICKET FENCE PANEL. INCLUDES HARDWARE BAG.	$523.3200	$523.32
1	LTCPS-2-61532	PLAY BUILDER 16" INTER-DECK STEP WITH SAFETY LOOPS AND HARDWARE.	$827.1200	$827.12
1	LTCPS-2-63630	PLAY BUILDER "S" CRAWL TUNNEL WITH FLAT TOP, BELOW DECK. INCLUDES HARDWARE BAG.	$3,073.2801	$3,073.28

PLEASE NOTE: GRAND TOTAL COST IS LISTED ON PAGE TWO

1	LTCPS-902717BR	BROWN VINYL SNO CONE DECK FOR TRANSFER STATION, 11 GAUGE, LARGE HOLE. DOES NOT INCLUDE CLAMPS OR HARDWARE.	$562.5200	$562.52
1	LTCPS-925601	2 - 5 AGE LABEL.	$7.9772	$7.98
1	LTCPS-HW7704-1	HARDWARE BAG FOR CLAMP ELIMINATION.	$50.9600	$50.96
1	SPECTR-PROVIDENCIA	SPECTRATURF SAFETY PLAYGRASS, 16 SQ/FT, 3" THICK, PATCH & REPAIR OF PLAYGRASS, INCLUDES PROVISION & INSTALLATION OF SAND INFILL MATERIALS. INCLUDES MATERIAL, FREIGHT, INSTALL & SALES TAX.	$4,382.0000	$4,382.00

ENTER SHIP TO ADDRESS IF DIFFERENT FROM SITE ADDRESS.

SubTotal	$13,548.70
Install	$3,748.00
PBO Amount	
PBO Freight	
Freight	$2,272.00
TAX RATE	10.50%
TAX	$962.50
TOTAL	$20,531.21

Credit Report Required: No

Installer:	Installation Quote:
PSI	$3,748.00

Special Instructions: Terms: Net 30 days

PURCHASE ORDER INFORMATION IS ABOVE ON THE FIRST PAGE OF THE QUOTATION.

DISCOUNT IS PER SOURCEWELL / NJPA CONTRACT #101625-PLP. SOURCEWELL MEMBER #11938.

REMOVAL, DISPOSAL & INSTALLATION ARE INCLUDED IN TOTAL.

PLEASE BE ADVISED THAT IF ANY PARTS NEED TO BE RETURNED, YOU WILL NEED TO PAY FREIGHT BOTH WAYS AND THE RESTOCKING FEE.

CLIENT IS RESPONSIBLE FOR RECEIVING / OFFLOADING EQUIPMENT. CLIENT IS RESPONSIBLE FOR CHECKING FOR AND NOTING SHIPPING DAMAGE, IF ANY, WHEN RECEIVING EQUIPMENT AT DELIVERY TIME.

THANK YOU!

This Quote shall not become a binding contract until signed and delivered by both Customer and PlayPower LT Farmington Inc ("PPLT"). Sales Representative is not authorized to sign this Quote on behalf of PPLT or Customer, and signed Quotes cannot be accepted from Sales Rep.To Submit this offer, please sign below forward a complete signed copy of this Quote directly to "PPLT Sales Administrator" via fax (714) 846-3485 or email pacificdzn@aol.com. Upon acceptance, PPLT will return a fully-signed copy of the Quote to Customer with copy to Sales Representative via fax or email. THIS QUOTE IS LIMITED TO AND GOVERNED BY THE TERMS CONTAINED HEREIN. PPLT objects to any other terms proposed by Customer, in writing or otherwise, as material alterations, all such proposed terms shall be void. Customer authorizes PPLT to ship the Equipment and agrees to pay PPLTthe total amount specified. Shipping terms are FOB the place of shipment via common carrier designated by PPLT. Payment terms are Net-30 days from invoice date with approved credit all charges are due and payable in full at P.O. Box 734155, Dallas, TX 75373-4155, unless notified otherwise by PPLT in writing.Customer agrees to pay all additional service charges for pastdue invoices.Customer must provide proper tax exemption certificates to PPLT, shall promptly pay discharge all otherwise applicable taxes, license fees, levies other impositions on the Equipment at its own expense. Equipment quote valid for 15 days, freight/labor prices subject to change. Install/labor quoted is Not at prevailing wages rates unless specifically noted.....

CUSTOMER HEREBY SUBMITS ITS OFFER TO PURCHASE THE EQUIPMENT ACCORDING TO THE TERMS STATED IN THIS QUOTE AND SUBJECT TO FINAL APPROVAL BY PPLT.

_____ _____ _____

Submitted By (Signature) Printed Name and Title Date

The foregoing quote and offer are hereby approved and accepted by PPLT.

By: _____ Date _____

_____ Quote # 2140022490

PLEASE NOTE: GRAND TOTAL COST IS LISTED ON PAGE TWO

ADDITIONAL TERMS AND CONDITIONS OF SALE

1. Use and Maintenance. Customer agrees to regularly inspect and maintain the Equipment, and to provide, inspect and maintain appropriate safety surfacing under around the Equipment, in accordance with PPLT's product literature and the most current Consumer Product Safety Commission Handbook for Public Playground Safety.

2. Default, Remedies Delinquency Charges. Customer's failure to pay any invoice when due, or its failure to otherwise comply with the terms of this Quote, shall constitute a default under all unsatisfied invoices ("Event of Default"). Upon an Event of Default, PPLT shall have all remedies available to it at law or equity, including, without limitation, all remedies afforded a secured creditor under the Uniform Commercial Code. Customer agrees to assist and cooperate with PPLT to accomplish its filing and enforcement of mechanic's or other liens with respect to the Equipment or its location or its repossession of the Equipment and Customer expressly waives all rights to possess the Equipment after an Event of Default. All remedies are cumulative and not alternative, and no exercise by PPLT of a remedy will prohibit or waive the exercise of any other remedy.Customer shall pay all reasonable attorneys' fees plus any costs of collection incurred by PPLT in enforcing its rights hereunder. Subject to any limitations under law, Customer shall pay to PPLT as liquidated damages, and not as a penalty, an amount equal to 1.5% per month of any payment .that is delinquent in such month and is not received by PPLT within ten (10) days after the date on which due...

3. Limitation of Warranty/ Indemnity. PPLT MAKES NO EQUIPMENT WARRANTIES EXCEPT FOR THOSE STANDARD WARRANTIES ISSUED WITH THE EQUIPMENT, WHICH ARE INCORPORATED HEREIN BY THIS REFERENCE. PPLT SPECIFICALLY DISCLAIMS ANY IMPLIED WARRANTY OF MERCHANTABILITY OR FITNESS FOR A PARTICULAR PURPOSE AND ANY LIABILITY FOR INCIDENTAL OR CONSEQUENTIAL DAMAGES. CUSTOMER AGREES TO DEFEND, INDEMNIFY AND SAVE PPLT HARMLESS FROM ALL CLAIMS OF ANY KIND FOR DAMAGES OF ANY KIND ARISING OUT OF CUSTOMER'S ALTERATION OF THE EQUIPMENT, ITS FAILURE TO MAINTAIN THE EQUIPMENT, ITS FAILURE TO PROPERLY SUPERVISE EQUIPMENT USE, OR ITS FAILURE TO PROVIDE AND MAINTAIN APPROPRIATE TYPES AND DEPTHS OF SAFETY SURFACING BENEATH AND AROUND THE EQUIPMENT IN ACCORDANCE WITH PPLT'S INSTALLATION AND OWNER'S MANUALS AND THE MOST CURRENT CONSUMER PRODUCT SAFETY COMMISSION HANDBOOK FOR PUBLIC PLAYGROUND SAFETY.

4. Restrictions. Until all amounts due hereunder are paid in full, Customer shall not: (i) permit the Equipment to be levied upon or attached under any legal process; (ii) transfer title to the Equipment or any of Customer's rights therein; or (iii) remove or permit the removal of the Equipment to any location not specified in this Quote.

5. Purchase Money Security Interest. Customer hereby grants, pledges and assigns to PPLT, and PPLT hereby reserves a purchase money security interest in, the Equipment in order to secure the payment and performance in full of all of Customer's obligations hereunder. Customer agrees that PPLT may file one or more financing statements, in order to allow it to perfect, acquire and maintain a superior security interest in the Equipment.

6. Choice of Law and Jurisdiction. All agreements between Customer and PPLT shall be interpreted, and the parties' obligations shall be governed, by the laws of the State of Missouri without reference to its choice of law provisions. Customer hereby consents to the personal jurisdiction of the state and federal courts located in the city and county of St. Louis, Missouri.

7. Title; Risk of Loss; Insurance. PPLT Retains full title to all Equipment until full payment is received by PPLT. Customer assumes all risk of loss or destruction of or damage to the Equipment by reason of theft, fire, water, or any other cause, occurrence of any such casualty shall not relieve the Customer from its obligations hereunder and under any invoices. Until all amounts due hereunder are paid in full, Customer shall insure the Equipment against all such losses and casualties.

8. Waiver; Invalidity.PPLT may waive a default hereunder, or under any invoice or other agreement between Customer PPLT, or cure such a default at Customer's expense, but shall have no obligation to do either. No waiver shall be deemed to have taken place unless it is in writing, signed by PPLT. Any one waiver shall not constitute a waiver of other defaults or the same kind of default at another time, or a forfeiture of any rights provided to PPLT hereunder or under any invoice.The invalidity of any portion of this Quote shall not affect the force and effect of the remaining valid portions hereof.

9. Entire Agreement; Amendment; Binding Nature.This fully-executed Quote, as supplemented by Change Orders invoices containing exact amounts of estimates provided herein, constitutes the complete and exclusive agreement between the parties. A Change Order is a written instrument signed by the Customer and PPLT stating their agreement as to any amendment in the terms of this Quote. Customer acknowledges that Change Orders may result in delays and additional costs. The parties agree that all Change Orders shall include appropriate adjustments in price and time frames relating to any requested amendments Upon full execution, this Quote shall be binding upon and inure to the benefit of the parties and their successors and assigns..

10. Counterparts; Electronic Transmission. This Quote, any invoice, and any other agreement between the parties, may be executed in counterparts, each of which shall constitute an original.The facsimile or other electronic transmission of any signed original document,retransmission of any signed facsimile or other electronic transmission, shall be the same as the transmission of an original. At the request of either party, the parties will confirm facsimile or other electronically transmitted signatures by signing an original document..

GENERAL NOTES

AGE GROUP

☑ 2-5YRS ☐ 5-12YRS ☐ 2-12YRS ☐ 13YRS

1. THE AMERICANS WITH DISABILITIES ACT (ADA) MAY REQUIRE THAT YOU MAKE YOUR PARK AND/OR PLAYGROUND ACCESSIBLE WHEN VIEWED IN ITS ENTIRETY. PLEASE CONSULT YOUR LEGAL COUNSEL TO DETERMINE IF THE ADA APPLIES TO YOU.
2. FOR PLAYGROUND EQUIPMENT TO BE CONSIDERED ACCESSIBLE ACCESSIBLE SURFACING MUST BE UTILIZED IN APPLICABLE AREAS.
3. ALTHOUGH A PARTICULAR PLAYGROUND DESIGN MY NOT MEET THE PROPOSED ACCESS BOARD REGULATIONS IN REGARDS TO THE APPROPRIATE NUMBER OF GROUND LEVEL EVENTS THE ACTUAL PLAYGROUND MAY BE IN COMPLIANCE WHEN CONSIDERING EXISTING PLAY COMPONENTS.
4. ALL DECK HEIGHTS ARE MEASURED FROM TOP OF GROUND COVER.
5. FALL ABSORBING GROUND COVER IS REQUIRED UNDER AND AROUND ALL PLAY EQUIPMENT.
6. THE MINIMUM RECOMMENDED FALL ZONE AROUND THE ENTIRE PLAYSTRUCTURE IS SHOWN. THIS ZONE IS TO BE FREE OF ALL TRIPPING OR COLLISION HAZARDS (I.E. ROOTS ROCKS BORDER MATERIAL ETC.).
7. ALL POST LENGTHS ARE IDENTIFIED BY TEXT SHOWING THE POST LENGTHS I.E. 96 REPRESENTS A 96 INCH POST.
8. NOT ALL EQUIPMENT MAY BE APPROPRIATE FOR ALL CHILDREN. SUPERVISION IS REQUIRED.

AGE GROUP:	2-5_ASTM			
ELEVATED PLAY ACTIVITIES - TOTAL:	16			
ELEVATED PLAY ACTIVITIES ACCESIBLE BY TRANSFER:	15	REQ'D	8	
ELEVATED PLAY ACTIVITIES ACCESIBLE BY RAMP:	0	REQ'D	0	
GROUND LEVEL ACTIVITY TYPE:	5	REQ'D	3	
GROUND LEVEL QUANTITY:	9	REQ'D	5	

1) Replace 16" transfer tri-deck
2) Remove Sliding Pole, Replace with Bumpy Climber
3) Remove 16" deck and Challenge Ladder
4) Replace with Picket Fence & "S" Crawl Tunnel
5) Move turn bar to top and add post
6) Add Reach Mini Insert Gear Panel where Turn Bar was
7) Add interdeck step between 48" and 64" for 2-5 compliance

.

Colors: Brown Vinyl, Blue Posts, Tropical Yellow Accents, Blue "S" Crawl, Red/Yellow Panel, Tropical Yellow Village Panels

little tikes COMMERCIAL

SGL PLASTIC WAVE SLIDE 200064813

ARCHED BRIDGE W/SAFETY RAILS 200058751

BUMPY CLIMBER 200202880

DBL WIDE PLASTIC SLIDE 200200330

ELBOW SLIDE 200064815

VILLAGE SEAT PANEL 200054654

CHAIN NET CLIMBER 200084311

VILLAGE COUNTER PANEL 200054653

TRANSFER STATION 200200432

QUAD ROOF 200060686

INTER-DECK STEP (16") W/SAFETY LOOPS 200061532

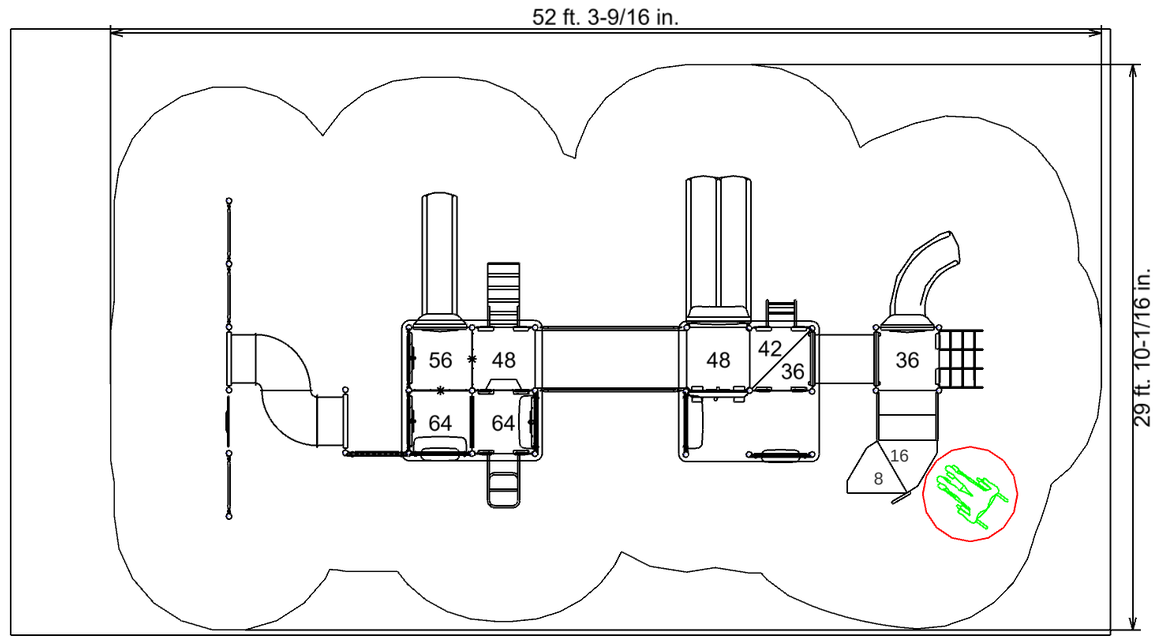

RUNG LADDER 200201022

TURNING BAR 200060513

TURNING BAR 200060513

CRAWL TUNNEL 200063639

VILLAGE COUNTER PANEL 200054653

QUAD ROOF 200060686

2' 8'
1' 4' 16'

VILLAGE PICKET FENCE PANEL 200054655

SEVEN STATION PLAY FACTORY 200065770

S CRAWL TUNNEL 200063630

TURNING BAR 200060513

REACH PANEL MINI INSERT F/PB 200203931

MINI GLIDING GEARS INSERT 200203924

LOOP CLIMBER 200061706

SAFETY RAIL W/WHEEL 200054616

SAFETY RAIL W/WHEEL 200054616

VILLAGE SEAT PANEL 200054654

PROJECT:
ProjectDescription
Burbank USD - Providencia ES TK

LTCPS REP:
Guy Donahoe
GUY DONAHOE
714 846-4885

GROUND SPACE: 40'-6" x 18'-6"
PROTECTIVE AREA: 52'-6" x 30'

DRAWN BY: Guy Donahoe
DATE: 04/17/2026
PROJECT: 26007492

LTCPS - FARMINGTON
878 EAST HIGHWAY 60
MONETT MO 65708
VOICE: 1-800-325-8828
FAX: 417-354-2273

PLAYGROUND LAYOUT COMPLIANCE:

☑ THIS PLAYGROUND DESIGN MEETS THE FINAL ACCESS BOARD REGULATION.

Make Purchase Order/Check payable to:PlayPower LT Farmington, Inc.
c/o Pacific Park and Play 714 846-4885 fax 714 846-3485
P.O. Box 734155, Dallas, TX 75373-4155 email: pacificdzn@aol.com

QUOTATION

PlayPower LT Farmington, Inc.

Contact PlayPower LT Farmington at 800-325-8828

Sales Person: GUY DONAHOE Pacific Park and Play

SITE LOCATION

Quote # 2140022486 Date 4/24/2026

Version 1

BURBANK USD - WASHINGTON ELEMENTARY

BURBANK, CA 915

Site Phone:

Site Fax:

attn: MALIHE SHOKOUHI

RE:: BURBANK USD - WASHINGTON ELEMENTARY

BILL TO

Customer PO#

BURBANK UNIFIED SCHOOL DISTRICT
1900 OLIVE STREET

BURBANK, CA 91505
ATTN: MALIHE SHOKOUHI
Phone: (213) 718-0462 Ext.:
Fax:

QTY:	ITEM #	Description	Unit Price	Extended Price
1	LTCPS-2-07034	KID BUILDER STEP LADDER FOR 64" DECK, LARGE HOLE. INCLUDES CLAMPS, HARDWARE BAG, ENCLOSURES AND RAILS.	$2,510.7600	$2,510.76
1	LTCPS-2-111492	IDENTIFICATION LABEL STAMPED WITH RIVETS.	$5.5272	$5.53
1	LTCPS-925601	2 - 5 AGE LABEL.	$7.9772	$7.98
1	SPECTR-WASHINGTON	SPECTRATURF SAFETY PLAYGRASS, 12 SQ/FT, 3" THICK, PATCH & REPAIR OF PLAYGRASS, INCLUDES PROVISION & INSTALLATION OF SAND INFILL MATERIALS.	$4,344.0000	$4,344.00

PLEASE NOTE: GRAND TOTAL COST IS LISTED ON PAGE TWO

ENTER SHIP TO ADDRESS IF DIFFERENT FROM SITE ADDRESS.

SubTotal	$6,868.26
Install	$1,148.00
PBO Amount	
PBO Freight	
Freight	$544.00
TAX RATE	10.50%
TAX	$265.05
TOTAL	$8,825.31

Credit Report Required: No

Installer:	Installation Quote:
PSI	$1,148.00

Special Instructions: Terms: Net 30 days

PURCHASE ORDER INFORMATION IS ABOVE ON THE FIRST PAGE OF THE QUOTATION.

DISCOUNT IS PER SOURCEWELL / NJPA CONTRACT #101625-PLP. SOURCEWELL MEMBER #11938.

REMOVAL, DISPOSAL AND INSTALLATION ARE INCLUDED IN TOTAL.

PLEASE BE ADVISED THAT IF ANY PARTS NEED TO BE RETURNED, YOU WILL NEED TO PAY FREIGHT BOTH WAYS AND THE RESTOCKING FEE.

CLIENT IS RESPONSIBLE FOR RECEIVING / OFFLOADING EQUIPMENT. CLIENT IS RESPONSIBLE FOR CHECKING FOR AND NOTING SHIPPING DAMAGE, IF ANY, WHEN RECEIVING EQUIPMENT AT DELIVERY TIME.

THANK YOU!

This Quote shall not become a binding contract until signed and delivered by both Customer and PlayPower LT Farmington Inc ("PPLT"). Sales Representative is not authorized to sign this Quote on behalf of PPLT or Customer, and signed Quotes cannot be accepted from Sales Rep.To Submit this offer, please sign below forward a complete signed copy of this Quote directly to "PPLT Sales Administrator" via fax (714) 846-3485 or email pacificdzn@aol.com. Upon acceptance, PPLT will return a fully-signed copy of the Quote to Customer with copy to Sales Representative via fax or email. THIS QUOTE IS LIMITED TO AND GOVERNED BY THE TERMS CONTAINED HEREIN. PPLT objects to any other terms proposed by Customer, in writing or otherwise, as material alterations, all such proposed terms shall be void. Customer authorizes PPLT to ship the Equipment and agrees to pay PPLTthe total amount specified. Shipping terms are FOB the place of shipment via common carrier designated by PPLT. Payment terms are Net-30 days from invoice date with approved credit all charges are due and payable in full at P.O. Box 734155, Dallas, TX 75373-4155, unless notified otherwise by PPLT in writing.Customer agrees to pay all additional service charges for pastdue invoices.Customer must provide proper tax exemption certificates to PPLT, shall promptly pay discharge all otherwise applicable taxes, license fees, levies other impositions on the Equipment at its own expense. Equipment quote valid for 15 days, freight/labor prices subject to change. Install/labor quoted is Not at prevailing wages rates unless specifically noted.....

CUSTOMER HEREBY SUBMITS ITS OFFER TO PURCHASE THE EQUIPMENT ACCORDING TO THE TERMS STATED IN THIS QUOTE AND SUBJECT TO FINAL APPROVAL BY PPLT.

_____ _____ _____

Submitted By (Signature) Printed Name and Title Date

The foregoing quote and offer are hereby approved and accepted by PPLT.

By: _____ Date _____

_____ Quote # 2140022486

PLEASE NOTE: GRAND TOTAL COST IS LISTED ON PAGE TWO

ADDITIONAL TERMS AND CONDITIONS OF SALE

1. Use and Maintenance. Customer agrees to regularly inspect and maintain the Equipment, and to provide, inspect and maintain appropriate safety surfacing under around the Equipment, in accordance with PPLT's product literature and the most current Consumer Product Safety Commission Handbook for Public Playground Safety.

2. Default, Remedies Delinquency Charges. Customer's failure to pay any invoice when due, or its failure to otherwise comply with the terms of this Quote, shall constitute a default under all unsatisfied invoices ("Event of Default"). Upon an Event of Default, PPLT shall have all remedies available to it at law or equity, including, without limitation, all remedies afforded a secured creditor under the Uniform Commercial Code. Customer agrees to assist and cooperate with PPLT to accomplish its filing and enforcement of mechanic's or other liens with respect to the Equipment or its location or its repossession of the Equipment and Customer expressly waives all rights to possess the Equipment after an Event of Default. All remedies are cumulative and not alternative, and no exercise by PPLT of a remedy will prohibit or waive the exercise of any other remedy.Customer shall pay all reasonable attorneys' fees plus any costs of collection incurred by PPLT in enforcing its rights hereunder. Subject to any limitations under law, Customer shall pay to PPLT as liquidated damages, and not as a penalty, an amount equal to 1.5% per month of any payment .that is delinquent in such month and is not received by PPLT within ten (10) days after the date on which due...

3. Limitation of Warranty/ Indemnity. PPLT MAKES NO EQUIPMENT WARRANTIES EXCEPT FOR THOSE STANDARD WARRANTIES ISSUED WITH THE EQUIPMENT, WHICH ARE INCORPORATED HEREIN BY THIS REFERENCE. PPLT SPECIFICALLY DISCLAIMS ANY IMPLIED WARRANTY OF MERCHANTABILITY OR FITNESS FOR A PARTICULAR PURPOSE AND ANY LIABILITY FOR INCIDENTAL OR CONSEQUENTIAL DAMAGES. CUSTOMER AGREES TO DEFEND, INDEMNIFY AND SAVE PPLT HARMLESS FROM ALL CLAIMS OF ANY KIND FOR DAMAGES OF ANY KIND ARISING OUT OF CUSTOMER'S ALTERATION OF THE EQUIPMENT, ITS FAILURE TO MAINTAIN THE EQUIPMENT, ITS FAILURE TO PROPERLY SUPERVISE EQUIPMENT USE, OR ITS FAILURE TO PROVIDE AND MAINTAIN APPROPRIATE TYPES AND DEPTHS OF SAFETY SURFACING BENEATH AND AROUND THE EQUIPMENT IN ACCORDANCE WITH PPLT'S INSTALLATION AND OWNER'S MANUALS AND THE MOST CURRENT CONSUMER PRODUCT SAFETY COMMISSION HANDBOOK FOR PUBLIC PLAYGROUND SAFETY.

4. Restrictions. Until all amounts due hereunder are paid in full, Customer shall not: (i) permit the Equipment to be levied upon or attached under any legal process; (ii) transfer title to the Equipment or any of Customer's rights therein; or (iii) remove or permit the removal of the Equipment to any location not specified in this Quote.

5. Purchase Money Security Interest. Customer hereby grants, pledges and assigns to PPLT, and PPLT hereby reserves a purchase money security interest in, the Equipment in order to secure the payment and performance in full of all of Customer's obligations hereunder. Customer agrees that PPLT may file one or more financing statements, in order to allow it to perfect, acquire and maintain a superior security interest in the Equipment.

6. Choice of Law and Jurisdiction. All agreements between Customer and PPLT shall be interpreted, and the parties' obligations shall be governed, by the laws of the State of Missouri without reference to its choice of law provisions. Customer hereby consents to the personal jurisdiction of the state and federal courts located in the city and county of St. Louis, Missouri.

7. Title; Risk of Loss; Insurance. PPLT Retains full title to all Equipment until full payment is received by PPLT. Customer assumes all risk of loss or destruction of or damage to the Equipment by reason of theft, fire, water, or any other cause, occurrence of any such casualty shall not relieve the Customer from its obligations hereunder and under any invoices. Until all amounts due hereunder are paid in full, Customer shall insure the Equipment against all such losses and casualties.

8. Waiver; Invalidity.PPLT may waive a default hereunder, or under any invoice or other agreement between Customer PPLT, or cure such a default at Customer's expense, but shall have no obligation to do either. No waiver shall be deemed to have taken place unless it is in writing, signed by PPLT. Any one waiver shall not constitute a waiver of other defaults or the same kind of default at another time, or a forfeiture of any rights provided to PPLT hereunder or under any invoice.The invalidity of any portion of this Quote shall not affect the force and effect of the remaining valid portions hereof.

9. Entire Agreement; Amendment; Binding Nature.This fully-executed Quote, as supplemented by Change Orders invoices containing exact amounts of estimates provided herein, constitutes the complete and exclusive agreement between the parties. A Change Order is a written instrument signed by the Customer and PPLT stating their agreement as to any amendment in the terms of this Quote. Customer acknowledges that Change Orders may result in delays and additional costs. The parties agree that all Change Orders shall include appropriate adjustments in price and time frames relating to any requested amendments Upon full execution, this Quote shall be binding upon and inure to the benefit of the parties and their successors and assigns..

10. Counterparts; Electronic Transmission. This Quote, any invoice, and any other agreement between the parties, may be executed in counterparts, each of which shall constitute an original.The facsimile or other electronic transmission of any signed original document,retransmission of any signed facsimile or other electronic transmission, shall be the same as the transmission of an original. At the request of either party, the parties will confirm facsimile or other electronically transmitted signatures by signing an original document..

PLEASE NOTE: GRAND TOTAL COST IS LISTED ON PAGE TWO

Make Purchase Order/Check payable to:PlayPower LT Farmington, Inc.
c/o Pacific Park and Play 714 846-4885 fax 714 846-3485
P.O. Box 734155, Dallas, TX 75373-4155 email: pacificdzn@aol.com

QUOTATION

PlayPower LT Farmington, Inc.

Contact PlayPower LT Farmington at 800-325-8828

Sales Person: GUY DONAHOE Pacific Park and Play

SITE LOCATION

Quote # 2140022491 Date 4/24/2026

Version 1

BURBANK USD - ROOSEVELT TRANSITIONAL KINDERGARTEN AREA 1 & 2

BURBANK, CA 915

Site Phone:

Site Fax:

attn: MALIHE SHOKOUHI

RE:: BURBANK USD - ROOSEVELT TRANSITIONAL KINDE

BILL TO

Customer PO#

BURBANK UNIFIED SCHOOL DISTRICT
1900 OLIVE STREET

BURBANK, CA 91505
ATTN: MALIHE SHOKOUHI
Phone: (213) 718-0462 Ext.:
Fax:

QTY:	ITEM #	Description	Unit Price	Extended Price
1	LTCPS-1-05100	PLAY BUILDER BROWN 8" DECK-TO-DECK PANEL. INCLUDES HARDWARE. FOR AREA 2	$207.7600	$207.76
2	LTCPS-1-05350	PLAY BUILDER HALF SQUARE DECK. INCLUDES HARDWARE BAG. AREA 2	$868.2800	$1,736.56
2	LTCPS-2-111492	IDENTIFICATION LABEL STAMPED WITH RIVETS. AREA 1 & 2	$5.5272	$11.05
1	LTCPS-2-200196	PLAY BUILDER 8" DECK TO DECK PANEL WITH FACES (ACCENT COLOR). INCLUDES HARDWARE. AREA 2	$184.2400	$184.24
1	LTCPS-2-200202	PLAY BUILDER 8" LONG DECK TO DECK PANEL FOR SPLIT DECK (ACCENT COLOR). INCLUDES HARDWARE. AREA 2	$240.1000	$240.10
1	LTCPS-2-200767	PLAY BUILDER TRANSFER STATION WITH STEP, HAND GRIPS, FOOTINGS AND HARDWARE. AREA 2	$2,188.3400	$2,188.34
1	LTCPS-2-202438	PLAY BUILDER VERTICAL POD CLIMBER FOR 48" DECK HEIGHT. INCLUDES ENCLOSURE, PODS, CAPS & HARDWARE. AREA 2	$2,044.2800	$2,044.28

PLEASE NOTE: GRAND TOTAL COST IS LISTED ON PAGE TWO

1	LTCPS-2-202611	PLAY BUILDER POST WITH CAP, 90". AREA 2	$194.0400	$194.04
1	LTCPS-2-203578	PLAY BUILDER STEERING WHEEL , PLASTIC, POST MOUNT. INCLUDES HARDWARE. AREA 1	$330.2600	$330.26
1	LTCPS-2-203883	PLAY BUILDER MELODY WHEEL. INCLUDES HARDWARE. AREA 1	$879.0600	$879.06
1	LTCPS-2-54576	PLAY BUILDER RUNG LADDER FOR 36" DECK WITH SAFETY LOOPS AND HARDWARE. AREA 1	$810.4600	$810.46
1	LTCPS-2-54578	PLAY BUILDER RUNG LADDER FOR 48" DECK WITH SAFETY LOOPS. INCLUDES HARDWARE. AREA 2	$865.3400	$865.34
1	LTCPS-2-54590	PLAY BUILDER POMMEL CLIMBER FOR 48" DECK WITH HARDWARE BAG. AREA 1	$2,232.4400	$2,232.44
1	LTCPS-2-54618	PLAY BUILDER LONG SAFETY RAIL WITHOUT WHEEL PLATE, DECK MOUNT. INCLUDES HARDWARE. AREA 2	$502.7400	$502.74
1	LTCPS-2-59831	PLAY BUILDER LADDER PANEL, BELOW DECK, 24" WITH SAFETY LOOPS AND HARDWARE. AREA 2	$797.7200	$797.72
2	LTCPS-925601	2 - 5 AGE LABEL. AREA 1 & 2	$7.9772	$15.95
1	SPECTR-ROOSEVELT	SPECTRATURF SAFETY PLAYGRASS, 22 SQ/FT, 3" THICK, PATCH & REPAIR OF PLAYGRASS, INCLUDES PROVISION & INSTALLATION OF SAND INFILL MATERIALS. ONE AREA HAS 10 SQ/FT & ONE AREA HAS 12 SQ/FT. INCLUDES MATERIAL, FREIGHT, INSTALL & SALES TAX.	$4,419.0000	$4,419.00

PLEASE NOTE: GRAND TOTAL COST IS LISTED ON PAGE TWO

ENTER SHIP TO ADDRESS IF DIFFERENT FROM SITE ADDRESS.

SubTotal	$17,659.35
Install	$6,077.00
PBO Amount	
PBO Freight	
Freight	$5,597.00
TAX RATE	10.50%
TAX	$1,390.24
TOTAL	$30,723.59

Credit Report Required: No

Installer:	Installation Quote:
PSI	$6,077.00

Special Instructions: Terms: Net 30 days

PURCHASE ORDER INFORMATION IS ABOVE ON THE FIRST PAGE OF THE QUOTATION.

DISCOUNT IS PER SOURCEWELL / NJPA CONTRACT #101625-PLP. SOURCEWELL MEMBER #11938.

REMOVAL, DISPOSAL & INSTALLATION ARE INCLUDED IN TOTAL.
INSTALL FOR AREA 1 - $2,093.00
INSTALL FOR AREA 2 - $3,984.00

PLEASE BE ADVISED THAT IF ANY PARTS NEED TO BE RETURNED, YOU WILL NEED TO PAY FREIGHT BOTH WAYS AND THE RESTOCKING FEE.

CLIENT IS RESPONSIBLE FOR RECEIVING / OFFLOADING EQUIPMENT. CLIENT IS RESPONSIBLE FOR CHECKING FOR AND NOTING SHIPPING DAMAGE, IF ANY, WHEN RECEIVING EQUIPMENT AT DELIVERY TIME.

THANK YOU!

This Quote shall not become a binding contract until signed and delivered by both Customer and PlayPower LT Farmington Inc ("PPLT"). Sales Representative is not authorized to sign this Quote on behalf of PPLT or Customer, and signed Quotes cannot be accepted from Sales Rep.To Submit this offer, please sign below forward a complete signed copy of this Quote directly to "PPLT Sales Administrator" via fax (714) 846-3485 or email pacificdzn@aol.com. Upon acceptance, PPLT will return a fully-signed copy of the Quote to Customer with copy to Sales Representative via fax or email. THIS QUOTE IS LIMITED TO AND GOVERNED BY THE TERMS CONTAINED HEREIN. PPLT objects to any other terms proposed by Customer, in writing or otherwise, as material alterations, all such proposed terms shall be void. Customer authorizes PPLT to ship the Equipment and agrees to pay PPLTthe total amount specified. Shipping terms are FOB the place of shipment via common carrier designated by PPLT. Payment terms are Net-30 days from invoice date with approved credit all charges are due and payable in full at P.O. Box 734155, Dallas, TX 75373-4155, unless notified otherwise by PPLT in writing.Customer agrees to pay all additional service charges for pastdue invoices.Customer must provide proper tax exemption certificates to PPLT, shall promptly pay discharge all otherwise applicable taxes, license fees, levies other impositions on the Equipment at its own expense. Equipment quote valid for 15 days, freight/labor prices subject to change. Install/labor quoted is Not at prevailing wages rates unless specifically noted.....

CUSTOMER HEREBY SUBMITS ITS OFFER TO PURCHASE THE EQUIPMENT ACCORDING TO THE TERMS STATED IN THIS QUOTE AND SUBJECT TO FINAL APPROVAL BY PPLT.

_____ _____ _____

Submitted By (Signature) Printed Name and Title Date

The foregoing quote and offer are hereby approved and accepted by PPLT.

By: _____ Date _____

_____ Quote # 2140022491

PLEASE NOTE: GRAND TOTAL COST IS LISTED ON PAGE TWO

ADDITIONAL TERMS AND CONDITIONS OF SALE

1. Use and Maintenance. Customer agrees to regularly inspect and maintain the Equipment, and to provide, inspect and maintain appropriate safety surfacing under around the Equipment, in accordance with PPLT's product literature and the most current Consumer Product Safety Commission Handbook for Public Playground Safety.

2. Default, Remedies Delinquency Charges. Customer's failure to pay any invoice when due, or its failure to otherwise comply with the terms of this Quote, shall constitute a default under all unsatisfied invoices ("Event of Default"). Upon an Event of Default, PPLT shall have all remedies available to it at law or equity, including, without limitation, all remedies afforded a secured creditor under the Uniform Commercial Code. Customer agrees to assist and cooperate with PPLT to accomplish its filing and enforcement of mechanic's or other liens with respect to the Equipment or its location or its repossession of the Equipment and Customer expressly waives all rights to possess the Equipment after an Event of Default. All remedies are cumulative and not alternative, and no exercise by PPLT of a remedy will prohibit or waive the exercise of any other remedy.Customer shall pay all reasonable attorneys' fees plus any costs of collection incurred by PPLT in enforcing its rights hereunder. Subject to any limitations under law, Customer shall pay to PPLT as liquidated damages, and not as a penalty, an amount equal to 1.5% per month of any payment .that is delinquent in such month and is not received by PPLT within ten (10) days after the date on which due...

3. Limitation of Warranty/ Indemnity. PPLT MAKES NO EQUIPMENT WARRANTIES EXCEPT FOR THOSE STANDARD WARRANTIES ISSUED WITH THE EQUIPMENT, WHICH ARE INCORPORATED HEREIN BY THIS REFERENCE. PPLT SPECIFICALLY DISCLAIMS ANY IMPLIED WARRANTY OF MERCHANTABILITY OR FITNESS FOR A PARTICULAR PURPOSE AND ANY LIABILITY FOR INCIDENTAL OR CONSEQUENTIAL DAMAGES. CUSTOMER AGREES TO DEFEND, INDEMNIFY AND SAVE PPLT HARMLESS FROM ALL CLAIMS OF ANY KIND FOR DAMAGES OF ANY KIND ARISING OUT OF CUSTOMER'S ALTERATION OF THE EQUIPMENT, ITS FAILURE TO MAINTAIN THE EQUIPMENT, ITS FAILURE TO PROPERLY SUPERVISE EQUIPMENT USE, OR ITS FAILURE TO PROVIDE AND MAINTAIN APPROPRIATE TYPES AND DEPTHS OF SAFETY SURFACING BENEATH AND AROUND THE EQUIPMENT IN ACCORDANCE WITH PPLT'S INSTALLATION AND OWNER'S MANUALS AND THE MOST CURRENT CONSUMER PRODUCT SAFETY COMMISSION HANDBOOK FOR PUBLIC PLAYGROUND SAFETY.

4. Restrictions. Until all amounts due hereunder are paid in full, Customer shall not: (i) permit the Equipment to be levied upon or attached under any legal process; (ii) transfer title to the Equipment or any of Customer's rights therein; or (iii) remove or permit the removal of the Equipment to any location not specified in this Quote.

5. Purchase Money Security Interest. Customer hereby grants, pledges and assigns to PPLT, and PPLT hereby reserves a purchase money security interest in, the Equipment in order to secure the payment and performance in full of all of Customer's obligations hereunder. Customer agrees that PPLT may file one or more financing statements, in order to allow it to perfect, acquire and maintain a superior security interest in the Equipment.

6. Choice of Law and Jurisdiction. All agreements between Customer and PPLT shall be interpreted, and the parties' obligations shall be governed, by the laws of the State of Missouri without reference to its choice of law provisions. Customer hereby consents to the personal jurisdiction of the state and federal courts located in the city and county of St. Louis, Missouri.

7. Title; Risk of Loss; Insurance. PPLT Retains full title to all Equipment until full payment is received by PPLT. Customer assumes all risk of loss or destruction of or damage to the Equipment by reason of theft, fire, water, or any other cause, occurrence of any such casualty shall not relieve the Customer from its obligations hereunder and under any invoices. Until all amounts due hereunder are paid in full, Customer shall insure the Equipment against all such losses and casualties.

8. Waiver; Invalidity.PPLT may waive a default hereunder, or under any invoice or other agreement between Customer PPLT, or cure such a default at Customer's expense, but shall have no obligation to do either. No waiver shall be deemed to have taken place unless it is in writing, signed by PPLT. Any one waiver shall not constitute a waiver of other defaults or the same kind of default at another time, or a forfeiture of any rights provided to PPLT hereunder or under any invoice.The invalidity of any portion of this Quote shall not affect the force and effect of the remaining valid portions hereof.

9. Entire Agreement; Amendment; Binding Nature.This fully-executed Quote, as supplemented by Change Orders invoices containing exact amounts of estimates provided herein, constitutes the complete and exclusive agreement between the parties. A Change Order is a written instrument signed by the Customer and PPLT stating their agreement as to any amendment in the terms of this Quote. Customer acknowledges that Change Orders may result in delays and additional costs. The parties agree that all Change Orders shall include appropriate adjustments in price and time frames relating to any requested amendments Upon full execution, this Quote shall be binding upon and inure to the benefit of the parties and their successors and assigns..

10. Counterparts; Electronic Transmission. This Quote, any invoice, and any other agreement between the parties, may be executed in counterparts, each of which shall constitute an original.The facsimile or other electronic transmission of any signed original document,retransmission of any signed facsimile or other electronic transmission, shall be the same as the transmission of an original. At the request of either party, the parties will confirm facsimile or other electronically transmitted signatures by signing an original document..

GENERAL NOTES

AGE GROUP

☑ 2-5YRS ☐ 5-12YRS ☐ 2-12YRS ☐ 13YRS

1. THE AMERICANS WITH DISABILITIES ACT (ADA) MAY REQUIRE THAT YOU MAKE YOUR PARK AND/OR PLAYGROUND ACCESSIBLE WHEN VIEWED IN ITS ENTIRETY. PLEASE CONSULT YOUR LEGAL COUNSEL TO DETERMINE IF THE ADA APPLIES TO YOU.
2. FOR PLAYGROUND EQUIPMENT TO BE CONSIDERED ACCESSIBLE ACCESSIBLE SURFACING MUST BE UTILIZED IN APPLICABLE AREAS.
3. ALTHOUGH A PARTICULAR PLAYGROUND DESIGN MY NOT MEET THE PROPOSED ACCESS BOARD REGULATIONS IN REGARDS TO THE APPROPRIATE NUMBER OF GROUND LEVEL EVENTS THE ACTUAL PLAYGROUND MAY BE IN COMPLIANCE WHEN CONSIDERING EXISTING PLAY COMPONENTS.
4. ALL DECK HEIGHTS ARE MEASURED FROM TOP OF GROUND COVER.
5. FALL ABSORBING GROUND COVER IS REQUIRED UNDER AND AROUND ALL PLAY EQUIPMENT.
6. THE MINIMUM RECOMMENDED FALL ZONE AROUND THE ENTIRE PLAYSTRUCTURE IS SHOWN. THIS ZONE IS TO BE FREE OF ALL TRIPPING OR COLLISION HAZARDS (I.E. ROOTS ROCKS BORDER MATERIAL ETC.).
7. ALL POST LENGTHS ARE IDENTIFIED BY TEXT SHOWING THE POST LENGTHS I.E. 96 REPRESENTS A 96 INCH POST.
8. NOT ALL EQUIPMENT MAY BE APPROPRIATE FOR ALL CHILDREN. SUPERVISION IS REQUIRED.

1) Replace Rung Ladder with Safety Rung Ladder
2) Replace Sliding Pole with Pommel Climber
3) Replace Transfer Station Decks with new Decks
4) Add Post Wheel and Post Melody for Compliance

.

Colors: Brown Vinyl, Blue Posts, Tropical Yellow Accents

AGE GROUP: 2-5_ASTM			
ELEVATED PLAY ACTIVITIES - TOTAL:	6		
ELEVATED PLAY ACTIVITIES ACCESIBLE BY TRANSFER:	6	REQ'D	3
ELEVATED PLAY ACTIVITIES ACCESIBLE BY RAMP:	0	REQ'D	0
GROUND LEVEL ACTIVITY TYPE:	2	REQ'D	2
GROUND LEVEL QUANTITY:	2	REQ'D	2

TRANSFER STATION 200200432

RUNG LADDER 200054576

POMMEL CLIMBER 200054590

ROOF 200109105

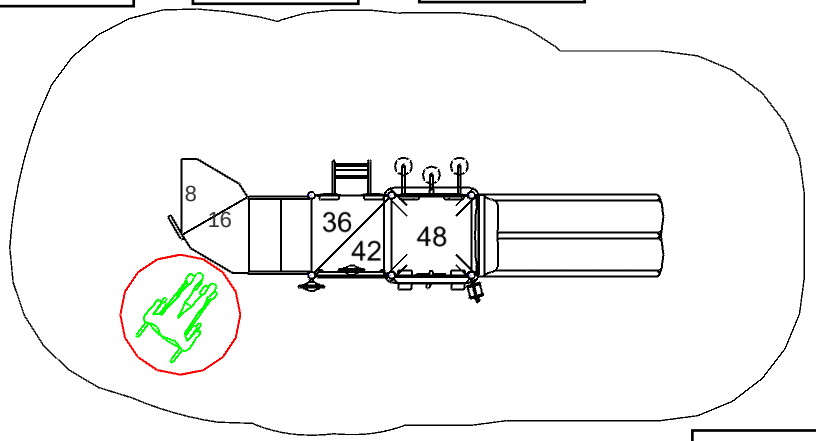

DBL WIDE PLASTIC SLIDE 200200330

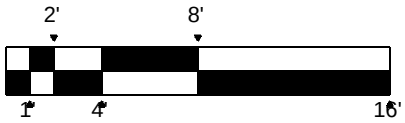

POST WHEEL PLASTIC 200203578

WINDOW PANEL 200054613

WHEEL 200203576

SEVEN STATION PLAY FACTORY 200065770

POST PLAYERS MELODY WHEEL PTMT F/PB 200203883

PROJECT:

Burbank USD - Roosevelt TK 1

LTCPS REP:

Guy Donahoe

GUY DONAHOE

Enter Phone No.

GROUND SPACE: 71' x 66'-6"

PROTECTIVE AREA: 83'-6" x 78'

DRAWN BY: Tracy Grabow

DATE: 04/15/2026

PROJECT: 26007492

LTCPS - FARMINGTON
878 EAST HIGHWAY 60
MONETT MO 65708
VOICE: 1-800-325-8828
FAX: 417-354-2273

PLAYGROUND LAYOUT COMPLIANCE:

☑ ASTM F1487 - PLAYGROUND EQUIPMENT FOR PUBLIC USE

☑ CPSC HANDBOOK FOR PUBLIC PLAYGROUND SAFETY

☑ THIS PLAYGROUND DESIGN MEETS THE FINAL ACCESS BOARD REGULATION.

IPEMA CERTIFIED to ASTM F1487

THE PLAY COMPONENTS IDENTIFIED IN THIS PLAN ARE IPEMA CERTIFIED. THE USE AND LAYOUT OF THE COMPONENTS CONFORM TO THE REQUIREMENTS OF ASTM F1487.

GENERAL NOTES

AGE GROUP

☑ 2-5YRS ☐ 5-12YRS ☐ 2-12YRS ☐ 13YRS

1. THE AMERICANS WITH DISABILITIES ACT (ADA) MAY REQUIRE THAT YOU MAKE YOUR PARK AND/OR PLAYGROUND ACCESSIBLE WHEN VIEWED IN ITS ENTIRETY. PLEASE CONSULT YOUR LEGAL COUNSEL TO DETERMINE IF THE ADA APPLIES TO YOU.
2. FOR PLAYGROUND EQUIPMENT TO BE CONSIDERED ACCESSIBLE ACCESSIBLE SURFACING MUST BE UTILIZED IN APPLICABLE AREAS.
3. ALTHOUGH A PARTICULAR PLAYGROUND DESIGN MY NOT MEET THE PROPOSED ACCESS BOARD REGULATIONS IN REGARDS TO THE APPROPRIATE NUMBER OF GROUND LEVEL EVENTS THE ACTUAL PLAYGROUND MAY BE IN COMPLIANCE WHEN CONSIDERING EXISTING PLAY COMPONENTS.
4. ALL DECK HEIGHTS ARE MEASURED FROM TOP OF GROUND COVER.
5. FALL ABSORBING GROUND COVER IS REQUIRED UNDER AND AROUND ALL PLAY EQUIPMENT.
6. THE MINIMUM RECOMMENDED FALL ZONE AROUND THE ENTIRE PLAYSTRUCTURE IS SHOWN. THIS ZONE IS TO BE FREE OF ALL TRIPPING OR COLLISION HAZARDS (I.E. ROOTS ROCKS BORDER MATERIAL ETC.).
7. ALL POST LENGTHS ARE IDENTIFIED BY TEXT SHOWING THE POST LENGTHS I.E. 96 REPRESENTS A 96 INCH POST.
8. NOT ALL EQUIPMENT MAY BE APPROPRIATE FOR ALL CHILDREN. SUPERVISION IS REQUIRED.

1) Replace Sliding Pole with New Safety Rail
2) Replace Loop Climber with Rung Ladder
3) Replace 48" Step with Pod Climber
4) Transfer Station: Add (2) Half Square Decks, (2) deck to deck plates, Ladder Panel and Transfer Deck
5) Move Safety Rail w/Wheel from 40" to new 32" deck
6) Move Counter Panel, Add Post
.
Colors: Brown Vinyl, Blue Posts, Tropical Yellow Accents

AGE GROUP: 2-5_ASTM			
ELEVATED PLAY ACTIVITIES - TOTAL: 6			
ELEVATED PLAY ACTIVITIES ACCESIBLE BY TRANSFER:	6	REQ'D	3
ELEVATED PLAY ACTIVITIES ACCESIBLE BY RAMP:	0	REQ'D	0
GROUND LEVEL ACTIVITY TYPE:	2	REQ'D	2
GROUND LEVEL QUANTITY:	2	REQ'D	2

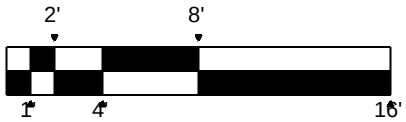

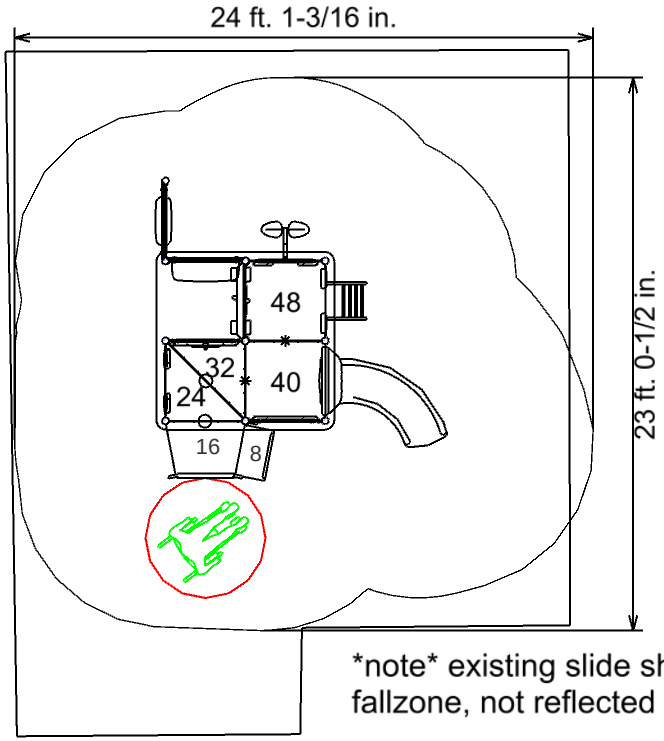

VILLAGE COUNTER PANEL 200054653

SEVEN STATION PLAY FACTORY 200065770

SAFETY RAIL W/WHEEL 200054616
WHEEL 200203575

POD CLIMBER 200202438

RUNG LADDER 200054578

ELBOW SLIDE 200064815

QUAD ROOF 200060686

note existing slide showing six feet to edge of fallzone, not reflected on new drawing

TRANSFER STATION 200200767

SAFETY RAIL 200054618

PROJECT:
A-12
Burbank USD - Roosevelt TK 2

LTCPS REP:
Guy Donahoe
GUY DONAHOE
714 846-4885

GROUND SPACE: 12'-6" x 13'
PROTECTIVE AREA: 24'-6" x 23'-6"

DRAWN BY: Guy Donahoe
DATE: 04/17/2026
PROJECT: 26007492

LTCPS - FARMINGTON
878 EAST HIGHWAY 60
MONETT MO 65708
VOICE: 1-800-325-8828
FAX: 417-354-2273

PLAYGROUND LAYOUT COMPLIANCE:

☑ ASTM F1487 - PLAYGROUND EQUIPMENT FOR PUBLIC USE

☑ CPSC HANDBOOK FOR PUBLIC PLAYGROUND SAFETY

☑ THIS PLAYGROUND DESIGN MEETS THE FINAL ACCESS BOARD REGULATION.

IPEMA CERTIFIED ASTM F1487

THE PLAY COMPONENTS IDENTIFIED IN THIS PLAN ARE IPEMA CERTIFIED. THE USE AND LAYOUT OF THE COMPONENTS CONFORM TO THE REQUIREMENTS OF ASTM F1487.

Burbank Unified School District
Administrative Services

REPORT TO THE BOARD

TO:	Members of the Board of Education
FROM:	Administrative Services
PREPARED BY:	Rachel Paghunasan, Director of Food Services
SUBMITTED BY:	Terri Ramirez-Adams, Senior Administrative Assistant
DATE:	May 7, 2026
SUBJECT:	Approval of Agreement for Professional Services, Webb Design (General Fund)

Background:

Burbank Unified School District is undertaking a districtwide evaluation of foodservice facilities to support DSA and local Health Department compliance, improve kitchen layouts, and inform future operational and capital planning decisions. Several school kitchens require assessment to identify code-related deficiencies, infrastructure needs, and opportunities to improve efficiency and service delivery.

Due to the specialized nature of foodservice facility planning, the District requires a professional consultant with expertise in K-12 foodservice operations, regulatory compliance, and strategic planning. Webb Foodservice Design (Webb) is a qualified foodservice consulting firm with experience providing districtwide planning services for school nutrition programs.

Discussion/Issues:

The Webb Foodservice Design will develop a Districtwide Foodservice Strategic Plan that includes site-specific assessments and concept-level recommendations for selected secondary and middle school campuses. The scope of work focuses on planning and evaluation only and is intended to provide the District with actionable information to support future decision-making.Services include:

- Programming meetings with Food Services leadership to identify strategic goals, vision, and operational methods
- Development of guiding principles for districtwide foodservice planning
- Site assessments and conceptual kitchen layout recommendations addressing:
    - DSA compliance considerations
    - Health Department compliance considerations
- Identification of high-level foodservice infrastructure needs
- Preparation of a preliminary itemized budget aligned with planning concepts
- A final written report outlining findings and recommendations

The following sites are included in the planning effort:

- John Burroughs High School
- Burbank High School
- John Muir Middle School
- Luther Burbank Middle School

- Dolores Huerta Middle School

The agreement does **not** include preparation of construction documents, DSA submittals, or Health Department plan review. These services may be considered separately at a later phase.

Fiscal Impact:

The total cost for foodservice planning services is $15,000, based on a flat fee of $3,000 per school, for five (5) sites.

- Total Contract Amount: $15,000
- Funding Source: Cafeteria Fund – Fund 13
- Additional onsite meetings, if required, may be added at $1,000 per meeting with District approval.

Recommendation:

Administrative Services, recommends that the Board of Education approve the agreement between Burbank Unified School District and Webb Foodservice Design to provide professional foodservice planning services in the amount of $15,000 effective May 8, 2026 (01.0-53100.0-00000-37000-5880-7490000) and that authority to sign the contract pursuant to BUSD—AR 3314, as presented.

April 7, 2026

FOODSERVICE PLANNING AGREEMENT

This agreement between **Webb Foodservice Design** and

Burbank Unified School District
Attn: Rachel Paghunasan
RachelPaghunasan@burbankusd.org
818.729.4540

Webb Foodservice Design agrees to furnish Design Services for:

Burbank Unified School District (BUSD)
Districtwide Foodservice Strategic Plan
Burbank, CA

PROJECT DESCRIPTION & SCOPE:

Burbank Unified School District has requested a foodservice planning proposal from Webb Foodservice Design (Webb) for the BUSD Districtwide Foodservice Strategic Plan project. This fee proposal is based on our understanding of the following project assumptions as listed below:

- Project Scope: Development of Foodservice Strategic Plan to include school specific studies for DSA and Health Department compliance, and recommendations for improved layouts. This proposal does not include design documents or DSA or health department submittal, but it is intended to provide information on costing and to assist BUSD in decision-making to bring these kitchens up to code.
  - John Burroughs High School
  - Burbank High School
  - John Muir Middle School
  - Luther Burbank Middle School
  - Dolores Huerta Middle School
- Schedule: 2- 3 site visits began 3/24/2026 and included Huerta MS and Luther MS.
- Exclusions: Design services beyond concept plans are excluded from this scope of work.

Foodservice Design

P 714.508.1880
1530 S. Lewis St.
Anaheim, CA 92805
webbfsd.com

PLANNING PHASE:

- Participate in a programming meeting with foodservice director to identify strategic planning issues affecting the project, discuss vision, and operational methods.
- Develop goals and objectives (guiding principles) for the projects.
- Develop concept plans that include code-required upgrades for DSA and health department compliance for the kitchens.
- Provide conceptual ideas that describe layout improvements.
- Determine high-level foodservice infrastructure requirements.
- Provide a preliminary itemized budget that collaborates with concept plans.
- Develop a final report outlining findings and recommendations.

MEETINGS:

The total number of project meetings below is included in the base fee. Additional meetings can be added according to the optional services listed below.

Onsite (1x each project location over 2-3 days)	3
Via Video Conference	4
Total	**7**

FEE SCHEDULE:

The fees for the above services are as follows:

Foodservice Planning:

Planning Phase	$15,000.00
Total ($3k per school)	**$15,000.00**

Optional Services:

Additional onsite meetings/ per meeting	$1,000.00

HOURLY COMPENSATION RATES:

Time spent on revisions to work previously approved will be billed at the base hourly rate or overtime rate commensurate with the classification of personnel completing the work, per our current rate schedule which may be revised from time to time. Revision fees include charges to work previously performed and approved by the Client. Our current base rate schedule is as follows:

Principal	$280.00
Associate Principal	$250.00
Studio Lead	$235.00
Project Manager	$225.00
Associate Project Manager	$200.00
Accounting	$200.00
Job Captain	$175.00
Administration	$150.00

PAYMENT:

Project will be billed monthly based on percentage of work completed to date or upon completion of each design phase (whichever occurs first). Payments via credit card will be assessed with a 4% surcharge for processing.

LIMITATIONS:

This proposal is subject to acceptance within thirty (30) days from the date listed within.

Should the project be cancelled or stopped, the hourly rates indicated above will apply for all work performed to date and will be due at that time of cancelation, as well as any reimbursable expenses incurred.

INTERRUPTION OF WORK: Should Consultant's work for this project be postponed and then restarted in a period exceeding sixty (60) days from the date of written notice to stop work, Consultant reserves the right to renegotiate remaining fees.

AGENTS RESPONSIBILITIES: Agent is defined as **Burbank Unified School District**

A. Agent and/or agents' architect shall provide all information and architectural plans concerning requirements for the project and/or building.

COPYRIGHT:

All documents, designs and specifications are the property of Webb Foodservice Design and are fully protected under current copyright laws.

LIMITATION OF LIABILITY:

Compensation. Neither Webb Foodservice Design and its consultants, nor their agents or employees shall be jointly, severally or individually liable to the owner or client in excess of the compensation to be paid pursuant to this agreement by reason of any act or omission, including breach of contract or negligence not amounting to a willful or intentional wrong.

LAW THAT IS GOVERNED:

This agreement is governed by the law of the principal, place of business of Webb Foodservice Design 1530 S Lewis St, Anaheim, California 92805.

AMENDMENT TO AGREEMENT AND OTHER AGREEMENTS:

This agreement can only be amended by a written document signed by both parties and supersedes any oral or written agreements arrived at prior to this agreement.

Webb Foodservice Design	**Burbank Unified School District**
Gina M. Brinegar, FCSI, CFSP Principal	Accepted by: Date: