CITY OF CHARLES TOWN
HISTORIC LANDMARKS COMMISSION
AGENDA • JULY 14, 2025

Commission/Board Meeting | **CITY HALL** | **7:00 PM**

101 E Washington Street, Charles Town, WV 25414

1. CALL TO ORDER

2. APPROVAL OF MINUTES

2.1 : DRAFT July 1 meeting minutes
07012025_HLC_Minutes DRAFT.pdf

3. UNFINISHED BUSINESS

4. NEW BUSINESS

4.1 : **Public Hearing:** *COA2025-08* - 235 W. Washington - Signage
1. Staff Report.pdf
2. Application.pdf
3. DETAILED SHEET.pdf

4.2 : **Public Hearing:** *COA2025-10* - 116 E. Liberty St - Building modifications
1. Staff Report.pdf
2. Application.pdf
3. Dimensions.pdf

4.3 : **Public Hearing:** *COA2025-11*- 120 S. Church St. - Windows
1. Staff Report.pdf
2. Application.pdf
3. Proposed design.pdf
4. Spec Sheet.pdf
5. Existing Window Pictures.pdf

4.4 : **Public Hearing:** *COA2025-12* - 210 N. George St. - Signage
1. Staff Report.pdf
2. Application.pdf
3. Design.pdf
4. Insurance.pdf

4.5 : **Public Hearing:** *FIP2025-02* - 117-119 W. Washington St. - Grant request
1. Staff Report.pdf
2. Application.pdf
3. Quote 1.pdf
4. Quote 2.pdf
5. Quote 3.pdf
6. Bid Narrative.pdf
7. Paint Choices.pdf

5. ADJOURNMENT

6. NOTICE: The Public May View the Meeting Live by Clicking on the Event Link at:

https://www.charlestownwv.us/government/agendas_minutes.php

Historic Landmarks Commission
101 East Washington Street
Charles Town, WV 25414

Meeting: 07/14/25
Department: Historic Landmarks Commission
Category: Report
Initiator:

SCHEDULED

AGENDA ITEM (ID #)

DRAFT July 1 meeting minutes

ATTACHMENTS:

- 07012025_HLC_Minutes DRAFT.pdf

CITY OF CHARLES TOWN
HISTORIC LANDMARKS COMMISSION
MINUTES • May 12, 2025

Committee Meeting **CITY HALL** **7:00 PM**
101 E Washington Street, Charles Town, WV 25414

1. CALL TO ORDER

Present: Amanda Updike - Chair
Diane Drake
Randy Hilton
Anthony Troxel
Nick Zaglifa, Attended Virtually

James Newman, Zoning Administrator

2. APPROVAL OF MINUTES

2:1 May 12, 2025 - Minutes

RESULT:	**Approved Unanimously**
AYES:	Updike, Drake, Hilton, Zaglifa, Troxel

3. UNFINISHED BUSINESS

4. NEW BUSINESS

4:1 Public Hearing: COA 2025-09 – 201 N George St

Staff presentation.

Commission discussion.

Motion to open public hearing:

RESULT:	**Approved**
MOVER:	Troxel
SECONDER:	Drake
AYES:	Updike, Drake, Hilton, Zaglifa, Troxel

Applicant Malissa Coy discussed how the yellow brick above the windows would also be painted along with the squares. She further explained how the symbols could affect the owner of the building in a negative way. Contractor Matt Printz then stated the paint will be a latex based paint and could be removed in the future if need be. No modifications being made to the underlying brick other than painting over it.

Motion to close public hearing

RESULT:	**Approved**

DRAFT

MOVER:	Hilton
SECONDER:	Drake
AYES:	Updike, Drake, Hilton, Zaglifa, Troxel

Clarification was made regarding the wording in the proposal stating 'removal' or painting of the squares. The Commission discussed the meaning of the symbols and whether people even notice them. Further discussion regarding the owner of the building and that they find it offensive and they want to proactively cover the symbols. There was further concern regarding the painting of the symbols and effects on the masonry

The applicant spoke regarding the owner being a well-known author and is concerned about her reputation with people coming to town and seeing her building with the symbols on it. Matt Printz again stated the paint could be removed in the future, if needed.

Motion to approve COA2025-09 as recommended by staff:

RESULT:	**Approved**
MOVER:	Hilton
SECONDER:	Troxel
AYES:	Updike, Drake, Hilton, Zaglifa, Troxel

5. ADJOURNMENT

Motion to adjourn:

RESULT:	**Approved**
MOVER:	Zaglifa
SECONDER:	Hilton
AYES:	Updike, Drake, Hilton, Zaglifa, Troxel

Adjourned at 7:27 pm.

DRAFT

Historic Landmarks Commission
101 East Washington Street
Charles Town, WV 25414

Meeting: 07/14/25
Department: Historic Landmarks Commission
Category: Report
Initiator:

SCHEDULED

AGENDA ITEM (ID #)

Public Hearing: *COA2025-08* - 235 W. Washington - Signage

ATTACHMENTS:

- 1. Staff Report.pdf
- 2. Application.pdf
- 3. DETAILED SHEET.pdf

Certificate of Appropriateness
COA-2025-08

Date: For the July 14, 2025 Historic Landmarks Commission meeting
Applicant: Alameer Obaid
Property Owner: D.R. Properties LLC
Report by: James Newman, City Planner, Zoning/Subdivision Administrator
Proposal: Certificate of Appropriateness for signage
Address: 235 W. Washington St.
Zoning: Old Town Mixed-Use Commercial



HISTORIC SURVEY BUILDING INFORMATION: Downtown Historic District.
235-237 W. Washington Street. Federal-Georgian influence, c. 1800-1810. Flemish bond facade, cornice with modillions and dentils, nine over nine light sash. This five bay brick building represents the formative years of Charles Town. **Contributing**.

PROPOSAL
A request for a Certificate of Appropriateness for a wall sign and a projecting sign.

Staff pictures taken May 28, 2025:

Projecting sign to be placed over this window:



Wall sign to be placed over:



DETAILS

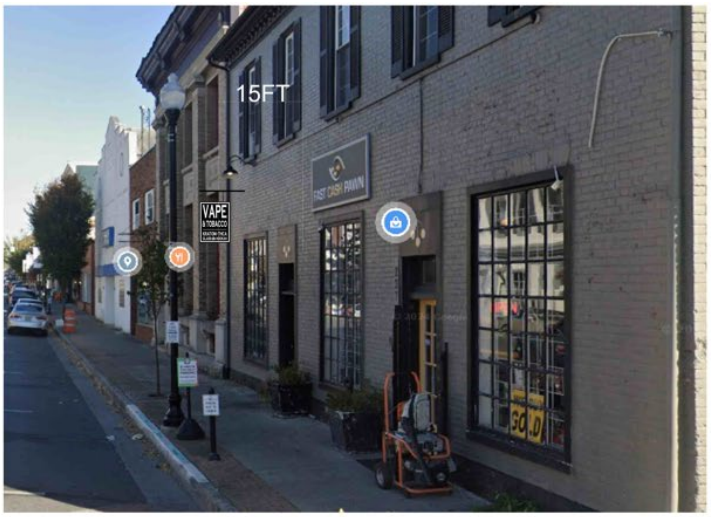



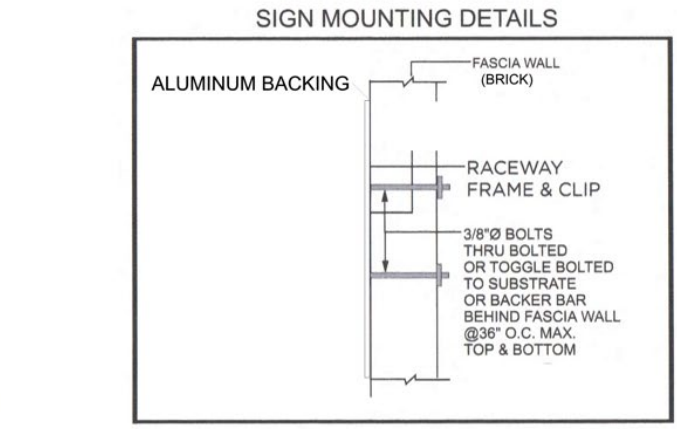

DOUBLE SIDED HANGING SIGN NO LIGHTS



NOTES:
APPROXIMATE SIGN WEIGHT = 100 LBS.

THE SIGN MOUNTING IS DESIGNED FOR 115 MPH, 3 SEC. GUST ULT. WIND SPEED FOR CATEGORY II STRUCTURES AS PER FIG. 1609A OF 2015-MBC.

ALL MOUNTING HARDWARE SHALL BE NON-CORROSIVE.

THIS INSTALLATION IS DESIGNED TO BE INSTALLED AT THE ADDRESS SHOWN ON THE LEFT AND SHOULD NOT BE USED AT OTHER LOCATIONS UNLESS DEEMED SUITABLE BY A LICENSED ENGINEER.



SINGLE SIDED WALL SIGN NO LIGHTS

235 W Washington St

Projecting Sign details:
Width: 2 ft.
Height: 3 ft.

Area is 6 sq. ft.

Wall Sign details
Width: 8 ft.
Height: 3 ft.

Area is 24 sq. ft.

ORDINANCE REQUIREMENTS

Projecting Sign: *A Projecting or Suspended Sign shall not extend more than five (5) feet into the public right-of-way. In no case shall a Projecting or Suspended Sign be permitted to encroach over a motorized Vehicle travel way such as a public or private Street, alley, or Driveway. If such a Sign is suspended or projects above a public right-of- way, the issuance and continuation of a Sign Permit shall be conditioned on the sign owner obtaining, and maintaining in force, liability insurance in an amount of not less than $500,000 per occurrence per Sign.* - Zoning Ordinance page 94.

Wall Sign: *Wall Signs on historic Buildings shall be placed within the sign frieze, or distinct place within which a Wall Sign was intended to be located, if the Building was designed for such. No Wall Sign shall extend beyond such space. If there is no sign frieze, the Wall Sign shall be placed below the typical second floor window area. The design and coloration of such Signs shall be compatible with the character of the Building*; - Zoning Ordinance page 93.

HISTORIC DISTRICT REQUIREMENTS

1. Lettering may be painted, carved into the wood, or individually mounted.
2. Plastic may be used if it is carefully designed and is fabricated with another finish.
3. Signs should be made in a professional manner.
4. Mass produced signs do not blend with the character of the historic district nor the overall streetscape, and as such, they are discouraged.
5. National franchise signs should be compatible with the building and streetscape.
6. Glossy backgrounds that reflect glare and reduce legibility should be avoided, unless the material is appropriate to the façade.

ANALYSIS

Projecting Sign

No insurance policy has been provided, which is a requirement. In reagrds ot the text, the langauge on the sign desribes the products offered, not the name and address alone. This is an issue which City Council is aware of and which is beinga ddressed inn the current Zoning Prdinance overhaul effort. The sign does conform to the sign dimension requirements.

Wall Sign

Conforms to the sign dimension requirements.

RECOMMENDATION

Approval subject to conditions:

1. Prior to installation of the projecting sign, proof liability insurance in an amount of not less than $500,000 per occurrence, shall be provided to City Staff.

COA Application No._____

RECEIVED
MAY 01 2025
BY:

CERTIFICATE OF APPROPRIATENESS APPLICATION

Fee: $60

No buildings, site or structure shall be moved or demolished until after an application for a certificate of appropriateness has been submitted to and approved by the Historic Landmarks Commission. All proposed activity must be approved by the Historic Landmarks Commission (HLC) via issuance of a Certificate of Appropriateness (COA).

Many of the activities for which a COA is required also requires building permit, which is a separate process from obtaining a COA.

COA Application No._____

1. DATE: 4/30/25

2. APPLICANT'S NAME* ALAMeer OBaid

Address: 235 W Washington St Charles Town WV 25414

Telephone Number: (734) 709-2570

Email Address: _____

Relationship to Owner: ☒ Lessee ☐ Contractor ☐ Architect ☐ Consultant

Other: _____

3. PROPERTY OWNER'S NAME Kody Davis

Address: 237 W Washington St.

Telephone Number: (304) 616-0611

Email Address: Stance304@mac.com

*Applicants include: Property owner(s), Engineer(s), Surveyor(s), or Consultant(s)

4. LEGAL DESCRIPTION OF THE SUBJECT PROPERTY (List all parcels that apply)

Property Address: 235 W Washington St.

Tax Map # and Parcel(s): 2B 12

5. DESCRIPTION OF PROPOSED USE(S) OF THE PROPERTY

Tobacco store

6. DESCRIBE THE CURRENT (or if vacant, former) USE OF THE SUBJECT PROPERTY

7. TYPE OF WORK:

A. ☐ Exterior alteration or repairs.

B. ☐ New Construction: 1) ☐ Primary Structure; 2) ☐ Garage; 3) ☐ New Addition; 4) ☐ Other;

C. ☐ Demolition: 1) ☐ Whole Structure; 2) ☐ Part of Structure;

D. ☐ Relocation of Structure

E. Other:

8. City of Charles Town Business License # if work is being performed for a commercial use:

9. EXTERIOR ALTERATION OR REPAIR

A. **Check all that apply** for which approval of the proposed activity is requested:

☐ Architectural feature (decorative ornamentation)	☐ Metal trim	☐ Iron fences
☐ Material changes (wood, brick, metal, etc.)	☐ Windows - replacement, removal, elimination or new opening	☐ New construction
☐ Roof – Change in shape/profile	☐ Shutters	☐ Additions or alterations
☐ Skylights or dormers	☐ Door and transoms	☑ Signs
☐ Masonry - cleaning, tuckpointing, removal of masonry or other changes to the masonry	☐ Cut stone steps	☐ Solar panels
☐ Removal of historic markings and paintings	☐ Security Features	☐ Mothballing
☐ Wood cornices and concealed box gutters	☐ Porch or deck	☐ Demolition
☐ Wood trim	☐ Awnings and canopies	

B. **PROVIDE A NARRATIVE. List and describe in detail all work** to be done for each item checked. Include the following materials when appropriate:

1) Sketches, photographs, specifications, manufacturer's illustrations or other description of proposed changes to the building's exterior. Detailed drawings are required for major changes in architectural features.

2) If material changes are proposed, please provide a description of them. The architect's specifications or brochures may suffice; however, the Commission may request samples of new materials.

C. SIGNS:

1) Signage activities are regulated under Article 1324 (Signs) and Section 1322.13 (Historic Overlay District) of the City of Charles Town's Zoning Ordinance and by extension the Design Review Standards. **All permitted sign sizes, location of placement and additional sign standards are regulated by Article 1324 and shall meet those standards.**

(continued on next page)

D. NEW CONSTRUCTION: Describe the nature of the proposed project. Include the following materials when appropriate:

1) Site plan with measured distances.
2) Elevation drawings of each façade and specifications which clearly show the exterior appearance of the project.
3) Samples or other description of materials to be used.
4) Drawings or other description of site improvements such as fences, sidewalks, lighting, pavement, decks, etc.

E. DEMOLITION OF STRUCTURE

1) Describe the structure's condition and reason for demolition.
2) Additional criteria is found in the Design Review Standards, including the need to prove economic hardship.
3) Describe the proposed reuse of the site, including drawings of any proposed new structure or landscaping.

F. RELOCATION OF STRUCTURE

1) Explain what will be moved, why, and proposed changes.
2) If a building will be moved into a district from outside, include photographs.
3) Include a site plan of the proposed location in the district and describe any site features which will be altered or may be disturbed, including foundations, walls, vegetation, etc.

G. MOTHBALLING OF STRUCTURE

1) Describe how the structure will be secured from unwanted entry.
2) Describe measures to be taken to keep the weather and pest out.
3) If the property owner will not be in the state of West Virginia, designate a local contact.
4) If any door(s) or window(s) are to be boarded up, they must be painted to look like a door or window or decals that look like door and window must be adhered to the boards on the window or door.
5) Additional criteria is found in the Design Review Standards, including the need to prove economic hardship.
6) Describe how the property will be maintained so as to not become a code violation, such yard maintenance.

Signs

Estimated Cost of Signage (**Excluding** Labor & Installation):

5000.00

Sign Contractor:

Contractor License #: WV & City of Charles Town:

TYPE OF SIGN

Type of Sign	Check One	Type of Sign	Check One
Free Standing	☐	Suspended	☐
Building Mounted	✓	Awning	☐
Window Lettering	☐	Other (List)	☐

Where on the property or building will the sign(s) be located?

Sign Material:

SIGN DIMENSIONS:

Height	Width	Depth
4	3	4

WILL SIGN(S) BE LIT? If yes, describe the type of lighting to be used:

Yes, soft white LED light

PLEASE PROVIDE PROOF OF INSURANCE (In case of sign damage), and attach to this form.

PROVIDE AN ILLUSTRATION OR PHOTOGRAPH of the PROPOSED SIGN(S) and LOCATION.

APPLICANT CERTIFICATION

I certify that, to the best of my knowledge, the submitted information and statements are true and correct. I also certify that I have read the relevant provisions of the Charles Town Design Review Standards pertaining to this application, Section 1322.13, of the Zoning Ordinance and for a sign request, Article 1324 of the Zoning Ordinance.

Signature of Applicant

_____ Date _____

Signature of Property Owner(s) (If different than Applicant)

_____ Date 4/30/2025

Please submit an original completed application to the following:

At City Hall:	Or	Via Mail:
Zoning Administrator City of Charles Town 101 E. Washington Street Charles Town, WV 25414		Zoning Administrator City of Charles Town PO BOX 14 Charles Town, WV 25414

CITY USE ONLY

Application Number:_____ Date Application Received:_____

Zoning District: _____

Fee: $_____ Paid: $_____ Check No._____

Receipt No._____

Historic Landmarks Commission Approval or Denial and date of action:

_____

Comments:_____

_____

_____

_____

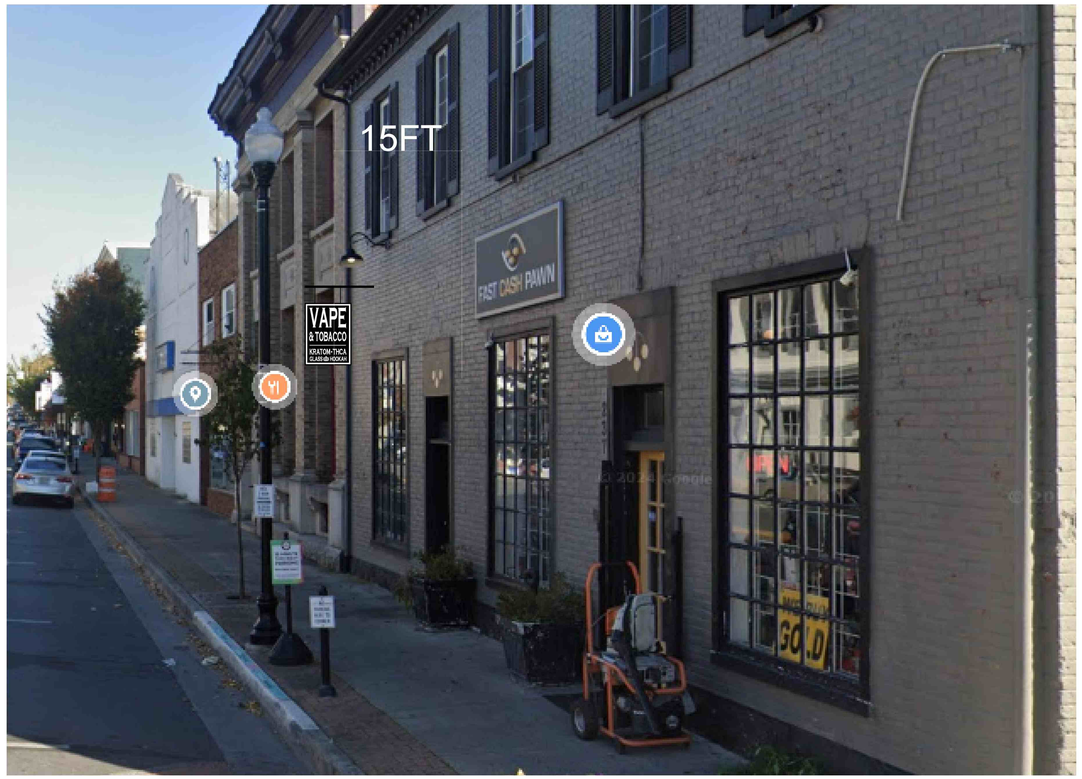



SIGN MOUNTING DETAILS

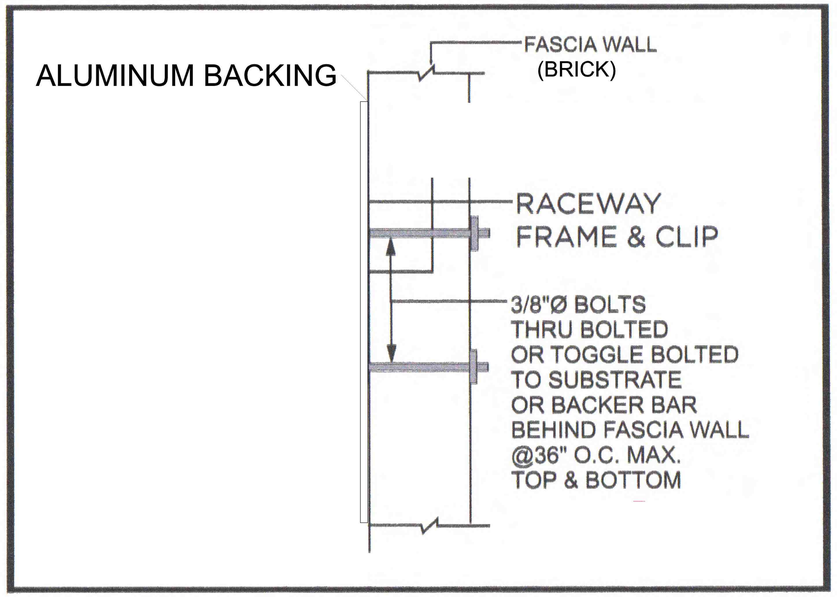

DOUBLE SIDED HANGING SIGN NO LIGHTS



NOTES:
APPROXIMATE SIGN WEIGHT = 100 LBS.

THE SIGN MOUNTING IS DESIGNED FOR 115 MPH, 3 SEC. GUST ULT. WIND SPEED FOR CATEGORY II STRUCTURES AS PER FIG. 1609A OF 2015-MBC.

ALL MOUNTING HARDWARE SHALL BE NON-CORROSIVE.

THIS INSTALLATION IS DESIGNED TO BE INSTALLED AT THE ADDRESS SHOWN ON THE LEFT AND SHOULD NOT BE USED AT OTHER LOCATIONS UNLESS DEEMED SUITABLE BY A LICENSED ENGINEER.

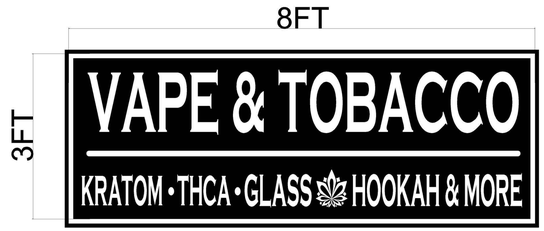

SINGLE SIDED WALL SIGN NO LIGHTS

235 W Washington St

Historic Landmarks Commission
101 East Washington Street
Charles Town, WV 25414

Meeting: 07/14/25
Department: Historic Landmarks Commission
Category: Report
Initiator:

SCHEDULED

AGENDA ITEM (ID #)

Public Hearing: *COA2025-10* - 116 E. Liberty St - Building modifications

ATTACHMENTS:

- 1. Staff Report.pdf
- 2. Application.pdf
- 3. Dimensions.pdf

Certificate of Appropriateness
COA-2025-10

Date: For the July 14, 2025 Historic Landmarks Commission meeting
Applicant: Kline Window and Awning
Property Owner: VFW POST #3533
Report by: James Newman, City Planner, Zoning/Subdivision Administrator
Proposal: Certificate of Appropriateness for exterior modifications
Address: 116 E. Liberty St.
Zoning: Old Town Mixed-Use Commercial

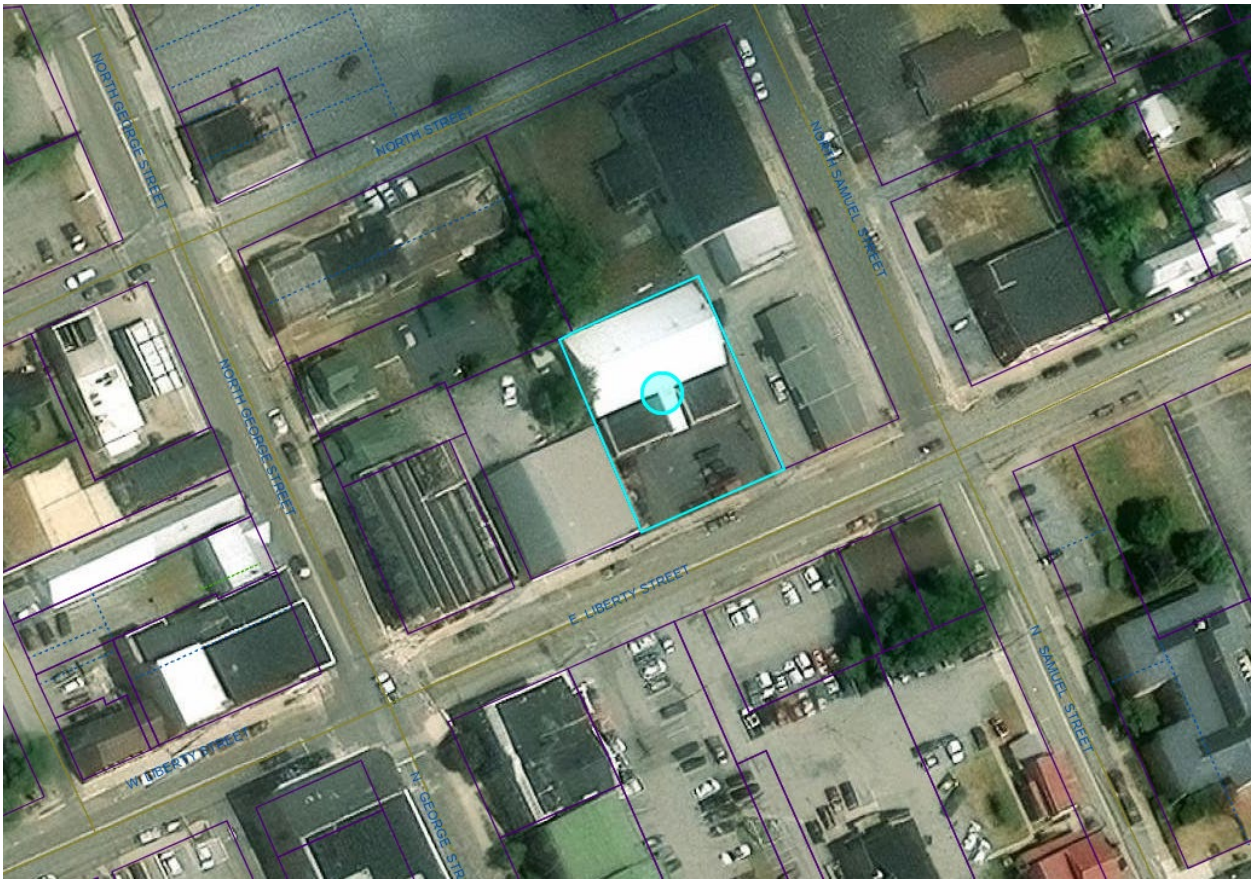

HISTORIC SURVEY BUILDING INFORMATION: Downtown Historic District.
N/S Liberty Street between George and Samuel Streets. VFW. Colonial Revival, c. 1989?. Modern VFW building. **Non-contributing**

PROPOSAL
A request for a Certificate of Appropriateness for an already-built walkway-cover structure.

STRUCTURE IMAGES

August 2021 – Google Streetview



October 2024 – Google Streetview (work circled in yellow)



Pictures from applicant (taken in May/June 2025):







5

ORDINANCE REQUIREMENTS

"Awnings and canopies should be placed only on structures for which they are historically accurate or which there exists physical evidence of a previous treatment. Canvas awnings can be installed over windows and doors if they are historically appropriate. Awnings should only be of canvas material. In commercial areas, awnings should be made of heavy canvas, other woven fabric with canvas-like qualities or vinyl material. Plastic and aluminum are not permitted…..Metal or back-lit awnings are prohibited on commercial buildings."

-Design Review Standards pgs. 37 & 38.

DETAILS

The structure is made of aluminum, with a Styrofoam-like insulation used in the awning (the insulation is located between the top and bottom metal sheet). A building permit is required for this work and none was ever submitted. The structure is located on the side of the building.

RECOMMENDATION

Denial.

The Commission may approve, approve with conditions, table, or deny the request.

COA Application No._____

CERTIFICATE OF APPROPRIATENESS APPLICATION

Fee: $60

No buildings, site or structure shall be moved or demolished until after an application for a certificate of appropriateness has been submitted to and approved by the Historic Landmarks Commission. All proposed activity must be approved by the Historic Landmarks Commission (HLC) via issuance of a Certificate of Appropriateness (COA).

Many of the activities for which a COA is required also requires building permit, which is a separate process from obtaining a COA.

COA Application No._____

1. DATE: 5/7/25

2. APPLICANT'S NAME* Kline Awning and Window

Address: 308 N Main st. Boonsboro Md

Telephone Number: (301) 432-6781

Email Address: KLINE AWNING AND WINDOW @ gmail.

Relationship to Owner: ☐ Lessee ☒ Contractor ☐ Architect ☐ Consultant

Other:_____

3. PROPERTY OWNER'S NAME VFW

Address: 116E Liberty st. Charlestown WV

Telephone Number: (304) 725-5946

Email Address: Randy Delawter delawter22@Yahoo.com

*Applicants include: Property owner(s), Engineer(s), Surveyor(s), or Consultant(s)

4. LEGAL DESCRIPTION OF THE SUBJECT PROPERTY (List all parcels that apply)

Property Address: 116 E Liberty st Charlestown.

Tax Map # and Parcel(s): _____

5. DESCRIPTION OF PROPOSED USE(S) OF THE PROPERTY

_____

_____

6. DESCRIBE THE CURRENT (or if vacant, former) USE OF THE SUBJECT PROPERTY

_____

_____

7. TYPE OF WORK:

A. ☐ Exterior alteration or repairs.

B. ☐ New Construction: 1) ☐ Primary Structure; 2) ☐ Garage;
3) ☐ New Addition; 4) ☒ Other;

C. ☐ Demolition: 1) ☐ Whole Structure; 2) ☐ Part of Structure;

D. ☐ Relocation of Structure

E. Other: Walkway Cover Awnig

_____

8. City of Charles Town Business License # if work is being performed for a commercial use:

_____

9. EXTERIOR ALTERATION OR REPAIR

A. **Check all that apply** for which approval of the proposed activity is requested:

☐ Architectural feature (decorative ornamentation)	☐ Metal trim	☐ Iron fences
☐ Material changes (wood, brick, metal, etc.)	☐ Windows - replacement, removal, elimination or new opening	☐ New construction
☐ Roof – Change in shape/profile	☐ Shutters	☐ Additions or alterations
☐ Skylights or dormers	☐ Door and transoms	☐ Signs
☐ Masonry - cleaning, tuckpointing, removal of masonry or other changes to the masonry	☐ Cut stone steps	☐ Solar panels
☐ Removal of historic markings and paintings	☐ Security Features	☐ Mothballing
☐ Wood cornices and concealed box gutters	☐ Porch or deck	☐ Demolition
☐ Wood trim	☒ Awnings and canopies	

B. **PROVIDE A NARRATIVE. List and describe in detail all work** to be done for each item checked. Include the following materials when appropriate:

1) Sketches, photographs, specifications, manufacturer's illustrations or other description of proposed changes to the building's exterior. Detailed drawings are required for major changes in architectural features.

2) If material changes are proposed, please provide a description of them. The architect's specifications or brochures may suffice; however, the Commission may request samples of new materials.

C. SIGNS:

1) Signage activities are regulated under Article 1324 (Signs) and Section 1322.13 (Historic Overlay District) of the City of Charles Town's Zoning Ordinance and by extension the Design Review Standards. **All permitted sign sizes, location of placement and additional sign standards are regulated by Article 1324 and shall meet those standards.**

(continued on next page)

D. NEW CONSTRUCTION: Describe the nature of the proposed project. Include the following materials when appropriate:

1) Site plan with measured distances.
2) Elevation drawings of each façade and specifications which clearly show the exterior appearance of the project.
3) Samples or other description of materials to be used.
4) Drawings or other description of site improvements such as fences, sidewalks, lighting, pavement, decks, etc.

E. DEMOLITION OF STRUCTURE

1) Describe the structure's condition and reason for demolition.
2) Additional criteria is found in the Design Review Standards, including the need to prove economic hardship.
3) Describe the proposed reuse of the site, including drawings of any proposed new structure or landscaping.

F. RELOCATION OF STRUCTURE

1) Explain what will be moved, why, and proposed changes.
2) If a building will be moved into a district from outside, include photographs.
3) Include a site plan of the proposed location in the district and describe any site features which will be altered or may be disturbed, including foundations, walls, vegetation, etc.

G. MOTHBALLING OF STRUCTURE

1) Describe how the structure will be secured from unwanted entry.
2) Describe measures to be taken to keep the weather and pest out.
3) If the property owner will not be in the state of West Virginia, designate a local contact.
4) If any door(s) or window(s) are to be boarded up, they must be painted to look like a door or window or decals that look like door and window must be adhered to the boards on the window or door.
5) Additional criteria is found in the Design Review Standards, including the need to prove economic hardship.
6) Describe how the property will be maintained so as to not become a code violation, such yard maintenance.

Signs

Estimated Cost of Signage (**Excluding** Labor & Installation):

$7000.00

Sign Contractor:

Contractor License #: WV & City of Charles Town:

WV Contractor # 012993

TYPE OF SIGN

Type of Sign	Check One	Type of Sign	Check One
Free Standing		Suspended	
Building Mounted		Awning	
Window Lettering		Other (List)	

Where on the property or building will the sign(s) be located?

Sign Material:

SIGN DIMENSIONS:

Height	Width	Depth

WILL SIGN(S) BE LIT? If yes, describe the type of lighting to be used:

PLEASE PROVIDE PROOF OF INSURANCE (In case of sign damage), and attach to this form.

PROVIDE AN ILLUSTRATION OR PHOTOGRAPH of the PROPOSED SIGN(S) and LOCATION.

APPLICANT CERTIFICATION

I certify that, to the best of my knowledge, the submitted information and statements are true and correct. I also certify that I have read the relevant provisions of the Charles Town Design Review Standards pertaining to this application, Section 1322.13, of the Zoning Ordinance and for a sign request, Article 1324 of the Zoning Ordinance.

Signature of Applicant

_____ Date 5/7/25

Signature of Property Owner(s) (If different than Applicant)

_____ Date _____

Please submit an original completed application to the following:

At City Hall:	Or	Via Mail:
Zoning Administrator City of Charles Town 101 E. Washington Street Charles Town, WV 25414		Zoning Administrator City of Charles Town PO BOX 14 Charles Town, WV 25414

CITY USE ONLY

Application Number:_____ Date Application Received:_____

Zoning District: _____

Fee: $_____ Paid: $_____ Check No._____

Receipt No._____

Historic Landmarks Commission Approval or Denial and date of action:

_____

Comments:_____

_____

_____

_____

6'

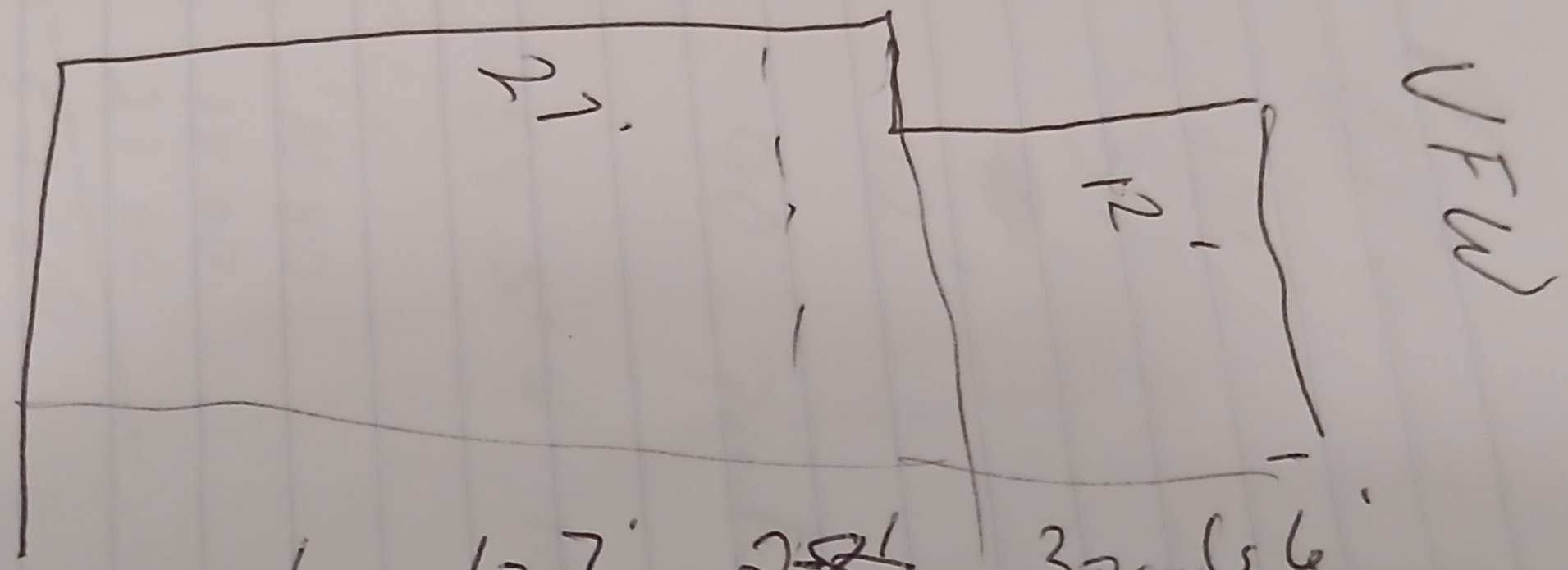

VFW

D P

40'

36" Door.

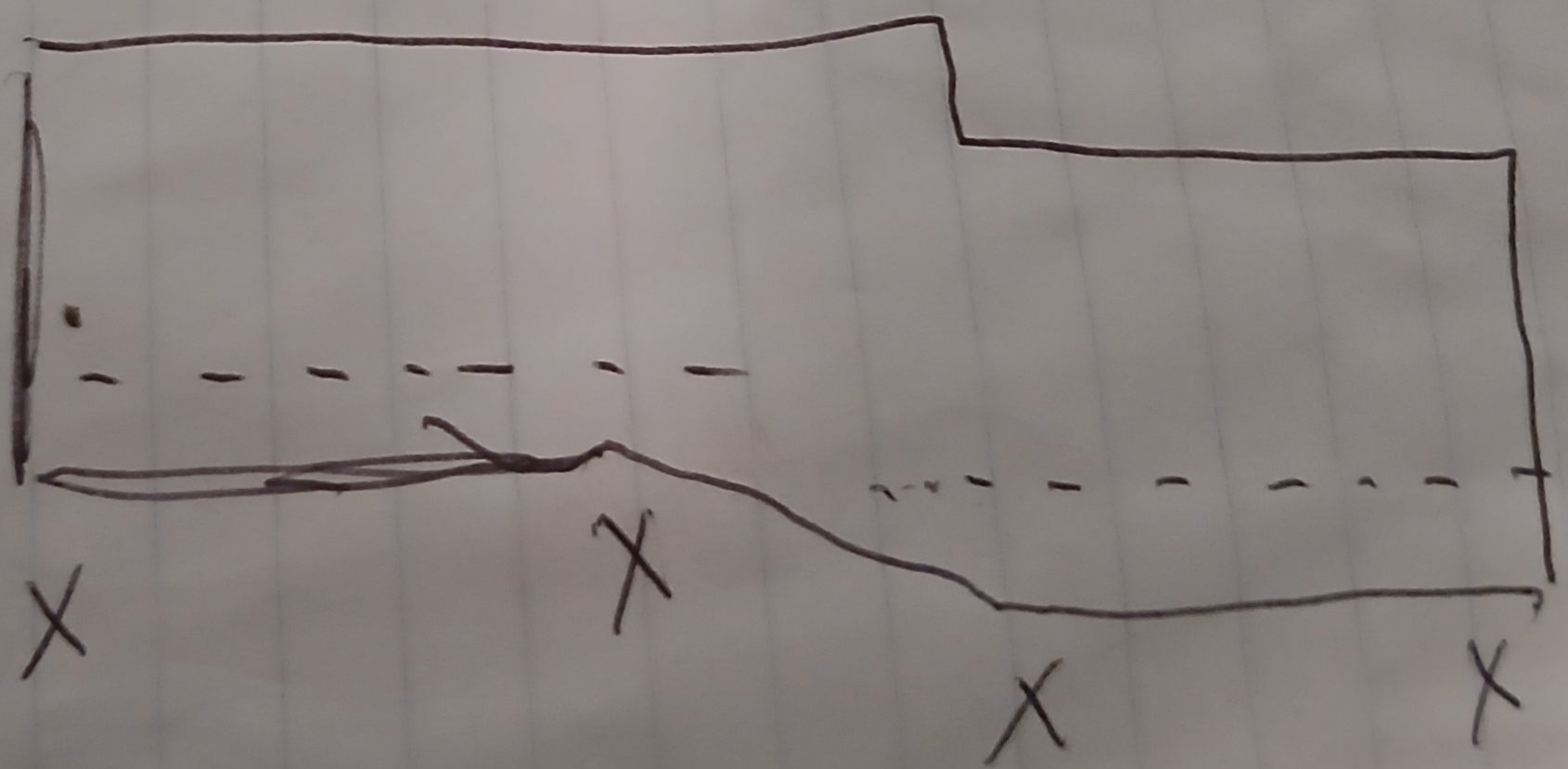

Historic Landmarks Commission
101 East Washington Street
Charles Town, WV 25414

Meeting: 07/14/25
Department: Historic Landmarks Commission
Category: Report
Initiator:

SCHEDULED

AGENDA ITEM (ID #)

Public Hearing: *COA2025-11*- 120 S. Church St. - Windows

ATTACHMENTS:

- 1. Staff Report.pdf
- 2. Application.pdf
- 3. Proposed design.pdf
- 4. Spec Sheet.pdf
- 5. Existing Window Pictures.pdf

Certificate of Appropriateness
COA-2025-11

Date: For the July 8, 2025 Historic Landmarks Commission meeting
Applicant: Tim Riley
Property Owner: David Sanders
Report by: James Newman, City Planner, Zoning/Subdivision Administrator
Proposal: Certificate of Appropriateness for a window replacement
Property Location: 120 S. Church St.
Current Zoning: Old Town Mixed Use Residential (OT-R)



HISTORIC SURVEY BUILDING INFORMATION: Downtown Historic District.
Cape Cod, c. 1950s-60s. **Non-contributing.**

PROPOSAL
Removal of storm windows and replacement of 16 wooden windows with vinyl window and wire screens.

STRUCTURE VIEW

Images from staff pictures taken July 1, 2025:





3


2025/07/01 09:06:21

ORDINANCE REQUIREMENTS

None.

HISTORIC DISTRICT REQUIREMENTS

"*It is almost always advisable for aesthetic and financial reasons to attempt to repair historic windows, before resorting to replacement of in-kind material and design. Replacement of windows which are visible from the primary street and side street, way or alley for corner lots, if different in appearance and material from the original windows, will require a COA. If replacement with Windows of a different appearance is deemed necessary, the property owner must first submit a request for a Certificate of Appropriateness for review and approval or disapproval by the CTHLC, along with the specifications of the replacement window for consideration*" -Design Review Standards, pg. 30.

The applicant seeks to have 16 windows replaced with vinyl substitutes. The new windows will have a 6/6 grid pattern. There is no specific prohibition on vinyl windows in the Design Review Standards; there is a prohibition on vinyl shutters.

As the windows to be replace are already located behind vinyl storm windows, replacing the wooden windows with vinyl would not negatively impact the character of the house, which is already non-contributing.

STAFF RECOMMENDATION

Approval.

COA Application No._____

CERTIFICATE OF APPROPRIATENESS APPLICATION

Fee: $60

No buildings, site or structure shall be moved or demolished until after an application for a certificate of appropriateness has been submitted to and approved by the Historic Landmarks Commission. All proposed activity must be approved by the Historic Landmarks Commission (HLC) via issuance of a Certificate of Appropriateness (COA).

Many of the activities for which a COA is required also requires building permit, which is a separate process from obtaining a COA.

COA Application No._____

1. DATE: 6/16/2025

2. APPLICANT'S NAME* Tim Riley / The Neher Group

Address: P.O. Box 341262 Memphis, TN 38184

Telephone Number: (901) 471-1043

Email Address: tim@tngbuildingpermits.com

Relationship to Owner: ☐ Lessee ☐ Contractor ☐ Architect ☐ Consultant

Other: Authorized Permitting Agent

3. PROPERTY OWNER'S NAME David Sanders

Address: 120 S Church St. Charles Town, WV 25414

Telephone Number: (304) 283-3484

Email Address: _____

*Applicants include: Property owner(s), Engineer(s), Surveyor(s), or Consultant(s)

4. LEGAL DESCRIPTION OF THE SUBJECT PROPERTY (List all parcels that apply)

Property Address: 120 S Church St. Charles Town, WV 25414

Tax Map # and Parcel(s): _____

5. DESCRIPTION OF PROPOSED USE(S) OF THE PROPERTY

Residential

_____

6. DESCRIBE THE CURRENT (or if vacant, former) USE OF THE SUBJECT PROPERTY

Residential

_____

7. TYPE OF WORK:

A. ☑ Exterior alteration or repairs.

B. ☐ New Construction: 1) ☐ Primary Structure; 2) ☐ Garage; 3) ☐ New Addition; 4) ☐ Other;

C. ☐ Demolition: 1) ☐ Whole Structure; 2) ☐ Part of Structure;

D. ☐ Relocation of Structure

E. Other:

_____

_____

8. City of Charles Town Business License # if work is being performed for a commercial use:

_____

9. EXTERIOR ALTERATION OR REPAIR

A. **Check all that apply** for which approval of the proposed activity is requested:

☐ Architectural feature (decorative ornamentation)	☐ Metal trim	☐ Iron fences
☐ Material changes (wood, brick, metal, etc.)	✔ Windows - replacement, removal, elimination or new opening	☐ New construction
☐ Roof – Change in shape/profile	☐ Shutters	☐ Additions or alterations
☐ Skylights or dormers	☐ Door and transoms	☐ Signs
☐ Masonry - cleaning, tuckpointing, removal of masonry or other changes to the masonry	☐ Cut stone steps	☐ Solar panels
☐ Removal of historic markings and paintings	☐ Security Features	☐ Mothballing
☐ Wood cornices and concealed box gutters	☐ Porch or deck	☐ Demolition
☐ Wood trim	☐ Awnings and canopies	

B. **PROVIDE A NARRATIVE**. **List and describe in detail all work** to be done for each item checked. Include the following materials when appropriate:

1) Sketches, photographs, specifications, manufacturer's illustrations or other description of proposed changes to the building's exterior. Detailed drawings are required for major changes in architectural features.

2) If material changes are proposed, please provide a description of them. The architect's specifications or brochures may suffice; however, the Commission may request samples of new materials.

C. SIGNS:

1) Signage activities are regulated under Article 1324 (Signs) and Section 1322.13 (Historic Overlay District) of the City of Charles Town's Zoning Ordinance and by extension the Design Review Standards. **All permitted sign sizes, location of placement and additional sign standards are regulated by Article 1324 and shall meet those standards.**

(continued on next page)

D. NEW CONSTRUCTION: Describe the nature of the proposed project. Include the following materials when appropriate:

1) Site plan with measured distances.
2) Elevation drawings of each façade and specifications which clearly show the exterior appearance of the project.
3) Samples or other description of materials to be used.
4) Drawings or other description of site improvements such as fences, sidewalks, lighting, pavement, decks, etc.

E. DEMOLITION OF STRUCTURE

1) Describe the structure's condition and reason for demolition.
2) Additional criteria is found in the Design Review Standards, including the need to prove economic hardship.
3) Describe the proposed reuse of the site, including drawings of any proposed new structure or landscaping.

F. RELOCATION OF STRUCTURE

1) Explain what will be moved, why, and proposed changes.
2) If a building will be moved into a district from outside, include photographs.
3) Include a site plan of the proposed location in the district and describe any site features which will be altered or may be disturbed, including foundations, walls, vegetation, etc.

G. MOTHBALLING OF STRUCTURE

1) Describe how the structure will be secured from unwanted entry.
2) Describe measures to be taken to keep the weather and pest out.
3) If the property owner will not be in the state of West Virginia, designate a local contact.
4) If any door(s) or window(s) are to be boarded up, they must be painted to look like a door or window or decals that look like door and window must be adhered to the boards on the window or door.
5) Additional criteria is found in the Design Review Standards, including the need to prove economic hardship.
6) Describe how the property will be maintained so as to not become a code violation, such yard maintenance.

APPLICANT CERTIFICATION

I certify that, to the best of my knowledge, the submitted information and statements are true and correct. I also certify that I have read the relevant provisions of the Charles Town Design Review Standards pertaining to this application, Section 1322.13, of the Zoning Ordinance and for a sign request, Article 1324 of the Zoning Ordinance.

Signature of Applicant

Tim Riley _____ Date 6/15/2025

Signature of Property Owner(s) (If different than Applicant)

_____ Date _____

Please submit an original completed application to the following:

At City Hall:	Or	Via Mail:
Zoning Administrator City of Charles Town 101 E. Washington Street Charles Town, WV 25414		Zoning Administrator City of Charles Town PO BOX 14 Charles Town, WV 25414

CITY USE ONLY

Application Number:_____ Date Application Received:_____

Zoning District: _____

Fee: $_____ Paid: $_____ Check No._____

Receipt No._____

Historic Landmarks Commission Approval or Denial and date of action:

_____

Comments:_____

_____

_____

_____

CUSTOMER + LIST COPY

QUOTATION #3193083

Date Entered:	**4/11/2025**
Date Printed:	**4/15/2025**
Printed By:	**Anona Kropf**

SOLD TO:
The Home Depot
Accounts Payable B-12
2455 Paces Ferry Road NW
Atlanta, GA 30339-4024
Phone: 301-948-7500
Fax:

SHIP TO:
THD/DC METRO-Frederick EAST
Runners Inc
6900 English Muffin Way Ste A
Frederick, MD 21703
Phone: 301-948-7500
Fax:

PO NUMBER	QUOTE NAME	PROJECT NAME
54059033	Sanders	Unassigned

LineItem #	Qty.	Description
100-1	1	6100 Double Hung 28" X 53.5" Operation = Operating, Frame = Replacement Frame (2R), Ext. Color = White, Int. Color = White, Glass Package = Standard Glass Options, ProSolar Low E, Argon, Intercept, 3/4"IGU, Glass Thickness = 3/32 in - 3/32 out SS, Upper = Annealed, Lower = Annealed, Locks = 2, White, Cam, Air Latches = 2, Sill Extender, Head Expander, Screen Coverage = Half, Fiberglass, Extruded, Grille Pattern = Colonial, Grille App = 3/4" Contour, White, 3W2H, U-Factor = 0.31, SHGC = 0.27, VT = 0.47, STC = 0, CPD Number = SBP-A-112-10167-00002, Meets Energy Star Zones = None, DP = 30, AAMA, TDI = WIN-1601, Florida Approval Code = 5167 **RO:** 28.25 x 54 **Room ID:** Living Room

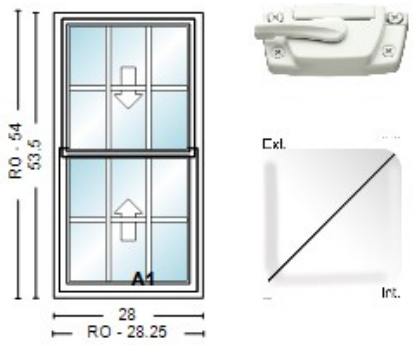

Initials: _____

LineItem #	Qty.	Description
200-1	1	6100 Double Hung 28" X 53.5" Operation = Operating, Frame = Replacement Frame (2R), Ext. Color = White, Int. Color = White, Glass Package = Standard Glass Options, ProSolar Low E, Argon, Intercept, 3/4"IGU, Glass Thickness = 3/32 in - 3/32 out SS, Upper = Annealed, Lower = Annealed, Locks = 2, White, Cam, Air Latches = 2, Sill Extender, Head Expander, Screen Coverage = Half, Fiberglass, Extruded, Grille Pattern = Colonial, Grille App = 3/4" Contour, White, 3W2H, U-Factor = 0.31, SHGC = 0.27, VT = 0.47, STC = 0, CPD Number = SBP-A-112-10167-00002, Meets Energy Star Zones = None, DP = 30, AAMA, TDI = WIN-1601, Florida Approval Code = 5167 **RO:** 28.25 x 54 **Room ID:** Living Room

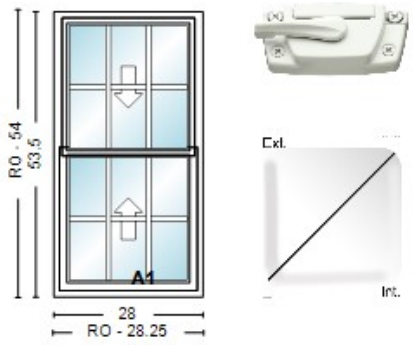

Initials: _____

PO NUMBER	QUOTE NAME	PROJECT NAME
54059033	Sanders	Unassigned

LineItem #	Qty.	Description
300-1	1	6100 Double Hung 28" X 53.5" Operation = Operating, Frame = Replacement Frame (2R), Ext. Color = White, Int. Color = White, Glass Package = Standard Glass Options, ProSolar Low E, Argon, Intercept, 3/4"IGU, Glass Thickness = 3/32 in - 3/32 out SS, Upper = Annealed, Lower = Annealed, Locks = 2, White, Cam, Air Latches = 2, Sill Extender, Head Expander, Screen Coverage = Half, Fiberglass, Extruded, Grille Pattern = Colonial, Grille App = 3/4" Contour, White, 3W2H, U-Factor = 0.31, SHGC = 0.27, VT = 0.47, STC = 0, CPD Number = SBP-A-112-10167-00002, Meets Energy Star Zones = None, DP = 30, AAMA, TDI = WIN-1601, Florida Approval Code = 5167

RO:
28.25 x 54
Room ID:
Living Room

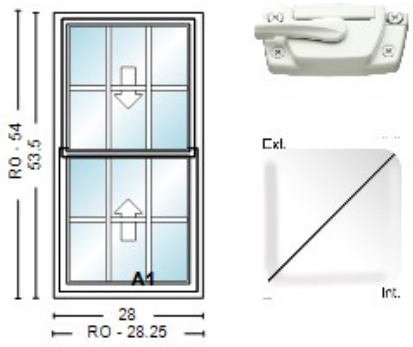

Initials: _____

LineItem #	Qty.	Description
400-1	1	6100 Double Hung 28" X 53.5" Operation = Operating, Frame = Replacement Frame (2R), Ext. Color = White, Int. Color = White, Glass Package = Standard Glass Options, ProSolar Low E, Argon, Intercept, 3/4"IGU, Glass Thickness = 3/32 in - 3/32 out SS, Upper = Annealed, Lower = Annealed, Locks = 2, White, Cam, Air Latches = 2, Sill Extender, Head Expander, Screen Coverage = Half, Fiberglass, Extruded, Grille Pattern = Colonial, Grille App = 3/4" Contour, White, 3W2H, U-Factor = 0.31, SHGC = 0.27, VT = 0.47, STC = 0, CPD Number = SBP-A-112-10167-00002, Meets Energy Star Zones = None, DP = 30, AAMA, TDI = WIN-1601, Florida Approval Code = 5167

RO:
28.25 x 54
Room ID:
Custom
Dining Room

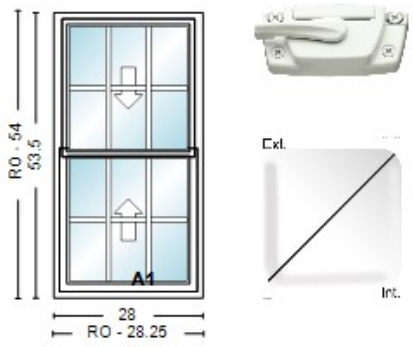

Initials: _____

PO NUMBER	QUOTE NAME	PROJECT NAME
54059033	Sanders	Unassigned

LineItem #	Qty.	Description
500-1	1	6100 Double Hung 28" X 53.5" Operation = Operating, Frame = Replacement Frame (2R), Ext. Color = White, Int. Color = White, Glass Package = Standard Glass Options, ProSolar Low E, Argon, Intercept, 3/4"IGU, Glass Thickness = 3/32 in - 3/32 out SS, Upper = Annealed, Lower = Annealed, Locks = 2, White, Cam, Air Latches = 2, Sill Extender, Head Expander, Screen Coverage = Half, Fiberglass, Extruded, Grille Pattern = Colonial, Grille App = 3/4" Contour, White, 3W2H, U-Factor = 0.31, SHGC = 0.27, VT = 0.47, STC = 0, CPD Number = SBP-A-112-10167-00002, Meets Energy Star Zones = None, DP = 30, AAMA, TDI = WIN-1601, Florida Approval Code = 5167 **RO:** 28.25 x 54 **Room ID:** Custom Dining Room

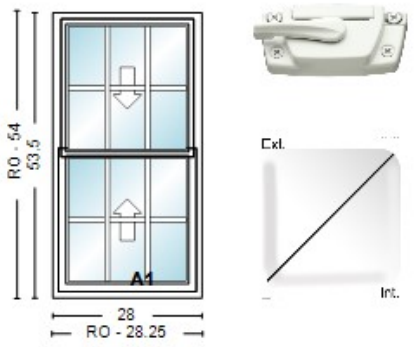

Initials: _____

LineItem #	Qty.	Description
600-1	1	6100 Double Hung 28" X 37.5" Operation = Operating, Frame = Replacement Frame (2R), Ext. Color = White, Int. Color = White, Glass Package = Standard Glass Options, ProSolar Low E, Argon, Intercept, 3/4"IGU, Glass Thickness = 1/8 in - 1/8 out DS, Upper = Tempered, Lower = Tempered, Locks = 2, White, Cam, Air Latches = 2, Sill Extender, Head Expander, Screen Coverage = Half, Fiberglass, Extruded, Grille Pattern = Colonial, Grille App = 3/4" Contour, White, 3W2H, U-Factor = 0.3, SHGC = 0.27, VT = 0.47, STC = 0, CPD Number = SBP-A-112-10168-00002, Meets Energy Star Zones = None, DP = 30, AAMA, TDI = WIN-1601, Florida Approval Code = 5167 **RO:** 28.25 x 38 **Room ID:** Bathroom

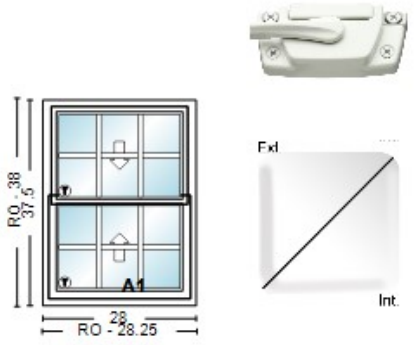

Initials: _____

PO NUMBER	QUOTE NAME	PROJECT NAME
54059033	Sanders	Unassigned

LineItem #	Qty.	Description
700-1	1	6100 Double Hung 28" X 53.5" Operation = Operating, Frame = Replacement Frame (2R), Ext. Color = White, Int. Color = White, Glass Package = Standard Glass Options, ProSolar Low E, Argon, Intercept, 3/4"IGU, Glass Thickness = 3/32 in - 3/32 out SS, Upper = Annealed, Lower = Annealed, Locks = 2, White, Cam, Air Latches = 2, Sill Extender, Head Expander, Screen Coverage = Half, Fiberglass, Extruded, Grille Pattern = Colonial, Grille App = 3/4" Contour, White, 3W2H, U-Factor = 0.31, SHGC = 0.27, VT = 0.47, STC = 0, CPD Number = SBP-A-112-10167-00002, Meets Energy Star Zones = None, DP = 30, AAMA, TDI = WIN-1601, Florida Approval Code = 5167

RO:
28.25 x 54
Room ID:
Custom
Bedroom 1

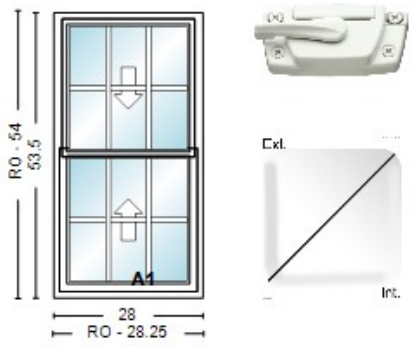

Initials: _____

LineItem #	Qty.	Description
800-1	1	6100 Double Hung 28" X 53.5" Operation = Operating, Frame = Replacement Frame (2R), Ext. Color = White, Int. Color = White, Glass Package = Standard Glass Options, ProSolar Low E, Argon, Intercept, 3/4"IGU, Glass Thickness = 3/32 in - 3/32 out SS, Upper = Annealed, Lower = Annealed, Locks = 2, White, Cam, Air Latches = 2, Sill Extender, Head Expander, Screen Coverage = Half, Fiberglass, Extruded, Grille Pattern = Colonial, Grille App = 3/4" Contour, White, 3W2H, U-Factor = 0.31, SHGC = 0.27, VT = 0.47, STC = 0, CPD Number = SBP-A-112-10167-00002, Meets Energy Star Zones = None, DP = 30, AAMA, TDI = WIN-1601, Florida Approval Code = 5167

RO:
28.25 x 54
Room ID:
Custom
Bedroom 1

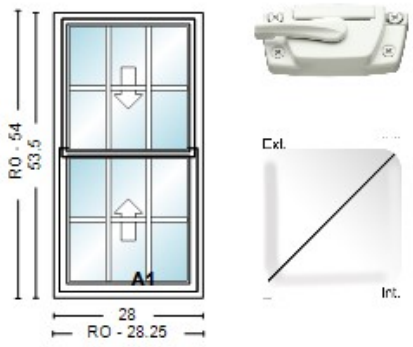

Initials: _____

PO NUMBER	QUOTE NAME	PROJECT NAME
54059033	Sanders	Unassigned

LineItem #	Qty.	Description
900-1	1	6100 Double Hung 28" X 53.5" Operation = Operating, Frame = Replacement Frame (2R), Ext. Color = White, Int. Color = White, Glass Package = Standard Glass Options, ProSolar Low E, Argon, Intercept, 3/4"IGU, Glass Thickness = 3/32 in - 3/32 out SS, Upper = Annealed, Lower = Annealed, Locks = 2, White, Cam, Air Latches = 2, Sill Extender, Head Expander, Screen Coverage = Half, Fiberglass, Extruded, Grille Pattern = Colonial, Grille App = 3/4" Contour, White, 3W2H, U-Factor = 0.31, SHGC = 0.27, VT = 0.47, STC = 0, CPD Number = SBP-A-112-10167-00002, Meets Energy Star Zones = None, DP = 30, AAMA, TDI = WIN-1601, Florida Approval Code = 5167

RO:
28.25 x 54
Room ID:
Custom
Office/Computer

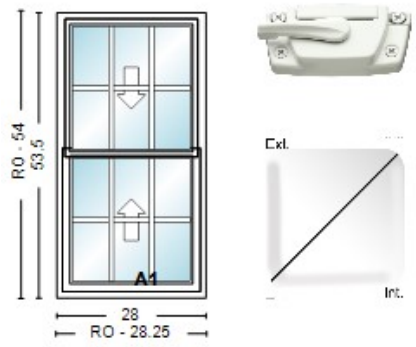

Initials: _____

LineItem #	Qty.	Description
1000-1	1	6100 Double Hung 28" X 53.5" Operation = Operating, Frame = Replacement Frame (2R), Ext. Color = White, Int. Color = White, Glass Package = Standard Glass Options, ProSolar Low E, Argon, Intercept, 3/4"IGU, Glass Thickness = 3/32 in - 3/32 out SS, Upper = Annealed, Lower = Annealed, Locks = 2, White, Cam, Air Latches = 2, Sill Extender, Head Expander, Screen Coverage = Half, Fiberglass, Extruded, Grille Pattern = Colonial, Grille App = 3/4" Contour, White, 3W2H, U-Factor = 0.31, SHGC = 0.27, VT = 0.47, STC = 0, CPD Number = SBP-A-112-10167-00002, Meets Energy Star Zones = None, DP = 30, AAMA, TDI = WIN-1601, Florida Approval Code = 5167

RO:
28.25 x 54
Room ID:
Custom
Office/Computer

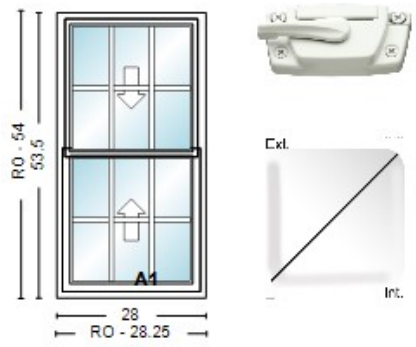

Initials: _____

PO NUMBER	QUOTE NAME	PROJECT NAME
54059033	Sanders	Unassigned

LineItem #	Qty.	Description
1100-1	1	6100 Double Hung 28" X 53.5" Operation = Operating, Frame = Replacement Frame (2R), Ext. Color = White, Int. Color = White, Glass Package = Standard Glass Options, ProSolar Low E, Argon, Intercept, 3/4"IGU, Glass Thickness = 3/32 in - 3/32 out SS, Upper = Annealed, Lower = Annealed, Locks = 2, White, Cam, Air Latches = 2, Sill Extender, Head Expander, Screen Coverage = Half, Fiberglass, Extruded, Grille Pattern = Colonial, Grille App = 3/4" Contour, White, 3W2H, U-Factor = 0.31, SHGC = 0.27, VT = 0.47, STC = 0, CPD Number = SBP-A-112-10167-00002, Meets Energy Star Zones = None, DP = 30, AAMA, TDI = WIN-1601, Florida Approval Code = 5167 **RO:** 28.25 x 54 **Room ID:** Custom Office/Computer

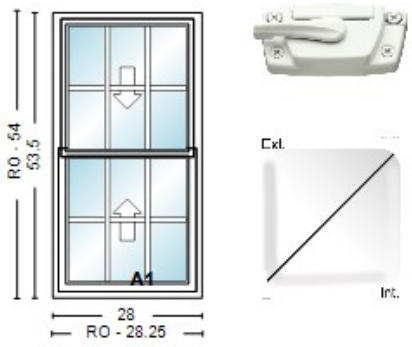

Initials: _____

LineItem #	Qty.	Description
1200-1	1	6100 Double Hung 28" X 45.5" Operation = Operating, Frame = Replacement Frame (2R), Ext. Color = White, Int. Color = White, Glass Package = Standard Glass Options, ProSolar Low E, Argon, Intercept, 3/4"IGU, Glass Thickness = 3/32 in - 3/32 out SS, Upper = Annealed, Lower = Annealed, Locks = 2, White, Cam, Air Latches = 2, Sill Extender, Head Expander, Screen Coverage = Half, Fiberglass, Extruded, Grille Pattern = Colonial, Grille App = 3/4" Contour, White, 3W2H, U-Factor = 0.31, SHGC = 0.27, VT = 0.47, STC = 0, CPD Number = SBP-A-112-10167-00002, Meets Energy Star Zones = None, DP = 30, AAMA, TDI = WIN-1601, Florida Approval Code = 5167 **RO:** 28.25 x 46 **Room ID:** Custom Bedroom 2

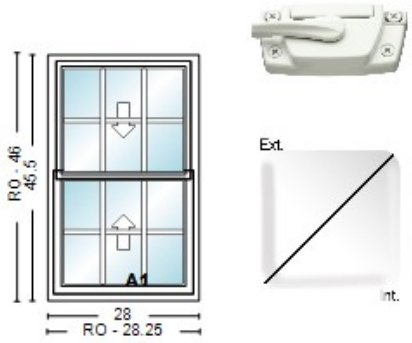

Initials: _____

PO NUMBER	QUOTE NAME	PROJECT NAME
54059033	Sanders	Unassigned

LineItem #	Qty.	Description
1300-1	1	6100 Double Hung 28" X 45.5" Operation = Operating, Frame = Replacement Frame (2R), Ext. Color = White, Int. Color = White, Glass Package = Standard Glass Options, ProSolar Low E, Argon, Intercept, 3/4"IGU, Glass Thickness = 3/32 in - 3/32 out SS, Upper = Annealed, Lower = Annealed, Locks = 2, White, Cam, Air Latches = 2, Sill Extender, Head Expander, Screen Coverage = Half, Fiberglass, Extruded, Grille Pattern = Colonial, Grille App = 3/4" Contour, White, 3W2H, U-Factor = 0.31, SHGC = 0.27, VT = 0.47, STC = 0, CPD Number = SBP-A-112-10167-00002, Meets Energy Star Zones = None, DP = 30, AAMA, TDI = WIN-1601, Florida Approval Code = 5167
RO: 28.25 x 46 **Room ID:** Custom Bedroom 2		

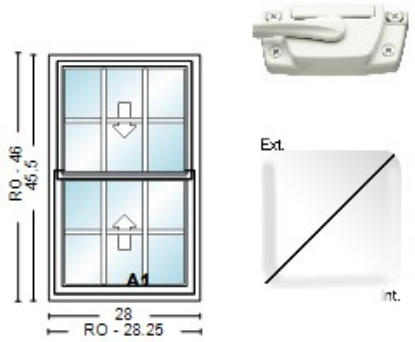

Initials: _____

LineItem #	Qty.	Description
1400-1	1	6100 Double Hung 28" X 45.5" Operation = Operating, Frame = Replacement Frame (2R), Ext. Color = White, Int. Color = White, Glass Package = Standard Glass Options, ProSolar Low E, Argon, Intercept, 3/4"IGU, Glass Thickness = 1/8 in - 1/8 out DS, Upper = Tempered, Lower = Tempered, Locks = 2, White, Cam, Air Latches = 2, Sill Extender, Head Expander, Screen Coverage = Half, Fiberglass, Extruded, Grille Pattern = Colonial, Grille App = 3/4" Contour, White, 3W2H, U-Factor = 0.3, SHGC = 0.27, VT = 0.47, STC = 0, CPD Number = SBP-A-112-10168-00002, Meets Energy Star Zones = None, DP = 30, AAMA, TDI = WIN-1601, Florida Approval Code = 5167
RO: 28.25 x 46 **Room ID:** Bathroom		

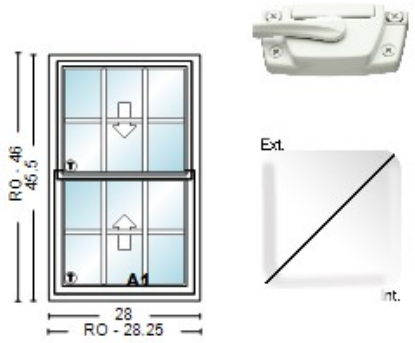

Initials: _____

PO NUMBER	QUOTE NAME	PROJECT NAME
54059033	Sanders	Unassigned

LineItem #	Qty.	Description
1500-1 **RO:** 28.25 x 46 **Room ID:** Custom Bedroom 3	1	6100 Double Hung 28" X 45.5" Operation = Operating, Frame = Replacement Frame (2R), Ext. Color = White, Int. Color = White, Glass Package = Standard Glass Options, ProSolar Low E, Argon, Intercept, 3/4"IGU, Glass Thickness = 3/32 in - 3/32 out SS, Upper = Annealed, Lower = Annealed, Locks = 2, White, Cam, Air Latches = 2, Sill Extender, Head Expander, Screen Coverage = Half, Fiberglass, Extruded, Grille Pattern = Colonial, Grille App = 3/4" Contour, White, 3W2H, U-Factor = 0.31, SHGC = 0.27, VT = 0.47, STC = 0, CPD Number = SBP-A-112-10167-00002, Meets Energy Star Zones = None, DP = 30, AAMA, TDI = WIN-1601, Florida Approval Code = 5167

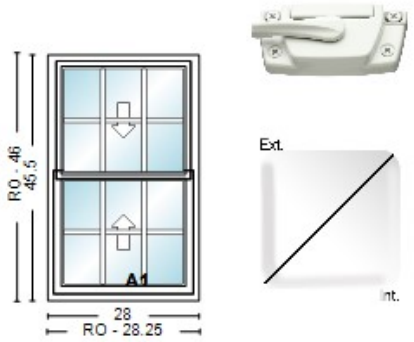

Initials: _____

LineItem #	Qty.	Description
1600-1 **RO:** 28.25 x 46 **Room ID:** Custom Bedroom 3	1	6100 Double Hung 28" X 45.5" Operation = Operating, Frame = Replacement Frame (2R), Ext. Color = White, Int. Color = White, Glass Package = Standard Glass Options, ProSolar Low E, Argon, Intercept, 3/4"IGU, Glass Thickness = 3/32 in - 3/32 out SS, Upper = Annealed, Lower = Annealed, Locks = 2, White, Cam, Air Latches = 2, Sill Extender, Head Expander, Screen Coverage = Half, Fiberglass, Extruded, Grille Pattern = Colonial, Grille App = 3/4" Contour, White, 3W2H, U-Factor = 0.31, SHGC = 0.27, VT = 0.47, STC = 0, CPD Number = SBP-A-112-10167-00002, Meets Energy Star Zones = None, DP = 30, AAMA, TDI = WIN-1601, Florida Approval Code = 5167

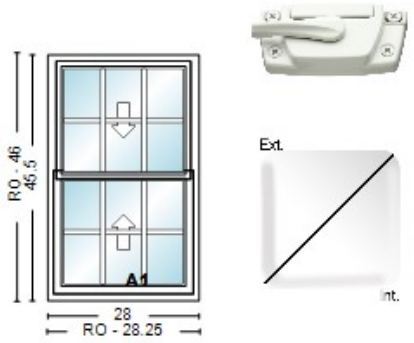

Initials: _____

16 Total Qty Units

$0.00

Comment:

Submitted by: _____ **Accepted by:** _____ **Date** _____

Simonton

6100

Comfort/Security

Dual Vent Latches

Cam Lock

Ease of Maintenance

Flush Mounted Tilt Latches

Tilt In / Lift Out Sash

Durability

1/2” Stainless Steel
Constant-Force Coil Balance

Fusion-Welded Frame & Sash

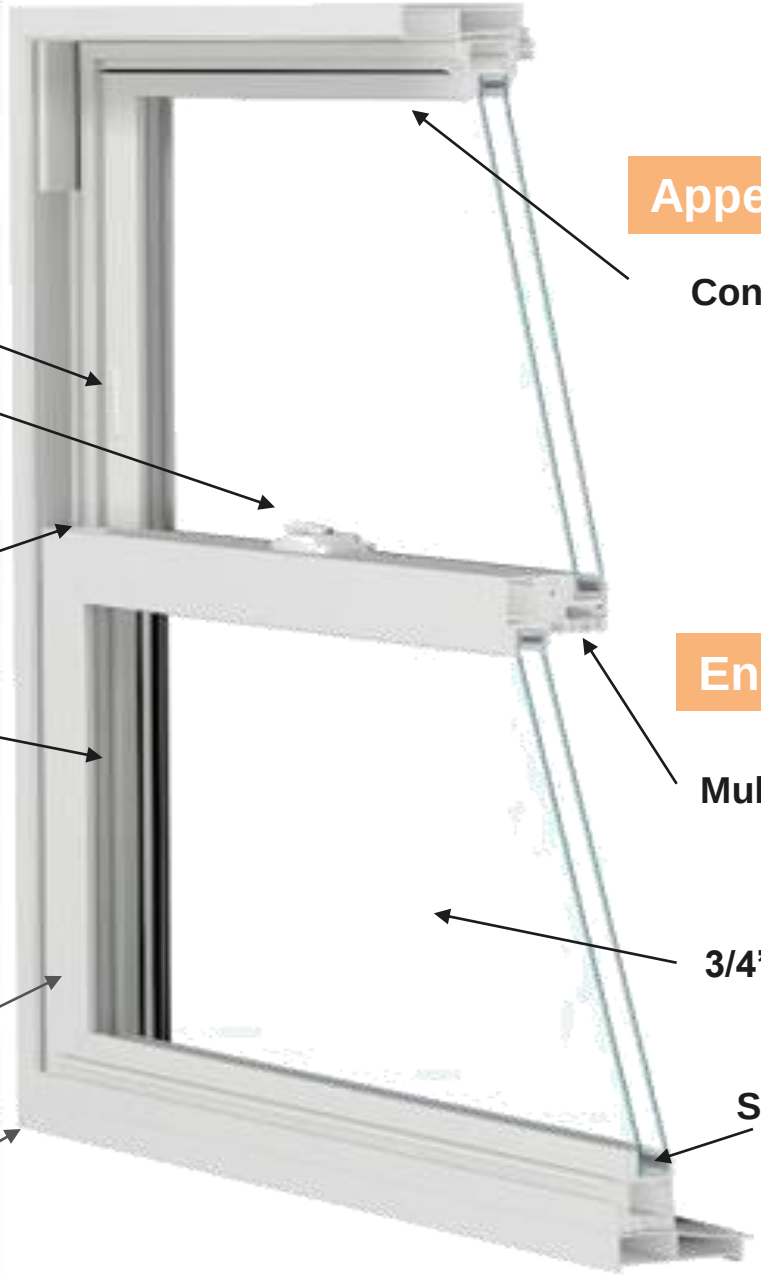

Appearance

Contoured Extruded Lift Rails

Energy Efficiency

Multiple Chambers Profile

3/4” Insulated Glass Unit

Supercept Spacer System

Simonton

6100

Colors

White

Tan

Grid Options

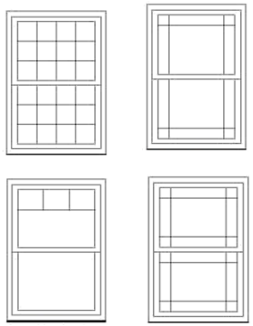

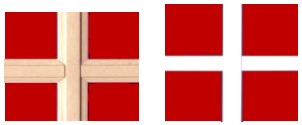

Sculptured

Flat

Styles

Double Hung

2 PNL Slider

3 PNL End Vent

Casement

Awning /Hopper

Picture

Shapes

Bay/Bow

Garden Window

Patio Doors

Glass Options

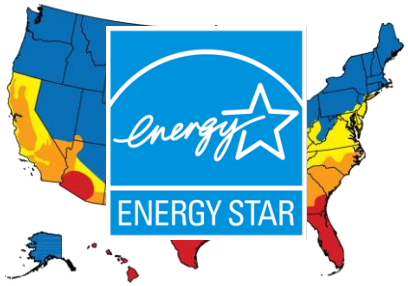

Obscure



Simonton

6100

Comfort/Security

Dual Vent Latches

Cam Lock

Ease of Maintenance

Flush Mounted Tilt Latches

Tilt In / Lift Out Sash

Durability

1/2” Stainless Steel
Constant-Force Coil Balance

Fusion-Welded Frame & Sash

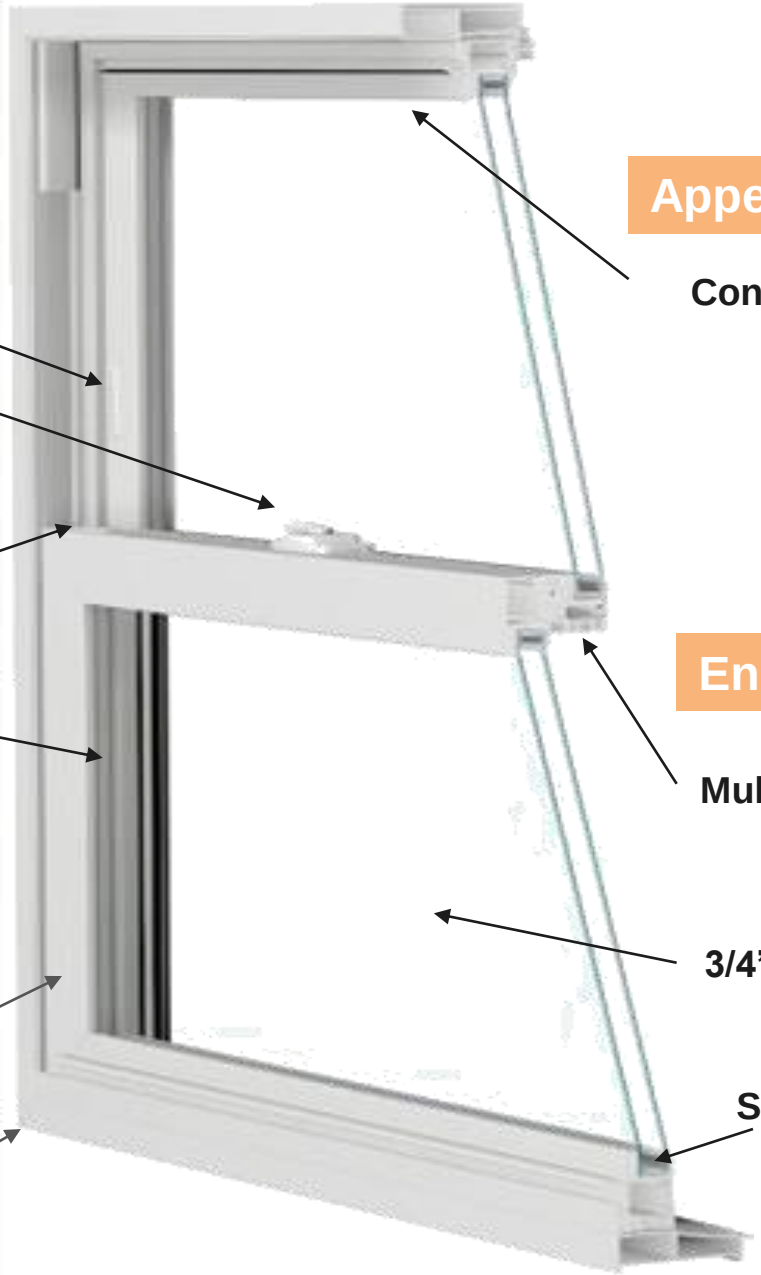

Appearance

Contoured Extruded Lift Rails

Energy Efficiency

Multiple Chambers Profile

3/4” Insulated Glass Unit

Supercept Spacer System

Simonton

6100

Colors

White

Tan

Grid Options

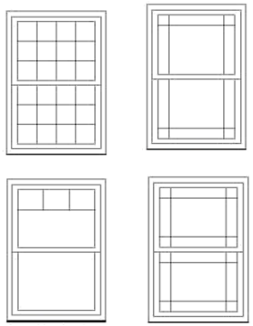

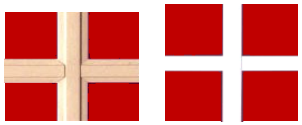

Sculptured

Flat

Styles

Double Hung

2 PNL Slider

3 PNL End Vent

Casement

Awning /Hopper

Picture

Shapes

Bay/Bow

Garden Window

Patio Doors

Glass Options

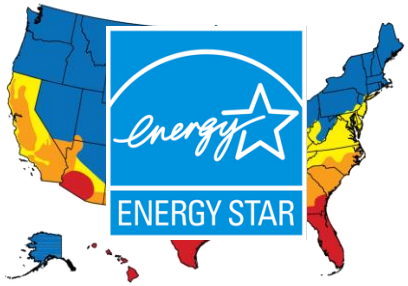

Obscure



WINDOW SPECIFICATION SHEET - Spec. Sheet #: F50030932 Sheet: 1 of 2

Customer: David Sanders Job #: F50030932 Consultant: Myles Meehan Date: 04/03/2025

ITEM #	Existing Window				New Window																						
							Measurements				Grids									Product Options	Labor Options	Hinge Locations From outside, Left to Right					
	Location						Color		Rough Opening					# of bars			# of bars					Bays, Bows Csmnts, 1 Pnl, use L, R or S				
	Room	Floor	Style Code	Wraps (Y/N)	Style Code	Series Code	Interior	Exterior	Width	Height	UI	Type (F, S, GBG)	Color	Pattern	Location	Vertical	Horizontal	Location	Vertical	Horizontal	Glass Hardware Screens Mull	Misc Items Code	For doors use "S" = stationary or "X" = operating				
1	LIV	1st	DH-HITILT	Y	DH	6100	WH	WH	29	54	83	S , GBG	WH,WH	C	ALL	2	1	ALL	2	1	STD, White, GlassPack: Standard	WRAP, LSR					
2	LIV	1st	DH-HITILT	Y	DH	6100	WH	WH	29	54	83	S , GBG	WH,WH	C	ALL	2	1	ALL	2	1	STD, White, GlassPack: Standard	LSR					
3	LIV	1st	DH-HITILT	Y	DH	6100	WH	WH	29	54	83	S , GBG	WH,WH	C	ALL	2	1	ALL	2	1	STD, White, GlassPack: Standard	LSR					
4	DINE	1st	DH-HITILT	Y	DH	6100	WH	WH	29	54	83	S , GBG	WH,WH	C	ALL	2	1	ALL	2	1	STD, White, GlassPack: Standard	LSR					
5	DINE	1st	DH-HITILT	Y	DH	6100	WH	WH	29	54	83	S , GBG	WH,WH	C	ALL	2	1	ALL	2	1	STD, White, GlassPack: Standard	LSR					
6	BATH	1st	DH-HITILT	Y	DH	6100	WH	WH	29	38	67	S , GBG	WH,WH	C	ALL	2	1	ALL	2	1	STD, White, TMP : Full, GlassPack: Standard	LSR					
7	BED1	1st	DH-HITILT	Y	DH	6100	WH	WH	29	54	83	S , GBG	WH,WH	C	ALL	2	1	ALL	2	1	STD, White, GlassPack: Standard	LSR					
8	BED1	1st	DH-HITILT	Y	DH	6100	WH	WH	29	54	83	S , GBG	WH,WH	C	ALL	2	1	ALL	2	1	STD, White, GlassPack: Standard	LSR					

Wrap Color	1: White, 2: White, 3: White, 4: White, 5: White, 6: White, 7: White, 8: White
Interior Casing Type	
Bay or Bow window:	
Seatboard material (vinyl only-Birch or Oak)	
Bay Project Angle (30 or 45)	
Bay Flanker Type (DH, SH, or Csmnt)	
Top of window to soffit (inches)	
If tied to soffit, color of soffit material	
Construct Roof (Yes or No) *	
Garden Window:	
Seatboard Material (vinyl only-White Pionite, Birch or Oak)	

SPECIAL CONSIDERATIONS:

Permit Processing

I have reviewed and agree with all the job specifications above and the Special Terms and Conditions on the following page

WINDOW SPECIFICATION SHEET - Spec. Sheet #: F50030932 Sheet: 2 of 2

Customer: David Sanders Job #: F50030932 Consultant: Myles Meehan Date: 04/03/2025

	Existing Window				New Window																						
							Measurements				Grids									Product Options	Labor Options	Hinge Locations From outside, Left to Right					
	Location						Color		Rough Opening					# of bars			# of bars					Bays, Bows Csmnts, 1 Pnl, use L, R or S				
ITEM #	Room	Floor	Style Code	Wraps (Y/N)	Style Code	Series Code	Interior	Exterior	Width	Height	UI	Type (F, S, GBG)	Color	Pattern	Location	Vertical	Horizontal	Location	Vertical	Horizontal	Glass Hardware Screens Mull	Misc Items Code	For doors use "S" = stationary or "X" = operating				
9	OFC	1st	DH-HITILT	Y	DH	6100	WH	WH	29	54	83	S , GBG	WH,WH	C	ALL	2	1	ALL	2	1	STD, White, GlassPack: Standard	LSR					
10	OFC	1st	DH-HITILT	Y	DH	6100	WH	WH	29	54	83	S , GBG	WH,WH	C	ALL	2	1	ALL	2	1	STD, White, GlassPack: Standard	LSR					
11	OFC	1st	DH-HITILT	Y	DH	6100	WH	WH	29	54	83	S , GBG	WH,WH	C	ALL	2	1	ALL	2	1	STD, White, GlassPack: Standard	LSR					
12	BED2	2nd	DH-HITILT	Y	DH	6100	WH	WH	29	46	75	S , GBG	WH,WH	C	ALL	2	1	ALL	2	1	STD, White, GlassPack: Standard	LSR					
13	BED2	2nd	DH-HITILT	Y	DH	6100	WH	WH	29	46	75	S , GBG	WH,WH	C	ALL	2	1	ALL	2	1	STD, White, GlassPack: Standard	LSR					
14	BATH	2nd	DH-HITILT	Y	DH	6100	WH	WH	29	46	75	S , GBG	WH,WH	C	ALL	2	1	ALL	2	1	STD, White, TMP : Full, GlassPack: Standard	LSR					
15	BED3	2nd	DH-HITILT	Y	DH	6100	WH	WH	29	46	75	S , GBG	WH,WH	C	ALL	2	1	ALL	2	1	STD, White, GlassPack: Standard	LSR					
16	BED3	2nd	DH-HITILT	Y	DH	6100	WH	WH	29	46	75	S , GBG	WH,WH	C	ALL	2	1	ALL	2	1	STD, White, GlassPack: Standard	LSR					

Wrap Color	9: White, 10: White, 11: White, 12: White, 13: White, 14: White, 15: White, 16: White
Interior Casing Type	
Bay or Bow window:	
Seatboard material (vinyl only-Birch or Oak)	
Bay Project Angle (30 or 45)	
Bay Flanker Type (DH, SH, or Csmnt)	
Top of window to soffit (inches)	
If tied to soffit, color of soffit material	
Construct Roof (Yes or No) *	
Garden Window:	
Seatboard Material (vinyl only-White Pionite, Birch or Oak)	

SPECIAL CONSIDERATIONS:

Permit Processing

I have reviewed and agree with all the job specifications above and the Special Terms and Conditions on the following page



























Historic Landmarks Commission
101 East Washington Street
Charles Town, WV 25414

Meeting: 07/14/25
Department: Historic Landmarks Commission
Category: Report
Initiator:

SCHEDULED

AGENDA ITEM (ID #)

Public Hearing: *COA2025-12* - 210 N. George St. - Signage

ATTACHMENTS:

- 1. Staff Report.pdf
- 2. Application.pdf
- 3. Design.pdf
- 4. Insurance.pdf

Certificate of Appropriateness
COA-2025-12

Date: For the July 14 2025 Historic Landmarks Commission Meeting
Applicant: Feeling Stabby LLC
Property Owner: NCP BELDEN LLC
Report by: James Newman, City Planner, Zoning/Subdivision Administrator
Proposal: Certificate of Appropriateness for a projecting sign
Property Location: 201 N. George St.
Current Zoning: Old Town Mixed Use Commercial (OT-MUC)

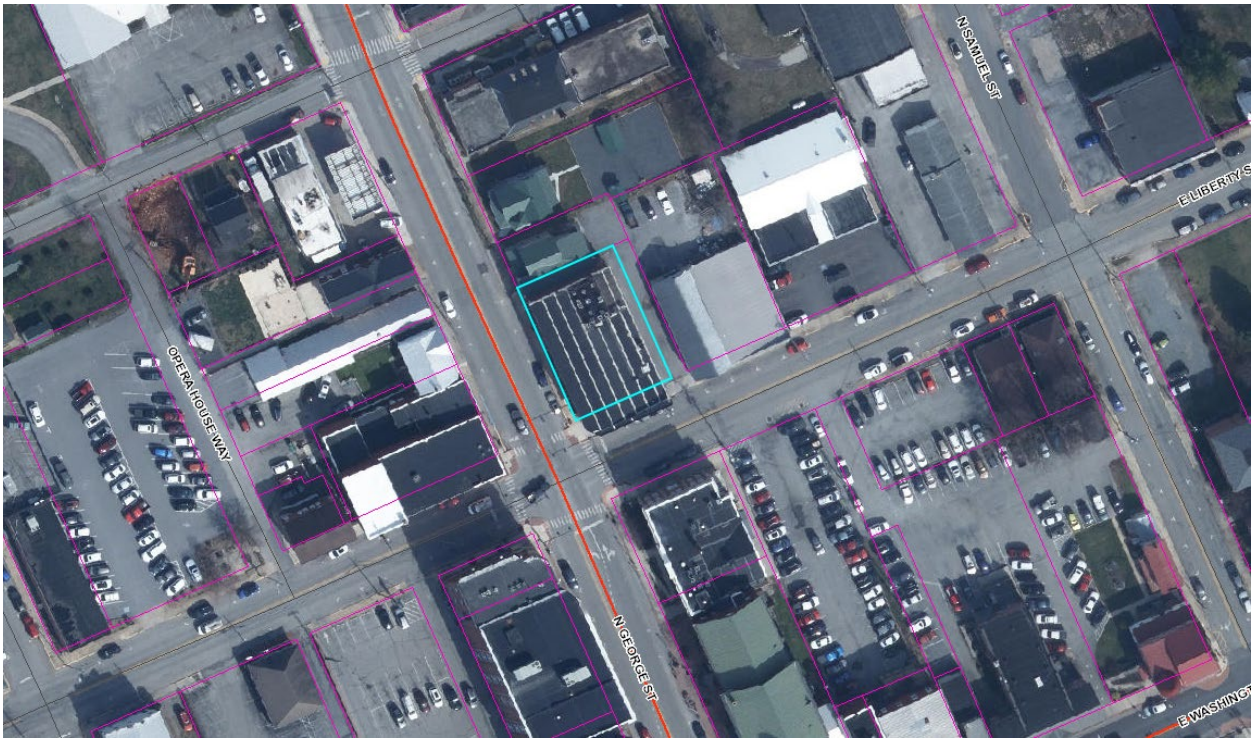

HISTORIC SURVEY BUILDING INFORMATION: Downtown Historic District.
Classical Revival, c. 1915-1920. Two story red brick commercial building. **Contributing**

PROPOSAL
Placement of a projecting sign

STRUCTURE VIEW

June 2021 – Google Streetview



DESIGN



Material: Polyvinyl chloride (PVC)
Height: 24 inches/ 2 ft.
Width: 20 inches/ 1.6 ft.
Area: 3.3 sq. ft.

ORDINANCE REQUIREMENTS

Projecting Sign: A Projecting or Suspended Sign shall include only the address and name of occupant

A Projecting or Suspended Sign shall not extend more than five (5) feet into the public right-of-way. In no case shall a Projecting or Suspended Sign be permitted to encroach over a motorized Vehicle travel way such as a public or private Street, alley, or Driveway. If such a Sign is suspended or projects above a public right-of- way, the issuance and continuation of a Sign Permit shall be conditioned on the sign owner obtaining, and maintaining in force, liability insurance in an amount of not less than $500,000 per occurrence per Sign. - Zoning Ordinance page 94.

Applicant has provided proof of insurance.

HISTORIC DISTRICT REQUIREMENTS

1. Lettering may be painted, carved into the wood, or individually mounted.
2. Plastic may be used if it is carefully designed and is fabricated with another finish.
3. Signs should be made in a professional manner.
4. Mass produced signs do not blend with the character of the historic district nor the overall streetscape, and as such, they are discouraged.
5. National franchise signs should be compatible with the building and streetscape.
6. Glossy backgrounds that reflect glare and reduce legibility should be avoided, unless the material is appropriate to the façade.

The sign complies with the Design Review Standards, and will not be lit.

STAFF RECOMMENDATION

Approval

COA Application No._____

CERTIFICATE OF APPROPRIATENESS APPLICATION

Fee: $60

No buildings, site or structure shall be moved or demolished until after an application for a certificate of appropriateness has been submitted to and approved by the Historic Landmarks Commission. All proposed activity must be approved by the Historic Landmarks Commission (HLC) via issuance of a Certificate of Appropriateness (COA).

Many of the activities for which a COA is required also requires building permit, which is a separate process from obtaining a COA.

RECEIVED
JUN 17 2025
BY: VB

COA Application No._____

1. DATE: 6/17/2025

2. APPLICANT'S NAME* Feeling Stabby LLC, DBA Miss Willa's Bookshop

Address: 201 N. George St Suite 102

Telephone Number: (571) 318-4010

Email Address: Malissa@MissWillasBookshop.com

Relationship to Owner: ☐ Lessee ☐ Contractor ☐ Architect ☐ Consultant

Other: Assistant

3. PROPERTY OWNER'S NAME Jennifer L. Armentrout

Address: 224 McMurran Farm Ln Shepherdstown, WV

Telephone Number: (304) 561-4767

Email Address: JLA@JenniferLArmentrout.com

*Applicants include: Property owner(s), Engineer(s), Surveyor(s), or Consultant(s)

4. LEGAL DESCRIPTION OF THE SUBJECT PROPERTY (List all parcels that apply)

Property Address: 201 N. George St Suite 102

Tax Map # and Parcel(s): _____

5. DESCRIPTION OF PROPOSED USE(S) OF THE PROPERTY

Bookstore

6. DESCRIBE THE CURRENT (or if vacant, former) USE OF THE SUBJECT PROPERTY

Under Construction - Bookstore

7. TYPE OF WORK:

A. ☐ Exterior alteration or repairs.

B. ☐ New Construction: 1) ☐ Primary Structure; 2) ☐ Garage; 3) ☐ New Addition; 4) ☒ Other;

C. ☐ Demolition: 1) ☐ Whole Structure: 2) ☐ Part of Structure;

D. ☐ Relocation of Structure

E. Other: Sign

8. City of Charles Town Business License # if work is being performed for a commercial use:

9. EXTERIOR ALTERATION OR REPAIR

A. **Check all that apply** for which approval of the proposed activity is requested:

☐ Architectural feature (decorative ornamentation)	☐ Metal trim	☐ Iron fences
☐ Material changes (wood, brick, metal, etc.)	☐ Windows - replacement, removal, elimination or new opening	☐ New construction
☐ Roof – Change in shape/profile	☐ Shutters	☐ Additions or alterations
☐ Skylights or dormers	☐ Door and transoms	☒ Signs
☐ Masonry - cleaning, tuckpointing, removal of masonry or other changes to the masonry	☐ Cut stone steps	☐ Solar panels
☐ Removal of historic markings and paintings	☐ Security Features	☐ Mothballing
☐ Wood cornices and concealed box gutters	☐ Porch or deck	☐ Demolition
☐ Wood trim	☐ Awnings and canopies	

B. **PROVIDE A NARRATIVE. List and describe in detail all work** to be done for each item checked. Include the following materials when appropriate:

1) Sketches, photographs, specifications, manufacturer's illustrations or other description of proposed changes to the building's exterior. Detailed drawings are required for major changes in architectural features.

2) If material changes are proposed, please provide a description of them. The architect's specifications or brochures may suffice; however, the Commission may request samples of new materials.

C. SIGNS:

1) Signage activities are regulated under Article 1324 (Signs) and Section 1322.13 (Historic Overlay District) of the City of Charles Town's Zoning Ordinance and by extension the Design Review Standards. **All permitted sign sizes, location of placement and additional sign standards are regulated by Article 1324 and shall meet those standards.**

(continued on next page)

D. NEW CONSTRUCTION: Describe the nature of the proposed project. Include the following materials when appropriate:

1) Site plan with measured distances.
2) Elevation drawings of each façade and specifications which clearly show the exterior appearance of the project.
3) Samples or other description of materials to be used.
4) Drawings or other description of site improvements such as fences, sidewalks, lighting, pavement, decks, etc.

E. DEMOLITION OF STRUCTURE

1) Describe the structure's condition and reason for demolition.
2) Additional criteria is found in the Design Review Standards, including the need to prove economic hardship.
3) Describe the proposed reuse of the site, including drawings of any proposed new structure or landscaping.

F. RELOCATION OF STRUCTURE

1) Explain what will be moved, why, and proposed changes.
2) If a building will be moved into a district from outside, include photographs.
3) Include a site plan of the proposed location in the district and describe any site features which will be altered or may be disturbed, including foundations, walls, vegetation, etc.

G. MOTHBALLING OF STRUCTURE

1) Describe how the structure will be secured from unwanted entry.
2) Describe measures to be taken to keep the weather and pest out.
3) If the property owner will not be in the state of West Virginia, designate a local contact.
4) If any door(s) or window(s) are to be boarded up, they must be painted to look like a door or window or decals that look like door and window must be adhered to the boards on the window or door.
5) Additional criteria is found in the Design Review Standards, including the need to prove economic hardship.
6) Describe how the property will be maintained so as to not become a code violation, such yard maintenance.

Signs

Estimated Cost of Signage (**Excluding** Labor & Installation):

$284.62

Sign Contractor:

Vital Signs Plus

Contractor License #: WV & City of Charles Town:

TYPE OF SIGN

Type of Sign	Check One	Type of Sign	Check One
Free Standing		Suspended	X
Building Mounted	X	Awning	
Window Lettering		Other (List)	

Where on the property or building will the sign(s) be located?

on brick 'Pillar' in front of Store

Sign Material:

PVC

SIGN DIMENSIONS:

Height	Width	Depth
24	20	-

WILL SIGN(S) BE LIT? If yes, describe the type of lighting to be used:

NO

PLEASE PROVIDE PROOF OF INSURANCE (In case of sign damage), and attach to this form.

PROVIDE AN ILLUSTRATION OR PHOTOGRAPH of the PROPOSED SIGN(S) and LOCATION.

APPLICANT CERTIFICATION

I certify that, to the best of my knowledge, the submitted information and statements are true and correct. I also certify that I have read the relevant provisions of the Charles Town Design Review Standards pertaining to this application, Section 1322.13, of the Zoning Ordinance and for a sign request, Article 1324 of the Zoning Ordinance.

Signature of Applicant

Melissa L Y _____ Date 6/17/2025

Signature of Property Owner(s) (If different than Applicant)

_____ Date 6/18/25

Please submit an original completed application to the following:

At City Hall:	Or	Via Mail:
Zoning Administrator City of Charles Town 101 E. Washington Street Charles Town, WV 25414		Zoning Administrator City of Charles Town PO BOX 14 Charles Town, WV 25414

CITY USE ONLY

Application Number:_____ Date Application Received:_____

Zoning District: _____

Fee: $_____ Paid: $_____ Check No._____

Receipt No._____

Historic Landmarks Commission Approval or Denial and date of action:

_____

Comments:_____

_____

_____

_____

PVC SIGN, 24"X20", 2 SIDED
$151.00 PLUS TAX

SCROLL BRACKET - $115

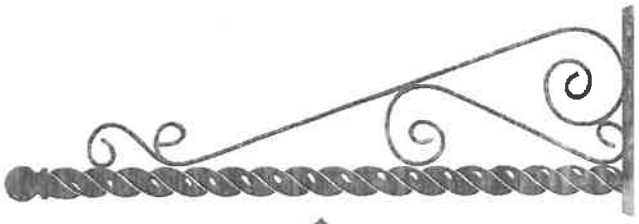

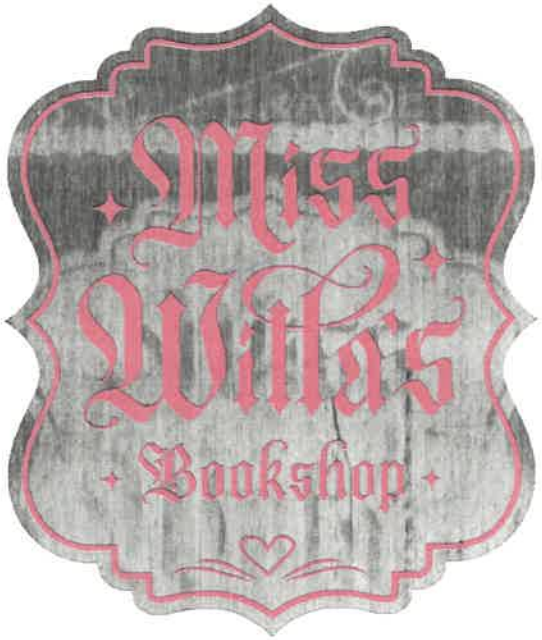

VITAL SIGNS plus
32 Federal Way
Charles Town, WV 2414
P: 304.728.7455
F: 304.725.3467
vsigns@frontiernet.net
www.vitalsignsplus.com

JOB ID
MISS WILLA'S
CUSTOMER
FEELING STABBY PROD.
LOCATION

SALESPERSON
SUZIE
ISSUE DATE
5/21/25
REVISIONS
1
2
3
4
5
6

DESIGNER
FILE PATH

APPROVED FOR PRODUCTION
_ Approved As Drawn
_ Approved As Noted
Revise & Resubmit
Date: _____
Client: _____
Sales: _____
PM: _____

©2015 Vital Signs Plus.
All rights reserved
This drawing and the designs, plans, layouts and accompanying information contained herein, are the sole property of Vital Signs Plus and may not be copied, recreated or distributed without the consent of Vital Signs Plus.

CERTIFICATE OF LIABILITY INSURANCE

DATE (MM/DD/YYYY): 06/18/2025

THIS CERTIFICATE IS ISSUED AS A MATTER OF INFORMATION ONLY AND CONFERS NO RIGHTS UPON THE CERTIFICATE HOLDER. THIS CERTIFICATE DOES NOT AFFIRMATIVELY OR NEGATIVELY AMEND, EXTEND OR ALTER THE COVERAGE AFFORDED BY THE POLICIES BELOW. THIS CERTIFICATE OF INSURANCE DOES NOT CONSTITUTE A CONTRACT BETWEEN THE ISSUING INSURER(S), AUTHORIZED REPRESENTATIVE OR PRODUCER, AND THE CERTIFICATE HOLDER.

IMPORTANT: If the certificate holder is an ADDITIONAL INSURED, the policy(ies) must have ADDITIONAL INSURED provisions or be endorsed. If SUBROGATION IS WAIVED, subject to the terms and conditions of the policy, certain policies may require an endorsement. A statement on this certificate does not confer rights to the certificate holder in lieu of such endorsement(s).

PRODUCER	CONTACT NAME: Todd Vandegriff
Smallwood Small Insurance 1250 Edwin Miller Blvd. Ste 301 Martinsburg WV 25404	PHONE (A/C, No, Ext): (304)263-3361 FAX (A/C, No): (304)263-3412 E-MAIL ADDRESS: tvandegriff@smallwoodsmall.com
INSURED Evaemon Properties, LLC 224 Mcmurran Farm Ln Shepherdstown WV 25443	**INSURER(S) AFFORDING COVERAGE** — **NAIC #** INSURER A : Erie Insurance Company — 26263 INSURER B : Erie Insurance Property and Casualty Co — 26830 INSURER C : INSURER D : INSURER E : INSURER F :

COVERAGES **CERTIFICATE NUMBER:** **REVISION NUMBER:**

THIS IS TO CERTIFY THAT THE POLICIES OF INSURANCE LISTED BELOW HAVE BEEN ISSUED TO THE INSURED NAMED ABOVE FOR THE POLICY PERIOD INDICATED. NOTWITHSTANDING ANY REQUIREMENT, TERM OR CONDITION OF ANY CONTRACT OR OTHER DOCUMENT WITH RESPECT TO WHICH THIS CERTIFICATE MAY BE ISSUED OR MAY PERTAIN, THE INSURANCE AFFORDED BY THE POLICIES DESCRIBED HEREIN IS SUBJECT TO ALL THE TERMS, EXCLUSIONS AND CONDITIONS OF SUCH POLICIES. LIMITS SHOWN MAY HAVE BEEN REDUCED BY PAID CLAIMS.

INSR LTR	TYPE OF INSURANCE	ADDL INSD	SUBR WVD	POLICY NUMBER	POLICY EFF (MM/DD/YYYY)	POLICY EXP (MM/DD/YYYY)	LIMITS	
A	X COMMERCIAL GENERAL LIABILITY CLAIMS-MADE X OCCUR GEN'L AGGREGATE LIMIT APPLIES PER: X POLICY PRO-JECT LOC OTHER:			Q61-0480048	11/27/2024	11/27/2025	EACH OCCURRENCE DAMAGE TO RENTED PREMISES (Ea occurrence) MED EXP (Any one person) PERSONAL & ADV INJURY GENERAL AGGREGATE PRODUCTS - COMP/OP AGG	$ 1,000,000 $ 1,000,000 $ 5,000 $ 1,000,000 $ 2,000,000 $ 2,000,000
	AUTOMOBILE LIABILITY ANY AUTO OWNED AUTOS ONLY HIRED AUTOS ONLY SCHEDULED AUTOS NON-OWNED AUTOS ONLY						COMBINED SINGLE LIMIT (Ea accident) BODILY INJURY (Per person) BODILY INJURY (Per accident) PROPERTY DAMAGE (Per accident)	$ $ $ $
B	X UMBRELLA LIAB X OCCUR EXCESS LIAB CLAIMS-MADE DED RETENTION $			Q35-7770042	11/27/2024	11/27/2025	EACH OCCURRENCE AGGREGATE	$ 1,000,000 $ 1,000,000
	WORKERS COMPENSATION AND EMPLOYERS' LIABILITY ANY PROPRIETOR/PARTNER/EXECUTIVE OFFICER/MEMBER EXCLUDED? Y / N (Mandatory in NH) If yes, describe under DESCRIPTION OF OPERATIONS below	N / A					PER STATUTE OTH-ER E.L. EACH ACCIDENT E.L. DISEASE - EA EMPLOYEE E.L. DISEASE - POLICY LIMIT	$ $ $

DESCRIPTION OF OPERATIONS / LOCATIONS / VEHICLES (ACORD 101, Additional Remarks Schedule, may be attached if more space is required)

Informational Purposes Only

CERTIFICATE HOLDER

Informational Purposes Only

CANCELLATION

SHOULD ANY OF THE ABOVE DESCRIBED POLICIES BE CANCELLED BEFORE THE EXPIRATION DATE THEREOF, NOTICE WILL BE DELIVERED IN ACCORDANCE WITH THE POLICY PROVISIONS.

AUTHORIZED REPRESENTATIVE
Todd Vandegriff

Fax: Email:

© 1988-2015 ACORD CORPORATION. All rights reserved.
The ACORD name and logo are registered marks of ACORD

Historic Landmarks Commission
101 East Washington Street
Charles Town, WV 25414

Meeting: 07/14/25
Department: Historic Landmarks Commission
Category: Report
Initiator:

SCHEDULED

AGENDA ITEM (ID #)

Public Hearing: *FIP2025-02* - 117-119 W. Washington St. - Grant request

ATTACHMENTS:

- 1. Staff Report.pdf
- 2. Application.pdf
- 3. Quote 1.pdf
- 4. Quote 2.pdf
- 5. Quote 3.pdf
- 6. Bid Narrative.pdf
- 7. Paint Choices.pdf

Façade Improvement Grant
FIP 2025-02

Date: For the July 14, 2025 Historic Landmarks Commission meeting
Applicant: Ron Widmyer
Property Owner: WIDMYER TODD S ET AL
Report by: James Newman, City Planner, Zoning/Subdivision Administrator
Proposal: Façade Improvement Grant
Property Location: 117-119 W. Washington St.
Current Zoning: Old Town Mixed Use Commercial

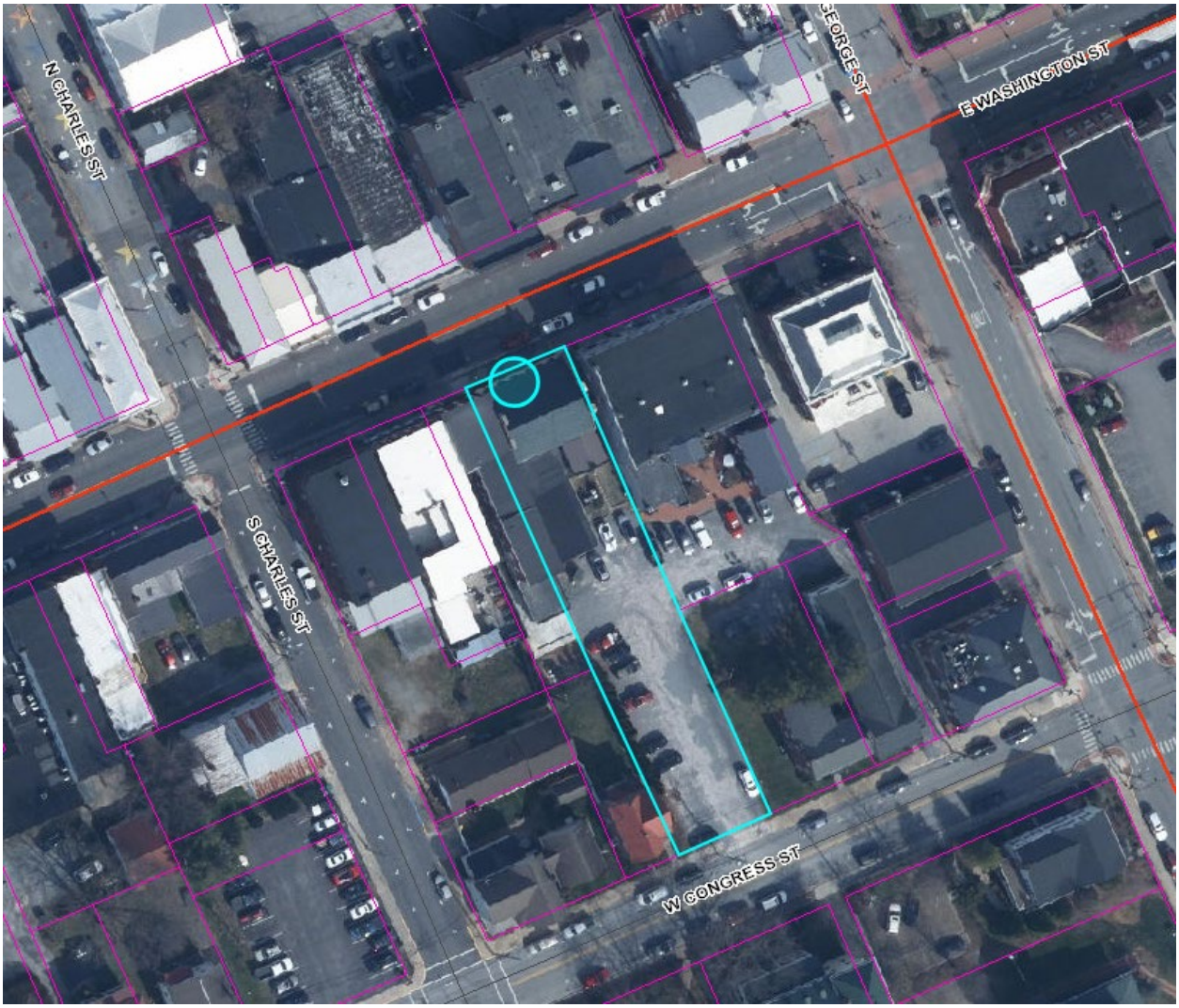

HISTORIC SURVEY BUILDING INFORMATION: Federal, c. 1820s. This brick building is six bays wide with Flemish bond facade and parapets with double inside-end chimneys. **Contributing.**

FUNDING MECHANISM

Property owners or tenants who choose to participate in this program are eligible to receive financial assistance, in the form of a 50/50 funds match, up to $5,000.00 Any work completed prior to formal written approval will not be eligible for funding.

PROPOSAL

A request for up to $5,000 with a Façade Improvement Grant. Applicant seeks reimbursement for:

- *Trim: Painting and repair*
- *Windows: Painting and repair*
- *Masonry: Painting and repair*

ORDINANCE REQUIREMENTS

No applicable ordinance requirements.

STRUCTURE VIEW

Staff photographs:




KEYS-SAFES LOCKSMITH
2025/07/01 08:50:27


LOCKSMITH
KEYS-SAFES
CHARLES TOWN
LOCK & KEY
COMPLETE LOCKSMITH SERVICE
728-4346
24 HOUR EMERGENCY SERVICE
10 MINUTE TAKE-AWAY PARKING
8AM-8PM DAILY
2025/07/01 08:50:30



GRANT REQUIREMENTS

A. Policy for Two Bids:

1. Two Bids will be required for any application submission.
2. If the work is to be completed by the property owner, verification of expenses by a bid or a site such as homewyse.com will be required.

B. Application Process:

Each applicant will be eligible to apply for up to $5,000.00 each fiscal year. In order to be considered for a Façade Improvement Program 50/50 matching grant, the property owner and tenant shall complete the following tasks:

1. Review the Design Review Standards, including eligible and ineligible projects.

2. Complete and submit the Certificate of Appropriateness Application and Façade Improvement Program Application.

3. Submit before and after sketches, photographs, or other illustrations and a written, detailed description of the project to be considered for the matching grant.

4. Complete the property owner's or tenant's 50% matching portion of the estimated project cost and submit proposed/estimated cost. Bids must be provided if the work is being done by a contractor.

QUOTES

The applicant has provided three quotes:

1. B & G Painting: $4,900 (does not include sales tax nor paint sold to customer) --- Grant award: $2,450
2. B & M Painting: $11,398.78 --- Grant award: $5,000. Applicant has rejected this bid due to errors by the contractor (see attachment 'Bid Narrative')
3. Rankin Painting: $3,845 --- Grant award: $1,922.50

For paint, applicant proposes to use:

-Panhandle Paints in stock & available – Benjamin Moore on rt. 340 east of town

US MSRY Elast LL-P/B Mix #1523 named Embassy Green $60.18/gal

Recommended at about 100 sq ft / gal spread rate

-Panhandle Paints in stock 1 gal HP3310.9X HP DTM ACRY ENSG CLR BASE $70.30

Essex Green (DTM is "Direct to Metal") for spouting and trim of 6 windows

-Panhandle Paints in stock 1 gal Ultra Exit Satin White $48.80

The combined paint cost based on this quote is $600.54 (see attachment 'Paint Choices'. The grant will cover up to $5,000 of combined labor and materials costs that the applicant is able to receipt for.

AVAILABLE FUNDS

$15,000 dollars remain available in the fund.

STAFF RECOMMENDATION

Approval.

The Commission may approve, approve with conditions, table, or deny the request.

CITY OF CHARLES TOWN
FAÇADE IMPROVEMENT PROGRAM

APPLICATION

Applicant's Name: Ron Widmyer
Date: 03 / 23 / 2025

Company Name: Soldier Block
Phone: 304 - 279 - 4421

Mailing Address: 1434 Cattail Run Road
Charles Town, WV. 25414
Fax:

E-mail: rwidmyer@gmail.com

Project Address: 117-119 W. Washington Street, Charles Town, WV 25414
"Roser Building"

Have you received rebates from the City's Façade Improvement Program in the past 12 months? ☐ Yes ☒ No

Is this property:

New construction?	☐ Yes	☒ No
Government-owned property?	☐ Yes	☒ No
A national franchise?	☐ Yes	☒ No

Description of the Façade Improvement project:

Painting of exterior facade of 117-119 W. Washington Street Charles Town. It includes scraping + caulking as required and two coats of paint from above overhang to sporting line, a distance of ~ 16 ft by 50 ft. 6 windows frames and their sills must also be painted.

Estimated Project Start Date: 08 / 01 / 2025
Estimated Project End Date: 08 / 04 / 2025

Estimated Total Project Budget:

Grant Amount Requested:

The following items are included with this application:

- ❑ Before/after sketches or photographs or illustrations
- ❑ Detailed proposal and/or contractor estimates

I have reviewed the following documents, as they pertain to my application:

- ❑ Codified Ordinances of the City of Charles Town
- ❑ Charles Town Historic Landmarks Commission Design Review Standards
- ❑ Façade Improvement Program Manual

<u>If the application and request is approved, the following will be required</u>:

- Apply for and obtain all necessary permits. Painting requires no permits
- Submit receipts/invoices to the City once the project is complete.
- City inspection of improvements to ensure compliance with the COA and intended outcomes based on the funding application submittal.

I agree that the information provided above and within is accurate and correct to the best of my knowledge. I also assure that the property listed is in compliance with all laws, ordinances, rules, and regulations of the State of West Virginia and the City of Charles Town.

Property Owner's Printed Name: Ronald L Widmyer

Property Owner's Signature: RL Widmyer

Date of Application: 03-24-2025

Tenant's Signature: Maria Bauserman - Spotlight - 119 W Washington St
(If tenant is undertaking the proposed work)

Tenant's Printed Name: Tina Corona Lock and Key - 117 W Washington St

COA Application No._____

CERTIFICATE OF APPROPRIATENESS APPLICATION

ZONING ORDINANCE SECTION 1322.13, HISTORIC OVERLAY DISTRICT
AND
ARTICLE 141 OF THE CHARLES TOWN CODIFIED ORDINANCE
AND
DESIGN REVIEW STANDARDS

All proposed activity must be approved by the Historic Landmarks Commission (HLC) via issuance of a Certificate of Appropriateness (COA).

Many of the activities for which a COA is required also requires building permit, which is a separate process from obtaining a COA.

If applying for the Façade Improvement Program, the "Addendum – Façade Improvement Program" will be required in addition to this application.

1. APPLICANT'S NAME Ron Widmyer

Address: 1434 Cattail Run Road, Charles Town, WV

Telephone Number: (304) 279 4421 Fax Number ( )

Email Address: RWidmyer@gmail.com

Relationship to (Owner) ___Lessee ___Contractor ___Architect ___Consultant ____Other:
(explain) I am the owner

2. CURRENT PROPERTY OWNER'S NAME Ronald Widmyer

Address: 1434 - Cattail Run Road, Charles Town, WV. 25414

Telephone Number: (304) 279-4421 Fax Number ( )

Email Address: rawidmyer@gmail.com

3. PHYSICAL ADDRESS: 117 & 119 W. Washington St Charles Town

Tax Map # and Parcel(s): 1 Lt Washington + Congress Street / parcel 23 0033

Zoning District: Downtown Historic district

4. DESCRIPTION OF FORMER USE(S) OF THE PROPERTY

Depart

5. DESCRIBE THE CURRENT OR PROPOSED USE OF THE SUBJECT PROPERTY

Lock + Key

1

6. TYPE OF WORK:

A. None Exterior alteration or repairs. but scraping + caulking

B. None New Construction: 1) No Primary Structure; 2) No Garage;
3) No New Addition; 4) No Other;

C. None Demolition: 1) No Whole Structure; 2) No Part of Structure;

D. None Relocation of Structure

7. EXTERIOR ALTERATION OR REPAIR

A. Check all that apply for which approval of the proposed activity is requested.

caulking + painting plus 2 coats of paint

not applicable

____Architectural feature (decorative ornamentation)	____Metal trim	____Iron fences
____Material changes (wood, brick, metal, etc.)	____Windows - replacement, removal, elimination or new opening	____New construction
____Roof – Change in shape/profile	____Shutters	____Additions or alterations
____Skylights or dormers	____Door and transoms	____Signs
____Masonry - cleaning, tuckpointing, removal of masonry or other changes to the masonry	____Cut stone steps	____Solar panels
____Removal of historic markings and paintings	____Security Features	____Mothballing
____Wood cornices and concealed box gutters	____Porch or deck	____Demolition
____Wood trim	____Awnings and canopies	

B. List and describe in detail all work to be done for each item checked. Include the following materials when appropriate:

1) Sketches, photographs, specifications, manufacturer's illustrations or other description of proposed changes to the building's exterior. Detailed drawings are required for major changes in architectural features.
2) If material changes are proposed, please provide a description of them. The architect's specifications or brochures may suffice; however, the Commission may request samples of new materials.

C. SIGNS:

1) See page 6 of this application for more information.
2) Signage activities are regulated under Article 1324 (Signs) and Section 1322.13 (Historic Overlay District) of the City of Charles Town's Zoning Ordinance and by extension the Design Review Standards. **All permitted sign sizes, location of placement and additional sign standards are regulated by Article 1324 and shall meet those standards.** The HLC role is to review the sign for appropriateness within the Historic Overlay District.

D. NEW CONSTRUCTION: Describe the nature of the proposed project. Include the following materials when appropriate:

1) Site plan with measured distances.
2) Elevation drawings of each façade and specifications which clearly show the exterior appearance of the project.
3) Samples or other description of materials to be used.
4) Drawings or other description of site improvements such as fences, sidewalks, lighting, pavement, decks, etc.

N/A done

E. DEMOLITION OF STRUCTURE

1) Describe the structure's condition and reason for demolition.
2) Additional criteria is found in the Design Review Standards, including the need to prove economic hardship.
3) Describe the proposed reuse of the site, including drawings of any proposed new structure or landscaping.

N/A none

F. RELOCATION OF STRUCTURE

1) Explain what will be moved, why, and proposed changes.
2) If a building will be moved into a district from outside, include photographs.
3) Include a site plan of the proposed location in the district and describe any site features which will be altered or may be disturbed, including foundations, walls, vegetation, etc.

N/A none

G. MOTHBALLING OF STRUCTURE

1) Describe how the structure will be secured from unwanted entry.
2) Describe measures to be taken to keep the weather and pest out.
3) If the property owner will not be in the state of West Virginia, designate a local contact.
4) If any door(s) or window(s) are to be boarded up, they must be painted to look like a door or window or decals that look like door and window must be adhered to the boards on the window or door.
5) Additional criteria is found in the Design Review Standards, including the need to prove economic hardship.
6) Describe how the property will be maintained so as to not become a code violation, such yard maintenance.

DESCRIPTION OF THE PROPOSED ACTIVITY:

Scrape existing paint job walls & window trim. paint walls & window trim above overhang. up to spotting paint edge of overhang.

Using Same colors

CERTIFICATION

I certify that, to the best of my knowledge, the submitted information and statements are true and correct. I also certify that I have received and read Article 1324, Section 1322.12, of the Zoning Ordinance and relevant provisions of the Charles Town Design Review Standards pertaining to this application.

Signature of Applicant

_____ Date 3-24-2025

Signature of Property Owner

_____ Date 3-24-2025

Please submit an original completed petition to the following:

Zoning Administrator
City of Charles Town
101 E. Washington Street
Charles Town, WV 25414

Signs – Additional Information

ESTIMATED COST OF SIGN(S) (Excluding Labor & Installation):

_____

SIGN CONTRACTOR:

_____

Contractor License #: WV & City of Charles Town:

_____

TYPE OF SIGN

Type of Sign	Check One	Type of Sign	Check One
Free Standing		Suspended	
Building Mounted		Awning	
Window Lettering		Other (List)	

Where on the property or building will the sign(s) be located?

_____

SIGN MATERIAL:

_____

SIGN DIMENSIONS:

Height	Width	Depth

WILL SIGN(S) BE LIGHTED? If yes, list the type of lighting to be used:

_____

PLEASE PROVIDE PROOF OF INSURANCE (In case of sign damage) Insurance Company:

_____

PROVIDE AN ILLUSTRATION OR PHOTOGRAPH OF THE PROPOSED SIGN(S)

FOR CITY USE ONLY

Application Number:_____ Date Application Received:_____

Zoning District: _____

Fee: $_____ Paid: $_____ Check No._____

Receipt No._____

Zoning Administrator Approval:_____ Date:_____

Historic Landmarks Commission Approval:_____Date:_____

Comments:_____

_____

_____

_____

_____

_____

Grant Approval Agreement

1. **I understand that grant monies shall not be distributed until all proposed work is completed and inspected.**

2. **I understand that I have to provide receipts related to the project. If a contractor was used, a written invoice must be provided to the City before funds will be granted. For projects that involve a contractor, receipts and invoices must be accompanied by proof of payment (i.e. cancelled checks). If a contractor was not used, receipts must be provided to the City Staff before a reimbursement will be issued. Only materials may be reimbursed for projects that do not use a contractor. Receipts and invoices must be accompanied by proof of payment (i.e. cancelled checks).**

3. **I understand that an inspection of the project must be performed by City staff upon completion of the project.**

4. **I agree to follow the plan submitted with the application and I understand that failure to do so may disqualify the project for grant funding.**

5. **I agree to all of the attached "Conditions of Approval", if any, as developed by the Historic Landmarks Commission.**

6. **I agree to complete all improvements within one year of approval from the Historic Landmarks Commission. Any time extension must be filed and approved by the Historic Landmarks Commission.**

Property Owners Signature _____ **Date** _____

estimate #1 received 6-4-2025

B&G Painting LLC
P.O. Box 75
Rippon, WV 25441
304-725-9525

Ron Widmeyer
Washington Street
Charles Town, WV

JOB : Estimate on painting buildings #117 & #119
Fronts Only

- To apply one coat of DTM To half round gutter and short piece of downspout (inside & outside)
- To apply one coat of Elastameric paint to old brick & stucco above overhang
- To paint one coat of finish to facial edge of overhang
- To apply one coat of paint to 6 windows outside trim & window sill.
- Price does not include removing plexiglass or inside of windows

Price for labor	$4600.00
Estimated price for materials	$300.00

Sales Tax 7% to be added
Paint to be sold to customer at contractors cost

Robert Gray ph: 304-725-9525
B&G Painting
WV002385

B & M PAINTING INC

estimate #2 received 4-4-25

Estimate

92 EAST BURR BLVD
KEARNEYSVILLE, WV 25430

DATE	ESTIMATE NO.
4/4/2025	9962

NAME / ADDRESS
Ron Widmyer 1434 Cat Tail Run Road Charles Town, WV. 25414

PROJECT

DESCRIPTION	QTY	COST	TOTAL
EXTERIOR PREP AND PAINTING 117 & 119 WEST WASHINGTON STREET			
Scope of Work			
Cover sidewalk with 6 mil plastic and attach to foundation to contain any paint being removed.			
Scrape and hand sand areas listed to remove any loose and flaking paint.			
Apply 1 coat of Ben Moore Fresh Start Primer on surfaces listed with brush and rollers for masonry areas.			
Remove Plexiglass from 6 windows to have access to window sashes.			
Scrape and hand sand window sashes to remove any loose and flaking paint.			
Apply 1 coat of Ben Moore Fresh Start Primer on sashes and allow 24 hours drying time.			
Apply 1 coat of Ben Moore STIX Bonding Primer on PVC downspouts.			
Allow 24 hours drying time then apply 2 coats of Ben Moore Regal High Build Soft Gloss on all surfaces Listed allowing 24 hours between coats.			
Pricing			
Prep (Scraping & Sanding)	84	46.88	3,937.92T
Plastic/Duct Tape	1	185.42	185.42T
Fascia Area	50	5.64	282.00T
Brick & Masonry (above canonry)	772	5.36	4,137.92T
Down Spouts	31	4.60	142.60T
6 Over 6 Windows	6	312.00	1,872.00T
Payment: In full within 30 days from completion			
Accepted & Date			
		TOTAL	

not requested

not requested.

No work!

B & M PAINTING INC

92 EAST BURR BLVD
KEARNEYSVILLE, WV 25430

Estimate

DATE	ESTIMATE NO.
4/4/2025	9962

NAME / ADDRESS
Ron Widmyer 1434 Cat Tail Run Road Charles Town, WV. 25414

PROJECT

DESCRIPTION	QTY	COST	TOTAL
2% City Tax	1	195.71	195.71T
W.V. sales Tax		6.00%	645.21
		TOTAL	$11,398.78

estimate #3 received (4-7-2025)

Rosen estimate

Rankin PAINTING

WV License#057478

DATE: APRIL 7, 2025
INVOICE # 250407

Rankin Painting
620 Mordington Ave.
Charles Town, WV 25414
304-728-8063
RankinPainting304@gmail.com

TO Ron Widmyer
117 & 119 W Washington St.
Charles Town, WV 25414
304-279-4421
rwidmyer@gmail.com

SALESPERSON	JOB	PAYMENT TERMS	DUE DATE
Christine van Delden	117 & 119 W Washington St.	Due On Receipt	Due Upon Completion

QTY	DESCRIPTION	UNIT PRICE	LINE TOTAL
	Light Scrape of Loose/Chipping Paint. Caulk Gaps and Any Cracks. Paint Upper Brick, Stucco, 6 Window Frames and 2 Vents. Paint Lower Fascia Board-No Soffits and 2 Entry Ceilings		3,200.00
	Sherwin Williams Conflex Sherlastic Elastomeric Coating and Materials		645.00
		TOTAL	**$3,845.00**

You can expect this job to be completed in approximately 2-3 consecutive business days.

- Might be Oct to execute
- Christine honored quote of 4-7 on 6-5

Terms and Conditions:

Scope of Work:

Rankin Painting will provide to the client the services as described in the attached proposal which is hereby incorporated into this contract as a reference. Rankin Painting will provide all services, material (unless specified), labor, tools, and equipment needed for completion of services in the quote at the address listed above. All services will be in compliance of local codes and company agrees to provide professional quality services according to acceptable industry standards and practices. Rankin Painting can provide company credentials upon request. i.e. contractor's license, insurance, certifications and business registration certificate.

Payment Terms:

For projects over $5,000.00 a 1/3 deposit will be due upon signing of agreement or on first day of starting project, the remaining balance or total balance (if no deposit) will be due at completion of job. For credit card payments a 3.7% processing fee will be added to total amount due. If for any reason, the project is delayed beyond the control of the company due to unforeseen issues with the property, natural disaster, or client circumstances the client agrees to pay Rankin for the work completed until a new schedule is agreed upon by both parties. Payment is the responsibility of the client and is due at completion of work. Client agrees to pay a late charge of 2.5% per month on all balances unpaid after 3 days of job completion date.

Change Order:

Any deviation from the above Scope of Work involving a change in the scope of work or any additional costs will be executed only with a written change order signed and dated by both the company and client.

Other Terms:

Rankin Painting will not be responsible for client's color choices or keeping a log of colors used in previous projects, due to potential error. Potential error-clients color mistake or paint not mixed correctly at a paint store. Our company strictly paints and does not make paint or own equipment to mix paint.

Foundation Sealing $350.00 Minimum Charge

Bucket Truck $300.00 Minimum Charge

Warranty:

Rankin Painting warrants all work will be performed in a good and workmanlike manner. If a failure occurs such as missed or touch up needs, we will come back and fix failed area and homeowner will not incur any additional charges. All materials used in the project will be new and of good quality; and all work will be completed as defined in the scope of work outlined in the accepted agreement. We at Rankin Painting will guarantee any natural chipping, peeling, cracking, and/or fading of paint for six months. *Epoxy floors and concrete staining not included in warranty.

Conditions:

This proposal is valid for at least 30 days. Rankin Painting reserves the right to withdraw this proposal or re-quote the project if contract acceptance is beyond 30 days. Reschedules should be made 1 week prior to start day and no later than 48hrs before start date.

√ You must sign this agreement in order to secure a start date. By signing this agreement, I acknowledge that I have read and understand the terms and conditions of this proposal.

Customer Signature: _____

Review of 3 bids to paint (117 + 119 W West St) of Sadler Block

est #

1. B+G Painting LLC : $4,900 + Sales Tax 7% (received 6-4-2025)
correctly estimated, correctly done, ie mathis are as requested.

X 2. B+M Painting : ($11,398.28) dated: April 4, 2025 receipt
Painter is quoting extra labor to do all of windows remove Abrigles + paint all of windows! not requested! Using 3 coats of paint total + not requested paint is elastomeric!
Bid was rejected! I contacted company and left message of errors in quotes weeks ago. There was no response! It looked for another Bid.

✓ 3. Rankin Painting $3945.00 no taxes included, (received April 7, 2025)
elastomeric paint is quoted. ✓
other painting is correctly listed. ✓

Note: The estimate is old. I have contacted Rankin Painting to see if they still are interested in job. Left message 6-4-2025.

✓ Talked with Rankin Painting 6-5-2025. They will honor quote of April 7. Exchanged Widmyer Paint Research included in this application for their use if applicable.

owners opinion

* Current Paint for old brick of quoted Building (Rosen Bldg) is Elastomeric Paint. The rubberized paint goes on very thick and heavy with 1 coat, It seals the old mortar + soft brick with 1 coat. I have extensive experience with this material on my own old house. 1 coat is all that is needed.
* Paint color selected shown. I will include this with Rankin Painting if they contact me, They are using the same paint but with Sherwin Williams in April.

Date: 5-13-2025

~~Extra Copy~~ Original

Paint selection:

Research suggested Elastomeric paint to best seal old masonry buildings. Vendors concurred with research.
Paint chips were presented to select same color for paints from vendors
2 vendors were approached:

→ -Panhandle Paints in stock & available – Benjamin Moore on rt. 340 east of town

US MSRY Elast LL-P/B Mix #1523 named Embassy Green $60.18/gal

Recommended at about 100 sq ft / gal spread rate

-Panhandle Paints in stock 1 gal HP3310.9X HP DTM ACRY ENSG CLR BASE $70.30

Essex Green (DTM is "Direct to Metal") for spouting and trim of 6 windows

-Panhandle Paints in stock 1 gal Ultra Exit Satin White $48.80

-Sherwin Williams in stock & available – Sherwin Williams near Martins

6510-32807 16 LXN XP EW color SW7543 Avenue Tan $98.99 shelf price

30% discounted $69.29/gal

Recommended at about 200 sq ft/gal spread rate

Conclusions:
In the reality of application, the spread rates are about same of elastomeric paint.
Contractors can likely purchase either of 2 paints for near same price
Select Panhandle paint as Sherwin Williams quote is not discounted guaranteed.
Otherwise purchase of either paint is satisfactory, but Panhandle is my pick

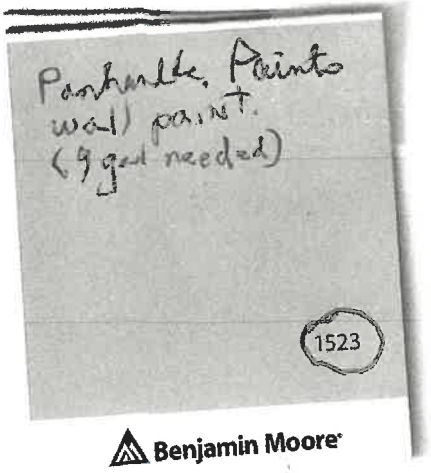

Note: Chip for "Essex Green" DTM Not Shown



chip from wall 117 W. Washington

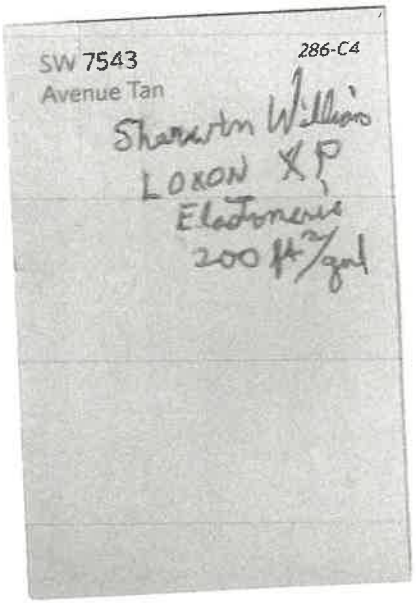

FROM

Panhandle Paints - Harpers Ferry
99 Cary Lu Circle Suite 100
Harpers Ferry WV 25425
Phone: (304) 728-6656 Fax: (304) 728-3646

Quotation

Number	Date	Page
P0046437	5/13/2025	1

SOLD TO

1410
Federal Hill Farm
1434 Cattail Run Road
Charles Town WV 25414

Phone	Fax	Clerk	Terms	PO Number	Valid Until	Delivery
(304) 725-9141		CRF	2/10 Net 30 Days		6/27/2025	Pick Up

Item Number	Description	Quantity	U/M	Tax	Unit Price	Extension
03601X-001	US MSRY ELAST LL -P/B Mix #: 1523 Name: Embassy Green wall paint quote	8	GAL	N	60.18	481.44

Total Discount Savings $128.00

RECEIPT NEEDED FOR REFUND OR EXCHANGE.
20% RESTOCKING FEE ON SPECIAL ORDERS & SIKKENS/PROLUXE.
TINTED PRODUCTS NOT RETURNABLE.
QUOTATION GOOD FOR 60 DAYS ONLY

SubTotal	$481.44
Sales Tax	$0.00
Total	**$481.44**

P0046437

Accepted By : _____

Print Name : _____

FROM

Panhandle Paints - Harpers Ferry
99 Cary Lu Circle Suite 100
Harpers Ferry WV 25425
Phone: (304) 728-6656 Fax: (304) 728-3646

Quotation

Number	Date	Page
P0046453	5/14/2025	1

SOLD TO

1410
Federal Hill Farm
1434 Cattail Run Road
Charles Town WV 25414

Phone	Fax	Clerk	Terms	PO Number	Valid Until	Delivery
(304) 725-9141		CRF	2/10 Net 30 Days		6/28/2025	Pick Up

Item Number	Description	Quantity	U/M	Tax	Unit Price	Extension
HP3310.9X.1	1G HP3310.9X HP DTM ACRY ENSG CLR BASE · Essex Green	1	GAL	N	70.30	70.30
N44801-001	ULTRA SPEC EXT SATIN WHITE DTM 'Direct to Metal'	1	GAL	N	48.80	48.80

Total Discount Savings $31.66

RECEIPT NEEDED FOR REFUND OR EXCHANGE.
20% RESTOCKING FEE ON SPECIAL ORDERS & SIKKENS/PROLUXE.
TINTED PRODUCTS NOT RETURNABLE.
QUOTATION GOOD FOR 60 DAYS ONLY

SubTotal	$119.10
Sales Tax	$0.00
Total	**$119.10**

P0046453

Accepted By : _____

Print Name : _____

TRANSACTION ENTRY | POINT-OF-SALE | VERSION: 3114

Employee: Johnson,James | Store: 705249 Term: 13481 Tran: 64466
Trans: SALE | Tax Xcpt:

Acct No: 1 - - D.I.Y.
Job No:
PRC: 1 WALK-IN
Customer: 1 D.I.Y.
Terr: 800100 HOUSE
CAC: 1111 D.I.Y./CONSUMER

ACTIVE KEYS
Comments | Price Source
Line Discount | Tax Exception
Total | Suspend

SALES NUMBER	SZ	DESCRIPTION	QTY	PRICE	EX PRICE T
6510-32807	16	LXN XP EW	9.00	98.99	890.91
		Discount (% 30.00)			-267.27
**********		Pricing Accommodation			
Color SW7543		AVENUE TAN			
			0.00	0.00	0.00

SUB-TOTAL: 623.64 TAX: 37.42 TOTAL: 661.06

Enter SALES/CLASS/PRODUCT NUMBER or Enter for NON-MERCHANDISE MENU

30% off pricing

Insert

Sherwin Williams

c3 98.99 .70 69.29 30

ADD ORDER ENTRY VERSION: 3114

Ctl #: 0151395 Type: Store Entered Order: OE0151395A705249 Entry Dt: 05/13/25
Customer P.O. #: Customer Order Job #:
Service Options: None Employee: 54 Johnson,James

Acct No: 1 - - D.I.Y. Tax Xcpt:
Job No: 0
PRC: WALK-IN
Customer: 1 D.I.Y.
Terr: 800100 HOUSE Contract Job: Non Contract Job
CAC: 1111 D.I.Y./CONSUMER Email:

SALES NUMBER	SZ	DESCRIPTION	QTY	PRICE	EX PRICE	T	REQUIRED
6510-32807	16	LXN XP EW	9.00	98.99	890.91		05/13/25
Color SW7543		AVENUE TAN	0.00	.00	.00		

SUB-TOTAL: 890.91 TAX: 53.45 TOTAL: 944.36

Enter SALES/PRODUCT NUMBER

Shelf pricing

Sherwin Williams