CITY OF CHARLES TOWN
HISTORIC LANDMARKS COMMISSION
AGENDA • OCTOBER 14, 2026

Commission/Board Meeting **CITY HALL** **7:00 PM**

101 E Washington Street, Charles Town, WV 25414

1. CALL TO ORDER

2. APPROVAL OF MINUTES

2.1 : DRAFT September 14, 2026 minutes
09142026_HLC_Minutes DRAFT.pdf

3. UNFINISHED BUSINESS

4. NEW BUSINESS

4.1 : **Public Hearing** - *COA2026-14* - 301 W. Washington St - Projecting Sign
1. Staff Report.pdf
2. Application.pdf

4.2 : **Public Hearing** - *COA2026-16* - 208 N. Charles St - Window Replacement
1. Staff Report.pdf
2. Application.pdf

4.3 : **Public Hearing** - *COA2026-17* - 124 W. Washington St - Deck replacement and expansion
1. Staff Report.pdf
2. Application.pdf
3. Deck Plans.pdf

5. ADJOURNMENT

6. NOTICE: The Public May View the Meeting Live by Clicking on the Event Link at:

https://www.charlestownwv.us/government/agendas_minutes.php

Historic Landmarks Commission
101 East Washington Street
Charles Town, WV 25414

Meeting: 10/14/26
Department: Historic Landmarks Commission
Category: Report
Initiator:

SCHEDULED

AGENDA ITEM (ID #)

DRAFT September 14, 2026 minutes

ATTACHMENTS:

- 09142026_HLC_Minutes DRAFT.pdf

CITY OF CHARLES TOWN
HISTORIC LANDMARKS COMMISSION
MINUTES ● SEPTEMBER 14, 2026

Committee Meeting **CITY HALL** **7:00 PM**
101 E Washington Street, Charles Town, WV 25414

1. CALL TO ORDER

Present: Amanda Updike - Chair
Diane Drake
Nick Zaglifa – attended virtually

Matt Printz - Absent
Randy Hilton - Absent

James Newman, Zoning Administrator

2. APPROVAL OF MINUTES

2:1 August 10, 2026 - Minutes

RESULT:	**Approved Unanimously**
AYES:	Updike, Drake, Zaglifa

3. UNFINISHED BUSINESS

None.

4. NEW BUSINESS

4:1 Public Hearing: COA2026-13 – 206 W Congress St– Demolition Request

Staff presentation.

Motion to open public hearing:

RESULT:	**Approved**
MOVER:	Drake
SECONDER:	Zaglifa
AYES:	Updike, Drake, Zaglifa

No public comment received.

Motion to close public hearing:

RESULT:	**Approved**
MOVER:	Zaglifa
SECONDER:	Drake
AYES:	Updike, Drake, Zaglifa

DRAFT

Commission discussion regarding the doors to the deck and if they would be properly blocked. Discussion regarding the safety and stability of the deck structure.

Motion to approve COA2026-13 as recommended by staff:

RESULT:	**Approved**
MOVER:	Zaglifa
SECONDER:	Drake
AYES:	Updike, Drake, Zaglifa

4:2 Public Hearing: FIP2026-05 – 202 W. Washington St – Façade Improvement Grant Request

Staff presentation.

Motion to open public hearing:

RESULT:	**Approved**
MOVER:	Zaglifa
SECONDER:	Drake
AYES:	Updike, Drake, Zaglifa

Applicant Levi Sellers was present and explained the request for the grant.

Motion to close public hearing:

RESULT:	**Approved**
MOVER:	Zaglifa
SECONDER:	Drake
AYES:	Updike, Drake, Zaglifa

Motion to table FIP2026-05 FIP request indefinitely:

RESULT:	**DENIED**
MOVER:	Zaglifa
SECONDER:	Drake
AYES:	-

Commission discussion regarding whether signage is an appropriate use of FIP funds. Discussion of the grant application and how to make changes to the grant.

Motion to approve ONLY the Certificate of Appropriateness for 202 W Washington St subject to a condition:

RESULT:	**APPROVED**
MOVER:	Zaglifa
SECONDER:	Drake
AYES:	Updike, Drake, Zaglifa

Condition: The signage material must adhere to the requirements of the Design Review Standards.

Motion to table FIP2026-05 grant application request indefinitely:

RESULT:	**APPROVED**
MOVER:	Zaglifa
SECONDER:	Drake
AYES:	Updike, Drake, Zaglifa

The applicant was informed they have the ability to appeal the decision.

4:3 Commission Review – Annual Report

Staff presentation.

Motion to adopt the Annual Report:

RESULT:	**Approved**
MOVER:	Zaglifa
SECONDER:	Drake
AYES:	Updike, Drake, Zaglifa

There was some final discussion regarding the FIP being appealed to the City Council and rewriting the details of the grant.

5. ADJOURNMENT

Motion to adjourn:

RESULT:	**Approved**
MOVER:	Drake
SECONDER:	Zaglifa
AYES:	Updike, Drake, Zaglifa

Adjourned at 7:42 pm.

DRAFT

Historic Landmarks Commission
101 East Washington Street
Charles Town, WV 25414

Meeting: 10/14/26
Department: Historic Landmarks Commission
Category: Report
Initiator:

SCHEDULED

AGENDA ITEM (ID #)

Public Hearing - *COA2026-14* - 301 W. Washington St - Projecting Sign

ATTACHMENTS:

- 1. Staff Report.pdf
- 2. Application.pdf

Certificate of Appropriateness
COA-2026-14

Date: For the October 14, 2026 Historic Landmarks Commission Meeting
Applicant: Kara Wilder
Property Owner: THRIVE PROFESSIONAL CENTER LLC
Report by: James Newman, City Planner, Zoning/Subdivision Administrator
Proposal: Certificate of Appropriateness for a projecting sign
Address: 301 W. Washington St.
Zoning: Old Town Mixed Use Commercial

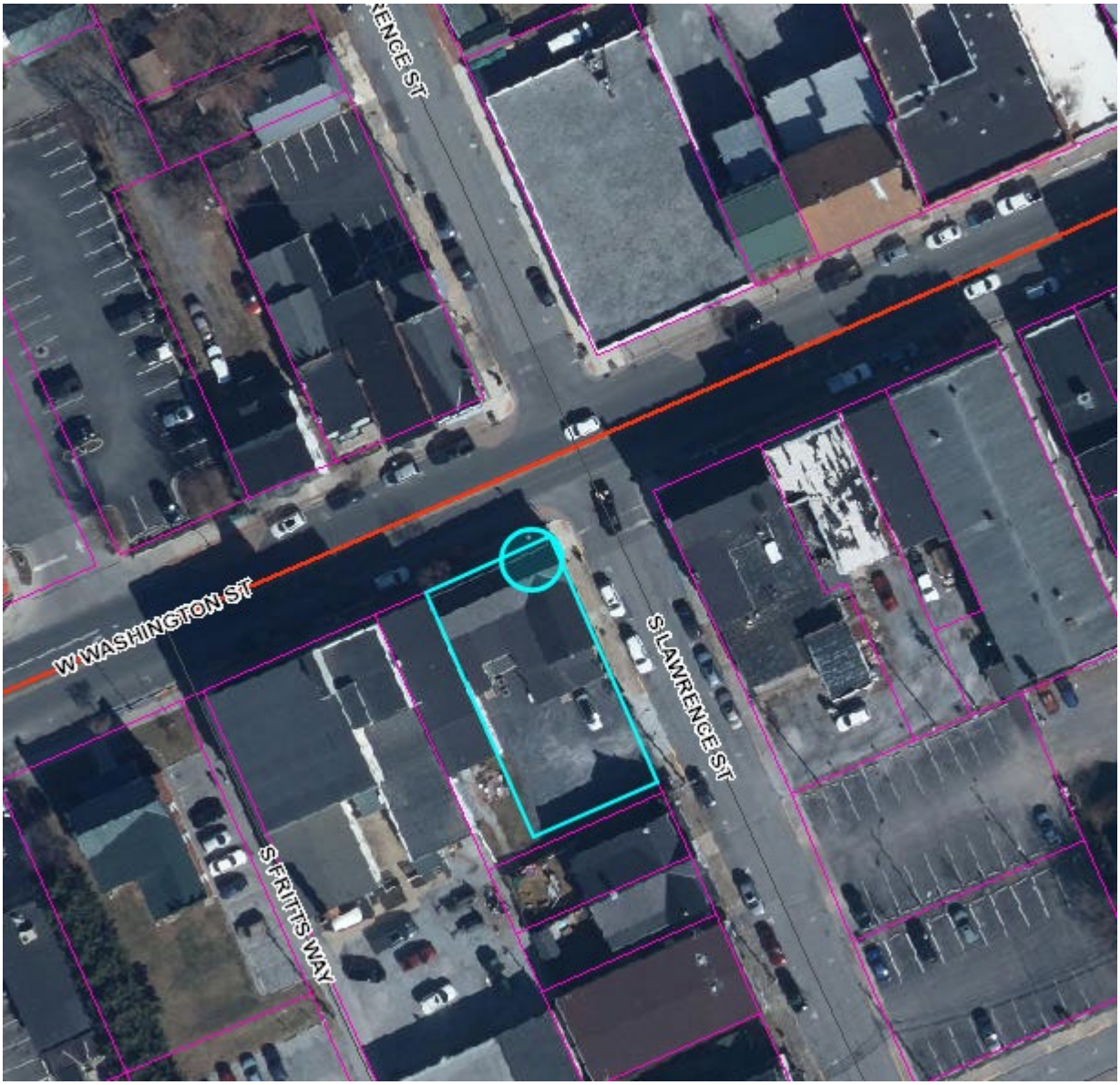

HISTORIC SURVEY BUILDING INFORMATION: Vernacular, Italianate, c. 1820, 1880s. Three bay, two story building of log or frame construction, covered with rusticated wood siding at the front elevation. **Contributing.**

PROPOSAL

A projecting sign. The applicant erected the sign prior to approval of the Certificate of Appropriateness.



DESIGN

Material: Wood

Height: 30 inches/2.5 ft.
Width: 36 inches/ 3 ft.
Depth: approx.. 2 inches.

Lighting: None.

ORDINANCE REQUIREMENTS

Section 1324.06 Signs Requiring A Permit

…

2. A Projecting or Suspended Sign shall include only the address and name of Occupant

The sign includes writing beyond what is permitted: Sourdough Bread, Made Slowly.

3. A Projecting or Suspended Sign shall not extend more than five (5) feet into the public right-of-way. In no case shall a Projecting or Suspended Sign be permitted to encroach over a motorized Vehicle travel way such as a public or private Street, alley, or Driveway. If such a Sign is suspended or projects above a public right-of- way, the issuance and continuation of a Sign Permit shall be conditioned on the sign owner obtaining, and maintaining in force, liability insurance in an amount of not less than $500,000 per occurrence per Sign .

Applicant has not provided proof of sign insurance.

Per Table 1324.06.B, the maximum Sign Area permitted for a projecting sign is 6 sq ft. Proposed sign is 7.5 square feet in area.

HISTORIC DISTRICT REQUIREMENTS

In general, painted wood or metal is the preferred background for a sign. Glossy materials that reflect glare and reduce legibility should be avoided, unless the material is appropriate to the façade.

STAFF RECOMMENDATION

Denial. The applicant erected the sign prior to approval of a Certificate of Appropriateness, the sign is larger than permitted, and no insurance policy has been submitted.

If the Commission votes to approve the sign, approval should be based upon submitting proof of an active insurance policy for the sign in accordance with the requirements of the Zoning Ordinance.

COA Application No._____

2026-14

CERTIFICATE OF APPROPRIATENESS APPLICATION

Fee: $60

No buildings, site or structure shall be moved or demolished until after an application for a certificate of appropriateness has been submitted to and approved by the Historic Landmarks Commission. All proposed activity must be approved by the Historic Landmarks Commission (HLC) via issuance of a Certificate of Appropriateness (COA).

Many of the activities for which a COA is required also requires building permit, which is a separate process from obtaining a COA.

Image of sign will be emailed to James

COA Application No._____

1. DATE: 8/25/26

2. APPLICANT'S NAME* Kara Wilder

Address: 402 S Samuel St. Charles Town WV 25414

Telephone Number: (571) 355 3344

Email Address: [redacted]

Relationship to Owner: [X] Lessee [ ] Contractor [ ] Architect [ ] Consultant

Other:_____

3. PROPERTY OWNER'S NAME Robin Dolobach

Address: 202 Larkspur Turn, Peachtree City, GA 30269

Telephone Number: (770) 301 4943

Email Address: [redacted]

*Applicants include: Property owner(s), Engineer(s), Surveyor(s), or Consultant(s)

4. LEGAL DESCRIPTION OF THE SUBJECT PROPERTY (List all parcels that apply)

Property Address: 301 W Washington St. Charles Town WV 25414

Tax Map # and Parcel(s): MAP/PARCEL: 2B0009 0000 0000

5. DESCRIPTION OF PROPOSED USE(S) OF THE PROPERTY

Retail bakery with wholesale production and customer pick up. No change to building footprint

6. DESCRIBE THE CURRENT (or if vacant, former) USE OF THE SUBJECT PROPERTY

Former retail/medical commercial space

7. TYPE OF WORK:

A. [X] Exterior alteration or repairs.

B. [ ] New Construction: 1) [ ] Primary Structure; 2) [ ] Garage; 3) [ ] New Addition; 4) [ ] Other;

C. [ ] Demolition: 1) [ ] Whole Structure; 2) [ ] Part of Structure;

D. [ ] Relocation of Structure

E. Other: Installation of exterior business sign on existing projecting pole.

8. City of Charles Town Business License # if work is being performed for a commercial use:

8737

9. EXTERIOR ALTERATION OR REPAIR

A. **Check all that apply** for which approval of the proposed activity is requested:

☐ Architectural feature (decorative ornamentation)	☐ Metal trim	☐ Iron fences
☐ Material changes (wood, brick, metal, etc.)	☐ Windows - replacement, removal, elimination or new opening	☐ New construction
☐ Roof – Change in shape/profile	☐ Shutters	☐ Additions or alterations
☐ Skylights or dormers	☐ Door and transoms	☒ Signs
☐ Masonry - cleaning, tuckpointing, removal of masonry or other changes to the masonry	☐ Cut stone steps	☐ Solar panels
☐ Removal of historic markings and paintings	☐ Security Features	☐ Mothballing
☐ Wood cornices and concealed box gutters	☐ Porch or deck	☐ Demolition
☐ Wood trim	☐ Awnings and canopies	

B. **PROVIDE A NARRATIVE. List and describe in detail all work** to be done for each item checked. Include the following materials when appropriate:

1) Sketches, photographs, specifications, manufacturer's illustrations or other description of proposed changes to the building's exterior. Detailed drawings are required for major changes in architectural features.

2) If material changes are proposed, please provide a description of them. The architect's specifications or brochures may suffice; however, the Commission may request samples of new materials.

C. SIGNS:

1) Signage activities are regulated under Article 1324 (Signs) and Section 1322.13 (Historic Overlay District) of the City of Charles Town's Zoning Ordinance and by extension the Design Review Standards. **All permitted sign sizes, location of placement and additional sign standards are regulated by Article 1324 and shall meet those standards.**

(continued on next page)

D. NEW CONSTRUCTION: Describe the nature of the proposed project. Include the following materials when appropriate:

1) Site plan with measured distances.
2) Elevation drawings of each façade and specifications which clearly show the exterior appearance of the project.
3) Samples or other description of materials to be used.
4) Drawings or other description of site improvements such as fences, sidewalks, lighting, pavement, decks, etc.

E. DEMOLITION OF STRUCTURE

1) Describe the structure's condition and reason for demolition.
2) Additional criteria is found in the Design Review Standards, including the need to prove economic hardship.
3) Describe the proposed reuse of the site, including drawings of any proposed new structure or landscaping.

F. RELOCATION OF STRUCTURE

1) Explain what will be moved, why, and proposed changes.
2) If a building will be moved into a district from outside, include photographs.
3) Include a site plan of the proposed location in the district and describe any site features which will be altered or may be disturbed, including foundations, walls, vegetation, etc.

G. MOTHBALLING OF STRUCTURE

1) Describe how the structure will be secured from unwanted entry.
2) Describe measures to be taken to keep the weather and pest out.
3) If the property owner will not be in the state of West Virginia, designate a local contact.
4) If any door(s) or window(s) are to be boarded up, they must be painted to look like a door or window or decals that look like door and window must be adhered to the boards on the window or door.
5) Additional criteria is found in the Design Review Standards, including the need to prove economic hardship.
6) Describe how the property will be maintained so as to not become a code violation, such yard maintenance.

Signs

Estimated Cost of Signage (**Excluding** Labor & Installation):

$850.00

Sign Contractor:

Shane Harris

Contractor License #: WV & City of Charles Town:

8259

TYPE OF SIGN

Type of Sign	Check One	Type of Sign	Check One
Free Standing	☐	Suspended	☒
Building Mounted	☐	Awning	☐
Window Lettering	☐	Other (List)	☐

Where on the property or building will the sign(s) be located?

on existing projecting pole extending from building facade

Sign Material:

Wood

SIGN DIMENSIONS:

Height	Width	Depth
30"	36"	

WILL SIGN(S) BE LIT? If yes, describe the type of lighting to be used:

NO

PLEASE PROVIDE PROOF OF INSURANCE (In case of sign damage), and attach to this form.

PROVIDE AN ILLUSTRATION OR PHOTOGRAPH of the PROPOSED SIGN(S) and LOCATION.

APPLICANT CERTIFICATION

I certify that, to the best of my knowledge, the submitted information and statements are true and correct. I also certify that I have read the relevant provisions of the Charles Town Design Review Standards pertaining to this application, Section 1322.13, of the Zoning Ordinance and for a sign request, Article 1324 of the Zoning Ordinance.

Signature of Applicant Lara N. Wilder Date 8/25/24

Signature of Property Owner(s) (If different than Applicant)

_____ Date _____

Please submit an original completed application to the following:

At City Hall:	Or	Via Mail:
Zoning Administrator City of Charles Town 101 E. Washington Street Charles Town, WV 25414		Zoning Administrator City of Charles Town PO BOX 14 Charles Town, WV 25414

CITY USE ONLY

Application Number:_____ Date Application Received:_____

Zoning District: _____

Fee: $_____ Paid: $_____ Check No._____

Receipt No._____

Historic Landmarks Commission Approval or Denial and date of action:

_____

Comments:_____

_____

_____

_____

Historic Landmarks Commission
101 East Washington Street
Charles Town, WV 25414

Meeting: 10/14/26
Department: Historic Landmarks Commission
Category: Report
Initiator:

SCHEDULED

AGENDA ITEM (ID #)

Public Hearing - *COA2026-16* - 208 N. Charles St - Window Replacement

ATTACHMENTS:

- 1. Staff Report.pdf
- 2. Application.pdf

Certificate of Appropriateness
COA-2026-16

Date: For the October 14, 2026 Historic Landmarks Commission Meeting
Applicant: Jill Baldinger
Property Owner: Jill Baldinger
Report by: James Newman, City Planner, Zoning/Subdivision Administrator
Proposal: Certificate of Appropriateness for window replacements
Address: 208 N. Charles St.
Zoning: Old Town Mixed Use Commercial

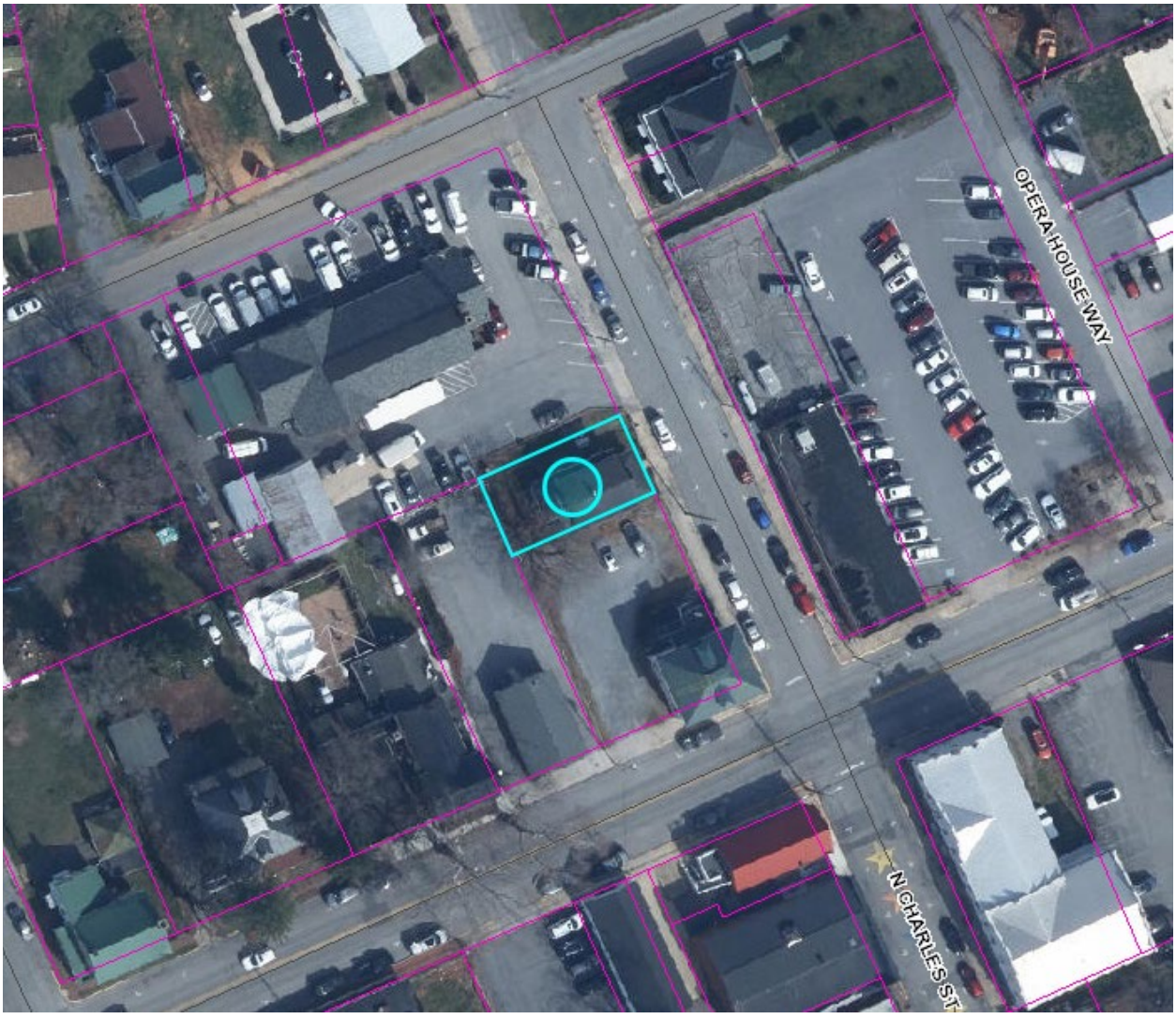

HISTORIC SURVEY BUILDING INFORMATION: None available.

PROPOSAL
Window replacements – new materials

EXISTING WINDOWS – Staff photographs taken Sept. 23, 2026



View of the front of the house, from N. Charles St.



View of the left/south side of the house, from N. Charles St.



View of the right/north side of the house, from N. Charles St.

APPLICANT PHOTOGRAPHS

Jill Baldinger
208 N Charles Street
Charles Town, WV 25414
540-931-5313

Replace 90-year-old, broken wooden windows with new vinyl windows.



Peeling paint and water damage make the windows hard to open and close.



Storm windows are loose and there are gaps between the windows and the wood molding around the windows.



Old metal mechanisms are rusty and don't work well. Many windows are missing parts.

Applicant proposes to replace existing wooden windows with vinyl windows.

From Andersen Windows:

A-SERIES DOUBLE-HUNG WINDOW

LEARN DESIGN IT TECH SPECS



TRADITIONAL ARCHITECTURAL STYLE

Our best-performing double-hung window

A-Series double-hung windows have two operating sash that move up and down allowing for ventilation on the top, bottom or both. The sash tilt in for easy cleaning from the inside of your home. Made of wood protected by fiberglass and Fibrex® composite material, it's our best-performing double-hung window.

*2024 Andersen brand surveys of U.S. builders, homeowners & realtors

3.5 (11)

Request a quote →

MOST POPULAR EXTERIOR OPTIONS

Black Dark Bronze Sandtone Terratone

View all options →

ORDINANCE REQUIREMENTS

None.

HISTORIC DISTRICT REQUIREMENTS

"Replacement of windows which are visible from the primary street and side street, way or alley for corner lots, if different in appearance and material from the original windows, will require a COA."

STAFF RECOMMENDATION

Approval. While the HLC has expressed a strong and consistent interest in keeping wooden windows in the Historic District, the house is not a contributing structure, and is already clad in vinyl siding. Whie the wooden windows are one of the few remaining design elements worth preserving on the house, replacing them with vinyl will not harm the character of the building or district as vinyl is already the predominant exterior material.

COA Application No._____

RECEIVED
SEP 01 2026
BY:

CERTIFICATE OF APPROPRIATENESS APPLICATION

Fee: $60

No buildings, site or structure shall be moved or demolished until after an application for a certificate of appropriateness has been submitted to and approved by the Historic Landmarks Commission. All proposed activity must be approved by the Historic Landmarks Commission (HLC) via issuance of a Certificate of Appropriateness (COA).

Many of the activities for which a COA is required also requires building permit, which is a separate process from obtaining a COA.

COA Application No._____

1. DATE: September 1, 2026

2. APPLICANT'S NAME* Jill Baldinger

Address: 208 N. Charles St., Charles Town, WV 25414

Telephone Number: 540-931-5313

Email Address: [redacted]

Relationship to Owner: ☐ Lessee ☐ Contractor ☐ Architect ☐ Consultant

Other: Owner

3. PROPERTY OWNER'S NAME Jill Baldinger

Address: 208 N. Charles St., Charles Town, WV 25414

Telephone Number: 540-931-5313

Email Address: [redacted]

*Applicants include: Property owner(s), Engineer(s), Surveyor(s), or Consultant(s)

4. LEGAL DESCRIPTION OF THE SUBJECT PROPERTY (List all parcels that apply)

Property Address: 208 N. Charles St., Charles Town, WV 25414

Tax Map # and Parcel(s): _____

5. DESCRIPTION OF PROPOSED USE(S) OF THE PROPERTY

residential

6. DESCRIBE THE CURRENT (or if vacant, former) USE OF THE SUBJECT PROPERTY

residential

7. TYPE OF WORK:

A. ☐ Exterior alteration or repairs.

B. ☐ New Construction: 1) ☐ Primary Structure; 2) ☐ Garage; 3) ☐ New Addition; 4) ☑ Other;

C. ☐ Demolition: 1) ☐ Whole Structure; 2) ☐ Part of Structure;

D. ☐ Relocation of Structure

E. Other:

New Windows

8. City of Charles Town Business License # if work is being performed for a commercial use:

9. EXTERIOR ALTERATION OR REPAIR

A. **Check all that apply** for which approval of the proposed activity is requested:

☐ Architectural feature (decorative ornamentation)	☐ Metal trim	☐ Iron fences
☐ Material changes (wood, brick, metal, etc.)	☑ Windows - replacement, removal, elimination or new opening	☐ New construction
☐ Roof – Change in shape/profile	☐ Shutters	☐ Additions or alterations
☐ Skylights or dormers	☐ Door and transoms	☐ Signs
☐ Masonry - cleaning, tuckpointing, removal of masonry or other changes to the masonry	☐ Cut stone steps	☐ Solar panels
☐ Removal of historic markings and paintings	☐ Security Features	☐ Mothballing
☐ Wood cornices and concealed box gutters	☐ Porch or deck	☐ Demolition
☐ Wood trim	☐ Awnings and canopies	

B. **PROVIDE A NARRATIVE. List and describe in detail all work** to be done for each item checked. Include the following materials when appropriate:

1) Sketches, photographs, specifications, manufacturer's illustrations or other description of proposed changes to the building's exterior. Detailed drawings are required for major changes in architectural features.

2) If material changes are proposed, please provide a description of them. The architect's specifications or brochures may suffice; however, the Commission may request samples of new materials.

C. SIGNS:

1) Signage activities are regulated under Article 1324 (Signs) and Section 1322.13 (Historic Overlay District) of the City of Charles Town's Zoning Ordinance and by extension the Design Review Standards. **All permitted sign sizes, location of placement and additional sign standards are regulated by Article 1324 and shall meet those standards.**

(continued on next page)

D. NEW CONSTRUCTION: Describe the nature of the proposed project. Include the following materials when appropriate:

1) Site plan with measured distances.
2) Elevation drawings of each façade and specifications which clearly show the exterior appearance of the project.
3) Samples or other description of materials to be used.
4) Drawings or other description of site improvements such as fences, sidewalks, lighting, pavement, decks, etc.

E. DEMOLITION OF STRUCTURE

1) Describe the structure's condition and reason for demolition.
2) Additional criteria is found in the Design Review Standards, including the need to prove economic hardship.
3) Describe the proposed reuse of the site, including drawings of any proposed new structure or landscaping.

F. RELOCATION OF STRUCTURE

1) Explain what will be moved, why, and proposed changes.
2) If a building will be moved into a district from outside, include photographs.
3) Include a site plan of the proposed location in the district and describe any site features which will be altered or may be disturbed, including foundations, walls, vegetation, etc.

G. MOTHBALLING OF STRUCTURE

1) Describe how the structure will be secured from unwanted entry.
2) Describe measures to be taken to keep the weather and pest out.
3) If the property owner will not be in the state of West Virginia, designate a local contact.
4) If any door(s) or window(s) are to be boarded up, they must be painted to look like a door or window or decals that look like door and window must be adhered to the boards on the window or door.
5) Additional criteria is found in the Design Review Standards, including the need to prove economic hardship.
6) Describe how the property will be maintained so as to not become a code violation, such yard maintenance.

Signs

Estimated Cost of Signage (**Excluding** Labor & Installation):

_____

Sign Contractor:

_____

Contractor License #: WV & City of Charles Town:

_____

TYPE OF SIGN

Type of Sign	Check One	Type of Sign	Check One
Free Standing	☐	Suspended	☐
Building Mounted	☐	Awning	☐
Window Lettering	☐	Other (List)	☐

Where on the property or building will the sign(s) be located?

_____

Sign Material:

_____

SIGN DIMENSIONS:

Height	Width	Depth

WILL SIGN(S) BE LIT? If yes, describe the type of lighting to be used:

_____

PLEASE PROVIDE PROOF OF INSURANCE (In case of sign damage), and attach to this form.

PROVIDE AN ILLUSTRATION OR PHOTOGRAPH of the PROPOSED SIGN(S) and LOCATION.

APPLICANT CERTIFICATION

I certify that, to the best of my knowledge, the submitted information and statements are true and correct. I also certify that I have read the relevant provisions of the Charles Town Design Review Standards pertaining to this application, Section 1322.13, of the Zoning Ordinance and for a sign request, Article 1324 of the Zoning Ordinance.

Signature of Applicant

_____ Date _____

Signature of Property Owner(s) (If different than Applicant)

_____ Date _____

Please submit an original completed application to the following:

At City Hall:	Or	Via Mail:
Zoning Administrator City of Charles Town 101 E. Washington Street Charles Town, WV 25414		Zoning Administrator City of Charles Town PO BOX 14 Charles Town, WV 25414

CITY USE ONLY

Application Number:_____ Date Application Received:_____

Zoning District: _____

Fee: $_____ Paid: $_____ Check No._____

Receipt No._____

Historic Landmarks Commission Approval or Denial and date of action:

_____

Comments:_____

_____

_____

_____

Historic Landmarks Commission
101 East Washington Street
Charles Town, WV 25414

Meeting: 10/14/26
Department: Historic Landmarks Commission
Category: Report
Initiator:

SCHEDULED

AGENDA ITEM (ID #)

Public Hearing - *COA2026-17* - 124 W. Washington St - Deck replacement and expansion

ATTACHMENTS:

- 1. Staff Report.pdf
- 2. Application.pdf
- 3. Deck Plans.pdf

Certificate of Appropriateness
COA-2026-17

Date: For the October 14, 2026 Historic Landmarks Commission Meeting
Applicant: Pablo Rios
Property Owner: Lucy Flores
Report by: James Newman, City Planner, Zoning/Subdivision Administrator
Proposal: Certificate of Appropriateness for window replacements
Address: 124 W. Washington St.
Zoning: Old Town Mixed Use Commercial



HISTORIC SURVEY BUILDING INFORMATION: Italianate, c. 1880s. This three story, four bay brick building has a dominant cornice with brackets and arched-topped window hoods. **Contributing.**

PROPOSAL
Deck replacement

EXISTING DECK – Staff photograph taken October 1, 2026



View of the western side of the structure, from N. Charles St.

PROPOSED DESIGN

Applicant proposes to remove the existing left side stairs, which are a hazard due to being located very close to overhead powerlines. Applicant proposes instead to construct a new set of stairs that will lead towards N. Charles St. The stairs will extend out from the deck a total length of 12 feet (distance from ground level to the deck surface).

Proposed material: Wood.

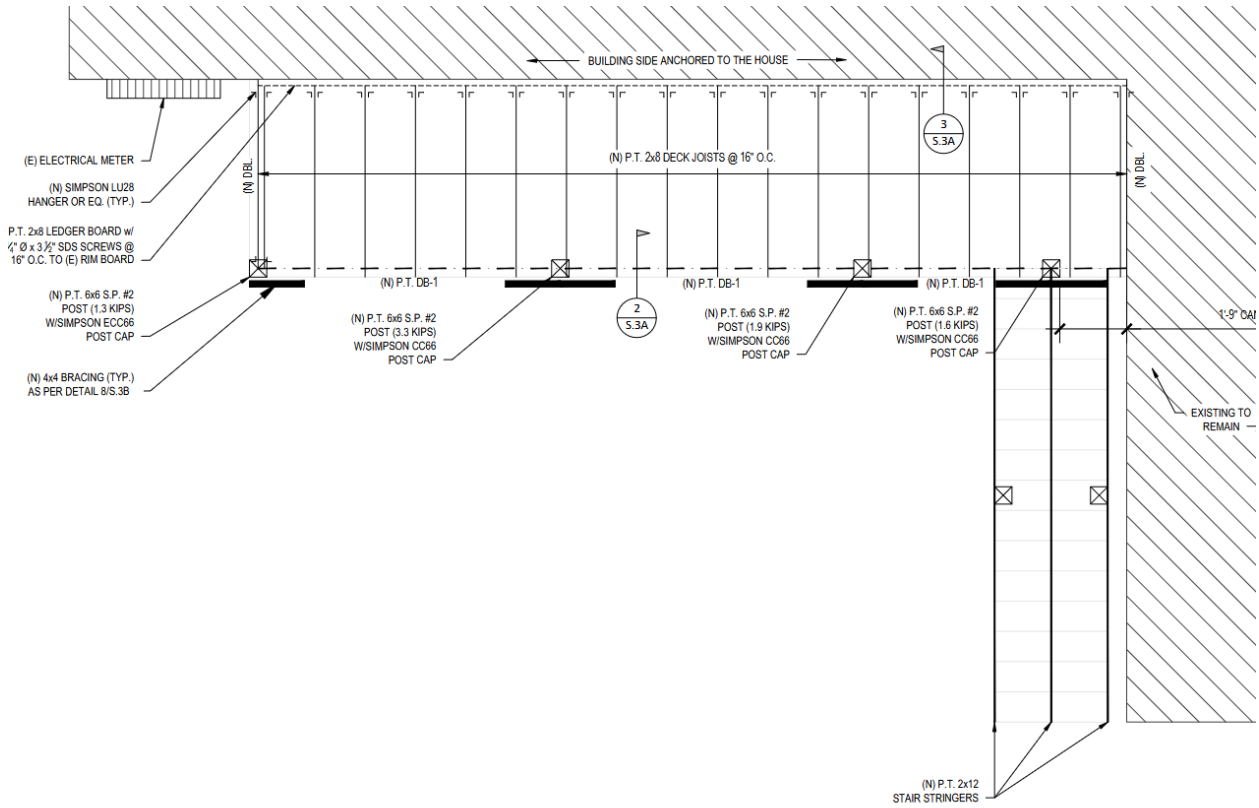

ORDINANCE REQUIREMENTS

None.

HISTORIC DISTRICT REQUIREMENTS

"*It is important to note that porches/decks should not mimic an architectural style not found on the structure or in the districts.*" – pg. 34

1. *Decks should not be proposed with walls or roofs.* – Applicant does not proposes to wall or roof the deck.
2. *On structures where significant detail exists on the rear of a building, decks should not obstruct the detailing.* – Applicant does not propose to obstruct building details. The stairs will have a safety railing.

3. *Design and materials should coordinate with those of the structure and decks should have a design similar to the detailing on the building. Simple structures call for simple decks.* – Applicant proposes a wood deck staircase.

4. *Modern materials, such as pressure treated lumber, should not remain in their original or raw state. These should blend with the historic character of the district, as well as materials used on the building or along the streetscape.* – No information provided on proposed treatment of the staircase.

STAFF RECOMMENDATION

Approval.

COA Application No._____

1. DATE: 09/16/26

2. APPLICANT'S NAME* Pablo Rios

Address: 326 S Maple Ave Martinsburg WV 25401

Telephone Number: (540)-871-1136

Email Address: [redacted]

Relationship to Owner: ☐ Lessee ☒ Contractor ☐ Architect ☐ Consultant

Other: _____

3. PROPERTY OWNER'S NAME Lucil Flores

Address: 124 washington st

Telephone Number: ( )

Email Address: _____

*Applicants include: Property owner(s), Engineer(s), Surveyor(s), or Consultant(s)

COA Application No._____

CERTIFICATE OF APPROPRIATENESS APPLICATION

Fee: $60

No buildings, site or structure shall be moved or demolished until after an application for a certificate of appropriateness has been submitted to and approved by the Historic Landmarks Commission. All proposed activity must be approved by the Historic Landmarks Commission (HLC) via issuance of a Certificate of Appropriateness (COA).

Many of the activities for which a COA is required also requires building permit, which is a separate process from obtaining a COA.

RECEIVED
SEP 16 2026
BY: VS

26-699 HLC

4. LEGAL DESCRIPTION OF THE SUBJECT PROPERTY (List all parcels that apply)

Property Address: 124 W washington St Charles town 25414

Tax Map # and Parcel(s): _____

5. DESCRIPTION OF PROPOSED USE(S) OF THE PROPERTY

rental Property / Apartments

_____

6. DESCRIBE THE CURRENT (or if vacant, former) USE OF THE SUBJECT PROPERTY

rental Property / Apartments

_____

7. TYPE OF WORK:

A. [X] Exterior alteration or repairs.

B. [ ] New Construction: 1) [ ] Primary Structure; 2) [ ] Garage; 3) [ ] New Addition; 4) [ ] Other;

C. [ ] Demolition: 1) [ ] Whole Structure; 2) [ ] Part of Structure;

D. [ ] Relocation of Structure

E. Other:

_____

_____

8. City of Charles Town Business License # if work is being performed for a commercial use:

8780

9. EXTERIOR ALTERATION OR REPAIR

A. **Check all that apply** for which approval of the proposed activity is requested:

☐ Architectural feature (decorative ornamentation)	☐ Metal trim	☐ Iron fences
☐ Material changes (wood, brick, metal, etc.)	☐ Windows - replacement, removal, elimination or new opening	☐ New construction
☐ Roof – Change in shape/profile	☐ Shutters	☐ Additions or alterations
☐ Skylights or dormers	☐ Door and transoms	☐ Signs
☐ Masonry - cleaning, tuckpointing, removal of masonry or other changes to the masonry	☐ Cut stone steps	☐ Solar panels
☐ Removal of historic markings and paintings	☐ Security Features	☐ Mothballing
☐ Wood cornices and concealed box gutters	☒ Porch or deck	☐ Demolition
☐ Wood trim	☐ Awnings and canopies	

B. **PROVIDE A NARRATIVE. List and describe in detail all work** to be done for each item checked. Include the following materials when appropriate:

1) Sketches, photographs, specifications, manufacturer's illustrations or other description of proposed changes to the building's exterior. Detailed drawings are required for major changes in architectural features.

2) If material changes are proposed, please provide a description of them. The architect's specifications or brochures may suffice; however, the Commission may request samples of new materials.

C. SIGNS:

1) Signage activities are regulated under Article 1324 (Signs) and Section 1322.13 (Historic Overlay District) of the City of Charles Town's Zoning Ordinance and by extension the Design Review Standards. **All permitted sign sizes, location of placement and additional sign standards are regulated by Article 1324 and shall meet those standards.**

(continued on next page)

D. NEW CONSTRUCTION: Describe the nature of the proposed project. Include the following materials when appropriate:

1) Site plan with measured distances.
2) Elevation drawings of each façade and specifications which clearly show the exterior appearance of the project.
3) Samples or other description of materials to be used.
4) Drawings or other description of site improvements such as fences, sidewalks, lighting, pavement, decks, etc.

E. DEMOLITION OF STRUCTURE

1) Describe the structure's condition and reason for demolition.
2) Additional criteria is found in the Design Review Standards, including the need to prove economic hardship.
3) Describe the proposed reuse of the site, including drawings of any proposed new structure or landscaping.

F. RELOCATION OF STRUCTURE

1) Explain what will be moved, why, and proposed changes.
2) If a building will be moved into a district from outside, include photographs.
3) Include a site plan of the proposed location in the district and describe any site features which will be altered or may be disturbed, including foundations, walls, vegetation, etc.

G. MOTHBALLING OF STRUCTURE

1) Describe how the structure will be secured from unwanted entry.
2) Describe measures to be taken to keep the weather and pest out.
3) If the property owner will not be in the state of West Virginia, designate a local contact.
4) If any door(s) or window(s) are to be boarded up, they must be painted to look like a door or window or decals that look like door and window must be adhered to the boards on the window or door.
5) Additional criteria is found in the Design Review Standards, including the need to prove economic hardship.
6) Describe how the property will be maintained so as to not become a code violation, such yard maintenance.

Signs

Estimated Cost of Signage (**Excluding** Labor & Installation):

_____

Sign Contractor:

_____

Contractor License #: WV & City of Charles Town:

_____

TYPE OF SIGN

Type of Sign	Check One	Type of Sign	Check One
Free Standing	☐	Suspended	☐
Building Mounted	☐	Awning	☐
Window Lettering	☐	Other (List)	☐

Where on the property or building will the sign(s) be located?

_____

Sign Material:

_____

SIGN DIMENSIONS:

Height	Width	Depth

WILL SIGN(S) BE LIT? If yes, describe the type of lighting to be used:

_____

PLEASE PROVIDE PROOF OF INSURANCE (In case of sign damage), and attach to this form.

PROVIDE AN ILLUSTRATION OR PHOTOGRAPH of the PROPOSED SIGN(S) and LOCATION.

APPLICANT CERTIFICATION

I certify that, to the best of my knowledge, the submitted information and statements are true and correct. I also certify that I have read the relevant provisions of the Charles Town Design Review Standards pertaining to this application, Section 1322.13, of the Zoning Ordinance and for a sign request, Article 1324 of the Zoning Ordinance.

Signature of Applicant

_____ Date 09/16/26

Signature of Property Owner(s) (If different than Applicant)

_____ Date 09/16/26

Please submit an original completed application to the following:

At City Hall:	Or	Via Mail:
Zoning Administrator City of Charles Town 101 E. Washington Street Charles Town, WV 25414		Zoning Administrator City of Charles Town PO BOX 14 Charles Town, WV 25414

CITY USE ONLY

Application Number:_____ Date Application Received:_____

Zoning District: _____

Fee: $_____ Paid: $_____ Check No._____

Receipt No._____

Historic Landmarks Commission Approval or Denial and date of action:

_____

Comments:_____

_____

_____

_____

26-669 HLC
Permit Number

Approved for:

DECK

Plan Reviewer

10/05/2026 8:09:11 PM
Date

PLANS REVIEWED AND ACCEPTED BY CITY OF CHARLES TOWN WV PER THE **2018 INTERNATIONAL BUILDING CODE (IBC)**

PLEASE NOTE THE FOLLOWING:

Per **2018 IBC 107.3.1**, an approved set of construction documents **MUST** be kept at the site of work and be available to the inspector at time of inspection.

Non-compliance may result in re-inspection fees.

Minimum required inspections in order:
(Must be ready by 8am on scheduled day)

1. Footings (prior to pour)
2. Rough Framing (prior to post backfill & trims installed, including stair footings if not already approved)
3. Final

STAIRCASE REQUIREMENTS

ALL stairways must meet requirements of having risers and treads that vary no more that 3/8" from the largest to the smallest in each flight.
Per 2018 IBC Section 1011
Guards and their support posts **must** meet 200 LBS lateral load
Per 2018 IBC 1607.8.1.1
Graspable Handrails must be provided on both sides of each continuous flight
Per 2018 IBC 1011.11

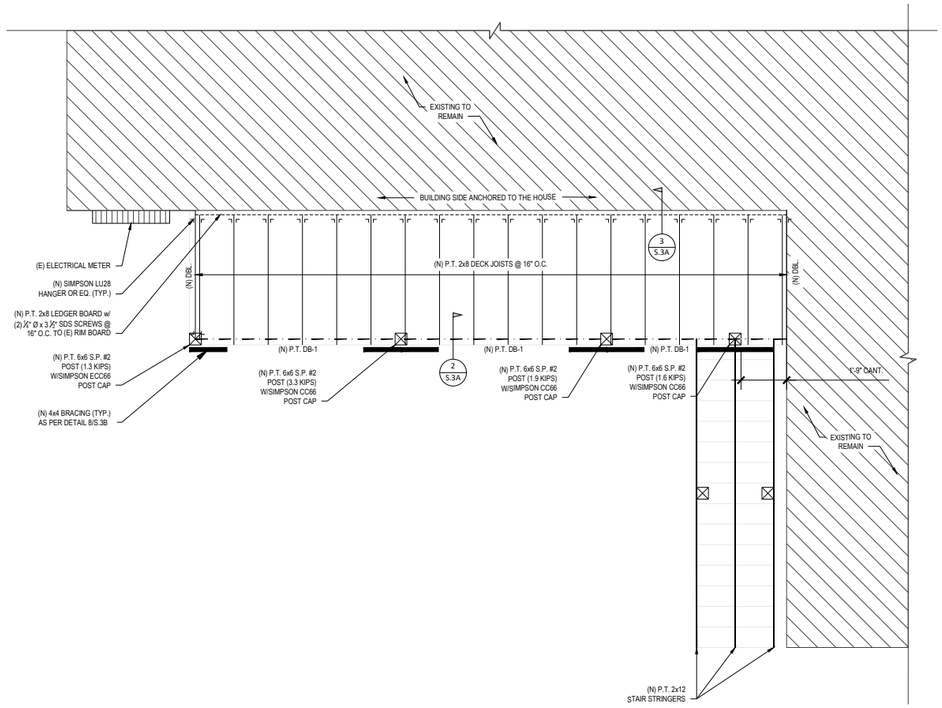

DECK FRAMING PLAN
SCALE: 1/2" = 1'-0"

DECK FRAMING PLAN NOTES:

1. FRAMING SUPPORTING ELEMENTS HAVE BEEN DESIGNED FOR LOADING AS GIVEN IN STRUCTURAL NOTES.
2. DECK JOIST LAYOUT SHOWN IN THE FRAMING PLAN IS ONLY FOR GUIDANCE & SHALL NOT BE USED AS SHOP DRAWINGS. SUPPLIER TO ENSURE THE UNOBSTRUCTED PLUMBING, HVAC OPENING & HEADROOM CLEARANCE.
3. PROVIDE SOLID BLOCKING/CONTINUOUS POST ALL THE WAY TO FOUNDATION TO PROVIDE CONTINUOUS BEARING PATH.
4. WHERE SIMPSON HARDWARE IS SLIGHTLY WIDER THAN BEAM/JOIST, PROVIDE SHIM MATERIAL FOR FLUSH INSTALLATION.
5. REFER TO SHEET S.00 FOR STRUCTURAL NOTES.

DRAWING LEGEND

DRAWN AS	DESCRIPTION
———	(N) DECK JOIST
- - - - - - - - - -	(N) LEDGER
— · — · —	(N) BEAM
▮ ⊠	(N) LUMBER POSTS
□	POST ABOVE
⌟⌞	(N) SIMPSON HANGER
TYP.	TYPICAL
P.T.	PRESSURE TREATED
U.N.O.	UNLESS NOTED OTHERWISE

IMPORTANT NOTES :-

CONTRACTOR TO FIELD VERIFY EXISTING FRAMING CONDITION PRIOR TO COMMENCEMENT OF WORK. CONTACT MATTHEW ANDERSON FOR CONSULTATION IF ANY DISCREPANCY IS FOUND BETWEEN ACTUAL CONDITION AND THAT SHOWN IN THESE DRAWINGS. REVISED DRAWINGS WILL BE ISSUED BASED ON THAT.

BEAM SCHEDULE

MARK	SIZE
DB-1	(2) 2x8 S.P. #2

MATTHEW W ANDERSON REGISTERED 15111 STATE OF WEST VIRGINIA PROFESSIONAL ENGINEER

Digitally signed by Matthew W. Anderson
Date: 2026.09.16 10:05:18-04'00'

PO Box 735, Lovettsville, VA 20180
571.528.8998 www.mwa-pe.com

Customer: MR. PABLO RIOS

Project Name: 124 W WASHINGTON ST - DECK REPLACEMENT
124 W WASHINGTON ST, CHARLES TOWN WV 25414

SHEET TITLE: DECK FRAMING PLAN

REVISIONS: Review Set

PROJECT NUMBER:	26-482
DATE:	09/16/2026
DESIGNER:	MWA PE
SCALE:	AS INDICATED
SHEET NUMBER:	S.1B

STRUCTURAL NOTES

GENERAL STRUCTURAL:

BUILDING CODES:

THE GOVERNING CODE IS INTERNATIONAL RESIDENTIAL CODE (IRC)-2021 EDITION, INTERNATIONAL BUILDING CODE (IBC) 2021 AND/OR LOCAL COUNTY CODE AMMENDMENTS AND/OR ORDINANCES.

ANY REVISION INITIATED BY THE OWNER, GENERAL CONTRACTOR AND/OR THE SUBCONTRACTOR THAT DIRECTLY INFLUENCES OR CHANGES STRUCTURAL ELEMENTS INCLUDING, BUT NOT LIMITED TO FLOOR JOIST, BEAM OR HEADER SPANS; WALL HEIGHTS; BEAM OR HEADER SIZES; RELOCATION OF BEARING WALLS, FOOTING SIZES, ETC. AS INDICATED ON THESE DRAWINGS, SHALL BE NOTIFIED IN WRITING INDICATING THE PROPOSED CHANGES FOR REVIEW. ANY REQUIRED REVIEW, CALCULATION, AND/OR DRAWING MODIFICATION NECESSARY TO ACCURATELY REPRESENT THE PROPOSED CHANGES SHALL BE CHARGED AS AN ADDITIONAL SERVICE.

THESE DRAWINGS ARE NOT TO BE SCALED FOR CONSTRUCTION PURPOSES. DIMENSIONS NOTED TAKE PRECEDENCE OVER SCALE.

NO INSPECTION(S) WILL BE MADE BY MATTHEW ANDERSON UNLESS A COUNTY APPROVED SET OF PLANS IS PRESENT AT THE JOB SITE WHERE REQUIRED BY LOCAL AUTHORITIES.

ALL DIMENSIONS SHOWN ARE TO FACE OF STUD (F.O.S.), UNLESS OTHERWISE NOTED. DIMENSIONAL ADJUSTMENTS MAY INCLUDE, BUT ARE NOT LIMITED TO: CENTER LINE (C), FACE OF CONCRETE (F.O.C.) AND FACE OF MASONRY (F.O.M.)

COMMENCEMENT OF WORK BY THE CONTRACTOR AND/OR ANY SUBCONTRACTOR SHALL INDICATE A KNOWLEDGE AND ACCEPTANCE OF ALL CONDITIONS DESCRIBED IN THESE CONSTRUCTION DOCUMENTS WHICH COULD AFFECT THEIR WORK.

IN CASE OF CONFLICT BETWEEN THE GENERAL NOTES, SPECIFICATIONS AND DRAWINGS REGARDING STRUCTURAL ISSUES, THE MOST STRINGENT REQUIREMENTS SHALL GOVERN.

WORK NOT INDICATED ON A PART OF THE DRAWINGS, BUT REASONABLY IMPLIED TO BE SIMILAR TO THAT SHOWN AT CORRESPONDING PLACES, SHALL BE REPEATED.

THE CONTRACTOR IS RESPONSIBLE FOR MEANS AND METHODS OF CONSTRUCTION AND CONSTRUCTION PROCEDURES, FABRICATION PROCESS, COORDINATION OF WORK WITH OTHER TRADES AND JOB SITE SAFETY.

TEMPORARY BRACING, SHEATHING, SHORING, ETC., REQUIRED TO INSURE THE STRUCTURAL INTEGRITY/ STABILITY OF THE EXISTING BUILDINGS, SIDEWALLS, UTILITIES, ETC., DURING CONSTRUCTION IS THE CONTRACTOR'S RESPONSIBILITY AND SHALL BE DESIGNED BY A REGISTERED PROFESSIONAL ENGINEER EMPLOYED BY CONTRACTOR.

DESIGN LOADS

GRAVITY LOAD

ROOF DEAD LOAD	= 17 PSF
DECK DEAD LOAD	= 10 PSF
DECK LIVE LOAD	= 60 PSF
GROUND SNOW LOAD (Pg)	= 30 PSF
EXPOSURE FACTOR (Ce)	= 1.00
THERMAL FACTOR (Ct)	= 1.00
IMPORTANCE FACTOR (I)	= 1.00

ALLOWABLE DEFLECTION FACTOR FOR

ROOF		FLOOR	
LIVE LOAD	= L/240	LIVE LOAD	= L/360
TOTAL LOAD	= L/180	TOTAL LOAD	= L/240

WIND LOAD

3 SECOND GUST WIND SPEED ULTIMATE	= 115 MPH (PER FIG 26.5-1, ASCE 7-16)
RISK CATEGORY	= II (AS PER TABLE 1.5-1, ASCE 7-16)
EXPOSURE	= B
ENCLOSURE CLASSIFICATION	= ENCLOSED

CONCRETE

ALL CONCRETE FOR FOOTINGS, FOUNDATION WALLS, RETAINING WALLS, AND FLOOR SLABS ON GRADE SHALL ATTAIN A MINIMUM 28-DAY ULTIMATE COMPRESSIVE STRENGTH AS FOLLOWS:

BASEMENT/FOUNDATION WALLS	: 2,500 PSI	FOOTINGS	: 2,500 PSI
BASEMENT SLABS	: 2,500 PSI	SLAB EXPOSED TO WEATHER	: 2,500 PSI

ALL CONCRETE EXPOSED TO THE WEATHER AND SUBJECT TO FREEZING AND THAWING IN A MOIST WET CONDITION OR DEICING CHEMICALS SHALL BE AIR ENTRAINED, THE TOTAL AIR CONTENT (PERCENT BY VOLUME OF CONCRETE) SHALL NOT BE LESS THAN 5 PERCENT (5%) OR MORE THAN 7 PERCENT (7%) W/ f'c AT 28 DAYS : 2,500 PSI & MAXIMUM WATER CEMENT RATIO OF 0.45.

ALL CONSTRUCTION JOINTS SHALL BE ROUGHENED AND KEYS PROVIDED WHERE REQUIRED OR INDICATED ON THE DRAWINGS. CONSTRUCTION JOINTS, OTHER THAN THOSE SHOWN ON THE DRAWINGS, MAY BE PROPOSED BY THE CONTRACTOR. HOWEVER, THE LOCATIONS ARE SUBJECT TO REVIEW BY THE ARCHITECT AND/OR STRUCTURAL ENGINEER. ALL VERTICAL CONSTRUCTION, CONTROL AND CONTRACTION JOINTS SHALL LIE IN TRUE VERTICAL PLANE.

ALL FORMWORK AND PLACING OF CONCRETE SHALL BE PLUMB, LEVEL, AND SQUARE. THE STRUCTURAL ENGINEER SHALL REVIEW AND APPROVE ANY PROPOSED FORMWORK DESIGN DIFFERENT FROM INDUSTRY STANDARD PRACTICES.

EXTERIOR SLAB AREAS SHALL BE BROOM FINISHED, UNLESS OTHERWISE SPECIFIED BY THE ARCHITECT. THE STROKES SHALL MAINTAIN THE SAME DIRECTION AT ADJACENT SURFACES. NO RIPPLES, BUMPS, OR ANY OTHER IRREGULARITIES WILL BE ACCEPTABLE

MATERIALS

STRUCTURAL LUMBER

STRUCTURAL LUMBER SHALL BE IN ACCORDANCE WITH THE NATIONAL DESIGN SPECIFICATIONS FOR WOOD CONSTRUCTION (NDS) 2021 EDITION, PUBLISHED BY THE NATIONAL FOREST PRODUCTS ASSOCIATION. ALL STRUCTURAL FRAME MEMBERS SHALL BE ONE OF THE FOLLOWING MINIMUM VALUES. UNLESS OTHERWISE NOTED:

SOUTHERN PINE #2 (SIZE CLASSIFICATIONS 2" TO 4" WIDE)

Fb	BENDING	: 1,100 psi
Ft	TENSION (parallel to grain)	: 675 psi
Fv	SHEAR (parallel to grain)	: 175 psi
Fc ⊥	COMPRESSION (perpendicular to grain)	: 565 psi
Fc //	COMPRESSION (parallel to grain)	: 1,450 psi
E	MODULUS OF ELASTICITY	: 1,400,000 psi
Emin.	MODULUS OF ELASTICITY	: 510,000 psi

SOUTHERN PINE #2 (SIZE CLASSIFICATION 5" TO 6" WIDE)

Fb	BENDING	: 1,000 psi
Ft	TENSION (parallel to grain)	: 600 psi
Fv	SHEAR (parallel to grain)	: 175 psi
Fc ⊥	COMPRESSION (perpendicular to grain)	: 565 psi
Fc //	COMPRESSION (parallel to grain)	: 1,400 psi
E	MODULUS OF ELASTICITY	: 1,400,000 psi
Emin.	MODULUS OF ELASTICITY	: 510,000 psi

LUMBER EXPOSED TO THE ELEMENTS, INCLUDING BUT NOT LIMITED TO: POSTS, BEAMS, DECKING, DECK, FRAMING LEDGERS, ETC. SHALL BE PRESSURE TREATED PER IRC SECTION R317. ALL FASTENERS SHALL BE PER IRC SECTION R317.3.

REQUIRED POST SIZES FROM POINT LOADS AT GIRDER TRUSS BEAM AND/OR HEADER END LOCATIONS SHALL BE CONTINUOUS, BEARING ONTO BEAMS OR CONTINUOUS TO FOOTINGS AS INDICATED. PROVIDE SQUASH BLOCKS BETWEEN FLOOR FRAMING AS NECESSARY OR REQUIRED.

STRUCTURAL CONNECTORS INDICATED ON THESE DOCUMENTS SHALL BE PROVIDED BY SIMPSON STRONG-TIE COMPANY, INC., PROVIDE JOIST HANGERS AT EACH END OF ALL FLOOR JOISTS, AND/OR BEAMS FLUSH WITH ADJACENT BEAMS, HEADERS. PROVIDE COLUMN CAPS AND POST BASES AT ALL STRUCTURAL LOAD BEARING WOOD BEAMS, INCLUDING EXTERIOR DECKS.

STRUCTURAL MEMBERS INDICATED ARE REQUIRED MINIMUM SIZES AND MAY BE INCREASED TO ALIGN WITH ADJACENT FRAMING MEMBERS AS NECESSARY OR REQUIRED WITHOUT ADDITIONAL STRUCTURAL ENGINEERING AT THE GENERAL CONTRACTOR/OWNER'S DISCRETION.

NOTCHES IN THE TOP AND BOTTOM OF DIMENSIONAL LUMBER JOISTS SHALL NOT EXCEED 1/6 OF THE DEPTH OF THE JOIST, AND SHALL NOT BE LOCATED IN THE MIDDLE ONE THIRD (1/3) OF THE SPAN. NOTCHES AT THE JOIST ENDS SHALL NOT EXCEED 1/4 OF THE JOIST DEPTH. HOLES THROUGH THE JOISTS SHALL NOT BE WITHIN 2" OF THE TOP AND BOTTOM OF THE JOIST. THE HOLE DIAMETER SHALL NOT EXCEED 1/3 OF THE JOIST DEPTH.

FLUSH BEAMS INDICATED MAY BE DROPPED AT THE GENERAL CONTRACTOR/OWNER'S DISCRETION. VERIFY AND COORDINATE WITH ARCHITECTURAL, ELECTRICAL AND MECHANICAL DRAWINGS FOR COMPATIBILITY PRIOR TO INSTALLATION.

ALL INTERIOR WALLS SHALL BE MINIMUM 2x4 (S.P. STUD GRADE) @ 16" O.C. W/ ½" THICK GYP. WALL BOARD (UNBLOCKED) ON MIN. ONE FACE W/ 5d COOLER NAILS @ 4" O.C. TO STUDS, TOP & BOTTOM PLATES.

INSTALL CROSS-BRIDGING OR SOLID BLOCKING BETWEEN FLOOR JOISTS @ 8'-0" O.C. MAXIMUM AS REQUIRED BY CODE OR THE FLOOR JOIST MANUFACTURER.

ALL WOOD SHALL BE MINIMUM 8" ABOVE FINISH GRADE, OR SHALL BE PRESSURE TREATED.

ALL METAL HARDWARE AND CONNECTIONS SHALL BE HOT-DIP GALVANIZED OR STAINLESS STEEL.

DRAWING INDEX

SHEET NO.	DESCRIPTION
S.00	GENERAL NOTES
S.1A	DECK FOUNDATION PLAN
S.1B	DECK FRAMING PLAN
S.1C	EXISTING ROOF FRAMING PLAN
S.3A	STRUCTURAL & TYPICAL DETAILS
S.3B	TYPICAL STRUCTURAL DETAILS

NAILING SCHEDULE

REFER IRC 2021, TABLE R602.3(1) FOR FASTENER SCHEDULE

PO Box 735, Lovettsville, VA 20180
571.528.8998 www.mwa-pe.com

Customer: MR. PABLO RIOS

Project Name: 124 W WASHINGTON ST - DECK REPLACEMENT
124 W WASHINGTON ST, CHARLES TOWN WV 25414

SHEET TITLE: GENERAL NOTES

REVISIONS:
Review Set:

MATTHEW W ANDERSON REGISTERED 15111 STATE OF WEST VIRGINIA PROFESSIONAL ENGINEER

Digitally signed by Matthew W. Anderson
Date: 2026.09.16 10:05:18-04'00'

PROJECT NUMBER: 26-482
DATE: 09/16/2026
DESIGNER: MWA PE
SCALE: AS INDICATED
SHEET NUMBER: S.00

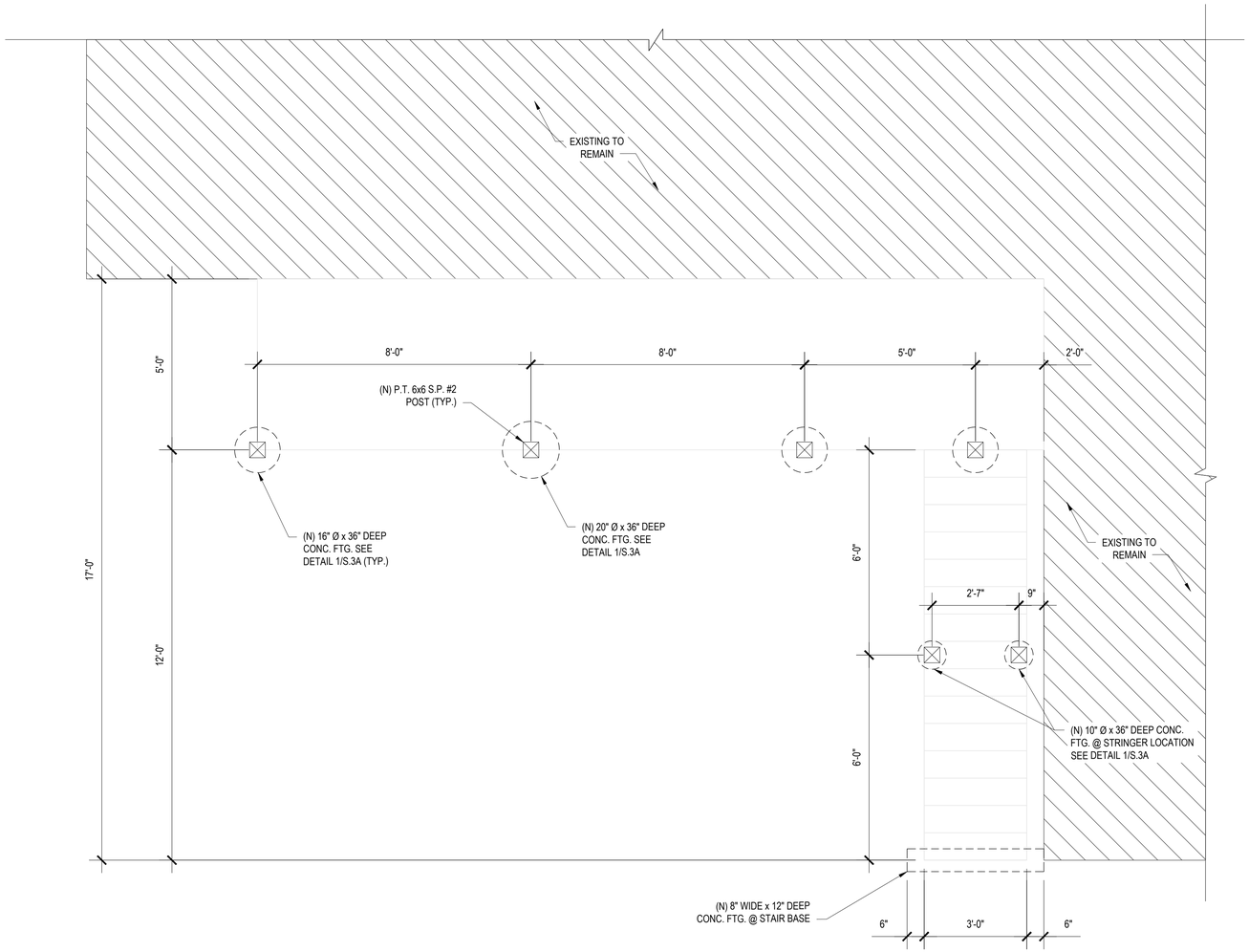

DECK FOUNDATION PLAN
SCALE: 1/2" = 1'-0"

FOUNDATION NOTES:

1. REFER TO ARCH. DRAWING FOR DIMENSIONS.
2. FOOTING SIZE HAS BEEN CALCULATED FOR MINIMUM 1500 PSF SOIL BEARING CAPACITY.
3. FIELD VERIFY ALL DIMENSIONS BEFORE START OF THE CONSTRUCTION AND NOTIFY STRUCTURAL ENGINEER IF ANY DISCREPANCY.
4. PROVIDE 30" MIN. FROST DEPTH FOR ALL FOOTING BEARINGS.
5. REFER TO SHEET S.00 FOR STRUCTURAL NOTES.

DRAWING LEGEND

DRAWN AS	DESCRIPTION
⊠	(N) CIRCULAR FOOTING WITH (N) WOOD POST
TYP.	TYPICAL
U.N.O.	UNLESS NOTED OTHERWISE

IMPORTANT NOTES :-

CONTRACTOR TO FIELD VERIFY EXISTING FOUNDATION CONDITION PRIOR TO COMMENCEMENT OF WORK. CONTACT MATTHEW ANDERSON FOR CONSULTATION IF ANY DISCREPANCY IS FOUND BETWEEN ACTUAL CONDITION AND THAT SHOWN IN THESE DRAWINGS. REVISED DRAWINGS WILL BE ISSUED BASED ON THAT.

PO Box 735, Lovettsville, VA 20180
571.528.8998 www.mwa-pe.com

Customer: MR. PABLO RIOS

Project Name: 124 W WASHINGTON ST - DECK REPLACEMENT
124 W WASHINGTON ST, CHARLES TOWN WV 25414

SHEET TITLE: DECK FOUNDATION PLAN

REVISIONS:
Review Set:

MATTHEW W ANDERSON REGISTERED 15111 STATE OF WEST VIRGINIA PROFESSIONAL ENGINEER

Digitally signed by Matthew W. Anderson
Date: 2026.09.16 10:05:18-04'00'

PROJECT NUMBER:	26-482
DATE:	09/16/2026
DESIGNER:	MWA PE
SCALE:	AS INDICATED
SHEET NUMBER:	S.1A

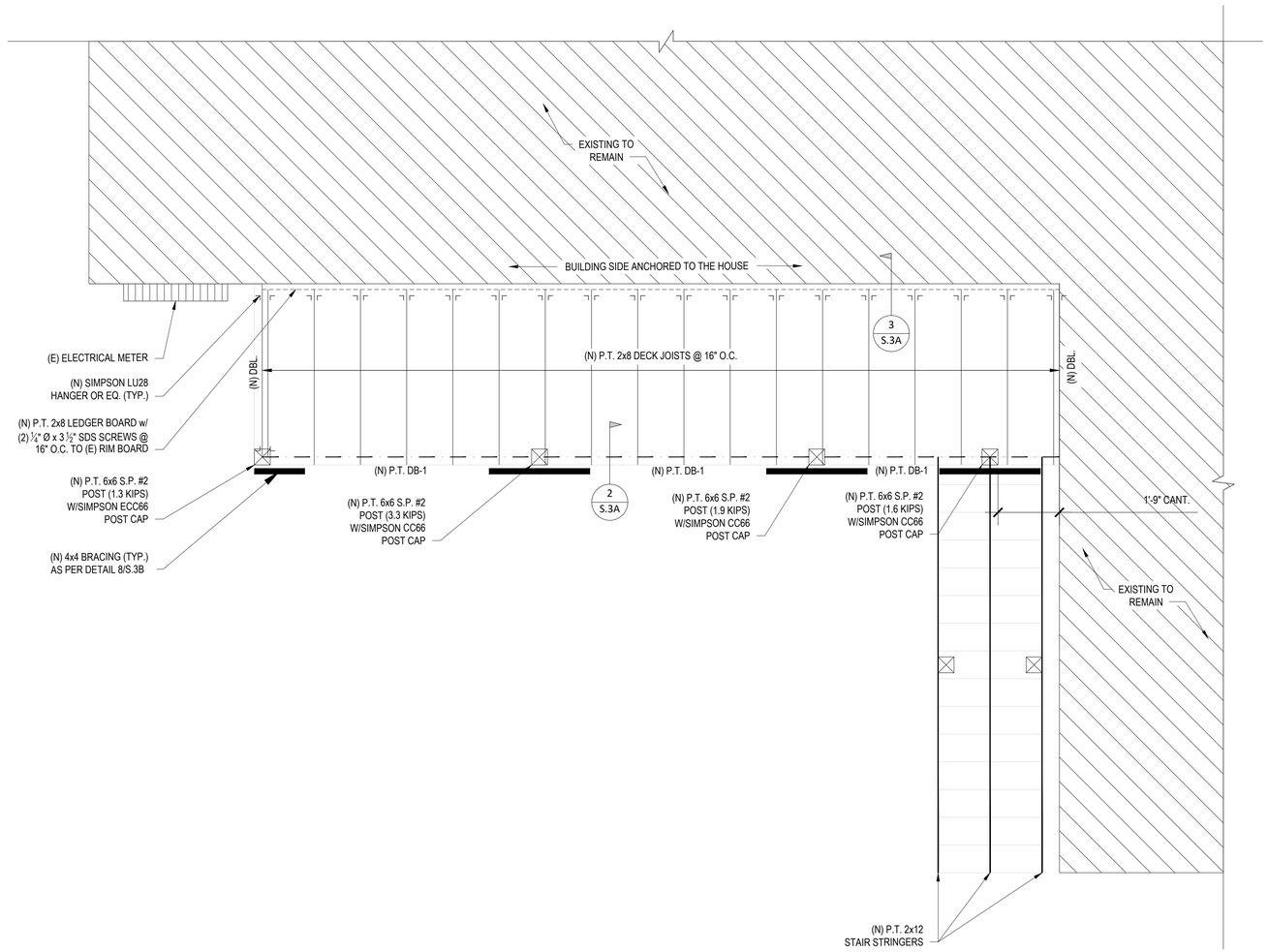

DECK FRAMING PLAN
SCALE: 1/2" = 1'-0"

DECK FRAMING PLAN NOTES:

1. FRAMING SUPPORTING ELEMENTS HAVE BEEN DESIGNED FOR LOADING AS GIVEN IN STRUCTURAL NOTES.
2. DECK JOIST LAYOUT SHOWN IN THE FRAMING PLAN IS ONLY FOR GUIDANCE & SHALL NOT BE USED AS SHOP DRAWINGS. SUPPLIER TO ENSURE THE UNOBSTRUCTED PLUMBING, HVAC OPENING & HEADROOM CLEARANCE.
3. PROVIDE SOLID BLOCKING/CONTINUOUS POST ALL THE WAY TO FOUNDATION TO PROVIDE CONTINUOUS BEARING PATH.
4. WHERE SIMPSON HARDWARE IS SLIGHTLY WIDER THAN BEAM/JOIST, PROVIDE SHIM MATERIAL FOR FLUSH INSTALLATION.
5. REFER TO SHEET S.00 FOR STRUCTURAL NOTES.

DRAWING LEGEND

DRAWN AS	DESCRIPTION
———	(N) DECK JOIST
- - - - - -	(N) LEDGER
— — —	(N) BEAM
▒ ☒	(N) LUMBER POSTS
☐	POST ABOVE
⌟ ⌞	(N) SIMPSON HANGER
TYP.	TYPICAL
P.T.	PRESSURE TREATED
U.N.O.	UNLESS NOTED OTHERWISE

IMPORTANT NOTES :-

CONTRACTOR TO FIELD VERIFY EXISTING FRAMING CONDITION PRIOR TO COMMENCEMENT OF WORK. CONTACT MATTHEW ANDERSON FOR CONSULTATION IF ANY DISCREPANCY IS FOUND BETWEEN ACTUAL CONDITION AND THAT SHOWN IN THESE DRAWINGS. REVISED DRAWINGS WILL BE ISSUED BASED ON THAT.

BEAM SCHEDULE

MARK	SIZE
DB-1	(2) 2x8 S.P. #2

PO Box 735, Lovettsville, VA 20180
571.528.8998 www.mwa-pe.com

Customer: MR. PABLO RIOS

Project Name: 124 W WASHINGTON ST - DECK REPLACEMENT

124 W WASHINGTON ST, CHARLES TOWN WV 25414

SHEET TITLE: DECK FRAMING PLAN

REVISIONS:
Review Set:

MATTHEW W ANDERSON REGISTERED 15111 STATE OF WEST VIRGINIA PROFESSIONAL ENGINEER

Digitally signed by Matthew W. Anderson
Date: 2026.09.16 10:05:18-04'00'

PROJECT NUMBER:	26-482
DATE:	09/16/2026
DESIGNER:	MWA PE
SCALE:	AS INDICATED
SHEET NUMBER:	S.1B

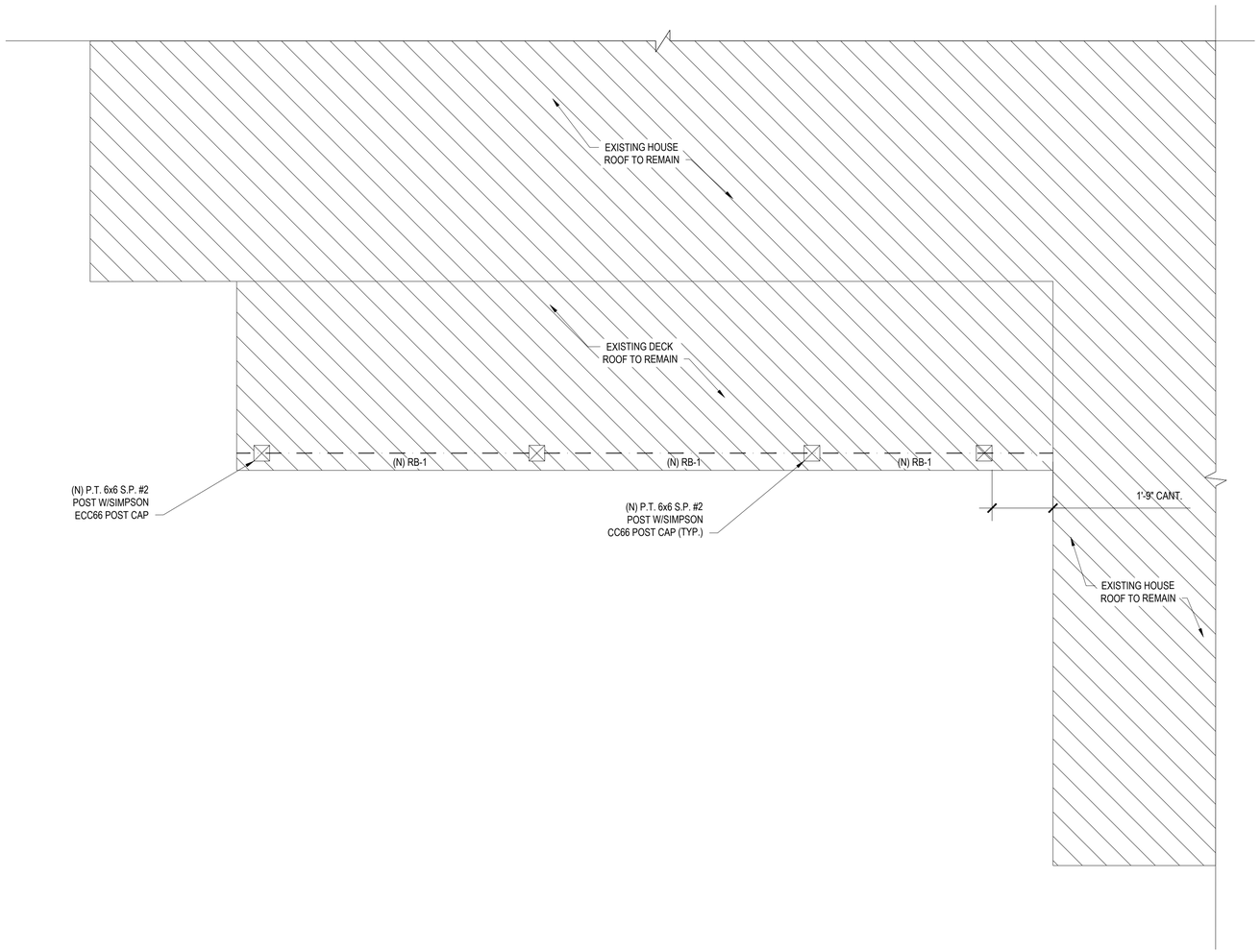

EXISTING ROOF FRAMING PLAN
SCALE: 1/2" = 1'-0"

ROOF FRAMING PLAN NOTES:

1. ALL ROOF FRAMING SHALL BE (E) 2x RAFTERS UNLESS OTHERWISE NOTED.
2. PROVIDE SOLID BLOCKING/CONTINUOUS POST ALL THE WAY TO FOUNDATION TO PROVIDE CONTINUOUS BEARING PATH.
3. WHERE SIMPSON HARDWARE IS SLIGHTLY WIDER THAN BEAM/JOIST, PROVIDE SIM MATERIAL FOR FLUSH INSTALLATION.
4. REFER TO SHEET S.00 FOR STRUCTURAL NOTED.

DRAWING LEGEND

DRAWN AS	DESCRIPTION
▮ ☒	(N) LUMBER POSTS
— — —	(N) BEAM

IMPORTANT NOTES :-

CONTRACTOR TO FIELD VERIFY EXISTING ROOF FRAMING CONDITION PRIOR TO COMMENCEMENT OF WORK. CONTACT MATTHEW ANDERSON FOR CONSULTATION IF ANY DISCREPANCY IS FOUND BETWEEN ACTUAL CONDITION AND THAT SHOWN IN THESE DRAWINGS. REVISED DRAWINGS WILL BE ISSUED BASED ON THAT.

BEAM SCHEDULE

MARK	SIZE
RB-1	(2) 2x8 S.P. #2

PO Box 735, Lovettsville, VA 20180
571.528.8998 www.mwa-pe.com

Customer: MR. PABLO RIOS

Project Name: 124 W WASHINGTON ST - DECK REPLACEMENT
124 W WASHINGTON ST, CHARLES TOWN WV 25414

SHEET TITLE: EXISTING ROOF FRAMING PLAN

REVISIONS:
Review Set:

MATTHEW W ANDERSON
REGISTERED
15111
STATE OF WEST VIRGINIA
PROFESSIONAL ENGINEER

Digitally signed by Matthew W. Anderson
Date: 2026.09.16 10:05:18-04'00'

PROJECT NUMBER:	26-482
DATE:	09/16/2026
DESIGNER:	MWA PE
SCALE:	AS INDICATED
SHEET NUMBER:	S.1C

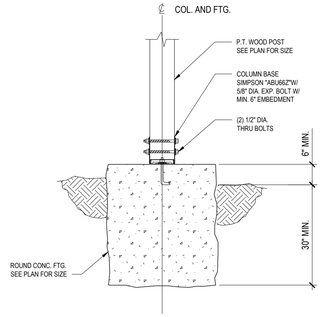

1 DETAIL @ POST TO CIRCULAR FOOTING SCALE: N.T.S

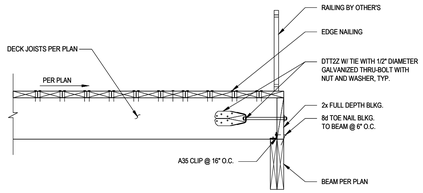

2 DETAIL @ DECK JOIST SCALE: N.T.S

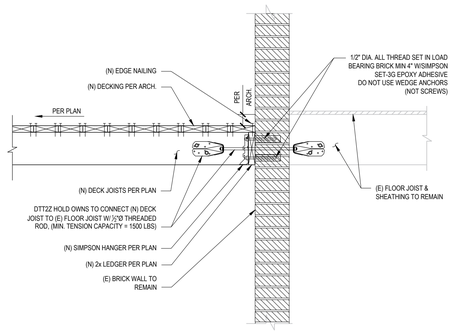

3 DETAIL @ (E) FLOOR JOIST TO DECK JOIST CONNECTION SCALE: N.T.S

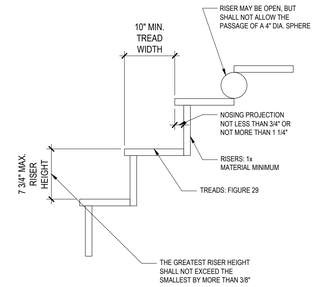

4 TREAD AND RISER DETAIL SCALE: N.T.S

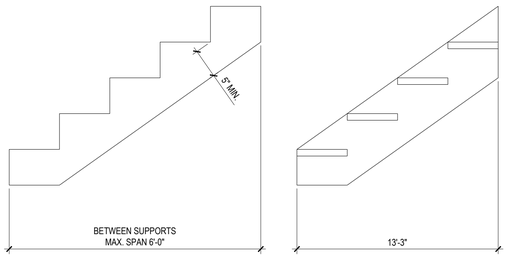

5 STAIR STRINGER REQUIREMENTS SCALE: N.T.S

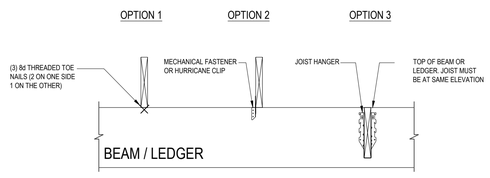

6 JOIST TO BEAM / LEDGER CONNECTION SCALE: N.T.S

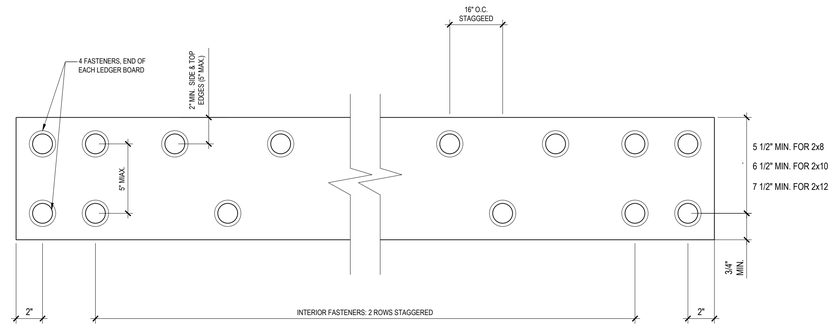

7 PLACEMENT OF LAG SCREWS & BOLTS IN LEDGERS SCALE: N.T.S

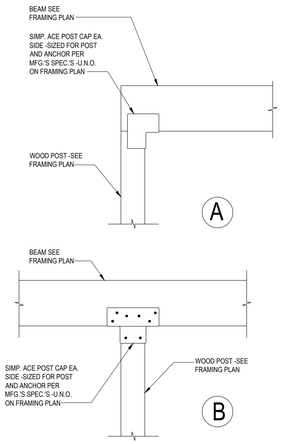

8 TYPICAL DETAIL @ BEAM TO POST CONN. SCALE: N.T.S

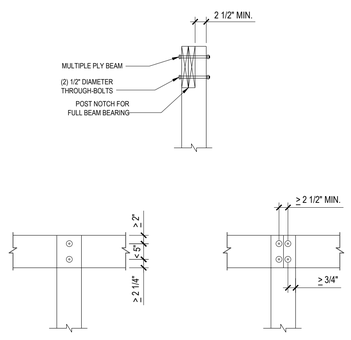

9 NOTCHED POST TO BEAM CONNECTION SCALE: N.T.S

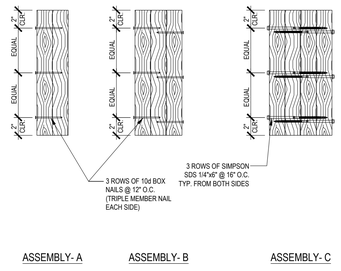

10 TYPICAL MULTI-MEMBER CONNECTION SCALE: N.T.S

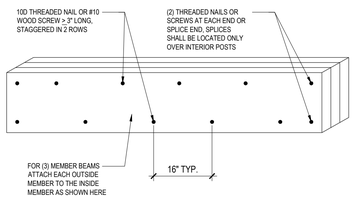

11 BUILT-UP BEAM CONNECTION SCALE: N.T.S

MATTHEW W ANDERSON REGISTERED 15111 STATE OF WEST VIRGINIA PROFESSIONAL ENGINEER

Digitally signed by Matthew W. Anderson
Date: 2026.09.16 10:05:18-04'00'

PO Box 735, Lovettsville, VA 20180
571.528.8998 www.mwa-pe.com

Customer: MR. PABLO RIOS

Project Name: 124 W WASHINGTON ST - DECK REPLACEMENT
124 W WASHINGTON ST, CHARLES TOWN WV 25414

SHEET TITLE: STRUCTURAL & TYPICAL DETAILS

REVISIONS: Review Set:

PROJECT NUMBER:	26-482
DATE:	09/16/2026
DESIGNER:	MWA PE
SCALE:	AS INDICATED
SHEET NUMBER:	S.3A

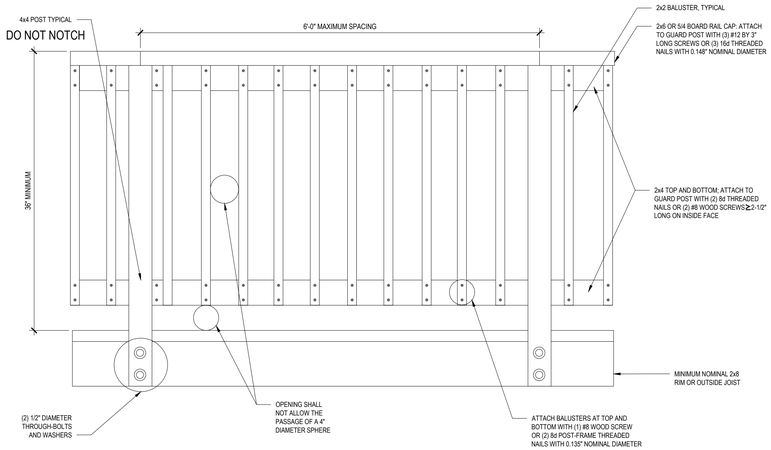

1 DETAIL GUARD RAIL SCALE: N.T.S

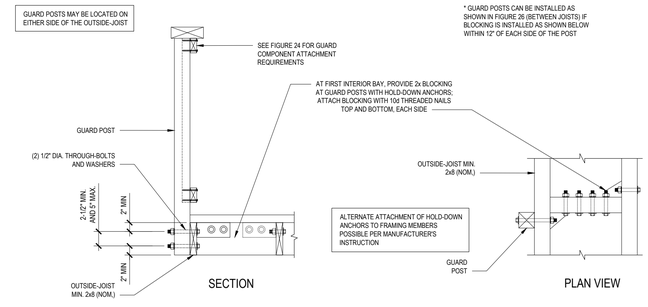

2 DETAIL GUARD POST TO OUTSIDE-JOIST SCALE: N.T.S

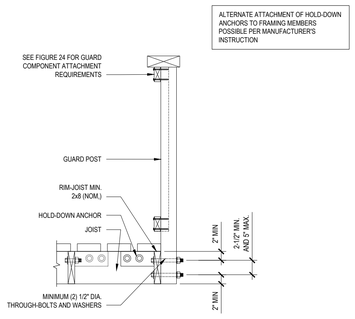

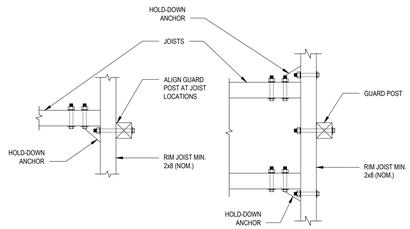

3 DETAIL GUARD POST TO RIM JOIST SCALE: N.T.S

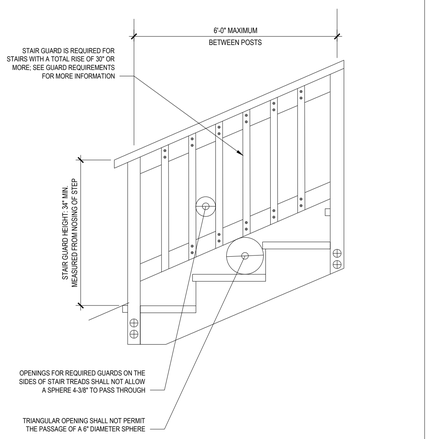

4 DETAIL STAIR GUARD SCALE: N.T.S

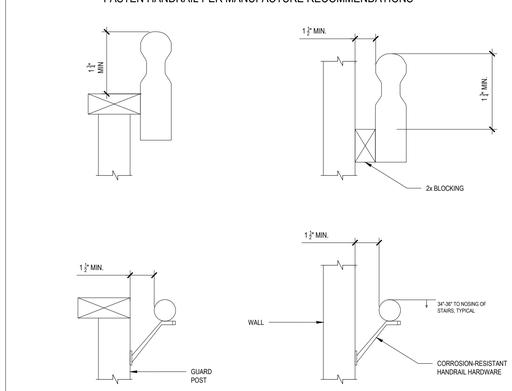

5 DETAIL HANDRAIL MOUNTING SCALE: N.T.S

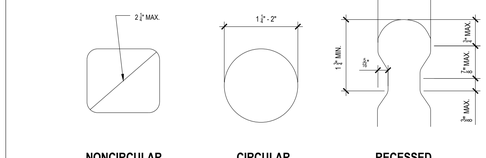

6 DETAIL HANDRAIL GRIP SIZES SCALE: N.T.S

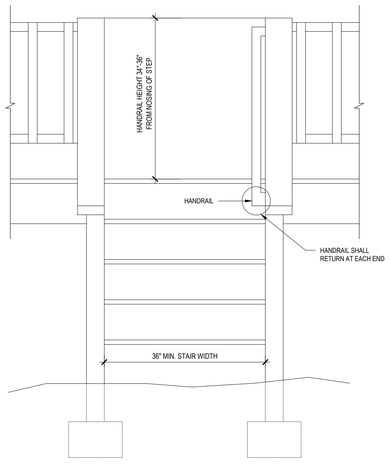

7 DETAIL STAIR REQUIREMENTS SCALE: N.T.S

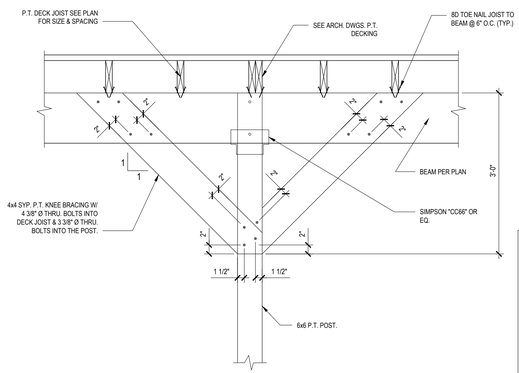

8 DETAIL @ KNEE BRACE SCALE: N.T.S

9 NOT USED SCALE: N.T.S

PO Box 735, Lovettsville, VA 20180
571.528.8998 www.mwa-pe.com

Customer: MR. PABLO RIOS

Project Name: 124 W WASHINGTON ST - DECK REPLACEMENT
124 W WASHINGTON ST, CHARLES TOWN WV 25414

SHEET TITLE: TYPICAL STRUCTURAL DETAILS

REVISIONS:
Review Set:

MATTHEW W ANDERSON REGISTERED 15111 STATE OF WEST VIRGINIA PROFESSIONAL ENGINEER

Digitally signed by Matthew W. Anderson
Date: 2026.09.16 10:05:18-04'00'

PROJECT NUMBER:	26-482
DATE:	09/16/2026
DESIGNER:	MWA PE
SCALE:	AS INDICATED
SHEET NUMBER:	S.3B