CITY OF CHARLES TOWN

CITY COUNCIL
AGENDA • MAY 5, 2025

Regular Session **COUNCIL CHAMBERS** **7:00 PM**
101 E Washington Street, Charles Town, WV 25414

CALL TO ORDER

1. MOMENT OF SILENCE AND PLEDGE OF ALLEGIANCE

2. APPROVAL OF MINUTES

: **2025-515:** City Council Special Council Meeting - April 15, 2025
CouncilMinutes__Special_15April2025_draft_rmt.pdf

: **2025-516:** City Council Meeting Minutes - April 21, 2025
CityCouncilMeeting_April 21st_Draft_rmt.pdf

3. PUBLIC COMMENT

4. WARD REPORTS

5. MAYOR'S REPORT

: **2025-519:** 200 Block East Washington Parking Discussion

6. COMMITTEE REPORTS

: **2025-509:** Ordinance Committee Report - April 22, 2025
Ordinance Meeting Minutes April 22, 2025.pdf

: **2025-510:** Charles Town Parks and Recreation Commission Report - April 24, 2025
Parks and Rec Meeting Mins - April 2025.pdf

: **2025-511:** Infrastructure Committee Report - April 28, 2025
Infrastructure Committee Report April 2025.pdf
Augustine Avenue Email.pdf

: **2025-520:** Finance Committee Report - April 30, 2025
Finance Committee Report_30Apr2025.pdf

7. CITY MANAGER REPORT

: **2025-531:** City Manager's Report - May 5, 2025
City Manager Report - May 5, 2025.pdf

8. POLICE CHIEF REPORT

9. UNFINISHED BUSINESS

: **2025-366:** Sidewalk Improvement Program (SIP) - Walkability Component

SIP.pdf

: **2025-504:** Charles Town Parks and Recreation Commission Discussion

: **2025-506:** Select Committee Letter for the Hill Farm Property, LLC Annexation
Select Committee for the Hill Farm Property Annexation.pdf

: **2025-522:** B&O Status - APUS - Possible Executive Session

10. NEW BUSINESS

: **2025-507:** Memorandum of Understanding (MOU) with The Martinsburg Initiative - Police Social Worker Program
Agreement Martinsburg Initative_2025_Draft.pdf

: **2025-508:** Memorandum of Understanding (MOU) with Charles Town Now - Possible Executive Session

: **2025-512:** *BR2025-03*: Norborne Glebe Phase 11 - Bond Initiation
1. Staff Report.pdf
2. Application.pdf
3. Bond estimate.xlsx
4. KH Review.pdf

: **2025-513:** BR2025-04: Norborne Glebe Phase 12 - Bond Initiation
1. Staff Report.pdf
2. Application.pdf
3. Bond estimate.xlsx
4. KH Review.pdf

: **2025-514:** BR2025-05: Norborne Glebe Phase 13 - Bond Initiation
1. Staff Report.pdf
2. Application.pdf
3. Bond estimate.xlsx
4. KH Review.pdf

: **2025-517:** Ordinance Committee's Pending Ordinance List Discussion

: **2025-518:** Approval of Audit RFP
Audit Proposal Scoring Sheets.pdf

: **2025-521:** Charles Town African American Cemetary Update/Council Committee Appointments
Council Select Committee.pdf

11. REFERRALS TO COMMITTEES/COMMISSIONS

12. APPROVAL OF BILLS

: **2025-524:** Payment of Bills - May 5, 2025
CAPITAL RESERVE COUNCIL REPORT 2025-05-01.pdf
GEN FUND COUNCIL REPORT 2025-05-01.pdf
PARKS N REC COUNCIL REPORT 2025-05-01.pdf
POLICE PENSION COUNCIL REPORT 2025 05 01.pdf

13. ADJOURNMENT

14. INFORMATION ONLY - NEXT MEETING, Monday, May 19, 2025, at 7:00PM

: **2025-525:** Signed Resolution with Division of Highways
Complete_with_Docusign_1_Wright_Denny_Inter.pdf

: **2025-526:** Arbor Day Proclamation
Arbor Day 2025 Proclamation.pdf

: **2025-527:** Charles Town Utility Board Meeting Minutes - April 9, 2025
2025.04.09 UB MINUTES .pdf

: **2025-528:** Finance Policy
Finance Policy Revised.pdf

: **2025-529:** Employee Handbook
Handbook - Final 4-21-25.pdf

: **2025-530:** Article 907 - Outdoor Dining
2025-003 - Article 907 Outdoor Dining - signed April 7th.pdf

15. NOTICE: The Public May View the Meeting Live by Clicking on the Event Link at:

https://www.charlestownwv.us/government/agendas-and-minutes/

City Council
101 East Washington Street
Charles Town, WV 25414

Meeting: 05/05/25
Department: City Council
Category: Report
Initiator:

SCHEDULED

AGENDA ITEM (ID #)

2025-515: City Council Special Council Meeting - April 15, 2025

ATTACHMENTS:

- CouncilMinutes__Special_15April2025_draft_rmt.pdf

CITY OF CHARLES TOWN

CITY COUNCIL

MINUTES • April 15, 2025

Special Meeting **Council Chambers** **6:00 PM**

101 East Washington Street, Charles Town, WV 25414

CALL TO ORDER

Attendee Name	Title	Status	Arrived
Bob Trainor	Mayor	Present	
James Kratovil	Councilmember	Present	
Elizabeth Ricketts	Councilmember	Present	
Jeff Hynes	Councilmember	Present	
Kevin Tester	Councilmember	Present	
Julie Philabaum	Councilmember	Present	
Micheal George	Councilmember	Present	
Andie Sugrue	Councilmember	Present	

Mr. John Nissel, City Manager; Ms. Cindy Rezmer, Operations Director; and Ms. Lori Nice, Finance Director were also in attendance.

1. PUBLIC COMMENT

No one signed up for public comment.

2. NEW BUSINESS

2025-446: Approval of FY2026 Levy Rate

Ms. Philabaum moved to approve the FY2026 Levy Rate of 11.34/100, the adjusted [revised] FY2026 General Fund Budget, and the FY2026 Coal Severance Budget. Mr. Hynes seconded the motion, and it passed by unanimous vote.

RESULT:	**APPROVED [UNANIMOUS]**
MOVER:	Julie Philabaum
SECONDER:	Jeff Hynes
AYES:	Kratovil, Ricketts, Hynes, Tester, Philabaum, George, Sugrue

3. ADJOURNMENT

Mayor Trainor asked if there was any other business to come before the Council. Hearing none he adjourned the meeting at 6:04PM.

4. NOTICE: The Public May View the Meeting Live by Clicking on the Event Link at: https://www.charlestownwv.us/government/agendas-and-minutes/

City Council
101 East Washington Street
Charles Town, WV 25414

Meeting: 05/05/25
Department: City Council
Category: Report
Initiator:

SCHEDULED

AGENDA ITEM (ID #)

2025-516: City Council Meeting Minutes - April 21, 2025

ATTACHMENTS:
- CityCouncilMeeting_April 21st_Draft_rmt.pdf

CITY OF CHARLES TOWN

CITY COUNCIL

MINUTES • April 21, 2025

Regular Meeting **Council Chambers** **7:00 PM**

101 East Washington Street, Charles Town, WV 25414

CALL TO ORDER

Attendee Name	Title	Status	Arrived
Bob Trainor	Mayor	Present	
James Kratovil	Councilmember	Present	
Elizabeth Ricketts	Councilmember	Present	
Jeff Hynes	Councilmember	Present	
Kevin Tester	Councilmember	Present	
Julie Philabaum	Councilmember	Present	
Micheal George	Councilmember	Present	
Andie Sugrue	Councilmember	Present	

Mr. John Nissel, City Manager; Ms. Alissa Meeks, Community Development Director; Ms. Cindy Rezmer, Operations Director; Ms. Lori Nice, Finance Director; Ms. Liz Cook, Business Development/Downtown Coordinator; Mr. Cory Lewis, Code Compliance Officer; and Chief Chris Kutcher, Charles Town Police Department (CTPD) were also in attendance.

1. MOMENT OF SILENCE AND PLEDGE OF ALLEGIANCE

2. APPROVAL OF MINUTES

2025-459: City Council Meeting Minutes - April 7, 2025

The following changes were made to the minutes:

Packet page 9, New Business, Agenda Item 2025-376:

First paragraph, first line: replace "…**Sustainable Solutions…"** with **"…Sustainable Strategies…"**

Second paragraph, first line: replace **"…Sustainable Solutions**…" with **"…Sustainable Strategies…"**

Packet page 10, New Business, Agenda Item 2025-410:

Replace **"…until the May 5, 2025 Council meeting…"** with **"…until the issue is taken up by the Parks and Recreation Commission…"**

Before the vote results table:

Add **"Note: During subsequent discussion, Council agreed that this agenda item will tentatively be placed on the May 5, 2025, Council meeting agenda."**

Ms. Ricketts moved to approve the minutes as amended. Mr. Kratovil seconded the motion, and it passed by unanimous vote.

RESULT:	**APPROVED [UNANIMOUS]**
MOVER:	Elizabeth Ricketts
SECONDER:	James Kratovil
AYES:	Kratovil, Ricketts, Hynes, Tester, Philabaum, George, Sugrue

3. PUBLIC COMMENT

No one signed up for public comment.

4. WARD REPORTS

Ward #1

Mr. Kratovil had nothing to report.

Ms. Ricketts reported that the Eastern Panhandle Transportation Authority (EPTA) currently has a survey open until May 2, 2025. The purpose is to receive feedback on proposed changes to transit routes.

Ward #2

Mr. Hynes had nothing to report.

Mr. Tester had nothing to report.

Ward #3

Ms. Philabaum had nothing to report.

Ward #4

Mr. George had nothing to report.

Ms. Sugrue had nothing to report.

5. MAYOR'S REPORT

Mayor Trainor reported that the City received an email from the Jefferson County Administrator stating that the County Social Services [homelessness liaison] position has been included in a new County grant writer position and that the monetary contributions previously requested from the municipalities are no longer required. Charles Town's contribution check of $11,908 has been returned to the City.

6. COMMITTEE REPORTS

2025-460: Finance Committee Meeting Report - April 9, 2025

Mayor Trainor reviewed the Finance Committee Report with Council.

2025-461: Personnel Committee Meeting Report - April 14, 2025

Mr. George reviewed the Personnel Committee Report with Council.

7. CITY MANAGER REPORT

2025-463: City Manager Report - April 21, 2025

Mr. Nissel reviewed the City Manager Report with Council.

8. POLICE CHIEF REPORT

Chief Kutcher had nothing to report.

9. UNFINISHED BUSINESS

2025-447: Article 111 Council and Finance Policy Discussion

Mr. George moved to remove this agenda item from the Table. Mr. Tester seconded the motion, and there were objections.

Mr. Hynes moved to refer the review of the City's Fiscal Policy, in particular Section 1.09 Purchasing and Bid Policy, to the Finance Committee at their meeting in July 2025. Mr. George seconded the motion, and it passed by unanimous vote.

RESULT:	**APPROVED [UNANIMOUS]**
MOVER:	Jeff Hynes
SECONDER:	Micheal George
AYES:	Kratovil, Ricketts, Hynes, Tester, Philabaum, George, Sugrue

2025-470: Jefferson County Development Authority Update

Ms. Ricketts, the City's Jefferson County Development Authority (JCDA) representative, updated the Council on the JCDA's April 21, 2025, board meeting and noted that the Board voted to send the original 2024 JCDA By-Laws to the Jefferson County Commission for their approval.

10. NEW BUSINESS

2025-449: Charles Town Employee Handbook Review and Approval

Ms. Philabaum moved to approve the updated Charles Town Employee Handbook [to include the updated section 3.07 provided to Council via table drop and with minor corrections to the table of contents and effective date]. Mr. George seconded the motion, and it passed by unanimous vote.

RESULT:	**APPROVED [UNANIMOUS]**
MOVER:	Julie Philabaum
SECONDER:	Micheal George
AYES:	Kratovil, Ricketts, Hynes, Tester, Philabaum, George, Sugrue

2025-450: Update on the Annexation Process of the Hill Farm Property, LLC and Possible Committee Formation

Ms. Meeks updated the Council on the Hill Farm Property, LLC annexation status.

The Council agreed to form an annexation special committee for the proposed Hill Farm Perry Property, LLC and to assign Mr. Kratovil and Mr. Hynes to the aforementioned committee, to be augmented with appropriate City staff members. The applicable committee documentation will be included in the May 5, 2025, Council meeting agenda.

2025-464: Arbor Day 2025 Proclamation

Mayor Trainor presented the 2025 Arbor Day Proclamation to the Council.

2025-465: General Fund Revision #5

Ms. Philabaum moved to approve the FY2025 General Fund Budget Revision #5. Mr. George seconded the motion, and it passed by a 6-1 vote.

RESULT:	**APPROVED [6-1]**
MOVER:	Julie Philabaum
SECONDER:	Micheal George
AYES:	Kratovil, Ricketts, Tester, Philabaum, George, Sugrue
NAYS:	Hynes

2025-466: Capital Fund Revision #3

Ms. Philabaum moved to approve the Capital Fund Revision #3. Mr. George seconded the motion, and it passed by a 6-1 vote.

RESULT:	**APPROVED [6-1]**
MOVER:	Julie Philabaum
SECONDER:	Micheal George
AYES:	Kratovil, Ricketts, Tester, Philabaum, George, Sugrue
NAYS:	Hynes

2025-467: Article 136 and Rental Registry Application Process and Fee

Mr. Kratovil moved to refer Article 136 Rental Dwelling Units to the Ordinance Committee. Ms. Philabaum seconded the motion.

Mr. Hynes moved that Council receive a status update on the aforementioned ordinance at the July 21, 2025, Council meeting. Mr. George seconded the motion, and it passed by a 6-1 vote.

Ayes: Ricketts, Hynes, Tester, Philabaum, George, Sugrue
Nays: Kratovil

The original motion passed by a 6-1 vote.

RESULT:	**APPROVED [6-1]**
MOVER:	James Kratovil
SECONDER:	Julie Philabaum
AYES:	Kratovil, Hynes, Tester, Philabaum, George, Sugrue
NAYS:	Ricketts

2025-468: Department of Transportation, Division of Highways Agreement with Jefferson County Board of Education regarding Wright Denny School Traffic Control

Ms. Ricketts moved to authorize the Resolution of the Council of the City of Charles Town, West Virginia, Authorizing Execution of an Agreement with the West Virginia Department of Transportation, Division of Highways, with Regard to Establishment and Maintenance of a School Area Traffic Control System Within the Municipal Limits of the City of Charles Town, Jefferson County, West Virginia. Mr. Hynes seconded the motion, and it passed by unanimous vote.

RESULT:	**APPROVED [UNANIMOUS]**
MOVER:	Elizabeth Ricketts
SECONDER:	Jeff Hynes
AYES:	Kratovil, Ricketts, Hynes, Tester, Philabaum, George, Sugrue

2025-469: Police Social Worker Program Presentation - Margaret Kursey

Ms. Margaret Kursey of The Martinsburg Initiative presented a pilot program proposal, dubbed the Charles Town Initiative, that would embed a police social worker with the Charles Town Police Department to assist with various community health, adverse childhood experiences, and other domestic issues.

The Martinsburg Initiative would be responsible for the employment and oversight of the embedded police social workers. Ms. Kursey anticipates $38,000 to fund a one-year pilot program and approximately $75,000 annually thereafter. Potential federal, state, and municipal grants would provide funding for the proposed position.

Mr. Hynes moved to include a Memorandum of Understanding (MOU) with The Martinsburg Initiative and discussion on the May 5, 2025, Council meeting agenda. Mr. George seconded the motion, and it passed by unanimous vote.

RESULT:	**APPROVED [UNANIMOUS]**
MOVER:	Jeff Hynes
SECONDER:	Micheal George
AYES:	Kratovil, Ricketts, Hynes, Tester, Philabaum, George, Sugrue

2025-462: Real Estate Redevelopment Study - Possible Executive Session

Mr. Tester moved to enter into Executive Session. Mr. Hynes seconded the motion, and there were no objections.

Mayor Trainor declared the Council in Executive Session.

Mayor Trainor declared the Council out of Executive Session.

Mr. Hynes moved to direct staff to work with Charles Town Now to develop a Memorandum of Understanding (MOU) on a real estate development plan and to include it in the May 5, 2025, Council agenda for a vote. Ms. Sugrue seconded the motion, and it passed by unanimous vote.

RESULT:	**APPROVED [UNANIMOUS]**
MOVER:	Jeff Hynes
SECONDER:	Andie Sugrue
AYES:	Kratovil, Ricketts, Hynes, Tester, Philabaum, George, Sugrue

11. REFERRALS TO COMMITTEES/COMMISSIONS

Article 136 – Rental Registry Application Process and Fee [Rental Dwelling Units], per agenda item 2045-467, was referred to the Ordinance Committee.

12. APPROVAL OF BILLS

2025-471: Payment of Bills - April 21, 2025

Mr. Kratovil moved to approve the bills for payment. Hearing no objections, Mayor Trainor declared the bills approved for payment.

13. ADJOURNMENT

Mayor Trainor asked if there was any other business to come before the Council. Hearing none he adjourned the meeting at 9:25PM.

14. INFORMATION ONLY - NEXT MEETING Monday, May 5, 2025, at 7:00PM

2025-453: Jefferson County Parks and Recreation Department Fireworks Event Request

2025-454: Jefferson County Development Authority's (JCDA) By-Laws

2025-455: Charles Town FY2026 Community Priorities Handout

2025-456: Charles Town Police Department's March Statistical Report

2025-457: Resolution Authorizing the City to Enter into a Transportation Alternatives Project Agreement with the WV Division of Highways for Phase II Construction of the Augustine Avenue Trail

2025-458: Charles Town Utility Board Meeting Minutes - March 26, 2025

15. NOTICE: The Public May View the Meeting Live by Clicking on the Event Link at: https://www.charlestownwv.us/government/agendas-and-minutes/

City Council
101 East Washington Street
Charles Town, WV 25414

Meeting: 05/05/25
Department: City Council
Category: Report
Initiator:

SCHEDULED

AGENDA ITEM (ID #)

2025-519: 200 Block East Washington Parking Discussion

ATTACHMENTS:

City Council
101 East Washington Street
Charles Town, WV 25414

Meeting: 05/05/25
Department: City Council
Category: Report
Initiator:

SCHEDULED

AGENDA ITEM (ID #)

2025-509: Ordinance Committee Report - April 22, 2025

ATTACHMENTS:

- Ordinance Meeting Minutes April 22, 2025.pdf

City of Charles Town Ordinance Committee Report - April 22, 2025

Call to Order:
18:00

Committee Members In Attendance:
Kevin Tester (Chair), Julie Philabaum
Also in attendance: Stephanie Groove: City Attorney
Not Present: Andie Sugrue

Agendda / Discussions:

2025-476: Review and Suggested Recommendations on the pending Ordinance List

Discussion on Which referred Ordinances on our outstanding list should be recommended to drop.

- Reviewed current outstanding Ordinance referral list to make recommendations on which to keep or remove per direction of the Council

Recommendation to City Council:

List of those to remove:

- 155: Creation of an Ordinance creating Article 155 Conversion Therapy
- 156: Creation of an Ordinance creating Article 156 Diversity, Equity, and Inclusion Committee
- 1102: Article 1102 Animals and Fowl, Chapters 1102.11 Dogs generally and 1102.13 Dangerous or vicious animals
- 349: Miscellaneous Rules
- 509: Disorderly Conduct and Peace Disturbance
- Section 22: Sidewalks deferred to Charter

List of those to keep:

- 771: Municipal Service Fee for Yard Waste Pickup
- 741: expanding to include several activities currently not included in exsisting Ordinance
- 951: Garbage Collection

List of those to research:

- 1101: Nuisances - Light Pollution - Research other ordinances statewide to see what if anything can be done
- 1102 (recent referred): Research possibility to work with county Animal Control on cat colony issues
- Outdoor Dining Part 2: Continued research and possible Pilot program

2025-475: Zoning Inspection Section of Charles Town Zoning Code

- Discussed the need to update language to lay out inspections when properties change owners or in business. We already do these but are looking to codify in code.
- Looking at a possible seperate section next to vacant structures/Rental Registrations.

Adjourn and Next Meeting:
Adjourn at 19:10
Next meeting scheduled for
May 15th 2025

City Council
101 East Washington Street
Charles Town, WV 25414

Meeting: 05/05/25
Department: City Council
Category: Report
Initiator:

SCHEDULED

AGENDA ITEM (ID #)

2025-510: Charles Town Parks and Recreation Commission Report - April 24, 2025

ATTACHMENTS:

- Parks and Rec Meeting Mins - April 2025.pdf

City of Charles Town

Parks and Recreation Commission Report
April 2025

24 April 2025 / 6:00 PM / City Hall

I. CALL TO ORDER:

Persons Present:

Commissioners: James Kratovil, Alden Roth, Nate Hartman, Trudy Roth, Mike Slover, Elizabeth Ricketts (Virtual)

Staff: John Nissel, Alissa Meeks, Lori Nice, Stephanie Grove (Virtual)

Guests: Sam Rich (Virtual)

II. APPROVAL OF MINUTES:

February 2025 - *Approve* - **Motion:** J Kratovil; **2nd:** N. Hartman
Unanimous

III. UNFINISHED BUSINESS

2025-360: JMP Pool and Thrasher Contract

Sam Rich of Thrasher provided updated 3D renderings for the pool. Thrasher is to submit final plans and specifications to the state Land Water Conservation Fund office, which will give them approval to bid the project..

Mr. Rich gave an overview of the new designs that incorporated ADA-compliant ramp entry, City of Charles Town seal, and material choices. John Nissel asked Thrasher to provide a quote for artificial turf or other alternatives for the grassy area within the pool fence. Commissioners also discussed the picnic shelter, suggesting to move the fencing to add additional ingress and egress to the shelter. Light fixture and electric outlet suggestions were also made by staff and commissioners. Hartman suggested inverting parts of the City's Seal tiling to make less of the pool floor a dark space.

No Action.

2025-479: Activation and Programming of Parks

Alden Roth presented three race ideas: a 5k run/walk through the majority of City parks, a cyclocross race in Jefferson Memorial Park, and a timed endurance race in Jefferson Memorial Park. Commissioners discussed the merits and drawbacks of the options, the timing of the race, and adjusting the 5k route to be a loop instead of point-to-point. At the suggestion of Elizabeth Ricketts, the Commissioners motioned to form a subcommittee with Mike Slover and Alden Roth to explore the 5k run/walk further. Nissel suggested making a social media post inquiring about the community's interest in joining the subcommittee.

Motion: M Slover; **2nd:** N. Hartman
Unanimous

Alden Roth also brought to the Board's attention that there is a "weird stigma", according to local skateboarders, at the skatepark following the ramps being painted, because the sand added to the paint makes it somewhat hard to roll on and more abrasive if falling on the ramp. John Nissel suggested adding more paint to the ramps to cover some of the sand. Elizabeth Ricketts reminded the Board that two smaller ramps have been ordered and will be installed.

Trudy Roth suggested doing yoga in the park, potentially partnering with a local instructor or studio.

Alissa Meeks notified the Board that Animal Welfare Society has submitted their park rental application for *Bark in the Park.*

2025-480: Capital Improvement Projects (CIP) Schedule

John Nissel reviewed updates for the CIP Schedule:

-Combined the Depot Comprehensive Study with the Parks Master Plan

-Added a request for a utility vehicle for the Parks and Rec Deputy Director

-Added a request for an inflatable movie screen and projector, so that the City doesn't have to rely on borrowing from the county in the future.

No Action.

2025-482: Parks and Recreation Budget

Lori Nice reviewed the budget updates with the Board, pointing out that a surplus in the budget will roll over into the next fiscal year, primarily to pay for the pool construction, discussing uses of the Capital Outlay line item, and tracking City staff's time spent on the parks operations and maintenance. John Nissel suggested creating a 5-year pro forma for the pool after its construction.

No Action.

2025-481: Dedication of Coach Glen Edwards Plaque

The Commissioners motioned to waive the rental fee on pavilion #3 for the dedication ceremony on **July 12, 2025**.

Motion: J. Kratovil; **2nd:** M. Slover
Unanimous

IV. NEW BUSINESS

2025-484: Charles Town Parks and Recreation Commission Discussion

John Nissel explained the pros and cons of turning the Parks and Recreation Commission into a department, and the board discussed several points, including the deed stipulation requiring a member of the Jefferson Memorial Park Board to be a Charles Town Parks and Recreation Commission Board Member. The board agreed to hold off further discussion until after the Deputy Parks and Recreation Director is hired.

No Action.

2025-483: Charles Town Tree Board Business

Elizabeth Ricketts updated the Board about Arbor Day planting on 4/26 at 9 AM and 5/1 at Craighill Estates. Additionally, she provided context about a request from Cornerstone Landscaping to donate a tree and a bench in honor of a young woman who was killed in a car crash. Nate Hartman suggested installing it at the Augustine Avenue Trail. John Nissel will follow up with Cornerstone Landscaping to discuss potential installation locations.

No Action.

2025-485: Parks Updates: Jefferson Memorial, Skate Park, Willingham Knolls, Evitts Run, Happy Retreat, other parks

Jefferson Memorial Park: There will be 200 yards of mulch installed at the upper playground of Jefferson Memorial Park. New basketball hoops were installed at the basketball courts. The pullouts are being paved over the next several weeks. 25 kids are currently registered for summer tennis, more expected. Spring tennis reports are good. The new slide has been ordered. Alissa Meeks brought up the Rotary's desire to partner with the parks for a project, John Nissel reiterated the suggestion of painting the picnic tables. Little Library door was fixed and lots of books have been put in it. Trudy Roth suggested reaching out to the man who ran 3v3 basketball tournament at the park years ago, and reported seeing people play volleyball after the net was installed. Alden Roth similarly saw people playing soccer.

Evitts Run Park: The safety buffer is being installed next week.

Skate Park: Bridge installation starts next week. Benches and picnic tables will be installed. Portajohns have been installed.

Willingham Knolls Park: Portajohns have been installed.

Depot District Park: Old, big tree will be removed soon. Mowing has started.

Nate Hartman asked if there was a desire to receive input from the Board regarding the qualities desired in the Deputy Parks Director. Ricketts advised this hire would typically be handled in house by staff-leadership. Alissa Meeks will send out a survey to commissioners.

No Action.

V. ADJOURNMENT: 07:52 PM

VI. NEXT MEETING: **Thursday, May 22** 6PM at City Hall.

City Council
101 East Washington Street
Charles Town, WV 25414

Meeting: 05/05/25
Department: City Council
Category: Report
Initiator:

SCHEDULED

AGENDA ITEM (ID #)

2025-511: Infrastructure Committee Report - April 28, 2025

ATTACHMENTS:

- Infrastructure Committee Report April 2025.pdf
- Augustine Avenue Email.pdf

Infrastructure Committee Report
City of Charles Town

April 2025

CALL TO ORDER: Monday, April 28, at 4:34 PM

In attendance: Elizabeth Ricketts (Chair), Jim Kratovil, Michael George, John Nissel (staff),Jim Wysong (staff)

UNFINISHED BUSINESS

2025-487: Park Street and Surrounding Area – Traffic Flows and Parking

This item was previously tabled and remains tabled.

2025-488: Anne Street – Traffic Flows

This item was previously tabled and remains tabled.

2025-489: Proposal for a City for Charles Town Infrastructure Retreat Agenda

The committee had previously discussed sending a survey to council members to help rank the priority of the topics proposed. With the changes in Federal and State laws/priorities and the upcoming City Council elections, it was decided to hold off on this process for a few months. Staff let the committee know that previously discussed infrastructure needs/goals will be reflected by the 5 year Capital Improvement Plan (CIP).

2025-490: Grant Opportunity – SS4A

The committee discussed a grant opportunity through Safe Streets for All (SS4A) to address safety concerns and pedestrian improvements to Washington Street, specifically from North Street to Flowing Springs Road. This corridor was identified through the Hagerstown/Eastern Panhandle Metropolitan Planning Organization (HEPMPO) Safety Action Plan as a High Injury area. HEPMPO provided the committee with the initial draft of the Washington Street Corridor Study based on the October 2024 site visit with state, federal, and local transportation specialists.

The grant would be for Implementation, would require the City be the applicant (even though Washington Street is a state road), and would require a 20% match from the City.

Considering the outstanding projects that are stalled with the WVDOT/DOH, the committee at this time does not recommend moving forward with an application.

2025-491: Augustine Avenue Trail Project Update

A stop work order was issued by Division of Highways -Division 5 in April citing Right of Way, soil stability, and drainage issues, all of which should have been addressed throughout the years of engineering, site visits, and monthly meetings with stakeholders. William Hetzer Inc, the contractor, has pulled their equipment from the site.

2025-492: Congress/Lawrence Street Intersection Project Update

Staff updated the committee that there is an option that the City take over the project management from DOH for this intersection improvement project. This could speed up the process but the City needs more information on how the disbursement of associated grant funding will be handled.

The Bald and Golden Eagle study which was required for the project concluded that no eagles will be impacted by this project.

2025-493: Resident Request- Issue of Speeding on S. George Street

This was previously discussed by the committee. Staff will follow up with the Chief of Police about placing the speed monitoring device again and also laying pneumatic tubes to get speed data. The committee will then draft a letter to DOT/DOH with this data and request improvements such as the placement of a Rapid Flashing Beacon and painting fog or parking area lines.

NEW BUSINESS

: 2025-493: Maintenance Director Report

Maintenance Director Wysong provided the committee a thorough report of department activities in the City since the end of January.

For full report, please watch meeting video 4/28/25 . Agenda item 2025-493: Maintenance Director Report *was addressed first in the meeting.*

: 2025-495: Staff Updates

William Hetzer Inc was selected through the bid process for the repaving project. Start date is unknown.

The stormwater study kickoff meeting will take place this week.

The Liberty Street stormwater project is anticipated to begin with Gantz Engineering around June 15, 2025. At that time, new stop signs will be added and new crosswalks will be considered.

ADJOURNMENT

5:12 PM

From: Oliver, Kyle J <kyle.j.oliver@wv.gov>
Sent: Wednesday, April 16, 2025 4:14 PM
To: Alissa Meeks <AMeeks@charlestownwv.us>
Cc: Timothy B Sedosky <timothy.b.sedosky@wv.gov>; Travis W Hayes <travis.w.hayes@wv.gov>; Paul I Picklesimer <paul.i.picklesimer@wv.gov>
Subject: Augustine Avenue Phase I - Construction

Alissa,

Good afternoon. I'm sending this email to catch you up to speed before our call tomorrow on the issues that our engineers and the contractors have run into during the construction phase. After some talks with District 5, we have reached a consensus on the extent of the issues and some of the possible steps for moving forward.

ROW Issues:

- The plans indicate construction in areas that fall outside of our ROW for the project.
- The plans indicate areas where permanent modifications are being made in TCE zones, I.E., fill material.

ROW Possible Solutions:

- Charles Town Purchases the property from the landowners.
- A redesign is made which maintains ROW. The popular suggestion would be building a section of more than 1,500 ft retaining wall, making this a likely pricey option.
- The Width of the project is reduced to fit ROW.

Other Concerns Which (May) Merit Change Orders.

- The soil from the cut will not be suitable to be used as fill for the project. The soil and the ground under it is too wet and unstable to ensure a quality, long-lasting finished product. To our knowledge there has been no item listed for the proper type of fill that would be required. (Estimate of about $100K in material)
- At the 60+00 station #, a drainage culvert has been discovered under the roadway that was not indicated in the plans. This will require Culvert cleaning and PDE that was unaccounted for. It is also likely that a headwall or an application of stone will be needed at the outlets of the pipe. The consultant will need to confirm PDE.
- There is 1300 ft of private fence that will need to be moved which is not indicated in the plans. The fence will need to be moved into a reasonable and secure location with permission from the property owner.

As of right now D5 has issued a cease work letter to the contractor and it is their opinion that we should not have them come back out until we are certain that the design issues and change orders are fully resolved. This is to save the contractors the time and resources of continuing back and forth between resuming and ceasing work on the project.

D5 thinks It is going to be important to finalize these design revisions as soon as we can, so that we can determine the extent of the change orders that will be needed. Once this is resolved, then it will be a good idea to assess the design for the remaining phases and ensure we don't run into these same problems in Phases II & III.

I will be working with the city and within the Planning Division, to determine what the next steps will be. It is unfortunate to come this far and run into setbacks, but the Planning Division will help however we are able to.

Thank you and have a good evening,

--
Kyle Oliver
WV Department of Highways
Planning Division
(304) 205-6207
Beware - This email comes from outside the City of Charles Town

Elizabeth C. Ricketts
(304)397-0115
Charles Town City Councilmember- Ward 1
Charles Town Infrastructure Committee - chair
Charles Town Parks and Recreation Commission - president
Charles Town Tree Board - liaison
Jefferson County Development Authority- city representative
Eastern Panhandle Transit Authority - county representative
Hagerstown/Eastern Panhandle Metropolitan Planning Organization- municipal representative

City Council
101 East Washington Street
Charles Town, WV 25414

Meeting: 05/05/25
Department: City Council
Category: Report
Initiator:

SCHEDULED

AGENDA ITEM (ID #)

2025-520: Finance Committee Report - April 30, 2025

ATTACHMENTS:

- Finance Committee Report_30Apr2025.pdf

City of Charles Town Finance Committee Report
30 April 2025 Meeting

Drafted by: Bob Trainor - Chairman

Call to Order ooa 10:02AM

1. **Persons present:** Finance Committee Members: Ms. Julie Philabaum, Mr. Jeff Hynes, and Mr. Bob Trainor; Financial Director, Ms. Lori Nice; and Accounting Clerk III, Ms. Briana Ballou

2. **Unfinished Business**

2025-496: HdL Update

Staff provided the Committee with an updated status on HdL's activities *(attach (1))*.

Recommendations to the City Council: None, information only

2025-497: License Fee Waiver Request - Possible Executive Session

This agenda item was addressed in Executive Session with agenda items 2025-499and 2025-500 (New Business) and 2025-498 (Unfinished Business)

2025-498: B&O Waiver Requests - Possible Executive Session

This agenda item was addressed in Executive Session with agenda items 2025-499 and 2025-500 (New Business) and 2025-497 (Unfinished Business)

3. **New Business**

2025-499: License Fee Waiver Request – Possible Executive Session

This agenda item was addressed in Executive Session with agenda items 2025-497 and 2025-498 (Unfinished Business) and 2025-500 (New Business)

2025-500: B&O Waiver Requests - Possible Executive Session

The Committee entered into Executive Session to address this agenda item as well as agenda items 2025-497, 2025-498 (Unfinished Business) and 2025-499 (New Business).
After Executive Session, Mr. Hynes moved the following:

Vendor Account Numbers	Committee Action	Remarks
7965 & 7997	**Approve** B&O and License Fee Waiver request	
8308 & 1009	**Approve** License Fee Waiver Request	

Ms. Philabaum seconded the motion and it passed by unanimous vote – 3 to 0.

Vendor Account Numbers	Committee Action	Remarks
1817, 225, & 8238	The Committee took no action on these requests --- require amplifying information	

Recommendations to the City Council: None, information only

2025-501: Audit RFP Contract Award

Per applicable state code, the Audit Committee – Mr. Hynes, Mr. Trainor, and Ms. Nice – reviewed Audit Proposal Score sheets and agreed to recommend Council authorize the Audit contract be awarded to Perry & Associates, CPAs.

Recommendations to the City Council: Authorize staff to award the City's Audit contract to Perry & Associates, CPAs

4. Finance Director Report

2025-502: Discussion of Ordinance 745.24 Assessments

The Committee tabled this agenda item.

Recommendations to the City Council: None, information only

5. Chairman's Report

6. The meeting was adjourned ooa 11:03PM

7. Next Scheduled Finance Committee meeting TBD.

HdL Billing Status

Updated ***30-Apr-25***

Invoices	**Collected**	**50%**	**Less 15%**	**Credit Applied**	**Credit Due**
September 2024 Beginning Balance	$ -	$ -	$ -	$ -	$ 49,750.00
October 2024	$ 40,595.76	$ 20,297.88	$ 14,208.52	$ 6,089.36	$ 43,660.64
November 2024	$ 4,868.38	$ 2,434.19	$ 1,703.93	$ 730.26	$ 42,930.38
December 2024	$ 12,688.18	$ 6,344.09	$ 4,440.86	$ 1,903.23	$ 41,027.15
January 2025	$ 12,139.76	$ 6,069.88	$ 4,248.92	$ 1,820.96	$ 39,206.19
February 2025	$ 9,264.41	$ 4,632.21	$ 3,242.54	$ 1,389.66	$ 37,816.53
March 2025	$ 24,847.28	$ 12,423.64	$ 8,696.55	$ 3,727.09	$ 34,089.43

City Council
101 East Washington Street
Charles Town, WV 25414

Meeting: 05/05/25
Department: City Council
Category: Report
Initiator:

SCHEDULED

AGENDA ITEM (ID #)

2025-531: City Manager's Report - May 5, 2025

ATTACHMENTS:

- City Manager Report - May 5, 2025.pdf

City of Charles Town
101 East Washington Street, P.O. Box 14, Charles Town, WV 25414
Phone: (304) 725-2311 ♦ Web: www.charlestownwv.us

City Manager's Report
May 5, 2025

- Benches and bike racks have been placed at Evitts Run Park supplemented by shrubs to create a safety barrier for kids who are playing in the Park. New benches are scheduled to be installed at the JMP basketball courts.
- The footbridge construction has commenced at the Skate Park which will connect it to Evitts Run.
- All of our Poll workers have completed their mandatory training for the upcoming elections.
- Staff met with Greenway Engineering last week to discuss the scope of work for the upcoming stormwater assessment. Greenway has identified 11 separate drainage areas that will be studied. Greenway will need accessibility to private property for this survey work and is working with our staff on notification protocol per State Code 29-2-9 which allows engineers and surveyors on site for this type of work. Staff are deciding the best method or methods to inform property owners using mailers, door knockers, postcards and the City web site along with social media**. WEST VIRGINIA RIGHT OF ENTRY W. Va. Code, § 29-2-9 §29-2-9. Right of engineers and surveyors to enter on property. The engineers, surveyors and other persons employed by and acting for said survey, and all such persons employed by and acting for the United States geological survey, or other department of the United States government, having for their purposes the obtainment and diffusion of practical information relating to the resources and development of the state, the advancement of science, and the carrying out of the objects of the state geological and economic survey, shall have the right to enter upon all lands, either public or private, and into all mines, for the purpose of exploring, surveying, or doing any other thing which may be necessary to effect such objects, and examine any property, products or developments, relating to the objects of said survey, within the state, without molestation or arrest, and without being liable to the owners thereof, except for actual damages done to the property.**
- Aside from the 11 streets that are scheduled to be milled and paved you will notice a lot of patch work taking place around the city. Jim Wysong has identified many of these trouble spots, but we encourage anyone who sees an issue to please reach out to us.

- Everyone should have a draft of the FY26 – FY30 CIP. Please read over the document and send along any questions you may have.
- I will be drafting a transition plan for my departure so the Mayor and Council will have the information they need as we move into the interim period between my departure and the arrival of the new City Manager. One particular action related to this that will be placed on the next Council agenda under new business is the interim CTUB Board Chair assignment.
- Augustine Avenue Phase I – Construction update.

City Council
101 East Washington Street
Charles Town, WV 25414

Meeting: 05/05/25
Department: City Council
Category: Revision
Initiator:

SCHEDULED

AGENDA ITEM (ID #)

2025-366: Sidewalk Improvement Program (SIP) - Walkability Component

Sidewalk Improvement Program (SIP) - Walkability component added (redline) to the current program text.

Proposed Motion:
Approve the revised Sidewalk Improvement Program.

ATTACHMENTS:
- SIP.pdf

CITY OF CHARLES TOWN
SIDEWALK IMPROVEMENT PROGRAM







City of Charles Town
101 East Washington Street
Charles Town, WV 25414

Phone: 304-724-3248
Website: www.charlestownwv.us

Investing in the Future of Charles Town

Charles Town's Sidewalk Improvement Program was designed as an effort to improve and enhance the overall pedestrian experience in Charles Town. The program is intended to assist applicants in improving the quality of the sidewalks along their property. Improved sidewalks provide safe, accessible streets for all residents, and promote walkability. These benefits contribute to the goals within the comprehensive plan to improve pedestrian experience and quality of life.

Approved applicants in this program are eligible to receive financial assistance of **50/50 matching funds** for sidewalk repairs or installation, of up to $5,000.00. The program is managed by the City Staff. The program components may be amended periodically to accommodate new or modified City policies and procedures.

Policy for Two Bids:

1. **Two Bids** will be required for any application submission.
2. If the work is to be completed by the property owner, verification of expenses by a bid or a website such as homewyse.com will be required.

Policy for Sidewalk Improvement Program Expiration Date:

1. After an award of a Sidewalk Improvement Program Grant, the awardee will have one year from the time of the award to complete the improvements.

PROGRAM ELIGIBILITY

All sidewalks in the City of Charles Town are eligible in the program. Highest priority to properties with gaps. Sidewalks that are in poorest condition will be given higher priority. Existing buildings without sidewalks are also eligible. The following matrix which is from the Charles Town Walkability and Connectivity Study will be used to identify sidewalks that need the most improvement.

For an application in which the sidewalks are not identified in the Walkability and Connectivity study, the evaluation of the application will be by the same standards by which the Walkability and Connectivity study was created.

Priority	Wide Assessment	Condition Assessment
1	Poor	Poor
2	Fair	Poor
3	Poor	Fair
4	Good	Poor
5	Poor	Good
6	Fair	Fair
7	Good	Fair
8	Fair	Good
9	Good	Good

CITY OF CHARLES TOWN
SIDEWALK IMPROVEMENT PROGRAM

ELIGIBLE PROJECTS

The only permissible material approved for the Sidewalk Improvement Program is concrete or brick. Brick is only permitted where there are existing brick sidewalks. Existing buildings with no sidewalk are eligible for the grant as well.

INELIGIBLE PROJECTS

New construction projects, government properties, and national franchise properties are not eligible to participate in the Sidewalk Improvement Program. Private walks extending from the street curb to the main sidewalk and private service walks extending from the main sidewalks to the home or business are the sole responsibility of the owner.

Ineligible projects may be considered for approval at the discretion of City Council at their first meeting in June, provided no eligible project applications have been received by close of business on the first working day of June.

SIDEWALK WIDTH

All sidewalks shall be a minimum of 5 feet wide, unless constraints on the property do not permit this width. Most sidewalks in the City are not 5 feet wide. This program will require those sidewalks to be widened. It is known that there are a few limited locations in the City, that this cannot be achieved. City staff will examine each request and make a determination regarding the ability to install the 5-foot-wide sidewalk.

SURVEY

Where sidewalks do not exist, a survey will be required to ensure that sidewalks are located along the edge of the right-of-way. Survey will be an eligible reimbursement.

APPLICATION PROCESS

Each applicant will be eligible to apply up to $5,000.00 each fiscal year. The applicant shall complete and submit the Sidewalk Improvement Program Application to include the following:

- Proposal, estimates, sketches/photographs, and a written, detailed description of the project to be considered for the matching grant;
- Applicants are expected to complete the 50% matching portion of the estimated project cost and submit proposed/estimated cost in the application. A **minimum of two bids** must be provided; and
- Grant Approval Agreement will be signed by the property owner.

CONDITIONS OF APPROVAL

In addition to previously listed requirements:

- all properties must be current to date on all municipal taxes;
- each property will be eligible for one application per twelve (12) month period
- grants may be limited based on availability; and
- Applicant are encouraged to have read the Charles Town Walkability and Connectivity Study.

APPROVAL PROCEDURES

Each application will be reviewed, and the property will be deemed eligible or ineligible for grant funding by staff. If deemed eligible, staff will make a decision based on compliance of the project with the Charles Town Walkability and Connectivity Study and the Ordinances of the City of Charles Town. If the application is denied, the applicant will receive notification and an explanation of the denial. The City may also provide recommendations for modifications that could be made for the project to receive consideration for approval at a future funding cycle.

APPROVED PROJECT

The City will contact the applicant and the following shall occur:

- applicant may begin his/her matching portion of the project.
- apply for and obtain all necessary permits.
- submit receipts/invoices to the City once the project is complete for reimbursement.

Construction may begin only after the application has been approved and an agreement has been signed. **Any work completed prior to formal written approval will not be eligible for the match funding.**

PROJECT MANAGEMENT

All applicants accepted into the Sidewalk Improvement Program will be fully responsible for managing construction of projects, including, but not limited to, obtaining bids, selecting contractors, obtaining approvals, permits, and insurance, overseeing construction work, and paying all invoices for work, materials, and supplies. Any contractor or subcontractor must have a valid business license issued by the City of Charles Town. The applicant is responsible for ensuring that all contractors and subcontractors meet these requirements.

The City of Charles Town encourages employment and business opportunities for local residents and businesses. Applicants should seek to solicit bids and proposals, materials, and labor from qualified local residents and businesses whenever possible.

CITY INSPECTION PROCESS

1. Installation of forms
2. Post pour Inspection
3. Back fill

NON-DISCRIMINATION - EQUAL EMPLOYMENT OPPORTUNTY

Applicants shall follow the City's non-discrimination ordinance and equal employment opportunity requirements in the solicitation of contractors, subcontractors, workers, and suppliers.

CITY ACCOUNTABILITY

The City's participation in this program does not make the city liable regarding the quality and/or soundness of construction or other repairs, additions, or removals. Any contractor or subcontractor working on the project must be licensed and insured.

PAYMENT OF MATCHING FUNDS

Upon completion of the project, the Applicant will provide accounting of all project costs and a copy of all paid invoices. Projects must be completed within twelve (12) months after formal approval has been granted. Any time extension must be filed and approved by staff.

Reimbursement will be issued after the property owner's portion of the project has been completed, including site inspections and the City has received receipts detailing the completed work. If the project meets all standards, the City will provide funding for no more than the amount awarded in the grant application.

APPLYING AS A TENANT

Tenants applying for the Sidewalk Improvement Program shall have the property owner's permission to make any improvements detailed in this application. The property owner of record signature shall be required on all applications and no application will be accepted if the property owner signature is not present.

ADDITIONAL INFORMATION

The City recommends that any applicant(s) interested in applying for acceptance into the Sidewalk Improvement Program contact City staff prior to submitting an application. Questions about the program may be directed to the City Planner. Applications may be obtained at City Hall and at www.charlestownwv.us.

CITY OF CHARLES TOWN
SIDEWALK IMPROVEMENT PROGRAM

APPLICATION

No application fee applies

1. Applicant's Name: _____ Date: ____/____/____
Day Month Year

2. Mailing Address: _____

3. Project Address: (if different from mailing) _____

4. E-mail: _____ 5. Phone: _____

6. Contractor Address: _____, _____, _____

7. Company Name: _____ 8. Phone: _____

9. Sidewalk details
☐Front yard ☐Side-yard ☐ADA ramps

Projects that answer yes to any of the following questions are not eligible for the program:

10. Has the property in this application been awarded a Sidewalk Improvement Program grant in the past 12 months?

☐ Yes ☐ No

11. Is this property:

New construction? ☐ Yes ☐ No

Government-owned property? ☐ Yes ☐ No

A national franchise? ☐ Yes ☐ No

12. Description of the Sidewalk Improvement project:

13. Estimated Project Start Date: _____/_____/_____ (Day / Month / Year)
14. Estimated Project Completion Date: _____/_____/_____ (Day / Month / Year)

15. Estimated Total Project Budget: _____

16. Grant Amount Requested: _____

17. The following items are included with this application:

- ❑ Existing condition photographs
- ❑ Detailed proposal and/or contractor estimates
- ❑ Charles Town Walkability and Connectivity study

18. I have reviewed the following documents:

- ❑ Codified Ordinances of the City of Charles Town
- ❑ Construction Details for Sidewalks

Upon approval of the application the following will be required by the applicant:

- obtain all necessary building permits
- pass City inspection of improvements to ensure compliance with the sidewalk construction details and intended outcomes based on the funding application submittal
- submit receipts/invoices to the City upon completion of the project

I agree that the information provided above and within is accurate and correct to the best of my knowledge. I also assure that the property listed is in compliance with all laws, ordinances, rules, and regulations of the State of West Virginia and the City of Charles Town.

Applicant's Printed Name: _____

Signature of Applicant: _____

Signature of Property Owner(s) (if different than applicant): _____

Date of Application: _____/_____/_____ (Day / Month / Year)

FOR CITY USE ONLY

Application Number:_____ Date Application Received:_____

Approved:_____ Date:_____

Comments:_____

_____

Grant Approval Agreement

1. **I agree to follow the plan submitted with the application and I understand that failure to do so may disqualify the project for grant funding.**

2. **I agree to complete all improvements within one year of approval from the approval of the grant. Any time extension must be filed and approved by Staff.**

3. **I agree to all of the attached "Conditions of Approval", if any.**

4. **I understand that I have to provide receipts related to the project. If a contractor was used, a written invoice must be provided to the City before funds will be granted. For projects that involve a contractor, receipts and invoices must be accompanied by proof of payment (i.e. cancelled checks). If a contractor was not used, receipts must be provided to the City Staff before a reimbursement will be issued. Only materials may be reimbursed for projects that do not use a contractor. Receipts and invoices must be accompanied by proof of payment.**

5. **I understand that grant monies shall not be distributed until all proposed work is completed and has passed inspected.**

Property Owners Signature _____ **Date** _____

SIDEWALK
IMPROVEMENT
STANDARD DETAILS

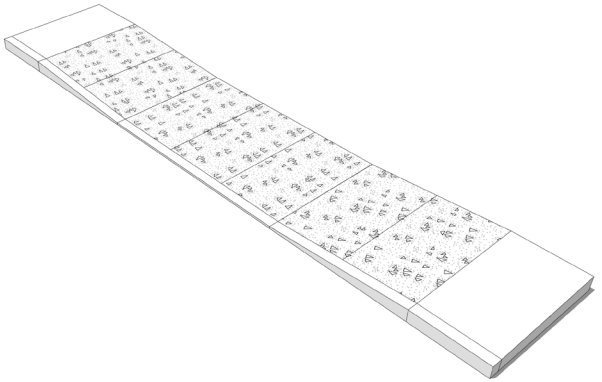

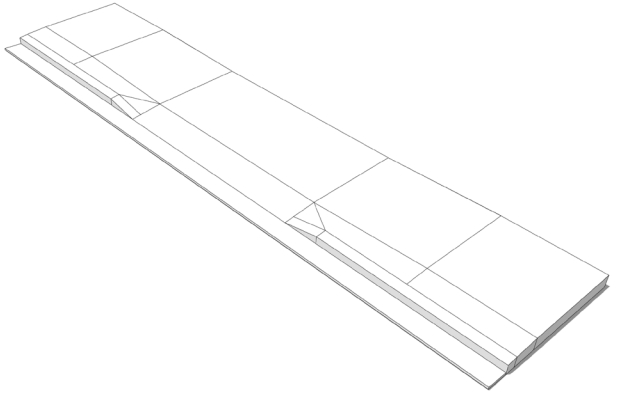

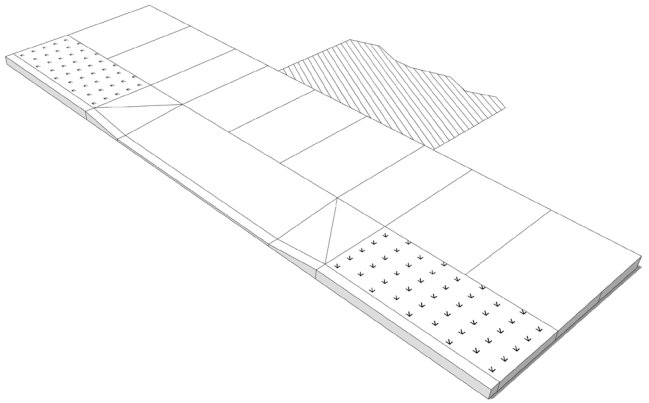

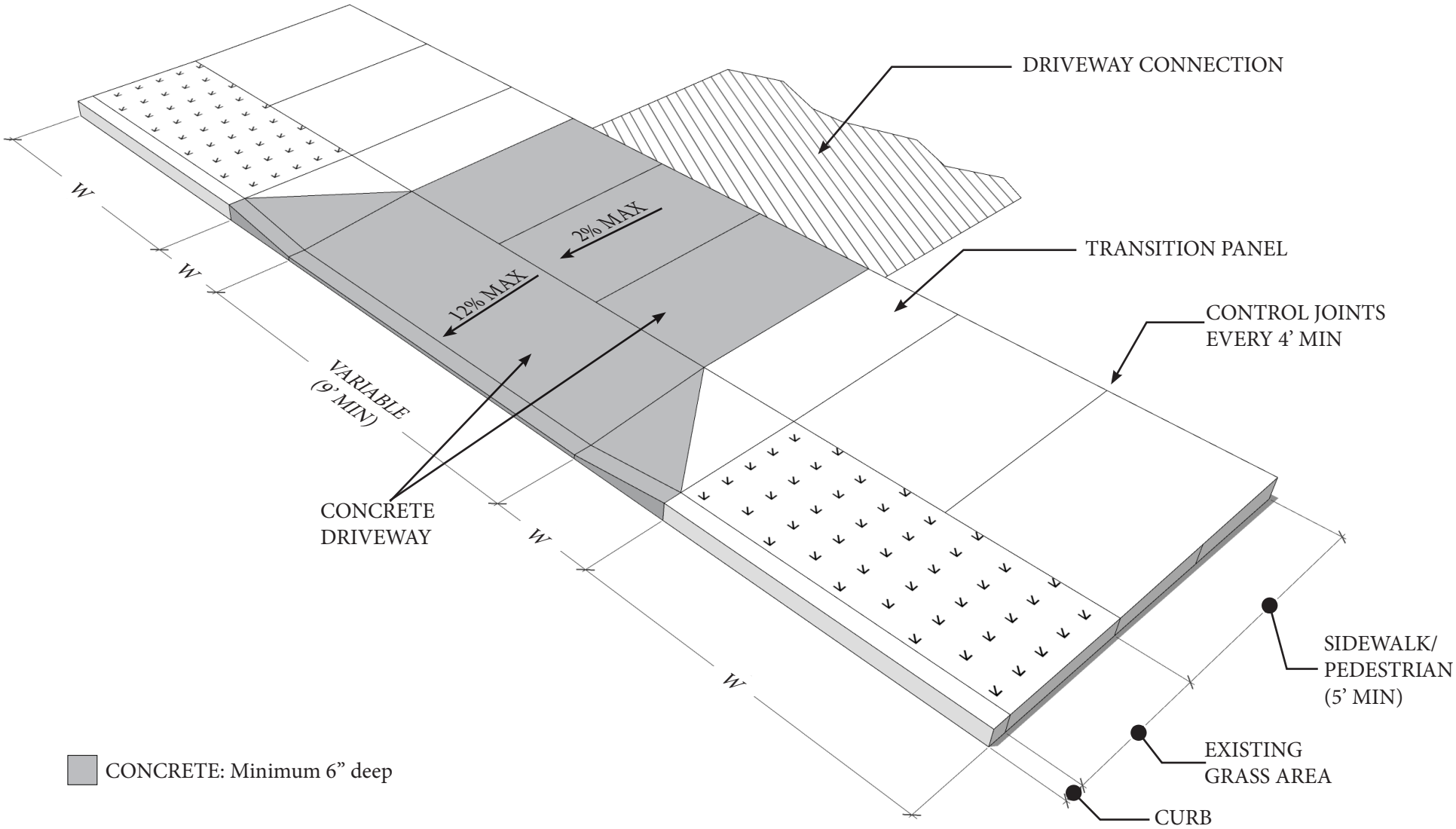

NOTE:

1. Sidewalk and driveways shall have 6 x 6 steel mesh or rebar spaced 6 inches apart.
2. Concrete shall be used for sidewalks and drive approaches and have a compressive strength of not less than 3,5000 P.S.I
3. All edges and joints of the sidewalk and drive shall be rounded. The Surface shall be brushed to create a slightly rough texture

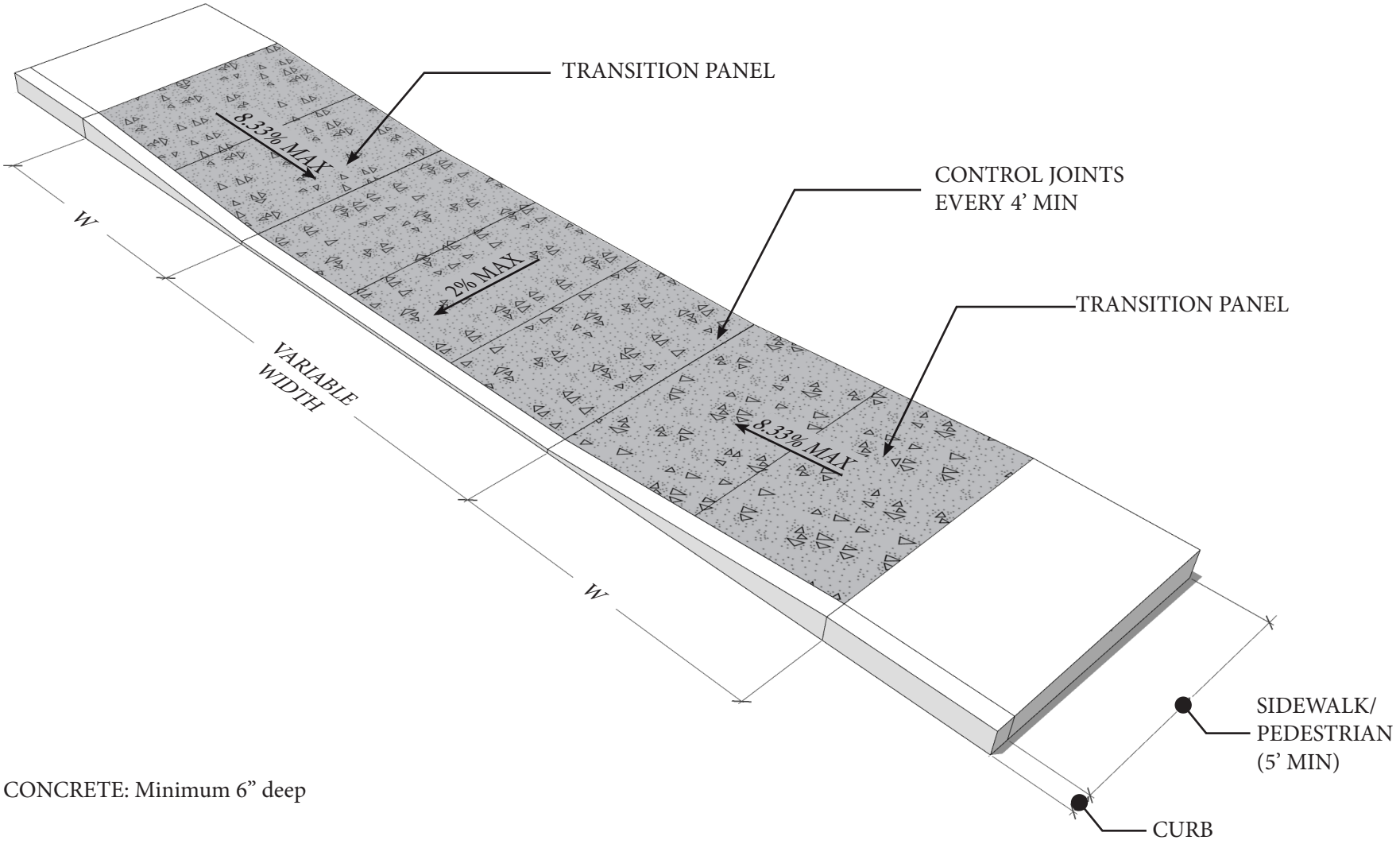

NOTE:

1. Sidewalk and driveways shall have 6 x 6 steel mesh or rebar spaced 6 inches apart.
2. Concrete shall be used for sidewalks and drive approaches and have a compressive strength of not less than 3,5000 P.S.I
3. All edges and joints of the sidewalk and drive shall be rounded. The Surface shall be brushed to create a slightly rough texture

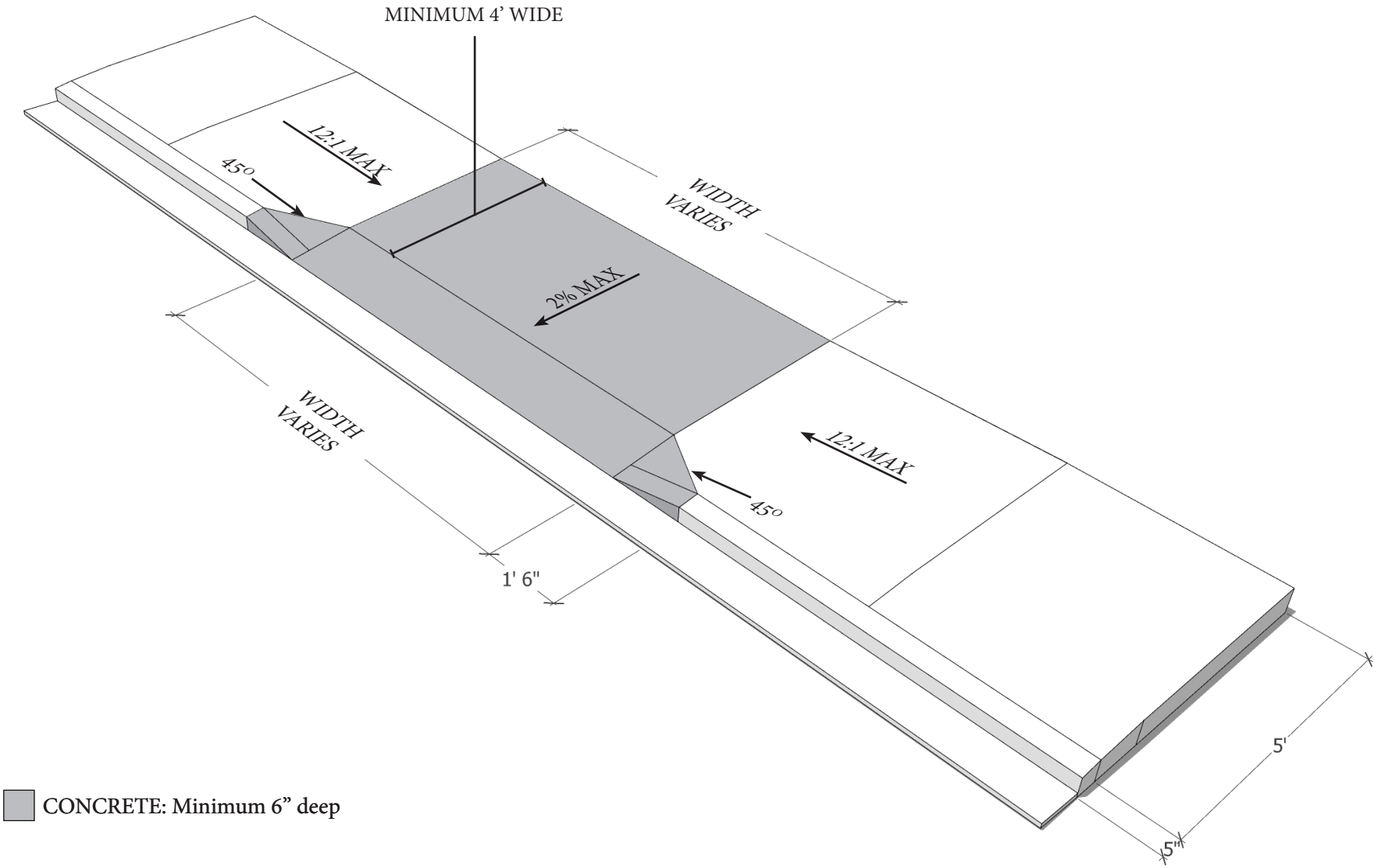

CONCRETE: Minimum 6" deep

NOTE:

1. Sidewalk and driveways shall have 6 x 6 steel mesh or rebar spaced 6 inches apart.
2. Concrete shall be used for sidewalks and drive approaches and have a compressive strength of not less than 3,5000 P.S.I
3. All edges and joints of the sidewalk and drive shall be rounded. The Surface shall be brushed to create a slightly rough texture

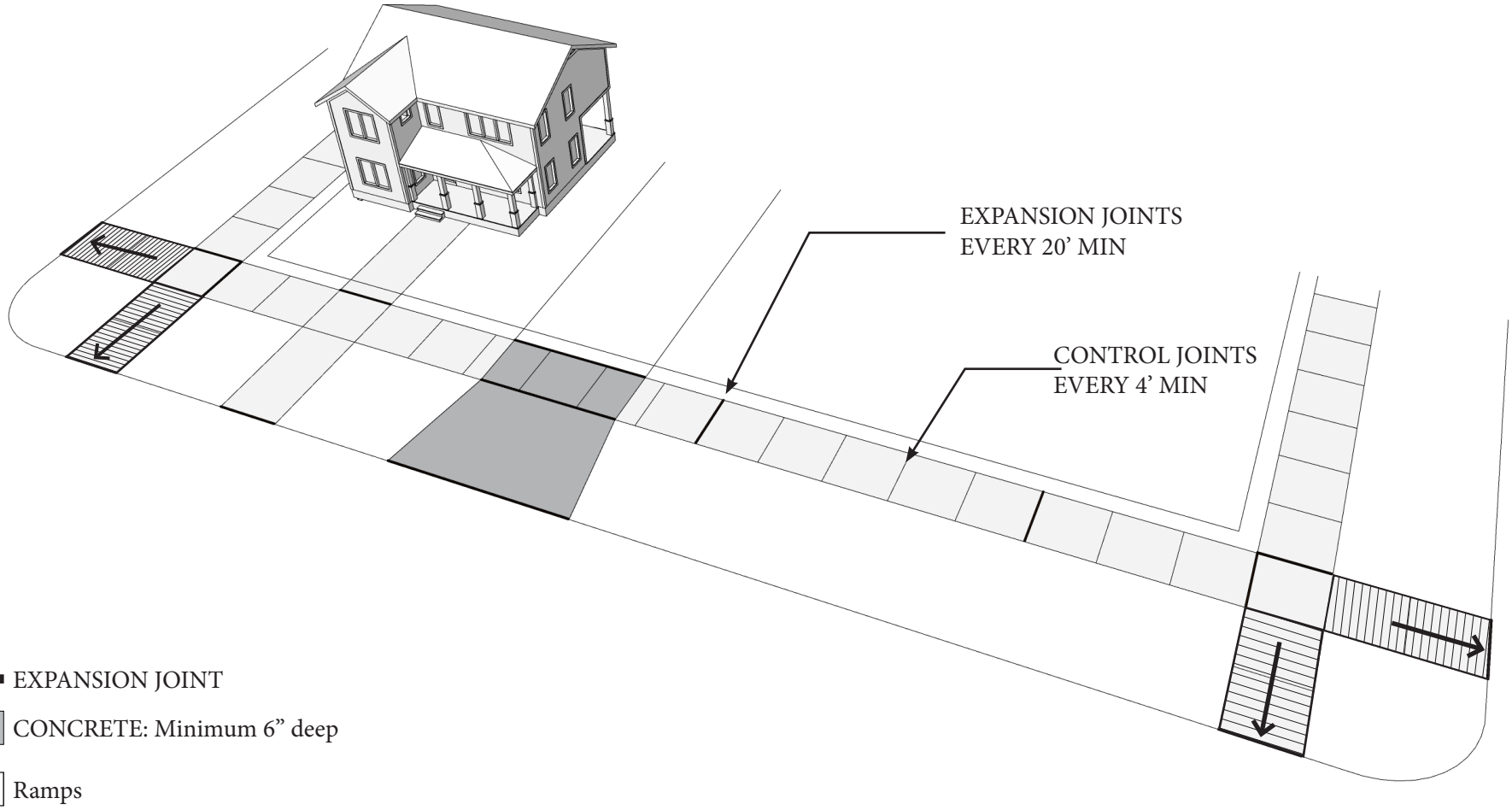

EXPANSION JOINT

CONCRETE: Minimum 6" deep

Ramps

NOTE:

1. Other than areas marked dark grey, all location areas are to be 4" thickness of concrete.
2. Slope on ramps to street a maximum of 8.3%.
3. Truncated domes required at the end of ramps by street

2025-504: Charles Town Parks and Recreation Commission Discussion

This agenda item was Tabled at the April 7, 2025, meeting.

ATTACHMENTS:

City Council
101 East Washington Street
Charles Town, WV 25414

Meeting: 05/05/25
Department: City Council
Category: Report
Initiator:

SCHEDULED

AGENDA ITEM (ID #)

2025-506: Select Committee Letter for the Hill Farm Property, LLC Annexation

Proposed Motion: Approve the Council Select Committee on the Hill Farm Property, LLC Annexation.

ATTACHMENTS:

- Select Committee for the Hill Farm Property Annexation.pdf

City of Charles Town

101 East Washington Street, P.O. Box 14, Charles Town, WV 25414
Phone: (304) 725-2311 ♦ Web: www.charlestownwv.us

May 5, 2025

MAYOR
Robert M. Trainor

CITY COUNCIL

James Kratovil

Elizabeth Ricketts

Jeff Hynes

Kevin Tester

Julie Philabaum

Micheal George

Andie Sugrue

CITY MANAGER

John Nissel

Re: Council Select Committee on the Hill Farm Property, LLC Annexation

Dear Council members,

Please be advised that a Council Select Committee has been commissioned to perform the following:

1. Provide support to City staff with negotiations between the City and the principals of the Agreement.
2. Provide recommendations to City staff regarding possible revisions to the Agreement.
3. Assist in establishing the terms of negotiation to include in the Conditions of Annexation between the City and the LLC entity.

The following personnnel are hereby appointed to the Select Committee:

- Mr. Jeff Hynes, Ward 2 representative and Planning Commission Council representative
- Mr. James Kratovil, Ward 1 representative
- Mr. John Nissel, City Manager
- Ms. Alissa Meeks, Assistant City Manager/Director of Community Development
- Mr. James Newman, City Planner

All Committee meetings will conform with applicable City ordinances, rules and regulations.

John Nissel
City Manager

City Council
101 East Washington Street
Charles Town, WV 25414

Meeting: 05/05/25
Department: City Council
Category: Report
Initiator:

SCHEDULED

AGENDA ITEM (ID #)

2025-522: B&O Status - APUS - Possible Executive Session

ATTACHMENTS:

City Council
101 East Washington Street
Charles Town, WV 25414

Meeting: 05/05/25
Department: City Council
Category: Report
Initiator:

SCHEDULED

AGENDA ITEM (ID #)

2025-507: Memorandum of Understanding (MOU) with The Martinsburg Initiative - Police Social Worker Program

Proposed Motion: Approve the Memorandum of Understanding with the Martinsburg Initiative, Inc.

ATTACHMENTS:

- Agreement Martinsburg Initative_2025_Draft.pdf

AGREEMENT
POLICE SOCIAL WORK PROGRAM

This AGREEMENT is made this the ____day of _____, 2025, by THE MARTINSBURG INITIATIVE, INC. (TMI) and the CITY OF CHARLES TOWN (City) as follows:

WITNESSETH:

WHEREAS THE MARTINSBURG INITIATIVE, INC. (TMI) agrees to provide the CHARLES TOWN POLICE DEPARTMENT (CTPD) with a POLICE SOCIAL WORK PROGRAM (The Program) that will operate within the CTPD.

WHEREAS TMI and the City desire to set forth in the POLICE SOCIAL WORK PROGRAM AGREEMENT the specific terms and conditions of the services to be performed and provided by the POLICE SOCIAL WORKER (PSW) in the CTPD.

NOW, THEREFORE, THE PARTIES HERETO AGREE TO THE FOLLOWING:

1.0 Goals and Objectives. It is understood and agreed that TMI and the CITY officials share the following goals and objectives with regard to the Police Social Work Program in the CTPD:

1.1 The goal of the program is to provide an alternative police response to citizens with social service needs within the City.

1.2 PSW's are not sworn police officers and will not be required to handle any situation that calls for law enforcement action to be taken. PSW's are considered second responders, not first responders.

1.3 By sharing workspace with the PSW and CTPD, partnerships will be created between CTPD and the social service agencies in the region.

1.4 PSW will provide assistance with police responses to citizens with mental health and behavioral health conditions, housing, substance abuse/use, and/or other trauma-related/social service needs.

1.5 The program aims to bridge gaps between law enforcement response and the social needs of the citizens of Charles Town, so they are more likely to get the help and support they need, and less likely to be in repeated contact with law enforcement or incarceration.

1.6 The program will focus on the people most in need and will provide them with the resources that will help improve their quality of life.

2.0 Strategies to achieve these objectives by the PSW's.

2.1 Provide outreach, engagement, crisis intervention, and liaison support to those that are seen on a reoccurring basis, high utilizers.

2.2 Provide training to law enforcement officers on social service resources, trauma informed responses, other mental health topics, and any other related requested training.

2.3 Develop a procedure for identifying and screening people with social service needs and providing interventions.

2.4 Develop a network of working relationships with Jefferson County Day Report Center, WVU-East Jefferson Medical Center, Jefferson County DHHR, Recovery Resource Center, and other social services providers.

2.5 Follow-up with identified individuals in an effort to bridge gaps between police contacts and social services.

2.6 Maintain data on how the PSW is affecting those with social services needs in the City.

2.7 Coordinate public education events in the community.

2.8 Address psycho-social concerns of the community and connect to proper community resources.

3.0 Points of Contact. The PSW shall be employed by TMI and work primarily with the CTPD. The Chief of the Charles Town Police Department (Chief) or designee will be the primary contact for the PSW at CTPD.

4.0 Duty Hours. The maximum number of hours that a PSW shall be on duty in a work week shall be 40 hours. Specific PSW duty hours will generally be 9:00 a.m. to 5:00 p.m. These hours may vary by mutual agreement between the TMI director, and the Chief.

5.0 Dress Code. The PSW will be required to wear business attire while conducting official duties.

6.0 Supplies and Equipment. The CTPD agrees to commit the following resources to the program:

6.1 Allow access to the CTPD. The PSW will be provided with a workstation and have access to office supplies, copiers/scanner/fax, phone, computer/network connection, and any other equipment or resources as deemed appropriate by CTPD to support the objectives of the program.

6.2 CTPD will provide the PSW with an Identification Card that will be worn during normal duty hours.

7.0 Transportation. The PSW may not drive any of the CTPD department vehicles; however, the Chief or designee may allow the PSW as an authorized passenger for official business.

8.0 Access to Records. CTPD will allow the PSW access to those records that are necessary as part of their job function and for which they have authorized access. All records are deemed confidential and will not be shared outside of CTPD without authorization from the Chief or designee.

8.1 CTPD will consult with the Jefferson County Emergency Communications Center and our third-party IT vendor to grant access to its Computer Aided Dispatched (CAD) records for review by the PSW.

8.2 CTPD will allow access to crime analysis data and other identified data as needed for evaluation of crime trends and association with high utilizers of emergency services.

8.3 Provide the PSW with any necessary training to include CAD, CJIS Security training, etc.

8.4 TMI and the PSW agree to grant access to their records upon request.

9.0 Supervision. The PSW is an employee of TMI. In the performance of his/her duties the PSW will coordinate with the Chief or designee for day-to-day operational concerns, questions or duty responsibilities and will remain formally under the supervision of TMI Director. Anything of exceptional concern may be brought directly to the Chief or designee and/or the TMI's Director.

9.1 TMI Director, will communicate regularly to review operations and discuss any project-needed adjustments. PSW shall be responsible for complying with TMI's policies and procedures; however, PSW will be familiar with the standard operating procedures of CTPD.

9.2 Neither the PSW nor CTPD personnel are the agents of the other agency, nor shall they act as the agent of the other.

10.0 Roles and Responsibilities of the Police Social Worker (PSW). PSW will be making contact with people in need of social services both in the field and at the police department. PSW will conduct outreach as deemed necessary and interact with people with varying degrees of mental health issues, addition issues, housing needs, and other service needs.

10.1 At times, PSW will come in contact with people who have committed crimes. The decision on whether to arrest a person or get them into a social service facility/program will be made after discussion with the CTPD police officer. CTPD shall make the final decision on whether to arrest or not.

10.2 PSW is not expected to conduct criminal investigations and is not acting as an agent of CTPD during outreach in the community. However, if subpoenaed as a result of their coordinated efforts with CTPD, the PSW will be expected to testify and provide any necessary records pertaining to the prosecution of an offender.

10.3 PSWs are a support system that serve persons having exigent or emergency needs that require outside agency referrals including but not limited to sexual assaults, domestic violence and/or transport for FPO application, child abuse/neglect, elder abuse/neglect, overdoses, crimes involving children or police action in presence of children, violent crimes where the victim requires medical or emotional assistance, individuals needing referral for psychiatric assistance or evaluation/mental hygiene commit, suicide, individuals needing referral for alcohol or drug addition, runaway/missing juvenile, victim request services, death situations where surviving family members may require emotional assistance, homeless/indigent persons, families requiring intervention and assistance, assistance with protective orders, an alternative to or diversion from criminal justice system, advocacy needs of victims/witnesses of crime, and police-community liaison.

11.0 Referral Procedure. Residents of the City who have legitimate needs for social service intervention may be referred to the PSW by:

11.1 CTPD Incident Reports/Officer call responses – PSW will review calls for service from prior shifts and will determine who qualifies for social service intervention. If the call response is social service related, the PSW will conduct a follow-up response to include home visits, phone calls, email, etc.

11.2 Police Officer Request – Officers shall initiate formal requests for social service intervention by forwarding CTPD Incident Reports and other information onto the PSW.

11.3 Walk-in referrals – PSW will accept walk-in cases and referrals from CTPD officers who are familiar with recurring, problematic individuals and families in the community.

11.5 Outside social service agencies who are dealing with City residents with law enforcement or criminal justice involvement.

11.6 Community Partner Referrals (e.g. Jefferson County Courts, City of Charles Town Municipal Court, etc.)

11.7 Any victim or witness request social services assistance.

11.8 Any family or friend of a person receiving social service intervention.

12.0 Terms of Agreement. The initial term of this agreement will be the fiscal year beginning from July 1st to June 30th, 2026. A new agreement must be executed for each successive fiscal year.

13.0 Consideration. For and in consideration, TMI agrees to pay the $75,000.00 ($65,000.00 salary and fringe and $10,000.00 training and equipment) to cover the cost of employment of the PSW through various grant funding opportunities.

13.1 To help offset the expense of The Program, the City agrees to pay TMI the sum of approximately ???? per fiscal year, subject to approval of the Charles Town City Council.

14.0 Insurance and Indemnification. TMI agrees to purchase and maintain in full force and effect during the term of this agreement a general comprehensive liability insurance policy with coverage in an amount of not less than one million dollars ($1,000,000.00) for any acts or omissions that occur or claims that are made during the term of the agreement.

14.1 Each party shall indemnify, defend, protect, hold harmless, and release the other, its officers, agents, and employees, from and against any and all claims, loss, proceedings, damages, causes of action, liability, costs, or expense (including attorneys' fees and witness costs) arising from or in connection with, or caused by any act, omission, or negligence of such indemnifying party or its agents, employees, contractors, subcontractors, or invitees. This indemnification obligation does not extend to any type of damages or compensation payable to the PSW under any workers' compensation acts, disability benefits, or other employee benefits. ~~The City agrees to hold TMI, its agents and employees free, harmless and indemnified from and against any and all claims, suits or causes of actions arising from or in any way out of the performance of the duties of the PSW or The Program.~~

15.0 Evaluation. It is mutually agreed that TMI shall evaluate annually The Program and the performance of the PSW of forms developed jointly by the parties.

16.0 Notices. Any and all notices or any other communication herein required or permitted shall be deemed to have been given when deposited in the United States Postal Service as regular mail, postage prepaid and addressed as follows:

Margaret Kursey, Director of Administration .

515 West Martin Street
Martinsburg, WV 25401

Christopher A. Kutcher, Chief of Police
Charles Town Police Department
661 South George Street, Suite 100
Charles Town, WV 25414

17.0 Good Faith. TMI~~.~~, the City, and their agents and employees agree to cooperate in a good faith in fulfilling the terms of this agreement. Unforeseen difficulties or questions will be resolved by negotiation between the Director of TMI and the Chief or their designees.

18.0 Modification. This document constitutes the full understanding of the parties and no terms, conditions, understanding or agreement purporting to modify or vary the terms of this document shall be binding unless hereinafter made in writing and signed by both parties to be changed.

19.0 Termination of Agreement. This agreement may be terminated by either party upon 45 days written notification that any other party has failed to substantially perform in accordance with the terms and conditions of this agreement. This agreement may be terminated without cause by either party upon 90 days written notification. Termination of this agreement may only be accomplished as provided herein.

IN WITNESS WHEREOF, the parties hereto have caused this Police Social Worker Program Agreement to be executed the day and year first written above.

THE MARTINSBURG INITIATIVE, INC.

_____

Margaret Kursey
Director, The Martinsburg Initiative

CITY OF CHARLES TOWN

_____

Robert M. Trainor
Mayor, City of Charles Town

CHARLES TOWN POLICE DEPARTMENT

DRAFT

_____

Christopher A. Kutcher
Chief, Charles Town Police Department

DRAFT

City Council
101 East Washington Street
Charles Town, WV 25414

Meeting: 05/05/25
Department: City Council
Category: Report
Initiator:

SCHEDULED

AGENDA ITEM (ID #)

2025-508: Memorandum of Understanding (MOU) with Charles Town Now - Possible Executive Session

ATTACHMENTS:

City Council
101 East Washington Street
Charles Town, WV 25414

Meeting: 05/05/25
Department: City Council
Category: Report
Initiator:

SCHEDULED

AGENDA ITEM (ID #)

2025-512: *BR2025-03*: Norborne Glebe Phase 11 - Bond Initiation

Proposed Motion: Approve the performance bond in the amount of $1,886,150.95 for the Norborne Glebe housing development Phase 11.

ATTACHMENTS:

- 1. Staff Report.pdf
- 2. Application.pdf
- 3. Bond estimate.xlsx
- 4. KH Review.pdf

Bond Initiation Request
BR2025-03

Date: For the May 5, 2025 City Council meeting
Applicant: Arcadia Land Inc.
Report by: James Newman, City Planner, Zoning/Subdivision Administrator.
Proposal: A bond initiation in the amount of $1,886,150.95

Norborne Glebe Phase 11

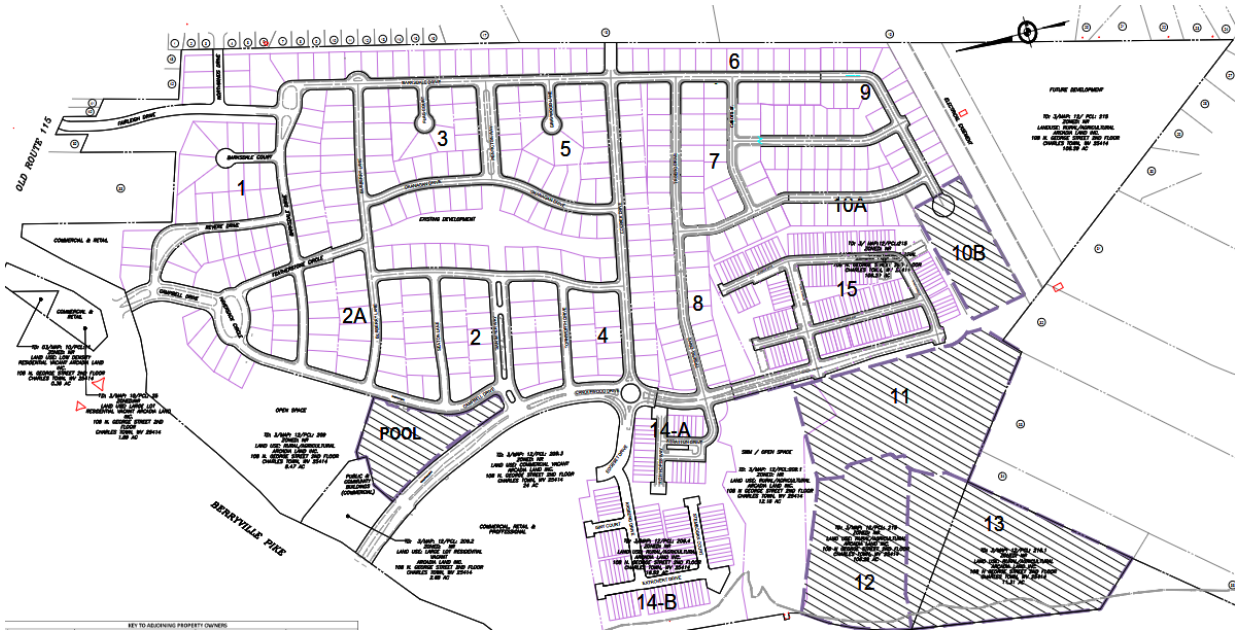

BACKGROUND

The applicant, Arcadia Land Inc., has submitted a bond initiation request for the Norborne Glebe housing development Phase 11. The applicant is requesting a bond initiation in the amount of $1,886,150.95. This amount will cover performance bond issues (road paving, street lights, etc.).

A land disturbance bond was previously approved by Council on April 16, 2024 in the amount of $1,635,228.03 to cover phases 10B, 11, 12, and 13.

Bonds shall be required for public and other physical Improvements to be constructed under an approved Final S/LD Application. Such Improvements shall include, without limitation, Road, curb, gutter, sidewalk, trails, storm Drainage, traffic signalization and control, water and sanitary sewer infrastructure, and any other site-related Improvements required by the City of Charles Town for vehicular and pedestrian ingress and egress, for public access roadways, for Structures necessary to insure stability of critical slopes, for necessary utilities, and for Stormwater Management Facilities.

BOND COMMITTEE

At their April1 4, 2025 meeting, the City's Bond Committee discussed the application and recommend approval of the proposed initiation.

PLANNING COMMISSION

The Planning Commission considered this item at their April 28, 2025 meeting. Following discussion the Commission unanimously voted to recommend approval of the request.

RECOMMENDATION

Approval.

Norborne Glebe - Phase 11
Performance Bond

BOND REQUEST AND REDUCTION

1. APPLICATION TYPE :

☑ Bond Initiation – No application fee

☐ Bond Reduction – No application fee

☐ Bond Release – Application Fee: $85

2. FEES

Third-party review fees are assessed separately for each application, and will be sent to the applicant. All fees must be paid prior to approval.

3. PUBLIC NOTICE

Only bond release applications require a public hearing.

4. APPLICATION REQUIREMENTS

Please submit one application set with supporting materials in paper, and one copy in PDF format.

1. DATE January 28, 2025

2. PROJECT NAME Norborne Glebe Subdivision - Phase 11

Address N/A

3. APPLICANT'S NAME* Arcadia Land, Inc. Attn: Gary Endler

Address 108 N. George Street - 2nd Floor Charles Town, WV 25414

Telephone Number (703) 771-8000

Email Address gendler@arcadiacompanies.com

4. PROPERTY OWNER'S NAME Arcadia Land, Inc, Attn: Gary Endler

Address 108 N George Street - 2nd Floor Charles Town, WV 25414

Telephone Number (703) 771-8000

Email Address gendler@arcadiacompanies.com

*Applicants include: Property owner(s), Engineer(s), Surveyor(s), or Consultant(s)

5. DESCRIPTION OF REQUEST:

Requesting Bond Amount Establishment for the Performance Bond for Phase 11, Norborne Glebe Subdivision

6. A) CURRENT BOND AMOUNT $0

B) PROPOSED BOND AMOUNT $1,886,150.95

C) CHANGE IN BONDED AMOUNT $

7. PARCEL INVENTORY: (List all parcels that are part of this application):

Tax Map No.	Parcel No.	Tax Map No.	Parcel No.
3-12	215	3-12	216.1

8. PARCEL HISTORY: (List all pending or previously approved applications on the subject parcels inventoried above, including previous plat applications if this application is an amendment)

Application No.	Project Name and Phase	Status	Approval Date
SLD-2013-04	Norborne Glebe Phase 5	Approved	01/14/2014
SLD-2017-05	Norborne Glebe Phase 7-8	Approved	09/25/2018
SLD-2016-01	Norborne Glebe Phase 6	Approved	09/25/2018
SLD-2017-14	Norborne Glebe Phase 14A	Approved	09/25/2018
SLD-2021-02	Norborne Glebe Phase 14B	Approved	02/28/2022
SLD-2021-05	Norborne Glebe Phase 9&10A	Approved	10/13/2022
SLD-2022-03	Norborne Glebe Phase 15	Approved	03/27/2023
SP-2022-06	Norborne Glebe Pool	Approved	07/28/2023
SLD-2022-06	Norborne Glebe Phase 10B-13	Approved	02/27/2024

9. <u>BOND RELEASE</u> – SUPPLEMENTAL MATERIALS REQUIRED:

A. Copies of inspection and test reports if work was inspected and tested by a third-party inspector.

B. Certification that all bonded Improvements, have been completed in accordance with the approved plans, profiles, and specifications and the requirements of any applicable manual.

C. A copy of the City-approved As-Built Drawings as required for facilities within public rights-of-way or Easements.

D. A letter from a Professional Engineer or Professional Land Surveyor certifying that property corners and Monuments have been set as required under this Ordinance.

Continued on next page.

E. Documentation of acceptance by WVDOH for public roadways and rights-of-way, or a maintenance and indemnification agreement and bond approved by the Planning Commission for public roadways that have been completed in accordance with WVDOH standards but which, due to factors other than their quality of construction, are not eligible for acceptance by WVDOH.

F. **For private roadways**, a letter of acceptance by the entity responsible for maintenance and a Latent Defects Indemnification Agreement and Bond.

   Before a Performance Agreement and surety for private roadway construction shall be released, a Latent Defects Indemnification Agreement and Bond shall be provided by the applicant/Developer and approved by the Planning Commission. The guarantee provided by such Agreement and Bond must be for a period of two (2) years following the date of performance bond release, and must be in an amount equal to no less than 5% of the original performance bond estimate.

G. **Landscaping Surety** is required to ensure the landscaping shown on a Major S/LD plan is maintained for one (1) year. The one (1) year shall start from the date at which the surety for the site has been released, with the exception of this landscaping surety. The landscaping surety amount shall not be less than $5,000.00 or 10% of the total landscaping cost for the project, which ever is greater.

APPLICANT CERTIFICATION

I certify that, to the best of my knowledge, the submitted information and statements are true and correct. I also certify that I have received and read Article 1335 of the S/LD Ordinance.

Signature of Applicant _____ Date 2/7/2025

Asst. Treasurer

Signature of Property Owner (If different than Applicant)

_____ Date _____

Please submit an original completed application to the following:

At City Hall:	Or	Via Mail:
Subdivision Administrator City of Charles Town 101 E. Washington Street Charles Town, WV 25414		Subdivision Administrator City of Charles Town PO BOX 14 Charles Town, WV 25414

FOR CITY USE ONLY

Application Number:_____ Date Application Received:_____

Fee: $_____ Check No._____

Receipt No._____

Site Inspection Date:_____ Inspector:_____

Planning Commission Approval:_____ Date:_____

City Council Approval:_____ Date:_____

Comments:_____

_____

_____

_____

_____

BOND ESTIMATE			
ITEM	UNIT	UNIT COST	QUANTITY
Mobilization	LS	$12,440.00	1
Field Office	EA	$3,490.00	
Job Sign	EA	$1,340.00	
Steel Pipe Property Corner Marker Incl. Survey	EA	$320.38	155
RM--1		$825.00	
RM--2		$764.00	
Regular Bulk used as Fill	CY	$4.50	
Rock, Rip	CY	$51.50	
Rock, Blast	CY	$55.00	
Buy, Load, Haul 10 Mi. Select Material	CY	$42.00	
Fill and Compaction of On-site Borrow	CY	$44.00	
Load and Haul, 20 mi R/T	CY	$36.56	
Dump Charge	CY	$62.50	
Site Grading	SY	$1.25	
Light	AC	$14,548.50	7.22
Heavy	AC	$26,699.49	
Seeding	SY	$3.00	21150
Sodding	SY	$8.50	21150
18"	EA	$70.00	
24"	EA	$90.00	
6'-8' (1-2 in. Caliper)	EA	$400.00	146
8'-10' (2.5-3 in. Caliper)	EA	$700.00	
Tree Protection	LF	$11.13	
Timber Wall (less than 6 ft)	LF	$325.00	
Dry Rubble RW-1 (H=6')	LF	$450.00	

Mortared Rubble RW-1A (H=6')	LF	$535.00	
Concrete Gravity RW-2 (H=6')	LF	$589.50	
Concrete Gravity RW-3 (H=6')	LF	$1,037.50	
FENCING			
Std. Fence (H=5') FR-5	LF	$56.00	
Farm Fence (H=5') FR-3A	LF	$37.50	
Chain Link Fence (H=6') FR 2-B	LF	$62.00	
Board Fence (H=6')	LF	$62.00	
TOTS LOTS			
Tot Lot	EA	$16,495.00	1
STORM SEWER			
NOTE: All pipe unit prices include trench, excavation, bedding, pipe, & backfill			
Rock Excavation for All Pipe Types			
Less than 1,500 CY (Blasting)	CY	$110.00	
More than 1,500 CY (Blasting)	CY	$90.00	
Less than 1,500 CY (Hoe Ram)	CY	$220.00	
More than 1,500 CY (Hoe Ram)	CY	$180.00	
Trench De-Watering			
Trench De-Watering	LF	$4.00	
12" Pipe (RCP III)			
0'-8' Cut	LF	$100.00	
8'-14' Cut	LF	$140.00	
Add cost for Class IV	LF	$1.90	
O-Ring	LF	$12.36	
15" Pipe (RCP III)			
0'-10' Cut	LF	$100.00	
10'-16'	LF	$156.00	
Add Cost for Class IV	LF	$1.48	
O-Ring	LF	$8.58	
18" Pipe (RCP III)			
0'-10' Cut	LF	$100.00	
10' -16' Cut	LF	$160.00	
Add Cost for Class IV	LF	$3.20	
O-Ring	LF	$11.20	
21" Pipe (RCP III)			
0'-8' Cut	LF	$115.00	
8'-14' Cut	LF	$174.80	
Add cost for Class IV	LF	$4.40	
O-Ring	LF	$20.80	
24" Pipe (RCP III)			
0'- 10' Cut	LF	$140.00	
10'-16'	LF	$196.00	
Add Cost for Class IV	LF	$5.04	

O-Ring	LF	$22.40	
27" Pipe (RCP III)			
0'- 10' Cut	LF	$123.20	
10' -16' Cut	LF	$195.03	
Add Cost for Class IV	LF	$6.40	
O-Ring	LF	$24.00	
30" Pipe (RCP III)			
0'- 8' Cut	LF	$169.40	
8'-14' Cut	LF	$256.66	
Add cost for Class IV	LF	$9.60	
O-Ring	LF	$27.60	
33" Pipe (RCP III)			
0'- 10' Cut	LF	$240.00	
10'-16'	LF	$333.00	
Add Cost for Class IV	LF	$13.50	
O-Ring	LF	$45.80	
36" Pipe (RCP III)			
0'-10' Cut	LF	$249.60	
10' -16' Cut	LF	$363.92	
Add Cost for Class IV	LF	$12.40	
O-Ring	LF	$36.40	
42" Pipe (RCP III)			
0'- 8' Cut	LF	$289.54	
8'-14' Cut	LF	$413.46	
Add cost for Class IV	LF	$19.20	
O-Ring	LF	$56.72	
48" Pipe (RCP III)			
0'-10' Cut	LF	$320.52	
10'-16'	LF	$442.31	
Add Cost for Class IV	LF	$20.00	
O-Ring	LF	$69.36	
54" Pipe (RCP III)			
0' - 10' Cut	LF	$420.00	
10' -16' Cut	LF	$541.38	
Add Cost for Class IV	LF	$30.00	
O-Ring	LF	$70.96	
60" Pipe (RCP III)			
0'-10' Cut	LF	$420.00	
10' -16' Cut	LF	$498.48	
Add Cost for Class IV	LF	$36.00	
O-Ring	LF	$77.84	
23"x14" (18" Equiv- RCP III)			
0'10' Cut	LF	$190.00	
10'-16' Cut	LF	$278.60	
Add cost for Class IV	LF	$41.60	
O-Ring	LF	$109.80	

30"x19" (24" Equiv- RCP III			
0'10' Cut	LF	$190.00	
10'-16' Cut	LF	$329.25	
Add cost for Class IV	LF	$15.07	
O-Ring	LF	$109.79	
38"x24" (30" Equiv- RCP III			
0'10' Cut	LF	$190.00	
10'-16' Cut	LF	$423.78	
Add cost for Class IV	LF	$21.38	
O-Ring	LF	$129.92	
45"x29" (36" Equiv- RCP III)			
0'10' Cut	LF	$370.00	
10'-16' Cut	LF	$526.88	
Add cost for Class IV	LF	$25.45	
O-Ring	LF	$119.63	
1			
0'12' Cut	LF	$370.00	
10'-18' Cut	LF	$528.36	
Add cost for Class IV	LF	$38.87	
O-Ring	LF	$149.26	
60"x38" (48" Equiv- RCP III)			
0'12' Cut	LF	$370.00	
10'-18' Cut	LF	$543.90	
Add cost for Class IV	LF	$46.46	
O-Ring	LF	$177.11	
8" Pipe			
0'-8' Cut	LF	$50.00	
8'-14' Cut	LF	$75.30	
12" Pipe			
0'-8' Cut	LF	$67.50	
8'-14' Cut	LF	$100.04	
15" Pipe			
0'-8' Cut	LF	$87.08	382
8'-16' Cut	LF	$129.65	
18" Pipe			
0'-8' Cut	LF	$114.33	
8'-16' Cut	LF	$170.69	244
24" Pipe			
0'-8' Cut	LF	$132.62	
8'-16' Cut	LF	$197.61	349
30" Pipe			
0'-8' Cut	LF	$157.42	
8'-16' Cut	LF	$236.13	603
36" Pipe			
0'-8' Cut	LF	$200.00	
8'-16' Cut	LF	$298.00	

42" Pipe			
0'-8' Cut	LF	$224.20	
8'-16' Cut	LF	$334.06	
48" Pipe			
0'-8' Cut	LF	$253.35	
8'-16' Cut	LF	$377.49	
END SECTIONS			
End Sections (ES-1), Concrete Pipe Size			
15"	EA	$1,389.00	
18"	EA	$1,583.46	
21"	EA	$1,805.14	
24"	EA	$2,057.86	
27"	EA	$2,345.97	
30"	EA	$2,674.40	
36"	EA	$3,048.82	
42"	EA	$3,558.50	
48"	EA	$4,056.69	
54"	EA	$4,624.63	
60"	EA	$5,272.07	
ENDWALLS			
EW-1 (Pre-Cast) Round Pipe Size			
15"	EA	$2,433.00	
18"	EA	$2,724.96	
24"	EA	$3,051.96	
30"	EA	$3,418.19	
36"	EA	$3,828.37	
EW-1 Cast in Place [Round Pipe Size]			
15"	EA	$2,591.15	
18"	EA	$2,902.08	
24"	EA	$3,250.33	
30"	EA	$3,640.37	
36"	EA	$4,077.22	
EW-1A (Pre-Cast) Elliptical Pipe Size			
23" X 14" (18")	EA	$1,335.00	
30" X 19" (24")	EA	$1,495.20	
38 X 24" (30")	EA	$1,879.50	
45 X 29" (36")	EA	$2,105.04	
53" X 34" (42")	EA	$2,791.50	
EW-1A (Cast in Place)Elliptical Pipe Size			
23" X 14" (18")	EA	$1,318.50	
30" X 19" (24")	EA	$1,318.50	
38 X 24" (30")	EA	$2,257.00	
45 X 29" (36")	EA	$2,257.00	
53" X 34" (42")	EA	$3,217.50	
EW-2 (PreCast) Round Size Pipe Size			
42"	EA	$8,324.00	

48"	EA	$9,322.88	
54"	EA	$10,441.63	
60"	EA	$11,694.62	
72"	EA	$12,675.50	
84"	EA	$14,196.56	
EW-2 (Cast in Place) Round Size Pipe Size			
42"	EA	$9,255.50	
48"	EA	$10,366.16	
54"	EA	$11,610.10	
60"	EA	$13,003.31	
72"	EA	$15,747.00	
84"	EA	$17,636.64	
EW-6PC [Double Pipe] Pipe Size			
2-15"	EA	$2,123.00	
2-18"	EA	$2,377.76	
2-24"	EA	$2,663.09	
2-30"	EA	$4,096.00	
2-36"	EA	$4,587.52	
Standard Brick Manhole Std Frame & Cover (MH-1)			
6' Depth	EA	$6,048.00	
Depth Below 6'	VF	$230.00	
Standard Precast Manhole Std Frame & Cover (MH-2)		$5,337.00	3
Additional Cost (Amount in parentheses to be added to the above unit costs)			
Watertight Fr/Cover (Add 110)	EA	$579.00	
Heavy Duty Fr/ Cover (Add 82)	VF	$599.00	
Cast in Place 48"			
Drop Inlet (DI-1) 12"-24" Pipe0-10 VF	EA	$7,690.00	1
Drop Inlet (DI-1A) 12"-24" Pipe10-20 VF	EA	$7,690.00	
Drop Inlet (DI-2A) 12"-24" Pipe0-10 VF, 10' throat	EA	$9,458.70	
Drop Inlet (DI-2A) 12"-24" Pipe10-20 VF, 10' throat	EA	$11,634.20	
Curb Drop Inlet (DI-3A)			
12"-30" Pipe (Invert Depth (H) =0'-8') Inlet Length 2'-6"	EA	$7,460.00	
Curb Drop Inlet (DI-3AA)			
12"-30" Pipe (Invert Depth (H) =8'-	EA	$9,772.60	
Curb Drop Inlet (DI-3B) 12"-30" Pipe (Invert Depth (H) = 0 '-8') Inlet Length			
4'	EA	$7,758.40	
6'	EA	$8,534.24	1

8'	EA	$9,387.66	3
10'	EA	$10,326.43	
12'	EA	$11,359.07	3
16'	EA	$12,494.98	
20'	EA	$13,744.48	
Curb Drop Inlet (DI-3BB) 12"-30" Pipe (Invert Depth (H) = 0 '-8') Inlet Length			
4'	EA	$7,680.82	
6'	EA	$8,448.90	1
8'	EA	$9,293.79	2
10'	EA	$10,223.17	1
12'	EA	$11,245.48	
16'	EA	$12,370.03	
20'	EA	$13,607.03	
Curb Drop Inlet (DI-3C) 12"-30" Pipe (Invert Depth (H) = 0 '-8') Inlet Length			
6'	EA	$7,204.61	
8'	EA	$7,925.07	
10'	EA	$8,717.57	
12'	EA	$9,589.33	
16'	EA	$10,548.26	
20'	EA	$11,603.09	
Curb Drop Inlet (DI-3CC) 12"-30" Pipe (Invert Depth (H) = 0 '-8') Inlet Length			
6'	EA	$8,573.48	
8'	EA	$9,430.83	
10'	EA	$10,373.91	
12'	EA	$11,411.30	
16'	EA	$12,552.43	
20'	EA	$13,807.68	
Curb Drop Inlet (DI-3D)			
12"-30" Pipe (Invert Depth (H) =0'-8') Inlet Length 2'-6"	EA	$6,430.11	
Curb Drop Inlet (DI-3DD)			
12"-30" Pipe (Invert Depth	EA	$7,587.53	
Curb Drop Inlet (DI-3E) 12"-30" Pipe (Invert Depth (H) = 0 '-8') Inlet Length			
4'	EA	$7,460.00	
8'	EA	$7,982.20	
10'	EA	$8,540.95	
12'	EA	$9,138.82	
16'	EA	$9,778.54	
20'	EA	$10,463.04	
Curb Drop Inlet (DI-3EE) 12"-30" Pipe (Invert Depth (H) = 8'-20') Inlet Length			
6'	EA	$11,509.34	
8'	EA	$12,314.99	
10'	EA	$13,177.04	
12'	EA	$14,099.44	
16'	EA	$15,086.40	
20'	EA	$16,142.44	
Curb Drop Inlet (DI-3F) 12"-30" Pipe (Invert Depth (H) = 0 '-8') Inlet Length			

6'	EA	$6,855.74	
8'	EA	$7,335.64	
10'	EA	$7,849.14	
12'	EA	$8,398.58	
16'	EA	$8,986.48	
20'	EA	$9,615.53	
Curb Drop Inlet (DI-3FF) 12"-30" Pipe (Invert Depth (H) = 8'-20') Inlet Length			
6'	EA	$14,671.28	
8'	EA	$15,698.27	
10'	EA	$16,797.15	
12'	EA	$17,972.95	
16'	EA	$19,231.06	
20'	EA	$20,577.23	
Curb Drop Inlet (DI-4A) 36"-48" Pipe (Invert Depth (H) = 8'-20') Inlet Length			
4'	EA	$10,020.00	
Curb Drop Inlet (DI-4AA) 36"-48" Pipe (Invert Depth (H) = 8'-20') Inlet Length			
4'	EA	$10,020.00	
Curb Drop Inlet (DI-4B) 36"-48" Pipe (Invert Depth (H) = 0'-8') Inlet Length			
6'	EA	$8,802.77	
8'	EA	$9,418.96	
10'	EA	$10,078.29	
12'	EA	$10,783.77	
16'	EA	$11,538.64	
20'	EA	$12,346.34	
Curb Drop Inlet (DI-4BB) 36"-48" Pipe (Invert Depth (H) = 8'-20') Inlet Length			
6'	EA	$17,429.48	
8'	EA	$18,649.55	
10'	EA	$19,955.02	
12'	EA	$21,351.87	
16'	EA	$22,846.50	
20'	EA	$24,445.75	
Curb Drop Inlet (DI-4C) 36"-48" Pipe (Invert Depth (H) = 0'-8') Inlet Length			
8'	EA	$9,418.96	
10'	EA	$10,078.29	
12'	EA	$10,783.77	
16'	EA	$11,538.64	
20'	EA	$12,346.34	
Curb Drop Inlet (DI-4CC) 36"-48" Pipe (Invert Depth (H) = 8'-20') Inlet Length			
8'	EA	$22,417.13	
10'	EA	$23,986.33	
12'	EA	$25,665.38	
16'	EA	$27,461.95	
20'	EA	$29,384.29	
Curb Drop Inlet (DI-4D)			
36"-48" Pipe (Invert Depth (H) =8'16') Inlet Length 4'	EA	$8,279.27	
Curb Drop Inlet (DI-4DD)			

36"-48" Pipe (Invert Depth (H)	EA	$16,392.95	
Curb Drop Inlet (DI-4E) 36"-48" Pipe (Invert Depth (H) = 0'-8') Inlet Length			
6'	EA	$9,016.12	
8'	EA	$9,647.25	
10'	EA	$10,322.56	
12'	EA	$11,045.14	
16'	EA	$11,818.30	
20'	EA	$12,645.58	
Curb Drop Inlet (DI-4EE) 36"-48" Pipe (Invert Depth (H) = 8'-16') Inlet Length			
6'	EA	$15,688.06	
8'	EA	$16,786.22	
10'	EA	$17,961.26	
12'	EA	$19,218.54	
16'	EA	$20,563.84	
20'	EA	$22,003.31	
Curb Drop Inlet (DI-4F) 36"-48" Pipe (Invert Depth (H) = 0'-8') Inlet Length			
8'	EA	$10,040.36	
10'	EA	$10,743.18	
12'	EA	$11,495.20	
16'	EA	$12,299.87	
20'	EA	$13,160.86	
Curb Drop Inlet (DI-4FF) 36"-48" Pipe (Invert Depth (H) = 8'-16') Inlet Length			
8'	EA	$15,140.86	
10'	EA	$16,200.72	
12'	EA	$17,334.77	
16'	EA	$18,548.20	
20'	EA	$19,846.57	
Median Drop Inlets - CIP			
Median Drop Inlets (DI-6A) 12"-24"Pipe Inlet (H=8')	EA	$6,032.00	
Median Drop Inlets (DI-6B) 12"-24"Pipe Inlet (H=8')	EA	$6,080.00	
Median Drop Inlets (DI-6C) 30"-48"Pipe Inlet (H=10')	EA	$7,737.50	
Median Drop Inlets (DI-6D) 30"-48"Pipe Inlet (H=10')	EA	$7,805.00	
Median Drop Inlets (DI-7) Type III Top 12"-42" Pipe Inlet (H=10')	EA	$8,548.00	
Median Drop Inlets (DI-7A) Type III Top 12"-42" Pipe Inlet (H=10')	EA	$8,548.00	
Median Drop Inlets (DI-7B) Type III Top 12"-42" Pipe Inlet (H=10')	EA	$8,548.00	

Median Drop Inlets (DI-5) Type III Top 12"-42" Pipe Inlet (H=8')	EA	$6,569.08	
Standard Yard Inlet (YI-1) 12"-48" Pipe (Invert Depth (H)= 0'-8') Inlet Length 4' (No Aprons)		$5,969.49	
Add Yard Inlet Apron	THROAT	$320.54	
Standard Yard Inlet (YI-1) 12"-48" Pipe (Invert Depth (H)= 0'-8') Inlet Length 4' (No Aprons)	EA	$6,444.64	
Add Yard Inlet Apron	THROAT	$320.54	
Single Box Culvert (BC-1A) Fills to 25'			
4' X 4'	LF	$473.00	
5' X 5'	LF	$563.00	
6' X 6'	LF	$689.00	
8' X 8'	LF	$944.00	
10' X 10'	LF	$1,159.00	
Double Box Culvert (BC-2b) Fills to 25'			
4' X 4'	LF	$792.40	
5' X 5'	LF	$987.00	
6' X 6'	LF	$1,195.60	
8' X 8'	LF	$1,607.20	
10' X 10'	LF	$1,975.40	
Oversized Single Box Culvert (BBC-1) Fills to 25'			
12' X 6'	LF	$1,488.50	
12' X 8'	LF	$1,488.50	
12' X 10'	LF	$1,771.50	
12' X 12'	LF	$1,771.50	
Triple Box Culvert (BC-3B) Fills to 25'			
4' X 4'	LF	$1,129.55	
5' X 5'	LF	$1,399.25	
6' X 6'	LF	$1,755.95	
8' X 8'	LF	$2,367.85	
10' X 10'	LF	$3,607.60	
Quadruple Box Culvert (BC-4B) Fills to 25'			
4' X 4'	LF	$1,431.15	
5' X 5'	LF	$1,776.25	
6' X 6'	LF	$2,208.35	
8' X 8'	LF	$2,170.65	
10' X 10'	LF	$4,110.75	
Standard Wing for Box Culvert (1 Side Only) Height of Box			
4'	EA	$926.50	
5'	EA	$1,390.00	
6'	EA	$1,853.50	

8'	EA	$3,426.50	
10'	EA	$4,558.00	
Standard Wing for Box Culvert (BBC-W) Height of Box			
6'	EA	$1,817.00	
8'	EA	$3,007.50	
10'	EA	$4,497.50	
12'	EA	$6,567.00	
Connection to Existing Structure			
15"-36" Pipe	EA	$1,584.00	
42"-60" Pipe	EA	$1,584.00	
Casing Pipe, Bore and Jack (3/8" wall)			
22" ID (6"-8" Carrier Pipe)	LF	$885.71	
24" ID (10" Carrier Pipe)	LF	$971.91	
30" ID (12" Carrier Pipe)	LF	$1,226.20	
Plug Pipe			
6"-12" Pipe	EA	$444.50	
15"-36" Pipe	EA	$444.50	
42"-60" Pipe	EA	$574.50	
Pavement Edge Pipe			
Standard Pipe Underdrain	LF	$20.50	
RipRap			
Dry, Class I, 18"	SY	$82.00	
Dry, Class II, 18"	SY	$82.00	
Grouted, Class I, 18"	SY	$84.00	
Filter Fabric			
Class I	SY	$4.13	
Class II	SY	$4.13	
Class III	SY	$4.13	
Gabions (No excavations)			
Mattress	CY	$237.50	
Revetment	CY	$237.50	
Wall	CY	$237.50	
Paved Ditch (4" Thick)			
Concrete (Non-reinforced)	SY	$94.50	
Bituminous Concrete (4")	SY	$43.50	
Sodded Ditch			
Sodded Ditch(Incl Fine Grading)	SY	$15.03	
ROADS AND PARKING			
Soil Stabilization			
Cement 6%	SY/ Inch	$20.00	
Depth (in Inches):	Depth		
Lime 6%	SY/ Inch	$14.00	
Depth (in Inches):	Depth		
Subbase, Aggregated Material			

Base Type I	SY/ Inch	$12.95	3720
Depth (in Inches):	Depth	8	
Bituminous Concrete			
Base Course	SY/ Inch	$7.00	3720
Depth (in Inches):	Depth	3	
Intermediate Course	SY/ Inch	$7.00	
Depth (in Inches):	Depth		
Top Course	SY/ Inch	$7.00	3720
Depth (in Inches):	Depth	$2.00	
Prime Coat	SY	$1.38	
Tack Coat	SY	$1.38	
Driveway Restoration			
4 Concrete & 4 Gravel	SY	$75.00	
2 S-5 & 7 6 Gravel	SY	$29.98	
Shoulders, Type I			
Aggregated Base, 4	SY	$15.00	1452
Concrete Curbing			
Curb & Gutter CG6 & CG7	LF	$31.50	2760
Curb Cut, CG-12 DetectableSurf.	EA	$1,044.00	2
Entrances/ Driveways			
Commercial Entrance CG-11	SY	$87.00	
Commercial Entrance CG-13	SY	$87.00	
Residential Driveway Apron	SY	$1,252.00	
Guardrails			
Std. Blocked-out W beam(GR2)	LF	$53.50	
Std. W beam, Weak Post GR8	LF	$53.50	
Terminal, GR-6 (L=12 -6)	EA	$3,880.50	
Terminal, GR-7 (L=6 -3)	EA	$3,880.50	
Type I, GR-8 Terminal (L=25)	EA	$3,580.50	
Type II, GR-8 Terminal(L=13 -6)	EA	$1,701.00	
Terminal, MB-4 (L=37 -6)	EA	$3,580.50	
Type I, MB-5 Terminal(L=27 -1)	EA	$3,580.50	
Type II, MB-5 Terminal(L=13 -6)	EA	$1,701.00	
Miscellaneous			
Trash enclosure - Brick 6' high	LF	$7,336.50	
Reinforced Concrete Pad 6" to 8"	SY	$150.00	
Striping 4" width (VDOT Type B)	LF	$2.50	
Concrete Wheel Stops	EA	$90.00	
Parking Lot Striping	EA	$50.00	20
Sign Island	EA	$850.00	
Traffic Barricade	EA	$133.50	
Street Name Signs	EA	$594.50	1
Traffic Control Signs	EA	$512.00	4
Street Light (pole, bracket,light)	EA	$5,938.00	17

Sidewalk			
Concrete 4 w/WWF, No base	SY	$58.50	
Bitum. Conc, 2 w/4 Base	SY	$42.00	
4 Conc, No Reinf., No Base	SY	$58.50	
Handrail 3 Rail 1-1/4 #4 Finish	LF	$143.00	
Wood Chip Trail			
Trails(Incl Excavation &	SY	$77.00	
Grading) Wood chip, 4 wide	SY	$21.00	
Bituminous Trail			
6 to 10' wide	SY	$22.00	69
Paved Flume	SY	$100.00	
Stmwtr Conc Channel-Excav	SY	$97.00	
ADD Grass Lined-seeded	SY	$19.00	
ADD Grass Lined-sodded	SY	$26.00	
Outlet Protection			
Non-grouted Riprap 18	SY	$87.00	
Concrete 4	SY	$70.00	
Level Spreader	SY	$5.77	
Struc Streambank Protection			
Non-grouted Riprap 18	SY	$87.00	
Gabions	CY	$255.00	
Vegetative Erosion Control			
Sodding incl Fertilizing Banks	SY	$9.00	
Sodding incl Fertilizing Flat	SY	$9.00	
Seeding incl Fertilizing	SY	$3.00	
Soding W/Soil Treat &Watering	SY	$9.00	
Seeding W/Soil Treat &Watering	SY	$3.00	
Straw Mulch w/Tack	SY	$2.00	
Jute Mesh	SY	$2.00	
FEMA ProcessingLOMR/CLOMR	EA	$10,240.00	
As Built (Record Drawings)	EA	$12,967.50	1
SWM/BMP POND	LS	$0.00	
SIGNALIZATION	LS	$0.00	

EFFECTIVE PERIOD OF BOND (IN MONTHS)
TOTAL ESTIMATE OF COMPLETED WORK
+ 10% CONTINGENCY
GRAND TOTAL
FINAL PRICE (+ 4% ANNUAL INTEREST)

		BOND REDUCTION		
Final Price		QUANTITY COMPLETED (REDUCTION REQUEST)	UNIT COST	PREVIOUS QUANTITY COMPLETED
MOBILIZATION GENERAL				
$12,440.00			$0.00	
$0.00			$0.00	
$0.00			$0.00	
SURVEYING				
$49,658.90			$0.00	
R.O.W MONUMENTS SURVEYED IN PLACE				
$0.00			$0.00	
$0.00			$0.00	
EARTHWORK EXCAVATION				
$0.00			$0.00	
$0.00			$0.00	
$0.00			$0.00	
BORROW MATERIAL				
$0.00			$0.00	
$0.00			$0.00	
UNSUITABLE MATERIAL				
$0.00			$0.00	
$0.00			$0.00	
$0.00			$0.00	
CLEAR & GRUB				
$105,040.17			$0.00	
$0.00			$0.00	
LANDSCAPING				
$63,450.00			$0.00	
$179,775.00			$0.00	
PLANTING SHRUBS				
$0.00			$0.00	
$0.00			$0.00	
TREES				
$58,400.00			$0.00	
$0.00			$0.00	
$0.00			$0.00	
MISCELLANEOUS SITE IMPROVEMENTS				
$0.00			$0.00	
$0.00			$0.00	

$0.00		$0.00	
$0.00		$0.00	
$0.00		$0.00	
$0.00		$0.00	
$0.00		$0.00	
$0.00		$0.00	
$0.00		$0.00	
$16,495.00		$0.00	
STORM DRAINAGE			
$0.00		$0.00	
$0.00		$0.00	
$0.00		$0.00	
$0.00		$0.00	
$0.00		$0.00	
RCP CLASS III ROUND T & G W/MASTIC			
$0.00		$0.00	
$0.00		$0.00	
$0.00		$0.00	
$0.00		$0.00	
$0.00		$0.00	
$0.00		$0.00	
$0.00		$0.00	
$0.00		$0.00	
$0.00		$0.00	
$0.00		$0.00	
$0.00		$0.00	
$0.00		$0.00	
$0.00		$0.00	
$0.00		$0.00	
$0.00		$0.00	
$0.00		$0.00	
$0.00		$0.00	
$0.00		$0.00	
$0.00		$0.00	

$0.00		$0.00	
$0.00		$0.00	
$0.00		$0.00	
$0.00		$0.00	
$0.00		$0.00	
$0.00		$0.00	
$0.00		$0.00	
$0.00		$0.00	
$0.00		$0.00	
$0.00		$0.00	
$0.00		$0.00	
$0.00		$0.00	
$0.00		$0.00	
$0.00		$0.00	
$0.00		$0.00	
$0.00		$0.00	
$0.00		$0.00	
$0.00		$0.00	
$0.00		$0.00	
$0.00		$0.00	
$0.00		$0.00	
$0.00		$0.00	
$0.00		$0.00	
$0.00		$0.00	
$0.00		$0.00	
$0.00		$0.00	
$0.00		$0.00	
$0.00		$0.00	
$0.00		$0.00	
$0.00		$0.00	
$0.00		$0.00	
$0.00		$0.00	
$0.00		$0.00	
ELLIPTICAL PIPE - RCP CLASS III			
$0.00		$0.00	
$0.00		$0.00	
$0.00		$0.00	
$0.00		$0.00	

$0.00		$0.00	
$0.00		$0.00	
$0.00		$0.00	
$0.00		$0.00	
$0.00		$0.00	
$0.00		$0.00	
$0.00		$0.00	
$0.00		$0.00	
$0.00		$0.00	
$0.00		$0.00	
$0.00		$0.00	
$0.00		$0.00	
$0.00		$0.00	
$0.00		$0.00	
$0.00		$0.00	
$0.00		$0.00	
$0.00		$0.00	
$0.00		$0.00	
$0.00		$0.00	
$0.00		$0.00	
HDPE PIPE			
$0.00		$0.00	
$0.00		$0.00	
$0.00		$0.00	
$0.00		$0.00	
$33,264.56		$0.00	
$0.00		$0.00	
$0.00		$0.00	
$41,648.36		$0.00	
$0.00		$0.00	
$68,965.89		$0.00	
$0.00		$0.00	
$142,386.39		$0.00	
$0.00		$0.00	
$0.00		$0.00	

$0.00		$0.00	
$0.00		$0.00	
$0.00		$0.00	
$0.00		$0.00	
STORM STRUCTURES			
$0.00		$0.00	
$0.00		$0.00	
$0.00		$0.00	
$0.00		$0.00	
$0.00		$0.00	
$0.00		$0.00	
$0.00		$0.00	
$0.00		$0.00	
$0.00		$0.00	
$0.00		$0.00	
$0.00		$0.00	
$0.00		$0.00	
$0.00		$0.00	
$0.00		$0.00	
$0.00		$0.00	
$0.00		$0.00	
$0.00		$0.00	
$0.00		$0.00	
$0.00		$0.00	
$0.00		$0.00	
$0.00		$0.00	
$0.00		$0.00	
$0.00		$0.00	
$0.00		$0.00	
$0.00		$0.00	
$0.00		$0.00	
$0.00		$0.00	

$0.00		$0.00	
$0.00		$0.00	
$0.00		$0.00	
$0.00		$0.00	
$0.00		$0.00	
$0.00		$0.00	
$0.00		$0.00	
$0.00		$0.00	
$0.00		$0.00	
$0.00		$0.00	
$0.00		$0.00	
$0.00		$0.00	
$0.00		$0.00	
$0.00		$0.00	
$0.00		$0.00	
$0.00		$0.00	
MANHOLES			
$0.00		$0.00	
$0.00		$0.00	
$16,011.00		$0.00	
$0.00		$0.00	
$0.00		$0.00	
Drop Inlets			
$7,690.00		$0.00	
$0.00		$0.00	
$0.00		$0.00	
$0.00		$0.00	
Curb Drop Inlets			
$0.00		$0.00	
$0.00		$0.00	
$0.00		$0.00	
$8,534.24		$0.00	

$28,162.98		$0.00	
$0.00		$0.00	
$34,077.21		$0.00	
$0.00		$0.00	
$0.00		$0.00	
$0.00		$0.00	
$8,448.90		$0.00	
$18,587.58		$0.00	
$10,223.17		$0.00	
$0.00		$0.00	
$0.00		$0.00	
$0.00		$0.00	
$0.00		$0.00	
$0.00		$0.00	
$0.00		$0.00	
$0.00		$0.00	
$0.00		$0.00	
$0.00		$0.00	
$0.00		$0.00	
$0.00		$0.00	
$0.00		$0.00	
$0.00		$0.00	
$0.00		$0.00	
$0.00		$0.00	
$0.00		$0.00	
$0.00		$0.00	
$0.00		$0.00	
$0.00		$0.00	
$0.00		$0.00	
$0.00		$0.00	
$0.00		$0.00	
$0.00		$0.00	
$0.00		$0.00	
$0.00		$0.00	
$0.00		$0.00	
$0.00		$0.00	
$0.00		$0.00	
$0.00		$0.00	

$0.00		$0.00	
$0.00		$0.00	
$0.00		$0.00	
$0.00		$0.00	
$0.00		$0.00	
$0.00		$0.00	
$0.00		$0.00	
$0.00		$0.00	
$0.00		$0.00	
$0.00		$0.00	
$0.00		$0.00	
$0.00		$0.00	
$0.00		$0.00	
$0.00		$0.00	
$0.00		$0.00	
$0.00		$0.00	
$0.00		$0.00	
$0.00		$0.00	
$0.00		$0.00	
$0.00		$0.00	
$0.00		$0.00	
$0.00		$0.00	
$0.00		$0.00	
$0.00		$0.00	
$0.00		$0.00	
$0.00		$0.00	
$0.00		$0.00	
$0.00		$0.00	
$0.00		$0.00	
$0.00		$0.00	
$0.00		$0.00	
$0.00		$0.00	
$0.00		$0.00	
$0.00		$0.00	
$0.00		$0.00	
$0.00		$0.00	
$0.00		$0.00	
$0.00		$0.00	

$0.00		$0.00	
$0.00		$0.00	
$0.00		$0.00	
$0.00		$0.00	
$0.00		$0.00	
$0.00		$0.00	
$0.00		$0.00	
$0.00		$0.00	
$0.00		$0.00	
$0.00		$0.00	
$0.00		$0.00	
$0.00		$0.00	
$0.00		$0.00	
$0.00		$0.00	
$0.00		$0.00	
$0.00		$0.00	
$0.00		$0.00	
$0.00		$0.00	
$0.00		$0.00	
$0.00		$0.00	
$0.00		$0.00	
$0.00		$0.00	
$0.00		$0.00	
$0.00		$0.00	
$0.00		$0.00	
$0.00		$0.00	
$0.00		$0.00	
$0.00		$0.00	
$0.00		$0.00	
MISCELLANEOUS INLETS			

$0.00		$0.00	
$0.00		$0.00	
$0.00		$0.00	
$0.00		$0.00	
$0.00		$0.00	

Culverts

$0.00		$0.00	
$0.00		$0.00	
$0.00		$0.00	
$0.00		$0.00	
$0.00		$0.00	

$0.00		$0.00	
$0.00		$0.00	
$0.00		$0.00	
$0.00		$0.00	
$0.00		$0.00	

$0.00		$0.00	
$0.00		$0.00	
$0.00		$0.00	
$0.00		$0.00	

$0.00		$0.00	
$0.00		$0.00	
$0.00		$0.00	
$0.00		$0.00	
$0.00		$0.00	

$0.00		$0.00	
$0.00		$0.00	
$0.00		$0.00	
$0.00		$0.00	
$0.00		$0.00	

$0.00		$0.00	
$0.00		$0.00	
$0.00		$0.00	

$0.00		$0.00	
$0.00		$0.00	
$0.00		$0.00	
$0.00		$0.00	
$0.00		$0.00	
$0.00		$0.00	
MISCELLANEOUS STORM			
$0.00		$0.00	
$0.00		$0.00	
$0.00		$0.00	
$0.00		$0.00	
$0.00		$0.00	
$0.00		$0.00	
$0.00		$0.00	
$0.00		$0.00	
$0.00		$0.00	
$0.00		$0.00	
$0.00		$0.00	
$0.00		$0.00	
$0.00		$0.00	
$0.00		$0.00	
$0.00		$0.00	
$0.00		$0.00	
$0.00		$0.00	
$0.00		$0.00	
STREET CONSTRUCTION			
$0.00		$0.00	
		$0.00	
$0.00		$0.00	
		$0.00	

$385,392.00		$0.00	
		$0.00	
$78,120.00		$0.00	
		$0.00	
$0.00		$0.00	
		$0.00	
$52,080.00		$0.00	
		$0.00	
$0.00		$0.00	
$0.00		$0.00	
$0.00		$0.00	
$0.00		$0.00	
$21,780.00		$0.00	
$86,940.00		$0.00	
$2,088.00		$0.00	
$0.00		$0.00	
$0.00		$0.00	
$0.00		$0.00	
$0.00		$0.00	
$0.00		$0.00	
$0.00		$0.00	
$0.00		$0.00	
$0.00		$0.00	
$0.00		$0.00	
$0.00		$0.00	
$0.00		$0.00	
$0.00		$0.00	
$0.00		$0.00	
$0.00		$0.00	
$0.00		$0.00	
$0.00		$0.00	
$1,000.00		$0.00	
$0.00		$0.00	
$0.00		$0.00	
$594.50		$0.00	
$2,048.00		$0.00	
$100,946.00		$0.00	
SIDEWALKS AND TRAILS			

$0.00			$0.00	
$0.00			$0.00	
$0.00			$0.00	
HANDRAIL				
$0.00			$0.00	
$0.00			$0.00	
$0.00			$0.00	
1518			$0.00	
CRITICAL SLOPE STABILIZATION				
$0.00			$0.00	
$0.00			$0.00	
$0.00			$0.00	
$0.00			$0.00	
$0.00			$0.00	
$0.00			$0.00	
$0.00			$0.00	
$0.00			$0.00	
$0.00			$0.00	
$0.00			$0.00	
$0.00			$0.00	
$0.00			$0.00	
$0.00			$0.00	
$0.00			$0.00	
$0.00			$0.00	
$0.00			$0.00	
SPECIAL ITEMS				
$0.00			$0.00	
$12,967.50			$0.00	
$0.00			$0.00	
$0.00			$0.00	

12	EFFECTIVE PERIOD OF BOND (IN MONTHS)
$1,648,733.35	TOTAL BOND REDUCTION REQUEST
$164,873.34	+ 10% CONTINGENCY
$1,813,606.69	GRAND TOTAL
$1,886,150.95	FINAL BOND REDUCTION REQUEST (+4% ANNUAL INTEREST)

N			City Use Only
TOTAL QUANTITY COMPLETED (INCLUDING REDUCTION REQUEST)	EXTENSION	%COMPLETE	%APPROVED
0		0%	
0		0%	
0		0%	
0		0%	
0		0%	
0		0%	
0		0%	
0		0%	
0		0%	
0		0%	
0		0%	
0		0%	
0		0%	
0		0%	
0		0%	
0		0%	
0		0%	
0		0%	
0		0%	
0		0%	
0		0%	
0		0%	
0		0%	
0		0%	
0		0%	

0		0%	
0		0%	
0		0%	
0		0%	
0		0%	
0		0%	
0		0%	
0		0%	
0		0%	
0		0%	
0		0%	
0		0%	
0		0%	
0		0%	
0		0%	
0		0%	
0		0%	
0		0%	
0		0%	
0		0%	
0		0%	
0		0%	
0		0%	
0		0%	
0		0%	
0		0%	
0		0%	
0		0%	
0		0%	
0		0%	
0		0%	

0		0%	
0		0%	
0		0%	
0		0%	
0		0%	
0		0%	
0		0%	
0		0%	
0		0%	
0		0%	
0		0%	
0		0%	
0		0%	
0		0%	
0		0%	
0		0%	
0		0%	
0		0%	
0		0%	
0		0%	
0		0%	
0		0%	
0		0%	
0		0%	
0		0%	
0		0%	
0		0%	
0		0%	
0		0%	
0		0%	
0		0%	
0		0%	
0		0%	
0		0%	
0		0%	
0		0%	
0		0%	

0		0%	
0		0%	
0		0%	
0		0%	
0		0%	
0		0%	
0		0%	
0		0%	
0		0%	
0		0%	
0		0%	
0		0%	
0		0%	
0		0%	
0		0%	
0		0%	
0		0%	
0		0%	
0		0%	
0		0%	
0		0%	
0		0%	
0		0%	
0		0%	
0		0%	
0		0%	
0		0%	
0		0%	
0		0%	
0		0%	
0		0%	
0		0%	
0		0%	
0		0%	

0		0%	
0		0%	
0		0%	
0		0%	
0		0%	
0		0%	
0		0%	
0		0%	
0		0%	
0		0%	
0		0%	
0		0%	
0		0%	
0		0%	
0		0%	
0		0%	
0		0%	
0		0%	
0		0%	
0		0%	
0		0%	
0		0%	
0		0%	
0		0%	
0		0%	
0		0%	
0		0%	
0		0%	
0		0%	
0		0%	
0		0%	

0		0%	
0		0%	
0		0%	
0		0%	
0		0%	
0		0%	
0		0%	
0		0%	
0		0%	
0		0%	
0		0%	
0		0%	
0		0%	
0		0%	
0		0%	
0		0%	
0		0%	
0		0%	
0		0%	
0		0%	
0		0%	
0		0%	
0		0%	
0		0%	
0		0%	
0		0%	
0		0%	
0		0%	
0		0%	

0		0%	
0		0%	
0		0%	
0		0%	
0		0%	
0		0%	
0		0%	
0		0%	
0		0%	
0		0%	
0		0%	
0		0%	
0		0%	
0		0%	
0		0%	
0		0%	
0		0%	
0		0%	
0		0%	
0		0%	
0		0%	
0		0%	
0		0%	
0		0%	
0		0%	
0		0%	
0		0%	
0		0%	
0		0%	
0		0%	
0		0%	
0		0%	
0		0%	
0		0%	
0		0%	
0		0%	
0		0%	
0		0%	

0		0%	
0		0%	
0		0%	
0		0%	
0		0%	
0		0%	
0		0%	
0		0%	
0		0%	
0		0%	
0		0%	
0		0%	
0		0%	
0		0%	
0		0%	
0		0%	
0		0%	
0		0%	
0		0%	
0		0%	
0		0%	
0		0%	
0		0%	
0		0%	
0		0%	
0		0%	
0		0%	
0		0%	
0		0%	
0		0%	
0		0%	
0		0%	
0		0%	
0		0%	
0		0%	
0		0%	
0		0%	
0		0%	

0		0%	
0		0%	
0		0%	
0		0%	
0		0%	
0		0%	
0		0%	
0		0%	
0		0%	
0		0%	
0		0%	
0		0%	
0		0%	
0		0%	
0		0%	
0		0%	
0		0%	
0		0%	
0		0%	
0		0%	
0		0%	
0		0%	
0		0%	
0		0%	
0		0%	
0		0%	
0		0%	
0		0%	
0		0%	
0		0%	

0		0%	
0		0%	
0		0%	
0		0%	
0		0%	
0		0%	
0		0%	
0		0%	
0		0%	
0		0%	
0		0%	
0		0%	
0		0%	
0		0%	
0		0%	
0		0%	
0		0%	
0		0%	
0		0%	
0		0%	
0		0%	
0		0%	
0		0%	
0		0%	
0		0%	
0		0%	
0		0%	
0		0%	

0		0%	
0		0%	
0		0%	
0		0%	
0		0%	
0		0%	
0		0%	
0		0%	
0		0%	
0		0%	
0		0%	
0		0%	
0		0%	
0		0%	
0		0%	
0		0%	
0		0%	
0		0%	
0		0%	
0		0%	
0		0%	
0		0%	
0		0%	
0		0%	
0		0%	
0		0%	

0		0%	
0		0%	
0		0%	
0		0%	
0		0%	
0		0%	
0		0%	
0		0%	
0		0%	
0		0%	
0		0%	
0		0%	
0		0%	
0		0%	
0		0%	
0		0%	
0		0%	
0		0%	
0		0%	
0		0%	
0		0%	
0		0%	
0		0%	
0		0%	
0		0%	
0		0%	
0		0%	
0		0%	
0		0%	
0		0%	
0		0%	
0		0%	
0		0%	

0		0%	
0		0%	
0		0%	
0		0%	
0		0%	
0		0%	
0		0%	
0		0%	
0		0%	
0		0%	
0		0%	
0		0%	
0		0%	
0		0%	
0		0%	
0		0%	
0		0%	
0		0%	
0		0%	
0		0%	
0		0%	
0		0%	
0		0%	
0		0%	
0		0%	
0		0%	
0		0%	

$0.00
$0.00
$0.00
$0.00

TOTAL ESTIMATED - BOND REMAINING	$1,886,150.95

Kimley»Horn

Memorandum

To: Mark Flynn
Arcadia Land, Inc.
108 N. George Street, 2nd Floor
Charles Town, WV 25414

From: Mark Phillips, P.E.

Through: Mr. James Newman, AICP
City of Charles Town
101 E Washington Street
Charles Town, WV 25414

Date: April 14, 2025

Subject: Norborne Glebe Phases 11, 12, and 13 Bond Initiation Review

This memorandum summarizes our review of the Bond Initiation request for the Norborne Glebe Subdivision Phases 11, 12, and 13 Bond Initiation Application (dated March 31, 2025, prepared by Greenway Engineering). Using the Final Subdivision Plans and Comment Response Letters provided by the Applicant we have no further comments.

Kimley-Horn finds the Bond Initiation requests to be in conformance with the Plans and recommends approval of the initiation requests.

Thank you for the opportunity to review this Bond Initiation request. In the meantime, please feel free to contact us at 703-870-3631 should you have any questions.

KIMLEY-HORN & ASSOCIATES, INC.

Mark Phillips, P.E.
Project Manager
Associate

City Council
101 East Washington Street
Charles Town, WV 25414

Meeting: 05/05/25
Department: City Council
Category: Report
Initiator:

SCHEDULED

AGENDA ITEM (ID #)

2025-513: BR2025-04: Norborne Glebe Phase 12 - Bond Initiation

Proposed Motion: Approve the performance bond in the amount of $2,818,431.50 for the Norborne Glebe housing development Phase 12.

ATTACHMENTS:

- 1. Staff Report.pdf
- 2. Application.pdf
- 3. Bond estimate.xlsx
- 4. KH Review.pdf

Bond Initiation Request
BR2025-04

Date: For the May 5, 2025 City Council meeting
Applicant: Arcadia Land Inc.
Report by: James Newman, City Planner, Zoning/Subdivision Administrator.
Proposal: A bond initiation in the amount of $2,818,431.50

Norborne Glebe Phase 12

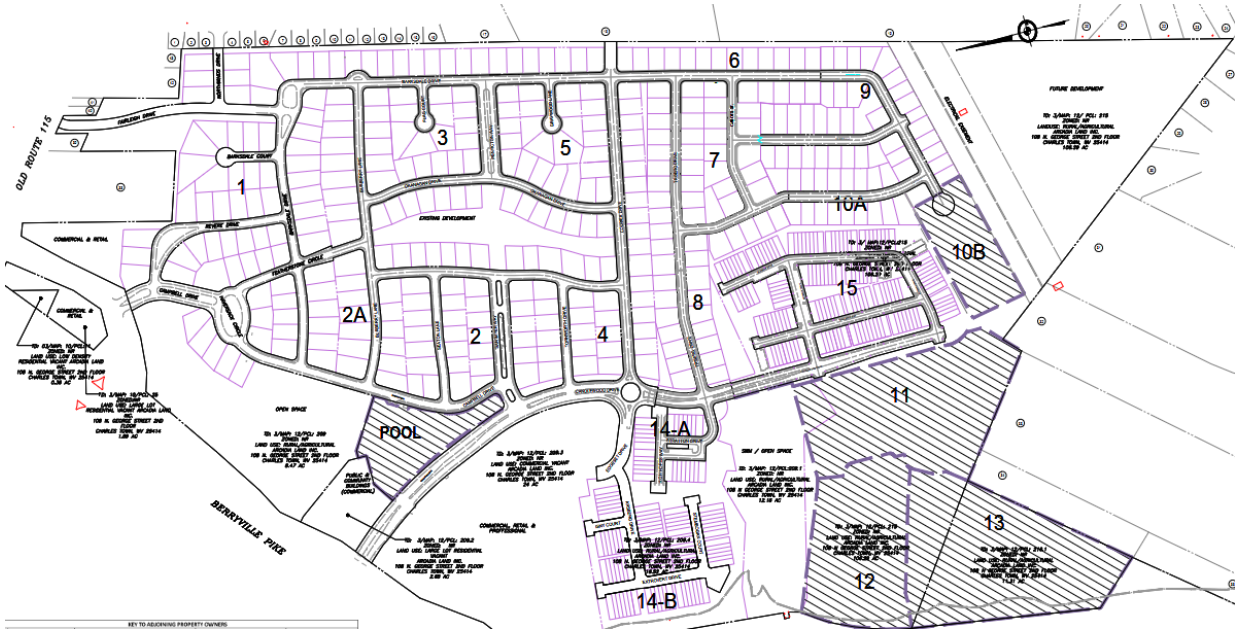

BACKGROUND

The applicant, Arcadia Land Inc., has submitted a bond initiation request for the Norborne Glebe housing development Phase 12. The applicant is requesting a bond initiation in the amount of $2,818,431.50This amount will cover performance bond issues (road paving, street lights, etc.).

A land disturbance bond was previously approved by Council on April 16, 2024 in the amount of $1,635,228.03 to cover phases 10B, 11, 12, and 13.

Bonds shall be required for public and other physical Improvements to be constructed under an approved Final S/LD Application. Such Improvements shall include, without limitation, Road, curb, gutter, sidewalk, trails, storm Drainage, traffic signalization and control, water and sanitary sewer infrastructure, and any other site-related Improvements required by the City of Charles Town for vehicular and pedestrian ingress and egress, for public access roadways, for Structures necessary to insure stability of critical slopes, for necessary utilities, and for Stormwater Management Facilities.

BOND COMMITTEE

At their April1 4, 2025 meeting, the City's Bond Committee discussed the application and recommend approval of the proposed initiation.

PLANNING COMMISSION

The Planning Commission considered this item at their April 28, 2025 meeting. Following discussion the Commission unanimously voted to recommend approval of the request.

RECOMMENDATION

Approval.

Norborne Glebe - Phase 12
Performance Bond

BOND REQUEST AND REDUCTION

1. APPLICATION TYPE :

☑ Bond Initiation – No application fee

☐ Bond Reduction – No application fee

☐ Bond Release – Application Fee: $85

2. FEES

Third-party review fees are assessed separately for each application, and will be sent to the applicant. All fees must be paid prior to approval.

3. PUBLIC NOTICE

Only bond release applications require a public hearing.

4. APPLICATION REQUIREMENTS

Please submit one application set with supporting materials in paper, and one copy in PDF format.

1. DATE January 28, 2025

2. PROJECT NAME Norborne Glebe Subdivision - Phase 12

Address N/A

3. APPLICANT'S NAME* Arcadia Land, Inc. Attn: Gary Endler

Address 108 N. George Street - 2nd Floor Charles Town, WV 25414

Telephone Number (703) 771-8000

Email Address gendler@arcadiacompanies.com

4. PROPERTY OWNER'S NAME Arcadia Land, Inc, Attn: Gary Endler

Address 108 N George Street - 2nd Floor Charles Town, WV 25414

Telephone Number (703) 771-8000

Email Address gendler@arcadiacompanies.com

*Applicants include: Property owner(s), Engineer(s), Surveyor(s), or Consultant(s)

5. DESCRIPTION OF REQUEST:

Requesting Bond Amount Establishment for the Performance Bond for Phase 12, Norborne Glebe Subdivision

6. A) CURRENT BOND AMOUNT $0

B) PROPOSED BOND AMOUNT $$2,816,299.67

C) CHANGE IN BONDED AMOUNT $0

7. PARCEL INVENTORY: (List all parcels that are part of this application):

Tax Map No.	Parcel No.	Tax Map No.	Parcel No.
3-12	215	3-12	216.1

8. PARCEL HISTORY: (List all pending or previously approved applications on the subject parcels inventoried above, including previous plat applications if this application is an amendment)

Application No.	Project Name and Phase	Status	Approval Date
SLD-2013-04	Norborne Glebe Phase 5	Approved	01/14/2014
SLD-2017-05	Norborne Glebe Phase 7-8	Approved	09/25/2018
SLD-2016-01	Norborne Glebe Phase 6	Approved	09/25/2018
SLD-2017-14	Norborne Glebe Phase 14A	Approved	09/25/2018
SLD-2021-02	Norborne Glebe Phase 14B	Approved	02/28/2022
SLD-2021-05	Norborne Glebe Phase 9&10A	Approved	10/13/2022
SLD-2022-03	Norborne Glebe Phase 15	Approved	03/27/2023
SP-2022-06	Norborne Glebe Pool	Approved	07/28/2023
SLD-2022-06	Norborne Glebe Phase 10B-13	Approved	02/27/2024

9. <u>BOND RELEASE</u> – SUPPLEMENTAL MATERIALS REQUIRED:

A. Copies of inspection and test reports if work was inspected and tested by a third-party inspector.

B. Certification that all bonded Improvements, have been completed in accordance with the approved plans, profiles, and specifications and the requirements of any applicable manual.

C. A copy of the City-approved As-Built Drawings as required for facilities within public rights-of-way or Easements.

D. A letter from a Professional Engineer or Professional Land Surveyor certifying that property corners and Monuments have been set as required under this Ordinance.

Continued on next page.

E. Documentation of acceptance by WVDOH for public roadways and rights-of-way, or a maintenance and indemnification agreement and bond approved by the Planning Commission for public roadways that have been completed in accordance with WVDOH standards but which, due to factors other than their quality of construction, are not eligible for acceptance by WVDOH.

F. **For private roadways**, a letter of acceptance by the entity responsible for maintenance and a Latent Defects Indemnification Agreement and Bond.

   Before a Performance Agreement and surety for private roadway construction shall be released, a Latent Defects Indemnification Agreement and Bond shall be provided by the applicant/Developer and approved by the Planning Commission. The guarantee provided by such Agreement and Bond must be for a period of two (2) years following the date of performance bond release, and must be in an amount equal to no less than 5% of the original performance bond estimate.

G. **Landscaping Surety** is required to ensure the landscaping shown on a Major S/LD plan is maintained for one (1) year. The one (1) year shall start from the date at which the surety for the site has been released, with the exception of this landscaping surety. The landscaping surety amount shall not be less than $5,000.00 or 10% of the total landscaping cost for the project, which ever is greater.

APPLICANT CERTIFICATION

I certify that, to the best of my knowledge, the submitted information and statements are true and correct. I also certify that I have received and read Article 1335 of the S/LD Ordinance.

Signature of Applicant _____ Date 5/7/2025

Signature of Property Owner (If different than Applicant)

_____ Date _____

Please submit an original completed application to the following:

At City Hall:	Or	Via Mail:
Subdivision Administrator City of Charles Town 101 E. Washington Street Charles Town, WV 25414		Subdivision Administrator City of Charles Town PO BOX 14 Charles Town, WV 25414

FOR CITY USE ONLY

Application Number:_____ Date Application Received:_____

Fee: $_____ Check No._____

Receipt No._____

Site Inspection Date:_____ Inspector:_____

Planning Commission Approval:_____ Date:_____

City Council Approval:_____ Date:_____

Comments:_____

_____

_____

_____

_____

BOND ESTIMATE			
ITEM	UNIT	UNIT COST	QUANTITY
Mobilization	LS	$12,440.00	1
Field Office	EA	$3,490.00	
Job Sign	EA	$1,340.00	
Steel Pipe Property Corner Marker Incl. Survey	EA	$320.38	200
RM--1		$825.00	
RM--2		$764.00	
Regular Bulk used as Fill	CY	$4.50	
Rock, Rip	CY	$51.50	
Rock, Blast	CY	$55.00	
Buy, Load, Haul 10 Mi. Select Material	CY	$42.00	
Fill and Compaction of On-site Borrow	CY	$44.00	
Load and Haul, 20 mi R/T	CY	$36.56	
Dump Charge	CY	$62.50	
Site Grading	SY	$1.25	
Light	AC	$14,548.50	10.63
Heavy	AC	$26,699.49	
Seeding	SY	$3.00	21780
Sodding	SY	$8.50	21780
18"	EA	$70.00	
24"	EA	$90.00	
6'-8' (1-2 in. Caliper)	EA	$400.00	93
8'-10' (2.5-3 in. Caliper)	EA	$700.00	
Tree Protection	LF	$11.13	
Timber Wall (less than 6 ft)	LF	$325.00	
Dry Rubble RW-1 (H=6')	LF	$450.00	

Mortared Rubble RW-1A (H=6')	LF	$535.00	
Concrete Gravity RW-2 (H=6')	LF	$589.50	
Concrete Gravity RW-3 (H=6')	LF	$1,037.50	
FENCING			
Std. Fence (H=5') FR-5	LF	$56.00	
Farm Fence (H=5') FR-3A	LF	$37.50	
Chain Link Fence (H=6') FR 2-B	LF	$62.00	
Board Fence (H=6')	LF	$62.00	
TOTS LOTS			
Tot Lot	EA	$16,495.00	
STORM SEWER			
NOTE: All pipe unit prices include trench, excavation, bedding, pipe, & backfill			
Rock Excavation for All Pipe Types			
Less than 1,500 CY (Blasting)	CY	$110.00	
More than 1,500 CY (Blasting)	CY	$90.00	
Less than 1,500 CY (Hoe Ram)	CY	$220.00	
More than 1,500 CY (Hoe Ram)	CY	$180.00	
Trench De-Watering			
Trench De-Watering	LF	$4.00	
12" Pipe (RCP III)			
0'-8' Cut	LF	$100.00	
8'-14' Cut	LF	$140.00	
Add cost for Class IV	LF	$1.90	
O-Ring	LF	$12.36	
15" Pipe (RCP III)			
0'-10' Cut	LF	$100.00	
10'-16'	LF	$156.00	
Add Cost for Class IV	LF	$1.48	
O-Ring	LF	$8.58	
18" Pipe (RCP III)			
0'-10' Cut	LF	$100.00	
10' -16' Cut	LF	$160.00	
Add Cost for Class IV	LF	$3.20	
O-Ring	LF	$11.20	
21" Pipe (RCP III)			
0'-8' Cut	LF	$115.00	
8'-14' Cut	LF	$174.80	
Add cost for Class IV	LF	$4.40	
O-Ring	LF	$20.80	
24" Pipe (RCP III)			
0'- 10' Cut	LF	$140.00	
10'-16'	LF	$196.00	
Add Cost for Class IV	LF	$5.04	

O-Ring	LF	$22.40	
27" Pipe (RCP III)			
0'- 10' Cut	LF	$123.20	
10' -16' Cut	LF	$195.03	
Add Cost for Class IV	LF	$6.40	
O-Ring	LF	$24.00	
30" Pipe (RCP III)			
0'- 8' Cut	LF	$169.40	
8'-14' Cut	LF	$256.66	
Add cost for Class IV	LF	$9.60	
O-Ring	LF	$27.60	
33" Pipe (RCP III)			
0'- 10' Cut	LF	$240.00	
10'-16'	LF	$333.00	
Add Cost for Class IV	LF	$13.50	
O-Ring	LF	$45.80	
36" Pipe (RCP III)			
0'-10' Cut	LF	$249.60	
10' -16' Cut	LF	$363.92	
Add Cost for Class IV	LF	$12.40	
O-Ring	LF	$36.40	
42" Pipe (RCP III)			
0'- 8' Cut	LF	$289.54	
8'-14' Cut	LF	$413.46	
Add cost for Class IV	LF	$19.20	
O-Ring	LF	$56.72	
48" Pipe (RCP III)			
0'-10' Cut	LF	$320.52	
10'-16'	LF	$442.31	
Add Cost for Class IV	LF	$20.00	
O-Ring	LF	$69.36	
54" Pipe (RCP III)			
0' - 10' Cut	LF	$420.00	
10' -16' Cut	LF	$541.38	
Add Cost for Class IV	LF	$30.00	
O-Ring	LF	$70.96	
60" Pipe (RCP III)			
0'-10' Cut	LF	$420.00	
10' -16' Cut	LF	$498.48	
Add Cost for Class IV	LF	$36.00	
O-Ring	LF	$77.84	
23"x14" (18" Equiv- RCP III)			
0'10' Cut	LF	$190.00	
10'-16' Cut	LF	$278.60	
Add cost for Class IV	LF	$41.60	
O-Ring	LF	$109.80	

30"x19" (24" Equiv- RCP III			
0'10' Cut	LF	$190.00	
10'-16' Cut	LF	$329.25	
Add cost for Class IV	LF	$15.07	
O-Ring	LF	$109.79	
38"x24" (30" Equiv- RCP III			
0'10' Cut	LF	$190.00	
10'-16' Cut	LF	$423.78	
Add cost for Class IV	LF	$21.38	
O-Ring	LF	$129.92	
45"x29" (36" Equiv- RCP III)			
0'10' Cut	LF	$370.00	
10'-16' Cut	LF	$526.88	
Add cost for Class IV	LF	$25.45	
O-Ring	LF	$119.63	
1			
0'12' Cut	LF	$370.00	
10'-18' Cut	LF	$528.36	
Add cost for Class IV	LF	$38.87	
O-Ring	LF	$149.26	
60"x38" (48" Equiv- RCP III)			
0'12' Cut	LF	$370.00	
10'-18' Cut	LF	$543.90	
Add cost for Class IV	LF	$46.46	
O-Ring	LF	$177.11	
8" Pipe			
0'-8' Cut	LF	$50.00	
8'-14' Cut	LF	$75.30	
12" Pipe			
0'-8' Cut	LF	$67.50	
8'-14' Cut	LF	$100.04	
15" Pipe			
0'-8' Cut	LF	$87.08	379
8'-16' Cut	LF	$129.65	
18" Pipe			
0'-8' Cut	LF	$114.33	69
8'-16' Cut	LF	$170.69	
24" Pipe			
0'-8' Cut	LF	$132.62	340
8'-16' Cut	LF	$197.61	29
30" Pipe			
0'-8' Cut	LF	$157.42	909
8'-16' Cut	LF	$236.13	
36" Pipe			
0'-8' Cut	LF	$200.00	
8'-16' Cut	LF	$298.00	

42" Pipe			
0'-8' Cut	LF	$224.20	
8'-16' Cut	LF	$334.06	
48" Pipe			
0'-8' Cut	LF	$253.35	
8'-16' Cut	LF	$377.49	
END SECTIONS			
End Sections (ES-1), Concrete Pipe Size			
15"	EA	$1,389.00	
18"	EA	$1,583.46	
21"	EA	$1,805.14	1
24"	EA	$2,057.86	
27"	EA	$2,345.97	
30"	EA	$2,674.40	3
36"	EA	$3,048.82	
42"	EA	$3,558.50	
48"	EA	$4,056.69	
54"	EA	$4,624.63	
60"	EA	$5,272.07	
ENDWALLS			
EW-1 (Pre-Cast) Round Pipe Size			
15"	EA	$2,433.00	
18"	EA	$2,724.96	
24"	EA	$3,051.96	
30"	EA	$3,418.19	
36"	EA	$3,828.37	
EW-1 Cast in Place [Round Pipe Size]			
15"	EA	$2,591.15	
18"	EA	$2,902.08	
24"	EA	$3,250.33	
30"	EA	$3,640.37	
36"	EA	$4,077.22	
EW-1A (Pre-Cast) Elliptical Pipe Size			
23" X 14" (18")	EA	$1,335.00	
30" X 19" (24")	EA	$1,495.20	
38 X 24" (30")	EA	$1,879.50	
45 X 29" (36")	EA	$2,105.04	
53" X 34" (42")	EA	$2,791.50	
EW-1A (Cast in Place)Elliptical Pipe Size			
23" X 14" (18")	EA	$1,318.50	
30" X 19" (24")	EA	$1,318.50	
38 X 24" (30")	EA	$2,257.00	
45 X 29" (36")	EA	$2,257.00	
53" X 34" (42")	EA	$3,217.50	
EW-2 (PreCast) Round Size Pipe Size			
42"	EA	$8,324.00	

48"	EA	$9,322.88	
54"	EA	$10,441.63	
60"	EA	$11,694.62	
72"	EA	$12,675.50	
84"	EA	$14,196.56	
EW-2 (Cast in Place) Round Size Pipe Size			
42"	EA	$9,255.50	
48"	EA	$10,366.16	
54"	EA	$11,610.10	
60"	EA	$13,003.31	
72"	EA	$15,747.00	
84"	EA	$17,636.64	
EW-6PC [Double Pipe] Pipe Size			
2-15"	EA	$2,123.00	
2-18"	EA	$2,377.76	
2-24"	EA	$2,663.09	
2-30"	EA	$4,096.00	
2-36"	EA	$4,587.52	
Standard Brick Manhole Std Frame & Cover (MH-1)			
6' Depth	EA	$6,048.00	
Depth Below 6'	VF	$230.00	
Standard Precast Manhole Std Frame & Cover (MH-2)		$5,337.00	2
Additional Cost (Amount in parentheses to be added to the above unit costs)			
Watertight Fr/Cover (Add 110)	EA	$579.00	
Heavy Duty Fr/ Cover (Add 82)	VF	$599.00	
Cast in Place 48"			
Drop Inlet (DI-1) 12"-24" Pipe0-10 VF	EA	$7,690.00	2
Drop Inlet (DI-1A) 12"-24" Pipe10-20 VF	EA	$7,690.00	
Drop Inlet (DI-2A) 12"-24" Pipe0-10 VF, 10' throat	EA	$9,458.70	
Drop Inlet (DI-2A) 12"-24" Pipe10-20 VF, 10' throat	EA	$11,634.20	
Curb Drop Inlet (DI-3A)			
12"-30" Pipe (Invert Depth (H) =0'-8') Inlet Length 2'-6"	EA	$7,460.00	
Curb Drop Inlet (DI-3AA)			
12"-30" Pipe (Invert Depth (H) =8'-	EA	$9,772.60	
Curb Drop Inlet (DI-3B) 12"-30" Pipe (Invert Depth (H) = 0 '-8') Inlet Length			
4'	EA	$7,758.40	
6'	EA	$8,534.24	2

8'	EA	$9,387.66	5
10'	EA	$10,326.43	1
12'	EA	$11,359.07	
16'	EA	$12,494.98	1
20'	EA	$13,744.48	
Curb Drop Inlet (DI-3BB) 12"-30" Pipe (Invert Depth (H) = 0 '-8') Inlet Length			
4'	EA	$7,680.82	1
6'	EA	$8,448.90	2
8'	EA	$9,293.79	2
10'	EA	$10,223.17	1
12'	EA	$11,245.48	
16'	EA	$12,370.03	
20'	EA	$13,607.03	
Curb Drop Inlet (DI-3C) 12"-30" Pipe (Invert Depth (H) = 0 '-8') Inlet Length			
6'	EA	$7,204.61	
8'	EA	$7,925.07	2
10'	EA	$8,717.57	
12'	EA	$9,589.33	
16'	EA	$10,548.26	
20'	EA	$11,603.09	
Curb Drop Inlet (DI-3CC) 12"-30" Pipe (Invert Depth (H) = 0 '-8') Inlet Length			
6'	EA	$8,573.48	
8'	EA	$9,430.83	
10'	EA	$10,373.91	
12'	EA	$11,411.30	
16'	EA	$12,552.43	
20'	EA	$13,807.68	
Curb Drop Inlet (DI-3D)			
12"-30" Pipe (Invert Depth (H) =0'-8') Inlet Length 2'-6"	EA	$6,430.11	
Curb Drop Inlet (DI-3DD)			
12"-30" Pipe (Invert Depth	EA	$7,587.53	
Curb Drop Inlet (DI-3E) 12"-30" Pipe (Invert Depth (H) = 0 '-8') Inlet Length			
4'	EA	$7,460.00	
8'	EA	$7,982.20	
10'	EA	$8,540.95	
12'	EA	$9,138.82	
16'	EA	$9,778.54	
20'	EA	$10,463.04	
Curb Drop Inlet (DI-3EE) 12"-30" Pipe (Invert Depth (H) = 8'-20') Inlet Length			
6'	EA	$11,509.34	
8'	EA	$12,314.99	
10'	EA	$13,177.04	
12'	EA	$14,099.44	
16'	EA	$15,086.40	
20'	EA	$16,142.44	
Curb Drop Inlet (DI-3F) 12"-30" Pipe (Invert Depth (H) = 0 '-8') Inlet Length			

6'	EA	$6,855.74	
8'	EA	$7,335.64	
10'	EA	$7,849.14	
12'	EA	$8,398.58	
16'	EA	$8,986.48	
20'	EA	$9,615.53	
Curb Drop Inlet (DI-3FF) 12"-30" Pipe (Invert Depth (H) = 8'-20') Inlet Length			
6'	EA	$14,671.28	
8'	EA	$15,698.27	
10'	EA	$16,797.15	
12'	EA	$17,972.95	
16'	EA	$19,231.06	
20'	EA	$20,577.23	
Curb Drop Inlet (DI-4A) 36"-48" Pipe (Invert Depth (H) = 8'-20') Inlet Length			
4'	EA	$10,020.00	
Curb Drop Inlet (DI-4AA) 36"-48" Pipe (Invert Depth (H) = 8'-20') Inlet Length			
4'	EA	$10,020.00	
Curb Drop Inlet (DI-4B) 36"-48" Pipe (Invert Depth (H) = 0'-8') Inlet Length			
6'	EA	$8,802.77	
8'	EA	$9,418.96	
10'	EA	$10,078.29	
12'	EA	$10,783.77	
16'	EA	$11,538.64	
20'	EA	$12,346.34	
Curb Drop Inlet (DI-4BB) 36"-48" Pipe (Invert Depth (H) = 8'-20') Inlet Length			
6'	EA	$17,429.48	
8'	EA	$18,649.55	
10'	EA	$19,955.02	
12'	EA	$21,351.87	
16'	EA	$22,846.50	
20'	EA	$24,445.75	
Curb Drop Inlet (DI-4C) 36"-48" Pipe (Invert Depth (H) = 0'-8') Inlet Length			
8'	EA	$9,418.96	
10'	EA	$10,078.29	
12'	EA	$10,783.77	
16'	EA	$11,538.64	
20'	EA	$12,346.34	
Curb Drop Inlet (DI-4CC) 36"-48" Pipe (Invert Depth (H) = 8'-20') Inlet Length			
8'	EA	$22,417.13	
10'	EA	$23,986.33	
12'	EA	$25,665.38	
16'	EA	$27,461.95	
20'	EA	$29,384.29	
Curb Drop Inlet (DI-4D)			
36"-48" Pipe (Invert Depth (H) =8'16') Inlet Length 4'	EA	$8,279.27	
Curb Drop Inlet (DI-4DD)			

36"-48" Pipe (Invert Depth (H)	EA	$16,392.95	
Curb Drop Inlet (DI-4E) 36"-48" Pipe (Invert Depth (H) = 0'-8') Inlet Length			
6'	EA	$9,016.12	
8'	EA	$9,647.25	
10'	EA	$10,322.56	
12'	EA	$11,045.14	
16'	EA	$11,818.30	
20'	EA	$12,645.58	
Curb Drop Inlet (DI-4EE) 36"-48" Pipe (Invert Depth (H) = 8'-16') Inlet Length			
6'	EA	$15,688.06	
8'	EA	$16,786.22	
10'	EA	$17,961.26	
12'	EA	$19,218.54	
16'	EA	$20,563.84	
20'	EA	$22,003.31	
Curb Drop Inlet (DI-4F) 36"-48" Pipe (Invert Depth (H) = 0'-8') Inlet Length			
8'	EA	$10,040.36	
10'	EA	$10,743.18	
12'	EA	$11,495.20	
16'	EA	$12,299.87	
20'	EA	$13,160.86	
Curb Drop Inlet (DI-4FF) 36"-48" Pipe (Invert Depth (H) = 8'-16') Inlet Length			
8'	EA	$15,140.86	
10'	EA	$16,200.72	
12'	EA	$17,334.77	
16'	EA	$18,548.20	
20'	EA	$19,846.57	
Median Drop Inlets - CIP			
Median Drop Inlets (DI-6A) 12"-24"Pipe Inlet (H=8')	EA	$6,032.00	
Median Drop Inlets (DI-6B) 12"-24"Pipe Inlet (H=8')	EA	$6,080.00	
Median Drop Inlets (DI-6C) 30"-48"Pipe Inlet (H=10')	EA	$7,737.50	
Median Drop Inlets (DI-6D) 30"-48"Pipe Inlet (H=10')	EA	$7,805.00	
Median Drop Inlets (DI-7) Type III Top 12"-42" Pipe Inlet (H=10')	EA	$8,548.00	
Median Drop Inlets (DI-7A) Type III Top 12"-42" Pipe Inlet (H=10')	EA	$8,548.00	
Median Drop Inlets (DI-7B) Type III Top 12"-42" Pipe Inlet (H=10')	EA	$8,548.00	

Median Drop Inlets (DI-5) Type III Top 12"-42" Pipe Inlet (H=8')	EA	$6,569.08	
Standard Yard Inlet (YI-1) 12"-48" Pipe (Invert Depth (H)= 0'-8') Inlet Length 4' (No Aprons)		$5,969.49	
Add Yard Inlet Apron	THROAT	$320.54	
Standard Yard Inlet (YI-1) 12"-48" Pipe (Invert Depth (H)= 0'-8') Inlet Length 4' (No Aprons)	EA	$6,444.64	
Add Yard Inlet Apron	THROAT	$320.54	
Single Box Culvert (BC-1A) Fills to 25'			
4' X 4'	LF	$473.00	
5' X 5'	LF	$563.00	
6' X 6'	LF	$689.00	
8' X 8'	LF	$944.00	
10' X 10'	LF	$1,159.00	
Double Box Culvert (BC-2b) Fills to 25'			
4' X 4'	LF	$792.40	
5' X 5'	LF	$987.00	
6' X 6'	LF	$1,195.60	
8' X 8'	LF	$1,607.20	
10' X 10'	LF	$1,975.40	
Oversized Single Box Culvert (BBC-1) Fills to 25'			
12' X 6'	LF	$1,488.50	
12' X 8'	LF	$1,488.50	
12' X 10'	LF	$1,771.50	
12' X 12'	LF	$1,771.50	
Triple Box Culvert (BC-3B) Fills to 25'			
4' X 4'	LF	$1,129.55	
5' X 5'	LF	$1,399.25	
6' X 6'	LF	$1,755.95	
8' X 8'	LF	$2,367.85	
10' X 10'	LF	$3,607.60	
Quadruple Box Culvert (BC-4B) Fills to 25'			
4' X 4'	LF	$1,431.15	
5' X 5'	LF	$1,776.25	
6' X 6'	LF	$2,208.35	
8' X 8'	LF	$2,170.65	
10' X 10'	LF	$4,110.75	
Standard Wing for Box Culvert (1 Side Only) Height of Box			
4'	EA	$926.50	
5'	EA	$1,390.00	
6'	EA	$1,853.50	

8'	EA	$3,426.50	
10'	EA	$4,558.00	
Standard Wing for Box Culvert (BBC-W) Height of Box			
6'	EA	$1,817.00	
8'	EA	$3,007.50	
10'	EA	$4,497.50	
12'	EA	$6,567.00	
Connection to Existing Structure			
15"-36" Pipe	EA	$1,584.00	
42"-60" Pipe	EA	$1,584.00	
Casing Pipe, Bore and Jack (3/8" wall)			
22" ID (6"-8" Carrier Pipe)	LF	$885.71	
24" ID (10" Carrier Pipe)	LF	$971.91	
30" ID (12" Carrier Pipe)	LF	$1,226.20	
Plug Pipe			
6"-12" Pipe	EA	$444.50	
15"-36" Pipe	EA	$444.50	
42"-60" Pipe	EA	$574.50	
Pavement Edge Pipe			
Standard Pipe Underdrain	LF	$20.50	
RipRap			
Dry, Class I, 18"	SY	$82.00	46.67
Dry, Class II, 18"	SY	$82.00	
Grouted, Class I, 18"	SY	$84.00	
Filter Fabric			
Class I	SY	$4.13	
Class II	SY	$4.13	
Class III	SY	$4.13	
Gabions (No excavations)			
Mattress	CY	$237.50	
Revetment	CY	$237.50	
Wall	CY	$237.50	
Paved Ditch (4" Thick)			
Concrete (Non-reinforced)	SY	$94.50	
Bituminous Concrete (4")	SY	$43.50	
Sodded Ditch			
Sodded Ditch(Incl Fine Grading)	SY	$15.03	
ROADS AND PARKING			
Soil Stabilization			
Cement 6%	SY/ Inch	$20.00	
Depth (in Inches):	Depth		
Lime 6%	SY/ Inch	$14.00	
Depth (in Inches):	Depth		
Subbase, Aggregated Material			

Base Type I	SY/ Inch	$12.95	8400
Depth (in Inches):	Depth	8	
Bituminous Concrete			
Base Course	SY/ Inch	$7.00	8400
Depth (in Inches):	Depth	3	
Intermediate Course	SY/ Inch	$7.00	
Depth (in Inches):	Depth		
Top Course	SY/ Inch	$7.00	8400
Depth (in Inches):	Depth	$2.00	
Prime Coat	SY	$1.38	
Tack Coat	SY	$1.38	
Driveway Restoration			
4 Concrete & 4 Gravel	SY	$75.00	
2 S-5 & 7 6 Gravel	SY	$29.98	
Shoulders, Type I			
Aggregated Base, 4	SY	$15.00	2420
Concrete Curbing			
Curb & Gutter CG6 & CG7	LF	$31.50	4675
Curb Cut, CG-12 DetectableSurf.	EA	$1,044.00	6
Entrances/ Driveways			
Commercial Entrance CG-11	SY	$87.00	
Commercial Entrance CG-13	SY	$87.00	
Residential Driveway Apron	SY	$1,252.00	
Guardrails			
Std. Blocked-out W beam(GR2)	LF	$53.50	
Std. W beam, Weak Post GR8	LF	$53.50	
Terminal, GR-6 (L=12 -6)	EA	$3,880.50	
Terminal, GR-7 (L=6 -3)	EA	$3,880.50	
Type I, GR-8 Terminal (L=25)	EA	$3,580.50	
Type II, GR-8 Terminal(L=13 -6)	EA	$1,701.00	
Terminal, MB-4 (L=37 -6)	EA	$3,580.50	
Type I, MB-5 Terminal(L=27 -1)	EA	$3,580.50	
Type II, MB-5 Terminal(L=13 -6)	EA	$1,701.00	
Miscellaneous			
Trash enclosure - Brick 6' high	LF	$7,336.50	
Reinforced Concrete Pad 6" to 8"	SY	$150.00	
Striping 4" width (VDOT Type B)	LF	$2.50	
Concrete Wheel Stops	EA	$90.00	
Parking Lot Striping	EA	$50.00	14
Sign Island	EA	$850.00	
Traffic Barricade	EA	$133.50	
Street Name Signs	EA	$594.50	4
Traffic Control Signs	EA	$512.00	5
Street Light (pole, bracket,light)	EA	$5,938.00	22

Sidewalk			
Concrete 4 w/WWF, No base	SY	$58.50	
Bitum. Conc, 2 w/4 Base	SY	$42.00	
4 Conc, No Reinf., No Base	SY	$58.50	
Handrail 3 Rail 1-1/4 #4 Finish	LF	$143.00	
Wood Chip Trail			
Trails(Incl Excavation &	SY	$77.00	
Grading) Wood chip, 4 wide	SY	$21.00	
Bituminous Trail			
6 to 10' wide	SY	$22.00	497
Paved Flume	SY	$100.00	
Stmwtr Conc Channel-Excav	SY	$97.00	
ADD Grass Lined-seeded	SY	$19.00	
ADD Grass Lined-sodded	SY	$26.00	
Outlet Protection			
Non-grouted Riprap 18	SY	$87.00	
Concrete 4	SY	$70.00	
Level Spreader	SY	$5.77	
Struc Streambank Protection			
Non-grouted Riprap 18	SY	$87.00	
Gabions	CY	$255.00	
Vegetative Erosion Control			
Sodding incl Fertilizing Banks	SY	$9.00	
Sodding incl Fertilizing Flat	SY	$9.00	
Seeding incl Fertilizing	SY	$3.00	
Soding W/Soil Treat &Watering	SY	$9.00	
Seeding W/Soil Treat &Watering	SY	$3.00	
Straw Mulch w/Tack	SY	$2.00	
Jute Mesh	SY	$2.00	
FEMA ProcessingLOMR/CLOMR	EA	$10,240.00	
As Built (Record Drawings)	EA	$12,967.50	1
SWM/BMP POND	LS	$0.00	
SIGNALIZATION	LS	$0.00	

EFFECTIVE PERIOD OF BOND (IN MONTHS)
TOTAL ESTIMATE OF COMPLETED WORK
+ 10% CONTINGENCY
GRAND TOTAL
FINAL PRICE (+ 4% ANNUAL INTEREST)

		BOND REDUCTION		
Final Price		QUANTITY COMPLETED (REDUCTION REQUEST)	UNIT COST	PREVIOUS QUANTITY COMPLETED
MOBILIZATION GENERAL				
$12,440.00			$0.00	
$0.00			$0.00	
$0.00			$0.00	
SURVEYING				
$64,076.00			$0.00	
R.O.W MONUMENTS SURVEYED IN PLACE				
$0.00			$0.00	
$0.00			$0.00	
EARTHWORK EXCAVATION				
$0.00			$0.00	
$0.00			$0.00	
$0.00			$0.00	
BORROW MATERIAL				
$0.00			$0.00	
$0.00			$0.00	
UNSUITABLE MATERIAL				
$0.00			$0.00	
$0.00			$0.00	
$0.00			$0.00	
CLEAR & GRUB				
$154,650.56			$0.00	
$0.00			$0.00	
LANDSCAPING				
$65,340.00			$0.00	
$185,130.00			$0.00	
PLANTING SHRUBS				
$0.00			$0.00	
$0.00			$0.00	
TREES				
$37,200.00			$0.00	
$0.00			$0.00	
$0.00			$0.00	
MISCELLANEOUS SITE IMPROVEMENTS				
$0.00			$0.00	
$0.00			$0.00	

$0.00		$0.00	
$0.00		$0.00	
$0.00		$0.00	
$0.00		$0.00	
$0.00		$0.00	
$0.00		$0.00	
$0.00		$0.00	
$0.00		$0.00	
STORM DRAINAGE			
$0.00		$0.00	
$0.00		$0.00	
$0.00		$0.00	
$0.00		$0.00	
$0.00		$0.00	
RCP CLASS III ROUND T & G W/MASTIC			
$0.00		$0.00	
$0.00		$0.00	
$0.00		$0.00	
$0.00		$0.00	
$0.00		$0.00	
$0.00		$0.00	
$0.00		$0.00	
$0.00		$0.00	
$0.00		$0.00	
$0.00		$0.00	
$0.00		$0.00	
$0.00		$0.00	
$0.00		$0.00	
$0.00		$0.00	
$0.00		$0.00	
$0.00		$0.00	
$0.00		$0.00	
$0.00		$0.00	

$0.00		$0.00	
$0.00		$0.00	
$0.00		$0.00	
$0.00		$0.00	
$0.00		$0.00	
$0.00		$0.00	
$0.00		$0.00	
$0.00		$0.00	
$0.00		$0.00	
$0.00		$0.00	
$0.00		$0.00	
$0.00		$0.00	
$0.00		$0.00	
$0.00		$0.00	
$0.00		$0.00	
$0.00		$0.00	
$0.00		$0.00	
$0.00		$0.00	
$0.00		$0.00	
$0.00		$0.00	
$0.00		$0.00	
$0.00		$0.00	
$0.00		$0.00	
$0.00		$0.00	
$0.00		$0.00	
$0.00		$0.00	
$0.00		$0.00	
$0.00		$0.00	
$0.00		$0.00	
ELLIPTICAL PIPE - RCP CLASS III			
$0.00		$0.00	
$0.00		$0.00	
$0.00		$0.00	
$0.00		$0.00	

$0.00		$0.00	
$0.00		$0.00	
$0.00		$0.00	
$0.00		$0.00	
$0.00		$0.00	
$0.00		$0.00	
$0.00		$0.00	
$0.00		$0.00	
$0.00		$0.00	
$0.00		$0.00	
$0.00		$0.00	
$0.00		$0.00	
$0.00		$0.00	
$0.00		$0.00	
$0.00		$0.00	
$0.00		$0.00	
$0.00		$0.00	
$0.00		$0.00	
HDPE PIPE			
$0.00		$0.00	
$0.00		$0.00	
$0.00		$0.00	
$0.00		$0.00	
$33,003.32		$0.00	
$0.00		$0.00	
$7,888.77		$0.00	
$0.00		$0.00	
$45,090.80		$0.00	
$5,730.69		$0.00	
$143,094.78		$0.00	
$0.00		$0.00	
$0.00		$0.00	
$0.00		$0.00	

$0.00		$0.00	
$0.00		$0.00	
$0.00		$0.00	
$0.00		$0.00	
STORM STRUCTURES			
$0.00		$0.00	
$0.00		$0.00	
$1,805.14		$0.00	
$0.00		$0.00	
$0.00		$0.00	
$8,023.20		$0.00	
$0.00		$0.00	
$0.00		$0.00	
$0.00		$0.00	
$0.00		$0.00	
$0.00		$0.00	
$0.00		$0.00	
$0.00		$0.00	
$0.00		$0.00	
$0.00		$0.00	
$0.00		$0.00	
$0.00		$0.00	
$0.00		$0.00	
$0.00		$0.00	
$0.00		$0.00	
$0.00		$0.00	
$0.00		$0.00	
$0.00		$0.00	
$0.00		$0.00	
$0.00		$0.00	
$0.00		$0.00	
$0.00		$0.00	
$0.00		$0.00	
$0.00		$0.00	
$0.00		$0.00	
$0.00		$0.00	
$0.00		$0.00	

$0.00		$0.00	
$0.00		$0.00	
$0.00		$0.00	
$0.00		$0.00	
$0.00		$0.00	
$0.00		$0.00	
$0.00		$0.00	
$0.00		$0.00	
$0.00		$0.00	
$0.00		$0.00	
$0.00		$0.00	
$0.00		$0.00	
$0.00		$0.00	
$0.00		$0.00	
$0.00		$0.00	
$0.00		$0.00	
MANHOLES			
$0.00		$0.00	
$0.00		$0.00	
$10,674.00		$0.00	
$0.00		$0.00	
$0.00		$0.00	
Drop Inlets			
$15,380.00		$0.00	
$0.00		$0.00	
$0.00		$0.00	
$0.00		$0.00	
Curb Drop Inlets			
$0.00		$0.00	
$0.00		$0.00	
$0.00		$0.00	
$17,068.48		$0.00	

$46,938.30		$0.00	
$10,326.43		$0.00	
$0.00		$0.00	
$12,494.98		$0.00	
$0.00		$0.00	
$7,680.82		$0.00	
$16,897.80		$0.00	
$18,587.58		$0.00	
$10,223.17		$0.00	
$0.00		$0.00	
$0.00		$0.00	
$0.00		$0.00	
$0.00		$0.00	
$15,850.14		$0.00	
$0.00		$0.00	
$0.00		$0.00	
$0.00		$0.00	
$0.00		$0.00	
$0.00		$0.00	
$0.00		$0.00	
$0.00		$0.00	
$0.00		$0.00	
$0.00		$0.00	
$0.00		$0.00	
$0.00		$0.00	
$0.00		$0.00	
$0.00		$0.00	
$0.00		$0.00	
$0.00		$0.00	
$0.00		$0.00	
$0.00		$0.00	
$0.00		$0.00	
$0.00		$0.00	
$0.00		$0.00	
$0.00		$0.00	
$0.00		$0.00	
$0.00		$0.00	
$0.00		$0.00	

$0.00		$0.00	
$0.00		$0.00	
$0.00		$0.00	
$0.00		$0.00	
$0.00		$0.00	
$0.00		$0.00	
$0.00		$0.00	
$0.00		$0.00	
$0.00		$0.00	
$0.00		$0.00	
$0.00		$0.00	
$0.00		$0.00	
$0.00		$0.00	
$0.00		$0.00	
$0.00		$0.00	
$0.00		$0.00	
$0.00		$0.00	
$0.00		$0.00	
$0.00		$0.00	
$0.00		$0.00	
$0.00		$0.00	
$0.00		$0.00	
$0.00		$0.00	
$0.00		$0.00	
$0.00		$0.00	
$0.00		$0.00	
$0.00		$0.00	
$0.00		$0.00	
$0.00		$0.00	
$0.00		$0.00	
$0.00		$0.00	
$0.00		$0.00	
$0.00		$0.00	
$0.00		$0.00	
$0.00		$0.00	
$0.00		$0.00	
$0.00		$0.00	
$0.00		$0.00	

$0.00		$0.00	
$0.00		$0.00	
$0.00		$0.00	
$0.00		$0.00	
$0.00		$0.00	
$0.00		$0.00	

$0.00		$0.00	
$0.00		$0.00	
$0.00		$0.00	
$0.00		$0.00	
$0.00		$0.00	

Culverts

$0.00		$0.00	
$0.00		$0.00	
$0.00		$0.00	
$0.00		$0.00	
$0.00		$0.00	
$0.00		$0.00	
$0.00		$0.00	
$0.00		$0.00	
$0.00		$0.00	
$0.00		$0.00	
$0.00		$0.00	
$0.00		$0.00	
$0.00		$0.00	
$0.00		$0.00	
$0.00		$0.00	
$0.00		$0.00	
$0.00		$0.00	
$0.00		$0.00	
$0.00		$0.00	
$0.00		$0.00	
$0.00		$0.00	
$0.00		$0.00	
$0.00		$0.00	

$0.00		$0.00	
$0.00		$0.00	
$0.00		$0.00	
$0.00		$0.00	
$0.00		$0.00	
$0.00		$0.00	
MISCELLANEOUS STORM			
$0.00		$0.00	
$0.00		$0.00	
$0.00		$0.00	
$0.00		$0.00	
$0.00		$0.00	
$0.00		$0.00	
$0.00		$0.00	
$0.00		$0.00	
$0.00		$0.00	
$3,826.94		$0.00	
$0.00		$0.00	
$0.00		$0.00	
$0.00		$0.00	
$0.00		$0.00	
$0.00		$0.00	
$0.00		$0.00	
$0.00		$0.00	
$0.00		$0.00	
$0.00		$0.00	
$0.00		$0.00	
$0.00		$0.00	
STREET CONSTRUCTION			
$0.00		$0.00	
		$0.00	
$0.00		$0.00	
		$0.00	

$870,240.00		$0.00	
		$0.00	
$176,400.00		$0.00	
		$0.00	
$0.00		$0.00	
		$0.00	
$117,600.00		$0.00	
		$0.00	
$0.00		$0.00	
$0.00		$0.00	
$0.00		$0.00	
$0.00		$0.00	
$36,300.00		$0.00	
$147,262.50		$0.00	
$6,264.00		$0.00	
$0.00		$0.00	
$0.00		$0.00	
$0.00		$0.00	
$0.00		$0.00	
$0.00		$0.00	
$0.00		$0.00	
$0.00		$0.00	
$0.00		$0.00	
$0.00		$0.00	
$0.00		$0.00	
$0.00		$0.00	
$0.00		$0.00	
$0.00		$0.00	
$0.00		$0.00	
$0.00		$0.00	
$0.00		$0.00	
$700.00		$0.00	
$0.00		$0.00	
$0.00		$0.00	
$2,378.00		$0.00	
$2,560.00		$0.00	
$130,636.00		$0.00	

SIDEWALKS AND TRAILS

$0.00		$0.00	
$0.00		$0.00	
$0.00		$0.00	
HANDRAIL			
$0.00		$0.00	
$0.00		$0.00	
$0.00		$0.00	
10934		$0.00	
CRITICAL SLOPE STABILIZATION			
$0.00		$0.00	
$0.00		$0.00	
$0.00		$0.00	
$0.00		$0.00	
$0.00		$0.00	
$0.00		$0.00	
$0.00		$0.00	
$0.00		$0.00	
$0.00		$0.00	
$0.00		$0.00	
$0.00		$0.00	
$0.00		$0.00	
$0.00		$0.00	
$0.00		$0.00	
$0.00		$0.00	
$0.00		$0.00	
SPECIAL ITEMS			
$0.00		$0.00	
$12,967.50		$0.00	
$0.00		$0.00	
$0.00		$0.00	

12	EFFECTIVE PERIOD OF BOND (IN MONTHS)
$2,463,663.90	TOTAL BOND REDUCTION REQUEST
$246,366.39	+ 10% CONTINGENCY
$2,710,030.28	GRAND TOTAL
$2,818,431.50	FINAL BOND REDUCTION REQUEST (+4% ANNUAL INTEREST)

N			City Use Only
TOTAL QUANTITY COMPLETED (INCLUDING REDUCTION REQUEST)	EXTENSION	%COMPLETE	%APPROVED
0		0%	
0		0%	
0		0%	
0		0%	
0		0%	
0		0%	
0		0%	
0		0%	
0		0%	
0		0%	
0		0%	
0		0%	
0		0%	
0		0%	
0		0%	
0		0%	
0		0%	
0		0%	
0		0%	
0		0%	
0		0%	
0		0%	
0		0%	
0		0%	
0		0%	

0		0%	
0		0%	
0		0%	
0		0%	
0		0%	
0		0%	
0		0%	
0		0%	
0		0%	
0		0%	
0		0%	
0		0%	
0		0%	
0		0%	
0		0%	
0		0%	
0		0%	
0		0%	
0		0%	
0		0%	
0		0%	
0		0%	
0		0%	
0		0%	
0		0%	
0		0%	
0		0%	
0		0%	
0		0%	
0		0%	
0		0%	

0		0%	
0		0%	
0		0%	
0		0%	
0		0%	
0		0%	
0		0%	
0		0%	
0		0%	
0		0%	
0		0%	
0		0%	
0		0%	
0		0%	
0		0%	
0		0%	
0		0%	
0		0%	
0		0%	
0		0%	
0		0%	
0		0%	
0		0%	
0		0%	
0		0%	
0		0%	
0		0%	
0		0%	
0		0%	
0		0%	
0		0%	
0		0%	
0		0%	
0		0%	
0		0%	
0		0%	
0		0%	

0		0%	
0		0%	
0		0%	
0		0%	
0		0%	
0		0%	
0		0%	
0		0%	
0		0%	
0		0%	
0		0%	
0		0%	
0		0%	
0		0%	
0		0%	
0		0%	
0		0%	
0		0%	
0		0%	
0		0%	
0		0%	
0		0%	
0		0%	
0		0%	
0		0%	
0		0%	
0		0%	
0		0%	
0		0%	
0		0%	
0		0%	
0		0%	
0		0%	
0		0%	

0		0%	
0		0%	
0		0%	
0		0%	
0		0%	
0		0%	
0		0%	
0		0%	
0		0%	
0		0%	
0		0%	
0		0%	
0		0%	
0		0%	
0		0%	
0		0%	
0		0%	
0		0%	
0		0%	
0		0%	
0		0%	
0		0%	
0		0%	
0		0%	
0		0%	
0		0%	
0		0%	
0		0%	
0		0%	
0		0%	
0		0%	

0		0%	
0		0%	
0		0%	
0		0%	
0		0%	
0		0%	
0		0%	
0		0%	
0		0%	
0		0%	
0		0%	
0		0%	
0		0%	
0		0%	
0		0%	
0		0%	
0		0%	
0		0%	
0		0%	
0		0%	
0		0%	
0		0%	
0		0%	
0		0%	
0		0%	
0		0%	
0		0%	
0		0%	
0		0%	

0		0%	
0		0%	
0		0%	
0		0%	
0		0%	
0		0%	
0		0%	
0		0%	
0		0%	
0		0%	
0		0%	
0		0%	
0		0%	
0		0%	
0		0%	
0		0%	
0		0%	
0		0%	
0		0%	
0		0%	
0		0%	
0		0%	
0		0%	
0		0%	
0		0%	
0		0%	
0		0%	
0		0%	
0		0%	
0		0%	
0		0%	
0		0%	
0		0%	
0		0%	
0		0%	
0		0%	
0		0%	
0		0%	

0		0%	
0		0%	
0		0%	
0		0%	
0		0%	
0		0%	
0		0%	
0		0%	
0		0%	
0		0%	
0		0%	
0		0%	
0		0%	
0		0%	
0		0%	
0		0%	
0		0%	
0		0%	
0		0%	
0		0%	
0		0%	
0		0%	
0		0%	
0		0%	
0		0%	
0		0%	
0		0%	
0		0%	
0		0%	
0		0%	
0		0%	
0		0%	
0		0%	
0		0%	
0		0%	
0		0%	
0		0%	
0		0%	

0		0%	
0		0%	
0		0%	
0		0%	
0		0%	
0		0%	
0		0%	
0		0%	
0		0%	
0		0%	
0		0%	
0		0%	
0		0%	
0		0%	
0		0%	
0		0%	
0		0%	
0		0%	
0		0%	
0		0%	
0		0%	
0		0%	
0		0%	
0		0%	
0		0%	
0		0%	
0		0%	
0		0%	
0		0%	
0		0%	

0		0%	
0		0%	
0		0%	
0		0%	
0		0%	
0		0%	
0		0%	
0		0%	
0		0%	
0		0%	
0		0%	
0		0%	
0		0%	
0		0%	
0		0%	
0		0%	
0		0%	
0		0%	
0		0%	
0		0%	
0		0%	
0		0%	
0		0%	
0		0%	
0		0%	
0		0%	
0		0%	
0		0%	

0		0%	
0		0%	
0		0%	
0		0%	
0		0%	
0		0%	
0		0%	
0		0%	
0		0%	
0		0%	
0		0%	
0		0%	
0		0%	
0		0%	
0		0%	
0		0%	
0		0%	
0		0%	
0		0%	
0		0%	
0		0%	
0		0%	
0		0%	
0		0%	
0		0%	
0		0%	

0		0%	
0		0%	
0		0%	
0		0%	
0		0%	
0		0%	
0		0%	
0		0%	
0		0%	
0		0%	
0		0%	
0		0%	
0		0%	
0		0%	
0		0%	
0		0%	
0		0%	
0		0%	
0		0%	
0		0%	
0		0%	
0		0%	
0		0%	
0		0%	
0		0%	
0		0%	
0		0%	
0		0%	
0		0%	
0		0%	
0		0%	
0		0%	
0		0%	

0		0%	
0		0%	
0		0%	
0		0%	
0		0%	
0		0%	
0		0%	
0		0%	
0		0%	
0		0%	
0		0%	
0		0%	
0		0%	
0		0%	
0		0%	
0		0%	
0		0%	
0		0%	
0		0%	
0		0%	
0		0%	
0		0%	
0		0%	
0		0%	
0		0%	
0		0%	
0		0%	

$0.00
$0.00
$0.00
$0.00

TOTAL ESTIMATED - BOND REMAINING	$2,818,431.50

Kimley»Horn

Memorandum

To: Mark Flynn
Arcadia Land, Inc.
108 N. George Street, 2nd Floor
Charles Town, WV 25414

From: Mark Phillips, P.E.

Through: Mr. James Newman, AICP
City of Charles Town
101 E Washington Street
Charles Town, WV 25414

Date: April 14, 2025

Subject: Norborne Glebe Phases 11, 12, and 13 Bond Initiation Review

This memorandum summarizes our review of the Bond Initiation request for the Norborne Glebe Subdivision Phases 11, 12, and 13 Bond Initiation Application (dated March 31, 2025, prepared by Greenway Engineering). Using the Final Subdivision Plans and Comment Response Letters provided by the Applicant we have no further comments.

Kimley-Horn finds the Bond Initiation requests to be in conformance with the Plans and recommends approval of the initiation requests.

Thank you for the opportunity to review this Bond Initiation request. In the meantime, please feel free to contact us at 703-870-3631 should you have any questions.

KIMLEY-HORN & ASSOCIATES, INC.

Mark Phillips, P.E.
Project Manager
Associate

City Council
101 East Washington Street
Charles Town, WV 25414

Meeting: 05/05/25
Department: City Council
Category: Report
Initiator:

SCHEDULED

AGENDA ITEM (ID #)

2025-514: BR2025-05: Norborne Glebe Phase 13 - Bond Initiation

Proposed Motion: Approve the performance bond in the amount of $3,008,819.37 for the Norborne Glebe housing development Phase 12.

ATTACHMENTS:

- 1. Staff Report.pdf
- 2. Application.pdf
- 3. Bond estimate.xlsx
- 4. KH Review.pdf

Bond Initiation Request
BR2025-04

Date: For the May 5, 2025 City Council meeting
Applicant: Arcadia Land Inc.
Report by: James Newman, City Planner, Zoning/Subdivision Administrator.
Proposal: A bond initiation in the amount of $3,008,819.37

Norborne Glebe Phase 13

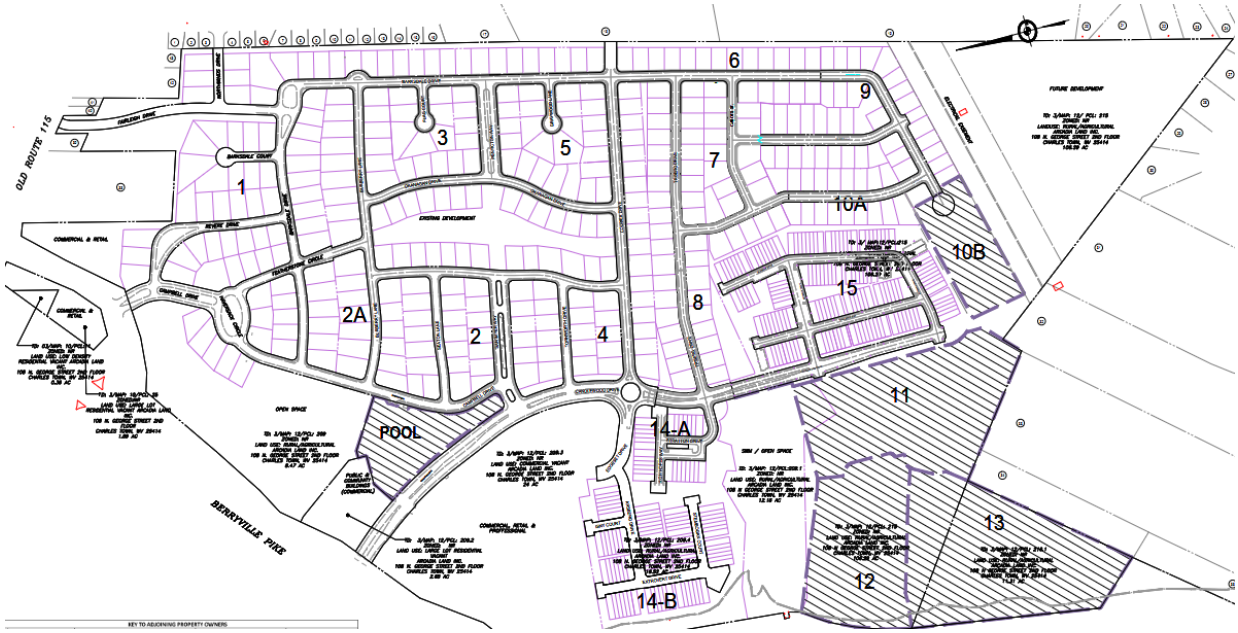

BACKGROUND

The applicant, Arcadia Land Inc., has submitted a bond initiation request for the Norborne Glebe housing development Phase 13. The applicant is requesting a bond initiation in the amount of $3,008,819.37. This amount will cover performance bond issues (road paving, street lights, etc.).

A land disturbance bond was previously approved by Council on April 16, 2024 in the amount of $1,635,228.03 to cover phases 10B, 1, 12, and 13.

Bonds shall be required for public and other physical Improvements to be constructed under an approved Final S/LD Application. Such Improvements shall include, without limitation, Road, curb, gutter, sidewalk, trails, storm Drainage, traffic signalization and control, water and sanitary sewer infrastructure, and any other site-related Improvements required by the City of Charles Town for vehicular and pedestrian ingress and egress, for public access roadways, for Structures necessary to insure stability of critical slopes, for necessary utilities, and for Stormwater Management Facilities.

BOND COMMITTEE

At their April1 4, 2025 meeting, the City's Bond Committee discussed the application and recommend approval of the proposed initiation.

PLANNING COMMISSION

The Planning Commission considered this item at their April 28, 2025 meeting. Following discussion the Commission unanimously voted to recommend approval of the request.

RECOMMENDATION

Approval.

Norborne Glebe - Phase 13
Performance Bond

BOND REQUEST AND REDUCTION

1. APPLICATION TYPE :

☑ Bond Initiation – No application fee

☐ Bond Reduction – No application fee

☐ Bond Release – Application Fee: $85

2. FEES

Third-party review fees are assessed separately for each application, and will be sent to the applicant. All fees must be paid prior to approval.

3. PUBLIC NOTICE

Only bond release applications require a public hearing.

4. APPLICATION REQUIREMENTS

Please submit one application set with supporting materials in paper, and one copy in PDF format.

1. DATE January 28, 2025

2. PROJECT NAME Norborne Glebe Subdivision - Phase 13

Address N/A

3. APPLICANT'S NAME* Arcadia Land, Inc. Attn: Gary Endler

Address 108 N. George Street - 2nd Floor Charles Town, WV 25414

Telephone Number (703) 771-8000

Email Address gendler@arcadiacompanies.com

4. PROPERTY OWNER'S NAME Arcadia Land, Inc, Attn: Gary Endler

Address 108 N George Street - 2nd Floor Charles Town, WV 25414

Telephone Number (703) 771-8000

Email Address gendler@arcadiacompanies.com

*Applicants include: Property owner(s), Engineer(s), Surveyor(s), or Consultant(s)

5. DESCRIPTION OF REQUEST:

Requesting Bond Amount Establishment for the Performance Bond for Phase 11, Norborne Glebe Subdivision

6. A) CURRENT BOND AMOUNT $0

B) PROPOSED BOND AMOUNT $3,008,819.37

C) CHANGE IN BONDED AMOUNT $

7. PARCEL INVENTORY: (List all parcels that are part of this application):

Tax Map No.	Parcel No.	Tax Map No.	Parcel No.
3-12	215	3-12	216.1

8. PARCEL HISTORY: (List all pending or previously approved applications on the subject parcels inventoried above, including previous plat applications if this application is an amendment)

Application No.	Project Name and Phase	Status	Approval Date
SLD-2013-04	Norborne Glebe Phase 5	Approved	01/14/2014
SLD-2017-05	Norborne Glebe Phase 7-8	Approved	09/25/2018
SLD-2016-01	Norborne Glebe Phase 6	Approved	09/25/2018
SLD-2017-14	Norborne Glebe Phase 14A	Approved	09/25/2018
SLD-2021-02	Norborne Glebe Phase 14B	Approved	02/28/2022
SLD-2021-05	Norborne Glebe Phase 9&10A	Approved	10/13/2022
SLD-2022-03	Norborne Glebe Phase 15	Approved	03/27/2023
SP-2022-06	Norborne Glebe Pool	Approved	07/28/2023
SLD-2022-06	Norborne Glebe Phase 10B-13	Approved	02/27/2024

9. <u>BOND RELEASE</u> – SUPPLEMENTAL MATERIALS REQUIRED:

A. Copies of inspection and test reports if work was inspected and tested by a third-party inspector.

B. Certification that all bonded Improvements, have been completed in accordance with the approved plans, profiles, and specifications and the requirements of any applicable manual.

C. A copy of the City-approved As-Built Drawings as required for facilities within public rights-of-way or Easements.

D. A letter from a Professional Engineer or Professional Land Surveyor certifying that property corners and Monuments have been set as required under this Ordinance.

Continued on next page.

E. Documentation of acceptance by WVDOH for public roadways and rights-of-way, or a maintenance and indemnification agreement and bond approved by the Planning Commission for public roadways that have been completed in accordance with WVDOH standards but which, due to factors other than their quality of construction, are not eligible for acceptance by WVDOH.

F. **For private roadways**, a letter of acceptance by the entity responsible for maintenance and a Latent Defects Indemnification Agreement and Bond.

   Before a Performance Agreement and surety for private roadway construction shall be released, a Latent Defects Indemnification Agreement and Bond shall be provided by the applicant/Developer and approved by the Planning Commission. The guarantee provided by such Agreement and Bond must be for a period of two (2) years following the date of performance bond release, and must be in an amount equal to no less than 5% of the original performance bond estimate.

G. **Landscaping Surety** is required to ensure the landscaping shown on a Major S/LD plan is maintained for one (1) year. The one (1) year shall start from the date at which the surety for the site has been released, with the exception of this landscaping surety. The landscaping surety amount shall not be less than $5,000.00 or 10% of the total landscaping cost for the project, which ever is greater.

APPLICANT CERTIFICATION

I certify that, to the best of my knowledge, the submitted information and statements are true and correct. I also certify that I have received and read Article 1335 of the S/LD Ordinance.

Signature of Applicant _____ Date 2/7/2025

Signature of Property Owner (If different than Applicant)

_____ Date _____

Please submit an original completed application to the following:

At City Hall:	Or	Via Mail:
Subdivision Administrator City of Charles Town 101 E. Washington Street Charles Town, WV 25414		Subdivision Administrator City of Charles Town PO BOX 14 Charles Town, WV 25414

FOR CITY USE ONLY

Application Number:_____ Date Application Received:_____

Fee: $_____ Check No._____

Receipt No._____

Site Inspection Date:_____ Inspector:_____

Planning Commission Approval:_____ Date:_____

City Council Approval:_____ Date:_____

Comments:_____

_____

_____

_____

_____

BOND ESTIMATE			
ITEM	UNIT	UNIT COST	QUANTITY
Mobilization	LS	$12,440.00	1
Field Office	EA	$3,490.00	
Job Sign	EA	$1,340.00	
Steel Pipe Property Corner Marker Incl. Survey	EA	$320.38	138
RM--1		$825.00	
RM--2		$764.00	
Regular Bulk used as Fill	CY	$4.50	
Rock, Rip	CY	$51.50	
Rock, Blast	CY	$55.00	
Buy, Load, Haul 10 Mi. Select Material	CY	$42.00	
Fill and Compaction of On-site Borrow	CY	$44.00	
Load and Haul, 20 mi R/T	CY	$36.56	
Dump Charge	CY	$62.50	
Site Grading	SY	$1.25	
Light	AC	$14,548.50	16.4
Heavy	AC	$26,699.49	
Seeding	SY	$3.00	52301
Sodding	SY	$8.50	52301
18"	EA	$70.00	
24"	EA	$90.00	
6'-8' (1-2 in. Caliper)	EA	$400.00	114
8'-10' (2.5-3 in. Caliper)	EA	$700.00	
Tree Protection	LF	$11.13	
Timber Wall (less than 6 ft)	LF	$325.00	
Dry Rubble RW-1 (H=6')	LF	$450.00	

Mortared Rubble RW-1A (H=6')	LF	$535.00	
Concrete Gravity RW-2 (H=6')	LF	$589.50	
Concrete Gravity RW-3 (H=6')	LF	$1,037.50	
FENCING			
Std. Fence (H=5') FR-5	LF	$56.00	
Farm Fence (H=5') FR-3A	LF	$37.50	
Chain Link Fence (H=6') FR 2-B	LF	$62.00	
Board Fence (H=6')	LF	$62.00	
TOTS LOTS			
Tot Lot	EA	$16,495.00	
STORM SEWER			
NOTE: All pipe unit prices include trench, excavation, bedding, pipe, & backfill			
Rock Excavation for All Pipe Types			
Less than 1,500 CY (Blasting)	CY	$110.00	
More than 1,500 CY (Blasting)	CY	$90.00	
Less than 1,500 CY (Hoe Ram)	CY	$220.00	
More than 1,500 CY (Hoe Ram)	CY	$180.00	
Trench De-Watering			
Trench De-Watering	LF	$4.00	
12" Pipe (RCP III)			
0'-8' Cut	LF	$100.00	
8'-14' Cut	LF	$140.00	
Add cost for Class IV	LF	$1.90	
O-Ring	LF	$12.36	
15" Pipe (RCP III)			
0'-10' Cut	LF	$100.00	
10'-16'	LF	$156.00	
Add Cost for Class IV	LF	$1.48	
O-Ring	LF	$8.58	
18" Pipe (RCP III)			
0'-10' Cut	LF	$100.00	
10' -16' Cut	LF	$160.00	
Add Cost for Class IV	LF	$3.20	
O-Ring	LF	$11.20	
21" Pipe (RCP III)			
0'-8' Cut	LF	$115.00	
8'-14' Cut	LF	$174.80	
Add cost for Class IV	LF	$4.40	
O-Ring	LF	$20.80	
24" Pipe (RCP III)			
0'- 10' Cut	LF	$140.00	
10'-16'	LF	$196.00	
Add Cost for Class IV	LF	$5.04	

O-Ring	LF	$22.40	
27" Pipe (RCP III)			
0'- 10' Cut	LF	$123.20	
10' -16' Cut	LF	$195.03	
Add Cost for Class IV	LF	$6.40	
O-Ring	LF	$24.00	
30" Pipe (RCP III)			
0'- 8' Cut	LF	$169.40	
8'-14' Cut	LF	$256.66	
Add cost for Class IV	LF	$9.60	
O-Ring	LF	$27.60	
33" Pipe (RCP III)			
0'- 10' Cut	LF	$240.00	
10'-16'	LF	$333.00	
Add Cost for Class IV	LF	$13.50	
O-Ring	LF	$45.80	
36" Pipe (RCP III)			
0'-10' Cut	LF	$249.60	
10' -16' Cut	LF	$363.92	
Add Cost for Class IV	LF	$12.40	
O-Ring	LF	$36.40	
42" Pipe (RCP III)			
0'- 8' Cut	LF	$289.54	
8'-14' Cut	LF	$413.46	
Add cost for Class IV	LF	$19.20	
O-Ring	LF	$56.72	
48" Pipe (RCP III)			
0'-10' Cut	LF	$320.52	
10'-16'	LF	$442.31	
Add Cost for Class IV	LF	$20.00	
O-Ring	LF	$69.36	
54" Pipe (RCP III)			
0' - 10' Cut	LF	$420.00	
10' -16' Cut	LF	$541.38	
Add Cost for Class IV	LF	$30.00	
O-Ring	LF	$70.96	
60" Pipe (RCP III)			
0'-10' Cut	LF	$420.00	
10' -16' Cut	LF	$498.48	
Add Cost for Class IV	LF	$36.00	
O-Ring	LF	$77.84	
23"x14" (18" Equiv- RCP III)			
0'10' Cut	LF	$190.00	
10'-16' Cut	LF	$278.60	
Add cost for Class IV	LF	$41.60	
O-Ring	LF	$109.80	

30"x19" (24" Equiv- RCP III			
0'10' Cut	LF	$190.00	
10'-16' Cut	LF	$329.25	
Add cost for Class IV	LF	$15.07	
O-Ring	LF	$109.79	
38"x24" (30" Equiv- RCP III			
0'10' Cut	LF	$190.00	
10'-16' Cut	LF	$423.78	
Add cost for Class IV	LF	$21.38	
O-Ring	LF	$129.92	
45"x29" (36" Equiv- RCP III)			
0'10' Cut	LF	$370.00	
10'-16' Cut	LF	$526.88	
Add cost for Class IV	LF	$25.45	
O-Ring	LF	$119.63	
1			
0'12' Cut	LF	$370.00	
10'-18' Cut	LF	$528.36	
Add cost for Class IV	LF	$38.87	
O-Ring	LF	$149.26	
60"x38" (48" Equiv- RCP III)			
0'12' Cut	LF	$370.00	
10'-18' Cut	LF	$543.90	
Add cost for Class IV	LF	$46.46	
O-Ring	LF	$177.11	
8" Pipe			
0'-8' Cut	LF	$50.00	
8'-14' Cut	LF	$75.30	
12" Pipe			
0'-8' Cut	LF	$67.50	
8'-14' Cut	LF	$100.04	
15" Pipe			
0'-8' Cut	LF	$87.08	1602
8'-16' Cut	LF	$129.65	
18" Pipe			
0'-8' Cut	LF	$114.33	181
8'-16' Cut	LF	$170.69	
24" Pipe			
0'-8' Cut	LF	$132.62	
8'-16' Cut	LF	$197.61	
30" Pipe			
0'-8' Cut	LF	$157.42	
8'-16' Cut	LF	$236.13	
36" Pipe			
0'-8' Cut	LF	$200.00	
8'-16' Cut	LF	$298.00	

42" Pipe			
0'-8' Cut	LF	$224.20	
8'-16' Cut	LF	$334.06	
48" Pipe			
0'-8' Cut	LF	$253.35	
8'-16' Cut	LF	$377.49	
END SECTIONS			
End Sections (ES-1), Concrete Pipe Size			
15"	EA	$1,389.00	1
18"	EA	$1,583.46	1
21"	EA	$1,805.14	
24"	EA	$2,057.86	
27"	EA	$2,345.97	
30"	EA	$2,674.40	
36"	EA	$3,048.82	
42"	EA	$3,558.50	
48"	EA	$4,056.69	
54"	EA	$4,624.63	
60"	EA	$5,272.07	
ENDWALLS			
EW-1 (Pre-Cast) Round Pipe Size			
15"	EA	$2,433.00	
18"	EA	$2,724.96	
24"	EA	$3,051.96	
30"	EA	$3,418.19	
36"	EA	$3,828.37	
EW-1 Cast in Place [Round Pipe Size]			
15"	EA	$2,591.15	
18"	EA	$2,902.08	
24"	EA	$3,250.33	
30"	EA	$3,640.37	
36"	EA	$4,077.22	
EW-1A (Pre-Cast) Elliptical Pipe Size			
23" X 14" (18")	EA	$1,335.00	
30" X 19" (24")	EA	$1,495.20	
38 X 24" (30")	EA	$1,879.50	
45 X 29" (36")	EA	$2,105.04	
53" X 34" (42")	EA	$2,791.50	
EW-1A (Cast in Place)Elliptical Pipe Size			
23" X 14" (18")	EA	$1,318.50	
30" X 19" (24")	EA	$1,318.50	
38 X 24" (30")	EA	$2,257.00	
45 X 29" (36")	EA	$2,257.00	
53" X 34" (42")	EA	$3,217.50	
EW-2 (PreCast) Round Size Pipe Size			
42"	EA	$8,324.00	

48"	EA	$9,322.88	
54"	EA	$10,441.63	
60"	EA	$11,694.62	
72"	EA	$12,675.50	
84"	EA	$14,196.56	
EW-2 (Cast in Place) Round Size Pipe Size			
42"	EA	$9,255.50	
48"	EA	$10,366.16	
54"	EA	$11,610.10	
60"	EA	$13,003.31	
72"	EA	$15,747.00	
84"	EA	$17,636.64	
EW-6PC [Double Pipe] Pipe Size			
2-15"	EA	$2,123.00	
2-18"	EA	$2,377.76	
2-24"	EA	$2,663.09	
2-30"	EA	$4,096.00	
2-36"	EA	$4,587.52	
Standard Brick Manhole Std Frame & Cover (MH-1)			
6' Depth	EA	$6,048.00	
Depth Below 6'	VF	$230.00	
Standard Precast Manhole Std Frame & Cover (MH-2)		$5,337.00	2
Additional Cost (Amount in parentheses to be added to the above unit costs)			
Watertight Fr/Cover (Add 110)	EA	$579.00	
Heavy Duty Fr/ Cover (Add 82)	VF	$599.00	
Cast in Place 48"			
Drop Inlet (DI-1) 12"-24" Pipe0-10 VF	EA	$7,690.00	2
Drop Inlet (DI-1A) 12"-24" Pipe10-20 VF	EA	$7,690.00	
Drop Inlet (DI-2A) 12"-24" Pipe0-10 VF, 10' throat	EA	$9,458.70	
Drop Inlet (DI-2A) 12"-24" Pipe10-20 VF, 10' throat	EA	$11,634.20	
Curb Drop Inlet (DI-3A)			
12"-30" Pipe (Invert Depth (H) =0'-8') Inlet Length 2'-6"	EA	$7,460.00	
Curb Drop Inlet (DI-3AA)			
12"-30" Pipe (Invert Depth (H) =8'-	EA	$9,772.60	
Curb Drop Inlet (DI-3B) 12"-30" Pipe (Invert Depth (H) = 0 '-8') Inlet Length			
4'	EA	$7,758.40	
6'	EA	$8,534.24	2

8'	EA	$9,387.66	5
10'	EA	$10,326.43	4
12'	EA	$11,359.07	1
16'	EA	$12,494.98	
20'	EA	$13,744.48	
Curb Drop Inlet (DI-3BB) 12"-30" Pipe (Invert Depth (H) = 0 '-8') Inlet Length			
4'	EA	$7,680.82	
6'	EA	$8,448.90	
8'	EA	$9,293.79	
10'	EA	$10,223.17	
12'	EA	$11,245.48	
16'	EA	$12,370.03	
20'	EA	$13,607.03	
Curb Drop Inlet (DI-3C) 12"-30" Pipe (Invert Depth (H) = 0 '-8') Inlet Length			
6'	EA	$7,204.61	
8'	EA	$7,925.07	
10'	EA	$8,717.57	2
12'	EA	$9,589.33	
16'	EA	$10,548.26	
20'	EA	$11,603.09	
Curb Drop Inlet (DI-3CC) 12"-30" Pipe (Invert Depth (H) = 0 '-8') Inlet Length			
6'	EA	$8,573.48	
8'	EA	$9,430.83	
10'	EA	$10,373.91	
12'	EA	$11,411.30	
16'	EA	$12,552.43	
20'	EA	$13,807.68	
Curb Drop Inlet (DI-3D)			
12"-30" Pipe (Invert Depth (H) =0'-8') Inlet Length 2'-6"	EA	$6,430.11	
Curb Drop Inlet (DI-3DD)			
12"-30" Pipe (Invert Depth	EA	$7,587.53	
Curb Drop Inlet (DI-3E) 12"-30" Pipe (Invert Depth (H) = 0 '-8') Inlet Length			
4'	EA	$7,460.00	
8'	EA	$7,982.20	
10'	EA	$8,540.95	
12'	EA	$9,138.82	
16'	EA	$9,778.54	
20'	EA	$10,463.04	
Curb Drop Inlet (DI-3EE) 12"-30" Pipe (Invert Depth (H) = 8'-20') Inlet Length			
6'	EA	$11,509.34	
8'	EA	$12,314.99	
10'	EA	$13,177.04	
12'	EA	$14,099.44	
16'	EA	$15,086.40	
20'	EA	$16,142.44	
Curb Drop Inlet (DI-3F) 12"-30" Pipe (Invert Depth (H) = 0 '-8') Inlet Length			

6'	EA	$6,855.74	
8'	EA	$7,335.64	
10'	EA	$7,849.14	
12'	EA	$8,398.58	
16'	EA	$8,986.48	
20'	EA	$9,615.53	
Curb Drop Inlet (DI-3FF) 12"-30" Pipe (Invert Depth (H) = 8'-20') Inlet Length			
6'	EA	$14,671.28	
8'	EA	$15,698.27	
10'	EA	$16,797.15	
12'	EA	$17,972.95	
16'	EA	$19,231.06	
20'	EA	$20,577.23	
Curb Drop Inlet (DI-4A) 36"-48" Pipe (Invert Depth (H) = 8'-20') Inlet Length			
4'	EA	$10,020.00	
Curb Drop Inlet (DI-4AA) 36"-48" Pipe (Invert Depth (H) = 8'-20') Inlet Length			
4'	EA	$10,020.00	
Curb Drop Inlet (DI-4B) 36"-48" Pipe (Invert Depth (H) = 0'-8') Inlet Length			
6'	EA	$8,802.77	
8'	EA	$9,418.96	
10'	EA	$10,078.29	
12'	EA	$10,783.77	
16'	EA	$11,538.64	
20'	EA	$12,346.34	
Curb Drop Inlet (DI-4BB) 36"-48" Pipe (Invert Depth (H) = 8'-20') Inlet Length			
6'	EA	$17,429.48	
8'	EA	$18,649.55	
10'	EA	$19,955.02	
12'	EA	$21,351.87	
16'	EA	$22,846.50	
20'	EA	$24,445.75	
Curb Drop Inlet (DI-4C) 36"-48" Pipe (Invert Depth (H) = 0'-8') Inlet Length			
8'	EA	$9,418.96	
10'	EA	$10,078.29	
12'	EA	$10,783.77	
16'	EA	$11,538.64	
20'	EA	$12,346.34	
Curb Drop Inlet (DI-4CC) 36"-48" Pipe (Invert Depth (H) = 8'-20') Inlet Length			
8'	EA	$22,417.13	
10'	EA	$23,986.33	
12'	EA	$25,665.38	
16'	EA	$27,461.95	
20'	EA	$29,384.29	
Curb Drop Inlet (DI-4D)			
36"-48" Pipe (Invert Depth (H) =8'16') Inlet Length 4'	EA	$8,279.27	
Curb Drop Inlet (DI-4DD)			

36"-48" Pipe (Invert Depth (H)	EA	$16,392.95	
Curb Drop Inlet (DI-4E) 36"-48" Pipe (Invert Depth (H) = 0'-8') Inlet Length			
6'	EA	$9,016.12	
8'	EA	$9,647.25	
10'	EA	$10,322.56	
12'	EA	$11,045.14	
16'	EA	$11,818.30	
20'	EA	$12,645.58	
Curb Drop Inlet (DI-4EE) 36"-48" Pipe (Invert Depth (H) = 8'-16') Inlet Length			
6'	EA	$15,688.06	
8'	EA	$16,786.22	
10'	EA	$17,961.26	
12'	EA	$19,218.54	
16'	EA	$20,563.84	
20'	EA	$22,003.31	
Curb Drop Inlet (DI-4F) 36"-48" Pipe (Invert Depth (H) = 0'-8') Inlet Length			
8'	EA	$10,040.36	
10'	EA	$10,743.18	
12'	EA	$11,495.20	
16'	EA	$12,299.87	
20'	EA	$13,160.86	
Curb Drop Inlet (DI-4FF) 36"-48" Pipe (Invert Depth (H) = 8'-16') Inlet Length			
8'	EA	$15,140.86	
10'	EA	$16,200.72	
12'	EA	$17,334.77	
16'	EA	$18,548.20	
20'	EA	$19,846.57	
Median Drop Inlets - CIP			
Median Drop Inlets (DI-6A) 12"-24"Pipe Inlet (H=8')	EA	$6,032.00	
Median Drop Inlets (DI-6B) 12"-24"Pipe Inlet (H=8')	EA	$6,080.00	
Median Drop Inlets (DI-6C) 30"-48"Pipe Inlet (H=10')	EA	$7,737.50	
Median Drop Inlets (DI-6D) 30"-48"Pipe Inlet (H=10')	EA	$7,805.00	
Median Drop Inlets (DI-7) Type III Top 12"-42" Pipe Inlet (H=10')	EA	$8,548.00	
Median Drop Inlets (DI-7A) Type III Top 12"-42" Pipe Inlet (H=10')	EA	$8,548.00	
Median Drop Inlets (DI-7B) Type III Top 12"-42" Pipe Inlet (H=10')	EA	$8,548.00	

Median Drop Inlets (DI-5) Type III Top 12"-42" Pipe Inlet (H=8')	EA	$6,569.08	
Standard Yard Inlet (YI-1) 12"-48" Pipe (Invert Depth (H)= 0'-8') Inlet Length 4' (No Aprons)		$5,969.49	
Add Yard Inlet Apron	THROAT	$320.54	
Standard Yard Inlet (YI-1) 12"-48" Pipe (Invert Depth (H)= 0'-8') Inlet Length 4' (No Aprons)	EA	$6,444.64	
Add Yard Inlet Apron	THROAT	$320.54	
Single Box Culvert (BC-1A) Fills to 25'			
4' X 4'	LF	$473.00	
5' X 5'	LF	$563.00	
6' X 6'	LF	$689.00	
8' X 8'	LF	$944.00	
10' X 10'	LF	$1,159.00	
Double Box Culvert (BC-2b) Fills to 25'			
4' X 4'	LF	$792.40	
5' X 5'	LF	$987.00	
6' X 6'	LF	$1,195.60	
8' X 8'	LF	$1,607.20	
10' X 10'	LF	$1,975.40	
Oversized Single Box Culvert (BBC-1) Fills to 25'			
12' X 6'	LF	$1,488.50	
12' X 8'	LF	$1,488.50	
12' X 10'	LF	$1,771.50	
12' X 12'	LF	$1,771.50	
Triple Box Culvert (BC-3B) Fills to 25'			
4' X 4'	LF	$1,129.55	
5' X 5'	LF	$1,399.25	
6' X 6'	LF	$1,755.95	
8' X 8'	LF	$2,367.85	
10' X 10'	LF	$3,607.60	
Quadruple Box Culvert (BC-4B) Fills to 25'			
4' X 4'	LF	$1,431.15	
5' X 5'	LF	$1,776.25	
6' X 6'	LF	$2,208.35	
8' X 8'	LF	$2,170.65	
10' X 10'	LF	$4,110.75	
Standard Wing for Box Culvert (1 Side Only) Height of Box			
4'	EA	$926.50	
5'	EA	$1,390.00	
6'	EA	$1,853.50	

8'	EA	$3,426.50	
10'	EA	$4,558.00	
Standard Wing for Box Culvert (BBC-W) Height of Box			
6'	EA	$1,817.00	
8'	EA	$3,007.50	
10'	EA	$4,497.50	
12'	EA	$6,567.00	
Connection to Existing Structure			
15"-36" Pipe	EA	$1,584.00	
42"-60" Pipe	EA	$1,584.00	
Casing Pipe, Bore and Jack (3/8" wall)			
22" ID (6"-8" Carrier Pipe)	LF	$885.71	
24" ID (10" Carrier Pipe)	LF	$971.91	
30" ID (12" Carrier Pipe)	LF	$1,226.20	
Plug Pipe			
6"-12" Pipe	EA	$444.50	
15"-36" Pipe	EA	$444.50	
42"-60" Pipe	EA	$574.50	
Pavement Edge Pipe			
Standard Pipe Underdrain	LF	$20.50	
RipRap			
Dry, Class I, 18"	SY	$82.00	23.33
Dry, Class II, 18"	SY	$82.00	
Grouted, Class I, 18"	SY	$84.00	
Filter Fabric			
Class I	SY	$4.13	
Class II	SY	$4.13	
Class III	SY	$4.13	
Gabions (No excavations)			
Mattress	CY	$237.50	
Revetment	CY	$237.50	
Wall	CY	$237.50	
Paved Ditch (4" Thick)			
Concrete (Non-reinforced)	SY	$94.50	
Bituminous Concrete (4")	SY	$43.50	
Sodded Ditch			
Sodded Ditch(Incl Fine Grading)	SY	$15.03	
ROADS AND PARKING			
Soil Stabilization			
Cement 6%	SY/ Inch	$20.00	
Depth (in Inches):	Depth		
Lime 6%	SY/ Inch	$14.00	
Depth (in Inches):	Depth		
Subbase, Aggregated Material			

Base Type I	SY/ Inch	$12.95	7309
Depth (in Inches):	Depth	8	
Bituminous Concrete			
Base Course	SY/ Inch	$7.00	7309
Depth (in Inches):	Depth	3	
Intermediate Course	SY/ Inch	$7.00	
Depth (in Inches):	Depth		
Top Course	SY/ Inch	$7.00	7309
Depth (in Inches):	Depth	$2.00	
Prime Coat	SY	$1.38	
Tack Coat	SY	$1.38	
Driveway Restoration			
4 Concrete & 4 Gravel	SY	$75.00	
2 S-5 & 7 6 Gravel	SY	$29.98	
Shoulders, Type I			
Aggregated Base, 4	SY	$15.00	2275
Concrete Curbing			
Curb & Gutter CG6 & CG7	LF	$31.50	4583
Curb Cut, CG-12 DetectableSurf.	EA	$1,044.00	4
Entrances/ Driveways			
Commercial Entrance CG-11	SY	$87.00	
Commercial Entrance CG-13	SY	$87.00	
Residential Driveway Apron	SY	$1,252.00	
Guardrails			
Std. Blocked-out W beam(GR2)	LF	$53.50	
Std. W beam, Weak Post GR8	LF	$53.50	
Terminal, GR-6 (L=12 -6)	EA	$3,880.50	
Terminal, GR-7 (L=6 -3)	EA	$3,880.50	
Type I, GR-8 Terminal (L=25)	EA	$3,580.50	
Type II, GR-8 Terminal(L=13 -6)	EA	$1,701.00	
Terminal, MB-4 (L=37 -6)	EA	$3,580.50	
Type I, MB-5 Terminal(L=27 -1)	EA	$3,580.50	
Type II, MB-5 Terminal(L=13 -6)	EA	$1,701.00	
Miscellaneous			
Trash enclosure - Brick 6' high	LF	$7,336.50	
Reinforced Concrete Pad 6" to 8"	SY	$150.00	
Striping 4" width (VDOT Type B)	LF	$2.50	
Concrete Wheel Stops	EA	$90.00	
Parking Lot Striping	EA	$50.00	
Sign Island	EA	$850.00	
Traffic Barricade	EA	$133.50	
Street Name Signs	EA	$594.50	2
Traffic Control Signs	EA	$512.00	2
Street Light (pole, bracket,light)	EA	$5,938.00	25

Sidewalk			
Concrete 4 w/WWF, No base	SY	$58.50	
Bitum. Conc, 2 w/4 Base	SY	$42.00	
4 Conc, No Reinf., No Base	SY	$58.50	
Handrail 3 Rail 1-1/4 #4 Finish	LF	$143.00	
Wood Chip Trail			
Trails(Incl Excavation &	SY	$77.00	
Grading) Wood chip, 4 wide	SY	$21.00	
Bituminous Trail			
6 to 10' wide	SY	$22.00	146
Paved Flume	SY	$100.00	
Stmwtr Conc Channel-Excav	SY	$97.00	
ADD Grass Lined-seeded	SY	$19.00	
ADD Grass Lined-sodded	SY	$26.00	
Outlet Protection			
Non-grouted Riprap 18	SY	$87.00	
Concrete 4	SY	$70.00	
Level Spreader	SY	$5.77	
Struc Streambank Protection			
Non-grouted Riprap 18	SY	$87.00	
Gabions	CY	$255.00	
Vegetative Erosion Control			
Sodding incl Fertilizing Banks	SY	$9.00	
Sodding incl Fertilizing Flat	SY	$9.00	
Seeding incl Fertilizing	SY	$3.00	
Soding W/Soil Treat &Watering	SY	$9.00	
Seeding W/Soil Treat &Watering	SY	$3.00	
Straw Mulch w/Tack	SY	$2.00	
Jute Mesh	SY	$2.00	
FEMA ProcessingLOMR/CLOMR	EA	$10,240.00	
As Built (Record Drawings)	EA	$12,967.50	1
SWM/BMP POND	LS	$0.00	
SIGNALIZATION	LS	$0.00	

EFFECTIVE PERIOD OF BOND (IN MONTHS)
TOTAL ESTIMATE OF COMPLETED WORK
+ 10% CONTINGENCY
GRAND TOTAL
FINAL PRICE (+ 4% ANNUAL INTEREST)

		BOND REDUCTION		
Final Price		QUANTITY COMPLETED (REDUCTION REQUEST)	UNIT COST	PREVIOUS QUANTITY COMPLETED
MOBILIZATION GENERAL				
$12,440.00			$0.00	
$0.00			$0.00	
$0.00			$0.00	
SURVEYING				
$44,212.44			$0.00	
R.O.W MONUMENTS SURVEYED IN PLACE				
$0.00			$0.00	
$0.00			$0.00	
EARTHWORK EXCAVATION				
$0.00			$0.00	
$0.00			$0.00	
$0.00			$0.00	
BORROW MATERIAL				
$0.00			$0.00	
$0.00			$0.00	
UNSUITABLE MATERIAL				
$0.00			$0.00	
$0.00			$0.00	
$0.00			$0.00	
CLEAR & GRUB				
$238,595.40			$0.00	
$0.00			$0.00	
LANDSCAPING				
$156,903.00			$0.00	
$444,558.50			$0.00	
PLANTING SHRUBS				
$0.00			$0.00	
$0.00			$0.00	
TREES				
$45,600.00			$0.00	
$0.00			$0.00	
$0.00			$0.00	
MISCELLANEOUS SITE IMPROVEMENTS				
$0.00			$0.00	
$0.00			$0.00	

$0.00		$0.00	
$0.00		$0.00	
$0.00		$0.00	
$0.00		$0.00	
$0.00		$0.00	
$0.00		$0.00	
$0.00		$0.00	
$0.00		$0.00	
STORM DRAINAGE			
$0.00		$0.00	
$0.00		$0.00	
$0.00		$0.00	
$0.00		$0.00	
$0.00		$0.00	
RCP CLASS III ROUND T & G W/MASTIC			
$0.00		$0.00	
$0.00		$0.00	
$0.00		$0.00	
$0.00		$0.00	
$0.00		$0.00	
$0.00		$0.00	
$0.00		$0.00	
$0.00		$0.00	
$0.00		$0.00	
$0.00		$0.00	
$0.00		$0.00	
$0.00		$0.00	
$0.00		$0.00	
$0.00		$0.00	
$0.00		$0.00	
$0.00		$0.00	
$0.00		$0.00	
$0.00		$0.00	

$0.00		$0.00	
$0.00		$0.00	
$0.00		$0.00	
$0.00		$0.00	
$0.00		$0.00	
$0.00		$0.00	
$0.00		$0.00	
$0.00		$0.00	
$0.00		$0.00	
$0.00		$0.00	
$0.00		$0.00	
$0.00		$0.00	
$0.00		$0.00	
$0.00		$0.00	
$0.00		$0.00	
$0.00		$0.00	
$0.00		$0.00	
$0.00		$0.00	
$0.00		$0.00	
$0.00		$0.00	
$0.00		$0.00	
$0.00		$0.00	
$0.00		$0.00	
$0.00		$0.00	
$0.00		$0.00	
$0.00		$0.00	
$0.00		$0.00	
$0.00		$0.00	
$0.00		$0.00	
ELLIPTICAL PIPE - RCP CLASS III			
$0.00		$0.00	
$0.00		$0.00	
$0.00		$0.00	
$0.00		$0.00	

$0.00		$0.00	
$0.00		$0.00	
$0.00		$0.00	
$0.00		$0.00	
$0.00		$0.00	
$0.00		$0.00	
$0.00		$0.00	
$0.00		$0.00	
$0.00		$0.00	
$0.00		$0.00	
$0.00		$0.00	
$0.00		$0.00	
$0.00		$0.00	
$0.00		$0.00	
$0.00		$0.00	
$0.00		$0.00	
$0.00		$0.00	
$0.00		$0.00	
$0.00		$0.00	
$0.00		$0.00	
HDPE PIPE			
$0.00		$0.00	
$0.00		$0.00	
$0.00		$0.00	
$0.00		$0.00	
$139,502.16		$0.00	
$0.00		$0.00	
$20,693.73		$0.00	
$0.00		$0.00	
$0.00		$0.00	
$0.00		$0.00	
$0.00		$0.00	
$0.00		$0.00	
$0.00		$0.00	
$0.00		$0.00	

$0.00		$0.00	
$0.00		$0.00	
$0.00		$0.00	
$0.00		$0.00	
STORM STRUCTURES			
$1,389.00		$0.00	
$1,583.46		$0.00	
$0.00		$0.00	
$0.00		$0.00	
$0.00		$0.00	
$0.00		$0.00	
$0.00		$0.00	
$0.00		$0.00	
$0.00		$0.00	
$0.00		$0.00	
$0.00		$0.00	
$0.00		$0.00	
$0.00		$0.00	
$0.00		$0.00	
$0.00		$0.00	
$0.00		$0.00	
$0.00		$0.00	
$0.00		$0.00	
$0.00		$0.00	
$0.00		$0.00	
$0.00		$0.00	
$0.00		$0.00	
$0.00		$0.00	
$0.00		$0.00	
$0.00		$0.00	
$0.00		$0.00	
$0.00		$0.00	

$0.00		$0.00	
$0.00		$0.00	
$0.00		$0.00	
$0.00		$0.00	
$0.00		$0.00	
$0.00		$0.00	
$0.00		$0.00	
$0.00		$0.00	
$0.00		$0.00	
$0.00		$0.00	
$0.00		$0.00	
$0.00		$0.00	
$0.00		$0.00	
$0.00		$0.00	
$0.00		$0.00	
$0.00		$0.00	
MANHOLES			
$0.00		$0.00	
$0.00		$0.00	
$10,674.00		$0.00	
$0.00		$0.00	
$0.00		$0.00	
Drop Inlets			
$15,380.00		$0.00	
$0.00		$0.00	
$0.00		$0.00	
$0.00		$0.00	
Curb Drop Inlets			
$0.00		$0.00	
$0.00		$0.00	
$0.00		$0.00	
$17,068.48		$0.00	

$46,938.30			$0.00		
$41,305.72			$0.00		
$11,359.07			$0.00		
$0.00			$0.00		
$0.00			$0.00		
$0.00			$0.00		
$0.00			$0.00		
$0.00			$0.00		
$0.00			$0.00		
$0.00			$0.00		
$0.00			$0.00		
$0.00			$0.00		
$0.00			$0.00		
$0.00			$0.00		
$17,435.14			$0.00		
$0.00			$0.00		
$0.00			$0.00		
$0.00			$0.00		
$0.00			$0.00		
$0.00			$0.00		
$0.00			$0.00		
$0.00			$0.00		
$0.00			$0.00		
$0.00			$0.00		
$0.00			$0.00		
$0.00			$0.00		
$0.00			$0.00		
$0.00			$0.00		
$0.00			$0.00		
$0.00			$0.00		
$0.00			$0.00		
$0.00			$0.00		
$0.00			$0.00		
$0.00			$0.00		
$0.00			$0.00		
$0.00			$0.00		
$0.00			$0.00		
$0.00			$0.00		

$0.00		$0.00	
$0.00		$0.00	
$0.00		$0.00	
$0.00		$0.00	
$0.00		$0.00	
$0.00		$0.00	
$0.00		$0.00	
$0.00		$0.00	
$0.00		$0.00	
$0.00		$0.00	
$0.00		$0.00	
$0.00		$0.00	
$0.00		$0.00	
$0.00		$0.00	
$0.00		$0.00	
$0.00		$0.00	
$0.00		$0.00	
$0.00		$0.00	
$0.00		$0.00	
$0.00		$0.00	
$0.00		$0.00	
$0.00		$0.00	
$0.00		$0.00	
$0.00		$0.00	
$0.00		$0.00	
$0.00		$0.00	
$0.00		$0.00	
$0.00		$0.00	
$0.00		$0.00	
$0.00		$0.00	
$0.00		$0.00	
$0.00		$0.00	
$0.00		$0.00	
$0.00		$0.00	
$0.00		$0.00	
$0.00		$0.00	
$0.00		$0.00	
$0.00		$0.00	

$0.00		$0.00	
$0.00		$0.00	
$0.00		$0.00	
$0.00		$0.00	
$0.00		$0.00	
$0.00		$0.00	
$0.00		$0.00	
$0.00		$0.00	
$0.00		$0.00	
$0.00		$0.00	
$0.00		$0.00	
$0.00		$0.00	
$0.00		$0.00	
$0.00		$0.00	
$0.00		$0.00	
$0.00		$0.00	
$0.00		$0.00	
$0.00		$0.00	
$0.00		$0.00	
$0.00		$0.00	
$0.00		$0.00	
$0.00		$0.00	
$0.00		$0.00	
$0.00		$0.00	
$0.00		$0.00	
$0.00		$0.00	
$0.00		$0.00	
$0.00		$0.00	
$0.00		$0.00	
MISCELLANEOUS INLETS			

$0.00		$0.00	
$0.00		$0.00	
$0.00		$0.00	
$0.00		$0.00	
$0.00		$0.00	

Culverts			
$0.00		$0.00	
$0.00		$0.00	
$0.00		$0.00	
$0.00		$0.00	
$0.00		$0.00	
$0.00		$0.00	
$0.00		$0.00	
$0.00		$0.00	
$0.00		$0.00	
$0.00		$0.00	
$0.00		$0.00	
$0.00		$0.00	
$0.00		$0.00	
$0.00		$0.00	
$0.00		$0.00	
$0.00		$0.00	
$0.00		$0.00	
$0.00		$0.00	
$0.00		$0.00	
$0.00		$0.00	
$0.00		$0.00	
$0.00		$0.00	
$0.00		$0.00	
$0.00		$0.00	
$0.00		$0.00	

$0.00		$0.00	
$0.00		$0.00	
$0.00		$0.00	
$0.00		$0.00	
$0.00		$0.00	
$0.00		$0.00	
MISCELLANEOUS STORM			
$0.00		$0.00	
$0.00		$0.00	
$0.00		$0.00	
$0.00		$0.00	
$0.00		$0.00	
$0.00		$0.00	
$0.00		$0.00	
$0.00		$0.00	
$0.00		$0.00	
$1,913.06		$0.00	
$0.00		$0.00	
$0.00		$0.00	
$0.00		$0.00	
$0.00		$0.00	
$0.00		$0.00	
$0.00		$0.00	
$0.00		$0.00	
$0.00		$0.00	
$0.00		$0.00	
$0.00		$0.00	
$0.00		$0.00	
STREET CONSTRUCTION			
$0.00		$0.00	
		$0.00	
$0.00		$0.00	
		$0.00	

$757,212.40		$0.00	
		$0.00	
$153,489.00		$0.00	
		$0.00	
$0.00		$0.00	
		$0.00	
$102,326.00		$0.00	
		$0.00	
$0.00		$0.00	
$0.00		$0.00	
$0.00		$0.00	
$0.00		$0.00	
$34,125.00		$0.00	
$144,364.50		$0.00	
$4,176.00		$0.00	
$0.00		$0.00	
$0.00		$0.00	
$0.00		$0.00	
$0.00		$0.00	
$0.00		$0.00	
$0.00		$0.00	
$0.00		$0.00	
$0.00		$0.00	
$0.00		$0.00	
$0.00		$0.00	
$0.00		$0.00	
$0.00		$0.00	
$0.00		$0.00	
$0.00		$0.00	
$0.00		$0.00	
$0.00		$0.00	
$0.00		$0.00	
$0.00		$0.00	
$0.00		$0.00	
$1,189.00		$0.00	
$1,024.00		$0.00	
$148,450.00		$0.00	

SIDEWALKS AND TRAILS

$0.00			$0.00	
$0.00			$0.00	
$0.00			$0.00	
HANDRAIL				
$0.00			$0.00	
$0.00			$0.00	
$0.00			$0.00	
3212			$0.00	
CRITICAL SLOPE STABILIZATION				
$0.00			$0.00	
$0.00			$0.00	
$0.00			$0.00	
$0.00			$0.00	
$0.00			$0.00	
$0.00			$0.00	
$0.00			$0.00	
$0.00			$0.00	
$0.00			$0.00	
$0.00			$0.00	
$0.00			$0.00	
$0.00			$0.00	
$0.00			$0.00	
$0.00			$0.00	
$0.00			$0.00	
$0.00			$0.00	
SPECIAL ITEMS				
$0.00			$0.00	
$12,967.50			$0.00	
$0.00			$0.00	
$0.00			$0.00	

12	EFFECTIVE PERIOD OF BOND (IN MONTHS)
$2,630,086.86	TOTAL BOND REDUCTION REQUEST
$263,008.69	+ 10% CONTINGENCY
$2,893,095.55	GRAND TOTAL
$3,008,819.37	FINAL BOND REDUCTION REQUEST (+4% ANNUAL INTEREST)

N			City Use Only
TOTAL QUANTITY COMPLETED (INCLUDING REDUCTION REQUEST)	EXTENSION	%COMPLETE	%APPROVED
0		0%	
0		0%	
0		0%	
0		0%	
0		0%	
0		0%	
0		0%	
0		0%	
0		0%	
0		0%	
0		0%	
0		0%	
0		0%	
0		0%	
0		0%	
0		0%	
0		0%	
0		0%	
0		0%	
0		0%	
0		0%	
0		0%	
0		0%	
0		0%	
0		0%	

0		0%	
0		0%	
0		0%	
0		0%	
0		0%	
0		0%	
0		0%	
0		0%	
0		0%	
0		0%	
0		0%	
0		0%	
0		0%	
0		0%	
0		0%	
0		0%	
0		0%	
0		0%	
0		0%	
0		0%	
0		0%	
0		0%	
0		0%	
0		0%	
0		0%	
0		0%	
0		0%	
0		0%	
0		0%	
0		0%	
0		0%	

0		0%	
0		0%	
0		0%	
0		0%	
0		0%	
0		0%	
0		0%	
0		0%	
0		0%	
0		0%	
0		0%	
0		0%	
0		0%	
0		0%	
0		0%	
0		0%	
0		0%	
0		0%	
0		0%	
0		0%	
0		0%	
0		0%	
0		0%	
0		0%	
0		0%	
0		0%	
0		0%	
0		0%	
0		0%	
0		0%	
0		0%	
0		0%	
0		0%	

0		0%	
0		0%	
0		0%	
0		0%	
0		0%	
0		0%	
0		0%	
0		0%	
0		0%	
0		0%	
0		0%	
0		0%	
0		0%	
0		0%	
0		0%	
0		0%	
0		0%	
0		0%	
0		0%	
0		0%	
0		0%	
0		0%	
0		0%	
0		0%	
0		0%	
0		0%	
0		0%	
0		0%	
0		0%	
0		0%	
0		0%	
0		0%	
0		0%	
0		0%	

0		0%	
0		0%	
0		0%	
0		0%	
0		0%	
0		0%	
0		0%	
0		0%	
0		0%	
0		0%	
0		0%	
0		0%	
0		0%	
0		0%	
0		0%	
0		0%	
0		0%	
0		0%	
0		0%	
0		0%	
0		0%	
0		0%	
0		0%	
0		0%	
0		0%	
0		0%	
0		0%	
0		0%	
0		0%	
0		0%	
0		0%	

0		0%	
0		0%	
0		0%	
0		0%	
0		0%	
0		0%	
0		0%	
0		0%	
0		0%	
0		0%	
0		0%	
0		0%	
0		0%	
0		0%	
0		0%	
0		0%	
0		0%	
0		0%	
0		0%	
0		0%	
0		0%	
0		0%	
0		0%	
0		0%	
0		0%	
0		0%	
0		0%	
0		0%	
0		0%	

0		0%	
0		0%	
0		0%	
0		0%	
0		0%	
0		0%	
0		0%	
0		0%	
0		0%	
0		0%	
0		0%	
0		0%	
0		0%	
0		0%	
0		0%	
0		0%	
0		0%	
0		0%	
0		0%	
0		0%	
0		0%	
0		0%	
0		0%	
0		0%	
0		0%	
0		0%	
0		0%	
0		0%	
0		0%	
0		0%	
0		0%	
0		0%	
0		0%	
0		0%	
0		0%	
0		0%	
0		0%	
0		0%	

0		0%	
0		0%	
0		0%	
0		0%	
0		0%	
0		0%	
0		0%	
0		0%	
0		0%	
0		0%	
0		0%	
0		0%	
0		0%	
0		0%	
0		0%	
0		0%	
0		0%	
0		0%	
0		0%	
0		0%	
0		0%	
0		0%	
0		0%	
0		0%	
0		0%	
0		0%	
0		0%	
0		0%	
0		0%	
0		0%	
0		0%	
0		0%	
0		0%	
0		0%	
0		0%	
0		0%	
0		0%	
0		0%	

0		0%	
0		0%	
0		0%	
0		0%	
0		0%	
0		0%	
0		0%	
0		0%	
0		0%	
0		0%	
0		0%	
0		0%	
0		0%	
0		0%	
0		0%	
0		0%	
0		0%	
0		0%	
0		0%	
0		0%	
0		0%	
0		0%	
0		0%	
0		0%	
0		0%	
0		0%	
0		0%	
0		0%	
0		0%	
0		0%	

0		0%	
0		0%	
0		0%	
0		0%	
0		0%	
0		0%	
0		0%	
0		0%	
0		0%	
0		0%	
0		0%	
0		0%	
0		0%	
0		0%	
0		0%	
0		0%	
0		0%	
0		0%	
0		0%	
0		0%	
0		0%	
0		0%	
0		0%	
0		0%	
0		0%	
0		0%	
0		0%	
0		0%	
0		0%	

0		0%	
0		0%	
0		0%	
0		0%	
0		0%	
0		0%	
0		0%	
0		0%	
0		0%	
0		0%	
0		0%	
0		0%	
0		0%	
0		0%	
0		0%	
0		0%	
0		0%	
0		0%	
0		0%	
0		0%	
0		0%	
0		0%	
0		0%	
0		0%	
0		0%	
0		0%	

0		0%	
0		0%	
0		0%	
0		0%	
0		0%	
0		0%	
0		0%	
0		0%	
0		0%	
0		0%	
0		0%	
0		0%	
0		0%	
0		0%	
0		0%	
0		0%	
0		0%	
0		0%	
0		0%	
0		0%	
0		0%	
0		0%	
0		0%	
0		0%	
0		0%	
0		0%	
0		0%	
0		0%	
0		0%	
0		0%	
0		0%	
0		0%	
0		0%	

0		0%	
0		0%	
0		0%	
0		0%	
0		0%	
0		0%	
0		0%	
0		0%	
0		0%	
0		0%	
0		0%	
0		0%	
0		0%	
0		0%	
0		0%	
0		0%	
0		0%	
0		0%	
0		0%	
0		0%	
0		0%	
0		0%	
0		0%	
0		0%	
0		0%	
0		0%	
0		0%	

$0.00
$0.00
$0.00
$0.00

TOTAL ESTIMATED - BOND REMAINING	$3,008,819.37

Kimley»Horn

Memorandum

To: Mark Flynn
Arcadia Land, Inc.
108 N. George Street, 2nd Floor
Charles Town, WV 25414

From: Mark Phillips, P.E.

Through: Mr. James Newman, AICP
City of Charles Town
101 E Washington Street
Charles Town, WV 25414

Date: April 14, 2025

Subject: Norborne Glebe Phases 11, 12, and 13 Bond Initiation Review

This memorandum summarizes our review of the Bond Initiation request for the Norborne Glebe Subdivision Phases 11, 12, and 13 Bond Initiation Application (dated March 31, 2025, prepared by Greenway Engineering). Using the Final Subdivision Plans and Comment Response Letters provided by the Applicant we have no further comments.

Kimley-Horn finds the Bond Initiation requests to be in conformance with the Plans and recommends approval of the initiation requests.

Thank you for the opportunity to review this Bond Initiation request. In the meantime, please feel free to contact us at 703-870-3631 should you have any questions.

KIMLEY-HORN & ASSOCIATES, INC.

Mark Phillips, P.E.
Project Manager
Associate

City Council
101 East Washington Street
Charles Town, WV 25414

Meeting: 05/05/25
Department: City Council
Category: Report
Initiator:

SCHEDULED

AGENDA ITEM (ID #)

2025-517: Ordinance Committee's Pending Ordinance List Discussion

ATTACHMENTS:

City Council
101 East Washington Street
Charles Town, WV 25414

Meeting: 05/05/25
Department: City Council
Category: Report
Initiator:

SCHEDULED

AGENDA ITEM (ID #)

2025-518: Approval of Audit RFP

Proposed Motion: Authorize staff to award the City's Audit contract to Perry & Associates, CPAs.

ATTACHMENTS:

- Audit Proposal Scoring Sheets.pdf

INDIVIDUAL AUDIT PROPOSAL SCORE SHEET

Firm Name: Ahmad Associates LTD
RFP #: 24-347
Number of Committee Members: 3
Bid Amount: $45,626

Responsiveness to the proposal: Maximum 15 points Up to 5 points per question	**Scorer 1**	**Scorer 2**	**Scorer 3**	**Scorer 4**	**Scorer 5**	**Average Points**
Does the Proposal indicate a sincere interest in your entity and was it provided in a timely manner?	3	5	4			4
Is the language in the proposal clear?	4	4	4			4
Does the proposing firm understand your government's organization and its accounting system and records?	3	5	3			4
Total						12

Understanding of the audit to be conducted: Maximum 24 points Up to 6 points per question	**Scorer 1**	**Scorer 2**	**Scorer 3**	**Scorer 4**	**Scorer 5**	**Average Points**
Does the proposal specify the type of audit to be performed and does the proposal indicate a clear understanding of the funds and financial statements that are applicable to your particular entity?	3	6	4			4
Does the proposal describe in clear language the work plan to conduct the engagement including planning, analysis of internal controls, substantive testing, and federal award testing (if applicable) necessary for your entity?	4	4	3			4
Does the proposal demonstrate an understanding of the audit resources/manpower requirements?	4	6	5			5
Does the proposal demonstrate the firm has the ability to complete the audit within the required period?	4	6	4			5
Total						18

Technical Experience: Maximum 34 points	**Scorer 1**	**Scorer 2**	**Scorer 3**	**Scorer 4**	**Scorer 5**	**Average Points**
Do the audit supervisor and the assigned staff have experience in this entity type (i.e. Class II Cities)? Up to 6 points	3	4	3			3
Does the majority of the key audit team have three or more years of governmental auditing experience? Up to 6 points	5	6	5			5
Does the firm have extensive experience with federal grants and the Single Audit (if this is not a Single Audit performed in accordance with Circular A-133, leave blank)? Up to 6 points	5	6	5			5
Does the firm have experience auditing different types of governments in WV in the last three years? Up to 4 points	3	3	3			3
Are the majority of the key audit team members CPAs and do the professional affiliations of the firm demonstrate a dedication to governmental accounting and auditing? Up to 6 points	5	6	5			5
In reviewing the firms most recent peer review report and letter of comments (if applicable), does the report and comments (if applicable) indicate the firm is meeting professional standards? Up to 3 points	3	2	3			3
The firm has documented that they are a member of the AICPA Governmental Audit Quality Control Center? (If yes, an automatic 3 points, if no 0 points)	Y					3
Total						27

Cost Criteria	**Bid**	**Average**	**%**	**Multiplier**		**Total**
	$45,626	$33,760	0.740	10		7

Grand Total	**64**

INDIVIDUAL AUDIT PROPOSAL SCORE SHEET

Firm Name: Ahmad Associates LTD
RFP #: 24-347
Number of Committee Members: 3
Bid Amount: $45,626

Scored by: (Signatures of Audit Committee)	Date	Printed Name
1. Robert Trainor	30 Apr 2025	Robert ~~Trainer~~ Trainor
2. Jeff Hynes	4/30/25	Jeff Hynes
3. Lori Nice	4-30-25	Lori Nice
4.		
5.		

INDIVIDUAL AUDIT PROPOSAL SCORE SHEET

Firm Name: Ferrari & Associates, PLLC
RFP #: 24-347
Number of Committee Members: 3
Bid Amount: $39,425

Responsiveness to the proposal: Maximum 15 points Up to 5 points per question	Scorer 1	Scorer 2	Scorer 3	Scorer 4	Scorer 5	Average Points
Does the Proposal indicate a sincere interest in your entity and was it provided in a timely manner?	4	5	3			4
Is the language in the proposal clear?	3	4	3			3
Does the proposing firm understand your government's organization and its accounting system and records?	4	2	3			3
Total						**10**

Understanding of the audit to be conducted: Maximum 24 points Up to 6 points per question	Scorer 1	Scorer 2	Scorer 3	Scorer 4	Scorer 5	Average Points
Does the proposal specify the type of audit to be performed and does the proposal indicate a clear understanding of the funds and financial statements that are applicable to your particular entity?	3	2	3			3
Does the proposal describe in clear language the work plan to conduct the engagement including planning, analysis of internal controls, substantive testing, and federal award testing (if applicable) necessary for your entity?	2	1	2			2
Does the proposal demonstrate an understanding of the audit resources/manpower requirements?	3	5	3			4
Does the proposal demonstrate the firm has the ability to complete the audit within the required period?	3	2	3			3
Total						**12**

Technical Experience: Maximum 34 points	Scorer 1	Scorer 2	Scorer 3	Scorer 4	Scorer 5	Average Points
Do the audit supervisor and the assigned staff have experience in this entity type (i.e. Class II Cities)? Up to 6 points	5	6	5			5
Does the majority of the key audit team have three or more years of governmental auditing experience? Up to 6 points	5	6	5			5
Does the firm have extensive experience with federal grants and the Single Audit (if this is not a Single Audit performed in accordance with Circular A-133, leave blank)? Up to 6 points	0	2	1			1
Does the firm have experience auditing different types of governments in WV in the last three years? Up to 4 points	4	3	4			4
Are the majority of the key audit team members CPAs and do the professional affiliations of the firm demonstrate a dedication to governmental accounting and auditing? Up to 6 points	5	6	5			5
In reviewing the firms most recent peer review report and letter of comments (if applicable), does the report and comments (if applicable) indicate the firm is meeting professional standards? Up to 3 points	3	3	3			3
The firm has documented that they are a member of the AICPA Governmental Audit Quality Control Center? (If yes, an automatic 3 points, if no 0 points)	Y					3
Total						**26**

Cost Criteria	Bid	Average	%	Multiplier		Total
	$39,425	$33,760	0.856	10		9

Grand Total	57

INDIVIDUAL AUDIT PROPOSAL SCORE SHEET

Firm Name: Ferrari & Associates, PLLC
RFP #: 24-347
Number of Committee Members: 3
Bid Amount: $39,425

Scored by: (Signatures of Audit Committee)	Date	Printed Name
1. Robert M Trainer	30 Apr 2025	Robert ~~Trainer~~ Trainor
2. Jeff Hynes	4/30/25	Jeff Hynes
3. Lori Nice	4/30/25	Lori Nice
4.		0
5.		0

INDIVIDUAL AUDIT PROPOSAL SCORE SHEET

Firm Name: Fizer & Associates, PLLC
RFP #: 24-347
Number of Committee Members: 3
Bid Amount: $22,400

Responsiveness to the proposal: Maximum 15 points Up to 5 points per question	Scorer 1	Scorer 2	Scorer 3	Scorer 4	Scorer 5	Average Points
Does the Proposal indicate a sincere interest in your entity and was it provided in a timely manner?	4	5	5			5
Is the language in the proposal clear?	3	3	3			3
Does the proposing firm understand your government's organization and its accounting system and records?	3	2	4			3
Total						11

Understanding of the audit to be conducted: Maximum 24 points Up to 6 points per question	Scorer 1	Scorer 2	Scorer 3	Scorer 4	Scorer 5	Average Points
Does the proposal specify the type of audit to be performed and does the proposal indicate a clear understanding of the funds and financial statements that are applicable to your particular entity?	2	2	3			2
Does the proposal describe in clear language the work plan to conduct the engagement including planning, analysis of internal controls, substantive testing, and federal award testing (if applicable) necessary for your entity?	3	2	4			3
Does the proposal demonstrate an understanding of the audit resources/manpower requirements?	2	3	3			3
Does the proposal demonstrate the firm has the ability to complete the audit within the required period?	2	3	3			3
Total						11

Technical Experience: Maximum 34 points	Scorer 1	Scorer 2	Scorer 3	Scorer 4	Scorer 5	Average Points
Do the audit supervisor and the assigned staff have experience in this entity type (i.e. Class II Cities)? Up to 6 points	3	4	4			4
Does the majority of the key audit team have three or more years of governmental auditing experience? Up to 6 points	2	6	5			4
Does the firm have extensive experience with federal grants and the Single Audit (if this is not a Single Audit performed in accordance with Circular A-133, leave blank)? Up to 6 points	0	1	2			1
Does the firm have experience auditing different types of governments in WV in the last three years? Up to 4 points	2	2	4			3
Are the majority of the key audit team members CPAs and do the professional affiliations of the firm demonstrate a dedication to governmental accounting and auditing? Up to 6 points	3	6	5			5
In reviewing the firms most recent peer review report and letter of comments (if applicable), does the report and comments (if applicable) indicate the firm is meeting professional standards? Up to 3 points	1	0	0			0
The firm has documented that they are a member of the AICPA Governmental Audit Quality Control Center? (If yes, an automatic 3 points, if no 0 points)	Y					3
Total						20

Cost Criteria	Bid	Average	%	Multiplier		Total
	$22,400	$33,760	1.507	10		15

Grand Total	57

INDIVIDUAL AUDIT PROPOSAL SCORE SHEET

Firm Name: Fizer & Associates, PLLC
RFP #: 24-347
Number of Committee Members: 3
Bid Amount: $22,400

Scored by: (Signatures of Audit Committee)	Date	Printed Name
1. Robert M Trainor	30 Apr 2025	Robert ~~Trainer~~ Trainor
2. Jeffrey C Hynes	4/30/25	Jeff Hynes
3. Lori L Nice	4-30-25	Lori Nice
4.		0
5.		0

INDIVIDUAL AUDIT PROPOSAL SCORE SHEET

Firm Name: Jessica Heldman, CPA
RFP #: 24-347
Number of Committee Members: 3
Bid Amount: $26,250

Responsiveness to the proposal: Maximum 15 points Up to 5 points per question	Scorer 1	Scorer 2	Scorer 3	Scorer 4	Scorer 5	Average Points
Does the Proposal indicate a sincere interest in your entity and was it provided in a timely manner?	3	5	5			4
Is the language in the proposal clear?	4	5	5			5
Does the proposing firm understand your government's organization and its accounting system and records?	3	4	5			4
Total						13

Understanding of the audit to be conducted: Maximum 24 points Up to 6 points per question	Scorer 1	Scorer 2	Scorer 3	Scorer 4	Scorer 5	Average Points
Does the proposal specify the type of audit to be performed and does the proposal indicate a clear understanding of the funds and financial statements that are applicable to your particular entity?	3	4	5			4
Does the proposal describe in clear language the work plan to conduct the engagement including planning, analysis of internal controls, substantive testing, and federal award testing (if applicable) necessary for your entity?	4	5	6			5
Does the proposal demonstrate an understanding of the audit resources/manpower requirements?	2	6	6			5
Does the proposal demonstrate the firm has the ability to complete the audit within the required period?	2	5	5			4
Total						18

Technical Experience: Maximum 34 points	Scorer 1	Scorer 2	Scorer 3	Scorer 4	Scorer 5	Average Points
Do the audit supervisor and the assigned staff have experience in this entity type (i.e. Class II Cities)? Up to 6 points	0	3	2			2
Does the majority of the key audit team have three or more years of governmental auditing experience? Up to 6 points	2	6	2			3
Does the firm have extensive experience with federal grants and the Single Audit (if this is not a Single Audit performed in accordance with Circular A-133, leave blank)? Up to 6 points	0	2	2			1
Does the firm have experience auditing different types of governments in WV in the last three years? Up to 4 points	0	1	2			1
Are the majority of the key audit team members CPAs and do the professional affiliations of the firm demonstrate a dedication to governmental accounting and auditing? Up to 6 points	2	6	5			4
In reviewing the firms most recent peer review report and letter of comments (if applicable), does the report and comments (if applicable) indicate the firm is meeting professional standards? Up to 3 points	0	0	0			0
The firm has documented that they are a member of the AICPA Governmental Audit Quality Control Center? (If yes, an automatic 3 points, if no 0 points)	Y					3
Total						14

Cost Criteria	Bid	Average	%	Multiplier		Total
	$26,250	$33,760	1.286	10		13

Grand Total	58

INDIVIDUAL AUDIT PROPOSAL SCORE SHEET

Firm Name: Jessica Heldman, CPA
RFP #: 24-347
Number of Committee Members: 3
Bid Amount: $26,250

Scored by: (Signatures of Audit Committee)	Date	Printed Name
1. Robert M Trainor	30 Apr 2025	Robert Trainer Trainor
2. Jeffrey C Hynes	4/30/25	Jeff Hynes
3. Lori Nice	4-30-25	Lori Nice
4.		0
5.		0

INDIVIDUAL AUDIT PROPOSAL SCORE SHEET

Firm Name: Perry & Associates CPAs
RFP #: 24-347
Number of Committee Members: 3
Bid Amount: $35,100

Responsiveness to the proposal: Maximum 15 points Up to 5 points per question	**Scorer 1**	**Scorer 2**	**Scorer 3**	**Scorer 4**	**Scorer 5**	**Average Points**
Does the Proposal indicate a sincere interest in your entity and was it provided in a timely manner?	4	5	5			5
Is the language in the proposal clear?	4	5	5			5
Does the proposing firm understand your government's organization and its accounting system and records?	4	5	5			5
Total						15

Understanding of the audit to be conducted: Maximum 24 points Up to 6 points per question	**Scorer 1**	**Scorer 2**	**Scorer 3**	**Scorer 4**	**Scorer 5**	**Average Points**
Does the proposal specify the type of audit to be performed and does the proposal indicate a clear understanding of the funds and financial statements that are applicable to your particular entity?	3	5	5			4
Does the proposal describe in clear language the work plan to conduct the engagement including planning, analysis of internal controls, substantive testing, and federal award testing (if applicable) necessary for your entity?	4	5	6			5
Does the proposal demonstrate an understanding of the audit resources/manpower requirements?	4	6	5			5
Does the proposal demonstrate the firm has the ability to complete the audit within the required period?	4	5	5			5
Total						19

Technical Experience: Maximum 34 points	**Scorer 1**	**Scorer 2**	**Scorer 3**	**Scorer 4**	**Scorer 5**	**Average Points**
Do the audit supervisor and the assigned staff have experience in this entity type (i.e. Class II Cities)? Up to 6 points	5	4	5			5
Does the majority of the key audit team have three or more years of governmental auditing experience? Up to 6 points	5	3	5			4
Does the firm have extensive experience with federal grants and the Single Audit (if this is not a Single Audit performed in accordance with Circular A-133, leave blank)? Up to 6 points	0	3	3			2
Does the firm have experience auditing different types of governments in WV in the last three years? Up to 4 points	4	3	4			4
Are the majority of the key audit team members CPAs and do the professional affiliations of the firm demonstrate a dedication to governmental accounting and auditing? Up to 6 points	5	4	5			5
In reviewing the firms most recent peer review report and letter of comments (if applicable), does the report and comments (if applicable) indicate the firm is meeting professional standards? Up to 3 points	3	3	3			3
The firm has documented that they are a member of the AICPA Governmental Audit Quality Control Center? (If yes, an automatic 3 points, if no 0 points)	Y					3
Total						26

Cost Criteria	**Bid**	**Average**	**%**	**Multiplier**		**Total**
	$35,100	$33,760	0.962	10		10

Grand Total	70

Scored by: (Signatures of Audit Committee)	Date	Printed Name
1. Robert M Trainor	30 Apr 2025	Robert ~~Trainer~~ Tramor
2. Jeff Hynes	4/30/25	Jeff Hynes
3. Lori Nice	4-30-25	Lori Nice
4.		0
5.		0

AUDIT PROPOSAL SCORE SHEET SUMMARY

RFP #: 24-347

Entity: City of Charles Town

Audit Year(s) Ending: 2024 & 2025

Number of Bids Received: 5

Accounting Firms	Contract Amount	Responsiveness to the Proposal	Understanding of the Audit to be Performed	Technical Experience	Cost Criteria Average divided by Cost times 10	Entity Preference + 1 to 5 Points (to ONE preferred firm)	Total Points
		0 - 15	0 - 24	0 - 34	0 - 25	+ 1 to 5	Maximum of 103
Ahmad Associates LTD	$ 45,626	12	18	27	7		64
Ferrari & Associates, PLLC	$ 39,425	10	12	26	9		57
Fizer & Associates, PLLC	$ 22,400	11	11	20	15		57
Jessica Heldman, CPA	$ 26,250	13	18	14	13		58
Perry & Associates CPAs	$ 35,100	15	19	26	10		70
Average	**$ 33,760**						

By signing below, you are making the assertion that there is no conflict of interest or collusion of the audit committee members or another representative of the enity with the firms submitting bid proposals and/or the firm awarded the contract. Further, you are making the assertion that the scoring of the bid proposals by the audit committee members are true and not influenced by any bidder or person.

Scored by: (Signatures of Audit Committee)	Date	Printed Name
1. Robert Trainor	30 April 2025	Robert ~~Trainer~~ Trainor
2. Jeffrey C Hynes	4/30/25	Jeff Hynes
3. Lori Nice	4-30-25	Lori Nice
4.		0
5.		0

City Council
101 East Washington Street
Charles Town, WV 25414

Meeting: 05/05/25
Department: City Council
Category: Report
Initiator:

SCHEDULED

AGENDA ITEM (ID #)

2025-521: Charles Town African American Cemetary Update/Council Committee Appointments

Proposed Motion: Approve the Council Select Committee on memorializing the "Coloured" Graveyard at the intersection of South Seminary and East Avis Streets

ATTACHMENTS:

- Council Select Committee.pdf

City of Charles Town

101 East Washington Street, P.O. Box 14, Charles Town, WV 25414
Phone: (304) 725-2311 ♦ Web: www.charlestownwv.us

May 5, 2025

Re: Council Select Committee on memorializing the "Coloured" Grave Yard at the intersection of South Seminary and East Avis Streets

MAYOR
Robert M. Trainor

CITY COUNCIL
James Kratovil
Elizabeth Ricketts
Jeff Hynes
Kevin Tester
Julie Philabaum
Micheal George
Andie Sugrue

CITY MANAGER
John Nissel

Dear Council members,

Please be advised that a Council Select Committee has been commissioned to conduct research on the historic African-American grave yard at the intersection of South Seminary and East Avis Streets and to provide the Council with recommendations as to how to best memorialize grave yard and the individuals interred there. Among the goals of the Select Committee are but are not limited to the following:

1) Identify the extend of the grave yard;
2) Preserve as much of the grave yard as possible;
3) Research and document the history of the grave yard, including the individuals interred there and the grave yard's relationship to other African-American cemeteries and burial sites int eh County; and
4) Provide the Council with recommendations for properly memorializing the grave yard the individuals buried therein, including estimated expenses and recommended fiscal sources.

The following persons are hereby appointed to the Select Committee:

- Ms. Priscilla Rodd - Former Charles Town Council Representative
- Pastor Paul Brown – President of the Black Clergy Association
- Ms. Ann Nawaz – Jefferson County National Association for the Advancement of Colored People (NAACP)
- Ms. Linda Downing Ballard – Associate member of the Jefferson County Black History Preservation Society
- Ms. Addison Reese – Jefferson County Historic Landmark Commission
- Ms. Delores Foster – Harpers Ferry/Bolivar Historic Town Foundation
- Reverand Timothy Robinson – Zion Baptist Church

The following persons will provide support to the Select Committee:

- Ms. Cindy Rezmer – City of Charles Town
- Ms. Lori Wysong – Director, Jefferson County Museum
- Ms. Kristen Stolipher – General Manager, Charles Town Utility Board

All Committee meetings will conform with applicable ordinances, rules, and regulations.

John Nissel
City Manager

City Council
101 East Washington Street
Charles Town, WV 25414

Meeting: 05/05/25
Department: City Council
Category: Report
Initiator:

SCHEDULED

AGENDA ITEM (ID #)

2025-524: Payment of Bills - May 5, 2025

Proposed Motion: Approve the bills for payment.

ATTACHMENTS:

- CAPITAL RESERVE COUNCIL REPORT 2025-05-01.pdf
- GEN FUND COUNCIL REPORT 2025-05-01.pdf
- PARKS N REC COUNCIL REPORT 2025-05-01.pdf
- POLICE PENSION COUNCIL REPORT 2025 05 01.pdf

VENDOR SORT KEY	DATE	DESCRIPTION	FUND	DEPARTMENT	AMOUNT
MICHAEL BAKER INTERNATIONAL, INC	5/01/25	CT ZONING REWRITE	CAPITAL RESERVE	GENERAL GOVERNMENT	3,940.32
				TOTAL:	3,940.32
MONTROSE ENVIRONMENTAL SOLUTIONS INC	5/01/25	ENVIRNMTL ASSMT DEPOT PRO	CAPITAL RESERVE	CULTURE & RECREATION	3,757.00
				TOTAL:	3,757.00
TYLER TECHNOLOGIES, INC	5/01/25	CH TYLER PRO10 UPGRADE	CAPITAL RESERVE	GENERAL GOVERNMENT	42,017.00
	5/01/25	CH TYLER PRO10 UPGRADE	CAPITAL RESERVE	GENERAL GOVERNMENT	13,361.03-
	5/01/25	CRDT UTILITY BLNG REFUND	CAPITAL RESERVE	GENERAL GOVERNMENT	156.00-
				TOTAL:	28,499.97

========== FUND TOTALS ==========

200	CAPITAL RESERVE	36,197.29
	GRAND TOTAL:	36,197.29

TOTAL PAGES: 1

APPROVED BY: _____

APPROVED BY: _____

SELECTION CRITERIA

SELECTION OPTIONS

VENDOR SET:	01-City of Charles Town
VENDOR:	All
CLASSIFICATION:	All
BANK CODE:	Include: CAP1
ITEM DATE:	0/00/0000 THRU 99/99/9999
ITEM AMOUNT:	99,999,999.00CR THRU 99,999,999.00
GL POST DATE:	0/00/0000 THRU 99/99/9999
CHECK DATE:	5/01/2025 THRU 5/01/2025

PAYROLL SELECTION

PAYROLL EXPENSES:	NO
EXPENSE TYPE:	N/A
CHECK DATE:	0/00/0000 THRU 99/99/9999

PRINT OPTIONS

PRINT DATE:	Check Date
SEQUENCE:	By Vendor Sort
DESCRIPTION:	Item
GL ACCTS:	NO
REPORT TITLE:	COUNCIL REPORT
SIGNATURE LINES:	2

PACKET OPTIONS

INCLUDE REFUNDS:	YES
INCLUDE OPEN ITEM:	NO

VENDOR SORT KEY	DATE	DESCRIPTION	FUND	DEPARTMENT	AMOUNT
BLACK STONE ROOFING LLC	5/01/25	OVERPMNT BL	GENERAL FUND	TREASURER'S OFFICE	265.00
				TOTAL:	265.00
CARICATURE ARTISTS GROUP LLC	5/01/25	CARICATURE ARTIST/ WVFEST	GENERAL FUND	FAIR ASSOC/FESTIVAL	1,215.00
				TOTAL:	1,215.00
CHARLES TOWN BUILDING COMMISSION	5/01/25	APRIL 25 CH&PD&CTUB RENT	GENERAL FUND	CITY HALL	16,667.00
	5/01/25	APRIL 25 CH&PD&CTUB RENT	GENERAL FUND	CITY HALL	2,550.00
	5/01/25	APRIL 25 CH&PD&CTUB RENT	GENERAL FUND	POLICE DEPARTMENT	7,840.98
				TOTAL:	27,057.98
CHARLES TOWN UTILITY BOARD	5/01/25	PD 3/26 WATER DELIVERY	GENERAL FUND	POLICE DEPARTMENT	122.90
				TOTAL:	122.90
EMPOWER RETIREMENT	5/01/25	3/28/2025 DFCMP/ROTH	GENERAL FUND	NON-DEPARTMENTAL	4,758.18
	5/01/25	3/28/2025 DFCMP/ROTH	GENERAL FUND	NON-DEPARTMENTAL	3,047.47
	5/01/25	3/28/2025 DFCMP/ROTH	GENERAL FUND	NON-DEPARTMENTAL	1,191.22
				TOTAL:	8,996.87
FIRST-CITIZENS BANK & TRUST CO	5/01/25	APRIL25 2ND FLOOR PLOTTER	GENERAL FUND	CITY HALL	506.12
	5/01/25	APRIL25 1ST FLOOR COPIER	GENERAL FUND	CITY HALL	239.68
				TOTAL:	745.80
FRONTIER, INC.	5/01/25	4/25 CH ELEVATOR	GENERAL FUND	CITY HALL	71.34
	5/01/25	4/24-5/23 PD PHONE SERV	GENERAL FUND	POLICE DEPARTMENT	67.55
				TOTAL:	138.89
HIRE LEVEL HCM INC	5/01/25	MAR14 COUNCIL PAYROLL INV	GENERAL FUND	CITY HALL	82.60
	5/01/25	3/14/25 PAYROLL SERVICES	GENERAL FUND	CITY HALL	272.14
	5/01/25	MAR 25 CITY PAYROLL INV	GENERAL FUND	CITY HALL	337.79
	5/01/25	3/14/25 MAYOR COUNCIL INV	GENERAL FUND	CITY HALL	82.60
	5/01/25	4/15/25 MAYOR/COUNCIL INV	GENERAL FUND	CITY HALL	125.87
				TOTAL:	901.00
JOHNSON CONTROLS SECURITY SOLUTIONS	5/01/25	RH ALARM 5/01-7/31/25	GENERAL FUND	CITY HALL	385.68
				TOTAL:	385.68
KONE INC.	5/01/25	CH ELEVATOR REPAIR 4/14	GENERAL FUND	STREETS & HIGHWAYS	269.14
				TOTAL:	269.14
LUPIS TONY	5/01/25	OVERPMT 25000047	GENERAL FUND	CITY CLERK'S OFFICE	12.00
				TOTAL:	12.00
T-MOBILE	5/01/25	3/21-4/20 CELL SERVICE	GENERAL FUND	ECONOMIC DEVELOPMENT	31.99
	5/01/25	3/21-4/20 CELL SERVICE	GENERAL FUND	CITY MANAGER'S OFFICE	42.09
	5/01/25	3/21-4/20 CELL SERVICE	GENERAL FUND	CITY ATTORNEY	17.85
	5/01/25	3/21-4/20 CELL SERVICE	GENERAL FUND	ENFORCEMENT AGENCY	17.85
	5/01/25	3/21-4/20 CELL SERVICE	GENERAL FUND	PLANNING & ZONING	61.45
	5/01/25	3/21-4/20 CELL SERVICE	GENERAL FUND	CITY HALL	31.99
	5/01/25	3/21-4/20 CELL SERVICE	GENERAL FUND	POLICE DEPARTMENT	64.88-
	5/01/25	3/21-4/20 CELL SERVICE	GENERAL FUND	STREETS & HIGHWAYS	58.85
				TOTAL:	197.19
TYLER TECHNOLOGIES, INC	5/01/25	UTILIY BILING SMS/CALLS	GENERAL FUND	TREASURER'S OFFICE	336.50
	5/01/25	UTILIY BILING SMS/CALLS	GENERAL FUND	TREASURER'S OFFICE	156.00-
	5/01/25	INSITE TRANS FEES CC	GENERAL FUND	TREASURER'S OFFICE	3.75

VENDOR SORT KEY	DATE	DESCRIPTION	FUND	DEPARTMENT	AMOUNT
				TOTAL:	184.25
WV PERS (CPRB)	5/01/25	FEB 2025 MPFRS PAYMENT	GENERAL FUND	NON-DEPARTMENTAL	7,228.16
	5/01/25	FEB 2025 PERS PAYMENT	GENERAL FUND	NON-DEPARTMENTAL	27,092.72
				TOTAL:	34,320.88

========== FUND TOTALS ==========

001	GENERAL FUND	74,812.58
	GRAND TOTAL:	74,812.58

TOTAL PAGES: 2

APPROVED BY: _____

APPROVED BY: _____

SELECTION CRITERIA

SELECTION OPTIONS

VENDOR SET: 01-City of Charles Town
VENDOR: All
CLASSIFICATION: All
BANK CODE: Exclude: CAP1
ITEM DATE: 0/00/0000 THRU 99/99/9999
ITEM AMOUNT: 99,999,999.00CR THRU 99,999,999.00
GL POST DATE: 0/00/0000 THRU 99/99/9999
CHECK DATE: 5/01/2025 THRU 5/01/2025

PAYROLL SELECTION

PAYROLL EXPENSES: NO
EXPENSE TYPE: N/A
CHECK DATE: 0/00/0000 THRU 99/99/9999

PRINT OPTIONS

PRINT DATE: Check Date
SEQUENCE: By Vendor Sort
DESCRIPTION: Item
GL ACCTS: NO
REPORT TITLE: COUNCIL REPORT
SIGNATURE LINES: 2

PACKET OPTIONS

INCLUDE REFUNDS: YES
INCLUDE OPEN ITEM:NO

BANK	CHECK#	CK DATE/ UNPOST DATE	VENDOR	CHECK AMOUNT/ DISC. AMOUNT	ID	DESCRIPTION	ITEM AMOUNT	G/L ACCOUNT	DISTRIBUTION
AP1	323795	5/01/2025	01-4079	8,996.87		EMPOWER RETIREMENT			
		5/01/2025		0.00					
					2025042433/28/2025	DFCMP/ROTH	8,996.87		
NOTE: ITEM DISPOSITION SELECTED WAS TO LEAVE ITEM IN THE SYSTEM TO BE PAID ON ANOTHER CHECK									
								001-10101	8,996.87
								001-20100	8,996.87CR
AP1	323796	5/01/2025	01-4345	82.60		HIRE LEVEL HCM INC			
		5/01/2025		0.00					
					202504243MAR14	COUNCIL PAYROLL	82.60		
NOTE: ITEM DISPOSITION SELECTED WAS TO LEAVE ITEM IN THE SYSTEM TO BE PAID ON ANOTHER CHECK									
								001-10101	82.60
								001-20100	82.60CR
AP1	323797	5/01/2025	01-4345	272.14		HIRE LEVEL HCM INC			
		5/01/2025		0.00					
					2025042433/14/25	PAYROLL SERVI	272.14		
NOTE: ITEM DISPOSITION SELECTED WAS TO LEAVE ITEM IN THE SYSTEM TO BE PAID ON ANOTHER CHECK									
								001-10101	272.14
								001-20100	272.14CR
AP1	323798	5/01/2025	01-4345	337.79		HIRE LEVEL HCM INC			
		5/01/2025		0.00					
					202504243MAR 25	CITY PAYROLL I	337.79		
NOTE: ITEM DISPOSITION SELECTED WAS TO LEAVE ITEM IN THE SYSTEM TO BE PAID ON ANOTHER CHECK									
								001-10101	337.79
								001-20100	337.79CR
AP1	323799	5/01/2025	01-4345	82.60		HIRE LEVEL HCM INC			
		5/01/2025		0.00					
					2025042433/14/25	MAYOR COUNCIL	82.60		
NOTE: ITEM DISPOSITION SELECTED WAS TO LEAVE ITEM IN THE SYSTEM TO BE PAID ON ANOTHER CHECK									
								001-10101	82.60
								001-20100	82.60CR
AP1	323800	5/01/2025	01-4345	125.87		HIRE LEVEL HCM INC			
		5/01/2025		0.00					
					2025042434/15/25	MAYOR/COUNCIL	125.87		
NOTE: ITEM DISPOSITION SELECTED WAS TO LEAVE ITEM IN THE SYSTEM TO BE PAID ON ANOTHER CHECK									
								001-10101	125.87
								001-20100	125.87CR

BANK	CHECK#	CK DATE/ UNPOST DATE	VENDOR	CHECK AMOUNT/ DISC. AMOUNT	ID	DESCRIPTION	ITEM AMOUNT	G/L ACCOUNT	DISTRIBUTION
AP1	323801	5/01/2025	01-4530	7,228.16		WV PERS (CPRB)			
		5/01/2025		0.00					
					202504243	FEB 2025 MPFRS PAYMEN	7,228.16		
NOTE: ITEM DISPOSITION SELECTED WAS TO LEAVE ITEM IN THE SYSTEM TO BE PAID ON ANOTHER CHECK									
								001-10101	7,228.16
								001-20100	7,228.16CR
AP1	323802	5/01/2025	01-4530	27,092.72		WV PERS (CPRB)			
		5/01/2025		0.00					
					202504243	FEB 2025 PERS PAYMENT	27,092.72		
NOTE: ITEM DISPOSITION SELECTED WAS TO LEAVE ITEM IN THE SYSTEM TO BE PAID ON ANOTHER CHECK									
								001-10101	27,092.72
								001-20100	27,092.72CR

*** REPORT TOTALS ***

		CASH	DISCOUNT
TOTAL REVERSED TO A/P:	8	44,218.75	0.00
TOTAL REVERSED COMPLETELY:	0	0.00	0.00
*** GRAND TOTALS *** :	8	44,218.75	0.00

*** POSTING PERIOD RECAP ***

FUND	POSTING PERIOD	DEBITS	CREDITS
001	5/2025	44,218.75	44,218.75CR

*** G/L RECAP ***

G/L ACCOUNT	ACCOUNT NAME	DISTRIBUTION
001-10101	CASH-OPERATING GEN FUND2792	44,218.75
001-20100	Accounts Payable	44,218.75CR

*** NO ERRORS ***

*** END OF REPORT ***

VENDOR SORT KEY	DATE	DESCRIPTION	FUND	DEPARTMENT	AMOUNT
BLACK STONE ROOFING LLC	5/01/25	OVERPMNT BL	GENERAL FUND	TREASURER'S OFFICE	265.00
				TOTAL:	265.00
CARICATURE ARTISTS GROUP LLC	5/01/25	CARICATURE ARTIST/ WVFEST	GENERAL FUND	FAIR ASSOC/FESTIVAL	1,215.00
				TOTAL:	1,215.00
CHARLES TOWN BUILDING COMMISSION	5/01/25	APRIL 25 CH&PD&CTUB RENT	GENERAL FUND	CITY HALL	16,667.00
	5/01/25	APRIL 25 CH&PD&CTUB RENT	GENERAL FUND	CITY HALL	2,550.00
	5/01/25	APRIL 25 CH&PD&CTUB RENT	GENERAL FUND	POLICE DEPARTMENT	7,840.98
				TOTAL:	27,057.98
CHARLES TOWN UTILITY BOARD	5/01/25	PD 3/26 WATER DELIVERY	GENERAL FUND	POLICE DEPARTMENT	122.90
				TOTAL:	122.90
FIRST-CITIZENS BANK & TRUST CO	5/01/25	APRIL25 2ND FLOOR PLOTTER	GENERAL FUND	CITY HALL	506.12
	5/01/25	APRIL25 1ST FLOOR COPIER	GENERAL FUND	CITY HALL	239.68
				TOTAL:	745.80
FRONTIER, INC.	5/01/25	4/25 CH ELEVATOR	GENERAL FUND	CITY HALL	71.34
	5/01/25	4/24-5/23 PD PHONE SERV	GENERAL FUND	POLICE DEPARTMENT	67.55
				TOTAL:	138.89
JOHNSON CONTROLS SECURITY SOLUTIONS	5/01/25	RH ALARM 5/01-7/31/25	GENERAL FUND	CITY HALL	385.68
				TOTAL:	385.68
KONE INC.	5/01/25	CH ELEVATOR REPAIR 4/14	GENERAL FUND	STREETS & HIGHWAYS	269.14
				TOTAL:	269.14
LUPIS TONY	5/01/25	OVERPMT 25000047	GENERAL FUND	CITY CLERK'S OFFICE	12.00
				TOTAL:	12.00
T-MOBILE	5/01/25	3/21-4/20 CELL SERVICE	GENERAL FUND	ECONOMIC DEVELOPMENT	31.99
	5/01/25	3/21-4/20 CELL SERVICE	GENERAL FUND	CITY MANAGER'S OFFICE	42.09
	5/01/25	3/21-4/20 CELL SERVICE	GENERAL FUND	CITY ATTORNEY	17.85
	5/01/25	3/21-4/20 CELL SERVICE	GENERAL FUND	ENFORCEMENT AGENCY	17.85
	5/01/25	3/21-4/20 CELL SERVICE	GENERAL FUND	PLANNING & ZONING	61.45
	5/01/25	3/21-4/20 CELL SERVICE	GENERAL FUND	CITY HALL	31.99
	5/01/25	3/21-4/20 CELL SERVICE	GENERAL FUND	POLICE DEPARTMENT	64.88-
	5/01/25	3/21-4/20 CELL SERVICE	GENERAL FUND	STREETS & HIGHWAYS	58.85
				TOTAL:	197.19
TYLER TECHNOLOGIES, INC	5/01/25	UTILIY BILING SMS/CALLS	GENERAL FUND	TREASURER'S OFFICE	336.50
	5/01/25	UTILIY BILING SMS/CALLS	GENERAL FUND	TREASURER'S OFFICE	156.00-
	5/01/25	INSITE TRANS FEES CC	GENERAL FUND	TREASURER'S OFFICE	3.75
				TOTAL:	184.25

VENDOR SORT KEY	DATE	DESCRIPTION	FUND	DEPARTMENT	AMOUNT

========== FUND TOTALS ==========

001 GENERAL FUND	30,593.83
GRAND TOTAL:	30,593.83

TOTAL PAGES: 2

APPROVED BY: _____

APPROVED BY: _____

SELECTION CRITERIA

SELECTION OPTIONS

VENDOR SET:	01-City of Charles Town
VENDOR:	All
CLASSIFICATION:	All
BANK CODE:	Exclude: CAP1
ITEM DATE:	0/00/0000 THRU 99/99/9999
ITEM AMOUNT:	99,999,999.00CR THRU 99,999,999.00
GL POST DATE:	0/00/0000 THRU 99/99/9999
CHECK DATE:	5/01/2025 THRU 5/01/2025

PAYROLL SELECTION

PAYROLL EXPENSES:	NO
EXPENSE TYPE:	N/A
CHECK DATE:	0/00/0000 THRU 99/99/9999

PRINT OPTIONS

PRINT DATE:	Check Date
SEQUENCE:	By Vendor Sort
DESCRIPTION:	Item
GL ACCTS:	NO
REPORT TITLE:	COUNCIL REPORT
SIGNATURE LINES:	2

PACKET OPTIONS

INCLUDE REFUNDS:	YES
INCLUDE OPEN ITEM:	NO

VENDOR SORT KEY	DATE	DESCRIPTION	FUND	DEPARTMENT		AMOUNT
AC & T CO., INC	5/01/25	3/13 TO 4/10 JMP PT SERV	PARKS & REC	PARKS & REC		289.00
					TOTAL:	289.00
CHET HINES	5/01/25	HR MOWER FUEL 04/22	PARKS & REC	PARKS & REC		7.51
	5/01/25	HR MOWER FUEL 4/29	PARKS & REC	PARKS & REC		11.16
					TOTAL:	18.67

========== FUND TOTALS ==========

207	PARKS & REC	307.67
	GRAND TOTAL:	307.67

TOTAL PAGES: 1

APPROVED BY: _____

APPROVED BY: _____

SELECTION CRITERIA

SELECTION OPTIONS

VENDOR SET: 03-CT BOARD OF P&R
VENDOR: All
CLASSIFICATION: All
BANK CODE: All
ITEM DATE: 0/00/0000 THRU 99/99/9999
ITEM AMOUNT: 99,999,999.00CR THRU 99,999,999.00
GL POST DATE: 0/00/0000 THRU 99/99/9999
CHECK DATE: 5/01/2025 THRU 5/01/2025

PAYROLL SELECTION

PAYROLL EXPENSES: NO
EXPENSE TYPE: N/A
CHECK DATE: 0/00/0000 THRU 99/99/9999

PRINT OPTIONS

PRINT DATE: Check Date
SEQUENCE: By Vendor Sort
DESCRIPTION: Item
GL ACCTS: NO
REPORT TITLE: COUNCIL REPORT
SIGNATURE LINES: 2

PACKET OPTIONS

INCLUDE REFUNDS: YES
INCLUDE OPEN ITEM:NO

VENDOR SORT KEY	DATE	DESCRIPTION	FUND	DEPARTMENT	AMOUNT
City of Charles Town	5/01/25	PENSION FUND OWED TO GF	POLICE PENSION	NON-DEPARTMENTAL	748.46
				TOTAL:	748.46

========== FUND TOTALS ==========

700	POLICE PENSION	748.46
	GRAND TOTAL:	748.46

TOTAL PAGES: 1

APPROVED BY: _____

APPROVED BY: _____

SELECTION CRITERIA

SELECTION OPTIONS

VENDOR SET:	07-CT BOT FOR POLICE PENSION
VENDOR:	All
CLASSIFICATION:	All
BANK CODE:	All
ITEM DATE:	0/00/0000 THRU 99/99/9999
ITEM AMOUNT:	99,999,999.00CR THRU 99,999,999.00
GL POST DATE:	0/00/0000 THRU 99/99/9999
CHECK DATE:	5/01/2025 THRU 5/01/2025

PAYROLL SELECTION

PAYROLL EXPENSES:	NO
EXPENSE TYPE:	N/A
CHECK DATE:	0/00/0000 THRU 99/99/9999

PRINT OPTIONS

PRINT DATE:	Check Date
SEQUENCE:	By Vendor Sort
DESCRIPTION:	Item
GL ACCTS:	NO
REPORT TITLE:	COUNCIL REPORT
SIGNATURE LINES:	2

PACKET OPTIONS

INCLUDE REFUNDS:	YES
INCLUDE OPEN ITEM:	NO

City Council
101 East Washington Street
Charles Town, WV 25414

Meeting: 05/05/25
Department: City Council
Category: Report
Initiator:

SCHEDULED

AGENDA ITEM (ID #)

2025-525: Signed Resolution with Division of Highways

ATTACHMENTS:

- Complete_with_Docusign_1_Wright_Denny_Inter.pdf

Docusign Envelope ID: 4FA78E55-74FD-402B-A7B0-7A1F849352FD

ROUTING

WEST VIRGINIA DEPARTMENT OF TRANSPORTATION

Division of Highways

1900 Kanawha Boulevard East • Building Five • Room 110
Charleston, West Virginia 25305-0430 • (304) 558-3505

Stephen T. Rumbaugh, P. E.
Secretary of Transportation
Commissioner of Highways

March 5, 2025

Originated By: OS Date: 3/5/2025		
ORDER	CODE	INITIAL
1	OS	TJWP
2	HO	JMB
3	SEC	STR

Dr. Chuck Bishop
Superintendent
Jefferson County Board of Education
110 Mordington Avenue
Charles Town, West Virginia 25414

The Honorable Bob Trainor
Mayor, City of Charles Town
101 East Washington Street
Charles Town, West Virginia 25414

Dear Superintendent Bishop and Mayor Trainor:

Attached is a proposed two-party agreement between the West Virginia Division of Highways (WVDOH) and the Jefferson County Board of Education for the installation of School Area Traffic Control (School Zone Flashers) at Wright Denny Intermediate in Charles Town.

Please review the agreement carefully and, if acceptable, please sign where indicated.

The agreement sets forth the joint responsibilities of the Jefferson County Board of Education, the city of Charles Town, and the WVDOH regarding establishing and maintaining the above reference project. Once your office signs the contract it will be directly routed for execution by the WVDOH. After all officials have affixed the necessary signatures, you will receive one fully executed agreement for your files via email from DocuSign.

Should you have any questions regarding this matter, please contact Tom Hammonds of our office at (304) 414-7337.

Sincerely,

Stephen T. Rumbaugh, P. E.
Secretary of Transportation/
Commissioner of Highways

STR:Hb

E.E.O./AFFIRMATIVE ACTION EMPLOYER

Docusign Envelope ID: 4FA78E55-74FD-402B-A7B0-7A1F849352FD

WEST VIRGINIA DEPARTMENT OF TRANSPORTATION
Division of Highways
1900 Kanawha Boulevard East • Building Five • Room 110
Charleston, West Virginia 25305-0430 • (304) 558-3505

Stephen T. Rumbaugh, P. E.
Secretary of Transportation
Commissioner of Highways

March 5, 2025

Dr. Chuck Bishop
Superintendent
Jefferson County Board of Education
110 Mordington Avenue
Charles Town, West Virginia 25414

The Honorable Bob Trainor
Mayor, City of Charles Town
101 East Washington Street
Charles Town, West Virginia 25414

Dear Superintendent Bishop and Mayor Trainor:

Attached is a proposed two-party agreement between the West Virginia Division of Highways (WVDOH) and the Jefferson County Board of Education for the installation of School Area Traffic Control (School Zone Flashers) at Wright Denny Intermediate in Charles Town.

Please review the agreement carefully and, if acceptable, please sign where indicated.

The agreement sets forth the joint responsibilities of the Jefferson County Board of Education, the city of Charles Town, and the WVDOH regarding establishing and maintaining the above reference project. Once your office signs the contract it will be directly routed for execution by the WVDOH. After all officials have affixed the necessary signatures, you will receive one fully executed agreement for your files via email from DocuSign.

Should you have any questions regarding this matter, please contact Tom Hammonds of our office at (304) 414-7337.

Sincerely,

Stephen T. Rumbaugh, P. E.
Secretary of Transportation/
Commissioner of Highways

STR:Hb

Docusign Envelope ID: 4FA78E55-74FD-402B-A7B0-7A1F849352FD

RESOLUTION OF THE COUNCIL OF THE CITY OF CHARLES TOWN, WEST VIRGINIA, AUTHORIZING EXECUTION OF AN AGREEMENT WITH THE WEST VIRGINIA DEPARTMENT OF TRANSPORTATION, DIVISION OF HIGHWAYS, WITH REGARD TO ESTABLISHMENT AND MAINTENANCE OF A SCHOOL AREA TRAFFIC CONTROL SYSTEM WITHIN THE MUNICIPAL LIMITS OF THE CITY OF CHARLES TOWN, JEFFERSON COUNTY, WEST VIRGINIA.

BE IT RESOLVED BY THE CITY OF CHARLES TOWN, JEFFERSON COUNTY, WEST VIRGINIA, AS FOLLOWS:

1. That the Mayor of the City of Charles Town, West Virginia, a Municipal Corporation, be and is hereby authorized to execute, to have acknowledged, and to have delivered on behalf of said City, an agreement, a copy of which is attached hereto and made a part hereof, with the West Virginia Department of Transportation, Division of Highways, with regard to the establishment and maintenance of a school area traffic control system within the Corporate Limits of said City; and

2. That the City Clerk and Recorder do properly attest the signature of said officials and affix the seal of the City to said agreement.

On motion made by Elizabeth Ricketts and seconded by Jeff Hynes, the City Council of Charles Town, West Virginia, does hereby approve and authorize the adoption of said Resolution.

STATE OF WEST VIRGINIA
COUNTY OF JEFFERSON
CITY OF CHARLES TOWN

I, John Nissel, City Clerk and Recording Officer of said Municipality, do hereby certify that the foregoing are true copies from the records of order made and entered into by the Council of said Municipality on the 21 day of April, 20 25.

John Nissel
City Clerk and Recording Officer

Docusign Envelope ID: 4FA78E55-74FD-402B-A7B0-7A1F849352FD
Docusign Envelope ID: B73EC3D2-FD00-4BCC-A481-963F1B730457

AGREEMENT

STATE PROJECT: U399-SCH/OL-23.00
SCHOOL AREA TRAFFIC CONTROL
WRIGHT DENNY INTERMEDIATE
JEFFERSON COUNTY

THIS AGREEMENT, made and entered into this _____ day of _____ 20___, by and between the **WEST VIRGINIA DEPARTMENT OF TRANSPORTATION, DIVISION OF HIGHWAYS,** hereinafter referred to as **"DEPARTMENT"** and Jefferson County Board of Education hereinafter referred to as **"SCHOOL BOARD."**

WITNESS that,

WHEREAS, DEPARTMENT and **SCHOOL BOARD** desire to cooperate in accomplishing the installation of School Area Traffic Control through the performance of the work referenced in Attachment A, attached hereto and made a part hereof, and hereinafter referred to as "the Project"; and

WHEREAS, DEPARTMENT considers it to be public interest to cooperate with **SCHOOL BOARD** to facilitate the installation of School Area Traffic Control devises as it pertains to the State Highway System

NOW THEREFORE, for and in consideration of the faithful performance of each party of the mutual agreements hereinafter set forth, the parties hereto agree as follows:

A. That the total eligible **PROJECT** cost as set by this Agreement is the **DEPARTMENT** approved cost estimate, which is incorporated herein and made a part hereof by reference. The amount of funds available for reimbursement from **DEPARTMENT** shall be one hundred percent (100%) of the funds expended by **SCHOOL BOARD** for eligible **PROJECT** costs, up to the **DEPARTMENT** approved cost estimate. **SCHOOL BOARD** will also be responsible for all costs in excess of the total eligible **PROJECT** cost as set by this Agreement.

Docusign Envelope ID: 4FA78E55-74FD-402B-A7B0-7A1F849352FD
Docusign Envelope ID: B73EC3D2-FD00-4BCC-A481-963F1B730457

B. That the following items may be included in the Scope of Work, as necessary: Installation of School Area Traffic Control including Flashing Beacons on each approach of the approved School Zone, which must be established in accordance with applicable law, and approved by **DEPARTMENT**. **SCHOOL BOARD** shall obtain from a qualified vendor(s) bid specification documents as needed and shall submit such specifications to **DEPARTMENT** for review and approval prior to any work performed by **SCHOOL BOARD** hereunder. The specification shall also indicate the work, if any, done by the **SCHOOL BOARD'S** own forces.

C. That **SCHOOL BOARD** may submit invoices and/or "Force Account" documentation to **DEPARTMENT**, on no more often than a monthly basis, for up to one hundred percent (100%) reimbursement of eligible **PROJECT** costs. **SCHOOL BOARD** shall certify that the invoices/documents properly represent approved work that has been satisfactorily completed and paid for by **SCHOOL**. Each invoice and/or force Account documentation must be accompanied by an up-to-date progress report detailing work undertaken and percentage of completion that reflects the reimbursement sought. **DEPARTMENT**, may at its sole option, inspect the work prior to payment.

D. **SCHOOL BOARD**, shall be responsible for all maintenance of all work and equipment performed or installed hereunder at the sole cost of **SCHOOL BOARD.**

E. The following attachment(s) is incorporated herein and made a part hereof as though fully set out herein: Attachment A-1 – "School Area Traffic Control Program General Clauses and Covenants (December 2017)."

F. The maximum amount that the **DEPARTMENT** will reimburse the **SCHOOL BOARD** will be Thirty Thousand Dollars ($30,000).

(Remainder of page intentionally left blank)

Docusign Envelope ID: 4FA78E55-74FD-402B-A7B0-7A1F849352FD
Docusign Envelope ID: B73EC3D2-FD00-4BCC-A481-963F1B730457

IN WITNESS WHEREOF, the parties hereto have caused their respective names to be signed by their duly authorized officers.

WEST VIRGINIA DEPARTMENT OF TRANSPORTATION, DIVISION OF HIGHWAYS

By_____

Its Secretary of Transportation/Commissioner of Highways

JEFFERSON COUNTY BOARD OF EDUCATION

By_____

Its Superintendent

APPROVED AS TO FORM THIS DATE (MDY) 3/6/2025

ATTORNEY LEGAL DIVISION
WEST VIRGINIA DEPARTMENT OF TRANSPORTATION
DIVISION OF HIGHWAYS

Christopher Amos

NUMBER: 2503009

Docusign Envelope ID: 4FA78E55-74FD-402B-A7B0-7A1F849352FD
Docusign Envelope ID: B73EC3D2-FD00-4BCC-A481-963F1B730457

ATTACHMENT A -1

SCHOOL AREA TRAFFIC CONTROL PROGRAM

GENERAL CLAUSES AND COVENANTS

(December 2017)

1. **SCHOOL**, by signature on the attached Agreement, confirms that it has the ability, including the financial capability to ensure proper planning, management, execution and completion of the **PROJECT.**

2. **SCHOOL** shall not begin work, or cause any work to begin, for which costs **SCHOOL** intends to seek reimbursement, until such time that **SCHOOL** receives written notice to proceed from **DEPARTMENT**.

3. **SCHOOL** is responsible for **PROJECT** oversight and inspection during all phases of construction, as well as for obtaining all necessary permits. **SCHOOL** shall maintain competent and adequate engineering supervision at the construction site during the **PROJECT** to ensure that the completed work conforms to the **DEPARTMENT** approved plans and specifications and shall promptly furnish progress reports and/or such other similar information as may be required by **DEPARTMENT.**

4. **SCHOOL** shall indemnify and hold harmless the **DEPARTMENT**, its officers and employees from any and all suits, claims, liability, losses, liens and demands, fines, costs, criminal and civil penalties, causes of action or any other obligation, including but not limited to attorney's fees and costs of investigations, arising out of or in any manner connected with the work performed by the **SCHOOL**, its agents, employees or contractors, under this Agreement, during or any time after such work is being or has been performed, including (without limitation) liability involving bodily injury, death, property damage or any violation or alleged violation of any Federal, State or local law or regulation, except for any liability or damages due to the willful or intentional unlawful acts or the negligence of the Department or its employees.

5. **SCHOOL** shall comply and ensure compliance by its contractors with all applicable local, state, and federal laws, rules, regulation, ordinances, decrees, orders and permits.

6. **SCHOOL** agrees to maintain a proper accounting system for the work performed hereunder in accordance with generally accepted accounting standards or agency directives, and shall be responsible for ensuring that its consultant(s) and subcontractor(s) maintain all books, document papers, records, supporting cost proposals, accounting records, employees timecards, payroll records and other evidence pertaining to costs incurred in the **PROJECT. SCHOOL** shall make such records available at all reasonable times during the contract period and for four (4) years after the date of **DEPARTMENT'S** closing of the **PROJECT**, for inspection and/or audit by **DEPARTMENT**, Federal Highway Administration, or any other authorized representative of either the State or Federal government.

Docusign Envelope ID: 4FA78E55-74FD-402B-A7B0-7A1F849352FD
Docusign Envelope ID: B73EC3D2-FD00-4BCC-A481-963F1B730457

7. **SCHOOL**, unless otherwise provided in the Agreement, agrees to complete **PROJECT** within one (1) year after the date the notice to proceed is issued by **DEPARTMENT**. If **SCHOOL** fails to meet this deadline, **DEPARTMENT** may terminate participation in this **PROJECT** upon written notice to **SCHOOL** and the rights to any remaining funds hereunder shall be forfeited by **SCHOOL**; repayment by **SCHOOL** of the **PROJECT'S** federal funding may also be required by **DEPARTMENT**. It is the express responsibility of **SCHOOL** to inform **DEPARTMENT**, in an expeditious manner, if any condition arises which may result in this deadline not being met.

8. **SCHOOL** must retain a copy of the contract for the consultant(s) and/or contractor(s)/subcontractor(s) chosen. To ensure compliance with requirements, all bid documents and request for proposal/consultant documents must be kept on file by **SCHOOL** pending final audit by **DEPARTMENT**.

9. **SCHOOL** shall notify and shall furnish **PROJECT** plans to utilities known to have facilities within the **PROJECT** limits and/or affected by the **PROJECT** and shall arrange for any necessary relocation or adjustment of affected utilities at the sole cost of School Board.

10. **SCHOOL** shall acquire all property and/or right-of-way necessary to construct this **PROJECT** at the sole cost of School Board.

11. **DEPARTMENT** shall bear one hundred percent (100%) of all administrative costs incurred by **DEPARTMENT**.

12. **SCHOOL** acknowledges and agrees that the established school zone is for primary and secondary education facilities only, Kindergarten – twelfth grade (K-12); and if purpose of facility changes, the **DEPARTMENT** will be notified in writing within three (3) business days.

Docusign Envelope ID: 4FA78E55-74FD-402B-A7B0-7A1F849352FD

FILE

WEST VIRGINIA DEPARTMENT OF TRANSPORTATION
Division of Highways
1900 Kanawha Boulevard East • Building Five • Room 110
Charleston, West Virginia 25305-0430 • (304) 558-3505

Stephen T. Rumbaugh, P. E.
Secretary of Transportation
Commissioner of Highways

February 27, 2025

Originated By: TH		
Date:		
NAME	INITIAL	DATE
TW	TWW	3/3/2025
TH	TH	2/28/2025

Dr. Chuck Bishop
Superintendent
Jefferson County Board of Education
110 Mordington Avenue
Charles Town, West Virginia 25414

The Honorable Bob Trainor
Mayor, City of Charles Town
101 East Washington Street
Charles Town, West Virginia 25414

Dear Superintendent Bishop and Mayor Trainor:

Attached is a proposed two-party agreement between the West Virginia Division of Highways (WVDOH) and the Jefferson County Board of Education for the installation of School Area Traffic Control (School Zone Flashers) at Wright Denny Intermediate in Charles Town.

Please review the agreement carefully and, if acceptable, please sign where indicated.

The agreement sets forth the joint responsibilities of the Jefferson County Board of Education, the city of Charles Town, and the WVDOH regarding establishing and maintaining the above reference project. Once your office signs the contract it will be directly routed for execution by the WVDOH. After all officials have affixed the necessary signatures, you will receive one fully executed agreement for your files via email from DocuSign.

Should you have any questions regarding this matter, please contact Tom Hammonds of our office at (304) 414-7337.

Sincerely,

Stephen T. Rumbaugh, P. E.
Secretary of Transportation/
Commissioner of Highways

STR:Hb

City Council
101 East Washington Street
Charles Town, WV 25414

Meeting: 05/05/25
Department: City Council
Category: Report
Initiator:

SCHEDULED

AGENDA ITEM (ID #)

2025-526: Arbor Day Proclamation

ATTACHMENTS:

- Arbor Day 2025 Proclamation.pdf

City of Charles Town Arbor Day Proclamation

WHEREAS, in 1872, J. Sterling Morton proposed to the Nebraska Board of Agriculture that a special day be set aside for the planting of trees; and

WHEREAS, this holiday, called Arbor Day, was first observed with the planting of more than a million trees in Nebraska; and

WHEREAS, Arbor Day is now observed throughout the nation and the world; and

WHEREAS, trees can reduce the erosion of our precious topsoil by wind and water, cut heating and cooling costs, moderate the temperature, clean the air, produce life-giving oxygen, and provide habitat for wildlife; and

WHEREAS, trees are a renewable resource giving us paper, wood for our homes, fuel for our fires, and countless other wood products; and

WHEREAS, trees in our city increase property values, enhance the economic vitality of business areas, and beautify our community; and

WHEREAS, the National Arbor Day Foundation, in cooperation with the National Association of State Foresters and the USDA Forest Service, has named the City of Charles Town as a **Tree City USA** for the 13th cumulative year; and

NOW, THEREFORE, I Robert M. Trainor, Mayor of the City of Charles Town, WV, do hereby proclaim April 25, 2025 as **ARBOR DAY** in the City of Charles Town, and urge all citizens to celebrate Arbor Day and support efforts to protect our trees and woodlands; and

FURTHER, I urge all citizens to plant trees to gladden the heart and promote the wellbeing of this and future generations.

Adopted this 21st day of April, 2025.

Robert M. Trainor
Mayor

Attest:

John Nissel
City Clerk

City Council
101 East Washington Street
Charles Town, WV 25414

Meeting: 05/05/25
Department: City Council
Category: Report
Initiator:

SCHEDULED

AGENDA ITEM (ID #)

2025-527: Charles Town Utility Board Meeting Minutes - April 9, 2025

ATTACHMENTS:
- 2025.04.09 UB MINUTES .pdf

Charles Town Utility Board
Regular Board Meeting
April 9, 2025

The Charles Town Utility Board held a regular meeting on April 9, 2025 at 4:00 P.M. Members of the Board present were John Nissel, Chairman; John Maxey, Vice Chairman; Heidi Parker, Board Member; and Patrick Kratovil, Board Member. Also present were Kristen Stolipher, Utility Manager; Ashley Stottlemyer, Secretary; Richard Lewis, Environmental Legal Counsel (Zoom) and Pasha Majdi, County Commission Liaison (Zoom).

Mr. Pierson and Mr. Rodecker were absent from the meeting.

CALL TO ORDER

The Chairman called the meeting to order at 4:00 P.M.

APPROVAL OF MINUTES

Approval of March 26, 2025 Minutes

Action: **Motion made by Mrs. Parker, second by Mr. Maxey, the Board unanimously approved the minutes.**

PUBLIC COMMENT

The Board received no public comments.

MANAGER REPORTS

Utility Manager Report

Mrs. Stolipher provided staff is continuing to work through the Utility Cloud and Edmunds software integration and preparing for CTUB Day on May 9th with a rain date of May 16th. She also mentioned the baffle wall installation is complete and the R&R project is nearing completion. Chris Eckenrode from GDF briefed the Board on various projects, including the bid opening for the chlorine room project at the water treatment plant. He mentioned one bid was received from Snyder Environmental for $388,620.00. Mr. Eckenrode will provide his recommendation at the next meeting. The Board provided discussions.

Mrs. Parker had questions about the Red Clover AMEA that is currently at the PSC for approval. Mrs. Stolipher stated the developer had minor changes to the agreement so staff revised and sent back to the PSC for approval. The Board provided discussions. Mrs. Parker requested any changes be brought to the Board's attention.

Mr. Maxey requested quarterly expense reports comparing the same quarter for the prior year for tracking purposes.

Action: **No action required by the Board.**

NEW BUSINESS

Water Model Update Presentation by Dewberry

Sam Forster from Dewberry gave a presentation on the draft Water Model Update which evaluated the hydraulic model and system demands, reviewed infrastructure and provided recommendations

for improving the system since the last report in 2019. He will issue a final report with the recommended improvement projects and a flushing protocol to consider. The Board provided discussions.

Action: **No action required by the Board.**

UNFINISHED BUSINESS

Update on WV PSC Cases - Possible Executive Session under the provision of W. VA Code 6-9a-4(b)(12) - To discuss any matter which, by express provision of federal law or state statute or rule of court is rendered confidential, or which is not considered a public record within the meaning of the freedom of information act as set forth in article one, chapter twenty-nine-b of the code.

i. 25-0263-W-C – West Virginia American Water Complaint Case

No updates for this item.

ii. 25-0079-W-PC - Sidewinder Service Agreement for Mountain Pure Development

Mrs. Stolipher mentioned the PSC is still reviewing the agreement. The Chairman suggested the Board review the draft lease as described in the agreement prior to executing the document once approved by the PSC.

The Chairman also suggested Mrs. Parker update the County Commission on both cases since she is the County representative on the Board. The Board will discuss this matter in more detail at the next meeting.

NEW BUSINESS

2022 Sewer Collection System Project – Resolution No. 6 – CIF Payment #5

Mrs. Stolipher included the pay application for Resolution No. 6 in the amount of $9,869.79 for work completed.

Action: **Motion made by Mr. Maxey, second by Mr. Kratovil, the Board unanimously approved Resolution No. 6 – CIF Payment #5.**

CEM Corporation Quote for Lab Equipment

Mrs. Stolipher provided a quote from CEM for a lab testing machine that will allow staff to perform various in-house weekly testing in the amount of $18,428.00. The existing machine is 14 years old and will be moved to the Tuscawilla treatment plant for use.

Action: **Motion made by Mrs. Parker, second by Mr. Maxey, the Board unanimously approved the CEM Corporation quote for lab equipment.**

PFAS Biosolids Testing Results

Mrs. Stolipher provided the summary pages for the four sets of results collected and analyzed by Eurofins Lancaster Laboratories Environment Testing, LLC. She stated that even though West Virginia has no regulations at this time, the results were well below thresholds set by other states. The Board provided discussions. Mrs. Stolipher will work with the PR firm to provide public notice of the results.

Action: **No action required by the Board.**

Board Policies

i. CIF Policy – Draft by Mr. Maxey
ii. Biosolids PFAS Policy – Draft by Mr. Maxey
iii. Rules of Procedure
iv. Connect and Disconnect Policy
v. Developer Policy

Mrs. Stolipher included the two policies drafted by Mr. Maxey and mentioned other policies she has been working on with Mr. Rodecker. Mr. Lewis reviewed the PFAS policy and thought it was well written. The Board provided discussions. Mr. Rodecker will review the two policies drafted by Mr. Maxey for consideration at the next board meeting.

Action: **No action required by the Board.**

MANAGER REPORTS

Chairman Report

The Chairman provided no updates.

Action: **No action required by the Board.**

APPROVAL OF BILLS

April 9, 2025

Action: **Motion made by Mrs. Parker, second by Mr. Maxey, the Board unanimously approved the payment of the bills.**

ADJOURNMENT

There being no further business at this time, the Board adjourned the meeting at 5:38 P.M.

INFORMATION ONLY

The next meeting is scheduled for Wednesday, April 23, 2025 at 4:00 P.M. at 661 S. George Street.

John Nissel
Chairman

Ashley Stottlemyer
Secretary

City Council
101 East Washington Street
Charles Town, WV 25414

Meeting: 05/05/25
Department: City Council
Category: Report
Initiator:

SCHEDULED

AGENDA ITEM (ID #)

2025-528: Finance Policy

ATTACHMENTS:

- Finance Policy Revised.pdf

CITY OF CHARLES TOWN

BUDGET AND FISCAL POLICIES

Approved: August 19, 2019

Revised: April 6, 2022

TABLE of CONTENTS

1.01 GENERAL BUDGET AND FISCAL POLICIES GUIDING PRINCIPLES 4

1.01.A Responsibility *5*

1.01.B Revenues *5*

1.02 ASSET MANAGEMENT POLICY 6

1.02.A Responsibility of Department Heads *6*

1.02.B Asset Identification *6*

1.02.C Additions *6*

1.02.D Deletions *7*

1.03 BUDGET AND PROCEDURES POLICY 8

1.03.A Capital Improvements Program *9*

1.04 RECORDS MANAGEMENT AND RETENTION POLICY 10

1.04.A Administration *10*

1.04.B Suspension of Record Disposal in the Event of Litigation or Claims *10*

1.04.C Applicability *10*

1.05 FUND BALANCE POLICY 11

1.05.A Purpose *11*

1.05.B Definitions and Provisions *11*

1.05.C Restricted Fund Balance *12*

1.05.D Committed Fund Balance *12*

1.05.E Assigned Fund Balance *12*

1.05.F Unassigned Fund Balance *13*

1.05.G Fund Descriptions *13*

1.05.G.(i) Governmental Funds *13*

1.06 INVESTMENT POLICY 15

1.06.A Scope *15*

1.06.B Prudence *15*

1.06.C Objective *15*

1.06.D Delegation of Authority *15*

1.06.E Ethics and Conflicts of Interest *16*

1.06.F Authorized Investments and Limitations on Investments *16*

1.06.G Safekeeping and Custody *16*

1.06.H Reporting and Requirements *16*

1.07 LONG-TERM DEBT POLICY 17

1.07.A General Practices *17*

1.08 PETTY CASH POLICY 19

1.08.A General Principles and Practices *19*
1.09 PURCHASING AND BID POLICY 21
1.10 Invoice Processing Policy 22
1.11 GLOSSARY OF DEFINITIONS AND TERMS 24
4.01 APPENDIX A – RECORDS MANAGEMENT AND RETENTION 27

1.01 GENERAL BUDGET AND FISCAL POLICIES GUIDING PRINCIPLES

The policies outlined in this document apply to all City employees and departments, except for the Charles Town Utility Board, which may adopt separate policies. These policies supersede any previously issued policies dealing with the subjects discussed herein. The City reserves the right to modify or supplement the provisions of this policy document at any time. Please understand that no policy document can address every situation in the workplace. Employees should ask your direct supervisor or the accounting manager if you have any questions. Likewise, if an employee has any suggestions for improving the City's fiscal and financial policies, please let the accounting manager or the city manager know. The City encourages its staff to always be searching for opportunities for continuous improvement.

The objectives for comprehensive budget and fiscal policies are to:

- guide City Council and city management policy decisions that have significant fiscal impact;
- support planning for long-term needs;
- maintain and protect City assets and infrastructure;
- set forth operating principles that minimize the financial risk in providing City services;
- optimize the efficiency and effectiveness of services to reduce costs and improve service quality;
- employ balanced and fair revenue policies that provide adequate funding for desired programs;
- adopt a pay-as-you-go philosophy to budgeting for operating expenses and, to the extent possible and practical, for capital expenditures;
- maintain financial stability and sufficient financial capacity for present and future needs;
- promote sound budget and financial management practices by providing accurate and timely information on the City's financial condition;
- maintain and enhance the City's credit ratings and prevent default on any municipal financial obligations;
- ensure the legal use of financial resources through an effective system of internal controls; and
- promote cooperation and coordination within the City, with other governments, and with the private sector in the financing and delivery of services.

1.01.A Responsibility

City Council may approve the City's comprehensive financial management policies and review them at least every even-numbered year as part of the annual budgeting process. The city manager will recommend, oversee, and administer these policies. The City's accounting manager will review and implement the policies and develop financial procedures that are consistent with the policies. City department directors will ensure that their departments comply with these policies and procedures and may consult with the accounting manager to issue department-specific procedures, as needed, that are also consistent with these policies.

1.01.B Revenues

Revenues:

Strong financial reserves will allow the City to weather the normal business cycles. The objective of strong reserves will allow the City the flexibility of cutting from capital expenditures and not operations; thereby, alleviating benefits cuts, layoffs, and cuts or reduction in services.

The City recognizes that its most primary and stable revenue sources are property taxes, consumer sales taxes, and business & occupation taxes. Due to the location of Hollywood Casino, the City is also the recipient of table game and video lottery revenue, although it has not proven to be as stable as other revenue sources. Every effort should be taken to ensure that table game and video lottery revenue is allocated towards one-time capital expenditures. Efforts to ensure continued reliability on the other revenue sources must be maintained and to develop and diversify other revenue sources as applicable.

The City will actively establish a practice of monitoring, auditing, and collecting all locally generated taxes.

The City will establish and maintain all user fees and charges based on the cost of providing services and shall establish, where appropriate, a cost recovery target for those programs and services that are subsidized by General Fund revenues.

Determine staffing levels for all departments based on population size and growth and not revenue growth.

Maintain a municipal stabilization fund (i.e. Residual Fund) of approximately 16.7% of the annual operating budget to cover at least two-months' worth of operating expenses.

Maintain a municipal capital improvement account (i.e. Capital Reserve Fund) to equal the total of annual lottery revenues and utilize lottery revenues for one-time purchases such as equipment, grant matches, and repair/construction of streets.

1.02 ASSET MANAGEMENT POLICY

It is the policy of the City to maintain financial accountability over all tangible fixed assets having a life exceeding one year and costing $5,000 (including tax) or more. The asset records shall be verified by a physical inventory at least once every five years by each department. Assets in the system include all land, buildings, machinery, and equipment valued at $5,000 or more (including sales tax). Small tools and equipment valued at more than $25 or attractive items (cameras, radios, etc.) having a useful life exceeding one year and costing under $5,000 will be included in an annual physical inventory but no dollar amounts will be entered on these small or attractive items. Adequate insurance shall be maintained on all capital assets consistent with the results of the annual physical count or inspection. GASB 34: The Government Accounting Standards Board has required local governments to report infrastructure and depreciation on all capital assets.

1.02.A Responsibility of Department Heads

The City treasurer will establish a fixed assets system and prepare guidelines for inventory reviews. To provide the best possible control, the department heads responsible for assets should not be the ones doing the physical inventory. He or she should assign an employee from their staff or obtain an independent person to conduct the inventory. The department head will do a reconciliation of the resulting reports before signing and turning it in to the treasurer's office.

1.02.B Asset Identification

All property will be assigned a unique city identification number by the treasurer's office. The assigned number will follow the asset throughout its life in the City's fixed asset program. Whenever feasible, each piece of property will be tagged or marked with the city identification number. Such markings will be removed or obliterated only when the item is sold, scrapped, or otherwise disposed of.

If the asset is purchased with grant funding, the identification number will reference the grant with an identifying project code. In the case of surplusing, the contract needs to be reviewed for compliance issues. In some cases, the grant source would need to approve selling or surplusing such assets.

1.02.C Additions

The City may acquire property via purchase, construction, donation, or lease. Regardless of how it is acquired, when the property is received, the purchasing department will complete an Asset Addition Sheet, provided by the treasurer's office, and submit to the treasurer's office along with a copy of the invoice at the same time they submit it to the accounting clerk's office for payment. The treasurer's office will assign and notify the department of the city identification number. The department will tag the item with the identification number provided by the treasurer's office. The treasurer's office will input the information from the asset control sheet to the fixed asset program on the computer.

1.02.D Deletions

The disposal of city assets valued at more than $1,000 shall be liquidated pursuant to WV Code 8-12-18, unless otherwise approved by Article 202 of the Charles Town City Code.

Assets previously acquired will eventually be disposed of and need to be deleted from the fixed asset program. Deletion may be required due to a sale of the asset, scrapping, disappearance (lost or stolen), or involuntary conversion (fire, flood, etc.). Due to the monetary value, assets deleted from the fixed asset program originally valued at more than $5,000, whatever the reason, will require authorization from both the department head and the city manager. Fixed assets originally valued at less than $5,000 will require the authorization from the department head with notice to the treasurer's office.

The selling of City assets will comply with the City's surplus policy. Before disposal of a destroyed or damaged asset, the department head, and city manager if originally valued at more than $5,000, must verify that the asset is no longer of value to the City.

The department head controlling the asset is the only one in a position to trigger removal from the Fixed Asset records. Removal is accomplished by filling out an Asset Disposal Sheet, provided by the treasurer's office, and obtaining authorizing signatures from the department head on all requests and the city manager on any request concerning an asset originally valued at more than $5,000. The Asset Disposal Sheet is then forwarded to the treasurer's office and filed. A copy of the Asset Disposal Sheet is forwarded to the treasurer's office as proper notice for any disposed assets originally valued at less than $5,000.

Lost or stolen items may require additional reports. Deletions brought about as a result of natural disasters may require reporting to the insurance provider for an eventual reimbursement.

1.03 BUDGET AND PROCEDURES POLICY

The City will develop and implement a budget process that achieves the following policy objectives:

- makes prudent use of the taxpayers' money;
- includes financial forecast information to ensure that the City is planning adequately for current and future needs;
- involves community members, elected officials, employees, and key stakeholders as appropriate;
- provides performance measurement data to assist in assessing program effectiveness; and
- complies with City charter, City code, and State of West Virginia laws.

The City Council shall adopt an annual balanced budget each fiscal year that runs from July 1 through June 30. A balanced budget requires current year operating expenses and transfers for debt service to be fully funded by current year revenues, unassigned carryover balances, and other designated available funding sources.

All other fund balance reserves should be used only for non-recurring "one-time" and capital projects. They should not be used for on-going operations.

Long-term debt will be limited to capital projects or special projects that cannot be financed from current revenues.

The city manager is authorized to implement the programs as approved in the adopted budget. Within a specific fund, the city manager may transfer appropriations between categories within a department, as needed, to implement the adopted budget if the transfer does not increase full time equivalent (FTE) positions, increase overall appropriations, or decrease appropriations for capital outlay.

The annual budget will include a nominal Designated Contingency of up to one-half of one percent of the total operating budget for nonrecurring, unanticipated and/or emergency expenditures. The city manager may approve expenditures from this contingency if needed during the fiscal year.

A capital outlay (fixed asset) purchase will be any single item or piece of equipment which costs more than $10,000 and has an expected useful life exceeding one year.

Regular budget reports and updates shall be presented to the City's finance committee with information on the status of the City's financial condition. Budget adjustments and revisions may be made during the year by City Council resolution, if necessary, to reflect changes to revenues and/or expenditure projections.

The City will post on its website the annual adopted budget and applicable revisions within three business days of City Council approval.

1.03.A Capital Improvements Program

Sales tax revenues will be used primarily to pay the debt service on capital improvement projects that require a City loan. Other capital improvement projects may be funded with any of the following revenue sources:

- video lottery and table game revenues;
- available capital reserve fund balances;
- miscellaneous state and/or federal funding sources;
- excess levy revenues;
- municipal service fees;
- developer fees; and
- municipal bonds.

Utility revenues and specific capacity improvement fees may be used to fund water and wastewater projects.

The City will annually develop and update a multi-year plan for capital improvements. Future capital expenditures will be projected annually for a rolling five-year period based on projections of available funding, changing needs in the community, and replacement of aging infrastructure.

The City will coordinate development of a five-year capital plan with the preparation of the operating budget.

The annual funding for the current year of the Capital Improvements Plan shall be approved as part of the operating budget. Capital budgets are approved by project with the understanding that projects may span fiscal years and the appropriations will carry forward to the following fiscal year and the amounts carried forward will be shown in the budget for information and transparency.

Capital projects financed by bonds or other debt instruments shall be paid back within a period not to exceed the useful life of the project.

The city manager is authorized to implement the projects as approved in the adopted Capital Improvement Program. Within a specific fund, the city manager may transfer appropriations between projects as needed to implement the adopted Capital Improvement Program.

1.04 RECORDS MANAGEMENT AND RETENTION POLICY

This represents the City's policy regarding the retention and disposal of records, including the retention and disposal of electronic documents. The purpose of this policy is to ensure that necessary records and documents are adequately protected and maintained and to ensure that records that are no longer needed by the City or are of no value are discarded at the proper time. This policy also serves to assist City employees in understanding their obligations in retaining public documents - including e-mail, text files, PDF documents, and all other formatted files.

Unless otherwise noted, the City has adopted the WV Municipal Clerks and Recorders Associations' approved schedule for records management. The *Records Management and Retention Policy Guide and Procedures Manual, 1st Edition*, was approved by the association in 2013 and is attached as a reference as Appendix A. Until the manual is amended to include specific instructions regarding the treatment of emails and text messages, staff will treat these forms of communications the same as they would treat any other written public document.

1.04.A Administration

The city clerk, or designee, is the officer in charge of the administration of this policy and the implementation of processes and procedures to ensure that the records retention schedule is followed. The city clerk will also monitor state and federal laws affecting records retention, routinely review the records retention and disposal program, monitor compliance with this policy, and recommend changes to the Charles Town Finance Committee.

1.04.B Suspension of Record Disposal in the Event of Litigation or Claims

In the event the City is served with any subpoena or request for documents, or any employee becomes aware of a governmental investigation or audit concerning the City or the commencement of any litigation against or concerning City, such employee will inform the city clerk and any further disposal of documents will be suspended until such time as the city clerk, with the advice of counsel, determines otherwise. The city clerk will take such steps as are necessary to promptly inform all staff of any suspension in the further disposal of documents.

1.04.C Applicability

This policy applies to all physical records generated in the course of the City's operation, including both original documents and reproductions. It also applies to the electronic documents described above.

1.05 FUND BALANCE POLICY

The Governmental Accounting Standards Board (GASB) issued Statement No.54 Fund Balance Reporting and Governmental Fund Type Definitions in February 2009. The requirements of this statement are intended to improve financial reporting by providing five fund balance categories that will be more easily understood. The five fund balance categories are clearly defined to make the nature and extent of the constraints placed on a government's fund balance more transparent. GASB 54 requires a formal fund balance policy be adopted to fully define any constraints imposed upon the use of resources and how those constraints may be modified or eliminated.

1.05.A Purpose

The City's fund balance policy defines the five fund balance categories established by GASB and how the City will report each of the categories. The policy is establishing the City's formal commitment of a specific amount of the City's fund balance to be set aside specifically for emergency contingencies defined as a state or federal emergency or declaration of a local emergency. This amount and/or commitment may be changed with the adoption of a new fund balance policy resolution approved by the City Council. This policy also provides definitions of other categories of fund balance for financial reporting and budgeting purposes. The policy authorizes and directs the City's accounting manager to prepare financial statements which accurately categorize fund balance per Governmental Accounting Standards Board (GASB) Statement No. 54, Fund Balance Reporting and Governmental Fund Type Definitions.

1.05.B Definitions and Provisions

This Fund Balance Policy establishes the procedures for reporting unrestricted fund balance in the General Fund financial statements. Certain commitments and assignments of fund balance will help ensure accurate reporting of available resources and that there will be adequate financial resources to protect the City against unforeseen circumstances and events such as revenue shortfalls and unanticipated expenditures.

Fund balance is essentially the difference between the assets and liabilities reported in each governmental fund. There are five separate components of fund balance, each of which identifies the extent to which the City is bound to honor constraints on the specific purposes for which amounts can be spent. The components include:

- Non-spendable Fund Balance (inherently non-spendable);
- Restricted Fund Balance (externally enforceable limitations on use);
- Committed Fund Balance (self-imposed limitations on use);
- Assigned Fund Balance (limitation resulting from intended use); and
- Unassigned Fund Balance (residual net resources).

Non-spendable fund balance is not specifically addressed in this policy due to the nature of the restriction. An example of non-spendable fund balance is a reserve for prepaid expense.

1.05.C Restricted Fund Balance

Restricted fund balance is either imposed by law or constrained by grantors, contributors, or laws or regulations of other governments. An example of restricted fund balance would be a state or federal grant that can only be used for a specific purpose.

1.05.D Committed Fund Balance

The City Council, as the City's highest level of decision-making authority, may commit fund balances for specific purposes pursuant to the constraints imposed by formal actions taken, such as an ordinance or resolution. These committed amounts cannot be used for any other purpose unless the City Council removes or changes the specified use through the same type of formal action taken to establish the commitment. City Council action to commit any portion of such fund balances needs to occur within the fiscal reporting period, which will begin on July 1 and end on June 30.

1.05.E Assigned Fund Balance

Amounts that are constrained by the City's *intent* to be used for specific purposes, but are neither restricted nor committed, should be reported as assigned fund balance. Both committed and assigned fund balance classifications include amounts constrained to being used for specific purposes by actions taken by the government itself. The nature of the actions necessary to remove or modify an assignment is not as prescriptive as it is about the committed fund balance classification, resulting in the constraints imposed being more easily removed or modified than those imposed on committed fund balance. Furthermore, the nature of the actions necessary to remove or modify an assignment is not as prescriptive as those in the committed fund balance classification and the authority is not required to be the government's highest level of decision making authority but may be delegated to the city manager or the City's accounting manager.

All remaining fund balance amounts that are reported in governmental funds, other than the general fund, that are not classified as non-spendable, and are neither restricted nor committed will be reported as assigned fund balance.

Capital Reserve Fund
The City Council may assign a specific amount or percentage of unassigned fund balance at the end of the fiscal year to be transferred or reserved for transfer to the City's Capital Reserve Fund.

Contingencies
The City Council may assign a specific amount to be reserved for future appropriations to fund unanticipated costs or revenue shortfalls that were not anticipated at the adoption of the City's operating budget.

Stabilization Fund (i.e. Reserve Fund)
Funds set aside in one year for balancing the subsequent fiscal year operating budget, or to fund one-time expenditures or revenue shortfalls. By approving specific assigned amounts or percentage allocations of unassigned fund balance as part of budget adoption, the City Council would authorize the Accounting Manager to report specific assigned amounts on financial statements.

Investment Accounts
The City Council may assign a specific amount or percentage of unassigned fund balance at the end of the fiscal year to be transferred or reserved for transfer to the City's investment accounts

1.05.F Unassigned Fund Balance

Fund balance that has no current assignment or commitment.

1.05.G Fund Descriptions

The basic accounting and reporting entity for the City is a fund. A fund is an accounting entity with a self-balancing set of accounts recording cash and other financial resources, together with all related liabilities and residual equities, or fund balances, and changes therein. Funds are established for carrying on specific activities or attaining certain objectives in accordance with special regulations, restrictions, or limitations.

Funds used in government are classified into three broad categories: governmental, proprietary/enterprise, and fiduciary. Governmental funds include activities usually associated with a typical state or local government's operation (public safety, general governmental activities, etc.). Proprietary/enterprise funds are used in governments to account for activities that are operated primarily through user fees (utilities for example). Fiduciary/Trust/Agency funds are utilized in situations where the government is acting in a fiduciary capacity as a trustee or agent. The various funds are grouped in fund types and categories as follows:

1.05.G.(i) Governmental Funds

Includes activities usually associated with the governmental entities' operation (police, fire, and general governmental functions). The City's governmental funds use modified accrual accounting for both financial reporting and budgeting purposes.

General Fund
General Fund is the chief operating fund of the City. All general tax revenues and other receipts not allocated by law or some other contractual agreement to other funds are accounted for in the General Fund. Expenditures of this fund include the general operating expenses traditionally associated with governments such as administration, finance, planning, public works, and public safety.

Special Revenue
Special Revenue Funds are used to account for specific revenues that are legally restricted to expenditure for purposes and must be accounted for in a fund separate from the General Fund:

- **Agency Funds -** Agency Funds are used to account for resources held by the reporting government in a purely custodial capacity (i.e. assets equal liabilities). Agency funds typically involve only the receipt, temporary investment, and remittance of fiduciary resources to individuals, private organizations, or other governmental agencies. The City's Bond Escrow Fund is an example of this type of fund.

- **Federal and State Grants - These** funds must be utilized specifically for the core and function of the purpose of the grant award and cooperative agreement.

- **Hotel – Motel Tax –** Accounts for the City-wide 6% assessment on lodging room rentals; 50% of revenue is legally mandated to pass through to the Jefferson County Convention and Visitors Bureau (CVB), or more local CVB if appropriate. The other 50% is mandated to be passed through to other designated uses. Charles Town designates that the other 50% be allocated to the City's parks and recreation programs.

Debt Service Funds
Debt Service Funds are used to account for the acquisition of resources and payment of principal and interest on general long-term debt of the City and its related entities. The Building Commission's Lease-Purchase Bond Debt Service Fund includes bond proceeds to acquire and renovate City facilities like City hall, Charles Washington Hall, the police department/utility board headquarters, etc.

Capital Projects
Capital Project Funds are used to account for the acquisition, construction, and improvement of capital facilities other than those financed by proprietary funds.

1.06 INVESTMENT POLICY

It is the policy of the City to invest public funds in a manner that will provide the highest investment return with the maximum security while meeting the daily cash flow demands of the City and conforming to all West Virginia laws and local ordinances governing the investment of public funds.

1.06.A Scope

This investment policy applies to all the funds and investment activities under the direct authority of the City as accounted for in the City annual financial audit. Policy statements outlined in this section focus on the City's invested funds but will also apply to all other funds under the city manager's span of control unless specifically exempted by statue or ordinance.

1.06.B Prudence

Investments shall be made with judgment and care -- under circumstances then prevailing - which persons of prudence, discretion, and intelligence exercise in the management of their own affairs, not for speculation, but for investment, considering the probable safety of their capital as well as the probable income to be derived. The standard of prudence to be used by the City's investment officials shall be the "**prudent person"** standard and shall be applied in the context of managing an overall portfolio.

1.06.C Objective

The primary objectives in priority order of the City of Charles Town's investment activities shall be:

Safety
Safety of principal is the foremost objective of the investment program. Investments of the City shall be undertaken in a manner that seeks to ensure that capital losses are avoided, whether from securities default, broker-dealer default, or erosion of market value. To attain this objective, diversification is required in order that potential losses on individual securities do not exceed the income generated from the remainder of the portfolio.

Liquidity
The City's investment portfolio will remain sufficiently liquid to enable the City to meet all operating requirements that might be reasonably anticipated.

Return
The City's investment portfolio shall be designed with the objective of attaining a market rate of return throughout budgetary and economic cycles, considering the City's investment risk constraints and the cash flow characteristics of the portfolio.

1.06.D Delegation of Authority

Authority to manage the City's investment program is derived from the West Virginia Code. Management responsibility for the investment program is hereby delegated to the City manager, who may delegate such responsibility to the City's accounting manager. The City's

accounting manager will establish written procedures for the operation of the investment program consistent with this investment policy. Procedures shall include, but not limited to, references to safekeeping, wire transfer agreements, collateral/depository agreements, banking services contracts, local banking preferences, and other investment-related activities. Such procedures will include explicit delegation of authority to persons responsible for investment transactions. No person may engage in an investment transaction except as provided under the terms of this policy and the established procedures.

1.06.E Ethics and Conflicts of Interest

The City Council, city manager, and City accounting manager shall refrain from personal business activity that could conflict with proper execution of the investment program, or which could impair their ability to make impartial investment decisions. Council members, city manager and the City accounting manager shall disclose to the city clerk any material financial interests in financial institutions that conduct business within the jurisdiction, and they shall further disclose any large personal financial/investment positions that could be related to the performance of the City's portfolio. If the city manager and the city clerk roles are filled by the same person, the city manager will disclose this information to both the City Council and the accounting manager. The City's attorney/legal counsel, if necessary, and the City accounting manager shall review all disclosures made to insure there are no conflicts with any planned investment.

1.06.F Authorized Investments and Limitations on Investments

Investment of City funds is governed by W. Va. Code § 8-13-22a and § 8-13-22c.

1.06.G Safekeeping and Custody

All securities owned by the City, including collateral for repurchase agreements, shall be held in safekeeping by the City's custodian bank or a third-party bank trust department, acting as agent for the City under the terms of a custody or trustee agreement executed by the bank and by the City.

1.06.H Reporting and Requirements

The city manager shall annually render to the City's finance committee a statement of investment policy, which shall be reviewed and approved. The City Council will also review and approve any changes to the policy.

The city manager or City accounting manager will regularly provide investment account updates to the City's finance committee. At least annually, the city manager will provide the finance committee with a detailed report for each individual investment that includes:

- Description of investment instrument
- Issuer name
- Maturity date
- Purchase price
- Par value
- Current market value and the source of the valuation.

1.07 LONG-TERM DEBT POLICY

The City recognizes that it may need to enter long-term financial obligations to meet the demands of providing a high-quality level of government services to our community. The following long-term debt policy sets the considerations for issuing debt and provides guidance in the timing and structuring of long-term debt commitments by the City.

1.07.A General Practices

- The City will strive to maintain good relations with credit rating agencies, investors of the City's long-term financial obligations and those in the financial community that participate in the City's financings. The City also will strive to maintain and improve its bond rating to minimize borrowing costs and preserve access to credit.

- Bond issue proposals are to be accompanied by an analysis defining how the new issue, combined with current debt, impacts the City's debt capacity, and conformance with City's debt policies. Such analysis shall include identification of the funding source, an assessment of the ability to repay the obligation, the impact on the current budget, commitments to future budgets, maintenance and operational impact of the facility or asset to be purchased, and the impact on the City's credit rating, if any.

- The City's finance committee and City Council must review such analysis, including existing debt level, ability to pay debt service, impact on city services, and make a finding that use of debt is appropriate.

- Debt service costs (including that supported with sales tax revenues) should not exceed 25% of the City's General Fund operating revenues.

- Projects financed by a non-general fund revenue sources and specific voter approved authorizations are not subject to the recommended 25% of general fund revenue maximum debt service limit.

The City will use debt financing only for one-time capital improvement projects and specific nonrecurring equipment purchases, and only under the following circumstances:

- when the project is included in the City's adopted five-year capital improvement program (CIP) or when the project is not included in the City's adopted five-year capital improvement program (CIP), but the project is an emerging critical need whose timing was not anticipated in the five-year capital improvement program, or it is a project mandated by State or Federal requirements;

- when the project's useful life, or the projected service life of the equipment will exceed the term of the financing; and

- when there are designated General Fund revenues sufficient to service the debt, whether from project revenues, other specified and/or reserved resources, or infrastructure cost-sharing revenues.

Debt financing (other than tax and revenue anticipation notes) is not considered appropriate for any recurring purpose such as current operating and maintenance expenditures.

The City will follow all state and federal regulations and requirements related to bonds and debt financing instruments regarding bond provisions, issuance, taxation, and disclosure.

Costs incurred by the City, such as bond counsel and financial advisor fees, printing, underwriter's discount, and project design and construction costs, will be charged to the bond issue to the extent allowable by law.

The City will monitor compliance with bond covenants and adhere to federal arbitrage and disclosure regulations.

The City shall continually review outstanding obligations for opportunities to achieve debt service savings through refunding and shall pursue refinancing when economically feasible and advantageous.

1.08 PETTY CASH POLICY

A petty cash account is a sum of money set-aside for minor cash disbursements and to make change for which the issuance of a formal voucher would be impractical. Incidental expenses allowed through petty cash include but are not limited to registered mail, postage, emergency supplies, supplies not available through a vendor, parking expenses, vehicle licensing, and any one-time purchases that must be handled on a cash basis. Requests for meals, travel, and mileage related to travel should be done on an employee expense reimbursement form. All cash reimbursements for business expenses must meet the requirements of the City's travel allowance policies.

1.08.A General Principles and Practices

- There is one petty cash account authorized for the City of Charles Town. The amount to be included in the City's petty cash account will be $150. There is one petty cash account authorized for the Charles Town Police Department. The amount to be included in the police department's petty cash account will be $600. There is one petty cash account authorized for the Charles Town Board of Park and Recreation. The amount to be included in the parks and recreation petty cash account will be $500.

- The amount to be disbursed from the petty cash accounts for any single purpose will not exceed $100 without the prior approval of the accounting manager.

- All subsequent increases or decreases in the City's established dollar amount for a petty cash account will be authorized by the City Council through an amendment to this policy document.

- The custodian of the petty cash account will be the accounting manager or his/her designee.

- The accounting manager or their designee shall assure that the amount in a petty cash account is counted and reconciled at least quarterly by someone other than the custodian.

- The petty cash will be kept in a locked safe place.

- When petty cash is disbursed, it must be replenished by warrant payable to Municipal Petty Cash. The replenishment should be subject to the same review and approval as invoices.

- A petty cash account will always be replenished at the end of the fiscal year (June 30) so that expenditures will be reflected in the proper accounting period.

- The replenishment must be by voucher with the appropriate receipts attached. The receipts should show the date, recipient, the purpose, and amount of each cash disbursement. These receipts must be signed by the person receiving the cash and their department head or designated supervisor.

- At the time of replenishment, the custodian should ensure that the balance remaining in petty cash, together with the amount of the replenishment voucher, equals the total authorized for the petty cash account.

- The petty cash accounts may not be used for personal cash advances.

- The petty cash accounts may not be used to cash checks or City warrants.

1.09 PURCHASING AND BID POLICY

A purchasing and bid policy is needed to standardize the sales, bids, and purchasing procedures of the City of Charles Town. It is also needed to promote the fair and equitable treatment of all consumers and suppliers of goods and services, to secure goods and services from local vendors whenever practical, and to provide the most advantageous services to the citizens of Charles Town.

Article 111.02(a) of the Codified Ordinances of Charles Town, updated in February 2022, provides that the policies and procedures contained in this document shall govern the expenditure of funds, except in the case of a declared emergency by the Mayor or the Mayor Pro-Tempore when performing the duties of the office in the absence of the Mayor. For purposes of the City's fiscal procedures, an expenditure of public funds for goods or services included in the annual budget is considered prior approval. The payment for such goods or services will continue to be a part of the routine approval of bills included on the Council agenda. The purpose of this Purchasing and Bid Policy is to assist staff in following approved procedures for selecting contractors and vendors.

The following policies and procedures apply to the purchase of goods or services by all City staff. In the event of a declared emergency by the Mayor, or the Mayor Pro-tempore when serving in such stead, the Mayor may waive the written quote and competitive selection process for purchases above $5,000 when the purchase is determined to be an emergency measure necessary for the immediate preservation of the public peace, health, safety, and welfare of the citizens of the City of Charles Town. The Mayor will document such purposes when presenting the bills for payment at subsequent Council meetings. The Mayor may not waive the competitive selection process required by state law for the construction of facilities exceeding a cost of $10,000.

When practical, any single purchase expected to be over $5,000 but less than $10,000 will require the solicitation of at least three written quotes, which may include review of Internet pricing, by City staff from businesses believed to be qualified to provide the product or service. A preference should be given to identifying local businesses for these quotes. In the event the purchase is so specialized that only one source can effectively provide the product or service, staff will document the specialized nature of the purchase, identify the limitations of other potential suppliers, and seek a waiver from the City's finance committee of the requirement to solicit additional quotes.

Per WV State Code, any construction of facilities exceeding a cost of $10,000 requires a minimum of three written and sealed competitive bids.

Other City purchases expected to exceed $10,000 require a competitive selection process that for the City of Charles Town includes at least an advertisement for bids in the local newspaper of record, posting the opportunity on the City website, the request for written and sealed competitive bids, and the selection of a provider based on qualifications, price, and responsiveness. Solicitation for competitive, sealed bids will be open for at least 15 days. Preference will be given to local contractors and vendors where the local bid is within a 5% difference of the lowest and most responsive bid received. This preference only applies to contractors and vendors with a primary business address located within the municipal boundaries.

Purchases of more than $10,000 for used, public works, service, or safety equipment with specialized features may be purchased using the three quote process noted above.

The City may also purchase products or services valued at more than $10,000 from state term contracts or municipal bulk purchasing programs where a competitive process has already been completed to identify vendors offering the best price. In such instances, staff may shop the competitive price with local contractors and vendors and apply the same 5% preference to determine the lowest and most responsive bid.

A Request for Qualifications process will be used to solicit bids for professional services where the qualifications of the contractor are the primary factor in determining the best and most responsive bid. A Request for Proposals process will be used to solicit bids for goods or services where price is the primary factor in determining the best and most responsive bid.

Renewal of existing contracts may be exempt from this policy with approval of the City Council.

This policy supplements existing WV State Code 8-12-10 and 8-27-23.

1.10 INVOICE PROCESSING POLICY

1.10.A Procedures

The following procedures are to be followed by each department, board, and commission when submitting bills for payment:

1. Review the Invoice. To avoid double payments, the Finance Department will only process payments from original invoices. Each department must ensure that no sales tax is being charged and that only the current balance on the original invoice is being paid.
2. Approve the invoice. All invoices must be signed by the Department head to certify that the goods have been received, the services have been provided, delivery is satisfactory, and that the supporting documents are accurate complete and in compliance with applicable laws and regulations. The Department Head must indicate the departmental budget line from which the invoice is to be paid.
3. Finance Department review. The Finance Department will review all invoices submitted for payment for accuracy and determine if adequate funds are available in the Department's budget.
4. Request prior approval if needed. Any invoice requested to be paid from a line that has reached 75% of its total funding, requires the prior approval of the Finance Director.

1.10.B Credit Cards

City Departments are to use the State purchasing card (p-card) to fullest extent possible. Although some purchases may be restricted, the card is generally available for most purchases. The p-card program is administered by the Finance Department.

1.10.C Essential Services

Essential services are non-competitive goods and services incurred by departments and paid by Accounts Payable. Invoices for essential services are exempt from the requirements outlined in Section 1.09 of this Policy if 1) they are approved in the City's operating budget for the current fiscal year and 2) there is adequate funding available in the Department's particular line.

The Finance Department is responsible for processing and paying most essential services effected through the p-card to the maximum extent possible.

1.10.D Check and Vouchers for Payment of City Bills

The Finance Department shall prepare checks and vouchers for payment of all bills that cannot be effected with the p-card and shall present such checks to members of the Finance Committee for authorized signature.

1.10.E Presentation to Council

The Finance Director shall prepare and present to the Council a report detailing disbursements from the City's General and Capital Reserve Funds. A detailed report of p-card purchases shall be presented to Council on a monthly basis.

1.11 GLOSSARY OF DEFINITIONS AND TERMS

Account. A record of additions, deletions, and balances of individual assets, liabilities, equity, revenues, and expenses.

Accounting System. The set of records and procedures that are used to record, classify, and report information of the financial status and operations of an entity.

Adopted Budget. The City Council approved annual budget establishing the legal authority of the expenditure of funds as set forth in the adopting budget resolution.

Appropriation. Money set aside by the City Council for a specific purpose. Provides designated spending authority to the city manager to approve or oversee approval of the appropriated expenditures.

Audit. An annual examination and evaluation, done by an independent Certified Public Accountant (CPA), of the City's accounting system to ensure conformity with generally accepted accounting principles. In conjunction with performing an audit, independent auditors normally issue a Management Letter stating the adequacy of the City's internal controls as well as recommending improvements to the City's financial management practices.

Balanced Budget. When the total of revenues and other financing sources is equal to or greater than the total of expenditures and other financing uses.

Basis of Accounting & Budgeting. A method used to determine when revenues, expenditures, transfers, and the related assets and liabilities are recognized in the accounts and reported in the financial statements. The three categories of accounting for governmental agencies are (1) Cash Basis – when cash is received or paid; (2) Accrual Basis – when the underlying transaction or event takes place; (3) Modified Accrual Basis – revenues and expenditures are recognized in the accounting period in which they become available, and expenditures are recognized in the accounting period in which the fund liability occurred. The City of Charles Town uses a modified accrual basis for our governmental funds and an accrual basis for our enterprise funds.

Budget & Fiscal Policies. General and specific guidelines adopted by the City Council that govern budget preparation and fiscal administration.

Capital Improvement Program. A rolling multiple-year program for maintaining or replacing existing public facilities and assets, and for building or acquiring new ones. The City follows a five-year schedule, and the annual budget incorporates the current year of the five-year CIP.

Charges for Service. Revenues collected as reimbursement for services provided to the public or to some other program/fund in the City.

Debt Service. The payments of principal and interest on bonds and other debt instruments according to a predetermined schedule.

Deficit. An excess of expenditures or expenses over revenues or resources during an accounting period.

Department. An organizational unit of the City government responsible for carrying out specific functions. In the City's structure, certain "departments" may be considered divisions of a multipurpose department.

Encumbrances. Commitments against an approved budget to pay funds in the future for a service or item. They cease to be encumbrances when the obligations are paid or terminated. The use of encumbrances prevents overspending and provides budgetary control to the organization.

Essential Services. Essential Services are non-competitive, routine, and repetitive purchases required to maintain the City's operations that are pre-approved in the City's budget. Examples of essential services include but are not limited to utility bills, licensing fees, insurance premiums, maintenance contracts, subscriptions and professional dues.

Expenditure. The actual spending or accrual of funds set aside by an appropriation for goods and services obtained.

Fiscal Year. A 12-month period to which the annual budget applies, and financial transactions are recorded. The City's fiscal year begins July 1 and ends June 30.

Full – Time Equivalent (FTE). The amount of time a position has been budgeted for in terms of the amount of time a regular, full-time employee normally works in a year. Full-time employees are paid for 2,080 hours in a year equating to 1.0 FTE. A part-time employee who worked 1,040 hours would equate to 0.5 FTE. Elected positions are budgeted but not included in FTE totals.

Fund. An independent fiscal and accounting entity with a self-balancing set of accounts in which the City records financial transactions relating to revenues, expenditures, assets, and liabilities. Funds are segregated for carrying on specific activities or attaining certain objectives. The fund types used by the City are governmental funds (General, Capital Projects & Special Revenue),

Fund Balance. The excess of a fund's assets over its liabilities.

General Fund. The primary operating fund of the City. All revenues that are not allocated by law or contractual agreement to a specific fund are accounted for in the General Fund and may be utilized for any legitimate governmental purpose.

Generally Accepted Accounting Principles (GAAP). Conventions, rules, and procedures that serve as standards for accounting and the fair presentation of financial statements. The primary authoritative body on the application of GAAP to state and local government is the Governmental Accounting Standards Board.

Governmental Accounting Standards Board (GASB). Ultimate authoritative accounting and financial reporting standard-setting body for state and local governments.

Interfund Transfer. Money transferred from one fund to another, to finance the operations of another fund or reimburse the fund for certain expenditures/expenses.

Municipal Code. A document that codifies the City Council's approved ordinances currently in effect. The Code defines City policy with respect to all areas of municipal jurisdictions and administration.

Ordinance. A formal legislative enactment by the City Council. It has the full force and effect of law within City boundaries unless pre-empted by a higher form of law. An Ordinance has a higher legal standing than a Resolution and is typically codified in the City's municipal code.

Other Post-Employment Benefits (OPEB). Post-employment benefits other than pension benefits.

Reserve. An account which the City uses to either set aside funds that it does not need to spend in the current fiscal year or to earmark revenues for a specific future purpose.

Resolution. A special order of the City Council which has a lower legal standing than an Ordinance.

Revenues. Income received by the City during the fiscal year. Some examples of revenue include taxes, fees, charges for services, and grants.

Special Revenue Funds. A fund used to account for the proceeds of specific revenue sources that are legally restricted to expenditures for specified purposes. Some examples include federal and state grant revenues.

4.01 APPENDIX A – RECORDS MANAGEMENT AND RETENTION

City Council
101 East Washington Street
Charles Town, WV 25414

Meeting: 05/05/25
Department: City Council
Category: Report
Initiator:

SCHEDULED

AGENDA ITEM (ID #)

2025-529: Employee Handbook

ATTACHMENTS:

- Handbook - Final 4-21-25.pdf

CITY OF CHARLES TOWN EMPLOYEE HANDBOOK



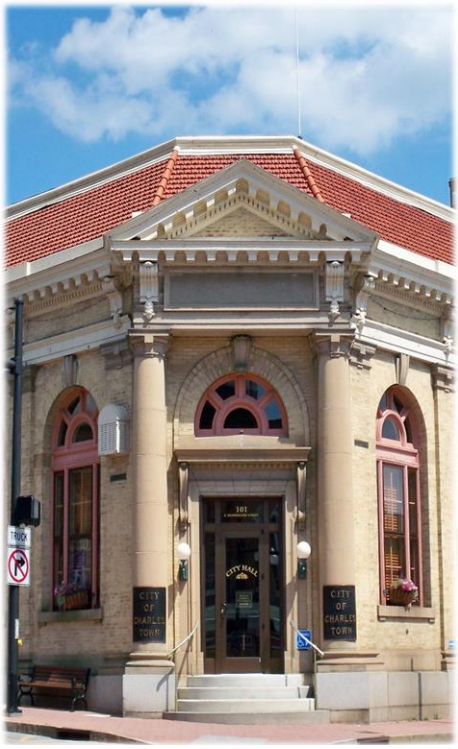



REVISED: April 21, 2025

SECTION 1 INTRODUCTION 5

1.01 WELCOME 5
1.02 OUR CULTURE 5
1.03 ETHICS CODE 6
1.04 VISION STATEMENT 6
1.05 CONFLICT RESOLUTION GUIDELINES 6
1.06 REVISIONS TO THE HANDBOOK 7
1.07 AT-WILL EMPLOYMENT 7

SECTION 2 HIRING & ORIENTATION POLICIES 7

2.01 EEO STATEMENT & NON HARASSMENT POLICY 7
2.02 SEXUAL ABUSE AND MISCONDUCT PREVENTION POLICY 9
2.03 DIVERSITY STATEMENT 11
2.04 DISABILITY ACCOMMODATION 11
2.05 RELIGIOUS ACCOMMODATION 12
2.06 EMPLOYMENT AUTHORIZATION VERIFICATION 12
2.07 NEW EMPLOYEE AND INTRODUCTORY PERIOD 12
2.08 TRAINING PROGRAM 12
2.09 POSTING OF OPENINGS 13
2.10 JOB DESCRIPTIONS 13
2.11 CONFLICTS OF INTEREST 13
2.12 EMPLOYMENT OF RELATIVES AND FRIENDS 13

SECTION 3 WAGE & HOUR POLICIES 13

3.01 INTRODUCTION 13
3.02 PAY PERIOD 14
3.03 PAYCHECK DEDUCTIONS 14
3.04 DIRECT DEPOSIT 14
3.05 ATTENDANCE POLICY 14
3.06 RECORDING TIME 14
3.07 OVERTIME AUTHORIZATION FOR NON-EXEMPT EMPLOYEES 15
3.08 REST & MEAL PERIODS 15
3.09 TRAVEL TIME PAY 15
3.10 TRAVEL EXPENSES 15
3.11 BUSINESS EXPENSES 16
3.12 USE OF COMPANY CREDIT CARDS 16
3.13 JOB ABANDONMENT 17
3.14 INCLEMENT WEATHER POLICY AND UNFORESEEN OPERATIONS INTERRUPTION 17

SECTION 4 EMPLOYMENT POLICIES 18

4.01 PERSONAL APPEARANCE AND DRESS CODE POLICY 18
4.02 PERSONAL DATA CHANGES 18
4.03 EMPLOYEE PERFORMANCE REVIEWS 18
4.04 PROMOTIONS 18
4.05 PAY RAISES 19
4.06 TRANSFERS 19
4.07 WORKFORCE REDUCTION (LAYOFFS) 19
4.08 CRIMINAL ACTIVITY/ARREST 19
4.09 DRUG & ALCOHOL POLICY 19
4.10 STANDARD OF CONDUCT 22
4.11 DISCIPLINARY PROCESS 23
4.12 NON-TOBACCO POLICY 24
4.13 OUTSIDE EMPLOYMENT 24
4.14 EXIT INTERVIEW 24

SECTION 5 EMPLOYEE CLASSIFICATION 24

5.01 NON-EXEMPT FULL-TIME EMPLOYEES 24
5.02 PART-TIME EMPLOYEES 24
5.03 TEMPORARY (SEASONAL EMPLOYEES) 25
5.04 EXEMPT EMPLOYEES 25

SECTION 6 BENEFITS 25

6.01 HEALTH INSURANCE 25
6.02 DENTAL INSURANCE 25
6.03 VISION CARE INSURANCE 25
6.04 DISABILITY INSURANCE 25
6.05 LIFE INSURANCE 26
6.06 PENSION 26
6.07 CONTINUING EDUCATION & TUITION ASSISTANCE 26
6.08 HOLIDAY PAY 26
6.09 SICK PAY 26
6.10 SICK LEAVE DONATION PROGRAM 27
6.11 VACATION TIME/LEAVE 30
6.12 COMP TIME AND HOLIDAY FLEX 31
6.13 LONGEVITY PAY 31
6.14 SHIFT DIFFERENTIAL PAY 32
6.15 CALL BACK/CALL OUT TIME 32
6.16 UNIFORM SUBSIDY 32

6.17 LEAVE OF ABSENCE 32
6.18 FAMILY MEDICAL LEAVE ACT (FMLA) & MILITARY LEAVE 32
6.19 PAID PARENTAL LEAVE 38
6.20 MILITARY LEAVE 39
6.21 JURY DUTY, WITNESS DUTY, AND VOTING LEAVE POLICY 39
6.22 BEREAVEMENT LEAVE 39
6.23 WORKERS' COMPENSATION INSURANCE 40
6.24 UNEMPLOYMENT COMPENSATION INSURANCE 40
6.25 COBRA 40
6.26 PERSONNEL AND MEDICAL RECORDS 40

SECTION 7 GENERAL POLICIES 41

7.01 EMPLOYEE SUGGESTIONS/OPEN DOOR POLICY 41
7.02 CITY BULLETIN BOARDS 41
7.03 SOCIAL MEDIA POLICY 41
7.04 NON-SOLICITATION/NON-DISRUPTIVE POLICY 43
7.05 DRIVING RECORD 43
7.06 TELECOMMUTING POLICY 43
7.07 USE OF COMPANY VEHICLES 44
7.08 VOICEMAIL, EMAIL, AND INTERNET POLICY 44
7.09 TELEPHONE USE 45
7.10 CITY-PROVIDED CELL PHONE/MOBILE DEVICE POLICY 45
7.11 PERSONAL CELL PHONE/MOBILE DEVICE POLICY 46
7.12 MAIL USE 46
7.13 ACCOMMODATIONS FOR NURSING MOTHERS 46
7.14 SECURITY 47
7.15 COMPUTER SECURITY AND COPYING OF SOFTWARE 47
7.16 THIRD-PARTY DISCLOSURES 47
7.17 EMPLOYEE PRIVACY AND RIGHT TO INSPECT 48
7.18 POST-EMPLOYMENT REFERENCE POLICY 48
7.19 GENERAL SAFETY POLICY 48
7.20 WORKPLACE SAFETY (POLICY AGAINST VIOLENCE) 48

SECTION 8 TRADE SECRETS & INVENTIONS 49

8.01 EMPLOYEE INVENTIONS 49
8.02 CONFIDENTIALITY AND NONDISCLOSURE OF TRADE SECRETS 50

CLOSING STATEMENT AND ACKNOWLEDGMENT OF RECEIPT AND REVIEW 51

SECTION 1 INTRODUCTION

1.01 WELCOME



Welcome. You have just joined a dedicated team of employees and managers. We hope that your employment with the City of Charles Town (City) will be rewarding and challenging. We take pride in our employees as well as the services we provide. We consider ourselves a leader in municipal government focused on providing high quality services and outstanding customer service. We strive to make the City a great place to live, work, and play.

The policies outlined in this manual apply to all city employees including those working in the police, utilities, and parks departments. Please take the time to read this employee handbook carefully. Sign the acknowledgment at the end to show that you have read, understand, and agree to the contents of this handbook, which sets out the basic rules and guidelines concerning your employment. This handbook supersedes any previously issued handbooks or policy statements dealing with the subjects discussed herein. The City reserves the right to interpret, modify, or supplement the provisions of this handbook at any time.

Please understand that no employee handbook can address every situation in the workplace. If you ever have questions about your employment, you are encouraged to ask them of your direct supervisor. Likewise, if you have any suggestions for improving the City's policies or procedures, please let your direct supervisor or the City Manager know. We encourage our staff to always be searching for opportunities for continuous improvement.

We wish you success in your employment here at the City of Charles Town!

All the best,
Robert M. Trainor, Mayor

1.02 OUR CULTURE

To be a great employee here at the City of Charles Town, means to embrace our commitment to excellence to each other and to our community. Here we approach our work with dedication, a passion for delivering quality services and exceptional customer service and care. It means actively seeking opportunities for improvement, sharing your ideas, and fostering open communication. As part of our team, you contribute not only to the success of our organization but also to the vibrancy of our city.

Your dedication to our shared values enriches Charles Town as an outstanding place for living, working, and enjoying leisure activities.

1.03 ETHICS CODE

The City will conduct its business honestly and ethically. We strive to improve the quality of our services, and operations and will maintain a reputation for honesty, fairness, respect, responsibility, integrity, trust, and sound judgment. Our managers and employees are expected to adhere to high standards of business and personal integrity.

We expect that all employees will not knowingly misrepresent the City and will not speak on behalf of the City unless specifically authorized to do so. The confidentiality of trade secrets, proprietary information, and similar confidential sensitive information about our City, citizens, or operations that is protected from public disclosure is to be managed responsibly.

Failure to adhere to these ethical standards may lead to disciplinary action, which could include termination of employment**.** The degree of discipline imposed may be influenced by the existence of voluntary disclosure of any ethical violation and whether the violator cooperated in any subsequent investigation.

1.04 VISION STATEMENT

The City of Charles Town is a community that offers an exceptional quality of life for all residents by: (1) promoting access to jobs and livelihoods; (2) providing well-planned, safe, and secure neighborhoods; (3) delivering quality public services; (4) preserving and promoting its unique history and cultural heritage for residents and visitors alike to enjoy; and (5) stimulating a business-friendly culture that embraces innovation and encourages entrepreneurship, business development, and growth.

1.05 CONFLICT RESOLUTION GUIDELINES

We are committed to fostering a comfortable, productive, legal, and ethical work environment. To achieve this, we encourage you to bring any workplace problems, concerns, or grievances to your supervisor's attention. "Supervisor" is defined as the following for each of these divisions:

City Hall - City Manager, department head, and his/her designee(s)
City of Charles Town Police Department – Chief of Police and his/her designee(s)
Charles Town Utility Board – Utility Manger and his/her designee(s)

To facilitate conflict resolution, follow these procedures:

1. If you believe there is inappropriate conduct or activity by the City's management, employees, vendors, or any related parties, please discuss your concerns with your supervisor at a suitable time and place.
2. If you have already discussed the matter with your supervisor and feel the response was insufficient, or if your supervisor is the source of the problem, please bring your concerns to the City Manager. Clearly indicate the nature of the problem, the individuals involved, your efforts to resolve the issue, and any suggested solutions.
3. If the inappropriate conduct or activity involves the City Manager and you have not received a satisfactory response after discussing it with them, please present

your concerns to the Chair of the Personnel Committee. Clearly indicate the nature of the problem, the individuals involved, your efforts to resolve the issue, and any suggested solutions.

1.06 REVISIONS TO THE HANDBOOK

This employee handbook aims to keep you informed about the terms and conditions of your employment, including the City's policies and procedures. Please note that the handbook is not a contract. The City reserves the right to revise, add, or remove any content in this handbook as deemed necessary. When changes occur, we strive to inform you promptly, usually through a written supplement distributed electronically via email.

1.07 AT-WILL EMPLOYMENT

Your employment with the City is "at-will." This means that your employment can be terminated at any time, with or without notice, and for any reason or no reason at all. Similarly, you have the right to leave the City at any time, with or without notice, and for any reason or no reason at all.

Please note that the employment of city police officers is governed by the civil service code provisions for municipal corporations as outlined in the West Virginia Code and shall take precedence over any conflicting provisions in this Employee handbook.

Nothing in this employee handbook, or in any other City document, should be interpreted as creating a guarantee of continued employment, a right to termination only for cause, or any other promise of continued benefits or employment.

SECTION 2 HIRING & ORIENTATION POLICIES

2.01 EEO STATEMENT & NON HARASSMENT POLICY

Equal Opportunity Statement

Our City is committed to the principles of equal employment. We are committed to complying with all federal, state, and local laws providing equal employment opportunities, and all other employment laws and regulations, including the City's Equal Opportunity Ordinance Article 154. Each employee and council member will receive a copy of this Ordinance at the time of their initial hire. It is our intent to maintain a work environment which is free of harassment, discrimination, or retaliation because of age, race, color, national origin, ancestry, religion, sex, familial status, pregnancy, physical or mental disability, genetic information (including testing and characteristics), veteran status, uniformed service member status, blindness, sexual orientation, gender identity, or any other status protected by federal, state, or local laws. The City is dedicated to the fulfillment of this policy in all aspects of employment, including but not limited to recruiting, hiring, placement, transfer, training, promotion, rates of pay, and other compensation, termination, and all other terms, conditions, and privileges of employment.

The City will conduct a prompt and thorough investigation of all allegations of discrimination, harassment, or retaliation, or any violation of the City's Equal Employment Opportunity Policy in a confidential manner. The City will take appropriate corrective action, if and where warranted. The City prohibits retaliation against any employee who provides information about, complains, or assists in the investigation of any complaint of discrimination or violation of the City's Equal Employment Opportunity Policy.

We are all responsible for upholding the City's Equal Employment Opportunity Policy and any claimed violations of that policy should be brought to the attention of the City Manager or his/her designee.

Policy Against Workplace Harassment

The City has a strict policy against all types of workplace harassment, including sexual harassment and other forms of workplace harassment based upon an individual's age, race, color, national origin, ancestry, religion, sex, familial status, pregnancy, physical or mental disability, genetic information (including testing and characteristics), veteran status, uniformed service member status, blindness, sexual orientation, gender identity, or any other status protected by federal, state, or local laws. All forms of harassment of, or by, employees, council members, vendors, visitors, customers, and clients are strictly prohibited and will not be tolerated.

Sexual Harassment

Sexual harassment is defined as unwelcomed sexual advances, requests for sexual favors, and other verbal or physical conduct of a sexual nature when (1) submission to such conduct is made either explicitly or implicitly as a term or condition of an individual's employment, (2) submission to, or rejection of such conduct by an individual is used as the basis for employment decisions affecting such individual, or (3) such conduct has the purpose or effect of unreasonably interfering with an individual's work performance or creating an intimidating, hostile, or offensive work environment.

While it is not possible to identify each and every act that constitutes or may constitute sexual harassment, the following are some examples of sexual harassment: (a) unwelcomed requests for sexual favors; (b) lewd or derogatory comments or jokes; (c) comments regarding sexual behavior or the body of another employee; (d) sexual innuendo and other vocal activity such as catcalls or whistles; (e) obscene letters, notes, emails, invitations, photographs, cartoons, articles, or other written or pictorial materials of a sexual nature; (f) repeated requests for dates after being informed that interest is unwelcomed; (g) retaliating against an employee for refusing a sexual advance or reporting an incident of possible sexual harassment to the City or any government agency; (h) offering or providing favors or employment benefits such as promotions, favorable evaluations, favorable assigned duties or shifts, etc., in exchange for sexual favors; and (i) any unwanted physical touching or assaults, or blocking or impeding movements.

Other Harassment

Other workplace harassment is often verbal or physical conduct that insults or shows hostility or aversion towards an individual because of the individual's age, race, color, national origin, ancestry, religion, sex, familial status, pregnancy, physical or mental disability, genetic information (including testing and characteristics), veteran status, uniformed service member status, blindness, sexual orientation, gender identity, or any other status protected by federal, state, or local laws.

Again, while it is not possible to list all the circumstances that may constitute other forms of workplace harassment, the following are some examples of conduct that may constitute workplace harassment: (a) the use of disparaging or abusive words or phrases, slurs, negative stereotyping, or threatening, intimidating or hostile acts that relate to the above protected categories; (b) written or graphic material that insults, stereotypes or shows

aversion or hostility towards an individual or group because of one of the above protected categories and that is placed on walls, bulletin boards, email, voicemail, or elsewhere on the City's premises, or circulated in the workplace; and (c) a display of symbols, slogans, or items that are associated with hate or intolerance towards any select group.

Reporting Discrimination and Harassment
Any employee who feels that he or she has witnessed, or been subject to, any form of discrimination or harassment is required to immediately notify their supervisor or the City Manager. If the employee's supervisor or the City Manager is involved in any way in the alleged harassment or other discriminatory conduct, the matter should be immediately reported to a member of the City's Personnel Committee.

The City prohibits retaliation against any employee who provides information about, complaints, or assists in the investigation of any complaint of harassment or discrimination.

The City Manager or his/her designee will promptly and thoroughly investigate any claim and take appropriate action where we find a claim has merit and report the findings of the investigation to the City Council Personnel Committee (Committee). If any claim of harassment is levied against the City Manager, an independent person or organization acceptable to the Committee will investigate the matter and reports its findings back to the same. Disciplinary action for violation of this policy may include, but is not limited to reprimand, suspension, demotion, transfer, and termination. If the City Manager, or the Committee as appropriate, determines that harassment or discrimination occurred, corrective action will be taken to effectively end the harassment. As necessary, the City Manager and Committee will monitor any incident of harassment or discrimination to assure the inappropriate behavior has stopped. In all cases, the City Manager, or Committee if appropriate, will follow up as necessary to ensure no retaliation for making a complaint or cooperating with an investigation.

2.02 SEXUAL ABUSE AND MISCONDUCT PREVENTION

The City of Charles Town prohibits and does not tolerate sexual abuse or misconduct in the workplace or during any organization-related activity. The City of Charles Town provides procedures for employees, volunteers, council, board, commission and committee members or any other victims of sexual abuse or misconduct to report such acts. Those reasonably suspected or believed to have committed sexual abuse or misconduct will be appropriately disciplined, up to and including termination of employment or membership, as well as criminally prosecuted. No employee, volunteer, council, board, commission, committee member or other person, regardless of his or her title or position has the authority to commit or allow sexual abuse or misconduct.

Definitions and Examples
The following definitions or examples of sexual abuse, misconduct or harassment, may apply to any and/or all of the following persons – employees, volunteers, council members or other third parties.

Sexual abuse or misconduct may include, but is not limited to:

- Child sexual abuse – any sexual activity, involvement or attempt of sexual contact with a person who is a minor (under 18 years old) where consent is not or cannot be given.

- Sexual activity with another who is legally incompetent or otherwise unable to give consent.
- Physical assaults or violence, such as rape, sexual battery, abuse, molestation or any attempt to commit such acts.
- Unwanted and intentional physical conduct that is sexual in nature, such as touching, pinching, patting, brushing, massaging someone's neck or shoulders and/or pulling against another's body or clothes.
- Material such as pornographic or sexually explicit images, posters, calendars or objects.
- Unwelcome and inappropriate sexual activities, advances, comments, innuendoes, bullying, jokes, gestures, electronic communications or messages (e.g. email, text, social media, voicemail), exploitation, exposure, leering, stalking or invasion of sexual privacy.
- A sexually hostile environment characterized as comments or conduct that unreasonably interferes with one's work performance or ability to do the job or creates an intimidating, hostile or offensive environment.
- Direct or implied threats that submission to sexual advances will be a condition of employment or affiliation with the organization.

Reporting Procedure
Immediately report suspected sexual abuse or misconduct to their supervisor or City Manager. It is not required to directly confront the person who is the source of the report, question or complaint before notifying any of the individuals listed. The City of Charles Town will take every reasonable measure to ensure that those named in the complaint of misconduct or are too closely associated with those involved in the complaint, will not be part of the investigative team.

Anti-retaliation and False Allegations
The City of Charles Town prohibits retaliation made against any employee, volunteer, council member or other person who lodges a good faith complaint of sexual abuse or misconduct or who participates in any related investigation. Making knowingly false or malicious accusations of sexual abuse or misconduct can have serious consequences for those who are wrongly accused. The City of Charles Town prohibits making false or malicious sexual misconduct allegations, as well as deliberately providing false information during an investigation. Anyone who violates this rule is subject to disciplinary action, up to and including termination of employment or membership and criminal prosecution.

Investigation and Follow-up
The City of Charles Town will take all allegations of sexual abuse or misconduct seriously and will promptly, thoroughly and equitably investigate whether misconduct has taken place. The organization may utilize an outside third-party to conduct an investigation of misconduct. The City of Charles Town will cooperate fully with any investigation conducted by law enforcement or other regulatory/protective services agencies. The City of Charles Town will make every reasonable effort to keep the matters involved in the allegation as confidential as possible while still allowing for a prompt and thorough investigation.

Reporting to Law Enforcement or Appropriate Child or Adult Protective Services
The City of Charles Town is committed to following the state and federal legal requirements for reporting allegations or incidents of sexual abuse or misconduct to appropriate law

enforcement and child or adult protective services organizations. It is the policy of The City of Charles Town not to attempt to investigate or assess the validity or credibility of an allegation of sexual or physical abuse as a condition before reporting the allegation to proper law enforcement authorities or protective services organizations.

Employee and Worker Screening and Selection
As part of its sexual abuse and misconduct prevention program, The City of Charles Town is committed to maintaining a diligent screening program for prospective and existing employees, volunteers and others that may have interaction with those employed by, associating with or serviced by The City of Charles Town. The organization may utilize a variety of methods of screening and selection, including but not limited to applications, personal interviews, criminal background checks and personal and professional references.

Supervision of Youth
To provide a safe environment for minors, The City of Charles Town strives that a minimum of two adult workers supervise or be in attendance with minors during organization-related activities. The purpose is to avoid one-on-one interactions between adults and minors that are not easily observable by others. If individual meetings with a minor must be held in an office, keep the door open. Only conduct closed door meetings when another adult is put on notice of the meeting and the door remains unlocked.

2.03 DIVERSITY STATEMENT

The City is committed to fostering a diverse and inclusive workplace that reflects the rich diversity of our community. We strive to ensure equal employment opportunities for all individuals, regardless of race, color, religion, gender, sexual orientation, national origin, age, disability, or veteran status. We recognize that a diverse workforce enhances the quality of our services and strengthens our ability to serve the community effectively. For definitions of Equal Employment Opportunity (EEO), please refer to Ordinance 154.

We are dedicated to creating an environment where every employee feels valued, respected, and empowered to contribute their unique perspectives and skills. The City takes its commitment to diversity seriously and encourages all employees to support and participate in our efforts to promote diversity and inclusion. Together, we can build a stronger, more equitable community for all.

2.04 DISABILITY ACCOMMODATION

The City complies with federal and state disability regulations, including the Americans with Disabilities Act (ADA). Qualified applicants or employees who inform the City of a physical or mental disability requiring accommodation for them to perform the essential functions of their jobs should inform their immediate supervisor or the City Manager so that available and appropriate accommodations can be discussed.

Procedure for reasonable accommodation requests:

- employee advises their immediate supervisor or the City Manager of the need for accommodation. The employee completes a Request for Accommodation form and gives it to his or her supervisor;
- the accommodation request will be discussed with the employee and the employee's supervisor(s);

- the employee may be required to provide documentation supporting a disability, including medical certification;
- if a reasonable appropriate accommodation is readily available, the request will be approved and the accommodation implemented; and
- if an accommodation is not readily ascertainable, the matter will be pursued further with assistance from appropriate external resources.

The City will consider the request but reserves the right to offer its own accommodation to the extent permitted by law. Some, but not all, of the factors that the City will consider are cost, the effect that an accommodation will have on current established policies, and the burden on operations, including other employees, when determining a reasonable accommodation.

2.05 RELIGIOUS ACCOMMODATIONS

The City is dedicated to fostering an inclusive and respectful workplace that honors the diverse religious beliefs and practices of our employees. In accordance with our commitment to equal opportunity and non-discrimination, we will make reasonable accommodations for employees' religious observances and practices unless doing so would cause undue hardship on the operations of the City. This may include flexible scheduling, voluntary shift substitutions, and modifications to dress codes or workplace policies. Employees seeking a religious accommodation are encouraged to communicate their needs to their supervisor or the City Manager, who will work collaboratively to identify appropriate solutions. Our goal is to ensure that all employees feel respected and supported in their religious practices while maintaining a productive and harmonious work environment.

2.06 EMPLOYMENT AUTHORIZATION VERIFICATION

All new hires and current employees are required by federal law to verify their identity and eligibility to work in the United States. You will be required to complete federal Form I-9 on the first day of employment. If this form and verification of employment eligibility is not completed during the first three days of employment, we are required by law to terminate your employment. If you are currently employed and have not complied with this requirement or if your status has changed, please inform your supervisor.

2.07 NEW EMPLOYEE AND INTRODUCTORY PERIOD

The first 90 days of your employment is considered an introductory period and vacation leave will be restricted (see Section 6.11). During this period, you will become familiar with the City and your job responsibilities. During this time, we will have the opportunity to monitor the quality and value of your performance and make any necessary adjustments in your job description or responsibilities. Your introductory period with the City can be shortened or lengthened as deemed appropriate by your supervisor and the City Manager. Completion of this introductory period does not imply guaranteed or continued employment. Nothing that occurs during or after this period should be construed to change the nature of the "at-will" employment relationship.

2.08 TRAINING PROGRAM

In most cases, and for most departments, employee training is conducted on an individual basis by the supervisor or their designee. Even if an employee has prior experience in their

specific functions, it is essential for them to learn our unique procedures and understand the responsibilities associated with their specific position. If you ever feel you require additional training, please consult your immediate supervisor. We are committed to providing the necessary resources and support to ensure that all employees can perform their duties effectively and confidently.

2.09 POSTING OF OPENINGS

The City desires to promote qualified employees from within where it believes that is possible, consistent with the need to assure that all positions are staffed by highly competent individuals. New job openings generally will be posted on the appropriate division's website: City Hall, Police Department, Utility Board.

2.10 JOB DESCRIPTIONS

The City attempts to maintain a job description for each position. If you do not have a copy of a current job description you should request one from your supervisor. Job descriptions prepared by the City serve as an outline only. Due to the business needs of the City, you may be required to perform job duties not within your written job description. Furthermore, the City may have to revise, add to, or delete from your job duties according to City needs. On occasion, the City may need to revise job descriptions with or without notice to the employee.

If you have any questions regarding your job description, or the scope of your duties, please speak with your supervisor, the City Manager or his/her designee.

2.11 CONFLICTS OF INTEREST

The City is concerned with conflicts of interest that create actual or potential job- related concerns, especially in the areas of confidentiality, citizen relations, safety, security, and morale. Any actual or potential conflict of interest between an employee of the City and a person or organization seeking to do business or employment with the City, must be disclosed by the employee to their immediate supervisor or the City Manager. If an actual or potential conflict of interest is determined to exist, the City will take such steps as it deems necessary to reduce or eliminate this conflict.

2.12 EMPLOYMENT OF RELATIVES AND FRIENDS

The City will not employ friends or relatives in circumstances where actual or potential conflicts may arise which could compromise supervision, safety, confidentiality, security, and morale at the City. It is your obligation to inform the City of any such potential conflict so the City can determine how best to respond to the situation. Employees must not be involved in decisions as to hiring, evaluation, compensation, promotion, demotion, or disciplinary action of family members or members of their household.

SECTION 3 WAGE & HOUR POLICIES

3.01 INTRODUCTION

An employee's pay depends on a wide range of factors, including pay scale surveys, individual effort, budgetary considerations, and market forces. If you have any questions about your compensation, including matters such as paid time off, overtime, benefits, or paycheck deductions, please speak with your supervisor.

3.02 PAY PERIOD

The standard pay period is bi-weekly, with pay dates every other Friday, totaling 26 pay periods per year. If a holiday falls on a payday, special provisions may be needed. Each payroll cycle runs from Monday to Sunday.

3.03 PAYCHECK DEDUCTIONS

The City is required by federal, state, and certain local laws to withhold certain deductions from your paycheck. This includes income and unemployment taxes, and FICA contributions (Social Security and Medicare) as well as any other deductions required under law or by court order for wage garnishments. Civil service employees are not subject to Social Security withholdings. The amount of your tax deductions will depend on your earnings and the number of exemptions you list on your federal Form W-4 and applicable state withholding form. You may also authorize voluntary deductions from your paycheck, including contributions for insurance premiums, optional retirement plans, or other services. Your deductions will be reflected in your wage statement.

3.04 DIRECT DEPOSIT

All employees are encouraged to enroll in direct deposit. If you would like to take advantage of direct deposit, ask your supervisor or the City Manager or his/her designee for an application form. Typically, the bank will begin the direct deposit of your payroll within 30 calendar days after you submit your completed application.

If you have selected the direct deposit payroll service, a written pay stub will be provided.

3.05 ATTENDANCE POLICY

If you know ahead of time that you will be absent or late, provide reasonable notice to your supervisor. Employees may be required to provide documentation of any medical or other excuse for being absent or late.

The City reserves the right to utilize unused vacation, sick time, or other paid time off to unauthorized absences. Absences resulting from approved leave, vacation, or legal requirements are exceptions to the policy.

3.06 RECORDING TIME

Federal and state laws require accurate records of hours worked by nonexempt (hourly) employees. All nonexempt employees must accurately enter their work hours, including lunch periods and breaks over 15 minutes. Report any pay discrepancies, unrecorded or incorrect hours, or involuntary missed lunch periods to your supervisor.

Please refrain from completing another employee's time sheet or asking them to complete yours. Supervisors complete time sheets for certain employees. Indicate your days off (e.g., vacation, sick leave). Any changes to your timecard must be approved and initialed by your supervisor. Submit your time sheet to your supervisor two business days prior to the end of the pay period.

Falsifying time records or recording time for another employee may result in disciplinary action, up to and including termination.

3.07 OVERTIME AUTHORIZATION FOR NON-EXEMPT EMPLOYEES

If you are a non-exempt employee, you may qualify for overtime pay. All overtime must be approved in advance and in writing by your supervisor, unless otherwise authorized.

At certain times, the City may require you to work overtime. The City will attempt to provide advance notice whenever possible. Failure to work overtime when requested or working unauthorized overtime may result in disciplinary action, up to and including termination.

Overtime pay of one and one-half times an employee's regular rate of pay or average pay rate (if you perform work at different pay rates during the relevant week) is paid for any hours worked over 40 hours in a workweek. Time taken for bereavement leave, jury duty leave, voting leave, sick leave, annual leave, as well as flex time and comp time and hours paid but not worked on a holiday (see 6.08 Holiday Pay), do not count as time worked for computing overtime.

3.08 REST & MEAL PERIODS

The City strives to provide a safe and healthy work environment and complies with all federal and state regulations regarding rest and meal periods. Please check with your supervisor regarding procedures and schedules for breaks and meal periods.

3.09 TRAVEL TIME PAY

Some nonexempt positions within the City require travel. The City pays nonexempt employees for travel time in accordance with federal and state law. For purposes of this policy, the regular workday is Monday – Friday 8:30-5:00 p.m.

3.10 TRAVEL EXPENSES

The purpose of this policy is to define employee travel rules and the authority for incurring and approving travel expenses.

Travel expenses are the reasonable and necessary expenses incurred by employees when traveling on approved City business trips. City travel is limited to business activities for which other means of communication is inadequate and for which prior approval of the employee's supervisor has been received.

Personal Vehicles

All employees using their own vehicle for City business must maintain insurance coverage as required by law and a valid driver's license. Travel between the employee's home and primary office is not considered to be City business. Employees are not authorized to use personal vehicles for City business travel without written authorization from the City Manager. Employees will be reimbursed for personal vehicle use at the standard IRS mileage rate. The City Manager or his/her designee must authorize any deviation from this policy.

Travel Expenses

The City Council sets parameters on the expenditure of City funds to ensure that public funds are spent in an appropriate manner. Advance written approval from your supervisor is required before travel arrangements are made. The City pays a per diem rate for meals and incidental expenses and the actual amounts incurred for all other appropriate expenses when employees are on travel assignments. The per diem rate for meals and

incidental expenses will be based on the current US General Services Administration (GSA) rate schedule for the destination at the time of travel. Any travel that requires lodging that is more costly than the pre-approved GSA rate must receive written approval from the City Manager or his/her designee before scheduling the lodging. The employee must demonstrate that lodging in the area is not available at or below the pre-approved GSA rate. Employees may receive an advance payment of the per diem for meals and incidentals with the approval of the supervisor at least one week prior to the date of travel. If any portion of the travel is cancelled or postponed after the employee has received an advance for per diem, the proportional share of per diem resulting from the cancellation or postponement must be repaid to the City within two weeks of the original travel date.
If you have any questions about appropriate expenses covered by the City, please discuss with the City Manager or his/her designee. Examples of typical expenses include:

- Airline tickets.
- Meals and incidentals.
- Lodging.
- Car rental, bus, taxi, parking.
- Associated gratuities.
- Other expenses necessary to achieve business purposes.

Family Members
The City will pay the travel expenses of spouses or other family members only when their presence is deemed necessary to the business purpose of the trip and when approved in advance in writing by the City Manager.

3.11 BUSINESS EXPENSES

The purpose of this policy is to define approved non-travel employee business expenses and the authority for incurring and approving such expenses.

Approved business expenses are the reasonable and necessary expenses incurred by employees to achieve legitimate business purposes.

Technical and Training Seminars/Conferences
The City pays for expenses associated with attendance at work related classes and seminars that enhance job-related skills. Prior written approval must be obtained from the employee's supervisor. Please note that the City will not pay the employee the per diem meal rate for meals that are included as part of the conference, seminar, or training session.

Employee Reporting
Employees are to report their approved expenses on the standard Expense Report Form and must include a description of the expense, its business purpose, date, place, and the participants.

3.12 USE OF COMPANY CREDIT CARDS

Every employee in the possession of a City credit or purchase card will adhere to the strictest guidelines of responsibility for the proper protection and use of that card. Employees must adhere to all relevant rules, regulations, and policies established for the use of such cards by the City and the WV State Auditor's office. City card purchases under $250 do not require prior approval. City card purchases over this amount must receive prior approval from your supervisor or the City Manager.

All sales receipts generated by use of the City's card must be turned in monthly to the accounting department using the appropriate P-Card accounting form. City cards are not to be used for personal reasons. Use of the City card is restricted to approved, business-related expenses.

Any unauthorized purchases made with a City card will be the cardholder's responsibility. Any such purchase will be reimbursed to the City by the employee within 30 days.

Lost or stolen City cards must be reported immediately to your supervisor. Failure to follow this policy may result in disciplinary action up to and including termination. Infractions are also subject to other disciplinary actions as outlined in the WV Auditor's program rules.

3.13 JOB ABANDONMENT

If an employee fails to report to work or call in for an acceptable reason for three (3) consecutive days, he or she will be considered to have abandoned their job and voluntarily resigned from the City.

3.14 INCLEMENT WEATHER POLICY AND UNFORESEEN OPERATIONS INTERRUPTION

It is the policy of the City of Charles Town to remain open during most periods of inclement weather; however, where extraordinary circumstances warrant, due to weather or other unforeseen business interruption, the City Manager reserves the right to close the city offices. Should this occur, the City Manager will contact all managers, including the Chief of Police and the Utility Manager, and advise them to alert their employees. Notice of closure of city offices will also be posted on Facebook and on the doors to City Hall. The City Manager will also notify the Mayor and all members of city council. When inclement weather conditions warrant and at the discretion of the City Manager, a liberal leave policy may be utilized allowing employees who are uncomfortable traveling in the adverse conditions to use any accrued leave or take time off without pay. Liberal leave is not available for police officers or maintenance crew members.

Closure of the city pool for inclement weather shall be determined by the Parks Manager in consultation with the Pool Manager.

City Offices Closed

If the city offices are announced to be closed on a given day, all staff will receive regular pay for the day of closure. All civil service and non-exempt employees that are required to work when city offices are closed will receive additional pay at one and one-half times their normal rate of pay for actual hours worked during the closure.

City Offices Open

If the city offices remain open on an adverse weather day, the employee may work remotely pursuant to Section 7.06 Telecommuting Policy of this handbook and with the approval of their supervisor. An employee with a job classification that doesn't not lend itself to working remotely and who is eligible for liberal leave may elect not to report to work and may elect to: 1) use any accrued vacation time off for the missed day or 2) the employee will not be paid for the day. Regardless of whether the city offices remain open on an inclement day, it is each employee's decision to determine if they can safely arrive at work under the conditions. If an employee elects not to work on a given day, the City requires a phone call to your manager or supervisor advising as to your status for the day, prior to the beginning of the work day.

Questions about this policy should be addressed to the department manager or the City Manager.

SECTION 4 EMPLOYMENT POLICIES

4.01 PERSONAL APPEARANCE AND DRESS CODE POLICY

Your personal appearance reflects the reputation and integrity of the City. All employees are required to report to work neatly groomed and dressed. You are expected to maintain personal hygiene habits that are generally accepted in the community, i.e. wearing clean clothing, practicing good grooming and personal hygiene, and exhibiting appropriate social behavior.

Depending on the employee's classification, they may be required to wear the following safety equipment while on the job: steel-toed boots, safety glasses, safety masks, etc. Members of the City Police Department must follow the Department's internal procedure concerning personal appearance and uniform requirements.

If you come to work inappropriately dressed for a professional work environment, you will be asked to go home and return to work dressed appropriately. If you have any questions regarding the dress code or dress code accommodations, please contact your supervisor. Recurring problems will result in disciplinary action up to and including termination of employment.

4.02 PERSONAL DATA CHANGES

Please ensure the City has your current contact information, including current mailing address and telephone number. Promptly notify the Finance Director or his/her designee of any changes to your marital or tax withholding status.

4.03 EMPLOYEE PERFORMANCE REVIEWS

The City will make efforts to review your work performance. The performance evaluation process will take place on an annual basis, which may vary as business needs dictate. The City Manager will set a time for annual performance reviews. You may specifically request that your supervisor assist you in developing a performance improvement plan at any time.

The goal of the performance evaluation is to enhance the quality and value of your work performance. It will assess your initiative, effort, attitude, job knowledge, and other factors. Please note that a positive performance review does not guarantee a pay raise or continued employment. City pay raises and promotions are based on numerous factors.

4.04 PROMOTIONS

To match you with the best job for you and to meet the business needs of the City, you may be transferred from your current job. It is the City's policy to promote from within the City only when the most qualified candidate is available. Promotions are made on an equal opportunity basis according to employees possessing the needed skills, education, experience, and other qualifications that are required for the job. Promotions for city police officers will be considered pursuant to the civil service code provisions for municipal corporations contained in West Virginia Code.

All employees promoted into new job positions will undergo a 90-day introductory period as described in the New Employees and Introductory Periods section. Employees will continue to receive City benefits for which they are eligible.

4.05 PAY RAISES

Depending on the City's budgetary considerations and other factors, efforts will be made to give pay raises consistent with City's fiscal health and the employee's job performance. The City may also make individual pay raises based on merit or due to a change of job position. Pay increases for city police officers will be considered pursuant to the civil service code provisions for municipal corporations contained in West Virginia Code.

4.06 TRANSFERS

The City may transfer your employment from one position to another with or without notice, as required by operation or service needs or upon request by an employee and management approval.

4.07 WORKFORCE REDUCTION (LAYOFFS)

If necessary, based upon the needs of the City and its fiscal condition, management may decide to implement a reduction in force (RIF). We acknowledge that RIFs can be a trying experience for individuals and the City will make its best effort to make sound business decisions while acknowledging the needs of its workforce. Employment decisions concerning for city police officers will be made pursuant to the civil service code provisions for municipal corporations contained in West Virginia Code.

4.08 CRIMINAL ACTIVITY/ARREST

Involvement in criminal activity, whether on or off City property, during employment may result in disciplinary action including suspension or termination of employment. Disciplinary action depends upon a review of all factors involved, including whether the employee's action was work-related, the nature of the act, or circumstances which adversely affect attendance or performance. Any disciplinary action is not dependent upon the disposition of any case in court.

Employees are expected to be on the job, ready to work, when scheduled. Inability to report to work as scheduled because of an arrest may lead to disciplinary action, up to and including termination of employment, for violation of an attendance policy or job abandonment.

4.09 DRUG & ALCOHOL POLICY

City of Charles Town recognizes that the health and future of the City is dependent upon the health of its employees, and the City is committed to providing a safe and substance-abuse free environment for employees and visitors. Accordingly, it is the City's right, obligation, and intent to maintain a safe and productive working environment for all its employees and to protect City property, equipment, and operations. Impaired performance or judgment because of the use of drugs or alcohol poses serious safety and health risks not only to the user, but also to the employees who work with the user.

Employees who are experiencing problems with alcohol or other drugs are urged to voluntarily seek assistance through a mental health or substance abuse program to resolve such problems before they interfere with their work.

An employee who is determined to be impaired or under the influence of, or in possession of, unauthorized drugs or other substances while on duty, while carrying out the business of the organization, or during work hours is in violation of the City's commitment to safety.

Pursuant to its commitment to a drug-free workplace, the City of Charles Town may test employees for illegal drugs and/or alcohol as a condition of continued employment. The term "unauthorized drugs or other substances" refers to the use of alcohol and to both illegal drugs and legally prescribed drugs when such drugs are used in a manner inconsistent with how they were prescribed. City of Charles Town treats medical marijuana the same as any other illegal drug. Misuse of prescribed drugs while engaged in City business will be considered a violation of the substance abuse policy. The City may conduct drug and/or alcohol testing for, among other legitimate drug abuse prevention and/or treatment purposes, the following:

- deterrence and/or detection of possible illicit drug use, possession, sale, conveyance, or distribution, or manufacture of illegal drugs, intoxicants, or controlled substances in any amount or in any manner, on or off the job, or the abuse of alcohol or prescription drugs;
- investigation of possible individual employee impairment;
- investigation of accidents in the workplace or incidents of workplace theft or other employee misconduct;
- maintenance of safety for employees, customers, clients or the public at large; or
- maintenance of productivity, quality of products or services, or security of property or information.

If City of Charles Town receives a confirmed drug and/or alcohol test result indicating a violation of its policies, or if an employee refuses to take the test, the City may use disciplinary action for an employee, up to and including termination. If a drug or alcohol is found to be present in the employee's system, the employee may be terminated and forfeits his or her eligibility for unemployment compensation benefits and, if injured at the time of the intoxication, indemnity benefits under the workers' compensation laws of the State of West Virginia.

Testing of current employees will be conducted during, or immediately before or after, a regular work period, and will be considered time worked for purposes of compensation. City of Charles Town will pay the costs of all drug and/or alcohol tests it requires of employees and prospective employees. Note: confirmatory retests of a split sample, if requested, are usually at the employee's cost.

Any individual whose drug test is confirmed positive will be offered the opportunity to provide, in confidence, information that may explain the positive result, such as recently used prescription or nonprescription drugs, or other relevant medical information. If the individual provides information demonstrating that the test result may be explained by a lawful medical reason the test provider will report the test as negative to the City. If you need accommodation to participate in the testing process, please notify the City Manager, his/her designee, or the test administrator as soon as possible.

Testing Procedures

All drug and alcohol testing under this policy will be in accordance with the following procedures:

1. Any drug and alcohol test will occur during, or immediately before or after, the employee's regular work period;
2. Any drug and alcohol testing required by Employer will be counted as worked time for the purposes of compensation and benefits for current employees;
3. Employer will provide transportation or pay reasonable transportation costs to employees if the required tests are conducted at a location other than the employee's normal work site;
4. Employer will pay for the full cost of any drug or alcohol test under this policy;
5. The collection of samples will be performed under reasonable and sanitary conditions;
6. Samples will be collected using a "split sample" method, meaning that a part of the sample that is sent to the first laboratory will be retained unopened for transport to a second laboratory in the event that the employee or prospective employee requests that it be tested following a verified positive test result of the primary specimen.
7. Any observer of the collection of urine samples will be of the same sex as the employee or prospective employee;
8. Sample collections will be documented, and documentation procedures include:
   A. Labeling of samples so as to reasonably preclude the possibility of misidentification of the person tested in relation to the test result provided and handling of samples in accordance with reasonable chain-of-custody and confidentiality procedures;
   B. An opportunity for the employee or prospective employee to voluntarily provide notification of any information which may be considered relevant to the test, including but not limited to, identification of currently or recently used prescriptions or non-prescription drugs, or other relevant medical information. This may be accomplished by providing for review by a qualified medical professional to verify a laboratory sample which tests positive in a confirmatory test;
9. Sample collection, storage, and transportation to the place of testing will be performed so as to reasonably preclude the possibility of sample contamination, adulteration, or misidentification;
   Confirmatory drug testing will be conducted at a laboratory that is:
   A. Certified by the U.S. Department of Health and Human Services' Substance Abuse and Mental Health Services Administration;
   B. Approved by the U.S. Department of Health and Human Services under the Clinical Laboratory Improvements Act; or
   C. Approved by the College of American Pathologists.

10. Drug and alcohol testing shall include confirmation of any positive test results. For drug testing, confirmation will be by use of a different chemical process than was used in the initial drug screen. The second confirmatory drug test shall be a chromatographic technique such as gas chromatography/mass spectrometry, or another comparably reliable analytical method.
11. Employer will take adverse employment action, including termination of the employment of a current employee or job denial to a prospective employee, based only on a confirmed positive drug or alcohol test.

Confidentiality

All records relating to an employee or prospective employee's drug and alcohol test results will be kept confidential and maintained separately from their personnel file. The results of any test under this policy shall be disclosed only to Employer, its authorized employees, agents or representatives of Employer, the tested employee or prospective employee, or the authorized agent or representative of the employee or prospective employee.

Challenge of Test Results

In the event that an employee or prospective employee tests positive and desires to challenge the results of his or her initial sample test result, he or she may request that the split sample be transported to a second laboratory for separate testing. All costs associated with testing of the split sample shall be the responsibility of the employee or prospective employee challenging the initial sample test results.

Administration of this Policy

Employer expressly reserves the right to change, modify, or delete the provisions of this Drug-Free Workplace Program without notice.

If you have any questions regarding this policy or if you have questions about drug testing in the workplace that are not addressed in this policy, please contact your supervisor.

4.10 STANDARD OF CONDUCT

The City wishes to create a work environment that promotes job satisfaction, respect, responsibility, integrity, and value for all our employees, citizens, and other stakeholders. Every employee has a shared responsibility toward improving the quality of our work environment. By deciding to work at the City, you agree to follow the City's rules. The conduct of city police officers is also governed by specific law enforcement policies.

While it is impossible to list every item that could be considered misconduct in the workplace, what is outlined here is a list of common-sense infractions that could result in disciplinary action, up to and including immediate termination of employment. This policy is not intended to limit the City's right to use disciplinary action or terminate employees for any reason permitted by law. In fact, while we value our employees, the City retains the right to terminate an employee on an "at-will" basis, except as otherwise specifically noted in this Employee Handbook.

Examples of inappropriate conduct include:

- violation of the policies and procedures set forth in this handbook;
- possessing, using, distributing, selling, or negotiating the sale of illegal drugs or other controlled substances;
- being under the influence of alcohol during working hours on City property (including City vehicles), or while conducting City business;
- inaccurate reporting of the hours worked by you or any other employee;
- providing knowingly inaccurate, incomplete or misleading information when speaking on behalf of the City or in the preparation of any employment related documents including, but not limited to, job applications, personnel files, employment review documents, intra-City communication or expense records;
- taking or destroying the City's property;

- possession of potentially hazardous or dangerous property such as firearms, weapons, chemicals, etc., without prior authorization or as part of your job as a public safety officer except as otherwise set forth in this handbook;
- fighting with, or harassment (as defined in our EEO policies) of, any fellow employee, vendor, or citizen;
- sharing trade secrets, proprietary information, or similar confidential sensitive information about our City, citizens, or operations that is protected from public disclosure;
- refusal or failure to follow directions or to perform a requested or required job task;
- refusal or failure to follow safety rules and procedures;
- excessive tardiness or absences;
- smoking in non-designated areas;
- working unauthorized overtime;
- solicitation of fellow employees on the City property during working time (Refer to Non-solicitation/Non-distribution Policy);
- failure to dress according to City policy;
- use of obscene or harassing (as defined by our EEO policies) language in the workplace;
- outside employment, including self-employment, which interferes with your ability to perform your job at this organization;
- gambling on City property; and
- lending City authorized keys or keycards to unauthorized persons.

Nothing in this policy is intended to limit employee rights under the National Labor Relations Act.

4.11 DISCIPLINARY PROCESS

Violation of the City's policies or procedures may result in disciplinary action including demotion, transfer, leave without pay, or termination of employment. The City encourages the use of progressive disciplinary action based on the type of prohibited conduct. However, the City is not obligated to follow progressive disciplinary action and may discipline or terminate an employee for violating rules of conduct or if the quality or value of their work fails to meet expectations at any time. Please note that any use of progressive disciplinary action does not change the "at will" nature of your employment.

In appropriate circumstances, management will provide the employee first with a verbal warning, then with one or more written warnings, and if the conduct is not sufficiently altered, eventual demotion, transfer, forced leave, or termination of employment. Your supervisor will make every effort possible to allow you to respond to any disciplinary action taken. Understand that while the City is concerned with consistent enforcement of our policies, the City is not obligated to follow any disciplinary or grievance procedure and that depending on the circumstances, employees may be disciplined or terminated without any warning or procedure.

For civil service employees, the grievance procedures outlined by the West Virginia Code and regulations will be followed.

4.12 NON-TOBACCO POLICY

The City of Charles Town is concerned about the effect that tobacco consumption and exposure can have on its employees and citizens. Tobacco use, smoking, and/or vaping in city-owned facilities, restrooms, and in city-owned vehicles is prohibited.

4.13 OUTSIDE EMPLOYMENT

Outside employment which creates a conflict of interest or which affects the quality or value of your work performance or availability at the City is prohibited. The City recognizes that employees may seek additional employment during off hours, but expects, in these cases, that any outside employment will not affect job performance, work hours, or scheduling, or otherwise adversely affect the employee's ability to effectively perform his or her duties. Any conflicts should be reported to your supervisor. Failure to adhere to this policy may result in disciplinary action up to and including termination. Members of the City Police Department must follow the Department's internal procedure concerning outside employment.

An employee desiring to engage in secondary employment must inform his or her supervisor and the City Manager. An employee who has an outside business activity or secondary employment that conflicts with working overtime (including Saturday and Sunday) should be aware that the City will not consider the outside business activity or secondary employment a suitable excuse for not reporting or staying for overtime work. Further, conducting outside business activities on work time is prohibited.

4.14 EXIT INTERVIEW

When you leave the City's employment, you may be asked to participate in an exit interview. This helps management understand employee relations better and prevent unnecessary claims. Your cooperation is appreciated. The interview may be conducted by your supervisor or their designee, and it may be documented and signed by you.

SECTION 5 EMPLOYEE CLASSIFICATION

If you have a question regarding whether you are an exempt or nonexempt employee, contact the City Manager.

5.01 NON-EXEMPT FULL-TIME EMPLOYEES

A full-time employee is an employee who is not classified as temporary or seasonal, who is employed for 12 months, and works at least 1,040 hours per year. Any employee who is not temporary and who works 20 or more hours per week is considered a full-time employee as defined in §162-5-2.3 of the Public Retirement System. Unless stated otherwise, all the benefits provided to employees are for full-time employees only. Full-time employees working less than 40 hours per week will earn benefits on a proportional basis unless otherwise mandated by state and federal laws. Full-time non-exempt employees are eligible for time and a half for hours worked over 40 hours per week.

5.02 PART-TIME EMPLOYEES

A part-time employee is one who works 20 hours or less per week or 1,040 hours per year. Part-time employees shall not be entitled to any benefits other than those mandated by state and federal laws.

5.03 TEMPORARY (SEASONAL EMPLOYEES)

Temporary or seasonal employees are hired for a specific period or specific work project, generally not to exceed 6 months in duration. The City reserves the right to extend the duration of temporary employment when necessary. Temporary and seasonal employees are not eligible for employee benefits unless specified otherwise in this handbook or in the benefit plan summaries.

5.04 EXEMPT EMPLOYEES

An exempt employee is not eligible for overtime pay as otherwise required by federal, state, or local laws.

SECTION 6: BENEFITS

6.01 HEALTH INSURANCE

The City provides its regular full-time employees with health care coverage beginning on the first full month following the employee's date of hire. Medical plan benefits, including terms of eligibility, for eligible employees and their dependents are described in the Summary Plan Description (SPD) that is available to all employees. These benefits may be canceled or changed at the discretion of the City, unless otherwise required by law. You may obtain a copy of the SPD by contacting the City Manager or his/her designee.

The City of Charles Town follows the federal Family and Medical Leave Act, as stated in Chapter 28 of the United States Code. Health benefits during leave taken under the Family Medical Leave Act (FMLA), if applicable, are maintained by the City on the same terms, with each paying their respective share, as if the employee continued to work. For questions, please contact the City Manager or his/her designee.

If you or a dependent become ineligible for benefits due to a change in work hours or through a life event, or you leave employment with us, you may have the right to continue your medical benefits under the Consolidated Omnibus Budget Reconciliation Act (COBRA). The City or their designee will mail you information about your COBRA rights. *Please also see section 6.25.*

6.02 DENTAL INSURANCE

All full-time employees are eligible for the dental plan beginning on the first full month following the employee's date of hire. Dental plan benefits, including full terms of eligibility, are described in detail in the Summary Plan Description (SPD).

6.03 VISION CARE INSURANCE

All full-time employees are eligible for the vision care plan beginning on the first full month following the employee's date of hire. Vision care plan benefits, including full terms of eligibility, are described in detail in the Summary Plan Description (SPD).

6.04 DISABILITY INSURANCE

The City provides employees with disability income protection when employees miss work due to non-work-related disabilities. The terms and conditions, including eligibility, for the disability insurance program are outlined in the Summary of Plan Benefits. Please contact the City Manager or his/her designee for a copy of the plan provisions. The Charles Town Utility Board does not provide disability insurance coverage to any of its employees.

6.05 LIFE INSURANCE

All full-time employees are provided with life insurance by the City beginning on the first full month following the employee's date of hire. You will be required to notify the City Manager or his/her designee of your intended beneficiary. Refer to the Summary Plan Description (SPD) for details about the benefit, including eligibility.

6.06 PENSION

All full-time employees are eligible to participate in the City's retirement plan. The provisions of the retirement plan are governed by the West Virginia Consolidated Public Retirement Board.

As with your insurance benefits, refer to the Summary Plan Description (SPD) provided by City Manager or his/her designee for specifics.

6.07 CONTINUING EDUCATION & TUITION ASSISTANCE

We believe in the continuing education of our employees. If the City sends you to a class or training program during normal working hours related to your employment and you are a non-exempt employee, you will be paid at your regular rate of pay for that time. If the class is required for your position with the City, the City will also pay any fees or charges related to the class. Licenses that employees are required to maintain for their positions will also be paid for by the City.

If you are interested in attending an outside class and having the City pay for your attendance, you are required to provide advance written notice to your supervisor indicating a description of the class, including the subject matter, length, and cost. Depending on the type of training, the City may reimburse some or all the fees, including expenses for materials, meals, and transportation, if advance written approval is obtained from your supervisor.

Career development initiated by the employee and approved by the City Manager will result in a fifty (50%) reimbursement of tuition per satisfaction of each class. Satisfactory completion of a class requires a grade C or equivalent or better. Employees are expected to remain employed by the City for a period of one year after the reimbursement is provided or agree to repay the entire sum of tuition aid granted.

6.08 HOLIDAY PAY

The City offers to all full-time regular employees holidays as specified in the West Virginia State Code 2-2-1. This applies to both civil and non-civil service employees. In addition to regular compensation, any employee required to work on a holiday will receive premium compensation at one and one-half times their normal rate of pay for the actual hours worked during the holiday. For all employees, the premium rate applies to the observed date of the holiday.

6.09 SICK PAY

All full-time employees shall accrue 120 hours per year of sick leave credit. Accrual commences from the date of hire and is accrued evenly throughout the year on a pay period basis.

Sick leave may be used by employees when they are incapacitated for the performance of duties due to non-work-related illness, injury, or for medical/dental appointments. An employee may use sick leave to care for a member of their family. spouse; parents; children; brothers; sisters; grandparents; grandchildren; step parents; step children; foster parents; foster children; guardianship relationships; same sex and opposite sex domestic partners; and spouses or domestic partners of the aforementioned, as applicable The amount of sick leave used by an employee must not exceed the amount of sick leave accrued. All foreseeable, extended sick leave shall require prior written approval from the employee's supervisor.

An employee on sick leave shall directly notify his or her supervisor, or designee, of the fact and the reason for the absence as soon as possible. Failure to directly contact the supervisor and receive an acknowledgement of the communication from the supervisor may be cause for denial of sick leave with pay for the period of the absence. Upon return to work, the employee shall submit the leave request in the attendance system.

Employees are expected to return to work as soon as practical. An employee may be asked to provide medical documentation of an injury or illness for themselves or family member to support paid sick leave and the date the employee expects to return to work. If not provided, the employee may be required to take alternate leave or not be compensated for the time taken.

Suspected Misuse of Sick Leave

When an employee appears to have a pattern of leave that is inconsistent with the reasons provided in this policy, the Supervisor may request a doctor's note for the absence(s). Misuse of leave may include requesting sick leave for days where annual leave was previously denied and requesting unplanned leave in connection with scheduled days off, including weekends and holidays.

Sick Pay Accrual

Sick leave can be accumulated to an unlimited amount. Upon retirement, it can be exchanged for extended health insurance benefits or additional service credit as governed by WV Consolidated Public Retirement Board rules and regulations.

Sick Pay and Separation from Employment

Upon separation of employment, employees shall not be paid for accrued but unused sick leave. Please see above for treatment of unused sick leave by WV Consolidated Public Retirement Board.

6.10 SICK LEAVE DONATION PROGRAM

The sick leave donation program is a voluntary program and is optional for each employee to donate accrued sick leave to another City employee. Leave cannot be transferred between City employees and employees of the Charles Town Utility Board.

Definitions

1. **Donated Sick Leave:** previously accrued sick leave donated by one employee to another, meeting the eligibility requirements of this policy, which may be used in conjunction with Family Medical Leave.

2. **Donor**: an eligible employee who voluntarily gives a portion of their accrued sick leave to another eligible employee.
3. **Eligible Employee**: regular full time staff who are currently employed by the City of Charles Town or the Charles Town Utility Board as further defined in section 7.01 of the employee handbook, and who also meet sick leave eligibility requirements.
4. **Family Medical Leave**: protected unpaid leave that provides qualified employees with up to 12 weeks of leave per year. Often referred to as FMLA leave.
5. **Immediate Family Members**: individuals related by kinship, adoption, marriage or foster children who are living in the same household. If not in the same household, an immediate family member is strictly limited to the employee's spouse, child or parent who needs care and assistance as a direct result of a documented serious health condition.
6. **Prolonged Absence**: an illness, injury, or medical condition (including pregnancy) that requires the employee's absence from work lasting four consecutive shifts or longer.
7. **Protected Leave:** a leave that ensures that an eligible employee will be restored to the employee's original job, or to an equivalent job, with equivalent pay, benefits, and other terms and conditions of employment during the duration of the protected leave.
8. **Recipient**: an eligible employee who receives a donation of accrued sick leave from another eligible employee.
9. **Serious Health Condition**: an illness, injury, impairment, or physical or mental condition as defined by the U.S. Department of Labor Wage and Hours Division.
10. **Unprotected Leave**: leave that does not require maintenance, reinstatement or restorations to the employee's original job upon return.

Guidelines

1. Recipient Guidelines

a. Eligibility

Donated Sick Leave is to be used for a serious health condition of a prolonged nature for the employee and/or immediate family members. This may include intermittent absences related to the same illness or injury. The recipient may be required to produce medical evidence that meets these requirements.

i. The recipient must be an eligible employee.
ii. The recipient must have already or almost exhausted all leave accruals.
iii. If eligibility requirements for FMLA leave are met, the recipient will be placed on protected FMLA leave. The recipient may qualify for a sick leave donation even if he or she is not eligible for an FMLA leave, however it would be an unprotected leave.
iv. Employees eligible for Workers' Compensation Insurance (WCI) benefits are not eligible to use sick donation benefits and will not be processed if the employee has an open Workers' Compensation claim related to the illness or injury supporting the sick leave donation request, including any appeal to a denial of WCI benefits
v. Individual recipients may not receive more than the equivalent of 12 weeks.

b. Limitations

i. The recipient may not provide or receive remuneration or a gift in exchange for a sick leave donation under this program.
ii. An employee may not intimidate, threaten, coerce, or attempt to intimidate, threaten, or coerce, any other employee for the purpose of soliciting donations of sick leave under this program. Such action shall be grounds for disciplinary action up to and including termination.
iii. Donated Sick Leave balances will not transfer to an employee of another unit of Charles Town's government outside of the unit the donor employee works for, are not eligible for restoration upon re-employment after a separation of employment, and are not eligible for payment to an estate upon death. The recipient may not receive service credit in the Public Employees Retirement System for any Donated Sick Leave to the employee under this policy that is unused.

2. Donor Guidelines

a. Eligibility

i. The donor must be an eligible employee
ii. The donor is encouraged to maintain sufficient leave balances at the time of donation.
iii. Donors may not borrow against future sick leave accruals in order to donate sick leave.

b. Limitations

i. The donor may not receive remuneration or a gift in exchange for donated sick leave under this program.
ii. The donor may not have been nor personally intimidate, threaten, coerce, or attempt to intimidate, threaten, or coerce, any other employee for the purpose of soliciting donations of sick leave under this program Such action shall be grounds for disciplinary action up to and including termination.
iii. The donation of sick leave is irrevocable and will not be returned to the donor in cases where the recipient does not use all donation sick leave.

Procedures

1. The Recipient employee who is requesting donations of leave, needs to fill out the Sick Leave Donation Request form. The form should be filled out completely noting the current amount of leave balances the requesting employee currently has, an explanation of the need circumstances, the estimated total leave that will be needed by the employee and any other information that may be relevant to the request's consideration.
2. The recipient employee should submit the completed form to their supervisor for review. Supervisors will hold the form and the information it contains in strict confidence.

3. The supervisor in conjunction with the City's finance department will review the form and determine if the request qualifies under the program's guidelines.
4. If denied, the supervisor will report to the employee the reason for the denial. If approved, the supervisor will distribute a request letter to all employees of the relevant unit of government who are believed to be eligible to donate, for consideration of donations.
5. Employee's who wish to donate sick leave will need to fill out the Sick Leave Donation form and submit their forms to their supervisor. Supervisors will review the donation and if approved, will coordinate with the finance department to transfer the leave. If denied, the supervisor will report to the donating employee the reason for the denial.
6. Once submitted, donation forms are irrevocable and any leave donated will not be returned to the donor if the recipient does not use all the donated sick leave.

6.11 VACATION TIME/LEAVE

All full-time employees shall be entitled to the following vacation leave with pay:

Years of Service (Beginning)	Rate of Accrued
Hire Date through year 1	40 hours granted and begin accrual of additional 40 hours
2	80 hours
3-6	96 hours
7-10	120 hours
11+	160 hours

Vacation time will be granted to an employee on their date of hire and will accrue thereafter based on years of service as noted in the chart above. Vacation time is accrued on a per pay period basis. Employees are not eligible to take vacation leave within the first 90 days of employment unless approved by their supervisor.

City Council's Personnel Committee shall be allowed to negotiate vacation time for contract positions including, but not limited to, the City Manager and the Chief of Police.

All annual leave requests will require prior approval from the applicable Department Director. Vacation leave must be scheduled and approved in advance and must accommodate the City's work schedule. Department Directors are responsible for coordinating vacation schedules for employees in their departments. Provided departmental workloads will permit, employees should be permitted to select their desired vacation periods. If the desired schedules conflict with City requirements, the City's requirements are given first consideration. A vacation leave request in excess of 10 working days must be submitted by the employee 30 days in advance.

Illness while on Annual Leave: When an illness or physical incapacity occurs during the time an eligible employee is on vacation leave, sick leave may be granted by the supervisor to cover the period of illness or incapacity and the charge against vacation leave reduced accordingly. Application for such substitution may be required to be supported by a medical certificate or other acceptable evidence.

Vacation Time: Maximum Accrual
Although you may carry over unused vacation time from year to year, there is a 240-hour cap on the amount of vacation time you can accrue. Once you reach your cap, you will not accrue any more vacation until you use some of the time in your account and drop below the cap. After your balance goes below the cap, you will begin accruing vacation again. However, you will not receive retroactive credit for time worked while you were at the cap limit. The amount of vacation accrued, used, and available will appear on your paycheck stub.

Vacation Time: Minimum Increments of Leave
The minimum amount of leave time you can use at one time is 15 minutes.

Vacation Time and Separation from Employment
Upon voluntary or involuntary separation from employment, you are entitled to payment for only accrued but unused vacation time, not to exceed 240 hours.

6.12 COMP TIME AND HOLIDAY FLEX

Comp time off is provided for civil service employees in lieu of monetary overtime compensation at the rate of one and one-half hours compensation for each hour of overtime worked. Such time off will be granted within a reasonable period after such a request when the use of it does not unduly disrupt the operations of the City or the department within the City.

Holiday flex is provided for civil service employees in lieu of monetary compensation for employees who are not regularly scheduled to work a city-observed holiday. Holiday flex is earned if the observed holiday falls on a civil service officer's regular, scheduled day off and is earned at equal time up to the number of hours of a regular shift.

The City reserves the right to compensate in cash, rather than providing comp time or holiday flex time off. The Police Chief, working closely with the finance and accounting department, will be responsible for keeping an accurate accounting of comp time and holiday flex time earned and taken.

Comp time and holiday flex time may be accumulated up to a total of 100 hours combined. Upon request and at the discretion of the Chief of Police, accumulated comp time and holiday flex time may be paid out to civil service employees up to 80 hours.

Comp time for non-civil service employees shall be approved by the City Manager or the Utility Manager as appropriate only in severe weather or catastrophic events under the same conditions listed for civil service employees. Accrued but unused comp time will be paid to non-civil service employees upon separation from employment.

6.13 LONGEVITY PAY

Civil service employees will begin receiving a longevity bonus of $50 per year for each year of employment after completing four (4) years of service with the Charles Town Police Department. The first bonus will be paid on the officer's fifth (5) anniversary date and will increase each year for twenty (20) years and be capped at a maximum of $1,000 per year.

6.14 SHIFT DIFFERENTIAL PAY

Working closely with the city's finance and accounting department to determine if the budget permits, the Chief of Police may offer a shift differential premium for officers working a shift outside the normal 8 am to 5 pm schedule. This policy shall be documented by the Chief in writing and is determined on a year to year basis.

6.15 CALL BACK/CALL OUT TIME

Any employee that is called back to work or out for duty outside of their normal work schedule shall be paid a minimum of two (2) hours.

6.16 UNIFORM SUBSIDY

On the first pay period of the fiscal year, any employee that is required to wear a uniform as part of their normal day shall receive a uniform allowance if the budget permits. The amount of the allowance shall be determined by the City Manager, Police Chief, and Utility Manager as appropriate. The allowance is used to purchase boots, gloves, thermal undergarments, etc.

6.17 LEAVE OF ABSENCE

A leave of absence (leave) is defined as an unpaid approved absence from work for a specified period of time for medical, parental, military, or other approved reasons. If an employee finds that he /she must be out of work for more than three days, he or she should contact the immediate supervisor and/or the City Manager to determine if a leave of absence may be necessary.

While on leave, an employee must contact the immediate supervisor on a schedule approved by the supervisor but in no circumstance longer than at least every 30 days. This provision does not apply to employees taking Family and Medical Leave Act (FMLA) leave. Employees taking FMLA leave should consult the documents they are provided for FMLA leave or should discuss such notification or certification issue with the City Manager or his/her designee. Failure to contact the City Manager or his/her designee upon request may result in voluntary termination of employment. Failure to return to work upon the expiration of the leave or refusing an offer of reinstatement for which the employee is qualified will also result in voluntary termination of employment.

Leave of Absence and Required Documentation

All requests for a leave of absence must be made on a Leave of Absence Request Form for the particular leave (FMLA, disability accommodation, military, pregnancy, other medical leave, personal leave, etc.) and submitted to the City Manager or his/her designee. An employee must provide 30 days' advance notice when the need for the leave of absence is foreseeable; for instance, if medical treatments or other events are planned or known in advance. If the leave of absence is not foreseeable, the employee must provide notice to his/her immediate supervisor as soon as possible. Medical certifications and/or other documentation supporting the need for the leave will be required.

Leave of Absence and Job Benefits

For leaves other than approved FMLA leaves, the City will pay its portion of the cost of the employee's benefits including health, dental, life, and disability insurance benefits while an employee is on leave for the end of the monthly billing cycle at which time a COBRA notification will be issued. Family and Medical Leave Act (FMLA) leaves of absence allow for up to 12 weeks of group health insurance continuation coverage in the same manner as

if the employee continued to work. For employees taking FMLA military care giver leave, up to 26 weeks of group health insurance continuation coverage is provided. The employee must continue to pay his or her portion of the benefits which may be made by payroll deductions or by check which must be submitted to the City Manager or his/her designee each pay period unless other arrangements have been made. If the employee fails to pay his or her portion of the benefits for more than 30 days, the employee's coverage(s) will be terminated.

While on leave, employees are required to use any accrued vacation, sick time, or other type of accrued leave.

No benefits will be accrued while an employee is on leave. Except as otherwise provided by law, only time spent on a leave of absence for military reserve duty will be counted as time employed in determining an employee's eligibility for benefits that accrue based on length of employment.

Leave of Absence and Return to Work
Upon return to work, the employee may be required to take a fitness for duty exam or otherwise provide medical clearance.

6.18 FAMILY MEDICAL LEAVE ACT (FMLA) & MILITARY LEAVE

The City recognizes that there are times when an employee may need to be absent from work due to qualifying events under the Family and Medical Leave Act (FMLA). Accordingly, we will provide eligible employees up to a combined total of 12 weeks of unpaid FMLA leave per leave year for the following reasons and any other leave authorized by the FMLA:

- **Parental Leave**: For the birth or placement of an adopted or foster child;
- **Personal Medical Leave**: When an employee is unable to work due to his or her own serious health condition;
- **Family Care Leave**: To care for a spouse, child, or parent with a serious health condition;
- **Military Exigency Leave**: When an employee's spouse, parent, son, or daughter (of any age) experiences a qualifying exigency resulting from military service (applies to active service members deployed to a foreign country, National Guard and Reservists); and
- **Military Care Leave**: To care for an employee's spouse, parent, son, daughter (of any age), or next of kin who requires care due to an injury or illness incurred while on active duty or was exacerbated while on active duty. Note: A leave of up to 26 weeks of leave per 12-month period may be taken to care for the injured/ill service member.

Key Policy Definitions

- **Eligible employees** under this policy are those who have been employed for at least 12 months (need not be consecutive months and under certain circumstances hours missed from work due to military call-up will also be counted) and have performed at least 1,250 hours of service in the 12-month period immediately preceding the date leave is to begin.

- **Leave year** for the purposes of this policy shall be a rolling 12-month period measured backward from the date an employee uses any FMLA leave.
- A **spouse** means a husband or wife as defined or recognized under state where the individual was married, including a common law marriage or same-sex marriage. Spouse also includes a husband or wife in a marriage that was validly entered into outside of the United States, if the marriage could have been entered into in at least one state.
- A **son or daughter** for the purposes of parental or family leave is defined as a biological, adopted, foster child, step-child, legal ward, or a child for whom the employee stood in loco parentis to, who is (1) under 18 years of age or, (2) 18 years of age or older and incapable of self-care because of physical or mental disability. The onset of a disability may occur at any age for purposes of the definition of adult "son or daughter" under the FMLA. A son or daughter for the purposes of military exigency or military care leave can be of any age.
- A **parent** means a biological, adoptive, step, or foster parent or any other individual who stood in loco parentis to the employee when the employee was a son or daughter. This term does not include "parents in-law."
- **Next of kin** for the purposes of military care leave is a blood relative other than a spouse, parent, or child in the following order: brothers and sisters, grandparents, aunts and uncles, and first cousins. If a military service member designates in writing another blood relative as his or her caregiver, that individual shall be the only next of kin. In appropriate circumstances, employees may be required to provide documentation of next of kin status.
- A **serious health condition** is an illness, injury, impairment, or physical or mental condition that involves inpatient care, continuing treatment by a health care provider, or otherwise determined by a doctor. Ordinarily, unless complications arise, cosmetic treatments and minor conditions such as the cold, flu, ear aches, upset stomach, minor ulcers, headaches (other than migraines), and routine dental problems are examples of conditions that are not serious health conditions under this policy. If you have any questions about the types of conditions which may qualify, contact the City Manager or his/her designee.
- A **health care provider** is a medical doctor or doctor of osteopathy licensed to practice by the state in which the doctor practices, physician's assistant, podiatrist, dentist, clinical psychologist, optometrist, nurse practitioner, nurse-midwife, clinical social worker authorized to practice in the state and performing within the scope of his or her practice, or Christian Science practitioner licensed by the First Church of Christ. Under limited circumstances, a chiropractor or other provider recognized by our group health plan for the purposes of certifying a claim for benefits may also be considered a health care provider.

- **Qualifying exigencies** for military exigency leave include:
  - Short-notice call-ups/deployments of seven calendar days or less (**Note**: Leave for this exigency is available for up to seven days beginning the date of call-up notice);
  - Attending official ceremonies, programs, or military events;
  - Special child care needs created by a military call-up including making alternative child care arrangements, handling urgent and non-routine child

care situations, arranging for school transfers, or attending school or daycare meetings;
- Making financial and legal arrangements to address a military member's absence;
- Attending counseling sessions for the military service member, the employee, or the military service members' son or daughter who is under 18 years of age or 18 or older but is incapable of self-care because a mental or physical disability when the need for that counseling arises from the covered active duty or call to covered active duty status of the military member and the counseling is provided by someone other than a health care provider;
- Rest and recuperation (Note: Fifteen days of leave is available for this exigency per event);
- Post-deployment activities such as arrival ceremonies, re-integration briefings, and other official ceremonies sponsored by the military (Note: Leave for these events is available during a period of 90 days following the termination of active duty status). This type of leave may also be taken to address circumstances arising from the death of a covered military member while on active duty;
- Parental care when the military family member is needed to care for a parent who is incapable of self-care (e.g. arranging for alternative care or transfer to a care facility); and
- Other exigencies that arise that are agreed to by both the City and employee.
- A serious injury/illness incurred by a service member in the line of active duty or that is exacerbated by active duty is any injury or illness that renders the service member unfit to perform the duties of his or her office, grade, rank, or rating.

Foreseeable Need for Leave: If the need for leave is foreseeable because of an expected birth/adoption or planned medical treatment, employees must give at least 30 days' notice. If 30 days' notice is not practicable, notice must be given as soon as possible. Employees are expected to complete and return a leave request form prior to the beginning of leave. Failure to provide appropriate notice and/or complete and return the necessary paperwork may result in the delay or denial of leave.

Unforeseeable Need for Leave: If the need for leave is unforeseeable, notice must be provided as soon as practicable and possible under the facts of the case. Normal call-in procedures apply to all absences from work including those for which leave under this policy may be requested. Employees are expected to complete and return the necessary leave request form as soon as possible to obtain the leave. Failure to provide appropriate notice and/or complete and return the necessary paperwork on a timely basis will result in the delay or denial of leave.

Leave Request Process: To request leave under this policy, employees must obtain and complete a leave request form from his or her supervisor or his/her designee and return the completed form to the same. If the need for leave is unforeseeable and employees will be absent more than three days, employees should contact the City Manager or his/her designee by telephone and request that a leave form be mailed to their home. If the need

for leave will be fewer than three days, employees must complete and return the leave request form upon returning to work.

Call-in Procedures: In all instances where an employee will be absent, the call-in procedures and standards established for giving notice of absence from work must be followed.

FMLA Leave Increments

Parental Leave: Leave for the birth or placement of a child must be taken in a single block and cannot be taken on an intermittent or reduced schedule basis. Parental Leave must be completed within 12 months of the birth or placement of the child; however, employees may use parental leave before the placement of an adopted or foster child to consult with attorneys, appear in court, attend counseling sessions, etc.

Family Care, Personal Medical, Military Exigency, and Military Care Leave: Leave taken for these reasons may be taken in a block or blocks of time. In addition, if a health care provider deems it necessary or if the nature of a qualifying exigency requires, leave for these reasons can be taken on an intermittent or reduced-schedule basis. The employee must make a reasonable effort to schedule treatment so as not to unduly disrupt the City's operations.

Paid Leave Utilization During FMLA Leave
Employees taking parental, family care, military exigency and/or military care leave must utilize available vacation, sick, and/or other types of accrued leave during this FMLA leave. Employees on personal medical leave must utilize available sick, vacation, and/or other types of accrued leave during this FMLA leave. Employees receiving short- or long-term disability or workers' compensation benefits during a personal medical leave will not be required to utilize these benefits. However, employees may elect to utilize accrued benefits to supplement these benefits up to an amount that does not exceed 100% of their normal pay. After exhaustion of accrued paid leave, any remaining FMLA leave will be unpaid.

Certification and Fitness for Duty Requirements
Employees requesting family care, personal medical, or military care leave must provide certification from a health care provider to qualify for leave. Such certification must be provided within 15 days of the request for leave unless it is not practicable under the circumstances despite the employee's diligent efforts. Failure to timely provide certification may result in leave being delayed, denied, or revoked. In the City's discretion, employees may also be required to obtain a second and third certification from another health care provider at the City's expense (except for military care leave). Recertification of the continuance of a serious health condition or an injury/illness of a military service member will also be required at appropriate intervals.

Employees requesting a military exigency leave may also be required to provide appropriate active duty orders and subsequent information concerning qualifying exigencies involved.

Employees requesting personal medical leave may also be required to provide a fitness for duty certification from their health care provider prior to returning to work.

Scheduling FMLA Leave and Temporary Transfers
Where possible, employees should attempt to schedule leave so as not to unduly disrupt operations. Employees requesting leave on an intermittent or reduced schedule basis that is foreseeable based on planned medical treatment may be temporarily transferred to another job with equivalent pay and benefits that better accommodates recurring periods of leave.

Health Insurance on FMLA
The City will maintain an employee's health insurance coverage during FMLA leave on the same basis as if he or she were still working. Employees must continue to make timely payments of their share of the premiums for such coverage. Failure to pay premiums within 30 days of when they are due may result in a lapse of coverage. In this event, the City will provide written notice the employee 15 days before the date coverage will lapse that coverage will terminate unless payments are promptly made. Alternatively, at the City's option, the City may pay the employee's share of the premiums during the leave and recover the costs of this insurance upon the employee's return to work. Coverage that lapses due to nonpayment of premiums will be reinstated immediately upon return to work without a waiting period. Under most circumstances, if an employee does not return to work at the end of leave, the City may require the employee to reimburse the City for the health insurance premiums paid during the leave.

FMLA and Return to Work
Employees returning to work at the end of leave will be placed in their original job or an equivalent job with equivalent pay and benefits. Employees will not lose any benefits that accrued before leave was taken. Employees may not, however, be entitled to discretionary raises, promotions, bonus payments, or other benefits that become available during the period of leave. The employee may be required to submit a medical release before returning to work.

FMLA and Spouse Aggregation
In the case where an employee and his or her spouse are both employed by the City, the total number of weeks to which both are entitled in the aggregate because of the birth or placement of a child or to care for a parent with a serious health condition will be limited to 12 weeks per leave year. Similarly, a husband and wife employed by the City will be limited to a combined total of 26 weeks of leave to care for a military service member. This 26-week leave period will be reduced, however, by the amount of leave taken for other qualifying FMLA events. This type of leave aggregation does not apply to leave needed because of an employee's own serious health condition, to care for a spouse or child with a serious health condition, or because of a qualifying exigency.

General Provisions:

Failure to Return: Employees failing to return to work or failing to make a request for an extension of their leave prior to the expiration of the leave may be deemed to have voluntarily terminated their employment.

Alternative Employment: No employee, while on leave of absence, shall work or be gainfully employed either for himself, herself, or others unless express, written permission to perform such outside work has been granted by the City Manager or his/her designee. Any

employee on a leave of absence who is found to be working elsewhere without permission may be automatically terminated.

False Reason for Leave: Termination will occur if employee gives a false reason for a leave.

6.19 PAID PARENTAL LEAVE BENEFIT

Paid Parental Leave is a paid leave associated with the birth of an employee's own child or the placement of a child with the employee in connection with adoption or foster care. Paid Parental Leave must be taken within the first twelve (12) weeks after the birth, adoption, or placement of a child. Leave must be taken in blocks of no less than 40 hours at a time. Paid Parental Leave is not charged against the employee's other paid leave accruals, and the total amount of paid hours an employee is eligible to receive is 160 hours for each occurrence. The paid leave hours are compensated at the following levels:

- Less than one full year of service with the city – 40% of the employee's base pay rate at the time the leave is initiated.
- After one full year of service with the city – 60% of the employee's base pay rate at the time the leave is initiated.
- After five full years of service with the city – 100% of the employee's base pay rate at the time the leave is initiated.

If both parents are employees, only one may access the paid benefits of this policy per occurrence. Both, however, continue to be entitled to all other City benefits as outlined in the handbook. The total bank of 160 hours may be used no more than once per rolling twelve-month period starting from the last day this class of leave was used by an employee. Regular Part-Time, Temporary, and Seasonal employees are not eligible for Paid Parental Leave under this policy.

Continuation of Benefits
All employee elected benefits and paycheck deductions will continue to be provided during the Paid Parental Leave period under this policy at the same rates as in effect before the leave was taken regardless of length of service. Other employee benefits as outlined in the employee handbook will continue to accrue during the Paid Parental Leave period as if the employee were working their standard shifts.

Requirements for Obtaining Paid Leave
The employee must provide, to the employee's direct supervisor, 30 days' notice of the requested leave (or as much notice as practicable if the leave is not foreseeable) using the standard leave request form.

After the 160 hours of Paid Parental Leave have been exhausted, subsequent leave will be subject to the other leave policies as outlined in the employee handbook. The Family and Medical Leave Act (FMLA) allows eligible employees up to 12 workweeks of unpaid leave annually. Paid Parental Leave under this policy will run concurrently with FMLA leave. After Paid Parental Leave is exhausted, the employee may utilize any other accrued leave types, which will also run concurrently with FMLA leave.

Employees not eligible for FMLA leave should refer to the employee handbook after the 160 hours of Paid Parental Leave and any other leave have been exhausted regarding continuation of insurance coverage for employees on unpaid leave of absence.

6.20 MILITARY LEAVE

The City complies with applicable federal and state law regarding military leave and re-employment rights. Unpaid military leave of absence will be granted to members of the uniformed services in accordance with the Uniformed Services Employment and Reemployment Rights Act of 1994 (with amendments) and all applicable state law. Documentation of the need for the leave is required to be submitted to the City Manager. An employee returning from military leave of absence will be reinstated to his or her previous or similar job in accordance with state and federal law. You must notify the City Manager or his/her designee of your intent to return to employment based on requirements of the law. For more information regarding status, compensation, benefits and reinstatement upon return from military leave, please contact the City Manager or his/her designee.

6.21 JURY DUTY, WITNESS DUTY, AND VOTING LEAVE POLICY

If you are summoned for jury duty, please make scheduling arrangements with your supervisor as soon as you receive your summons or subpoena. It is the City's policy for all employees to receive the difference between the compensation for jury duty and their base rate of pay for the required service time. Employees will not be required to use any other form of leave during the time they are required to be away from work for jury duty.

If you are called to serve as a witness in court for the City, please notify your supervisor immediately. The City will compensate employees for the difference between their witness duty compensation and their base rate of pay for the required service time. Employees will not need to use any other form of leave during this period. For all other witness duties, please make scheduling arrangements with your supervisor as soon as possible to discuss the appropriate leave options.

If your work schedule prevents you from voting on Election Day, the City will allow you a reasonable amount of time off to vote. The time when you can go to vote will be at the discretion of your supervisor, consistent with applicable legal requirements.

6.22 BEREAVEMENT LEAVE

The City recognizes the importance of taking leave when a death in the family occurs. Employees are entitled to up to three (3) days off with pay for the funeral of an immediate relative (mother, father, sister, brother, spouse, child, mother-in-law, father-in-law, grandparent, or grandchild). Pay is based on the regular rate for an employee's regular work day or shift. Authorized leave without pay is available for extended funeral matters. Personal leave time may also be taken when necessary and accounted for using another form of leave. Employees taking bereavement leave must notify their supervisor or the City Manager of their intention to do so. The City may request documentation to support absences for bereavement leave.

6.23 WORKERS' COMPENSATION INSURANCE

Workers' compensation is a no-fault system designed to provide benefits to all employees for work related injuries. Workers' compensation insurance coverage is paid for by the employer and governed by state law. The workers' compensation system provides for coverage of medical treatment and expenses, occupational disability leave, rehabilitation services, as well as payment for lost wages due to work related injuries. If you are injured on the job, no matter how slightly, you are to report the incident immediately to your supervisor. Consistent with applicable state law, failure to report an injury within a reasonable period of time could jeopardize your claim for benefits.

To receive workers' compensation benefits, notify your supervisor immediately of your claim. If your injury is the result of an on-the-job accident, you must fill out an accident report. You may be required to submit a medical release before you can return to work.

6.24 UNEMPLOYMENT COMPENSATION INSURANCE

Unemployment compensation insurance is paid for by the City and provides temporary income for employees who have lost their job under certain circumstances. Your eligibility for unemployment compensation will, in part, be determined by the reasons for your separation from the City and by state law.

6.25 COBRA

The Consolidated Omnibus Budget Reconciliation Act (COBRA) provides the opportunity for eligible employees and their beneficiaries to continue health insurance coverage under the City health plan when a "qualifying event" could result in the loss of eligibility. Qualifying events include resignation, termination of employment, death of an employee, reduction in hours, a leave of absence, divorce or legal separation, entitlement to Medicare, or where a dependent child no longer meets eligibility requirements.

6.26 PERSONNEL AND MEDICAL RECORDS

The City maintains a personnel and medical file for every employee in a secure location. Medical records will be kept in a separate folder. The City Police Department maintains additional files as outlined in civil service regulations. Every effort will be made to keep your personnel and medical records confidential. Access is on a "need-to-know" basis only. This includes, but is not limited to, supervisors and others in management reviewing the file for possible promotion, transfer, or layoff.

If an employee wishes to review his or her personnel or medical file he or she may do so after giving the City Manager reasonable notice. Inspection must occur in the presence of a City official. All requests by an outside party for information contained in your personnel file will be directed to the City Manager, who is the only individual authorized to give out such information. Disclosure to third parties will be made only pursuant to the employee's written authorization or court order or subpoena.

SECTION 7 GENERAL POLICIES

7.01 EMPLOYEE SUGGESTIONS/OPEN DOOR POLICY

We encourage you to share suggestions for continued improvement and welcome your ideas for ways to enhance job performance, service, delivery, and meeting citizen's needs. Discuss your ideas with your supervisor or the City Manager.

We also encourage you to share valuable insights from seminars, conferences, or other outside sources of information you believe would add value to the City.

Understand that any suggestions, innovations, inventions, or other matter created by you on work time or with City tools or property are the property of the City.

7.02 CITY BULLETIN BOARDS

The City maintains official bulletin boards located in the lunchroom at the Municipal Annex (661 S. George St.), on the second floor by the elevator in the City Hall and at the maintenance yard (34 N. Water St.) for providing employees with its official notices, including wage and hour laws, changes in policies, and other employment-related notices. Only authorized personnel can add and remove notices from the bulletin boards.

7.03 SOCIAL MEDIA POLICY

The City understands that social media can be a fun and rewarding way to share your life and opinions with family, friends, and others around the world. However, use of social media also presents certain risks and carries with it certain responsibilities. To assist you in making responsible decisions about your use of social media, we have established these guidelines for appropriate use of social media.

This policy applies to all employees who work for the City.

Guidelines

In the rapidly expanding world of electronic communication, social media can mean many things. Social media includes all means of communicating or posting information or content of any sort on the Internet, including to your own or someone else's web log or blog, journal or diary, personal website, social networking or affinity website, web bulletin board or a chat room, whether associated or affiliated with the City, as well as any other form of electronic communication.

The same principles and guidelines found in the City's policies and these basic beliefs apply to your activities online. Ultimately, you are solely responsible for what you post online. You may be personally responsible for any litigation that may arise should you make unlawful defamatory, slanderous, or libelous statements against any citizen, elected official, supervisor, or employee of the City. Before creating online content, you may want to consider some of the risks and rewards that are involved.

Know and Follow the Rules

Carefully read these guidelines, the City's Ethics Code, Standards of Conduct, and EEO Statement and Non-Harassment Policy, and ensure your postings are consistent with these policies. Postings that include unlawful discriminatory remarks, harassment (as defined by our EEO policy), and threats of violence or other unlawful conduct will not be tolerated and may subject you to disciplinary action up to and including termination.

You Are Encouraged to Show Respect
The City cannot force or mandate respectful and courteous activity by employees on social media during non-working time. However, everyone should be aware of the negative impact comments of this nature can have on the workplace and relationships with others. In addition, please keep in mind that you may be more likely to resolve work-related disputes by speaking directly with your co-worker, your supervisor, or the City Manager than by posting complaints to a social media outlet. Nevertheless, if you decide to post complaints or criticism, avoid using statements, photographs, video, or audio that reasonably could be viewed as unlawful, slanderous, threatening, or that might constitute unlawful harassment (as defined by our EEO policies). Examples of such conduct might include defamatory or slanderous posts meant to harm someone's reputation or posts that could contribute to a hostile work environment on the basis of age, race, color, national origin, ancestry, religion, sex, familial status, physical or mental disability, genetic information (including testing and characteristics), veteran status, uniformed service member status, blindness, sexual orientation, gender identity, or any other status protected by federal, state, or local laws or City policy.

Honesty and Accuracy
You should understand that honesty and accuracy are important when posting information or news, and that it is good practice to correct a mistake quickly. You may want to be open about any previous posts you have altered. Remember that the Internet archives almost everything; therefore, even deleted postings often can be searched.

Posting Information
When posting information:
- maintain the confidentiality of information that is legally protected from public disclosure
- do not create a link from your blog, website, or other social networking site to a City website that identifies you as speaking on behalf of the City
- never represent yourself as a spokesperson for the City. If the City is a subject of the content you are creating, do not represent yourself as speaking on the City's behalf
- respect copyright, trademark, and similar laws and use such protected information in compliance with applicable legal standards.

Using Social Media at Work
Refrain from using social media while on your work time, unless it is work related as authorized by your supervisor and consistent with the City's equipment policy.

Retaliation Is Prohibited
The City prohibits taking negative action against any employee for reporting a possible deviation from this policy or for cooperating in an investigation. Any employee who retaliates against another employee for reporting a possible deviation from this policy or for cooperating in an investigation will be subject to disciplinary action, up to and including termination.

Media Contacts
Employees should not speak to the media on the City's behalf without contacting the City Manager, Police Chief, or Utility Manager as appropriate. All media inquiries for official City responses should be directed at one of these individuals.

For More Information
If you have questions or need further guidance, please contact the City Manager.

Nothing in this policy is designed to interfere with, restrain, or prevent employee communications regarding wages, hours, or other terms and conditions of employment, or to restrain employees in exercising any other right protected by law. Employees have the right to engage in or refrain from such activities.

7.04 NON-SOLICITATION/NON-DISRUPTIVE POLICY

To avoid disruption of City operations or disturbance of employees, visitors, and others, the City has implemented a Non-Solicitation Policy. For purposes of the Non-Solicitation Policy, "solicitation" includes selling items or services, requesting contributions, and soliciting or seeking to obtain membership in or support for any organization. Solicitation performed through verbal, written, or electronic means is covered by the Non-Solicitation Policy.

Employees are prohibited from soliciting other employees during their assigned working time. For this purpose, working time means time during which either the soliciting employees or the employees who are the object of the solicitation are expected to be actively engaged with assigned work. Employees may conduct solicitations during their lunch period, breaks, or other authorized non-working time, so long as they do so when the other employees are also on non-working time.

To avoid inappropriate litter, clutter, and safety risks, employees may not distribute literature or other non-work-related items in working areas at any time. Working areas do not include break/rest areas, lunch rooms, or parking lots.

7.05 DRIVING RECORD

All employees required to operate a motor vehicle as part of their employment duties must maintain a valid driver's license and acceptable driving record. The City may run a motor vehicle department check to determine an employee's driving record. It is your responsibility to provide a copy of your current driver's license for your personnel file. Any changes in your driving record, including, but not limited to, driving infractions, must be reported to your supervisor.

State law requires all motorists to carry auto liability insurance. It is against the law to drive without insurance. If an employee must use their personal vehicle to conduct City business, which must first be approved by the City Manager as noted earlier in this handbook, the employee must provide management with a current proof of insurance statement or card. A new proof of insurance is required every time your policy expires and renews.

7.06 TELECOMMUTING POLICY

Telecommuting is defined as an employee working a full or partial workday from home or some other alternate work site.

The City will make telecommuting available to employees when it benefits organizational and departmental needs and only after approval by the City Manager. This option may not be available in some job classifications due to business needs. Those telecommuting will be subject to the same performance standards as if they were working at their regular job site. Telecommuting may be a reasonable accommodation, and if you are requesting

telecommuting as a reasonable accommodation you should consult with your supervisor as soon as possible.

7.07 USE OF COMPANY VEHICLES

City vehicles are to be used for City business only. Personal or outside business use must be discussed with and approved by your supervisor.

Drivers of City vehicles are to immediately report all infractions or violations while driving a City vehicle and all restrictions, suspensions, or revocations against their driver's license to their supervisor.

When a City vehicle cannot be operated, is unsafe for use, or has been damaged, notify your supervisor immediately. Members of the City Police Department must follow the Department's internal procedure concerning Department vehicles.

The driver of a City vehicle is responsible for the vehicle while in his or her charge and must not permit unauthorized persons to drive it.

The driver is responsible for the daily housekeeping of the vehicle. It is to remain clean and uncluttered.

No person shall operate a motor vehicle while under the influence of alcohol or a chemical substance or other substance that can impair judgment.

Moving violations that appear on the annual state department of motor vehicle check may result in suspension of rights to drive a City vehicle or drive a personal vehicle on City business Suspension of rights will continue until such time as the City Manager and the employee's supervisor have determined is appropriate. If there are persistent and ongoing problems with driving infractions, and driving a vehicle is a part of successful execution of job responsibilities, termination of employment is possible.

7.08 VOICEMAIL, EMAIL, AND INTERNET POLICY

This Voicemail/Email/Internet Policy is intended to provide each employee of the City with the guidelines associated with the use of the City's voicemail/email/Internet system (the system). This policy applies to all employees, contractors, vendors, and any others accessing and/or using the City's system through onsite or remote terminals.

General Provisions

- The system, and all data transmitted or received through the system, are the exclusive property of the City. No individual should have any expectation of privacy in any communication over this system. Any individual permitted to have access to the City's system will be given a voicemail, email and/or Internet address and/or access code, and will have use of the system, consistent with this policy.
- The City reserves the right to monitor, intercept, and/or review all data transmitted, received, or downloaded over the system. Any individual who is given access to the system is hereby given notice that the City will exercise this right periodically, without prior notice and without the prior consent of the employee.

- The City's interests in monitoring and intercepting data include but are not limited to: protection of City trade secrets, proprietary, and similar confidential sensitive information that is protected from public disclosure; managing the use of the City's computer system; and/or assisting the employee in the management of electronic data during periods of absence. No individual should interpret the use of password protection as creating a right or expectation of privacy. To protect everyone involved, no one can have a right or expectation of privacy with regards to the receipt, transmission or storage of data on the City's Voicemail/Email/Internet system.

Any employee who violates the policies in this handbook will be subject to corrective action, up to and including termination of employment. If necessary, the City will also advise law enforcement officials of any illegal conduct.

7.09 TELEPHONE USE

Our phones are primarily for work-related communications. Unless there is an emergency, please use them only for City business. Limit personal calls and brief communications during break periods where possible. Casual telephone conversations with friends and relatives during working hours are strongly discouraged. Telephone use is also subject to the Voicemail/Email/Internet Usage Policy.

7.10 CITY-PROVIDED CELL PHONE/MOBILE DEVICE POLICY

The purpose of this policy is to provide guidance to employees regarding eligibility for cell phones and plans used to conduct city business, and the appropriate use of the phone and plan.

An employee must have a legitimate business need for a cell phone/mobile device and the issuance of a city-provided phone or device must be approved by the City Manager, Police Chief, or Utility Manager as appropriate. The typical legitimate reasons why an employee may need a cell phone/mobile device include frequent traveler needs or when the employee is a member of key personnel who must be immediately reachable in the event of an emergency.

When the cell phone/mobile device is used for personal reasons and the activity results in additional cost to the City, the individual is responsible for the cost of that usage, including all applicable taxes.

If a city-provided cell phone/mobile device has a flat rate airtime/data plan, the user is responsible for reimbursing the City when personal activities cause the plan threshold to be exceeded. The employee, with concurrence of an authorized signer on the account, should determine the amount of personal use that caused the usage to exceed the plan and reimburse the City for that amount plus all applicable taxes.

Employees who drive a vehicle during their employment may not use any cell phone/mobile device or other communication device while driving unless the device is equipped or configured with a "hands-free" listening/speaking option, and the "hands-free" device is in fact utilized by the employee. This option must be approved by the City Manager, Police Chief, or Utility Manager as appropriate.

Use of electronic communication devices by members of the City Police Department is governed by West Virginia Code §17C-14-15.

The City owns and remains entitled to all city-provided cell phone/mobile devices. At the time of employment termination, all such equipment and passwords must be returned to the City in operable condition.

7.11 PERSONAL CELL PHONE/MOBILE DEVICE POLICY

While the City permits employees to bring personal cell phones and other mobile devices (i.e. smart phones, PDAs, tablets, laptops) into the workplace, employees must not permit the use of such devices to interfere with their job duties or impact workplace safety and health.

Use of personal cell phones and mobile devices, for purposes other than work, can be distracting and disruptive and cause a loss of employee productivity. As a result, employees should primarily use such personal devices during non-working time, such as breaks and meal periods. During this time, employees should use their device in a manner that is courteous to those around them. Outside of work-related purposes, the use of such devices should be kept at a minimum and limited to emergency use only. Employees with devices that have a camera and/or audio/video recording capability are restricted from using those functions on City property unless authorized in advance by their supervisor or the City Manager or used in a manner consistent with the rights of employees to engage in concerted activity under section 7 of the National Labor Relations Act (NLRA).

Employees are expected to comply with City policies regarding the protection of the employer's confidential and proprietary information when using personal devices.

While operating a vehicle on City time and for a purpose other than work, the City requires that the driver's personal cell phone/mobile device be turned off. An employee that needs to make or receive a phone call should pull off the road to a safe location unless he or she has the correct hands-free equipment for the device that follows applicable state laws.

Employees may not connect their personal devices to the City's network or to City's computers, printers, etc., unless doing so is for a work-related purpose.

Nothing in this policy is intended to prevent employees from engaging in protected concerted activity under the NLRA.

Violation of this policy will subject an employee to disciplinary action up to and including termination of employment.

7.12 MAIL USE

Employees are required to limit usage of the City's mail service to business purposes only. You may not use the City address to receive personal mail. Do not use the City postage meter for your personal mail. If you notice any suspicious packages or envelopes, please report this to your supervisor or the City Manager immediately.

7.13 ACCOMMODATIONS FOR NURSING MOTHERS

The City will provide nursing mothers reasonable unpaid break time to express milk for their infant children for up to one year following the child's birth.

To ensure privacy, nursing mothers will be provided a private room, other than a restroom, to express their milk. The room will be clearly designated and either have a lock or a sign on the door to indicate when the room is in use.

Nursing mothers will also be provided with a refrigerator to store their breast milk. Employees are responsible for labeling their milk with their name and the date on which the milk was expressed.

Nursing mothers are encouraged to discuss the length and frequency of breastfeeding breaks with their supervisor.

7.14 SECURITY

Every employee is responsible for helping to make this a secure work environment. Upon leaving work, lock all desks, lockers, and doors protecting valuable or sensitive material in your work area and report any lost or stolen keys, passes, or other similar devices to your supervisor immediately. You should refrain from discussing with nonemployees specifics regarding the City's security systems, alarms, passwords, etc.

We also request that you immediately advise your supervisor or the City Manager of any known or potential security risks and/or suspicious conduct of employees, customers, or guests of the City. Safety and security is the responsibility of every employee and we rely on you to help us keep our premises secure.

7.15 COMPUTER SECURITY AND COPYING OF SOFTWARE

Software programs purchased and provided by the City are to be used only for creating, researching, and processing City-related materials. By using the City's hardware, software, and networking systems you assume personal responsibility for their use and agree to comply with this policy and other applicable City policies, as well as city, state, and federal laws and regulations.

All software acquired for or on behalf of the City or developed by City employees or contract personnel on behalf of the City is and shall be deemed City property. It is the policy of the City to respect all computer software rights and to adhere to the terms of all software licenses to which the City is a party. The City Manager and Operations Manager or equivalent position are responsible for enforcing these guidelines.

City users may not illegally duplicate any licensed software or related documentation. Unauthorized duplication of software may subject users and/or the City to both civil and criminal penalties under the United States Copyright Act. To purchase software, users must obtain the approval of the City Manager or his or her designee. All software acquired by the City must be purchased through the Operations Manager or his/her designee.

Users may not duplicate, copy, or give software to any outsiders including clients, contractors, citizens, and others. City users may use software on local area networks or on multiple machines only in accordance with applicable license agreements entered by the City.

7.16 THIRD-PARTY DISCLOSURES

From time to time, the City may become involved in news stories or potential or actual legal proceedings of various kinds. When that happens, lawyers, former employees, newspapers,

law enforcement agencies, and other outside persons may contact City employees to obtain information about the incident or the actual or potential lawsuit.

If you receive such a contact, you should not speak on behalf of the City and should refer any call requesting the City's position to the City Manager, Police Chief, or Utility Manager as appropriate. If you have any questions about this policy or are not certain what to do when such a contact is made, please contact the City Manager.

7.17 EMPLOYEE PRIVACY AND RIGHT TO INSPECT

City property, including but not limited to, lockers, phones, computers, tablets, desks, work place areas, vehicles, or machinery, remains under the control of the City and is subject to inspection at any time, without notice to the employee, and without the employee's presence. Employees have no expectation of privacy in any of these areas. We assume no responsibility for the loss of, or damage to, any employee property maintained on the City's premises including that kept in lockers and desks.

7.18 POST-EMPLOYMENT REFERENCE POLICY

The City's policy is to confirm dates of employment and job title only. With written authorization, the City may release additional information required for employment verification. A release will include a statement that holds the City and the prospective employer harmless from any claim related to any information provided in response to that reference. Please contact the City Manager or his/her designee for the release form. All verification of employment will be completed by the City Manager or his/her designee. Release of additional information may be subject to the requirements of the state's Freedom of Information Act.

7.19 GENERAL SAFETY POLICY

It is the responsibility of every employee of the City to maintain a healthy and safe work environment. Please report all safety hazards and occupational illnesses or injuries to your supervisor immediately and complete an occupational illness or injury form as needed. Failure to follow the City's health and safety rules can result in disciplinary action, up to and including termination of employment.

7.20 WORKPLACE SAFETY (POLICY AGAINST VIOLENCE)

The safety and security of our employees, residents, tenants, vendors, contractors, and the public is of essential importance. Threats or acts of violence made by an employee against another person's life, health, well-being, family, or property will not be tolerated. Any act of intimidation, threat of violence, or act of violence committed against any person on City property is prohibited. The following definitions apply:

- Intimidation: A physical or verbal act toward another person, the result of which causes that person to reasonably fear for his or her safety or the safety of others.
- Threat of violence: A physical or verbal act which threatens bodily harm to another person or damage to the property of another.
- Act of violence: A physical act, whether it causes actual bodily harm to another person or damage to the property of another.
- No person shall possess or have control of any firearm, deadly weapon, or prohibited knife, as legally defined, while on City property, except as required in the lawful course of business or as authorized by state law.

- The following are prohibited:
- Any act or threat of violence made by an employee against another person's life, health, well-being, family, or property.
- Any act or threat of violence, which endangers the safety of employees, residents, tenants, vendors, contractors, or the public.
- Any act or threat of violence made directly or indirectly by words, gestures, symbols, social media, or email.
- Use or possession of a weapon on any premises managed by the City as permitted by state law.

Exception: A firearm that the employee lawfully possesses may be stored in the employee's vehicle so long as:

a) the employee is lawfully present on the premises;
b) the firearm is locked inside of the vehicle (or is locked in the vehicle's trunk, glove box, or other interior compartment; locked in a container securely fixed to the vehicle; or secured and locked to the vehicle by the use of attachment and lock);
c) the vehicle is in a parking lot;
d) the firearm is out of view; and
e) the firearm is kept for lawful purposes.

Please note, however, that pursuant to law (West Virginia Code Section 61-7-14), The City of Charles Town has no duty of care related to an employee's possession of a firearm as described in this exception and will not be liable in a civil action based on any actions or inactions taken in compliance with this exception. Apart from this limited exception, employees may not possess weapons on the City of Charles Town's premises, including but not limited to carrying or using the firearm; or removing the firearm from its locked position.

It is a requirement that employees report to their supervisor or the City Manager, in accordance with this policy, any behavior that compromises the City's ability to maintain a safe work environment. All reports will be investigated immediately and kept confidential, except where there is a legitimate need to know.

Employees who violate this policy may be subject to criminal charges as well as disciplinary action up to and including immediate termination of employment.

SECTION 8 TRADE SECRETS & INVENTIONS

8.01 EMPLOYEE INVENTIONS

Any employee invention created, in whole or in part, during an employee's work hours, or from the use of the City's equipment or facilities, is a "work for hire" and the property of the City.

Any employee who intends to develop and maintain property rights in any invention, which relates in any way to the City's products or services, is required to obtain a written waiver of this policy, signed by both the employee and the City Manager.

8.02 CONFIDENTIALITY AND NONDISCLOSURE OF TRADE SECRETS

As a condition of employment, City employees are required to protect the confidentiality of trade secrets, proprietary information, and similar confidential information about our City, citizens, or operations that is restricted from release by public law. Access to this information should be limited to a "need to know" basis and should not be used for personal benefit. All other requests for information from the public should be released using a Freedom of Information Act process adopted by the City that includes the approval of the City Manager, or his/her designee.

Violation of this policy may result in the disciplinary action or termination of any employee, as well as subject the employee to civil liability.

Thank you for reading our employee handbook. We hope it has provided you with an understanding of the City's values, history, and structure as well as our current personnel policies and guidelines. We look forward to working with you to create a successful city and a safe, productive, and pleasant workplace. If you have any questions or need further clarification, please do not hesitate to reach out to your supervisor or the HR department.

Welcome to our team!
Robert M. Trainor, Mayor

ACKNOWLEDGMENT OF RECEIPT AND REVIEW

By signing below, I acknowledge that I have received a copy of the Employee Handbook and understand that it is my responsibility to read the Employee Handbook in its entirety. I agree to comply with the rules, policies, and procedures set forth herein, as well as any revisions made to the Employee Handbook in the future. I also understand that if I violate the rules, policies, and procedures set forth herein that I may be subject to disciplinary action, up to and including termination of my employment.

I understand that the Employee Handbook contains information about the employment policies and practices of the City. I understand that the policies outlined in this Employee Handbook are management guidelines only, which in a developing organization will require changes from time to time. I understand that the City retains the right to make decisions involving employment as needed to conduct its work in a manner that is beneficial to the employees and the City. I understand that this Employee Handbook supersedes and replaces all prior Employee Handbooks and any inconsistent verbal or written policy statements.

The City reserves the right to revise, delete, and add to the provisions of this Employee Handbook at any time without further notice. I understand that no oral statements or representations can change the provisions of this Employee Handbook. I understand that this Employee Handbook is not intended to create contractual obligations with respect to any matters it covers and that the Employee Handbook does not create a contract guaranteeing that I will be employed for any specific period of time. I understand nothing in this handbook is created to infringe on any available legal rights.

I understand that this Employee Handbook refers to current benefit plans maintained by the City and that I must refer to the actual plan documents and summary plan descriptions as these documents are controlling.

If I have questions about the content or interpretation of the Employee Handbook, I will ask my supervisor or the City Manager.

_____ _____

Signature of Employee Date

_____

Print Name

City Council
101 East Washington Street
Charles Town, WV 25414

Meeting: 05/05/25
Department: City Council
Category: Report
Initiator:

SCHEDULED

AGENDA ITEM (ID #)

2025-530: Article 907 - Outdoor Dining

ATTACHMENTS:

- 2025-003 - Article 907 Outdoor Dining - signed April 7th.pdf

ARTICLE 907
Outdoor Dining

907.01 Purpose and intent.

907.02 Compliance with Federal, State, and local laws and regulations.

907.03 Definitions.

907.04 Outdoor dining permit.

907.05 Denial or revocation of permit.

907.06 Penalty.

907.01 PURPOSE AND INTENT.

The City of Charles Town City Manager is hereby authorized to promulgate reasonable rules and regulations regarding the administration of the requirements of this article, to review all outdoor dining area permit applications and to either grant or deny such permits under this article. Copies of such regulations, as amended from time to time, shall be maintained by the City Manager, posted on the City's website and filed in the City Clerk's office, and shall be available to interested parties at all reasonable times.

907.02 COMPLIANCE WITH FEDERAL, STATE, AND LOCAL LAWS AND REGULATIONS.

(a) The operation of an outdoor dining area pursuant to a permit granted under this article shall comply with the Americans with Disabilities Act, all provisions of state and local building and fire codes, as well as all state and local health laws and regulations regarding the service and preparation of food. The operations of an outdoor dining area shall also be conducted in accordance with the code provisions and regulations of the West Virginia Alcoholic Beverage Control Administration (WVABCA). Nothing in this article shall be intended to alter or abridge any applicable federal, state, and local laws or the operator's responsibility to comply with all code provisions and regulations of the WVABCA.

(b) Nothing in this article shall be intended to alter or abridge the prohibition of service of alcoholic beverages or possession thereof on public property in the city, except that any permitted outdoor dining area operator and patrons of permitted operator's outdoor dining area shall be deemed to be exempt from this prohibition during the hours of operation of the outdoor dining area and only within the confines of said area.

907.03 DEFINITIONS.

For the purposes of this article, the following definitions shall apply unless the context clearly indicates or requires a different meaning.

(a) *Alcoholic beverages* means alcoholic liquors as defined by W. Va. Code section 60-1-5(2); nonintoxicating beer as defined by W. Va. Code section 60-1-5(13); wine as defined by W. Va. Code section 60-1-5(22); and any other alcohol the sale and distribution of which is controlled or regulated by WVABCA.

(b) *Commissioner* means the Commissioner of the West Virginia Alcohol Beverage Control Administration.

(c) *Operator* shall mean person, organization, proprietorship, corporation, or other similar entity lawfully operating a business located in the city, that possesses a valid State of West Virginia food vendor's permit and has been issued an outdoor dining area permit.

(d) *Outdoor Dining* means an area outside of the public right-of-way made available for private use by a restaurant, café, bar or other establishment to serve food and/or beverages to entrants, which may include service of alcoholic beverages by licensees authorized to do so by the Commissioner, and which is (1) Outside and not served by an HVAC system for air handling services and use outside air; (2) Open to the air; and (3) Not enclosed by fixed or temporary walls; however, the commissioner may seasonally approve exceptions for a partial enclosure with up to three temporary or fixed walls for areas serving alcoholic beverages, by the Commissioner.

907.04 OUTDOOR DINING PERMIT

(a) Purpose and applicability. The provisions in this section shall apply to outdoor dining that occurs on private property incidental to an otherwise permitted use, and where allowed in compliance with applicable zoning code regulations. Whenever outdoor dining includes areas in both public and private property, the provisions of this section and of the applicable section related to public property apply.

(b) Permit authorized; outdoor dining permitted. Outdoor Dining is permitted when in compliance with all applicable provisions of the Zoning Code and any other applicable provision(s) of the City Code. When any applicant seeks an Outdoor Dining permit to obtain approval for Outdoor Dining from WVABCA or another entity (an "Outdoor Dining Permit"), the City will review applications and may issue permits under this section. Each Outdoor Dining. Permit issued will be valid from January 1, or the date the application is approved, through December 31, or for the specific date(s) stated on the permit.

(c) Standards. All permits issued pursuant to the terms of this section shall conform to all of the following requirements. No permit shall be issued that does not comply with these standards.

(1) The outdoor dining area shall not extend beyond the boundaries of the subject property, and shall not be located or utilized in a manner which causes an obstruction of a public walkway or interferes with the flow of pedestrian or other traffic.

(2) The proposed outdoor dining activity shall not interfere with the use of any public walkway by neighboring property owners and tenants.

(3) The proposed outdoor dining activity shall not unlawfully alter the associated indoor dining use of the subject property.

(4) The subject property shall have previously received all necessary zoning-related approvals and shall be in compliance with those approvals.

(5) A permit shall be issued only to the owner and operator of the eating establishment or restaurant that will provide the outdoor dining - private area

(6) A permit shall not be transferable to any entity or person, and is valid only as to the original applicant, unless the City Manager gives prior written approval for the transfer and the transferee accepts all terms and conditions of the permit in writing.

(7) The outdoor dining area shall be kept in a good state of repair and maintained in a clean, safe, and sanitary condition.

(8) The outdoor dining area shall be located in a manner that will not interfere with visibility, vehicular or pedestrian mobility, or access to City or public utility facilities. The determination of whether an incidental outdoor dining area or any part thereof interferes shall be made by the City Manager at the time of application based on the characteristics of each proposed site.

(9) The City may place additional conditions upon the issuance of the permit to ensure the protection of the public walkway, the rights of all adjoining property owners, and the health, safety, and welfare of the public.

(10) The hours of operation for outdoor dining on private property shall be limited to the hours of operation for the associated indoor dining, unless otherwise authorized.

(11) Permits and outdoor dining on private property areas shall conform with all other applicable City and other governmental requirements including, without limitation, zoning and design review, except as otherwise provided herein.

907.05 DENIAL OR REVOCATION OF PERMIT.

Any permit approved under this Ordinance is a privilege granted to the operator that may be revoked by the city upon finding by the City Manager that the operator has violated any federal, state or city law applicable to the outdoor dining area or the operation thereof, including but not limited to, compliance with all code provisions and regulations of the WVABCA, that the continued operation of the outdoor dining area poses a threat to the health, safety or welfare of the public, or that the outdoor dining area constitutes a public nuisance.

907.06 PENALTY.

Any Operator who violates any provision of this article shall, upon conviction, be fined up to $500.00 per day. Each day any violation of this article shall continue shall constitute a separate offense.

First Reading: March 3, 2025

Second Reading: April 7, 2025

Robert M. Trainor
Mayor

John Nissel
City Manager/Clerk