CITY OF CHARLES TOWN
PLANNING COMMISSION
AGENDA • FEBRUARY 10, 2026

Commission/Board Meeting **CITY HALL** **7:00 PM**

101 E Washington Street, Charles Town, WV 25414

1. CALL TO ORDER

2. APPROVAL OF MINUTES

2.1 : DRAFT December 22, 2025 minutes
12-22-2025 PC MINUTES_DRAFT.pdf

3. UNFINISHED BUSINESS

4. NEW BUSINESS

4.1 : **Public Hearing**: *SLD2025-06* - Huntfield Master Plan Amendment
1. Staff Report.pdf
2. Application.pdf
3. Current Master Plan.pdf
4. Revised Master Plan.pdf
5. Narrative.pdf
6. Public Comments.pdf

4.2 : Election of Officers:
-Chair
-Vice-Chair
-Secretary

5. ADJOURNMENT

6. NOTICE: The Public May View the Meeting Live by Clicking on the Event Link at:

https://www.charlestownwv.us/government/agendas_minutes.php

Planning Commission
101 East Washington Street
Charles Town, WV 25414

Meeting: 02/10/26
Department: Planning Commission
Category: Report
Initiator:

SCHEDULED

AGENDA ITEM (ID #)

DRAFT December 22, 2025 minutes

ATTACHMENTS:

- 12-22-2025 PC MINUTES_DRAFT.pdf

CITY OF CHARLES TOWN
PLANNING COMMISSION •
MINUTES DECEMBER 22, 2025

Committee Meeting **CITY HALL** **7:00 PM**

101 E Washington Street, Charles Town, WV 25414

1. CALL TO ORDER

Present: Ann Paonessa – Chair
Jessica Derr
Jeff Hynes
Zakhary Dunning

Kevin Long - Absent

James Newman, City Staff - Zoning Administrator

2. APPROVAL OF MINUTES

2.1: Regular Session Minutes of November 24, 2025

Motion to approve the meeting minutes with corrections:

RESULT:	**Approved**
MOVER:	Derr
SECONDER:	Hynes
AYES:	Derr, Hynes, Dunning, Paonessa

3. UNFINISHED BUSINESS
None

4. NEW BUSINESS

4.1: Public Hearing: *SLD2025-04: – Vinton Hayes/Augustine Manor – Preliminary Plan*

Staff presentation.

The Commission discussed the project.

Applicants Stephanie Smith with Elm Street Development & Matt Pohlhaus with IMEG Engineering spoke. Matt stated he has addressed all the City comments, and still had two (2) comments from the City's 3rd party engineering firm which he had to address.

Commissioners had questions about tree landscaping requirements, excess lighting, and garage placement for lot 137. Matt stated that they will reduce the amount of lighting. Matt explained why the driveway was designed different to others in the development.

DRAFT

Motion to open public hearing:

RESULT:	**Approved**
MOVER:	Dunning
SECONDER:	Derr
AYES:	Derr, Hynes, Dunning, Paonessa

No comments.

Motion to close public hearing:

RESULT:	**Approved**
MOVER:	Hynes
SECONDER:	Derr
AYES:	Derr, Hynes, Dunning, Paonessa

Motion to approve the Preliminary Plan as presented with the following conditions:

1. Add missing trees in front of the townhomes on Langford Drive.
2. The Preliminary Plan must be reviewed and approved by Kimley-Horn and the Subdivision Administrator prior to approval of the Final Plan set.
3. Street lighting is to be separated to a distance of up to 200 ft. from the current distance of 100 ft.; the intent is to reduce the proposed lighting by half.

RESULT:	**Approved**
MOVER:	Derr
SECONDER:	Hynes
AYES:	Derr, Hynes, Dunning, Paonessa

4.2: Public Hearing: *SLD2025-07: – Huntfield Phase 4 – Preliminary Plan*

Staff presentation.

The applicant, Matt Monahan with DR Acquisition was available virtually and discussed the project. The Commission had questions about lighting and tree landscaping installation, and the applicant gave a timeline for development.

Motion to open public hearing:

RESULT:	**Approved**
MOVER:	Dunning
SECONDER:	Derr
AYES:	Derr, Hynes, Dunning, Paonessa

No comments.

Motion to close public hearing:

RESULT:	**Approved**
MOVER:	Hynes
SECONDER:	Derr
AYES:	Derr, Hynes, Dunning, Paonessa

DRAFT

Motion to approve the Preliminary Plan as presented:

RESULT:	**Approved**
MOVER:	Hynes
SECONDER:	Derr
AYES:	

Commission discussion to amend the motion.

Motion to amend the previous motion to approve the Preliminary Plan with the following conditions:

1. All driveways located in Zone 2 shall be 25 feet in depth per the requirements of the Conditions of Annexation.
2. The trail shall have an asphalt topcoat per the City's design standards.
3. Driveways for the townhomes are to be designed to the same style of those in Union Ridge.
4. The street and parking lot lighting is to be of a neutral warmth.

RESULT:	**Approved**
MOVER:	Hynes
SECONDER:	Derr
AYES:	Derr, Hynes, Dunning, Paonessa

4.3: Public Hearing: *WV2025-01: – 231 N Samuel St – Landscaping Waiver*

Staff presentation.

The Commission discussed the types of plants to be installed. Applicant Eddie Yousef spoke about the issues with utility liens on the site and their impact on planting options.

Motion to open public hearing:

RESULT:	**Approved**
MOVER:	Derr
SECONDER:	Hynes
AYES:	Derr, Hynes, Dunning, Paonessa

No comments.

Motion to close public hearing:

RESULT:	**Approved**
MOVER:	Hynes
SECONDER:	Dunning
AYES:	Derr, Hynes, Dunning, Paonessa

Motion to approve the Landscaping Waiver as presented to allow shrubs along N Samuel St due to overhead utility wires:

RESULT:	**DENIED**
MOVER:	Derr
SECONDER:	Dunning
AYES:	Derr, Dunning
NAYS:	Paonessa, Hynes

DRAFT

4.4: Commission Review: *2026 Draft Calendar*

Staff presented the calendar for 2026.

Motion to approve the 2026 Calendar:

RESULT:	**Approved**
MOVER:	Hynes
SECONDER:	Derr
AYES:	Derr, Hynes, Dunning, Paonessa

5. ADJOURNMENT

Motion to adjourn:

RESULT:	**Approved**
MOVER:	Hynes
SECONDER:	Dunning
AYES:	Derr, Hynes, Dunning, Panoessa

Meeting adjourned at 8:08 pm.

DRAFT

Planning Commission
101 East Washington Street
Charles Town, WV 25414

Meeting: 02/10/26
Department: Planning Commission
Category: Report
Initiator:

SCHEDULED

AGENDA ITEM (ID #)

Public Hearing: *SLD2025-06* - Huntfield Master Plan Amendment

ATTACHMENTS:

- 1. Staff Report.pdf
- 2. Application.pdf
- 3. Current Master Plan.pdf
- 4. Revised Master Plan.pdf
- 5. Narrative.pdf
- 6. Public Comments.pdf

Final Plans Change Review

SLD2025-06

Date: For the January 26, 2026 Planning Commission meeting
Applicant: Matthew Monahan on behalf of DR Acquisitions LLC
Property Owner: DR Acquisitions LLC
Report by: James Newman, City Planner, Zoning/Subdivision Administrator.
Proposal: Amending Final Plans
Property Location: Huntfield Community
Current Zoning: Neighborhood Residential (NR)



PROJECT OVERVIEW

Request by DR Acquisitions to modify a final plan for Huntfield Master Plan. The changes alter the road layout and unit type.

FINAL PLAN – APPLICATION REVIEW DIVERGENCE

This item is presented to the public and the Planning Commission under Subdivision Ordinance Section 1332.09, *Amendment of Approved Final Plan and Plats*, specifically under section 2. That Code language states:

2. *If the amendments and changes proposed in an application do not qualify for approval by the Subdivision Administrator under the test in Section 1332.09(B)(1), then the Planning Commission shall consider the application to amend after a publicly-noticed public hearing. The Planning Commission may approve, approve with conditions, or deny the proposed amendment. The proposed amendment will be approved if it meets all requirements of this Ordinance. Upon such approval, the revised Final Plat shall be stamped and signed on behalf of the Planning Commission and thereafter recorded as the Final Record Plat.*"

PLANNING COMMISSION HISTORY

The Planning Commission held a public hearing for this item on May 27, 2025. There was one public comment about the connection status of Burnlea Road, and another comment about the approval status of the request. The applicant had withdrawn their request after the item was advertised, so the Commission tabled action on the item, which was withdrawn by the applicant the next day.

MASTER PLAN

The Master Plan for Huntfield was approved by the City on April 12, 2005. It calls for the development of 998 acres with 3,200 dwelling units, split into the following:

A. 1,283 single-family homes
B. 692 townhomes
C. 381 Multi-family units
D. 800 Age-Restricted single family homes
E. 44 Live/Work units

The total area dedicated to residential uses (including streets) was 612.9 acres, and the overall residential density was 2.5 units per acre (calculations for the amounts can be found on the plan set cover sheet).

PROPOSED CHANGES

The applicant proposes the following changes:

Master Plan: Changing to show the existing road alignment per already approved plans.
Phase 2D: Changing single-family homes to townhomes.
Phase 3F: Changing single-family homes to townhomes.
Phase 4: Swapping the location of some townhome and single-family homes.
Phase 5B: Changing to show the existing road alignment per already approved plans.

The purpose of the plan amendment is to reconcile the changes between the 2005 Master Plan and the subsequently approved plan sets, waivers, and construction work, as well as to meet what the applicant cites as market-driven demand for additional townhomes. The changes will

incorporate more rear-loaded townhomes into all phases of site development. The applicant will craft plan sets that follow the pattern of townhomes facing townhomes and single-family units facing other single-family units.



Sheet by Sheet Revision Summary

Sheet #1 Coversheet & Narrative
· Updates to: Owner / Developer, Title Blocks & associated project list

Sheet #2 Status & Typical Road Sections
· Reorganized the sheet layout and added road sections that matched existing conditions.

Sheet #3 Circulation & Open Space
· Reconciled road network and land bay uses to match existing conditions

Sheet #4 Schematic Comparison
· Updated underlying road network & land bays to match existing conditions

Sheet #5 Overall Site Conditions
· Reconciled road network and land bay uses to match existing conditions

Sheet #6 Phasing & Proffer Exhibits
· New Sheet to show the new Phasing limit and Proffer Zone E

CONDITIONS OF ANNEXATION

The most recent set of Conditions of Annexation were approved by City Council on April 19, 2024. The conditions, with staff comments pertaining to this plan change request in red, are here:

l} EDUCATION- Huntfield, proffers to dedicate up to 17 acres of land to Jefferson County Board of Education. The land proposed to be donated to the Jefferson County Board of Education shall be identified via conceptual plan within one (1) year of the effective date of this document. – Identified on plan set

2) TRANSPORTATION- Huntfield, will maintain its commitment to participate with the West Virginia Division of Highways and other developments to pay for Huntfield's pro rata share of required road improvements directly attributable in part to Huntfield. – Not affected by the requested changes

3) HISTORY- Huntfield proffers to provide any historic or archeologic reports and studies, as required by the State Historic Preservation Office, Division of Culture and History. – Not affected by the requested changes

4} SOILS- "Huntfield proffers to identify and remediate any known environmental conditions in any manner, method or process that meets or exceeds West Virginia Department of Environmental Protection (WVDEP) de minimus soils standards and provide the report/documentation to the purchaser indicating proper soil remediation no later than at each home settlement. – Not affected by the requested changes

5} OVERALL PLANNING

a) Huntfield proffers to actively participate with the City and adjacent landowners in the comprehensive planning, preservation, and development of the Old Route 340 corridor between Huntfield's boundaries and Evitt's Run. – Not affected by the requested changes

b) Huntfield proffers to construct a 8' hiker/biker trail in a location in accordance with the Master Plan and within a timeframe in accordance with the mutual agreement of the city and Huntfield.

i) A contiguous sidewalk system from Huntfield to the Augustine Avenue Trail shall be constructed. –The Sept. 2009 approved plan set for Phase 5B does not have a road connection to Augustine Avenue. There is currently no sidewalk along Prospect Hill Blvd. The applicant states that they will provide an exhibit showing sidewalks along homes fronting the Blvd.

c) Huntfield proffers continued participation and coordination with the Eastern Panhandle Transportation Authority (EPTA) to provide bus service between Huntfield and downtown Charles Town, and any other major Charles Town developments. Huntfield shall further present development site plans which incorporate shuttle stops and other appropriate shuttle infrastructure in the Huntfield project. – Not affected by the requested changes

d) Within 12 months of the full execution of this proffer amendment, Huntfield shall collect and distribute community information and future traffic volume projections and relevant data to the City, to incorporate into other/future traffic studies conducted by others.– Not affected by the requested changes

i) Additionally, Huntfield shall cooperate with the City to provide all necessary construction easements or Right of Ways for current and future planned trails, walkways, and pedestrian crossings. – Not affected by the requested changes

e) Lord Fairfax Street shall be developed as an alternative access point pursuant to the Huntfield Overall Composite Schematic plan with City of Charles Town Planning Commission approval date of April 12, 2005 (PREL-20107). – Not affected by the requested changes

6) OTHER CONTRIBUTIONS- To offset its proportionate share of the costs of capital improvements and operating expenses brought about by the development of Huntfield, Huntfield proffers to pay the city the following per unit proffer fees:

a) The City shall collect $2,448 per single family, townhome or attached villa style dwelling unit, or any other style residence approved for permit, to be used for public facilities, infrastructure, and other improvements within the City. This monetary proffered fee shall be separate and exclusive of any County imposed Impact Fee. The City Fee shall be paid at Building Permit application for each dwelling unit. – Not affected by the requested changes

b) Huntfield proffers to dedicate to the City up to 10 (ten) acres of improved (utilities and hard surface road frontage) but vacant land, for the use and benefit of the City for the purpose of constructing, operating, and maintaining municipal facilities. – Not affected by the requested changes

7) CONDITIONS OF DEVELOPMENT OF PHASE I - The foregoing proffers are conditioned upon the following:

a) Current plans being processed in the County will be administered under the NR Zoning Ordinance, and accepted as currently designed, by the City with the following conditions: – Not affected by the requested changes

i) Minimum lot width shall be reduced to 50 feet at the street.
ii) Minimum lot area shall be reduced to 5,000 square feet.
iii) Front yard setback shall be 25 feet from the edge of pavement.
iv) Encroachment within the front yard setback shall be no more than 30%or8.34ft.

v) Side yard setbacks shall be reduced to 5 feet minimum.
vi) No setback from the property line for accessory structures shall be required.
vii) Minimum paving width shall be 24 feet.

b) All plans submitted to the City for development within Huntfield beyond Phase I shall continue to be administered and processed under the NR Zoning Ordinance with the above- listed conditions until such time as the City has created and adopted the new zoning classification pursuant to its Resolution and Annexation Agreement. –All areas not subject to an approved final plan must still go through the planning review process.

8) CONDITIONS OF OVERALL DEVELOPMENT

The City and Huntfield agree to the following performance, design standards, and modifications to the Neighborhood Residential zoning regulations:

The foregoing proffers are further conditioned upon the following:

a) To allow the development of not more than 3,200 homes with the Property, according to "Neo Traditional and New Urbanist Planning Concepts." *(While Neo-Traditional Development often features primarily rear loaded homes, the intent of this agreement* is *to allow front loaded* homes *in designated areas so long as the development, as a whole,* is *in keeping with Neo-Traditional design including, but not limited to, walkability, connectivity, mixed-houses, quality architecture and design, urban design, increased density, and open space.)* Note, this is not an all-inclusive or exhaustive list of the characteristics of neo-traditional style but is used to illustrate the larger development style. All plans for the development of the Property now and in the future may be administered, at the option of Huntfield, under the Neighborhood Residential zoning classification with the following conditions: – The 3,200 cap is not changed by the request.

b) The minimum 200,000 square feet of commercial, retail or office space proffered by Huntfield shall satisfy all requirements for land are devoted to office and/or commercial. This agreement does not preclude Huntfield from developing commercial/retail/office space beyond the 200,000 square feet requirements; - Not affected by the requested changes

c) Huntfield will dedicate 15% of the total land area to open and recreational space. All active and passive recreational facilities provided in Huntfield shall be credited towards the 15% open space requirements specified herein. In addition, Huntfield will provide a minimum SO- foot buffer on either side of Bullskin Run measured from the edge of the stream bank and a landscaped 50-foot buffer along major highways (i.e. US Route 340, 340 Bypass, WV Route 9). – Not affected by the requested changes

d) Maximum Building Heights shall be as follows:

i) Single Family Detached - 45' (forty-five feet), but not more than (3) three stories– Not affected by the requested changes

ii) Townhouse - 45' (forty-five feet), but no more than **4** (four) stories Multi-Family - 55' (fifty-five feet), but not more than 4 (four) stories– Not affected by the requested changes

iii) Office, Commercial, Civic and Mixed Use - 60' (sixty feet), but not more than (5) five stories – Not affected by the requested changes

e) Minimum Lot Widths shall be as follows:

i) Single Family Detached - 50' (fifty-feet), however 45' (forty-five feet) for Active Adult Community (development) – Not affected by the requested changes

ii) Townhouses - Mix of 16' (sixteen feet) to 24' (twenty-four feet); – Not affected by the requested changes

f) Minimum Lot Sizes shall be as follows:

i) Single Family Detached - 5,000 (five thousand square feet), however 4,500 (forty-five hundred square feet) for Active Adult Community (development) – Not affected by the requested changes

ii) Townhouses -1,600 square feet; – Not affected by the requested changes

g) Townhouse portions of development shall be permitted to have an area less than five acres; – Not affected by the requested changes

h) Townhouse units shall be permitted at a maximum density of 16 units per net acre; - The Master Plan changes show where townhomes will be located, without changing the density of the townhome areas. Density impact to be determined at time of phase site plan submittal.

i) Multi-family units, as defined in the City's zoning ordinances, shall be permitted within Huntfield consistent with the City of Charles Town Zoning and Subdivision Ordinance requirements. – Not affected by the requested changes

j) The minimum rear yard setback for units with attached rear-load garages shall be 10' (ten feet); – Not affected by the requested changes

k) Alleys may be dead-end streets when intersection would cause a curb cut on a collector street; -Design impact to be determined at time of phase plan submittal. Not affected by this Master Plan change request.

l) l) Alleys may provide lot access and satisfy road frontage requirements when the lots served by those alleys front on open space; -Design impact to be determined at time of phase plan submittal. Not affected by this Master Plan change request.

m) Cul-de-sac streets shall be permitted in limited instances and require approval by the Planning Commission. When allowed, the cul-de-sac terminus shall include a landscaped circle. -Design impact to be determined at time of phase plan submittal. Not affected by this Master Plan change request.

m) The designated Village Center shall be permitted for Central Business District, General Commercial and Neighborhood Residential uses as defined in the present City of Charles Town Zoning Ordinance. The designed Neighborhood Centers shall be permitted for Office Residential, Neighborhood Residential and Neighborhood Commercial uses as defined in the present City of Charles Town Zoning Ordinance. Future changes in the existing Zoning Ordinances shall be made Applicable to this paragraph. – Not affected by the requested changes

n) In order to allow townhouses to be constructed with both decks and two-car garages, accessory buildings may occupy up to 40% of the rear yard of any townhouse lot. – Not affected by the requested changes

o) The development of gated communities (i.e. restricted access to specific neighborhoods) is not permitted, other than Active Adult Development. – Not affected by the requested changes

p) To enable Huntfield to perform its obligations under the Annexation Agreement, the City shall work cooperatively with Huntfield to ensure that Huntfield may obtain the amount of sewage treatment plant capacity needed to serve the Property at each stage of its development until built out. – The Charles Town Utility Board reviews all plan sets to ensure sufficient capacity

q) In addition to the proffered commitment to approach Pan Tran to provide bus services between Huntfield and downtown Charles Town, Huntfield shall cooperate with any efforts initiated by the City to provide transit services to Huntfield. – Not affected by the requested changes

r) Huntfield will submit a "*Master Schematic Plan*", to City Planning Commission prior to applicable approvals for Phase 4 of the development that incorporate the "*Neo Traditional and new Urbanist Concepts*" and an exhibit illustrating the location, total land area and public accessibility of proposed recreational and open space. Subsequent site plans submitted to support this Master Schematic Plan will provide the detailed design and concepts as they relate to street and block networks; an interconnected pedestrian sidewalk and trail system; landscape screening, buffers and design consideration to mitigate the visual impacts of parking lots; street and parking lot landscaping using the West Virginia Division of Forestry's Recommended Trees for City and Communities publication as the species guide; and design and pedestrian attributes as related to the Village Center, major civic and public use buildings should be located in or adjacent to the village and neighborhood centers or adjacent to the civic green, square or park in the village

center. Public space components and civic buildings should terminate vistas whenever possible. Public and civic use buildings may front on open spaces such as parks and greens. – Proposed changes in this application are made to update to existing builds and approved plans.

s) Garage Configuration:

The areas shaded and/or hatched and noted in Exhibit A as Zone 1, Zone 2, and Zone 3 are subject to specific garage configuration conditions as follows:

i) **Zone 1:** The use of rear entry, alley access parking or rear-loading detached or attached garages for residential garage parking is required. The homes in Zone 1 must provide parking to the rear of the home as indicated in Exhibit A. - Not affected by the requested changes

ii) **Zone 2:** Single family attached or detached residential units with front loading garages or parking (defined as access from street facing front of the home) are permitted without a recessed garage requirement so long as a minimum 25' length minimum driveway is provided extending from back of sidewalk to the front of the garage. Zone 2 includes all land shown/illustrated within Exhibit A. - Not affected by the requested changes

iii) **Zone 3:** Single family attached or detached residential units with front loading garages or parking (defined as access from the street facing front of the home) are permitted without a recessed garage requirement so long as a minimum 25' length minimum driveway is provided extending from back of sidewalk to the front of the garage. Zone 3 includes all the land as noted (and not illustrated) within Exhibit A to include the remaining 481.25 deeded acres to the northwestern side of railroad tracks. - Not affected by the requested changes

v. Community Pool and Associated Facilities: - Not affected by the requested changes

iv) Huntfield proffers the design, permitting, and construction of a community swimming pool, pool club house with bathroom facilities and associated parking lot in similar layout
and conformance with the Huntfield Recreation Center preliminary plans (PP-20125).

(1) Community Pool shall be a minimum of 4,500+ /sf, inclusive of access steps, 3' shallow end and up to 8' deep end, and a 800+ /sf Children's pool.

(2) Single Story Pool clubhouse (min 2,100/sf) with men's and women's restroom, locker room, and changing room facilities.

(3) Parking area consistent with approved preliminary plans.

(4) Pool and associated land and facilities shall be dedicated to HOA upon completion (defined as issuance of Use & Occupancy Permit) and before use

by any residents. HOA shall furnish, supply, operate, and manage facilities from acceptance of facility without financial assistance or contribution from Developer or City.

(5) The Pool, Clubhouse and all associated site work shall be complete, dedicated to the HOA, and able to be used by all residents within two (2) years of the effective date of this signed Proffer Amendment.

(6) All basketball courts, recreational equipment and green space shall be built out consistent with the Huntfield Recreation Center preliminary plans (PP-20125). The construction of the basketball courts and recreational equipment shall commence no later than the time the pool dedication occurs to the HOA and completed and ready for usage within one (1) year.

9) ZONING YIELD

a) Approved under the zoning shall be 3,200 residential units of single family detached, single family attached, multi-family, and 200,000 to 1,000,000 square feet commercial, retail, and office development. If desired, Huntfield may produce a market study identifying the potential to increase the total square footage of commercial, retail and office space beyond the required minimum of 200,000 square feet. In order to achieve the desired maximum commercial development of 1,000,000 square feet, the City acknowledges that Floor Area Ratios (FAR's) of greater than 1 or building heights of 75 feet may be considered by the City of Charles Town. – Total unit count not changing; unit type and amount of each type is changing.

b) Phasing of development or building permits - No phasing of development or building permits will be imposed with the exception of Article 10.a as outlined herein. (Subject to availability of adequate infrastructure facilities). - Not affected by the requested changes

10) SEQUENCE OF DEVELOPMENT

a) All lots in Zone 1 as defined herein, shall have homes/residences constructed and fully built out prior to any residential construction is permitted to commence in Zone 3 (as defined herein). All land within Zone 2 is specifically excluded from this restriction. - Not affected by the requested changes

SUBDIVISION/LAND DEVELOPMENT ORDINANCE CRITERIA

The Master Plan represents a vision of how the community shall be developed; it does not layout in fine detail items such as lot line metes and bounds, street tree placement, utility lines, etc. The proposed plan changes do not provide all the technical data required of a standard final site plan (survey marker locations, easement and right-of-way limits, utility line locations, etc…) Those items are not necessary for this plan, which is a development concept plan. They are necessary for the development of each phase site plan.

PROPOSED CHANGES BY PHASE

The following changes are requested:

Development Phase and date of Plan Approval	Original style of development	Proposed change:
Master Plan, April 2005	Guide to development of Huntfield	Remove re-alignment of Prospect Hill Blvd to match road built during Phase 1, approved July 2002
Phase 2D. No plan set approved.	Single-family homes	Change lots from single-family to townhomes. Approx. 41 lots affected.
Phase 3F. No plan set approved.	Single-family homes	Change lots from single-family to townhomes. Approx. 33 lots affected.
Phase 4. No plan set approved.	Mix of single-family and townhome units	Changing some units from single-family to townhomes and vice-versa. Unit count not specified.
Phase 5B. September, 2009.	Single-family homes	Adjusting the Master Plan to reflect the previously approved plan sets

The only phase with a plan set already approved is 5B, approved in 2009. The Master Plan itself was approved in 2005. The proposed changes to phases 2D, 3F, and 4 will be detailed when the site plans for those phases are submitted.

IMPACT ON EXISITNG DEVLEOPMENT

All proposed unit changes (whether from towns to singles or singles to towns) will not occur in any existing blocks. These unit changes are proposed for areas that do not yet have approved plans. The applicant has relabeled the affected phases as:

Previous Phase ID	New Phase ID
2D	9
3F	Split between 6 & 7
4	11
5B	Split between 5B-1 and 5B-2

The phases can be seen in the map on the following page:

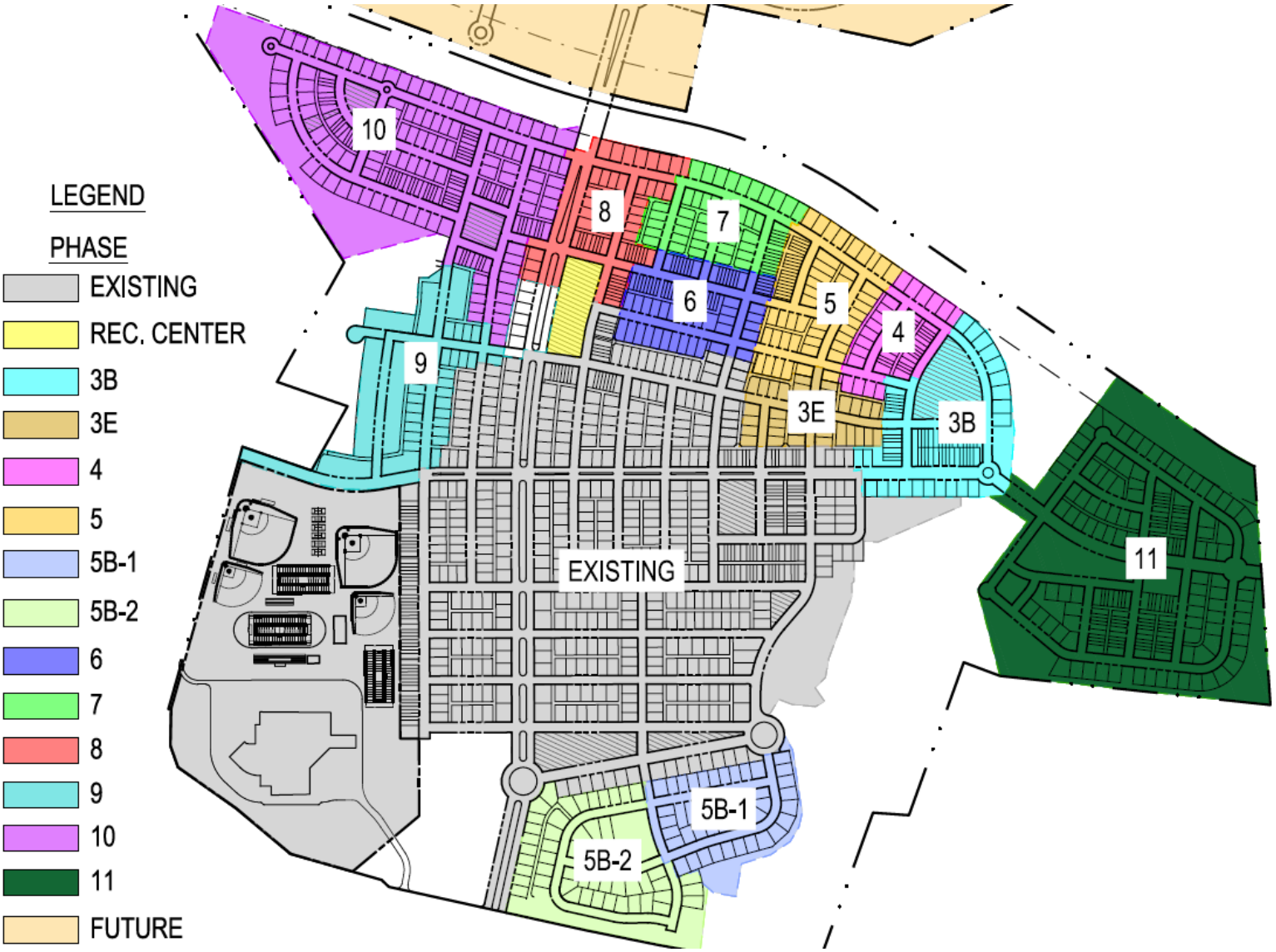

The homes most impacted by the potential change are those single-family homes along Colonial Drive, north-west of Lord Fairfax St. The phase behind and to the northwest of those units (Phase 2D/above labelled as 9) is shown as single-family homes on the current Master Plan but is proposed to be changed to townhomes. The other phases being developed (Phase 3F/above labelled as 6 & 7, and Phase 4/above labelled as 11) are separated from existing development by new construction/other planned phases of development.

The proposed changes will shift density from the northern side of the railroad tracks to the southern side of the railroad tracks by adding more townhomes into areas previously master planned for single family homes. The relocation of townhomes to a more central location is in keeping with the neo-urbanist style of development (high-density walkable blocks.) Each site plan is reviewed by the Charles Town Utility Board to ensure they can provide adequate service.

CONCLUSION

The applicant is requesting to modify the 2005 Master Plan to allow for more townhomes in a variety of areas; swapping the location of some single-family and townhomes in Phase 4; and modifying the location of Prospect Hill Blvd (Phase 1) and Burnlea Road (Phase 5B) to match previously approved site plans for those phases.

RECOMMENDATION

Approval subject to conditions:

1. Update the approval date on the Cover Sheet for the conditions of annexation to reference the latest approved Conditions, and to include all Conditions on another sheet within the plan set.

MAJOR SUBDIVISION AND LAND DEVELOPMENT APPLICATION

The submission of this form, along with the prescribed information and required fees, shall serve as the Applicant's Major S/LD Application as required by Ordinance Section 1332.03.

1. SUBMISSION DATE 11/19/2025

2. APPLICATION TYPE
- ☐ Sketch Plan
- ☐ Preliminary Plan
- ☑ Final Plan

3. FEES

See next page. Fee is comprised of base fee, additional fees, and legal notice fees.

Sketch and Preliminary Plans each require Class I legal notices, first class mail, and public hearing signs. Final plans are reviewed administratively.

4. SUBMITTAL PACKAGE

Please submit a paper application and one paper plan set with at least dimensions of 24" x 36", as well as a plan set in PDF format.

Fee Schedule

1. BASE FEES

- **Sketch/Preliminary** Plan Review - $300 application fee.

- **Final Plan/ Record Plat** Review Fees: $200 application fee

2. APPLICATION FEES

(1) Single principal structure on a single site - $200 filing fee
(2) < 3 Residential Buildings - $200 filing fee
(3) 3 or more Residential Buildings - $500 filing fee plus $50 per building, minimum of $2000 escrow.
(4) Manufactured (Mobile) Home Park - $500 filing fee plus $50 per dwelling unit, minimum of $2000 escrow.
(5) Commercial and Industrial Buildings - $700 filing fee plus $2000 escrow.
(6) Subdivision only – $200 filing fee

Building Addition:
(1.) Less than 2,5000 sq.ft AND less than 50% increase in impervious area - $200
(2.) More than 2,5000 sq.ft OR more than 50% increase in impervious area - $300

3. LEGAL NOTICE FEES

(1). Newspaper public notice:
A. Class I/I-0 Legal Advertisement- - $25 flat fee
B. Class II/II-0 Legal Advertisement - $50 flat fee
C. Class III/III-0 Legal Advertisement - $75 flat fee

(2). Mailed notice:
A. First class mail - $25 flat fee
B. Certified mail - $75 flat fee

(3). Signage:
A. Public notice signage - $10 flat fee

4. ADDITIONAL FEES

These fees may differ between applications depending on the level of analysis required.

- Legal review fees for zoning and site plan reviews will be will be actual costs incurred based on the -legal review.

- Water and Sewer review fees for zoning and site plan reviews will actual costs incurred based on the review.

- Third-party review fees for zoning and site plan reviews will be actual costs incurred based on the review.

3. APPLICANT'S NAME* DR Acquisitions, LLC

Address: 10313 Arnett Dr, Ste 101, Hagerstown, MD 21740

Telephone Number (240) 420-6046

Email Address [redacted]

4. PROPERTY OWNER'S NAME DR Acquisitions, LLC

Address: 10313 Arnett Dr, Ste 101, Hagerstown, MD 21740

Telephone Number (240) 420-6046

Email Address [redacted]

5. LEGAL DESCRIPTION OF THE SUBJECT PROPERTY (list all parcels that apply)

Property Address: _____

Tax Map # and Parcel: 03 11000100000000

Property Area in Square Feet or Acres: 284.98 Remaining Acres

*Applicants include: Property owner(s), Engineer(s), Surveyor(s), or Consultant(s)

6. FEE CALCULATION (Per Fee Schedule)

BASE: _____

APPLICATION: _____

_____

_____

_____

The City will send out invoices for 3rd party review.

LEGAL (**For sketch and preliminary only**)

MAILING TYPE: $25

LEGAL AD $25

SIGNAGE: $10

AMOUNT DUE: $_____

7. DESCRIPTION OF PROJECT AND PROPOSED USE(S) OF THE PROPERTY:

PUD - Schematic Plan Amendment. Reconciling Master Development Plan with approved site plans, record plats, and construction plans from the past 20 years.

8. DESCRIPTION OF THE EXISTING (OR FORMER) USE(S) OF THE PROPERTY AND CURRENT ZONING:

PUD

9. ARE THERE ANY ANTICIPATED WAIVERS OR VARIANCES? IF YES, PROVIDE DETAILS:

No

10. PARCEL HISTORY (List all pending or previously approved applications on the subject parcels inventoried above, including previous site plan applications if this application is a site plan amendment)

Application No.	Project Name and Phase	Status	Approval Date
Huntfield Overall Composite Schematic		Previously Approved	Nov. 2004

11. HAS THE PROPERTY BEEN THE SUBJECT OF ANY COURT ACTION?

☑ No

☐ Yes (Please specify nature of all proceedings and current status)

_____

_____

_____

12. PLAN/PLAT SUBMISSION TO OTHER AGENCIES (Documentation of all required approvals must be attached to this Application or submitted prior to Preliminary S/LD Application approval)

Agency (Specify others as applicable)	Submittal Date	Permit ID/#	Date of Approval/Issuance
City of Charles Town Utility Board			
Jefferson County Addressing Office			
Jefferson County Board of Education			
WV Department of Environmental Protection			
WV Department of Transportation, Division of Highways			
WV State Historic Preservation Office			
WV Office of Environmental Health Services			
U.S. Army Corps of Engineers			
Other (specify each Agency)			

APPLICANT CERTIFICATION

I certify that, to the best of my knowledge, the submitted information and statements are true and correct. I also certify that I have received and read Section 1332.03 of the Charles Town S/LD Ordinance and relevant provisions of the Charles Town City Code.

Signature of Applicant _____ Date 11/19/2025

Signature of Property Owner (If different than Applicant)

_____ Date _____

Please submit an original completed Application and specified number of Site Plan copies to the following:

At City Hall:	Or	Via Mail:
Subdivision Administrator City of Charles Town 101 E. Washington Street Charles Town, WV 25414		Subdivision Administrator City of Charles Town PO BOX 14 Charles Town, WV 25414

FOR CITY USE ONLY

Application Number:_____ Date Application Received:_____

Fee: $_____ Paid:$_____ Check No._____

Receipt No._____

Subdivision Administrator Approval/Denial:_____ Date:_____

Planning Commission Approval/Denial:_____ Date:_____

Comments/Conditions:_____

_____

_____

_____

SCHEMATIC PLAN
HUNTFIELD - OVERALL COMPOSITE SCHEMATIC
TAX MAP 11, PARCEL 1 & PARCEL 2
HUNTFIELD, L.C. - DEED BOOK 949 PAGE 203
CHARLES TOWN CORPORATION
JEFFERSON COUNTY, WV

OWNER / DEVELOPER

HUNTFIELD, L.C.
8614 WESTWOOD CENTER DRIVE, SUITE 900
VIENNA, VIRGINIA 22182
703-442-8992

VICINITY MAP

SCALE : 1"= 2000'

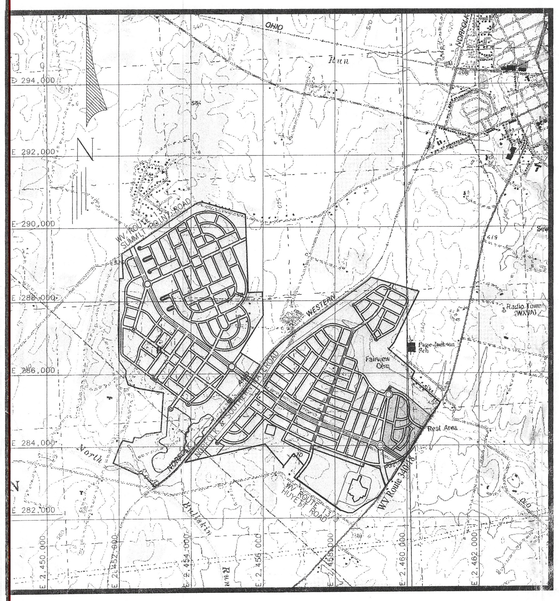

SBRD 2004-0003	Huntfield Phase 3A Section 1 Record Plat	Approved	5/24/2004
SBRD 2004-0003	Huntfield Phase 3A Section 2 Record Plat	Approved	6/28/2004
STPL 2004-0006	Huntfield Phase 3B (Site Plan)	In Review	
STPL 2004-0007	Huntfield Phase 3C (Site Plan)	In Review	

SCHEMATIC PLAN REQUIREMENTS AND SUBMISSION

The following table compares submission requirements of the zoning ordinance for Neighborhood Residential schematic plans (@Article 8A c) 1.b.) and items submitted as the Huntfield Overall Composite Schematic.

Table 1

Items Required in the Zoning Ordinance	*HUNTFIELD Item Submitted*
Indicate the existing parcel	*base map with property lines, parcels, sizes*
Natural existing features, contours @ 10' intervals	*topography and natural feature map*
Surrounding uses	*map of surrounding uses and existing streets*
Proposed general land use	*proposed general land use map*
Circulation patterns	*existing permitted/constructed entrances, circulation, open space distribution overlay map*

LAND AREA

The total area of the Huntfield, Overall Composite Schematic within the City is 998.8 acres. This area includes the previously approved Huntfield Composite Schematic I, which contained 313.3 acres.

The existing parcels making up this land are south of the Norfolk and Southern Railroad)

Total north of Norfolk and Southern Railroad = *481.252* Acres
Total south of Norfolk and Southern Railroad = *517.590* Acres
998.842 Acres

SURROUNDING LAND USE AND EXISTING STREETS

Surrounding Land Use

Surrounding land use to the North and across West Virginia Route 13 includes the Locust Hills and Tuscawilla Hills single family subdivision and the Locust Hills Golf Course. North of the railroad to the west is property owned by the Claymont Society for Continuous Education, which contains the Claymont Museum

Existing Streets

Existing streets include Summit Point Road (WV Rt.13), Route *340/18* (Augustine Avenue), and Route *13/1* (Huyett Road). Currently under construction and or built are: Prospect Boulevard, Burnlea Road. Colston Road, Butler Street, Braddock Street, Calmes Street, Bullskin Street, Colonial Drive, Davis Street, and Payne Street. A small portion of Battlefield Drive, Chadwick Drive, Silver Leaf Drive, and Holly Springs Drive are currently under construction and or have been built. All the aforementioned streets were previously approved with the Huntfield Phase 1, Phase 2A, Phase 2B, and Phase 3A construction plans.

NATURAL FEATURES

The property is and has been farmland so there is very little wooded or forested area and none of any quality. The property was farmed as recently as the fall of 2001.

The property has no real prominent features. The site is relatively flat and open through the middle of the property with a wooded area to the west. It has areas of woods, areas of dense thick brush and some high open areas.

The North Fork of the Bullskin Run crosses the property on the southwest and the drain of an unnamed wet weather stream crosses the east of the property.

A portion of the property is located in the FEMA Flood Plain Zone 'A' per FIRM "#540065 0050 C" dated August 2, 1993. However, this portion of the property is not to be developed.

ZONING REQUIREMENTS

Zoning requirements for Neighborhood Residential (@ Article 8A b) 1., 3.-5.) and the general approach to these requirements in the Huntfield Schematic Plan are presented in the following table.

Table 2 (Note: Acreages shown are approximate. Actual areas to be determined at the time of recordation of the record plat pertaining to each Phase of the development. All areas shall be in general conformance with the Overall Composite Schematic.)

Items Required in the Zoning Ordinance	*HUNTFIELD – Overall Composite Schematic Item Submitted*
Parcels 5 acres or larger	*998.8 Acres*
Mix of uses	*Mixed-Use Development*
Compatible with surrounding uses	*Compatible with existing subdivisions*
50% of total area to be residential	*Required: 499.4 Acres* *Provided: 612.9 Acres includes ROW* ** An additional 74.1 acres not counted towards the Residential Area Requirements has been provided for school facilities* **An additional 12.9 acres not counted towards the Residential Area has been provided in Municipal Use Parcels* **An additional 14.7 acres not counted towards the Residential Area has been provided by parcels designated as Active Community Centers*
15% of area (less streets, sidewalks & drainage) in open space	*Required: 149.8 Acres* *Provided: 228.2 Acres includes open space medians* **An additional 38.5 acres of open space not counted towards the open space requirements is provided within the School Site*
Not less than 10% in office/retail * Includes 44 Live/Work Units	*Required: 99.9 Acres* *Provided: 26.1 Acres* **See "Commercial" Section of this document*
Residential Lots Provided	*1,203 Single Family* *692 Townhomes* *381 Multi-Family* *800 Age-Restricted SFD Lots (Washington Homes)* *44 Live/Work (Counted as Commercial Area)* *3,200 Total Dwelling Units*

Items Required in the Zoning Ordinance	*HUNTFIELD – Overall Composite Schematic Item Submitted*
Number of lots: land area in sq. ft. / 10,000 *Note: For Townhome developments, each five (5) acres developed as townhouses constitutes 1 lot	*Required: 4,351 Lots Maximum* *Provided: 2,523 Lots* *Townhome Acreage = 74.6 acres* *Equivalent # Townhome Lots = 74.6 acres/5 = 15 Lots* *Total # Lots = (3,200 Units – 692 Townhomes) + 15 Equivalent # Townhome Lots = 2,523 Lots* *Number of Lots: 43,507,728 sq. ft. / 10,000 = 4,351 Lots*
Overall Maximum Residential Density *Note: For Townhome developments, each five (5) acres developed as townhouses constitutes 1 lot	*Required: Not to exceed 10 Units / Acre* *Provided: 2.5 Units/Acres* *Townhome Acreage = 74.6 acres* *Equivalent # Townhome Lots = 74.6 acres/5 = 15 Lots* *Total # Lots = (3,200 Units – 692 Townhomes) + 15 Equivalent # Townhome Lots = 2,523 Lots* *Overall density: 2,523 Lots / 998.8 Acres = 2.5 Units/Acres*
Maximum Density - Multi-Family	*Required:* not exceed 20 units per acre *Provided: 13.8 units/acre* *381 Units / 27.6 Acres =13.8 units/acre*
Maximum Density - Townhomes	*Required:* not exceed 10 units per acre *(modified per Huntfield proffers to 16 units/acre)* *Provided: 9.3 units/acre* *692 Townhomes / 74.5 Total Acres Including ROW = 9.3 Units/Acre*

The following is a partial listing of the conditions of the overall development per the "Letter of Clarification/Huntfield Proffer Statement" dated March 28, 2002. See the aforementioned "Letter of Clarification/Huntfield Proffer Statement" for a full listing of the proffers.

- Minimum lot width shall be reduced to 50 feet at the street.
- Minimum lot area shall be reduced to 5,000 square feet.
- Front yard setback shall be 25 feet from the edge of pavement.
- Encroachment within the front yard setback shall be no more than 30% or 8.34 feet. It appears that the percentage should be 33.3%.
- Side yard setbacks shall be reduced to 5 feet minimum.
- No setback from the property line for accessory structures shall be required.
- Minimum paving width shall be 24 feet.

The following is a partial listing of the, "Amended Huntfield Proffers" dated May 3, 2004. See the aforementioned "Amended Huntfield Proffers" for a full listing of the proffers.

- The minimum 200,000 square feet of commercial retail or office space proffered by Huntfield shall satisfy all requirements for land area devoted to office and/or commercial. This agreement does not preclude Huntfield from developing commercial/retail/office beyond the 200,000 square feet requirement.
- Huntfield will dedicate 15% of the total land are to open and recreational space. All active and passive recreational facilities provided in Huntfield shall be credited toward the 15% open space requirement specified herein. In addition, Huntfield will provide a minimum 50-foot buffer on either side of Bullskin Run measured from the edge of the stream bank and a landscaped 50-foot buffer along major highways (i.e. Route 340, 340 Bypass, WV Route 9).
- Maximum building heights shall be as follows:
  - Single Family Detached – 45', but not more than 3 stories
  - Townhouses – 45', but not more than 3 stories
  - Multi-Family – 50', but not more than 4 stories
  - Office, Commercial, Civic and Mixed Use – 60' but not more than 5 stories
- Minimum lot widths shall be as follows:
  - Single Family Detached – 50', however 45' for Active Adult Community (development)
  - Townhouses – Mix of 16' to 24'
- Minimum lot sizes shall be as follows:
  - Single Family Detached – 5,000 square feet, however 4,500 square feet for Active Adult Community (development)
  - Townhouses – 1,600 square feet
- Townhouse portions of the development shall be permitted to have an area less than five acres
- Townhouse units shall be permitted at a maximum density of 16 units per acres
- The minimum rear yard setback for units with attached rear-load garages shall be 10'
- Alleys may be dead-end streets when intersections would cause a curb cut on a collector street
- Alleys may provide lot access and satisfy road frontage requirements when the lots served by those alleys front on open space
- Cul-de-sac streets shall be permitted in limited instances and require approval by the Planning Commission. When allowed, the cul-de-sacs terminus shall include a landscaped circle.
- The designated Village Center shall be permitted for Central Business District, General Commercial and Neighborhood Residential uses as defined in the present City of Charles Town Zoning Ordinance. The designated Neighborhood Centers shall be permitted for Office Residential, Neighborhood Residential and Neighborhood Commercial uses as defined in the present City of Charles Town Zoning Ordinance. Future changes in the existing Zoning Ordinances shall be made applicable to this paragraph.

Table 3 (Note: Acreages shown are approximate. Actual areas to be determined at the time of recordation of the record plat pertaining to each Phase of the development. All areas shall be in general conformance with the Overall Composite Schematic.)

Use	Required	Provided
Site Area	Min. 5 Acres	998.8 Total Acres
Existing		
Composite Schematic I		313.3 Acres
Proposed:		
Residential (includes rights of way)	499.4 Acres	612.9 Acres
Dedicated School Parcels		74.1 Acres
Municipal Use Parcels		12.9 Acres
Active Community Centers		14.7 Acres
Open Space (Includes open space medians)	149.8 Acres	228.2 Acres
Additional Open Space Provided in School Site		38.5 Acres
Commercial (Includes 44 Live/Work Units)	99.9 Acres	26.1 Acres
*See "Commercial" Section of this document		

STATEMENT OF ACCEPTANCE

THE OWNER/DEVELOPER, IN SIGNING THIS PLAT, AGREES TO ABIDE BY ALL CONDITIONS, TERMS, AND SPECIFICATIONS PROVIDED HEREON.

LINDA ERBS V.P. OF PLANNING AND ZONING
8614 WESTWOOD CENTER DRIVE SUITE 900
VIENNA, VA 22182
703-442-8992

INTRODUCTION

This description and the accompanying illustrative graphics are a part of the Huntfield Overall Composite Schematic for the Neighborhood Residential zoning of Huntfield. This schematic encompasses all existing and future phases of Huntfield North and South of the Norfolk & Southern Railroad. The Overall Composite Schematic includes the previously approved Huntfield Composite Schematic I, which included and superseded the following previously approved schematics: Huntfield Phase 1 Schematic, Huntfield Phase 1&2A Schematic, Huntfield Phase 2B Schematic. The Huntfield Overall Composite Schematic supersedes all previously approved schematics, and all development shall be in conformance with it.

Assuming development proceeds in an orderly fashion, a phasing plan will be submitted to the City of Charles Town within twelve (12) months of the approval date of the Huntfield Overall Composite Schematic. In the event that the development is delayed, an alternate time frame for submittal of the phasing plan will be agreed upon by the City and the Applicant. The phasing plan will be provided for the information of the City and will include information pertaining to construction of community centers and recreational areas to ensure adequate amenities are provided in conjunction with residential areas. Per the Huntfield Proffers, "Huntfield has agreed to approach Pan Tran to provide shuttle service between the Property and downtown Charles Town." Information pertaining to approach of Huntfield to Pan-Tran and potential train commuter service shall also be included in the phasing plan. See the "Traffic Circulation and Analysis" section of this document for additional information to be provided in the phasing plan.

The items included in this Description are organized under the headings of:

- Parcel History
- Schematic Plan Requirements and Submission
- Land Area
- Surrounding Land Use and Existing Streets
- Natural Features
- Zoning Requirements
- Generalized Land Use
- Traffic Circulation & Analysis

PARCEL HISTORY

List all pending or previously approved applications on the subject parcel(s), including previous schematic plan applications if this application is a schematic plan amendment

Application #	Project Name & Phase	Status	Approval Date
	Huntfield Phase 1 Schematic	Approved	2/11/2002
STPL 2002-0001	Huntfield Phase I (Site Plan)	Approved	6/24/2002
SBRD 2002-0001	Huntfield Phase 1 Record Plat	Approved	7/29/2002
RPOC 2003-0001	Huntfield Phase 1 Record Plat Correction	Approved	Recorded 9/9/2003
	Huntfield Revised Phase 1 & 2A Schematic	Approved	10/22/2002
SPAM 2003-0001	Huntfield Phase I Revised (Site Plan Amendment)		5/28/2003
SBRD 2003-0001/ RPAM 2003-0001	Huntfield Phase 1 Revised Record Plat Amendment	Approved	6/16/2003
SPAM 2003-0002	Huntfield Phase I Block I Revised (Site Plan Amendment)	Approved	10/27/2003
RPAM 2003-0002	Huntfield Phase 1 Block 1 Record Plat Amendment	Approved	1/12/2004
STPL 2003-0001	Huntfield Phase 2A (Site Plan)	Approved	5/28/2003
SBRD 2003-0002	Huntfield Phase 2A Record Plat	Approved	3/30/2004
SCHM 2003-0001	Huntfield Phase 2B Schematic	Approved	2/24/2003
STPL 2003-0006	Huntfield Phase 2B (Site Plan)	Approved	8/5/2004
SBRD 2004-0002	Huntfield Phase 2B Section 1A Record Plat	Approved	5/24/2004
SBRD 2004-0002	Huntfield Phase 2B Section 1B Record Plat	Approved	10/25/04
SCHM 2003-0003	Huntfield Composite Schematic I	Approved	5/28/2003
STPL 2003-0009	Huntfield Phase 3A (Site Plan)	Approved	5/24/2004

GENERALIZED LAND USE

Proposed generalized land use in this Schematic Plan submission is as follows:

Table 4 (Note: Acreages shown are approximate. Actual areas to be determined at the time of recordation of the record plat pertaining to each Phase of the development. All areas shall be in general conformance with the Overall Composite Schematic.)

Use	Required	Provided
Site Area	Min. 5 Acres	998.8 Total Acres
Existing		
Composite Schematic I		313.3 Acres
Proposed:		
Residential (includes rights of way)	499.4 Acres	612.9 Acres
Dedicated School Parcels		74.1 Acres
Municipal Use Parcels		12.9 Acres
Active Community Centers		14.7 Acres
Open Space (Includes open space medians)	149.8 Acres	228.2 Acres
Additional Open Space Provided in School Site		38.5 Acres
Commercial (Includes 44 Live/Work Units) *See "Commercial" Section of this document	99.9 Acres	26.1 Acres

Residential Area

This area consists of approximately 612.9 acres, and is projected to be developed with single family detached houses, town homes, and multi-family dwellings. It will also include an Active Adult Community as defined by the Active Adult Community Covenants. Lots sizes will vary throughout the development; however, all lots sizes will be in accordance with the proffers for the Huntfield development. All residential areas meet the density requirements set forth in the Zoning Ordinance except where modified by the Huntfield proffers. An additional 74.1 acres not counted towards the residential requirements has been provided for school facilities, and an additional 12.9 acres have been provided as Municipal Use Parcels. Municipal Use Parcel #1 contains approximately 5.4 acres and is a proposed location for a public administration building and potential train and/or Pan-Tran bus stations. Municipal Use Parcel #4, which contains approximately 3.0 acres, is also a potential location for train and/or Pan-Tran bus stations. Municipal Use Parcel #2 (1.5 acres) contains the water tower, and Municipal Use Parcel #3 (3.0 acres) is proposed as a ball field. Determination of final use of Municipal Parcels will be determined with future site plans. Additional areas also not included in the residential area requirements have been provided in parcels dedicated to Active Community Centers. Active Community Center #1 provides 5.5 acres, #2 provides 6.2 acres, and #3 provides 6.9 acres for a total of 14.7 acres of additional area provided by Active Community Centers. The final use and design of each Active Community Center will be determined at the site plan stage; however, they shall contain, but are not limited to the following: swimming pools, meeting facilities, and recreational facilities. These recreational amenities will be sized appropriately with adequate parking and ancillary support facilities, such as bathrooms, etc.

Commercial

The commercial areas shown have been revised from those shown on previous schematic plans in order to provide more viable commercial locations. The commercial area requirements have been modified based on neo-traditional design concepts. As specified in the Huntfield proffers, "a minimum 200,000 square feet of commercial, retail, or office space proffered by Huntfield shall satisfy all requirements for land area devoted to office and/or commercial. This agreement does not preclude Huntfield from developing commercial/retail/office space beyond the 200,000 square feet requirement."

Commercial areas include a Village Center and multiple Neighborhood Centers providing 26.1 acres of commercial area. Per the Huntfield proffers, "The designated Village Center shall be permitted for Central Business District, General Commercial and Neighborhood Residential uses as defined in the present City of Charles Town Zoning Ordinance. The designated Neighborhood Centers shall be permitted for Office Residential, Neighborhood Residential and Neighborhood Commercial uses as defined in the present City of Charles Town Zoning Ordinance. Future changes in the existing Zoning Ordinances shall be made applicable to this paragraph." In addition, 44 live/work units provided in the commercial areas.

Open Space

Huntfield Overall Composite Schematic allocates approximately 228.2 acres of open space, which exceeds the Zoning Ordinance standard for open space requirements. This consists of dedicated open space parcels totaling approximately 217.9 acres with the remaining area located within the right of way. Not counted toward the open space requirements are 38.5 acres of open space located within in the School Site.

The dedicated parcels will contain an active use park, a public green, and multiple passive parks. The passive parks may contain, but are not limited to: picnic areas, playing fields, and grass areas. Final determination of passive parks use will be determined with future site plans. One tot-lot is currently constructed on the eastern side of the project. At a minimum, one additional tot-lot shall be provided on the western site. This tot-lot shall be located south of Future Prospect Hill Boulevard within close proximity to the town home regions.

A biker/biker trail will be provided within open space parcels and other areas with the development. The trail will be coordinated with trails located on adjoining parcels and may incorporate the use of sidewalks and roadways throughout the development as a part of the trail system.

The open space, to be located and designed during the site planning stage, would seek to achieve the following objectives:

- Provide the zoning ordinance-required open space.
- Provide some open space area easily accessible to all parts of Huntfield.
- Provide at least one area large enough for residents of different neighborhoods to gather together.
- Provide internal buffers between non-residential and residential uses.
- Incorporate passive and active component in Neighborhood open space areas.
- As new lots are added additional neighborhood park sites will be developed.

NOTES:
1) SEE SHEET 2 FOR TRAFFIC CIRCULATION & ANALYSIS
2) FOR LISTING OF AFFECTED PARCELS PLEASE SEE SHEET 4

SHEET INDEX

1. COVER SHEET & NARRATIVE
2. STATUS & TYPICAL ROAD SECTIONS
3. CIRCULATION & OPEN SPACE
4. SCHEMATIC COMPARISON
5. OVERALL SITE CONDITIONS

Approved:

Scott Coyle 4-12-2005

Planning Commission Date

SCHM 2004-0002

No.	DATE	REVISIONS
	02-10-05	ADDRESSED COMMENTS RECEIVED AT JANUARY PLANNING COMMISSION MEETING
	01-04-05	ADDRESSED VERBAL COMMENTS RECEIVED FROM CITY
	12-17-04	ADDRESSED SECOND SET OF CITY COMMENTS
	12-13-04	ADDRESSED CITY COMMENTS

PLAN DATE: 11-29-04; 12-13-04; 01-04-05; 12-17-04; 02-10-05

Urban Engineering & Associates, Inc.
CIVIL ENGINEERS • LANDSCAPE ARCHITECTS • LAND SURVEYORS
PEGASUS BUSINESS CENTER
600 PEGASUS COURT, SUITE 101 WINCHESTER, VIRGINIA 22602
PHONE (540) 450-0211 FAX (540) 450-0210

COMMONWEALTH OF VIRGINIA — LICENSED — CLARK STEVEN SCHWARTZ — #0510 — STATE OF — REGISTERED — LAND SURVEYOR — PROFESSIONAL

Cover Sheet & Narrative

HUNTFIELD
OVERALL COMPOSITE SCHEMATIC
CHARLES TOWN CORPORATION
JEFFERSON COUNTY, WEST VIRGINIA

SCALE: AS SHOWN C.I. N/A DATE: NOVEMBER 2004

SHEET 1 OF 5

PREL-20107

TYPICAL SECTION
RAILROAD BERM

NOTE: BERM SECTION SHOWN IS APPROXIMATE. ACTUAL BERM DESIGN AND LOCATION TO BE DETERMINED WITH FUTURE SITE PLANS.

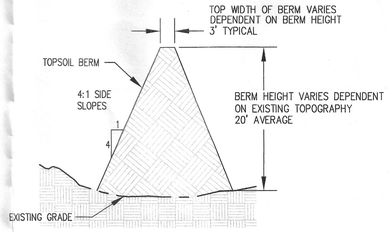

TYPICAL SECTION
TERTIARY STREETS - ACTIVE ADULT COMMUNITY

FOR ILLUSTRATIVE PURPOSES ONLY

FINAL SECTION DETAILS TO BE APPROVED DURING SITE PLAN REVIEW

NOTE: APPLICABLE TO TERTIARY STREETS LOCATED WITHIN THE ACTIVE ADULT COMMUNITY. SEE DETAIL "TERTIARY STREETS - STANDARD DETAIL" FOR DETAIL OF TERTIARY STREETS LOCATED OUTSIDE OF ACTIVE ADULT COMMUNITY.

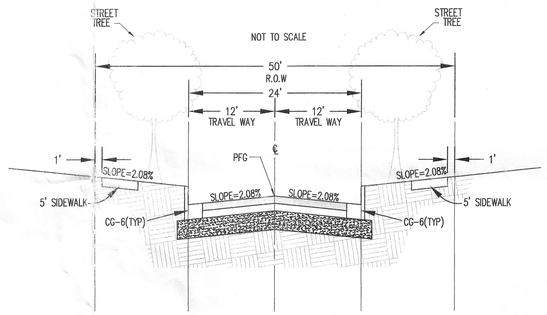

TYPICAL SECTION
TERTIARY STREETS (STANDARD DETAIL)

FOR ILLUSTRATIVE PURPOSES ONLY

FINAL SECTION DETAILS TO BE APPROVED DURING SITE PLAN REVIEW

NOTE: APPLICABLE TO TERTIARY STREETS LOCATED OUTSIDE OF ACTIVE ADULT COMMUNITY. SEE DETAIL "TERTIARY STREETS - ACTIVE ADULT COMMUNITY" FOR DETAIL OF TERTIARY STREETS LOCATED WITHIN THE ACTIVE ADULT COMMUNITY.

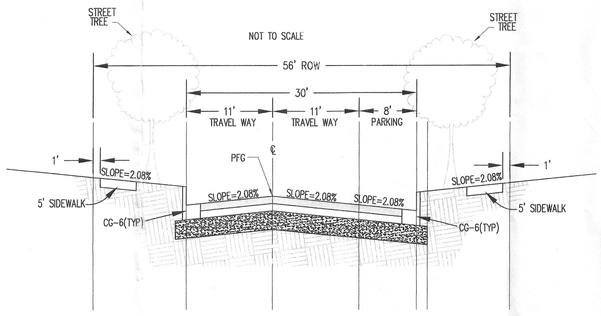

TRAFFIC CIRCULATION & ANALYSIS

The traffic circulation system has been designed to accomplish the following objectives:

- Achieve high levels of service by dispersing and balancing site generated traffic among available roads.
- Provide for connections with existing and future neighboring subdivisions & properties when applicable.
- Provide a planned hierarchy of roads including main and secondary roads.
- Respect the existing topography and landform in designing roads to avoid unnecessary or disruptive changes to the landscape.
- Provide good access to all roads adjoining the site but avoid a direct cut through or alternative to the existing interchange between WV Route 13 and Route 13/3.
- Provide pedestrian ways with subdivision and site plans which connect the complementary land uses and sub-neighborhoods within Huntfield, and which will include sidewalks next to streets with emphasis on pedestrian elements at the secondary road level rather than on the busier roads.
- Provide traffic calming at the internal intersection to help with pedestrian safety.

Roads within the Western Site have been aligned to provide views of historic Claymont (Claymont-Blakeley Axis) and the Charles Town Court House (Washington Street Axis).

A Phased Traffic Impact Analysis for Huntfield was prepared on May 5, 2004 by Patton Harris Rust & Associates. The analysis includes both site related and non-site related recommended transportation improvements. The Analysis is currently in review by the West Virginia Department of Highways. Per the recommendations made in the Traffic Analysis, the existing Prospect Hill Boulevard entrance will be abandoned and a "Re-aligned Prospect Hill Boulevard" will be constructed. Final determination of the exact location of Re-aligned Prospect Hill Boulevard and the associated intersections to be determined based upon coordination with the High School and the Department of Highways.

Per the Huntfield proffers, "Huntfield has proffered to produce a transportation study and plan which indicates how the development of road improvements, a hike/biker trail, shuttle routes, a potential commuter train/bus station, and other transportation improvement could minimize the impacts of additional vehicle traffic, attributable to the Huntfield project, in the Charles Town Area". A phasing plan will be submitted to the City of Charles Town with future site plans for informative purposes. The phasing plan will include trigger points at which action regarding the transportation plan will be taken.

PLAN STATUS

DATE	DESCRIPTION
11-29-04	FIRST SUBMISSION
12-14-04	SECOND SUBMISSION – ADDRESSED CITY COMMENTS
12-17-04	THIRD SUBMISSION – ADDRESSED SECOND SET OF CITY COMMENTS
01-04-05	FOURTH SUBMISSION – ADDRESSED VERBAL COMMENTS RECEIVED FROM CITY
02-10-05	FINAL SUBMISSION – ADDRESSED COMMENTS RECEIVED AT JANUARY PLANNING COMMISSION MEETING

TYPICAL SECTION
SECONDARY STREETS

FOR ILLUSTRATIVE PURPOSES ONLY

FINAL SECTION DETAILS TO BE APPROVED DURING SITE PLAN REVIEW
NOT TO SCALE

NOTE:
1) APPLICABLE TO ALL SECONDARY STREETS WITHIN THE HUNTFIELD DEVELOPMENT.

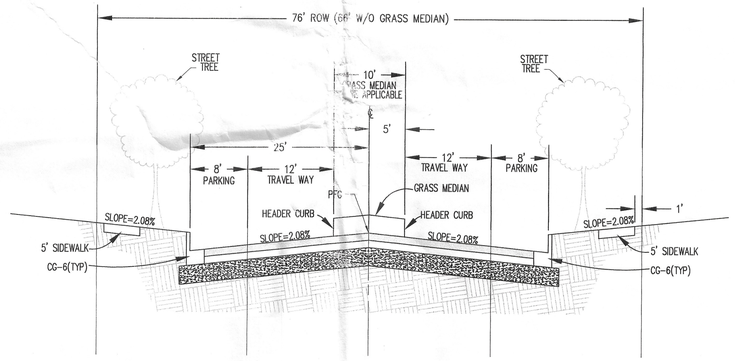

TYPICAL SECTION
PRIMARY STREET

FOR ILLUSTRATIVE PURPOSES ONLY

FINAL SECTION DETAILS TO BE APPROVED DURING SITE PLAN REVIEW
NOT TO SCALE

NOTE: APPLICABLE TO ALL SECONDARY STREETS WITHIN THE HUNTFIELD DEVELOPMENT.

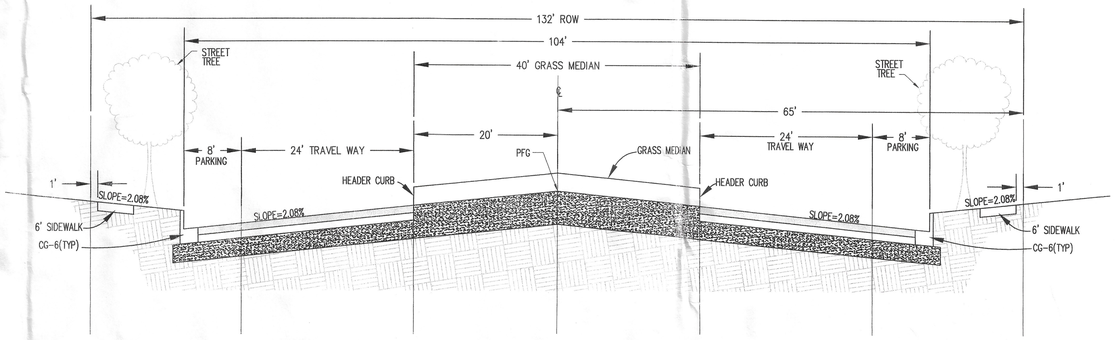

No.	DATE	REVISIONS
	02-10-05	ADDRESSED COMMENTS RECEIVED AT JANUARY PLANNING COMMISSION MEETING
	01-04-05	ADDRESSED VERBAL COMMENTS RECEIVED FROM CITY
	12-17-04	ADDRESSED SECOND SET OF CITY COMMENTS
	12-13-04	ADDRESSED CITY COMMENTS

PLAN DATE
11-29-04
12-13-04
12-17-04
01-04-05
02-10-05

Urban Engineering & Associates, Inc.
CIVIL ENGINEERS • LANDSCAPE ARCHITECTS • LAND SURVEYORS
PEGASUS BUSINESS CENTER
600 PEGASUS COURT - SUITE 101 WINCHESTER, VIRGINIA 22602
PHONE (540) 450-0211 FAX (540) 450-0210

DAVID E. LEMLOCK
REGISTERED
#1515
STATE OF WEST VIRGINIA
PROFESSIONAL ENGINEER
02-10-05

STATUS & TYPICAL SECTIONS

HUNTFIELD

OVERALL COMPOSITE SCHEMATIC

CHARLES TOWN CORPORATION
JEFFERSON COUNTY, WEST VIRGINIA

SCALE: N/A C.I. N/A DATE: NOVEMBER 2004

SHEET 2 OF 5

PREL-20107

SITE AREA (PARCEL 2)
DB 949 PG 203
TAX MAP 11, PARCEL 2
481.252 ACRES

SITE AREA (PARCEL 2)
517.59 ACRES
DB 949 PG 203
TAX MAP 11, PARCEL 1

LEGEND

ROADS
- PRIMARY
- SECONDARY
- TERTIARY

OPEN SPACE
- GENERAL
- TREE SAVE
- SCHOOL SITE OPEN SPACE

NEIGHBORHOOD RESIDENTIAL
- SINGLE FAMILY
- SINGLE FAMILY (ACTIVE ADULT COMMUNITY)
- TOWN HOMES
- TOWN HOME REGION
- MULTI-FAMILY
- ACTIVE COMMUNITY CENTER
- MUNICIPAL USE

- COMMERCIAL
- COMMERCIAL (VILLAGE CENTER)
- SCHOOL SITE

- FLOOD PLAIN
- WETLAND AREA
- SW= SIDEWALK
- EXISTING ROADS
- HUNTFIELD BOUNDARY
- TOTAL SITE AREA 998.8 ACRES

NOTES:

1) TOPSOIL BERM TO BE LOCATED WITHIN THE 200' OPEN SPACE BUFFER ALONG THE RAILROAD IN LOCATIONS DETERMINED WITH FUTURE SITE PLANS. REFERENCE SHEET 2 FOR TYPICAL BERM SECTION

2) A SEPARATE LANDSCAPE PLAN DETAILING THE PROPOSED BUFFERING BETWEEN THE HUNTFIELD/CLAYMONT BOUNDARY SHALL BE PROVIDED TO THE PLANNING COMMISSION FOR INFORMATIVE PURPOSES

3) APPROXIMATE LOCATION OF HIKER/BIKER TRAIL. FINAL LOCATION TO BE DETERMINED WITH FUTURE SITE PLANS & COORDINATED WITH TRAILS ON ADJOINER PARCELS.

RE-ALIGNED PROSPECT HILL BOULEVARD & SCOOL ACCESS
ALTERNATE LAYOUT - OPTION 2

NOTE: LOCATION AND DESIGN OF RE-ALIGNED PROSPECT HILL BOULEVARD AND UNION RIDGE DRIVE ARE PRELIMINARY. FINAL STREET DESIGN TO BE DETERMINED BASED UPON LOCATION OF SCHOOL LAYOUT AND ENTRANCE.

GRAPHIC SCALE
400 0 200 400 800 1600
(IN FEET)
1 inch = 400 ft.

No.	DATE	DESCRIPTION
		REVISIONS
	12-13-04	ADDRESSED CITY COMMENTS
	01-04-05	ADDRESSED SECOND SET OF CITY COMMENTS
	12-17-04	ADDRESSED VERBAL COMMENTS RECEIVED FROM CITY
	01-04-05	PLANNING COMMISSION MEETING
	02-10-05	ADDRESSED COMMENTS RECEIVED AT JANUARY

PLAN DATE
11-29-04
12-13-04
12-17-04
01-04-05
02-10-05

Urban Engineering & Associates, Inc.
CIVIL ENGINEERS • LANDSCAPE ARCHITECTS • LAND SURVEYORS
PEGASUS BUSINESS CENTER
600 PEGASUS COURT - SUITE 101 WINCHESTER, VIRGINIA 22602
PHONE (540) 450-0211 FAX (540) 450-0210

CIRCULATION & OPEN SPACE
HUNTFIELD
OVERALL COMPOSITE SCHEMATIC
CHARLES TOWN CORPORATION
JEFFERSON COUNTY, WEST VIRGINIA

DATE: NOVEMBER 2004
SCALE: 1"=400'
C.I. N/A

SHEET 3 OF 5

PREL-20107

PARCELS AFFECTED BY THIS SCHEMATIC

DIST.	MAP	PARCEL	LOT	REFERENCE DB/PG	ZONING
CTC	11A	1	1	973/335	NR
CTC	11A	2	2	983/357	NR
CTC	11A	3	3	976/549	NR
CTC	11A	4	4	966/353	NR
CTC	11A	5	5	966/353	NR
CTC	11A	6	6	976/351	NR
CTC	11A	7	7	976/288	NR
CTC	11A	8	8	986/738	NR
CTC	11A	9	9	984/39	NR
CTC	11A	10	10	990/243	NR
CTC	11A	11	11	979/8	NR
CTC	11A	12	12	984/37	NR
CTC	11A	13	13	970/615	NR
CTC	11A	14	14	983/408	NR
CTC	11A	15	15	993/697	NR
CTC	11A	16	16	984/89	NR
CTC	11A	17	17	985/481	NR
CTC	11A	18	18	982/361	NR
CTC	11A	19	19	970/615	NR
CTC	11A	20	20	949/203	NR
CTC	11A	21	21	996/207	NR
CTC	11A	22	22	991/566	NR
CTC	11A	23	23	989/725	NR
CTC	11A	24	24	993/257	NR
CTC	11A	25	25	983/284	NR
CTC	11A	26	26	979/395	NR
CTC	11A	27	27	979/602	NR
CTC	11A	28	28	983/690	NR
CTC	11A	29	29	987/405	NR
CTC	11A	30	30	985/719	NR
CTC	11A	31	31	986/82	NR
CTC	11A	32	32	985/187	NR
CTC	11A	33	33	985/189	NR
CTC	11A	34	34	985/150	NR
CTC	11A	35	35	989/639	NR
CTC	11A	36	36	988/599	NR
CTC	11A	37	37	992/533	NR
CTC	11A	38	38	949/203	NR
CTC	11A	39	39	988/418	NR
CTC	11A	40	40	949/203	NR
CTC	11A	41	41	985/156	NR
CTC	11A	42	42	983/683	NR
CTC	11A	43	43	986/80	NR
CTC	11A	44	44	984/81	NR
CTC	11A	45	45	972/613	NR
CTC	11A	46	46	972/613	NR
CTC	11A	47	47	984/85	NR
CTC	11A	48	48	982/524	NR
CTC	11A	49	49	982/682	NR
CTC	11A	50	50	982/635	NR
CTC	11A	51	51	981/531	NR
CTC	11A	52	52	982/234	NR
CTC	11A	53	53	994/15	NR
CTC	11A	54	54	949/203	NR
CTC	11A	55	55	995/48	NR
CTC	11A	56	56	997/536	NR
CTC	11A	57	57	987/63	NR
CTC	11A	58	58	987/14	NR
CTC	11A	59	59	987/184	NR
CTC	11A	60	60	988/585	NR
CTC	11A	61	61	989/59	NR
CTC	11A	62	62	989/57	NR
CTC	11A	63	63	949/203	NR
CTC	11A	64	64	990/539	NR
CTC	11A	65	65	990/539	NR
CTC	11A	66	66	990/539	NR
CTC	11A	67	67	982/147	NR
CTC	11A	68	68	979/466	NR
CTC	11A	69	69	995/569	NR
CTC	11A	69A	69A	949/203	NR
CTC	11A	70	70	994/506	NR
CTC	11A	70A	70A	996/242	NR
CTC	11A	71	71	949/203	NR
CTC	11A	71A	71A	994/15	NR
CTC	11A	72	72	997/526	NR
CTC	11A	72A	72A	995/203	NR
CTC	11A	73	73	995/484	NR
CTC	11A	74	74	994/504	NR
CTC	11A	75	75	996/544	NR
CTC	11A	76	76	986/180	NR
CTC	11A	77	77	995/108	NR
CTC	11A	78	78	998/153	NR
CTC	11A	78A	78A	997/690	NR
CTC	11A	79	79	994/15	NR
CTC	11A	79A	79A	998/151	NR
CTC	11A	80	80	997/558	NR
CTC	11A	80A	80A	997/613	NR
CTC	11A	81	81	994/15	NR
CTC	11A	82	82	998/149	NR
CTC	11A	83	83	997/566	NR
CTC	11A	84	84	989/31	NR
CTC	11A	85	85	989/31	NR
CTC	11A	86	86	990/539	NR
CTC	11A	87	87	989/31	NR
CTC	11A	88	88	986/78	NR
CTC	11A	89	89	977/292	NR
CTC	11A	90	90	993/491	NR
CTC	11A	91	91	985/55	NR
CTC	11A	92	92	975/265	NR
CTC	11A	93	93	971/529	NR
CTC	11A	94	94	973/521	NR
CTC	11A	95	95	979/10	NR
CTC	11A	96	96	974/340	NR
CTC	11A	97	97	996/19	NR
CTC	11A	98	98	974/670	NR
CTC	11A	99	99	981/332	NR
CTC	11A	100	100	980/682	NR
CTC	11A	101	101	981/278	NR
CTC	11A	102	102	985/226	NR
CTC	11A	103	103	986/304	NR
CTC	11A	104	104	986/137	NR
CTC	11A	105	105	988/595	NR
CTC	11A	106	106	989/12	NR
CTC	11A	107	107	988/593	NR
CTC	11A	108	108	949/203	NR
CTC	11A	109	109	949/203	NR
CTC	11A	109A	109A	994/15	NR
CTC	11A	110	110	949/203	NR
CTC	11A	111	111	949/203	NR
CTC	11A	111A	111A	994/15	NR
CTC	11A	112	112	980/476	NR
CTC	11A	113	113	980/592	NR
CTC	11A	PARK	D+E	949/203	NR
CTC	11A	COM1	C	949/203	NR
CTC	11A	COM2	F	949/203	NR

DIST.	MAP	PARCEL	LOT	REFERENCE DB/PG	ZONING
CTC	11A	CMR1	A	949/203	NR
CTC	11A	CMR2	B	949/203	NR
CTC	11A	114	114		NR
CTC	11A	115	115		NR
CTC	11A	116	116		NR
CTC	11A	117	117		NR
CTC	11A	118	118		NR
CTC	11A	119	119		NR
CTC	11A	120	120		NR
CTC	11A	121	121		NR
CTC	11A	122	122		NR
CTC	11A	123	123		NR
CTC	11A	124	124		NR
CTC	11A	125	125		NR
CTC	11A	126	126		NR
CTC	11A	127	127		NR
CTC	11A	128	128		NR
CTC	11A	129	129		NR
CTC	11A	130	130		NR
CTC	11A	131	131		NR
CTC	11A	132	132		NR
CTC	11A	133	133		NR
CTC	11A	134	134		NR
CTC	11A	135	135		NR
CTC	11A	136	136		NR
CTC	11A	137	137		NR
CTC	11A	138	138		NR
CTC	11A	139	139		NR
CTC	11A	140	140		NR
CTC	11A	141	141		NR
CTC	11A	142	142		NR
CTC	11A	143	143		NR
CTC	11A	144	144		NR
CTC	11A	145	145		NR
CTC	11A	146	146		NR
CTC	11A	147	147		NR
CTC	11A	148	148		NR
CTC	11A	149	149		NR
CTC	11A	150	150		NR
CTC	11A	151	151		NR
CTC	11A	152	152		NR
CTC	11A	153	153		NR
CTC	11A	154	154		NR
CTC	11A	155	155		NR
CTC	11A	156	156		NR
CTC	11A	157	157		NR
CTC	11A	158	158		NR
CTC	11A	159	159		NR
CTC	11A	160	160		NR
CTC	11A	161	161		NR
CTC	11A	162	162		NR
CTC	11A	163	163		NR
CTC	11A	164	164		NR
CTC	11A	165	165		NR
CTC	11A	166	166		NR
CTC	11A	167	167		NR
CTC	11A	168	168		NR
CTC	11A	169	169		NR
CTC	11A	170	170		NR
CTC	11A	171	171		NR
CTC	11A	172	172		NR
CTC	11A	173	173		NR
CTC	11A	174	174		NR
CTC	11A	175	175		NR
CTC	11A	176	176		NR
CTC	11A	177	177		NR
CTC	11A	178	178		NR
CTC	11A	179	179		NR
CTC	11A	180	180		NR
CTC	11A	181	181		NR
CTC	11A	182	182		NR
CTC	11A	183	183		NR
CTC	11A	184	184		NR
CTC	11A	185	185		NR
CTC	11A	186	186		NR
CTC	11A	187	187		NR
CTC	11A	188	188		NR
CTC	11A	189	189		NR
CTC	11A	190	190		NR
CTC	11A	COM	2A		NR
CTC	11A	PARK	2B		NR
CTC	11A	PARK	2C		NR
CTC	11A	191	191		NR
CTC	11A	192	192		NR
CTC	11A	193	193		NR
CTC	11A	194	194		NR
CTC	11A	195	195		NR
CTC	11A	196	196		NR
CTC	11A	197	197		NR
CTC	11A	198	198		NR
CTC	11A	199	199		NR
CTC	11A	200	200		NR
CTC	11A	201	201		NR
CTC	11A	202	202		NR
CTC	11A	203	203		NR
CTC	11A	204	204		NR
CTC	11A	205	205		NR
CTC	11A	206	206		NR
CTC	11A	207	207		NR
CTC	11A	208	208		NR
CTC	11A	209	209		NR
CTC	11A	210	210		NR
CTC	11A	211	211		NR
CTC	11A	212	212		NR
CTC	11A	213	213		NR
CTC	11A	214	214		NR
CTC	11A	215	215		NR
CTC	11A	216	216		NR
CTC	11A	217	217		NR
CTC	11A	218	218		NR
CTC	11A	219	219		NR
CTC	11A	220	220		NR
CTC	11A	221	221		NR
CTC	11A	222	222		NR
CTC	11A	223	223		NR
CTC	11A	224	224		NR
CTC	11A	225	225		NR
CTC	11A	226	226		NR
CTC	11A	227	227		NR
CTC	11A	228	228		NR
CTC	11A	229	229		NR
CTC	11A	230	230		NR
CTC	11A	231	231		NR
CTC	11A	232	232		NR
CTC	11A	233	233		NR

PARCELS AFFECTED BY THIS SCHEMATIC

DIST.	MAP	PARCEL	LOT	REFERENCE DB/PG	ZONING
CTC	11A	234			NR
CTC	11A	235	235		NR
CTC	11A	236	236		NR
CTC	11A	237	237		NR
CTC	11A	238	238		NR
CTC	11A	239	239		NR
CTC	11A	240	240		NR
CTC	11A	241	241		NR
CTC	11A	242	242		NR
CTC	11A	243	243		NR
CTC	11A	243	243		NR
CTC	11A	244	244		NR
CTC	11A	262	262		NR
CTC	11A	263	263		NR
CTC	11A	264	264		NR
CTC	11A	265	265		NR
CTC	11A	PARK	2D		NR
CTC	11A	PARK	2F		NR
CTC	11A	379	379		NR
CTC	11A	380	380		NR
CTC	11A	381	381		NR
CTC	11A	382	382		NR
CTC	11A	383	383		NR
CTC	11A	384	384		NR
CTC	11A	385	385		NR
CTC	11A	386	386		NR

DIST.	MAP	PARCEL	LOT	REFERENCE DB/PG	ZONING
CTC	11A	387	387		NR
CTC	11A	388	388		NR
CTC	11A	389	389		NR
CTC	11A	390	390		NR
CTC	11A	391	391		NR
CTC	11A	392	392		NR
CTC	11A	393	393		NR
CTC	11A	394	394		NR
CTC	11A	395	395		NR
CTC	11A	396	396		NR
CTC	11A	397	397		NR
CTC	11A	398	398		NR
CTC	11A	399	399		NR
CTC	11A	400	400		NR
CTC	11A	401	401		NR
CTC	11A	402	402		NR
CTC	11A	403	403		NR
CTC	11A	404	404		NR
CTC	11A	405	405		NR
CTC	11A	406	406		NR
CTC	11A	407	407		NR
CTC	11A	408	408		NR
CTC	11A	409	409		NR
CTC	11A	410	410		NR
CTC	11A	411	411		NR
CTC	11A	412	412		NR

DIST.	MAP	PARCEL	LOT	REFERENCE DB/PG	ZONING
CTC	11A	413	413		NR
CTC	11A	414	414		NR
CTC	11A	415	415		NR
CTC	11A	416	416		NR
CTC	11A	417	417		NR
CTC	11A	418	418		NR
CTC	11A	419	419		NR
CTC	11A	420	420		NR
CTC	11A	421	421		NR
CTC	11A	422	422		NR
CTC	11A	423	423		NR
CTC	11A	424	424		NR
CTC	11A	425	425		NR
CTC	11A	426	426		NR
CTC	11A	427	427		NR
CTC	11A	428	428		NR
CTC	11A	429	429		NR
CTC	11A	430	430		NR
CTC	11A	431	431		NR
CTC	11A	432	432		NR
CTC	11A	433	433		NR
CTC	11A	434	434		NR
CTC	11A	435	435		NR
CTC	11A	436	436		NR
CTC	11A	437	437		NR
CTC	11A	438	438		NR
CTC	11A	439	439		NR
CTC	11A	440	440		NR
CTC	11A	441	441		NR
CTC	11A	442	442		NR
CTC	11A	443	443		NR
CTC	11A	444	444		NR
CTC	11A	445	445		NR
CTC	11A	446	446		NR
CTC	11A	447	447		NR
CTC	11A	448	448		NR
CTC	11A	449	449		NR
CTC	11A	450	450		NR
CTC	11A	451	451		NR
CTC	11A	452	452		NR
CTC	11A	453	453		NR
CTC	11A	454	454		NR
CTC	11A	455	455		NR
CTC	11A	456	456		NR
CTC	11A	457	457		NR
CTC	11A	458	458		NR
CTC	11A	459	459		NR
CTC	11A	460	460		NR
CTC	11A	461	461		NR
CTC	11A	462	462		NR
CTC	11A	463	463		NR
CTC	11A	464	464		NR
CTC	11A	465	465		NR
CTC	11A	466	466		NR
CTC	11A	PARK	1		NR
CTC	11A	PARK	2		NR
CTC	11A	PARK	3		NR

GRAPHIC SCALE

400 0 200 400 800 1600

(IN FEET)
1 inch = 400 ft.

SITE AREA (PARCEL 2)
DB 949 PG 203
TAX MAP 11, PARCEL 2
481.252 ACRES

SITE AREA (PARCEL 2)
517.59 ACRES
DB 949 PG 203
TAX MAP 11, PARCEL 1

LOCATION OF SINK HOLE SIGNS
MITIGATION OF SINK HOLES TO BE IN ACCORDANCE WITH RECOMMENDATIONS FROM GEOTECHNICAL ENGINEERS

AGRICULTURAL
WINCHESTER COLD STORAGE CO., INC.

NORFOLK & SOUTHERN RAILROAD
66' WIDE RIGHT OF WAY

EX. RAILROAD

INTER-PARCEL CONNECTOR

LAND N/F OF WILLIAM P.C. PERRY EST.

200' OPEN SPACE

LAND N/F OF BOARD OF EDUCATION JEFFERSON CTY.

ELEMENTARY SCHOOL

CEMETARY of GIBSONTOWN

FEMA FLOOD PLAIN ZONE 'A' PER "FIRM #5400650050 C" DATED AUG. 2, 1993

EXISTING WETLANDS

SWM / BMP

UNNAMED TRIBUTARY OF EVITTS RUN

EXISTING PHASE 3B

EXISTING PHASE 3A

EXISTING PHASE 2B

EXISTING PHASE 2A

EXISTING PHASE 1

SWM

BALL FIELDS

LOCATION OF SINK HOLE SIGN
MITIGATION OF SINK HOLES TO BE IN ACCORDANCE WITH RECOMMENDATIONS FROM GEOTECHNICAL ENGINEERS

HIGH SCHOOL

EVENTS PARKING

SPRUCE HILL LLC

HERTELENDY

BECKHARD

CHICCHIRICHI

AUGUSTINE AVE.

SMITH

REED

BROOKER

FORD

CLABAUGH

BLAY

GRIMES

CAVE ROAD

FURIOSO

JEHOVAHS WITNESSES (CHURCH)

WV ROUTE 340/16 TO CHARLES TOWN, WV

WV ROUTE 340/16 TO BERRYVILLE

WV ROUTE 13/3 HUYETT ROAD

HUYETT ROAD

CHARLES TOWN BYPASS

US ROUTE 340 TO BERRYVILLE

GIBSONTOWN ROAD

CLAYMONT

CLAYMONT SOCIETY FOR CONTINUOUS EDUCATION, INC

CLAYMONT SOCIETY FOR CONTINUOUS EDUCATION, INC

NORTH FORK BULLSKIN RUN

EXISTING WETLANDS

EXISTING WETLANDS

200' OPEN SPACE

NORFOLK & SOUTHERN RAILROAD 66' WIDE RIGHT OF WAY

200' OPEN SPACE

SPRUCE HILL LLC

HUYETT ROAD

WV ROUTE 13

OAKMONT DRIVE

LOCUST DRIVE

SHENANDOAH DEVELOPMENT CORP.

TUSCAWILLOW DRIVE

LOCUST HILL LLC

WV ROUTE 13
SUMMIT POINT ROAD

SEVENTH DAY ADVENTIST CHURCH

PREVIOUSLY APPROVED SCHEMATICS

SCHEMATICS PREVIOUSLY APPROVED AS "FUTURE DEVELOPMENT"

CURRENT SCHEMATICS

PHASE BOUNDARY
Note: Phase boundaries shown correspond to phase boundaries of site plans previously approved or currently in review.

EXISTING TREES (WITHIN SITE LIMITS)

No.	DATE	DESCRIPTION
	02-10-05	ADDRESSED COMMENTS RECEIVED AT JANUARY PLANNING COMMISSION MEETING
	01-04-05	ADDRESSED VERBAL COMMENTS RECEIVED FROM CITY
	12-17-04	ADDRESSED SECOND SET OF CITY COMMENTS
	12-13-04	ADDRESSED CITY COMMENTS

REVISIONS

PLAN DATE
11-29-04
12-13-04
12-17-04
01-04-05
01-10-05
02-10-05

Urban Engineering & Associates, Inc.
CIVIL ENGINEERS - LANDSCAPE ARCHITECTS - LAND SURVEYORS
PEGASUS BUSINESS CENTER
600 PEGASUS COURT - SUITE 101 WINCHESTER, VIRGINIA 22602
PHONE (540) 450-0211 FAX (540) 450-0210

REGISTERED C. LELLOCK #1537 STATE OF VIRGINIA LAND SURVEYOR

Overall Schematic Comparison, Existing Topography & Environmental Features

OVERALL COMPOSITE SCHEMATIC

HUNTFIELD
CHARLES TOWN CORPORATION
JEFFERSON COUNTY, WEST VIRGINIA

SCALE: 1"=400' C.I. = 10' DATE: NOVEMBER 2004

SHEET 4 OF 5

PREL-20107

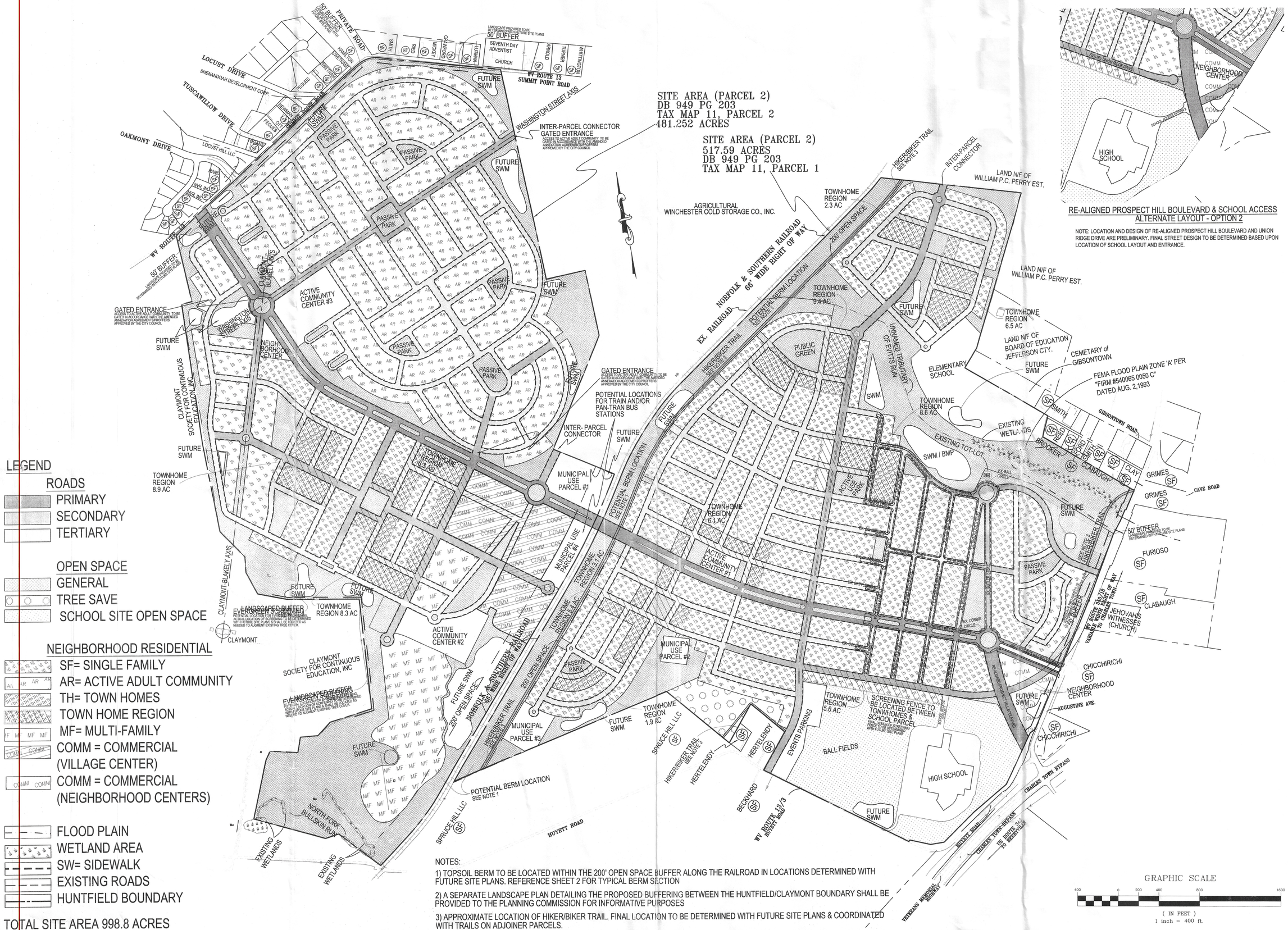

RE-ALIGNED PROSPECT HILL BOULEVARD & SCHOOL ACCESS
ALTERNATE LAYOUT - OPTION 2

NOTE: LOCATION AND DESIGN OF RE-ALIGNED PROSPECT HILL BOULEVARD AND UNION RIDGE DRIVE ARE PRELIMINARY. FINAL STREET DESIGN TO BE DETERMINED BASED UPON LOCATION OF SCHOOL LAYOUT AND ENTRANCE.

REVISIONS

No.	DATE	DESCRIPTION
1	02-10-05	ADDRESSED COMMENTS RECEIVED AT JANUARY PLANNING COMMISSION MEETING
2	01-04-05	ADDRESSED VERBAL COMMENTS RECEIVED FROM CITY
3	12-17-04	ADDRESSED SECOND SET OF CITY COMMENTS
4	12-13-04	ADDRESSED CITY COMMENTS

PLAN DATE
11-29-04
12-13-04
12-17-04
01-04-05
02-10-05

Urban Engineering & Associates, Inc.
CIVIL ENGINEERS • LANDSCAPE ARCHITECTS • LAND SURVEYORS
PEGASUS BUSINESS CENTER
600 PEGASUS COURT - SUITE 101 WINCHESTER, VIRGINIA 22602
PHONE (540) 450-0211 FAX (540) 450-0210

Overall Site Conditions

HUNTFIELD
OVERALL COMPOSITE SCHEMATIC
CHARLES TOWN CORPORATION
JEFFERSON COUNTY, WEST VIRGINIA

DATE: NOVEMBER 2004
SCALE: 1"=400' C.I. N/A

SHEET 5 OF 5

PREL-20107

AMENDED - SCHEMATIC PLAN
HUNTFIELD - OVERALL COMPOSITE SCHEMATIC

SCHM 2004-0002
TAX MAP 11, PARCEL 1 & PARCEL 2
DR ACQUISTIONS - DEED BOOK 1263 PAGE 99
CHARLES TOWN CORPORATION
JEFFERSON COUNTY, WV

OWNER / DEVELOPER
DR ACQUISITIONS LLC
7945 WORMANS MILL RD
FREDERICK, MD 21701

STATEMENT OF ACCEPTANCE

THE OWNER/DEVELOPER, IN SIGNING THIS PLAT, AGREES TO ABIDE BY ALL CONDITIONS, TERMS, AND SPECIFICATIONS PROVIDED HEREON.

DR ACQUISITIONS LLC
7945 WORMANS MILL RD FREDERICK, MD 21701

VICINITY MAP
SCALE : 1"= 2000'

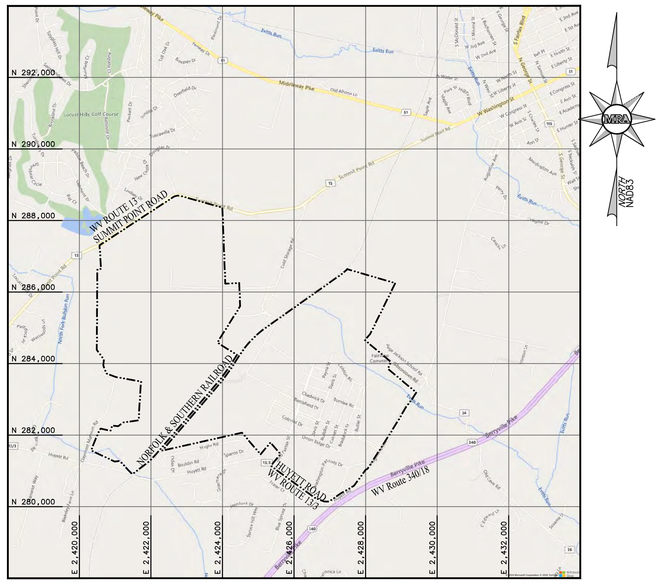

INTRODUCTION

This description and the accompanying illustrative graphics are a part of the Huntfield Overall Composite Schematic for the Neighborhood Residential zoning of Huntfield. This schematic encompasses all existing and future phases of Huntfield North and South of the Norfolk & Southern Railroad. The Overall Composite Schematic includes the previously approved Huntfield Composite Schematic I, which included and superseded the following previously approved schematics: Huntfield Phase 1 Schematic, Huntfield Phase 1&2A Schematic, Huntfield Phase 2B Schematic. The Huntfield Overall Composite Schematic supersedes all previously approved schematics, and all development shall be in conformance with it.

Assuming development proceeds in an orderly fashion, a phasing plan will be submitted to the City of Charles Town within twelve (12) months of the approval date of the Huntfield Overall Composite Schematic. In the event that the development is delayed, an alternate time frame for submittal of the phasing plan will be agreed upon by the City and the Applicant. The phasing plan will be provided for the information of the City and will include information pertaining to construction of community centers and recreational areas to ensure adequate amenities are provided in conjunction with residential areas. Per the Huntfield Proffers, "Huntfield has agreed to approach Pan Tran to provide shuttle service between the Property and downtown Charles Town." Information pertaining to approach of Huntfield to Pan-Tran and potential train commuter service shall also be included in the phasing plan. See the "Traffic Circulation and Analysis" section of this document for additional information to be provided in the phasing plan.

The items included in this Description are organized under the headings of:

- Parcel History
- Schematic Plan Requirements and Submission
- Land Area
- Surrounding Land Use and Existing Streets
- Natural Features
- Zoning Requirements
- Generalized Land Use
- Traffic Circulation & Analysis

PARCEL HISTORY

List all pending or previously approved applications on the subject parcel(s), including previous schematic plan applications if this application is a schematic plan amendment

APPLICATION #	ASSOCIATED PROJECT	STATUS	APPROVAL DATE
	HUNTFIELD, PHASE 1 SCHEMATIC	APPROVED	2/11/2002
STPL 2002-0001	HUNTFIELD, PHASE 1 (SITE PLAN)	APPROVED	6/24/2002
SBRD 2002-0001	HUNTFIELD, PHASE 1 RECORD PLAT	APPROVED	7/29/2002
RPOC 2003-0001	HUNTFIELD, PHASE 1 (RECORD PLAT CORRECTION)	APPROVED	Recorded 9/9/03
	HUNTFIELD, REVISED PHASE 1&2A SCHEMATIC	APPROVED	10/22/2002
SPAM 2003-001	HUNTFIELD, PHASE 1 REVISED (SITE PLAN AMMENDMENT)	APPROVED	5/28/2003
SBDR 2003-0001/RPAM 2003-0001	HUNTFIELD, PHASE 1 REVISED (RECORD PLAT AMMENDMENT)	APPROVED	6/16/2003
SCHM 2003-0003	HUNTFIELD, COMPOSITE SCHEMATIC 1	APPROVED	5/28/2003
SPAM 2003-0002	HUNTFIELD, PHASE 1 BLOCK 1 REVISION (SITE PLAN AMMENDMENT)	APPROVED	10/27/2003
RPAM 2003-0002	HUNTFIELD, PHASE 1 BLOCK 1 REVISION (RECORD PLAT AMMENDMENT)	APPROVED	10/27/2003
STPL 2003-0001	HUNTFIELD, PHASE 2A (SITE PLAN)	APPROVED	5/28/2003
SBRD 2003-0002	HUNTFIELD, PHASE 2A RECORD PLAT	APPROVED	3/30/2004
SCHM 2003-0001	HUNTFIELD, PHASE 2B SCHEMATIC	APPROVED	2/24/2003
STPL 2003-0006	HUNTFIELD, PHASE 2B (SITE PLAN)	APPROVED	8/5/2004
SBRD 2004-0002	HUNTFIELD, PHASE 2B SECTION 1A RECORD PLAT	APPROVED	5/24/2004
SBRD 2004-0002	HUNTFIELD, PHASE 2B SECTION 1B RECORD PLAT	APPROVED	10/25/2004
STPL 2003-0009	HUNTFIELD, PHASE 3A (SITE PLAN)	APPROVED	5/24/2004
SBRD 2004-0003	HUNTFIELD, PHASE 3A SECTION 1 RECORD PLAT	APPROVED	5/24/2004
SBRD 2004-0003	HUNTFIELD, PHASE 3A SECTION 2 RECORD PLAT	APPROVED	6/28/2004
STPL 2004-0006	HUNTFIELD, PHASE 3B (SITE PLAN)	APPROVED	5/22/2006
STPL 2009-0005	HUNTFIELD, PHASE 3A BLOCK 29 REVISION	APPROVED	12/18/2009
STPL 2024-0005	HUNTFIELD, PHASE 3B REVISION	APPROVED	08/26/2024

NOTES:
1. HUNTFIELD COMPOSITE SCHEMATIC 1 (SCHM 2003-0003) REPLACED PREVIOUSLY APPROVED HUNTFIELD SCHEMATICS.
2. THE DATE LISTED FOR THE PHASE 2B SITE PLAN APPROVAL CORRESPONDS TO THE DATE THAT THE REVISED DEPARTMENT OF HIGHWAYS PERMIT WAS ISSUED WHICH COVERED THE OUTSTANDING LOTS IN HUNTFIELD 2B.

SCHEMATIC PLAN REQUIREMENTS AND SUBMISSION

The following table compares submission requirements of the zoning ordinance for Neighborhood Residential schematic plans (@Article 8A c) 1.b.) and items submitted as the Huntfield Overall Composite Schematic.

Table 1

Items Required in the Zoning Ordinance	*HUNTFIELD Item Submitted*
Indicate the existing parcel	*base map with property lines, parcels, sizes*
Natural existing features, contours @ 10' intervals	*topography and natural feature map*
Surrounding uses	*map of surrounding uses and existing streets*
Proposed general land use	*proposed general land use map*
Circulation patterns	*existing permitted/constructed entrances, circulation, open space distribution overlay map*

LAND AREA

The total area of the Huntfield, Overall Composite Schematic within the City is 998.8 acres. This area includes the previously approved Huntfield Composite Schematic I, which contained 313.3 acres.

The existing parcels making up this land are south of the Norfolk and Southern Railroad)

Total north of Norfolk and Southern Railroad = *481.252* Acres
Total south of Norfolk and Southern Railroad = *517.590* Acres
998.842 Acres

SURROUNDING LAND USE AND EXISTING STREETS

Surrounding Land Use

Surrounding land use to the North and across West Virginia Route 13 includes the Locust Hills and Tuscawilla Hills single family subdivision and the Locust Hills Golf Course. North of the railroad to the west is property owned by the Claymont Society for Continuous Education, which contains the Claymont Museum.

Existing Streets

Existing streets include Summit Point Road (WV Rt.13), Route *340/18* (Augustine Avenue), and Route *13/1* (Huyett Road). Currently under construction and or built are: Prospect Boulevard, Burnlea Road, Colston Road, Butler Street, Braddock Street, Calmes Street, Bullskin Street, Colonial Drive, Davis Street, and Payne Street. A small portion of Battlefield Drive, Chadwick Drive, Silver Leaf Drive, and Holly Springs Drive are currently under construction and or have been built. All the aforementioned streets were previously approved with the Huntfield Phase 1, Phase 2A, Phase 2B, and Phase 3A construction plans.

NATURAL FEATURES

The property is and has been farmland so there is very little wooded or forested area and none of any quality. The property was farmed as recently as the fall of 2001.

The property has no real prominent features. The site is relatively flat and open through the middle of the property with a wooded area to the west. It has areas of woods, areas of dense thick brush and some high open areas.

The North Fork of the Bullskin Run crosses the property on the southwest and the drain of an unnamed wet weather stream crosses the east of the property.

A portion of the property is located in the FEMA Flood Plain Zone 'A' per FIRM "#540065 0050 C" dated August 2, 1993. However, this portion of the property is not to be developed.

ZONING REQUIREMENTS

Zoning requirements for Neighborhood Residential (@ Article 8A b) 1., 3.-5.) and the general approach to these requirements in the Huntfield Schematic Plan are presented in the following table.

Table 2 (Note: Acreages shown are approximate. Actual areas to be determined at the time of recordation of the record plat pertaining to each Phase of the development. All areas shall be in general conformance with the Overall Composite Schematic.)

Items Required in the Zoning Ordinance	*HUNTFIELD – Overall Composite Schematic Item Submitted*
Parcels 5 acres or larger	*998.8 Acres*
Mix of uses	*Mixed-Use Development*
Compatible with surrounding uses	*Compatible with existing subdivisions*
50% of total area to be residential	*Required: 499.4 Acres* *Provided: 612.9 Acres includes ROW* ** An additional 74.1 acres not counted towards the Residential Area Requirements has been provided for school facilities* **An additional 12.9 acres not counted towards the Residential Area has been provided in Municipal Use Parcels* **An additional 14.7 acres not counted towards the Residential Area has been provided by parcels designated as Active Community Centers*
15% of area (less streets, sidewalks & drainage) in open space	*Required: 149.8 Acres* *Provided: 228.2 Acres includes open space medians* **An additional 38.5 acres of open space not counted towards the open space requirements is provided within the School Site*
Not less than 10% in office/retail * Includes 44 Live/Work Units	*Required: 99.9 Acres* *Provided: 26.1 Acres* **See "Commercial" Section of this document*
Residential Lots Provided	*1,283 Single Family* *692 Townhomes* *391 Multi-Family* *800 Age-Restricted SFD Lots (Washington Homes)* *44 Live/Work (Counted as Commercial Area)* *3,200 Total Dwelling units*

Items Required in the Zoning Ordinance	*HUNTFIELD – Overall Composite Schematic Item Submitted*
Number of lots: land area in sq. ft. / 10,000 *Note: For Townhome developments, each five (5) acres developed as townhouses constitutes 1 lot	*Required: 4,351 Lots Maximum* *Provided: 2,523 Lots* *Townhome Acreage = 74.6 acres* *Equivalent # Townhome Lots = 74.6 acres/5 = 15 Lots* *Total # Lots = (3,200 Units – 692 Townhomes) + 15 Equivalent # Townhome Lots = 2,523 Lots* *Number of Lots: 43,507,728 sq. ft. / 10,000 = 4,351 Lots*
Overall Maximum Residential Density *Note: For Townhome developments, each five (5) acres developed as townhouses constitutes 1 lot	*Required: Not to exceed 10 Units / Acre* *Provided: 2.5 Units/Acres* *Townhome Acreage = 74.6 acres* *Equivalent # Townhome Lots = 74.6 acres/5 = 15 Lots* *Total # Lots = (3,200 Units – 692 Townhomes) + 15 Equivalent # Townhome Lots = 2,523 Lots* *Overall density: 2,523 Lots / 998.8 Acres = 2.5 Units/Acres*
Maximum Density - Multi-Family	*Required:* not exceed 20 units per acre *Provided: 13.8 units/acre* *391 Units / 27.6 Acres =13.8 units/acre*
Maximum Density - Townhomes	*Required:* not exceed 10 units per acre *(modified per Huntfield proffers to 16 units/acre)* *Provided: 9.3 units/acre* *692 Townhomes / 74.6 Total Acres Including ROW = 9.3 Units/Acre*

The following is a partial listing of the conditions of the overall development per the "Letter of Clarification Huntfield Proffer Statement" dated March 28, 2002. See the aforementioned "Letter of Clarification Huntfield Proffer Statement" for a full listing of the proffers.

- Minimum lot width shall be reduced to 50 feet at the street.
- Minimum lot area shall be reduced to 5,000 square feet.
- Front yard setback shall be 25 feet from the edge of pavement.
- Encroachment within the front yard setback shall be no more than 30% or 8.34 feet. It appears that the percentage should be 33.3%.
- Side yard setbacks shall be reduced to 5 feet minimum.
- No setback from the property line for accessory structures shall be required.
- Minimum paving width shall be 24 feet.

The following is a partial listing of the, "Amended Huntfield Proffers" dated May 3, 2004. See the aforementioned "Amended Huntfield Proffers" for a full listing of the proffers.

- The minimum 200,000 square feet of commercial retail or office space proffered by Huntfield shall satisfy all requirements for land area devoted to office and or commercial. This agreement does not preclude Huntfield from developing commercial retail/office beyond the 200,000 square feet requirement.
- Huntfield will dedicate 15% of the total land are to open and recreational space. All active and passive recreational facilities provided in Huntfield shall be credited toward the 15% open space requirement specified herein. In addition, Huntfield will provide a minimum 50-foot buffer on either side of Bullskin Run measured from the edge of the stream bank and a landscaped 50-foot buffer along major highways (i.e. Route 340, 340 Bypass, WV Route 9).
- Maximum building heights shall be as follows:
  - Single Family Detached – 45', but not more than 3 stories
  - Townhouses 45', but not more than 3 stories
  - Multi-Family 90', but not more than 4 stories
  - Office, Commercial, Civic and Mixed Use 60' but not more than 5 stories
- Minimum lot widths shall be as follows:
  - Single Family Detached 50', however 45' for Active Adult Community (development)
  - Townhouses – Mix of 16' to 24'
- Minimum lot sizes shall be as follows:
  - Single Family Detached – 5,000 square feet, however 4,500 square feet for Active Adult Community (development)
  - Townhouses 1,600 square feet
- Townhouse portions of the development shall be permitted to have an area less than five acres
- Townhouse units shall be permitted at a maximum density of 16 units per acres
- The minimum rear yard setback for units with attached rear-load garages shall be 10'
- Alleys may be dead-end streets when intersections would cause a curb cut on a collector street
- Alleys may provide lot access and satisfy road frontage requirements when the lots served by those alleys front on open space
- Cul-de-sac streets shall be permitted in limited instances and require approval by the Planning Commission. When allowed, the cul-de-sacs terminus shall include a landscaped circle.
- The designated Village Center shall be permitted for Central Business District, General Commercial and Neighborhood Residential uses as defined in the present City of Charles Town Zoning Ordinance. The designated Neighborhood Centers shall be permitted for Office Residential, Neighborhood Residential and Neighborhood Commercial uses as defined in the present City of Charles Town Zoning Ordinance. Future changes in the existing Zoning Ordinances shall be made applicable to this paragraph.

Table 3 (Note: Acreages shown are approximate. Actual areas to be determined at the time of recordation of the record plat pertaining to each Phase of the development. All areas shall be in general conformance with the Overall Composite Schematic.)

Use	Required	Provided
Site Area	Min. 5 Acres	998.8 Total Acres
Existing		
Composite Schematic I		313.3 Acres
Proposed:		
Residential (includes rights of way)	499.4 Acres	612.9 Acres
Dedicated School Parcels		74.1 Acres
Municipal Use Parcels		12.9 Acres
Active Community Centers		14.7 Acres
Open Space (Includes open space medians)	149.8 Acres	228.2 Acres
Additional Open Space Provided in School Site		38.5 Acres
Commercial (Includes 44 Live/Work Units) *See "Commercial" Section of this document	99.9 Acres	26.1 Acres

GENERALIZED LAND USE

Proposed generalized land use in this Schematic Plan submission is as follows:

Table 4 (Note: Acreages shown are approximate. Actual areas to be determined at the time of recordation of the record plat pertaining to each Phase of the development. All areas shall be in general conformance with the Overall Composite Schematic.)

Use	Required	Provided
Site Area	Min. 5 Acres	998.8 Total Acres
Existing		
Composite Schematic I		313.3 Acres
Proposed:		
Residential (includes rights of way)	499.4 Acres	612.9 Acres
Dedicated School Parcels		74.1 Acres
Municipal Use Parcels		12.9 Acres
Active Community Centers		14.7 Acres
Open Space (Includes open space medians)	149.8 Acres	228.2 Acres
Additional Open Space Provided in School Site		38.5 Acres
Commercial (Includes 44 Live Work Units) *See "Commercial" Section of this document	99.9 Acres	26.1 Acres

Residential Area

This area consists of approximately 612.9 acres, and is projected to be developed with single family detached houses, town homes, and multi-family dwellings. It will also include an Active Adult Community as defined by the Active Adult Community Covenants. Lots sizes will vary throughout the development; however, all lots sizes will be in accordance with the proffers for the Huntfield development. All residential areas meet the density requirements set forth in the Zoning Ordinance except where modified by the Huntfield proffers. An additional 74.1 acres not counted towards the residential requirements has been provided for school facilities, and an additional 12.9 acres have been provided as Municipal Use Parcels. Municipal Use Parcel #1 contains approximately 5.4 acres and is a proposed location for a public administration building and potential train and/or Pan-Tran bus stations. Municipal Use Parcel #4, which contains approximately 3.0 acres, is also a potential location for train and/or Pan-Tran bus stations. Municipal Use Parcel #2 (1.5 acres) contains the water tower, and Municipal Use Parcel #3 (3.0 acres) is proposed as a ball field. Determination of final use of Municipal Parcels will be determined with future site plans. Additional areas also not included in the residential area requirements have been provided in parcels dedicated to Active Community Centers. Active Community Center #1 provides 1.6 acres, #2 provides 6.2 acres, and #3 provides 6.9 acres for a total of 14.7 acres of additional area provided by Active Community Centers. The final use and design of each Active Community Center will be determined at the site plan stage; however, they shall contain, but are not limited to the following: swimming pools, meeting facilities, and recreational facilities. These recreational amenities will be sized appropriately with adequate parking and ancillary support facilities, such as bathrooms, etc.

Commercial

The commercial areas shown have been revised from those shown on previous schematic plans in order to provide the most viable commercial locations. The commercial area requirements have been modified based on non-traditional design concepts. As specified in the Huntfield proffers, "a minimum 200,000 square feet of commercial, retail, or office space proffered by Huntfield shall satisfy all requirements for land area devoted to office and/or commercial. This agreement does not preclude Huntfield from developing commercial retail/office space beyond the 200,000 square feet requirement."

Commercial areas include a Village Center and multiple Neighborhood Centers providing 26.1 acres of commercial area. Per the Huntfield proffers, "The designated Village Center shall be permitted for Central Business District, General Commercial and Neighborhood Residential uses as defined in the present City of Charles Town Zoning Ordinance. The designated Neighborhood Centers shall be permitted for Office Residential, Neighborhood Residential and Neighborhood Commercial uses as defined in the present City of Charles Town Zoning Ordinance. Future changes in the existing Zoning Ordinances shall be made applicable to this paragraph." In addition, 44 live/work units provided in the commercial areas.

Open Space

Huntfield Overall Composite Schematic allocates approximately 228.2 acres of open space, which exceeds the Zoning Ordinance standard for open space requirements. This consists of dedicated open space parcels totaling approximately 217.9 acres with the remaining area located within the right of way. Not counted toward the open space requirements are 38.5 acres of open space located within in the School Site.

The dedicated parcels will contain an active use park, a public green, and multiple passive parks. The passive parks may contain, but are not limited to: picnic areas, playing fields, and grass areas. Final determination of passive parks use will be determined with future site plans. One lot-lot is currently constructed on the eastern side of the project. At a minimum, one additional tot-lot shall be provided on the western site. This tot-lot shall be located south of Future Prospect Hill Boulevard within close proximity to the town home regions.

A hiker-biker trail will be provided within open space parcels and other areas with the development. The trail will be coordinated with trails located on adjoining parcels and may incorporate the use of sidewalks and roadways throughout the development as a part of the trail system.

The open space, to be located and designed during the site planning stage, would seek to achieve the following objectives:

- Provide the zoning ordinance-required open space.
- Provide some open space area easily accessible to all parts of Huntfield.
- Provide at least one area large enough for residents of different neighborhoods to gather together.
- Provide internal buffers between non-residential and residential uses.
- Incorporate passive and active component in Neighborhood open space areas.
- As new lots are added additional neighborhood park sites will be developed.

NOTES:
1) SEE SHEET 2 FOR TRAFFIC CIRCULATION & ANALYSIS
2) FOR LISTING OF AFFECTED PARCELS PLEASE SEE SHEET 4

SHEET INDEX

1. COVER SHEET & NARRATIVE
2. STATUS & TYPICAL ROAD SECTIONS
3. CIRCULATION & OPEN SPACE
4. SCHEMATIC COMPARISON
5. OVERALL SITE CONDITIONS
6. PHASING & PROFFER EXHIBIT

Approved:

Planning Commission Date
SCHM 2004-0002

DATE	REVISIONS

MORRIS & RITCHIE ASSOCIATES, INC.
ENGINEERS, PLANNERS, SURVEYORS AND LANDSCAPE ARCHITECTS
205 E. FIRST ROAD, SUITE 106
PURCELLVILLE, VA 20132
PHONE: (703) 994 - 4047
MRAGTA.COM

Copyright 2024 Morris & Ritchie Associates, Inc.

COVER SHEET & NARRATIVE

HUNTFIELD
OVERALL COMPOSITE SCHEMATIC
CITY OF CHARLES TOWN
JEFFERSON COUNTY, WEST VIRGINIA

JOB NO.:	22976
SCALE:	
DATE:	02/04/25
DRAWN BY:	CDS
DESIGN BY:	CDS
REVIEW BY:	TDH
SHEET:	1 OF 6

L:\Projects\Huntfield\Engineering\Master Development Plan\SHEETS\01.dwg, 2/4/2025 2:07:51 PM, CStephenson, 1:1:, Copyright 2025 Morris & Ritchie Associates, Inc.

TYPICAL SECTION
TERTIARY STREETS - ACTIVE ADULT COMMUNITY

FOR ILLUSTRATIVE PURPOSES ONLY

FINAL SECTION DETAILS TO BE APPROVED DURING SITE PLAN REVIEW

NOTE: APPLICABLE TO TERTIARY STREETS LOCATED WITHIN THE ACTIVE ADULT COMMUNITY. SEE DETAIL "TERTIARY STREETS - STANDARD DETAIL" FOR DETAIL OF TERTIARY STREETS LOCATED OUTSIDE OF ACTIVE ADULT COMMUNITY.

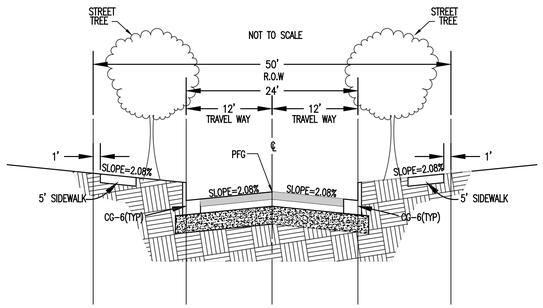

TYPICAL SECTION
TERTIARY STREETS (STANDARD DETAIL)

FOR ILLUSTRATIVE PURPOSES ONLY

FINAL SECTION DETAILS TO BE APPROVED DURING SITE PLAN REVIEW

NOTE: APPLICABLE TO TERTIARY STREETS LOCATED OUTSIDE OF ACTIVE ADULT COMMUNITY WITHOUT ON STREET PARKING.

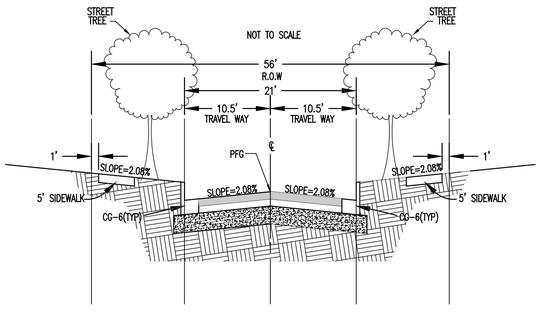

TYPICAL SECTION
TERTIARY STREETS (STANDARD DETAIL)

FOR ILLUSTRATIVE PURPOSES ONLY

FINAL SECTION DETAILS TO BE APPROVED DURING SITE PLAN REVIEW

NOTE: APPLICABLE TO TERTIARY STREETS LOCATED OUTSIDE OF ACTIVE ADULT COMMUNITY. SEE DETAIL "TERTIARY STREETS - ACTIVE ADULT COMMUNITY" FOR DETAIL OF TERTIARY STREETS LOCATED WITHIN THE ACTIVE ADULT COMMUNITY.

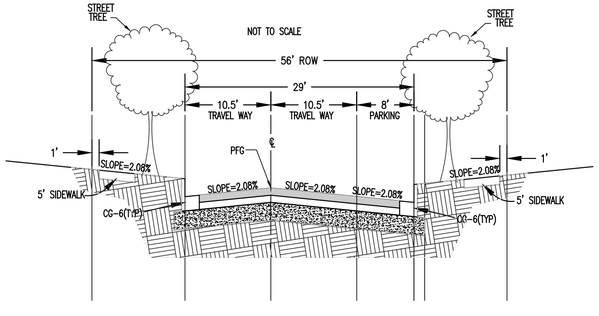

TYPICAL SECTION
SECONDARY STREETS

FOR ILLUSTRATIVE PURPOSES ONLY

FINAL SECTION DETAILS TO BE APPROVED DURING SITE PLAN REVIEW
NOT TO SCALE

NOTE:
1) APPLICABLE TO ALL SECONDARY STREETS WITHIN THE HUNTFIELD DEVELOPMENT.

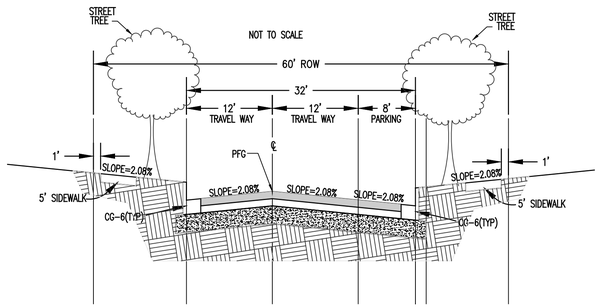

TRAFFIC CIRCULATION & ANALYSIS

The traffic circulation system has been designed to accomplish the following objectives:

- Achieve high levels of service by dispersing and balancing site generated traffic among available roads.
- Provide for connections with existing and future neighboring subdivisions & properties when applicable.
- Provide a planned hierarchy of roads including main and secondary roads.
- Respect the existing topography and landform in designing roads to avoid unnecessary or disruptive changes to the landscape.
- Provide good access to all roads adjoining the site but avoid a direct cut through or alternative to the existing interchange between WV Route 13 and Route 13/3.
- Provide pedestrian ways with subdivision and site plans which connect the complementary land uses and sub-neighborhoods within Huntfield, and which will include sidewalks next to streets with emphasis on pedestrian elements at the secondary road level rather than on the busier roads.
- Provide traffic calming at the internal intersection to help with pedestrian safety.

Roads within the Western Site have been aligned to provide views of historic Claymont (Claymont-Blakeley Axis) and the Charles Town Court House (Washington Street Axis).

A Phased Traffic Impact Analysis for Huntfield was prepared on May 5, 2004 by Patton Harris Rust & Associates. The analysis includes both site related and non-site related recommended transportation improvements. The Analysis is currently in review by the West Virginia Department of Highways. Per the recommendations made in the Traffic Analysis, the existing Prospect Hill Boulevard entrance will be abandoned and a "Re-aligned Prospect Hill Boulevard" will be constructed. Final determination of the exact location of Re-aligned Prospect Hill Boulevard and the associated intersections to be determined based upon coordination with the High School and the Department of Highways.

Per the Huntfield proffers, "Huntfield has proffered to produce a transportation study and plan which indicates how the development of road improvements, a hike/biker trail, shuttle routes, a potential commuter train/bus station, and other transportation improvement could minimize the impacts of additional vehicle traffic, attributable to the Huntfield project, in the Charles Town Area". A phasing plan will be submitted to the City of Charles Town with future site plans for informative purposes. The phasing plan will include trigger points at which action regarding the transportation plan will be taken.

TYPICAL SECTION
RAILROAD BERM

NOTE: BERM SECTION SHOWN IS APPROXIMATE. ACTUAL BERM DESIGN AND LOCATION TO BE DETERMINED WITH FUTURE SITE PLANS.

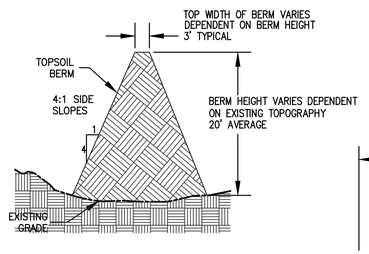

TYPICAL SECTION
SECONDARY STREETS

FOR ILLUSTRATIVE PURPOSES ONLY

FINAL SECTION DETAILS TO BE APPROVED DURING SITE PLAN REVIEW
NOT TO SCALE

NOTE:
1) APPLICABLE TO ALL SECONDARY STREETS WITHIN THE HUNTFIELD DEVELOPMENT.

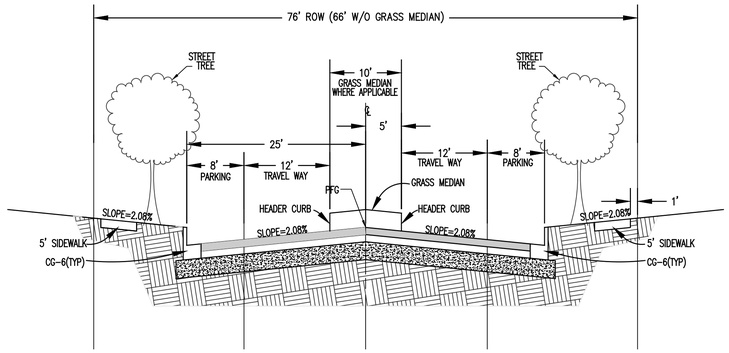

TYPICAL SECTION
SECONDARY STREETS

FOR ILLUSTRATIVE PURPOSES ONLY

FINAL SECTION DETAILS TO BE APPROVED DURING SITE PLAN REVIEW
NOT TO SCALE

NOTE:
1) APPLICABLE TO ALL SECONDARY STREETS WITHIN THE HUNTFIELD DEVELOPMENT.

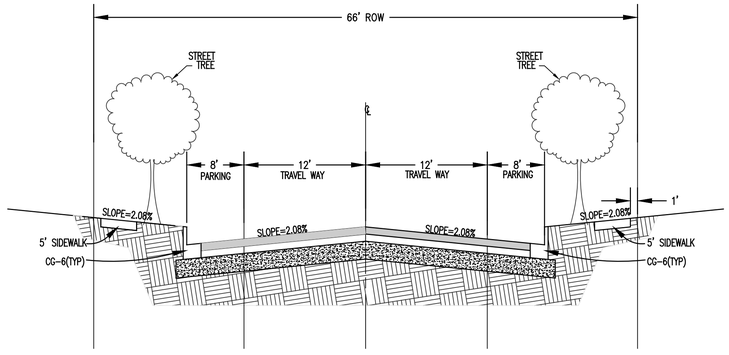

TYPICAL SECTION
PRIMARY STREET

FOR ILLUSTRATIVE PURPOSES ONLY

FINAL SECTION DETAILS TO BE APPROVED DURING SITE PLAN REVIEW
NOT TO SCALE

NOTE: APPLICABLE TO ALL SECONDARY STREETS WITHIN THE HUNTFIELD DEVELOPMENT.

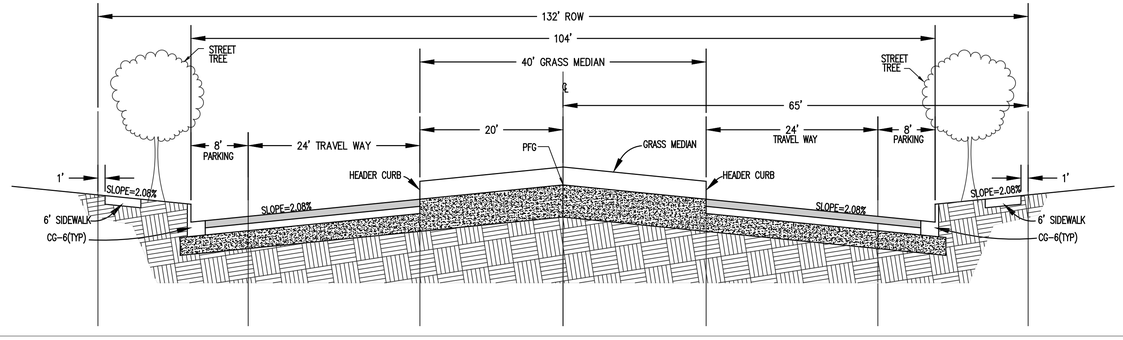

MORRIS & RITCHIE ASSOCIATES, INC.
ENGINEERS, PLANNERS, SURVEYORS AND LANDSCAPE ARCHITECTS
205 E. HIRST ROAD, SUITE 106
PURCELLVILLE, VA 20132
PHONE: (703) 994 - 4047
MRAGTA.COM

Copyright 2024 Morris & Ritchie Associates, Inc.

REVISIONS | DATE

STATUS & TYPICAL ROAD SECTIONS

HUNTFIELD
OVERALL COMPOSITE SCHEMATIC
CITY OF CHARLES TOWN
JEFFERSON COUNTY, WEST VIRGINIA

JOB NO.: 22976
SCALE:
DATE: 02/04/25
DRAWN BY: CDS
DESIGN BY: CDS
REVIEW BY: TDH
SHEET: 2 OF 6

L:\Projects\Huntfield\Engineering\Master Development Plan\SHEETS\02o.dwg, 2/4/2025 4:26:02 PM, CStephenson, 1:1, Copyright 2025 Morris & Ritchie Associates, Inc.



LEGEND

ROADS
- PRIMARY (132' ROW)
- SECONDARY (76' & 66' ROW)
- TERTIARY (56' & 50' ROW)

OPEN SPACE
- GENERAL
- TREE SAVE
- SCHOOL SITE OPEN SPACE

NEIGHBORHOOD RESIDENTIAL
- SINGLE FAMILY
- SINGLE FAMILY (ACTIVE ADULT COMMUNITY)
- TOWN HOMES
- TOWN HOME REGION
- MULTI-FAMILY
- ACTIVE COMMUNITY CENTER
- MUNICIPAL USE

- COMMERCIAL
- COMMERCIAL (VILLAGE CENTER)
- SCHOOL SITE

- FLOOD PLAIN
- WETLAND AREA
- SW= SIDEWALK
- EXISTING ROADS
- HUNTFIELD BOUNDARY

TOTAL SITE AREA 998.8 ACRES

DATE	REVISIONS

MORRIS & RITCHIE ASSOCIATES, INC.
ENGINEERS, PLANNERS, SURVEYORS AND LANDSCAPE ARCHITECTS
205 E. FIRST ROAD, SUITE 106
PLYMOUTH MEETING, PA 19462
PHONE: (610) 994 - 0047
MRAGTA.COM

Copyright 2024 Morris & Ritchie Associates, Inc.

CIRCULATION & OPEN SPACE

HUNTFIELD
OVERALL COMPOSITE SCHEMATIC
CITY OF CHARLES TOWN
JEFFERSON COUNTY, WEST VIRGINIA

JOB NO.:	22976
SCALE:	
DATE:	02/04/25
DRAWN BY:	CDS
DESIGN BY:	CDS
REVIEW BY:	TDH
SHEET:	3 OF 6

PARCELS AFFECTED BY THIS SCHEMATIC

DIST.	MAP	PARCEL	LOT	REFERENCE DB/PG	ZONING
CTC	11A	1	1	973/335	NR
CTC	11A	2	2	983/357	NR
CTC	11A	3	3	976/549	NR
CTC	11A	4	4	966/353	NR
CTC	11A	5	5	966/353	NR
CTC	11A	6	6	976/351	NR
CTC	11A	7	7	976/288	NR
CTC	11A	8	8	986/738	NR
CTC	11A	9	9	984/39	NR
CTC	11A	10	10	990/243	NR
CTC	11A	11	11	979/8	NR
CTC	11A	12	12	984/37	NR
CTC	11A	13	13	970/615	NR
CTC	11A	14	14	983/408	NR
CTC	11A	15	15	993/697	NR
CTC	11A	16	16	984/89	NR
CTC	11A	17	17	985/481	NR
CTC	11A	18	18	982/361	NR
CTC	11A	19	19	970/615	NR
CTC	11A	20	20	949/203	NR
CTC	11A	21	21	996/207	NR
CTC	11A	22	22	991/566	NR
CTC	11A	23	23	989/725	NR
CTC	11A	24	24	993/257	NR
CTC	11A	25	25	983/284	NR
CTC	11A	26	26	979/395	NR
CTC	11A	27	27	979/602	NR
CTC	11A	28	28	983/690	NR
CTC	11A	29	29	987/405	NR
CTC	11A	30	30	985/719	NR
CTC	11A	31	31	986/82	NR
CTC	11A	32	32	985/187	NR
CTC	11A	33	33	985/189	NR
CTC	11A	34	34	985/150	NR
CTC	11A	35	35	989/639	NR
CTC	11A	36	36	988/599	NR
CTC	11A	37	37	992/533	NR
CTC	11A	38	38	949/203	NR
CTC	11A	39	39	988/418	NR
CTC	11A	40	40	949/203	NR
CTC	11A	41	41	985/156	NR
CTC	11A	42	42	983/683	NR
CTC	11A	43	43	986/80	NR
CTC	11A	44	44	984/81	NR
CTC	11A	45	45	972/613	NR
CTC	11A	46	46	972/613	NR
CTC	11A	47	47	984/85	NR
CTC	11A	48	48	982/524	NR
CTC	11A	49	49	982/682	NR
CTC	11A	50	50	982/635	NR
CTC	11A	51	51	981/531	NR
CTC	11A	52	52	982/234	NR
CTC	11A	53	53	994/15	NR
CTC	11A	54	54	949/203	NR
CTC	11A	55	55	995/48	NR
CTC	11A	56	56	997/536	NR
CTC	11A	57	57	987/63	NR
CTC	11A	58	58	987/14	NR
CTC	11A	59	59	987/184	NR
CTC	11A	60	60	988/585	NR
CTC	11A	61	61	989/59	NR
CTC	11A	62	62	989/57	NR
CTC	11A	63	63	949/203	NR
CTC	11A	64	64	990/539	NR
CTC	11A	65	65	990/539	NR
CTC	11A	66	66	990/539	NR
CTC	11A	67	67	982/147	NR
CTC	11A	68	68	979/466	NR
CTC	11A	69	69	995/569	NR
CTC	11A	69A	69A	949/203	NR
CTC	11A	70	70	994/506	NR
CTC	11A	70A	70A	996/242	NR
CTC	11A	71	71	949/203	NR
CTC	11A	71A	71A	994/15	NR
CTC	11A	72	72	997/526	NR
CTC	11A	72A	72A	995/203	NR
CTC	11A	73	73	995/484	NR
CTC	11A	74	74	994/504	NR
CTC	11A	75	75	996/544	NR
CTC	11A	76	76	986/180	NR
CTC	11A	77	77	995/108	NR
CTC	11A	78	78	998/153	NR
CTC	11A	78A	78A	997/690	NR
CTC	11A	79	79	994/15	NR
CTC	11A	79A	79A	998/151	NR
CTC	11A	80	80	997/558	NR
CTC	11A	80A	80A	997/613	NR
CTC	11A	81	81	994/15	NR
CTC	11A	82	82	998/149	NR
CTC	11A	83	83	997/566	NR
CTC	11A	84	84	989/31	NR
CTC	11A	85	85	989/31	NR
CTC	11A	86	86	990/539	NR
CTC	11A	87	87	989/31	NR
CTC	11A	88	88	986/78	NR
CTC	11A	89	89	977/292	NR
CTC	11A	90	90	993/491	NR
CTC	11A	91	91	985/55	NR
CTC	11A	92	92	975/255	NR
CTC	11A	93	93	971/529	NR
CTC	11A	94	94	973/521	NR
CTC	11A	95	95	979/10	NR
CTC	11A	96	96	974/340	NR
CTC	11A	97	97	996/19	NR
CTC	11A	98	98	974/670	NR
CTC	11A	99	99	981/332	NR
CTC	11A	100	100	980/682	NR
CTC	11A	101	101	981/278	NR
CTC	11A	102	102	985/226	NR
CTC	11A	103	103	986/304	NR
CTC	11A	104	104	986/137	NR
CTC	11A	105	105	988/595	NR
CTC	11A	106	106	989/12	NR
CTC	11A	107	107	988/593	NR
CTC	11A	108	108	949/203	NR
CTC	11A	109	109	949/203	NR
CTC	11A	109A	109A	994/15	NR
CTC	11A	110	110	949/203	NR
CTC	11A	111	111	949/203	NR
CTC	11A	111A	111A	994/15	NR
CTC	11A	112	112	980/476	NR
CTC	11A	113	113	980/592	NR
CTC	11A	PARK	D+E	949/203	NR
CTC	11A	COM1	C	949/203	NR
CTC	11A	COM2	F	949/203	NR
CTC	11A	CMR1	A	949/203	NR
CTC	11A	CMR2	B	949/203	NR

DIST.	MAP	PARCEL	LOT	REFERENCE DB/PG	ZONING
CTC	11A	114	114		NR
CTC	11A	115	115		NR
CTC	11A	116	116		NR
CTC	11A	117	117		NR
CTC	11A	118	118		NR
CTC	11A	119	119		NR
CTC	11A	120	120		NR
CTC	11A	121	121		NR
CTC	11A	122	122		NR
CTC	11A	123	123		NR
CTC	11A	124	124		NR
CTC	11A	125	125		NR
CTC	11A	126	126		NR
CTC	11A	127	127		NR
CTC	11A	128	128		NR
CTC	11A	129	129		NR
CTC	11A	130	130		NR
CTC	11A	131	131		NR
CTC	11A	132	132		NR
CTC	11A	133	133		NR
CTC	11A	134	134		NR
CTC	11A	135	135		NR
CTC	11A	136	136		NR
CTC	11A	137	137		NR
CTC	11A	138	138		NR
CTC	11A	139	139		NR
CTC	11A	140	140		NR
CTC	11A	141	141		NR
CTC	11A	142	142		NR
CTC	11A	143	143		NR
CTC	11A	144	144		NR
CTC	11A	145	145		NR
CTC	11A	146	146		NR
CTC	11A	147	147		NR
CTC	11A	148	148		NR
CTC	11A	149	149		NR
CTC	11A	150	150		NR
CTC	11A	151	151		NR
CTC	11A	152	152		NR
CTC	11A	153	153		NR
CTC	11A	154	154		NR
CTC	11A	155	155		NR
CTC	11A	156	156		NR
CTC	11A	157	157		NR
CTC	11A	158	158		NR
CTC	11A	159	159		NR
CTC	11A	160	160		NR
CTC	11A	161	161		NR
CTC	11A	162	162		NR
CTC	11A	163	163		NR
CTC	11A	164	164		NR
CTC	11A	165	165		NR
CTC	11A	166	166		NR
CTC	11A	167	167		NR
CTC	11A	168	168		NR
CTC	11A	169	169		NR
CTC	11A	170	170		NR
CTC	11A	171	171		NR
CTC	11A	172	172		NR
CTC	11A	173	173		NR
CTC	11A	174	174		NR
CTC	11A	175	175		NR
CTC	11A	176	176		NR
CTC	11A	177	177		NR
CTC	11A	178	178		NR
CTC	11A	179	179		NR
CTC	11A	180	180		NR
CTC	11A	181	181		NR
CTC	11A	182	182		NR
CTC	11A	183	183		NR
CTC	11A	184	184		NR
CTC	11A	185	185		NR
CTC	11A	186	186		NR
CTC	11A	187	187		NR
CTC	11A	188	188		NR
CTC	11A	189	189		NR
CTC	11A	190	190		NR
CTC	11A	COM	2A		NR
CTC	11A	PARK	2B		NR
CTC	11A	PARK	2C		NR
CTC	11A	191	191		NR
CTC	11A	192	192		NR
CTC	11A	193	193		NR
CTC	11A	194	194		NR
CTC	11A	195	195		NR
CTC	11A	196	196		NR
CTC	11A	197	197		NR
CTC	11A	198	198		NR
CTC	11A	199	199		NR
CTC	11A	200	200		NR
CTC	11A	201	201		NR
CTC	11A	202	202		NR
CTC	11A	203	203		NR
CTC	11A	204	204		NR
CTC	11A	205	205		NR
CTC	11A	206	206		NR
CTC	11A	207	207		NR
CTC	11A	208	208		NR
CTC	11A	209	209		NR
CTC	11A	210	210		NR
CTC	11A	211	211		NR
CTC	11A	212	212		NR
CTC	11A	213	213		NR
CTC	11A	214	214		NR
CTC	11A	215	215		NR
CTC	11A	216	216		NR
CTC	11A	217	217		NR
CTC	11A	218	218		NR
CTC	11A	219	219		NR
CTC	11A	220	220		NR
CTC	11A	221	221		NR
CTC	11A	222	222		NR
CTC	11A	223	223		NR
CTC	11A	224	224		NR
CTC	11A	225	225		NR
CTC	11A	226	226		NR
CTC	11A	227	227		NR
CTC	11A	228	228		NR
CTC	11A	229	229		NR
CTC	11A	230	230		NR
CTC	11A	231	231		NR
CTC	11A	232	232		NR
CTC	11A	233	233		NR

PARCELS AFFECTED BY THIS SCHEMATIC

DIST.	MAP	PARCEL	LOT	REFERENCE DB/PG	ZONING
CTC	11A	234	234		NR
CTC	11A	235	235		NR
CTC	11A	236	236		NR
CTC	11A	237	237		NR
CTC	11A	238	238		NR
CTC	11A	239	239		NR
CTC	11A	240	240		NR
CTC	11A	241	241		NR
CTC	11A	242	242		NR
CTC	11A	243	243		NR
CTC	11A	243	243		NR
CTC	11A	244	244		NR
CTC	11A	262	262		NR
CTC	11A	263	263		NR
CTC	11A	264	264		NR
CTC	11A	265	265		NR
CTC	11A	PARK	2D		NR
CTC	11A	PARK	2F		NR
CTC	11A	379	379		NR
CTC	11A	380	380		NR
CTC	11A	381	381		NR
CTC	11A	382	382		NR
CTC	11A	383	383		NR
CTC	11A	384	384		NR
CTC	11A	385	385		NR
CTC	11A	386	386		NR

DIST.	MAP	PARCEL	LOT	REFERENCE DB/PG	ZONING
CTC	11A	387	387		NR
CTC	11A	388	388		NR
CTC	11A	389	389		NR
CTC	11A	390	390		NR
CTC	11A	391	391		NR
CTC	11A	392	392		NR
CTC	11A	393	393		NR
CTC	11A	394	394		NR
CTC	11A	395	395		NR
CTC	11A	396	396		NR
CTC	11A	397	397		NR
CTC	11A	398	398		NR
CTC	11A	399	399		NR
CTC	11A	400	400		NR
CTC	11A	401	401		NR
CTC	11A	402	402		NR
CTC	11A	403	403		NR
CTC	11A	404	404		NR
CTC	11A	405	405		NR
CTC	11A	406	406		NR
CTC	11A	407	407		NR
CTC	11A	408	408		NR
CTC	11A	409	409		NR
CTC	11A	410	410		NR
CTC	11A	411	411		NR
CTC	11A	412	412		NR

DIST.	MAP	PARCEL	LOT	REFERENCE DB/PG	ZONING
CTC	11A	413	413		NR
CTC	11A	414	414		NR
CTC	11A	415	415		NR
CTC	11A	416	416		NR
CTC	11A	417	417		NR
CTC	11A	418	418		NR
CTC	11A	419	419		NR
CTC	11A	420	420		NR
CTC	11A	421	421		NR
CTC	11A	422	422		NR
CTC	11A	423	423		NR
CTC	11A	424	424		NR
CTC	11A	425	425		NR
CTC	11A	426	426		NR
CTC	11A	427	427		NR
CTC	11A	428	428		NR
CTC	11A	429	429		NR
CTC	11A	430	430		NR
CTC	11A	431	431		NR
CTC	11A	432	432		NR
CTC	11A	433	433		NR
CTC	11A	434	434		NR
CTC	11A	435	435		NR
CTC	11A	436	436		NR
CTC	11A	437	437		NR
CTC	11A	438	438		NR
CTC	11A	439	439		NR
CTC	11A	440	440		NR
CTC	11A	441	441		NR
CTC	11A	442	442		NR
CTC	11A	443	443		NR
CTC	11A	444	444		NR
CTC	11A	445	445		NR
CTC	11A	446	446		NR
CTC	11A	447	447		NR
CTC	11A	448	448		NR
CTC	11A	449	449		NR
CTC	11A	450	450		NR
CTC	11A	451	451		NR
CTC	11A	452	452		NR
CTC	11A	453	453		NR
CTC	11A	454	454		NR
CTC	11A	455	455		NR
CTC	11A	456	456		NR
CTC	11A	457	457		NR
CTC	11A	458	458		NR
CTC	11A	459	459		NR
CTC	11A	460	460		NR
CTC	11A	461	461		NR
CTC	11A	462	462		NR
CTC	11A	463	463		NR
CTC	11A	464	464		NR
CTC	11A	465	465		NR
CTC	11A	466	466		NR
CTC	11A	PARK	1		NR
CTC	11A	PARK	2		NR
CTC	11A	PARK	3		NR

GRAPHIC SCALE

400 0 200 400 800 1600

(IN FEET)
1 inch = 400 ft.

SITE AREA (PARCEL 2)
DB 949 PG 203
TAX MAP 11, PARCEL 2
481.252 ACRES

SITE AREA (PARCEL 2)
517.59 ACRES
DB 949 PG 203
TAX MAP 11, PARCEL 1

LOCUST DRIVE
SHENANDOAH DEVELOPMENT CORP.
TUSCARILLON DRIVE
OAKMONT DRIVE
LOCUST HILL LLC
WV ROUTE 13
SUMMIT POINT ROAD
HAMILTON
WASHINGTON
JEFFERSON
MADISON
MONROE
JACKSON
HARRISON
SEVENTH DAY ADVENTIST CHURCH
O'DONNELL
DENSLOW
MCWILLIAMS
LOCATION OF SINK HOLE SIGNS
MITIGATION OF SINK HOLES TO BE IN ACCORDANCE WITH RECOMMENDATIONS FROM GEOTECHNICAL ENGINEERS
CLAYMONT
CLAYMONT SOCIETY FOR CONTINUOUS EDUCATION, INC.
AGRICULTURAL
WINCHESTER COLD STORAGE CO., INC.
NORFOLK & SOUTHERN RAILROAD 66' WIDE RIGHT OF WAY
EX. RAILROAD
200' OPEN SPACE
LAND N/F OF WILLIAM P.C. PERRY EST.
UNNAMED TRIBUTARY OF BULLSKIN RUN
EXISTING PHASE 3B
EXISTING PHASE 3A
EXISTING PHASE 2B
EXISTING PHASE 2A
EXISTING PHASE 1
SWM
SWM / BMP
ELEMENTARY SCHOOL
LAND N/F OF BOARD OF EDUCATION JEFFERSON CTY.
CEMETARY of GIBSONTOWN
FEMA FLOOD PLAIN ZONE 'A' PER "FIRM #5400650050 C" DATED AUG. 2, 1993
EXISTING WETLANDS
SMITH
BROOKER
CLABAUGH
GRIMES
CAVE ROAD
FURIOSO
JEHOVAHS WITNESSES (CHURCH)
CHICCHIRICHI
AUGUSTINE AVE.
SPRUCE HILL LLC
HERTELENDY
EVENTS PARKING
BALL FIELDS
LOCATION OF SINK HOLE SIGN
MITIGATION OF SINK HOLES TO BE IN ACCORDANCE WITH RECOMMENDATIONS FROM GEOTECHNICAL ENGINEERS
BECKHARD
HIGH SCHOOL
HUYETT ROAD
WV ROUTE 13/3 HUYETT ROAD
CHARLES TOWN BYPASS
US ROUTE 340 TO BERKELEY

PREVIOUSLY APPROVED SCHEMATICS

SCHEMATICS PREVIOUSLY APPROVED AS "FUTURE DEVELOPMENT"

CURRENT SCHEMATICS

PHASE BOUNDARY
Note: Phase boundaries shown correspond to phase boundaries of site plans previously approved. (See Sheet 6 for new Phase Limits)

EXISTING TREES (WITHIN SITE LIMITS)

MORRIS & RITCHIE ASSOCIATES, INC.
ENGINEERS, PLANNERS, SURVEYORS AND LANDSCAPE ARCHITECTS
205 E. FIRST ROAD, SUITE 106
PLYMOUTH MEETING, PA 19462
PHONE: (703) 994-0047
MRAGTA.COM

Copyright 2024 Morris & Ritchie Associates, Inc.

DATE	REVISIONS

OVERALL SCHEMATIC COMPARISON, EXISTING TOPOGRAPHY & ENVIRONMENTAL FEATURES

HUNTFIELD

OVERALL COMPOSITE SCHEMATIC

CITY OF CHARLES TOWN
JEFFERSON COUNTY, WEST VIRGINIA

JOB NO.: 22976
SCALE:
DATE: 02/04/25
DRAWN BY: CDS
DESIGN BY: CDS
REVIEW BY: TDH
SHEET: 4 OF 6

L:\Projects\Huntfield\Engineering\Master Development Plan\SHEETS\04.dwg, 2/4/2025 2:10:03 PM, CStephenson, 1:1, Copyright 2025 Morris & Ritchie Associates, Inc.

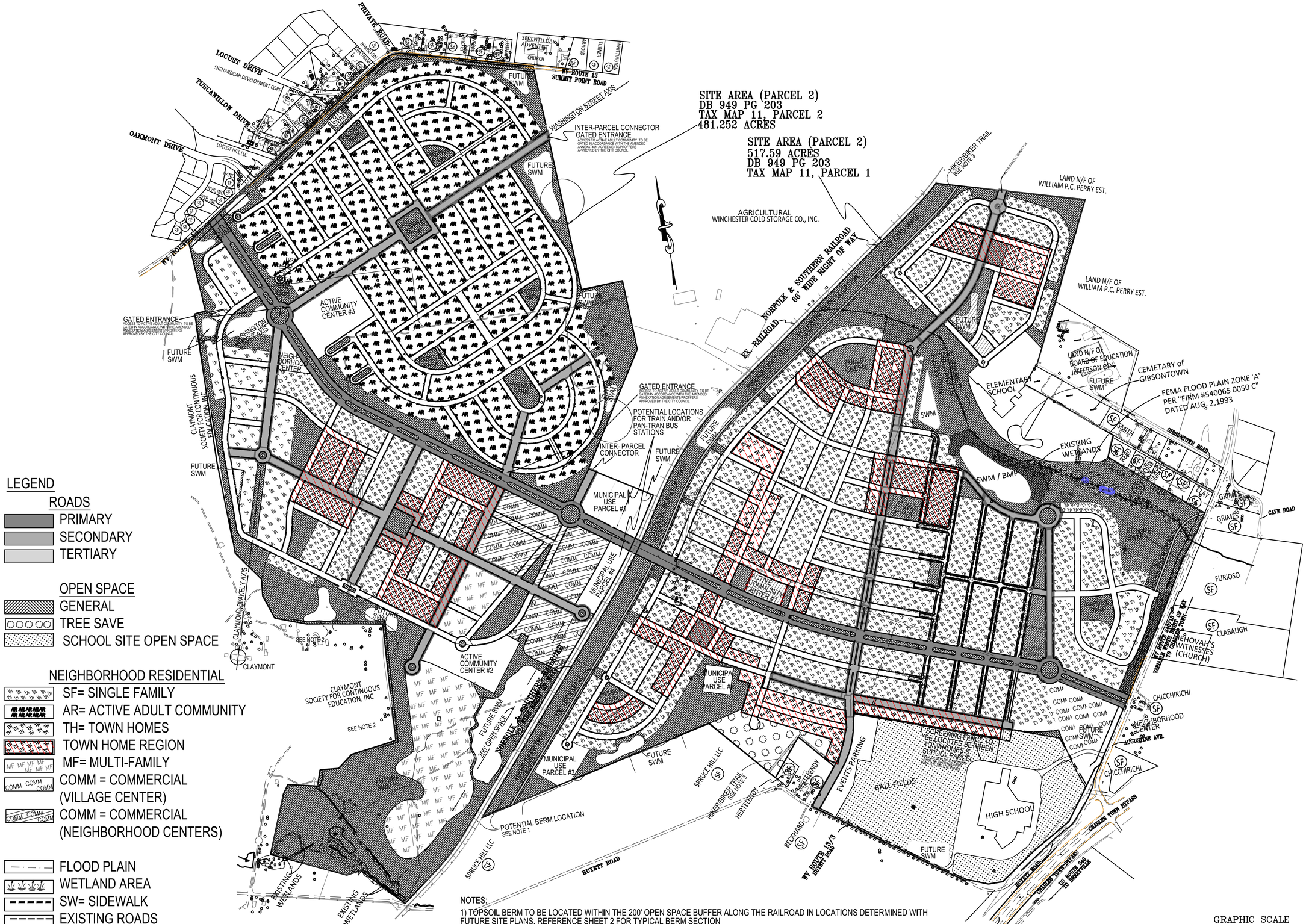

LEGEND

ROADS
- PRIMARY
- SECONDARY
- TERTIARY

OPEN SPACE
- GENERAL
- TREE SAVE
- SCHOOL SITE OPEN SPACE

NEIGHBORHOOD RESIDENTIAL
- SF= SINGLE FAMILY
- AR= ACTIVE ADULT COMMUNITY
- TH= TOWN HOMES
- TOWN HOME REGION
- MF= MULTI-FAMILY
- COMM = COMMERCIAL (VILLAGE CENTER)
- COMM = COMMERCIAL (NEIGHBORHOOD CENTERS)

- FLOOD PLAIN
- WETLAND AREA
- SW= SIDEWALK
- EXISTING ROADS
- HUNTFIELD BOUNDARY

TOTAL SITE AREA 998.8 ACRES

NOTES:

1) TOPSOIL BERM TO BE LOCATED WITHIN THE 200' OPEN SPACE BUFFER ALONG THE RAILROAD IN LOCATIONS DETERMINED WITH FUTURE SITE PLANS. REFERENCE SHEET 2 FOR TYPICAL BERM SECTION

2) A SEPARATE LANDSCAPE PLAN DETAILING THE PROPOSED BUFFERING BETWEEN THE HUNTFIELD/CLAYMONT BOUNDARY SHALL BE PROVIDED TO THE PLANNING COMMISSION FOR INFORMATIVE PURPOSES

3) APPROXIMATE LOCATION OF HIKER/BIKER TRAIL. FINAL LOCATION TO BE DETERMINED WITH FUTURE SITE PLANS & COORDINATED WITH TRAILS ON ADJOINER PARCELS.

MORRIS & RITCHIE ASSOCIATES, INC.
ENGINEERS, PLANNERS, SURVEYORS AND LANDSCAPE ARCHITECTS
205 E. FIRST ROAD, SUITE 106
PURCELLVILLE, VA 20132
PHONE: (703) 994 - 4047
MRAGTA.COM

DATE	REVISIONS

Copyright 2024 Morris & Ritchie Associates, Inc.

OVERALL SITE CONDITIONS

HUNTFIELD
OVERALL COMPOSITE SCHEMATIC
CITY OF CHARLES TOWN
JEFFERSON COUNTY, WEST VIRGINIA

JOB NO.:	22976
SCALE:	
DATE:	02/04/25
DRAWN BY:	CDS
DESIGN BY:	CDS
REVIEW BY:	TDH
SHEET:	5 OF 6

PHASING LIMITS EXHIBIT

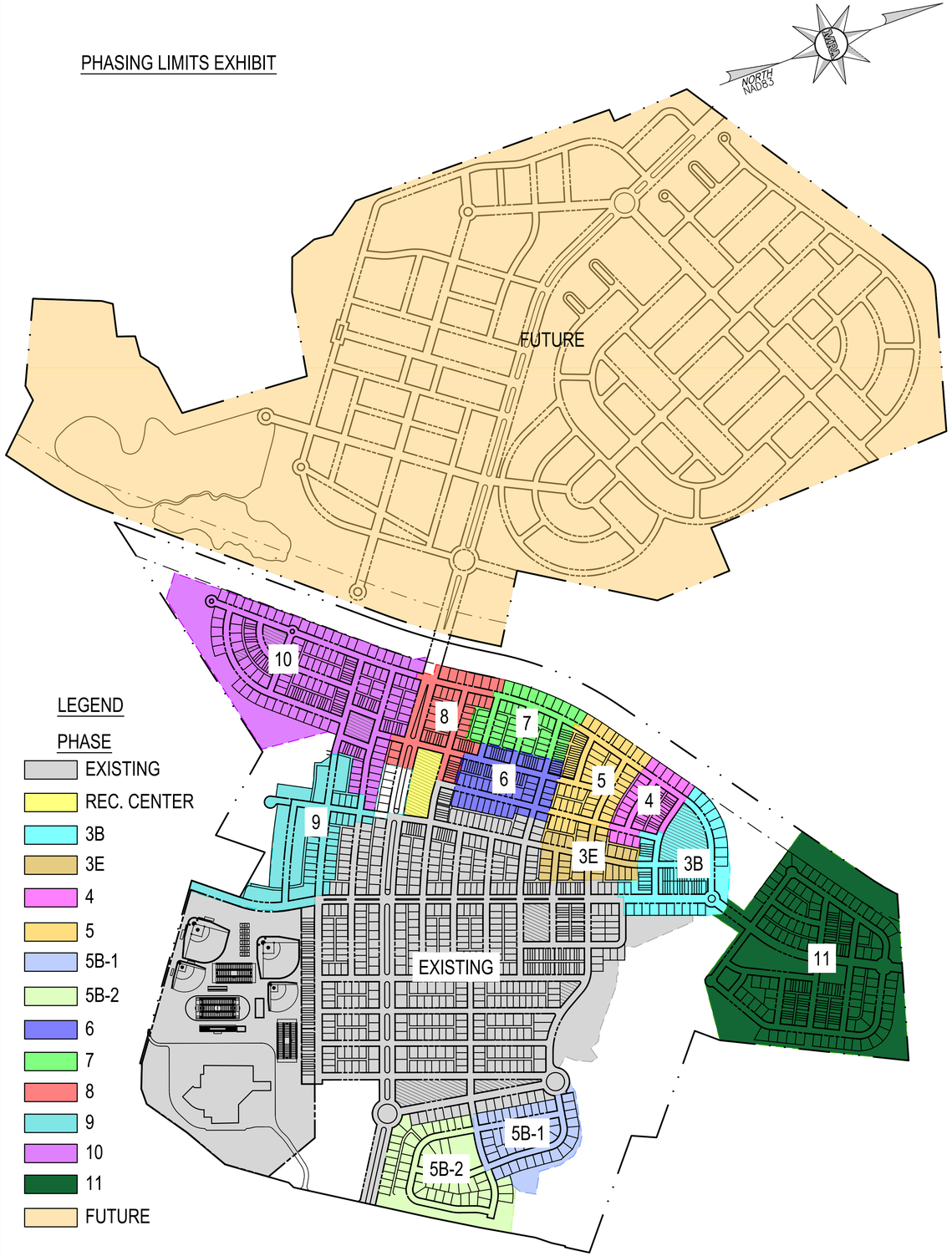

NOTES:

THE PHASING LIMITS ARE BASED ON THE CURRENT DEVELOPMENT PLAN AS OF 2025 AND ARE PROVIDED FOR GRAPHICAL PURPOSES ONLY. THE NUMBERING AND LOCATIONS OF THE PHASES DEPICTED MAY CHANGE AND ARE SUBJECT TO REVISIONS AS NECESSARY.

500 0 500 1000 1500
Scale 1" = 500'

PROFFER ZONE EXHIBIT

(SEE PROFFER AMENDMENT DATE 1/4/24)

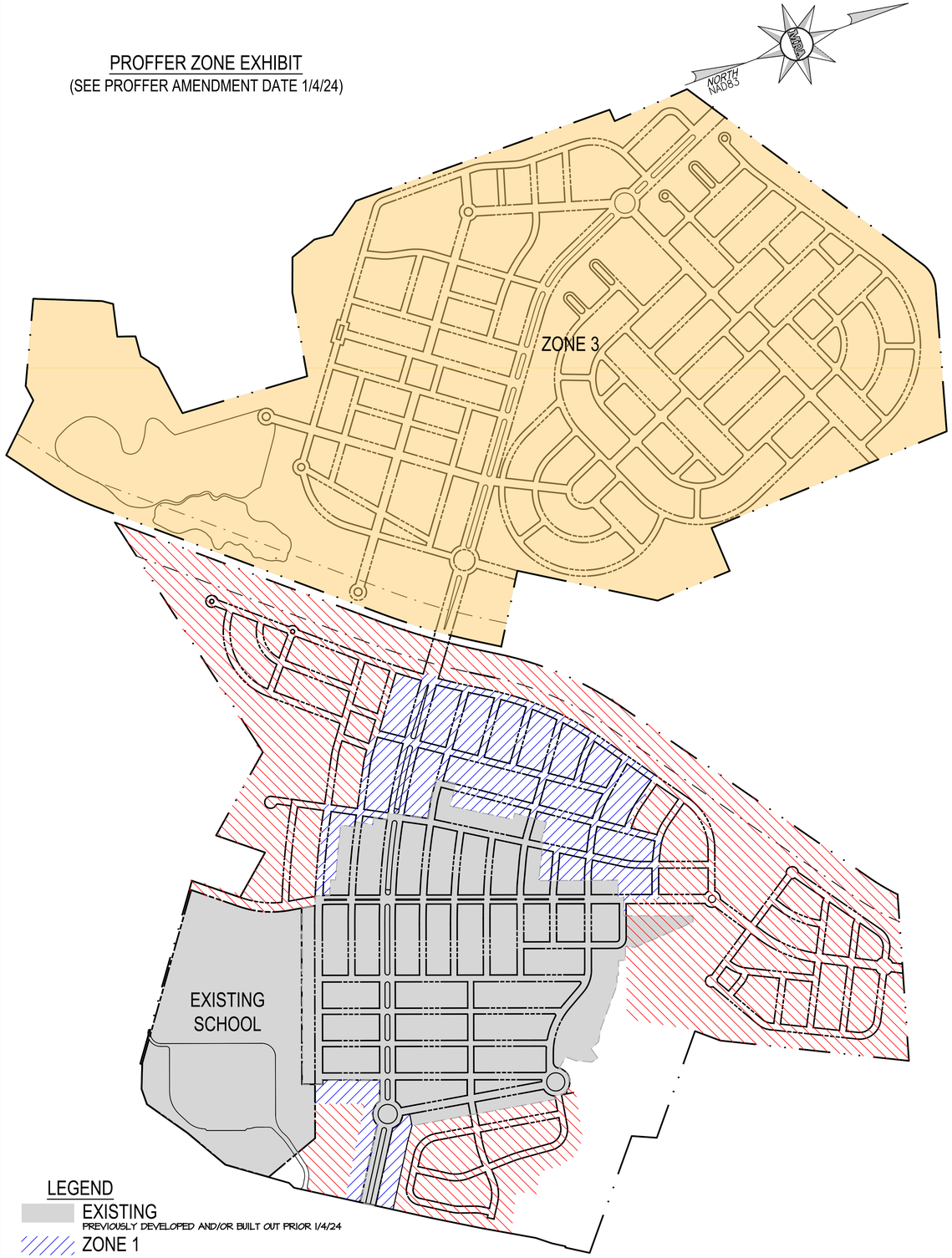

500 0 500 1000 1500
Scale 1" = 500'

MORRIS & RITCHIE ASSOCIATES, INC.
ENGINEERS, PLANNERS, SURVEYORS AND LANDSCAPE ARCHITECTS
205 E. FIRST ROAD, SUITE 106
PURCELLVILLE, VA 20132
PHONE: (703) 994 - 4047
MRAGTA.COM

Copyright 2024 Morris & Ritchie Associates, Inc.

DATE	REVISIONS

PHASING & PROFFER EXHIBIT

HUNTFIELD
OVERALL COMPOSITE SCHEMATIC
CITY OF CHARLES TOWN
JEFFERSON COUNTY, WEST VIRGINIA

JOB NO.: 22976
SCALE:
DATE: 02/04/25
DRAWN BY: CDS
DESIGN BY: CDS
REVIEW BY: TDH
SHEET: 6 OF 6

Huntfield

Amended Schematic Plan &
Overall Composite Schematic Narrative
(Date: 3/18/25)

The Huntfield Development dates to 2002 and has gone through two different Proffer Amendments (2004 & 2024). Over that period, The City of Charles Town has approved (7) Site Plans, (2) Site Plan Amendments, (7) Record Plats, (2) Record Plat Amendments. The purpose of this narrative is to summarize the changes from the approved Schematic Plan last updated in the 2005.

The Amended Schematic Plan dated, February 2025, is also referred to as the Master Development Plan. This plan reconciles the Master Development Plan, with the approved Site Plans, Record Plats and Construction Plans from the past 20 years. Overall, the revisions to the Master Development are generally minor in nature and are limited to the land bays areas east of the railroad. The density remained unchanged, and there have been limited adjustments to road network. The typical road sections reflect all the various configurations based on the approved construction plans. The existing condition that depicts the access point to Washington High School and to Land Bay 5B now match the approved construction plans. The Huntfield East Lot Matrix Exhibit identifying Zones 1-3 as modified on 1/4/2024 by The City of Charles Town has been included along with a Phasing Limits Exhibit both of which were not include the previous versions of the Schematic Plan.

The state of the housing market, along with current development and building costs, has created the need to offer multiple product types for different levels of homebuyers. The intent of this plan change is to offer multiple product types in all phases of site development and to avoid only offering one product for multiple consecutive phases. Taking into account existing homes and existing proffers we feel we can achieve multiple products in each phase all while encompassing existing homes with a buffer of no changes. The proposed changes allow for rear-loaded townhomes as well as rear-loaded single family dwellings to be offered in all phases. The areas converted to townhomes are a continuation of existing townhome areas that flow seamlessly by keeping the pattern of townhomes facing townhomes and single families facing single families.

Sheet by Sheet revision Summary:

Sheet #1 Coversheet & Narrative

- Updates to: Owner / Developer, Title Blocks & associated project list

Sheet #2 Status & Typical Road Sections

- Reorganized the sheet layout and added road sections that matched existing conditions.

Sheet #3 Circulation & Open Space

- Reconciled road network and land bay uses to match existing conditions

Sheet #4 Schematic Comparison

- Updated underlying road network & land bays to match existing conditions

Sheet #5 Overall Site Conditions

- Reconciled road network and land bay uses to match existing conditions

Sheet #6 Phasing & Proffer Exhibits

- New Sheet to show the new Phasing limit and Proffer Zone E

From: [redacted]
To: James Newman
Subject: Master Plan
Date: Sunday, February 8, 2026 7:33:23 PM

To whom this may concern,

In regard to DRB trying to make changes to the master plan, we are completely against it. As someone who lives on Colonial Dr., it is hard to imagine how this could be feasible especially considering the parking situation. The side of Colonial Drive that we live on has “no parking” and the opposing side is essentially full of street parking all the time, this side leaves us with no parking for visitors or teen drivers or anyone else living in the house. Frequently the field behind the alley is used because there is no other option. Let’s face it, we want to be cordial with our neighbors but frequently the neighbors across the street feel like the street parking belongs to them because it is on “their side” of colonial drive and in front of their house. While yes you will be lining your pockets with more money with the town homes, you are creating the perfect storm for unhappy residents of this neighborhood. It just proves you really are a builder with no thought or care for the people moving in; you clearly have no intention of creating a community this truly is just all about profit for DRB. DRB could also not live up to the demands of the most recent snow storm, clearing the streets took days and some alleys, such as the one behind colonial drive was never properly cleared. More homes with more streets for DRB/HOA to take care of just doesn’t seem possible when already the demand cannot be met. Now throw in the lack of parking and where can people go with their vehicles? This area is widely known for people who have to commute to work and most homes have multiple vehicles per house.

My question is where do you expect the people of colonial drive, who do not have street parking, to park? We rely on this field behind the house and if a wider street in the alley way is not incorporated there is no where to park other than of course the 2 car garage but in an actual community there should he street parking or some sort of close parking for others of the home to park. That’s what this is supposed to be, correct? A community? For families and friends to host and people to come over? There should be ample space on both sides of the streets and this needs to be taken into consideration.

Best,

Williams’s
Beware - This email comes from outside the City of Charles Town.

From: [redacted]
To: James Newman; Jess Derr; ann paonessa
Subject: Opposition to Proposed Master Plan Changes for Huntfield Community
Date: Monday, February 9, 2026 1:48:00 PM

Dear Members of the Charles Town Planning Commission and Mr. Newman,

I am writing to express my strong opposition to the Master Plan modifications requested by DR Acquisitions for the Huntfield community. As a resident since September 2003 and a former Charles Town Council member (2005-2009), I have both personal investment in and institutional knowledge of this development's original vision and promises.

The proposed changes—converting single-family homes to townhomes in Phases 2D and 3F, plus "swapping the location of some units" in Phase 4—represent a fundamental departure from the community we were presented and the quality of life we chose when we made Huntfield our home.

My primary concerns are:

Parking Crisis: Our community already struggles with inadequate parking. Adding 70 townhomes will exponentially worsen this problem, creating safety hazards, resident frustration, and overflow parking that will strain our streets. This latest snow event has made this quite clear.

Disappearing Green Space: The original plan included parks and green areas that foster community connection and provide residents with outdoor spaces to enjoy. These proposed density increases will further erode the limited recreational space we have, fundamentally changing the character of our neighborhood.

Failing Infrastructure: Our existing infrastructure is already showing strain. Water pressure has deteriorated noticeably over the years. Our roads were not designed for this level of density. Internet bandwidth struggles to meet current demand. Adding 70 more units without corresponding infrastructure improvements is irresponsible planning that will diminish livability for all residents.

I understand growth is inevitable, but it must be responsible, sustainable, and honor the commitments made to those of us who invested our lives here based on specific promises about what Huntfield would be.

I urge the Planning Commission to deny these requested modifications and hold DR Acquisitions accountable to the original Master Plan that balanced growth with quality of life.

Thank you for your consideration and for your service to our community.

Respectfully,

Amy Schmitt
15 Colston Road
Charles Town, WV

From: Victoria Struss
To: James Newman
Subject: Meeting tonight
Date: Tuesday, February 10, 2026 11:27:37 AM

Good evening, council. I am unable to attend the meeting, as I have two young kids. But I want to thank you for the opportunity for this to be read tonight.

My name is Victoria, and I am a resident of the Huntfield community. I am here to express my concern about the proposal to add approximately 70 more townhomes to our neighborhood.

Over the years, many of us chose to live in Huntfield because of its vision: a neighborhood with green space, traditional homes, and a sense of openness and community. Unfortunately, we have watched that vision change repeatedly. Each change increasing density, while reducing green space and altering the character of the neighborhood. Each revision seems to move further away from what residents fell in love with and what makes a neighborhood livable.

The cumulative impact is very real to those of us who live there every day. Traffic has increased significantly, our roads are busier, and parking is already incredibly limited. Safety is a growing concern—not only because of congestion, but because infrastructure has not kept pace with the added density.

We have also lost a great deal of green space. What once contributed to the character and beauty of our neighborhood is steadily disappearing. The morning drives seeing the deer in the back and front of the neighborhood. The trees. The open fields. The true beauty of West Virginia. Have since been replaced with cookie cutter homes thrown up that don't even match our initial home build. These changes affect not only property values and aesthetics, but also quality of life. Many of us feel that the character of Huntfield has been fundamentally altered.

I also want to emphasize that this is not just about one proposal. It is about a pattern. Plans are presented, approved, and then changed, often without meaningful improvements for the residents who already live here. The benefits of these changes appear to be largely financial, while the costs (traffic, congestion, loss of open space, and strain on infrastructure) are borne by the community. WE, the Huntfield community, are the ones who live this every day. Not DRA/DRB.

I respectfully ask the council to carefully consider the long-term impact of approving additional high-density development in an area that is already feeling the strain. The impact of adding more townhomes. Growth should be responsible, transparent, and balanced with the needs and safety of existing residents.

We are not opposed to progress, but we are asking for thoughtful planning, preservation of green space, and accountability to the original vision that brought so many of us to this neighborhood in the first place.

Thank you for your time and consideration.

Victoria Struss
Beware - This email comes from outside the City of Charles Town.

From: Ben German
To: James Newman; Jeff Hynes
Subject: Huntfield comment
Date: Tuesday, February 10, 2026 3:13:15 PM

Good afternoon, the following is for comment at the planning commission meeting tonight, regarding Huntfield proposed changes.

As a resident I adamantly oppose the change to the community plan. Increasing the number of townhomes will not improve the quality of the neighborhood. It is simply asking for the goal post to be moved closer for the builder. Townhouses are easier to sell and provide higher profit for DRB. We as a community should not accept these changes - if DRB wants to sell more home in Huntfield, invest in community amenities, improve product quality, employ better and farther reaching marketing strategies. Don't ask us to be okay with a plan that makes Huntfield less desirable and decreases value for existing residents.

Ben German
Calmes St.
Sent from my iPhone
Beware - This email comes from outside the City of Charles Town.

From: gm housley
To: James Newman
Subject: DRB Master Plan Huntfield changes
Date: Tuesday, February 10, 2026 3:29:26 PM

As a resident of Huntfield I am against any changes that add to density in the neighborhood. My biggest concern is the additional parking it would add to the neighborhood. With the current townhouses on Union Ridge driving down that street is a disaster. Especially without any lots to park.

Adding 7 townhouses where 3 single family dwellings would be is going to burden the community infrastructure immensely.

Stick with what was approved.

Gregg Housley
Colonial Drive.

Yahoo Mail: Search, Organize, Conquer

Links contained in this email have been replaced. If you click on a link in the email above, the link will be analyzed for known threats. If a known threat is found, you will not be able to proceed to the destination. If suspicious content is detected, you will see a warning. Beware - This email comes from outside the City of Charles Town.

From:	jane king
To:	James Newman
Subject:	Planning commission public comment
Date:	Tuesday, February 10, 2026 4:08:59 PM

Dear Planning Commission,

We are residents of the Huntfield community and are writing to express our concerns regarding Dan Ryan Builders' proposal to add additional townhouses to our neighborhood.

We respectfully ask that the Planning Commission not approve any further development without meaningful improvements and commitments that directly benefit the existing community. If additional density is being considered, it should be accompanied by enhancements such as increased green space, playground areas, and infrastructure upgrades that support current and future residents.

Our neighborhood is already experiencing significant challenges with parking and limited available spaces. Adding more townhouses will further increase density and compound these ongoing issues. In addition, Dan Ryan Builders has not yet fulfilled prior commitments to the community. Notably, several completed areas still lack essential infrastructure such as installed street lights, which raises concerns about safety and follow-through.

We urge the Planning Commission to carefully evaluate the current conditions in Huntfield and require Dan Ryan Builders to meet existing obligations and provide tangible community improvements before any new development is approved.

Thank you for your time and consideration.

Sincerely,

Jane and Duncan King

Beware - This email comes from outside the City of Charles Town.

From: Tammy Connors
To: James Newman
Subject: Huntfield
Date: Tuesday, February 10, 2026 4:20:43 PM

Hello,
I am writing as a resident of Huntfield. I am very concerned with DRB wanting to change the master plan and add 70 more townhomes. Parking is already terrible here and the streets are very narrow. DRB is not considering how the townhomes are affecting street parking at all. I live on Colston and there is parking on both sides of the street - which should not be the case. You can not get 2 cars by at a time. What does DRB plan to offer Huntfield in exchange for this plan? It would be a terrible idea to allow more townhomes and add even more cars with the current street congestion.

--
Tammy Connors

Beware - This email comes from outside the City of Charles Town.

From: Erin Maas
To: James Newman
Subject: Planning commission meeting
Date: Tuesday, February 10, 2026 4:52:43 PM

Hello we are residents of the Huntfield neighborhood and understand DRB is looking to add approximately 70 townhomes to our current master plan. Currently there are many parking problems in both townhome and single family areas. Adding more homes and more people to the mess that is here now just doesn't seem logical. We live in a single family and we have a lot of townhome residents taking spaces on our street leaving no parking for us to use. I can't imagine adding even more homes with not enough parking. Our schools are already at capacity and beyond. More homes bring more kids for the schools which we can't afford to house. In addition how is the infrastructure in place going to handle even more residents here?

Thank you for your time.

Sent from my phone so excuse any errors ☺
Beware - This email comes from outside the City of Charles Town.

From: Clara Golden
To: James Newman
Subject: Huntfield Drb request
Date: Tuesday, February 10, 2026 5:01:14 PM

This email is in regards to DRB request to master plan change. What will the community get in exchange for 70 additional town houses? How do they plan on handling the already limited parking space? This change provides no benefit to the residents of the community and will create more strain on utility resource, parking, and schools. Will these be front load townhouses?

How can this get denied as a resident, I do not approve of sect 3F and 2D as one section being turned into townhouses will turn the pool into an overflow lot.
When will this officially be approved or denied? What are the determining factors?

Some are questions to ask DRB. Some are to be answered by planning commission.

Concerned Resident,

Clara Golden
Beware - This email comes from outside the City of Charles Town.

From: Melissa Hackett
To: James Newman
Subject: Huntfield - DRB Proposed Changes
Date: Tuesday, February 10, 2026 5:27:45 PM

Hello,

My name is Melissa, and I've been a resident and homeowner of Huntfield for 16 years. During this time, it has been a long drawn out process to get another developer and finish the original plans for this neighborhood. DRB has already negotiated changes with the city. They got a lot of concessions, and we finally got their commitment to build the pool. Now they want to change the plans again to add 70 more townhomes. As a long time resident and homeowner of this community, I vehemently oppose this. Not only does this change the design, look, and feel of the community, the current infrastructure cannot support this. There is already a huge parking problem in Huntfield. This past snowstorm highlighted that significantly. Please consider the voices of your community over the greed of a national builder.

Thank you,

Melissa Hackett
Beware - This email comes from outside the City of Charles Town.

From: Jonathan Boyette
To: James Newman
Subject: DRB Huntfield
Date: Tuesday, February 10, 2026 6:32:01 PM

Hello,
I am writing in opposition of DRB building ~ 70 townhomes in the Huntfield community. Much of the Huntfield infrastructure is already overburdened, including: Water, streets, and Electrical. DRB has had a plan in place that existing residents and new residents had either agreed to, or had an expectation of upon moving in. Please stick to the existing plan and do not allow DRB to build additional homes in Huntfield.

Thank you,
- Jonathan Boyette
790 Lord Fairfax St
Beware - This email comes from outside the City of Charles Town.

From: Nichole Boyette
To: James Newman
Subject: DRB Huntfield
Date: Tuesday, February 10, 2026 6:39:00 PM

Hello,
I am writing in opposition of DRB building ~ 70 townhomes in the Huntfield community. Much of the Huntfield infrastructure is already overburdened, including: Water, streets, and Electrical. DRB has had a plan in place that existing residents and new residents had either agreed to, or had an expectation of upon moving in. Please stick to the existing plan and do not allow DRB to build additional homes in Huntfield.

Thank you,
- Nichole Boyette
790 Lord Fairfax St

Links contained in this email have been replaced. If you click on a link in the email above, the link will be analyzed for known threats. If a known threat is found, you will not be able to proceed to the destination. If suspicious content is detected, you will see a warning. Beware - This email comes from outside the City of Charles Town.

Planning Commission
101 East Washington Street
Charles Town, WV 25414

Meeting: 02/10/26
Department: Planning Commission
Category: Resolution
Initiator:

SCHEDULED

AGENDA ITEM (ID #)

Election of Officers:
-Chair
-Vice-Chair
-Secretary

ATTACHMENTS: