AGENDA
BRADENTON CITY COUNCIL MEETING
8:30 a.m. Wednesday, May 27, 2026
CITY HALL COUNCIL CHAMBERS - 101 OLD MAIN STREET

1. INVOCATION & PLEDGE

Father Mike Brady with Christ Episcopal Church

(The City does not endorse the religious beliefs of any speaker.)

2. MEETING CALLED TO ORDER

3. PROCLAMATIONS

a) Legislative: Code Enforcement Officers' Appreciation Week
Code Enforcement Officers' Appreciation Week Proclamation
b) Legislative: Faith and Family Month
Faith and Family Month Proclamation

4. PRESENTATIONS

a) Legislative: State of the Manatee County Shelters - Presented by Commissioner Amanda Ballard

5. CITIZEN COMMENTS

Citizen comment will be accepted during the Citizen Comment portion of the meeting on any non-agenda item, agenda item, future agenda item or topic of relevance to the City. Comments will be accepted on the public hearings at the appropriate time.

6. CONSENT AGENDA

a) Administrative Services: Resolution 26-44 - State Housing Initiatives Partnership (SHIP) Housing Rehabilitation Loan
Resolution 26-44
Contractor Bids Received
Scope of Work
Selection of Contractor.
b) Administrative Services: Resolution 26-46 - State Housing Initiatives Partnership (SHIP) Housing Rehabilitation Loan
Resolution 26-46
Contractor Bids Received
Scope of Work

Selection of Contractor

c) Event Review Committee: FIFA World Cup Block and Viewing Party
Application and Site Plan

d) Event Review Committee: Save Our Sons Walk-a-Thon
Application and Site Plan

e) Event Review Committee: The Big Father's Day 5K
Application and Site Plan

f) Legislative: Resolution 26-47 - Affordable Housing Advisory Committee Appointment
Resolution 26-47

g) Planning & Community Development: Resolution 26-28 - Denial for the Application PLN-MAJ-26-0001 for a Major Amendment to the Jordan Creek East Planned Development Plan
Resolution 26-28

h) Police: 2026-2027 School Resource Officer Program Agreement
2026-2027 School Resource Officer Program Agreement

i) Public Works & Utilities: Amendment to the Traffic Signal Maintenance and Compensation Agreement with the Florida Department of Transportation (FDOT)
Amendment to the Traffic Signal Maintenance and Compensation Agreement

j) Public Works & Utilities: Change Order 2 for Eastside Drainage Improvements
Change Order 2

k) Public Works & Utilities: GT Bray Park EMS Station TECO Easement
GT Bray Park EMS Station TECO Easement

l) Public Works & Utilities: Interlocal Agreement (ILA) with Manatee County for Installation, Maintenance, and Use of an Alternative Potable Water Supply Line for Blake Hospital
ILA with Manatee County

7. BUSINESS/ADVERTISING, PETITIONS, HEARINGS & COMMUNICATIONS

a) Planning & Community Development: ORDINANCE 4073 - SECOND READING AND PUBLIC HEARING
AN ORDINANCE OF THE CITY OF BRADENTON, FLORIDA, AMENDING THE CITY OF BRADENTON COMPREHENSIVE PLAN FUTURE LAND USE MAP TO DESIGNATE CERTAIN LAND GENERALLY LOCATED EAST OF 50TH STREET WEST AND 70 FEET SOUTH OF MANATEE AVE WEST, IDENTIFIED AS PARCEL ID 3629100003 AND 3629000005, AND MORE PARTICULARLY DESCRIBED HEREIN, CONTAINING APPROXIMATELY 0.397 ACRES AND OWNED BY SHIV OHM P L AND ZEEVA RE LLC, RESPECTIVELY, UNDER THE SUBURBAN COMMERCIAL CORRIDOR FUTURE LAND USE CATEGORY; PROVIDING FOR APPLICABILITY; PROVIDING FOR SEVERABILITY; AND PROVIDING FOR AN EFFECTIVE DATE.

Ordinance 4073
Staff Report
Application Materials

b) Planning & Community Development: ORDINANCE 4074 - SECOND READING AND PUBLIC HEARING
AN ORDINANCE OF THE CITY OF BRADENTON, FLORIDA, PROVIDING FOR AN AMENDMENT TO THE CITY OF BRADENTON LAND USE ATLAS; TO DESIGNATE CERTAIN LAND GENERALLY LOCATED EAST OF 50TH STREET WEST AND 70 FEET SOUTH OF MANATEE AVE WEST, IDENTIFIED AS PARCEL ID 3629100003 AND 3629000005, AND MORE PARTICULARLY DESCRIBED HEREIN, CONTAINING APPROXIMATELY 0.397 ACRES AND OWNED BY SHIV OHM P L AND ZEEVA RE LLC, RESPECTIVELY, UNDER THE SUBURBAN COMMERCIAL CORRIDOR ZONING CATEGORY; PROVIDING FOR APPLICABILITY; PROVIDING FOR SEVERABILITY; AND PROVIDING FOR AN EFFECTIVE DATE.
Ordinance 4074
Staff Report
Application Materials

c) Planning & Community Development: **Quasi-Judicial:** ORDINANCE 4067 - SECOND READING AND PUBLIC HEARING
AN ORDINANCE OF THE CITY OF BRADENTON, FLORIDA, AMENDING THE CITY OF BRADENTON COMPREHENSIVE PLAN FUTURE LAND USE MAP TO DESIGNATE CERTAIN LAND GENERALLY LOCATED WEST OF 15TH STREET WEST, NORTH OF 6th AVENUE WEST, AND SOUTH OF MANATEE AVE WEST, IDENTIFIED AS PARCEL ID 3354500109, AND MORE PARTICULARLY DESCRIBED HEREIN, CONTAINING APPROXIMATELY 3.9464 ACRES AND OWNED BY MANATEE COUNTY, FROM THE URBAN CENTRAL BUSINESS DISTRICT (UCBD) FUTURE LAND USE CATEGORY TO THE URBAN CORE (URBCORE) FUTURE LAND USE CATEGORY; PROVIDING FOR APPLICABILITY; PROVIDING FOR SEVERABILITY; AND PROVIDING FOR AN EFFECTIVE DATE.
Ordinance 4067
Staff Report
Application Materials

d) Planning & Community Development: PLN-DVA-26-0001 LOCAL DEVELOPMENT AGREEMENT (LDA) - SECOND PUBLIC HEARING
Approval of a Development Agreement between the City of Bradenton and Amres Investments, LLC pursuant to Section 163.3227, Florida Statutes and approval of a density increase in the Urban Core Future Land Use Category pursuant to Policy 1.2.1 of the Future Land Use Element of the City of Bradenton's Comprehensive Plan.
Development Agreement

e) Legislative: ORDINANCE 4077 - FIRST READING
AN ORDINANCE OF THE CITY OF BRADENTON, FLORIDA, PROPOSING AN AMENDMENT TO THE BRADENTON CITY CHARTER; PROPOSING A CHARTER AMENDMENT TO SECTION 8 OF THE CITY CHARTER TO REMOVE THE DESIGNATION OF THE MAYOR AS THE "EX OFFICIO PRESIDENT OF THE COUNCIL," TO REMOVE THE MAYOR'S RIGHT TO CAST A VOTE IN THE EVENT OF A TIE, AND TO PROVIDE THAT THE MAYOR IS NOT A MEMBER OF THE CITY COUNCIL; CALLING FOR A REFERENDUM ON THE PROPOSED AMENDMENT TO THE CHARTER TO BE HELD AT THE GENERAL ELECTION ON NOVEMBER 3, 2026; PROVIDING THE BALLOT TITLE AND BALLOT SUMMARY FOR THE REFERENDUM; PROVIDING FOR DIRECTION TO THE CITY CLERK AND COORDINATION WITH THE MANATEE COUNTY SUPERVISOR OF ELECTIONS; PROVIDING FOR SEVERABILITY, CONFLICTS, AND AN EFFECTIVE DATE.
Ordinance 4077

f) Legislative: ORDINANCE 4078 - FIRST READING
AN ORDINANCE OF THE CITY OF BRADENTON, FLORIDA, PROPOSING AN AMENDMENT TO THE BRADENTON CITY CHARTER; PROPOSING A CHARTER AMENDMENT TO ADD A SECTION 14 TO THE CITY CHARTER TO PROVIDE FOR TERM LIMITS FOR THE MAYOR AND COUNCIL MEMBERS; CALLING FOR A REFERENDUM ON THE PROPOSED AMENDMENT TO THE CHARTER TO BE HELD AT THE GENERAL ELECTION ON NOVEMBER 3, 2026; PROVIDING THE BALLOT TITLE AND BALLOT SUMMARY FOR THE REFERENDUM; PROVIDING FOR DIRECTION TO THE CITY CLERK AND COORDINATION WITH THE MANATEE COUNTY SUPERVISOR OF ELECTIONS; PROVIDING FOR SEVERABILITY, CONFLICTS, AND AN EFFECTIVE DATE.
Ordinance 4078

8. NEW BUSINESS BY DEPARTMENT HEADS, CITY ATTORNEY AND COUNCIL

a) City Administration: Agreement of Purchase & Sale for 308 13th Street West
Agreement of Purchase and Sale

b) City Administration: Change Order Number 13 Revision 2 with AECOM for the Bradenton Police Department Headquarters
Change Order Number 13 Revision 2 with AECOM

c) City Administration: Change Order Number 4 with NDC Construction for the Bradenton Police Department Headquarters
Change Order 4

d) City Administration: Resolution 26-48 - Community Development Block Grant Disaster Recovery Program Funds (CDBG-DR) Infrastructure Projects
Resolution-26-48

e) City Administration: Resolution 26-49 - Community Development Block Grant Disaster Recovery Program Funds (CDBG-DR) Housing Project

Resolution 26-49

9. UNFINISHED BUSINESS

10. COUNCIL REPORTS

11. DEPARTMENT HEAD REPORTS

a) Information Technology: MyBradenton 311 App

12. ADJOURN

RULES OF PROCEDURE FOR AGENDA AND PUBLIC APPEARANCES BEFORE CITY COUNCIL

Please place all cell phones on silent!

PRIOR TO COUNCIL MEETING: Appointments on the agenda, all items from Department Directors and other interested parties must be submitted before 12:00 p.m. on the Wednesday preceding the Council meeting. Anyone wishing to be placed on the agenda must contact Tamara Melton, City Clerk, at City Hall by phone 941-932-9463 or email: tamara.melton@bradentonfl.gov and give their name, business name (if applicable), whether they are resident taxpayers of the City and their business before Council. Appearances before Council will be authorized by the Mayor or Councilperson in charge of the meeting. NOTE: The Mayor may ask a city department to look into an issue prior to the meeting to see if the issue can be resolved. If the Mayor or Councilperson in charge of the meeting feels the request is justified, they will instruct the City Clerk as to its placement on the agenda.

Non-Discrimination Statement: The City of Bradenton prohibits discrimination in all of its services, programs or activities on the basis of race, color, age, disability, sex, national origin, religion, genetic information or marital status. Persons with a disability needing a reasonable accommodation to participate in, or who require assistance or an alternative means for communication of program information such as Braille, large print, etc., should contact as soon as possible, but at least 48 hours in advance:

City of Bradenton
ADA/Title VI Coordinator
101 Old Main Street
Bradenton, FL 34205
ADACoordinator@cityofbradenton.com
941-932-9400

TTY: 7-1-1 or 1-800-955-8771

La ciudad de Bradenton proveera servicio de interprete a las personas quienes su primer lenguage no es el ingles. Si necesita estos servicios, usted o su representante puede comunicar al ADA/Title VI Coordinator, 101 Old Main Street, Bradenton, FL 34205. Tambien puede llamar al (941) 932-9470 o enviar correo electronico a ADACoordinator@cityofbradenton.com

AT COUNCIL MEETING:

Citizen comment will be accepted during the Citizen Comment portion of the meeting on any non-agenda item, agenda item, future agenda item or topic of relevance to the City. Citizen comment related to any public hearing item shall be provided during the duly noticed public hearing in order to maintain an accurate record of the proceedings. All citizen comments related to quasi-judicial items are required to be under oath and such comments will be invited to be presented during the duly noticed public hearing for such items.

If an individual (or agent) wishes to address the City Council, they should complete a comment card available at the back of the Chamber and submit such card to the City Clerk.

At the appropriate time during the meeting, the Mayor will call speakers to come forward. After being recognized by the Mayor, the individual should come to the podium and, for the public record, state their name and address, and then provide any relevant comments or testimony related to the item they wish to address. In the case of an agent, they shall identify themselves and the party they represent. The speaker should then proceed to state their position or present their information.

An individual appearance for citizen comment will be limited to three (3) minutes unless additional time is permitted by the Mayor or consensus of the Council. Additional time will be allowed (up to 10 minutes at the discretion of the Mayor or consensus of the Council) for public hearing items if the speaker is officially representing a group of five or more people, provided that written authorization is provided that the person is authorized to speak on behalf of the group.

Note: If handouts are being distributed, please provide a minimum of ten (10) copies to the City Clerk. If you wish to display a drawing or rendering, contact Tamara Melton, as indicated above, prior to the meeting. Any submissions commented on, photographs, letters, renderings, etc. will be kept by the City Clerk for the official record.

PURSUANT TO FLORIDA STATUTE 286.0105: If an individual decides to appeal any decision made by the board, council, agency, or commission at this meeting, such individual will need a record of the proceedings, and for such purpose may

need to ensure that a verbatim record of the proceedings is made, which record includes the testimony and evidence upon which the appeal is to be based.

PLEDGE OF PUBLIC CONDUCT We, the Mayor, City Council and Employees of the City of Bradenton, agree to: *Establish a process to promote positive interaction among ourselves and the citizens of Bradenton in a positive and non-threatening environment. *Encourage visible, involved and active participation among all. *Promote improved communication through active listening, providing feedback and honest expression of ideas. *Utilize consensus for decision making. *We realize that though we may disagree, we will be respectful of each other. *We will direct all comments to the issues and will avoid personal attacks.

AGENDA ITEM NO. 3.a

Item Cover Page

CITY COUNCIL MEETING AGENDA ITEM REPORT

DATE: May 27, 2026

SUBMITTED BY: Kelly Thomas, Legislative

ITEM TYPE: Proclamation

AGENDA SECTION: PROCLAMATIONS

SUBJECT: Code Enforcement Officers' Appreciation Week

SUGGESTED ACTION: N/A

Is this item Quasi-Judicial?
No

Does this item require a public hearing?
No

EXPLANATION:
N/A

FINANCIAL IMPACT:
N/A

ATTORNEY REVIEW/RECOMMENDATION:
N/A

SUGGESTED MOTION:
N/A

ATTACHMENTS:
Code Enforcement Officers' Appreciation Week Proclamation

City of Bradenton
Office of the Mayor

Proclamation

By virtue of the authority vested in me as Mayor of the City of Bradenton, I do hereby issue this proclamation honoring

Code Enforcement Officers' Appreciation Week
June 1-5, 2026

Whereas, code enforcement officers provide for the safety, health and welfare of the citizens in this community through the enforcement of building, zoning, housing, animal control, fire safety, environmental and other codes and ordinances; and

Whereas, code enforcement officers are often not credited for the jobs that they do in saving lives and improving neighborhoods. Every day, assisted by support and program staff, they attempt to provide quality customer service to the public for the betterment of the community; and

Whereas, too many times their efforts go unnoticed, even after code compliance has been accomplished due to their efforts and expertise; and

Whereas, code enforcement officers are dedicated, well trained, and highly responsible individuals who take their jobs seriously and are proud of their department and the local government within which they serve.

Now, Therefore Be It Resolved that, I, Gene Brown, as Mayor of the City of Bradenton, Florida, do hereby proclaim the week of June 1-5, 2026, as ***Code Enforcement Officers' Appreciation Week*** and urge all citizens to express appreciation for the dedication and outstanding service provided by the code enforcement officers.

Gene Brown
Mayor
May 27, 2026

AGENDA ITEM NO. 3.b

Item Cover Page

CITY COUNCIL MEETING AGENDA ITEM REPORT

DATE: May 27, 2026

SUBMITTED BY: Kelly Thomas, Legislative

ITEM TYPE: Proclamation

AGENDA SECTION: PROCLAMATIONS

SUBJECT: Faith and Family Month

SUGGESTED ACTION: N/A

Is this item Quasi-Judicial?
No

Does this item require a public hearing?
No

EXPLANATION:
N/A

FINANCIAL IMPACT:
N/A

ATTORNEY REVIEW/RECOMMENDATION:
N/A

SUGGESTED MOTION:
N/A

ATTACHMENTS:
Faith and Family Month Proclamation

City of Bradenton
Office of the Mayor

Proclamation

By virtue of the authority vested in me as Mayor of the City of Bradenton, I do hereby issue this proclamation honoring

Faith and Family Month
June 2026

Whereas, Faith and Family Month will serve as a meaningful affirmation of the importance of strong families and faith in fostering healthy and thriving communities; and

Whereas, Somebody Cares Tampa Bay and Florida residents are encouraging local churches, businesses and organizations to create events that will educate and help enhance the quality of life for all families in our local communities; and

Whereas, family stability is the cornerstone of helping our families grow and prosper. Families who participate in faith-based activities are less likely to experience abuse, dysfunctional homes and divorce; and

Whereas, the City of Bradenton expresses their heartfelt thanks for the many positive contributions that our community makes to help our families and continues to create an environment for all to live, work and play.

Now, Therefore Be It Resolved that, I, Gene Brown, as Mayor of the City of Bradenton, Florida, do hereby proclaim ***June 2026,*** as ***Faith and Family Month,*** and urges all citizens to participate in family activities promoting personal responsibility and service to others.

Gene Brown
Mayor
February 26, 2026

AGENDA ITEM NO. 4.a

Item Cover Page

CITY COUNCIL MEETING AGENDA ITEM REPORT

DATE: May 27, 2026

SUBMITTED BY: Tamara Melton, Legislative

ITEM TYPE: Presentation

AGENDA SECTION: PRESENTATIONS

SUBJECT: State of the Manatee County Shelters - Presented by Commissioner Amanda Ballard

SUGGESTED ACTION: N/A

Is this item Quasi-Judicial?
No

Does this item require a public hearing?
No

EXPLANATION:
N/A

FINANCIAL IMPACT:
N/A

ATTORNEY REVIEW/RECOMMENDATION:
N/A

SUGGESTED MOTION:
N/A

ATTACHMENTS:

AGENDA ITEM NO. 6.a

Item Cover Page

CITY COUNCIL MEETING AGENDA ITEM REPORT

DATE: May 27, 2026

SUBMITTED BY: Dietra Barfield, Administrative Services

ITEM TYPE: Resolution

AGENDA SECTION: CONSENT AGENDA

SUBJECT: Resolution 26-44 - State Housing Initiatives Partnership (SHIP) Housing Rehabilitation Loan

SUGGESTED ACTION: Approve the SHIP loan for $41,415.00 for 816 12th Avenue West, Bradenton, FL 34205. The bid submitted by Pinnacle Group for $41,415.00 was determined to be the most responsive bid.

Is this item Quasi-Judicial?
No

Does this item require a public hearing?
No

EXPLANATION:
This loan will provide $41,415.00 in Housing Rehabilitation (SHIP) funding to rehabilitate single-family home located in Ward 5 at 816 12th Avenue West, Bradenton, FL 34205. The contractor bid submitted by Pinnacle Group for $41,415.00 was determined to be the most responsive bid for this project.

The work will include accessibility improvements in the amount of $1,045.00, which will be provided as a grant under the SHIP program. As the homeowner resides within the Tamiami Trail Community Redevelopment Area (CRA), a CRA grant in the amount of $8,937.50 will be applied toward the cost of installing impact-rated windows, doors, and garage door once the project is completed. These two grants will reduce the total loan amount to $31,432.50.

FINANCIAL IMPACT:
The City of Bradenton receives SHIP funding on an annual basis for housing related activities. (SHIP Fund 180).

ATTORNEY REVIEW/RECOMMENDATION:
Reviewed by City Attorney Scott Rudacille.

SUGGESTED MOTION:
Motion to approve Resolution 26-44.

ATTACHMENTS:
Resolution 26-44
Contractor Bids Received
Scope of Work
Selection of Contractor.

CITY OF BRADENTON
RESOLUTION NUMBER 26-44

A RESOLUTION OF THE CITY COUNCIL OF THE CITY OF BRADENTON, FLORIDA, APPROVING SHIP REHABILITATION LOAN FOR 816 12th AVENUE WEST BRADENTON, FL 34205 FOR $41,415.00; AND PROVIDING AN EFFECTIVE DATE.

WHEREAS the City Council for the City of Bradenton wishes to preserve its affordable housing stock by providing funds for housing rehabilitation; and

WHEREAS, homeowner **Audrey Smith** (the "Owner") was determined eligible to receive assistance with rehabilitation of her home located at 816 12th Avenue West, Bradenton, FL 34205; and

WHEREAS the City awards funding for housing rehabilitation projects through an open, competitive bidding process, and the bid submitted by Pinnacle Group for $41,415.00 was determined to be the most responsive bid.

NOW, THEREFORE, BE IT RESOLVED BY THE CITY COUNCIL FOR THE CITY OF BRADENTON, FLORIDA:

1. The City of Bradenton hereby approves the Housing Rehabilitation loan in the amount of $41,415.00 to the Owner for the property located at 816 12th Avenue West, Bradenton, FL 34205;

2. The City Housing and Community Development Manager is authorized, pursuant to Resolution 25-26 and Section 2-236 of the City Code, to execute the City of Bradenton Housing and Community Development Division Homeowner Agreement and related documents with the Owners, consistent with this Resolution; and

3. This Resolution shall take effect immediately upon its adoption.

PASSED AND DULY ADOPTED BY THE CITY COUNCIL FOR THE CITY OF BRADENTON, FLORIDA, WITH A QUORUM PRESENT AND VOTING ON THIS 27th DAY OF MAY 2026.

ATTEST:

Tamara Melton CITY CLERK	Gene Brown Mayor

APPROVED AS TO FORM:

Scott Rudacille
CITY ATTORNEY

Contractor Bids Received

Date: May 4, 2026

Time: 2:00 p.m.

Project: Audrey Smith

816 12th Ave W, Bradenton, FL 34205

Program: SHIP- State Initiatives Partnership Program

Contractor	**Proposal Budget**	Received by:	Time
Ellis Enterprises Construction & Development, Inc.	$60,083.60	Dietra Barfield	11:31 a.m.
Construction by Cadena	$50,760.00	Vicki White	1:57 p.m.
Pinnacle Group	$41,415.00	Vicki White	9:10 a.m.

Opened by:

Dietra Barfield
HCD Staff

5/4/26 @ 2pm
Date/Time:

WORK SPECIFICATIONS

Client: Audrey Smith
Property: 816 12th Ave. W.
Bradenton, FL 34205
Telephone:

Contact for Information:
DIETRA BARFIELD
CITY OF BRADENTON

Total Bid:	0.00
Change Orders	0.00
Adjusted Bid:	0.00

Revised on 4.27.26

Materials + Labor

1. OVERHEAD & PROFIT

OVERHEAD & PROFIT
Overhead and profit is capped at 20%

2. INSTALL A BATTERY OPERATED SMOKE DETECTOR

2.00 EACH

INSTALL A BATTERY OPERATED SMOKE DETECTOR
Install a UL listed battery operated smoke detector with test button.

* Please install, in existing locations, a smoke/carbon monoxide detector with a 10-year sealed battery.

3. INSTALL NEW ELECTRIC REFRIGERATOR

1.00 EACH

INSTALL NEW ELECTRIC REFRIGERATOR
Purchase and install a new Energy Star qualified electric refrigerator, with a maximum purchase price of $1600.00 (pretax). Contractor will meet with homeowner to find a refrigerator within the price range that includes features the customer desires that fits the current current refrigerator's slot.

* Full-size refrigerator—include installation of waterline and shutoff.

4. REPAIR LEAKY PIPES UNDER SINK

1.00 EACH

REPAIR LEAKY PIPES UNDER SINK
Repair leaking pipes under sink(s) specified.

* Guest Bathroom

5. ADA-COMPLIANT TOILET

2.00 EACH

ADA-COMPLIANT TOILET
Install and ADA-compliant WaterSense toilet Include solid plastic white seat, plastic supply pipe, anti-syphon ballcock, brass stop valve and wax seal. All work and equipment shall meet all applicable codes.

* Master & Guest Bathrooms- replace the stops

6. 30" BATHROOM VANITY CABINET & INTEGRAL CULTURED MARBLE TOP

1.00 EACH

30" BATHROOM VANITY CABINET & INTEGRAL CULTURED MARBLE TOP

FURNISH AND INSTALL A MEDIUM-PRICED, STANDARD-STOCK CABINET AND/OR COUNTERTOP. Cabinets shall be made by a professional cabinet maker or cabinet manufacturer. Homeowners shall make selection of color and style from within the offered group of medium-priced, standard-stock cabinets and/or countertops. Install a cultured marble countertop with intregal bowl and back and end splashes. Allowance for Vanity: $300 including top.

* Guest Bathroom
(Include faucet—$100 allowance with limited lifetime warranty)

7. INSTALL A NEW HANDHELD SHOWER HEAD (*)

1.00 EACH

INSTALL A NEW SHOWER HEAD
Install a new handheld shower head in shower stall. Fixture will be Delta or Moen or equivalent with a lifetime limited warranty. Owner to select fixture using a $150.00 purchase allowance.

* Master Bathroom

8. INSTALL BASE CABINET AND COUNTER TOP

10.00 LF

Install base cabinet and counter top
FURNISH AND INSTALL A MEDIUM-PRICED, STANDARD-STOCK CABINET AND/OR COUNTERTOP. Cabinets shall be made by a professional cabinet maker or cabinet manufacturer. Homeowners shall make selection of color and style from within the offered group of medium-priced, standard-stock cabinets. Include the cost of installing a backsplash that matches the countertop material in your bid.

* Kitchen*

9. GARAGE DOOR OVERHEAD 9' X 7' IMPACT

1.00 EACH

GARAGE DOOR OVERHEAD 9' X 7' IMPACT
Remove existing door and hardware, dispose of debris in legal dump. Replace with 24 gauge steel insulated impact door with factory finish. Replace all hardware and adjust door to operate properly. Owner to select from available stock colors. Include the cost of a garage door opener in your bid.

Materials + Labor

10. INSTALL AN EXTERIOR 6-PANEL INSULATED IMPACT DOOR IN EXISTING O

2.00 EACH

INSTALL AN EXTERIOR 6-PANEL INSULATED IMPACT DOOR IN EXISTING OPENING (*)
Install a new, 6-panel insulated impact door with three hinges, door stop, striker plate, peep site, threshold and weatherstripping in exisiting opening. Repair and fill holes in door jamb and casing. Install a new entry and single cylinder deadbolt lockset keyed alike. Purchase allowance: $100 for entry lock and deadbolt. To include painting.

*1- Front of the home (Outswing)
*1 - Left Side of the home

11. IMPACT WINDOW, STANDARD SIZE

6.00 EACH

IMPACT WINDOW, STANDARD SIZE
Install standard size impact window to meet Florida Building Code requirements. Window will be Energy Star qualified.

2- Front of the home
1- Left side of the home
1- Back of the home
2- Right side of the home

12. REPLACE AIR VENTS

7.00 EACH

REPLACE AIR VENTS

* Replace all air vents

13. INSTALL NEW WALL CABINET (*)

10.00 LF

INSTALL NEW WALL CABINET (*)
FURNISH AND INSTALL A MEDIUM-PRICED, STANDARD-STOCK CABINET AND/OR COUNTERTOP. Cabinets shall be made by a professional cabinet maker or cabinet manufacturer. Homeowners shall make selection of color and style from within the offered group of medium-priced, standard-stock cabinets.

Kitchen

14. INSTALL A SELF CIRCULATING RANGE HOOD (*)

1.00 EACH

INSTALL A SELF CIRCULATING RANGE HOOD (*)
Install a new 2 speed 30", self circulating range hood with light. Owner shall select range hood using a $150 purchase allowance.

- Include in the scope of work, constructing a vent box around the opening and a cap over the opening in the ceiling.

15. CLEAN ALL DUCTS

1.00 EACH

CLEAN ALL DUCTS
Clean all air condirioning and heating ducts.

16. INSTALL A NEW 2-BOWL KITCHEN SINK AND FAUCET (*)

1.00 EACH

INSTALL A NEW 2-BOWL KITCHEN SINK AND FAUCET (*)
Install a new 8" deep double bowl stainless steel drop-in kitchen sink with two basket strainers. Install a new single control chrome washerless kitchen sink faucet. Faucet to have a minimum flow rate of 2 gallons per minute. Install new trap and drain line from wall outlet to sink, brass stop valves and supply lines from stop valves to faucet. Faucet to have at least a limited warranty. Owner to select using a purchase allowance of: $100.00 for faucet; $200.00 for sink.

* Kitchen*

17. INSTALL A NEW BATHTUB COMPLETE (*)

1.00 EACH

INSTALL A NEW BATHTUB COMPLETE (*)
Install a 5' white enameled, formed steel tub complete with lever operated trip waste drain and overflow, PVC waste, single lever, pressure balance shower diverter chrome shower head and chrome faucets. Fixtures to have a lifetime limited warranty.
Purchase allowance: Fixture $150. Bathtub $400, drain assembly $50.

* Guest bathroom*

18. GENERAL REQUIREMENTS - DISCLAIMER

1.00 EACH

General Requirements - DISCLAIMER
HOUSING & COMMUNITY DEVELOPMENT ASSUMES NO RESPONSIBILITY OR LIABILITY.

All work specified is not conclusive. All measurements, and quantities in this work write-up are approximate. Prior to bid submittal, all contractors are required to verify exact measurements, sizes and quantities; and to know job conditions, and to immediatly notify the Housing & Community Development

Materials + Labor

Department of any other necessary work to achieve quality finish products that meet or exceed applicable specs and codes prior to contract signing. The specified items in this work write up DO NOT preempt any current applicable codes enforced by the permitting authority having jurisdiction.

19. INSTALL CERAMIC TILE ON WALL (*)

INSTALL CERAMIC TILE ON WALL (*)
Prepare wall surface and install new thin set ceramic tile on wall per manufacturer's instructions. Apply mildew resistant acrylic latex caulk at intersections with horizontal surfaces, corners and other wall surfaces. Owner to select tile color using a tile purchase allowance of $1.50 per square foot.

* Guest bathroom
(include the cost of a soap dish)

The Friendly City

CITY OF BRADENTON
Housing and Community Development Division
101 Old Main Street
Bradenton. Florida
Phone: (941) 932-9400

Homeowner Selection of Contractor

I, **Audrey Smith,** along with **Vicki White, Housing and Community Development Manager,** have reviewed all the bids that were received by the City of Bradenton on my behalf for the rehabilitation of my home located at:

816 12th Ave W, Bradenton, FL 34205

The bids that were received are as follows:

Herman Cadena	$50,760.00
Pinnacle Group	$41,415.00
Ellis Enterprises	$60,083.00

I, **Audrey Smith** select the following contractor and bid to be awarded the contract to rehabilitate my home. I further understand that any contractor that I select must be approved by the Housing and Community Development Manager who retains the right to reject any contractor.

Pinnacle Group — Contractor

41,415.00 — Bid amount

Audrey Smith — Signature

5-5-2026 — Date

AGENDA ITEM NO. 6.b

Item Cover Page

CITY COUNCIL MEETING AGENDA ITEM REPORT

DATE:	May 27, 2026
SUBMITTED BY:	Dietra Barfield, Administrative Services
ITEM TYPE:	Resolution
AGENDA SECTION:	CONSENT AGENDA
SUBJECT:	Resolution 26-46 - State Housing Initiatives Partnership (SHIP) Housing Rehabilitation Loan
SUGGESTED ACTION:	Approve the SHIP loan for $38,760.00 for 809 16th Street East, Bradenton, FL 34208. The bid submitted by Construction by Cadena for $38,760.00 was determined to be the most responsive bid.

Is this item Quasi-Judicial?
No

Does this item require a public hearing?
No

EXPLANATION:
This loan will provide $38,760.00 in Housing Rehabilitation (SHIP) funding to rehabilitate single-family home located in Ward 5 at 809 16th Street East, Bradenton, FL 34208. The bid submitted by Construction by Cadena for $38,760.00 was determined to be the most responsive bid for this project.

As the homeowner resides within the Central Community Redevelopment Area (CRA), a CRA grant in the amount of $10.920.00 will be applied, reducing the total loan amount to $27,840.00.

FINANCIAL IMPACT:
The City of Bradenton receives SHIP funding on an annual basis for housing related activities. (SHIP Fund 180).

ATTORNEY REVIEW/RECOMMENDATION:
Reviewed by City Attorney Scott Rudacille.

SUGGESTED MOTION:
Motion to approve Resolution 26-46.

ATTACHMENTS:
Resolution 26-46
Contractor Bids Received
Scope of Work
Selection of Contractor

CITY OF BRADENTON
RESOLUTION NUMBER 26-46

A RESOLUTION OF THE CITY COUNCIL OF THE CITY OF BRADENTON, FLORIDA, APPROVING SHIP REHABILITATION LOAN FOR 809 16th STREET EAST BRADENTON, FL 34208 FOR $38,760.00; AND PROVIDING AN EFFECTIVE DATE.

WHEREAS the City Council for the City of Bradenton wishes to preserve its affordable housing stock by providing funds for housing rehabilitation; and

WHEREAS, homeowner **Cynthia Knight** (the "Owner") was determined eligible to receive assistance with rehabilitation of her home located at **809 16th Street East, Bradenton, Florida 34208**; and

WHEREAS the City awards funding for housing rehabilitation projects through an open, competitive bidding process, and the bid submitted by Construction by Cadena, LLC, for $38,760.00 was determined to be the most responsive bid.

NOW, THEREFORE, BE IT RESOLVED BY THE CITY COUNCIL FOR THE CITY OF BRADENTON, FLORIDA:

1. The City of Bradenton hereby approves the Housing Rehabilitation loan in the amount of $38,760.00 to the Owner for the property located at 809 16th Street East, Bradenton, Florida 34208;

2. The City Housing and Community Development Manager is authorized, pursuant to Resolution 25-26 and Section 2-236 of the City Code, to execute the City of Bradenton Housing and Community Development Division Homeowner Agreement and related documents with the Owner, consistent with this Resolution; and

3. This Resolution shall take effect immediately upon its adoption.

PASSED AND DULY ADOPTED BY THE CITY COUNCIL FOR THE CITY OF BRADENTON, FLORIDA, WITH A QUORUM PRESENT AND VOTING ON THIS 27TH DAY OF MAY 2026.

ATTEST:

Tamara Melton CITY CLERK	Gene Brown Mayor

APPROVED AS TO FORM:

Scott Rudacille
CITY ATTORNEY

Contractor Bids Received

Date: May 6, 2026

Time: 2:00 p.m.

Project: **Cynthia Knight**

809 16th Street E

Bradenton, FL 34208

Program: SHIP- State Initiatives Partnership Program

Contractor	**Proposal Budget**	Received by:	Time
Construction by Cadena	$38,760.00	Vicki White	1:50 p.m.
Ellis Enterprises	$46,440.00	Dietra Barfield	1:35 p.m.
Pinnacle Group	$69,329.00	Vicki White	9:00 p.m.

Opened by: Vicki White
HCD Staff

5/6/2026 at 2:05 p.m.
Date/Time:

WORK SPECIFICATIONS

Client: Cynthia Knight
Property: 809 16th Street E
Bradenton, FL 34208
Telephone:

Contact for Information:
VICKI WHITE
CITY OF BRADENTON

Total Bid:	0.00
Change Orders	0.00
Adjusted Bid:	0.00

Revised on 4.30.2026

Materials + Labor

1. GENERAL REQUIREMENTS - DISCLAIMER

1.00 EACH

General Requirements - DISCLAIMER
HOUSING & COMMUNITY DEVELOPMENT ASSUMES NO RESPONSIBILITY OR LIABILITY.

All work specified is not conclusive. All measurements, and quantities in this work write-up are approximate. Prior to bid submittal, all contractors are required to verify exact measurements, sizes and quantities; and to know job conditions, and to immediatly notify the Housing & Community Development Department of any other necessary work to achieve quality finish products that meet or exceed applicable specs and codes prior to contract signing. The specified items in this work write up DO NOT preempt any current applicable codes enforced by the permitting authority having jurisdiction.

GENERAL REQUIREMENT WORK WRITE UP
01.0025 PERMITS AND LICENSES
Contractor shall provide all required sketches and/or drawings as required by the construction permitting authority having jurisdiction. Drawings need not be sealed. Contractor shall obtain, pay for and post on site all permits and licenses necessary to complete this project. Contractor and subcontractors must have current license required by the State, County and City.

01.0050 CODE COMPLIANCE
To comply with local and Florida Building Code.

01.0150 CONTRACTOR TO VERIFY MEASUREMENTS, SIZES & QUANTITIES
All measurements, sizes and quantities in this Work Write-Up are APPROXIMATE. The Contractor is responsible for verifying exact measurements, sizes and quantities prior to submitting a quote.

01.0225 GENERAL WARRANTY
Materials installed and work performed shall have a one year Contractor warranty from the date of final acceptance of the work by the Homeowner and Program Administrator. Refer to project Contract for specific requirements concerning warranty.

01.0250 SCHEDULING WORK

Materials + Labor

Contractor to schedule work between 8:00am and 6:00pm Monday through Friday. Requests to work before or after these hours and on weekends must be approved by the Homeowner. Work requiring a Compliance Inspection by the Program Administrator can ONLY be performed between 8:00am and 5:00pm Monday through Friday. The Contractor is responsible for scheduling and coordinating subcontractor work.

01.0275 COMPLIANCE INSPECTIONS
Contractor to call Program Administrator for inspection of all work that will be concealed from view following completion of work on that item. For example, these inspections frequently include, but are not limited to, 1) inspection of footings, 2) inspection of roof sheathing prior to installation of new felt and shingles and 3) inspection of repaired floors prior to installation of new sub-floor, underlayment and floor coverings. Check each spec to see if a Compliance Inspection is required. Work that has been concealed without a Compliance Inspection may result in payment delays or denials!

01.0325 PROTECT HOUSE CONTENTS FROM DAMAGE DURING WORK
Contractor shall take steps to protect house and contents from damage during project. Contractor is advised to use drop cloths to protect furniture, appliances, entertainment systems, and other house contents and components. Contractor shall move furniture and appliances out of and back into work areas once work is complete. Contractor not to leave furniture, appliances, clothering or other house contents unprotected outside house during job.

01.0500 GENERAL CLEANUP
Contractor to provide clear and safe passage ways in and around structure during project. Contractor to remove debris and building materials from in and around structure being repaired to legal dump site regularly and at the end of the project. In progress and final clean-up to include--but is not limited to--damp wiping, sweeping, mopping, and vacuuming.

2. OVERHEAD & PROFIT

1.00 EACH

OVERHEAD & PROFIT
Overhead and profit is capped at 20%

Materials + Labor

3. PRESSURE WASH EXTERIOR WALLS

1.00 EACH

PRESSURE WASH EXTERIOR WALLS

4. PAINT EXTERIOR SURFACES OF MASONRY WALLS (*)

2040.00 SF

PAINT EXTERIOR SURFACES OF MASONRY WALLS (*)
Apply sealer if necessary and 2 coats of masonry paint as per manufacturers specification. Homeowner may select up to two colors.

Include the cost of painting an-masonry items, such as doors, trim, gable ends in your bid.

5. ALUMINUM FASCIA & SOFFIT (*)

2000.00 SF

ALUMINUM FASCIA & SOFFIT (*)
Install new aluminum fascia and soffit as per manufacturer's specification. Owner to select color.

* Remove,replace any rotten wood around the home, including the front porch area. Repair stucco on the front posts - include in the cost of the bid proposal.

6. INSTALL GABLE END BRACES IN ATTIC

3.00 EACH

INSTALL GABLE END BRACES IN ATTIC
Install gable end braces according to code.

7. CLOSE UP GABLE END VENT

1.00 EACH

CLOSE UP GABLE END VENT
Remove gable end vent and close up opening, ensuring that it matches surrounding material as closely as possible.

- Front of the house

9. INSTALL HARDIEBOARD GABLE ENDS

3.00 EACH

Install Lap Style Hardieboard gable ends

Remove gable vents, repair or remove any damaged wood on the gable ends. and install Lap style Hardieboard gable ends. Gable ends will be installed in accordance with current local and state building codes.

Materials + Labor

10. INSTALL NEW METAL ROOF ON ROOF DECKING (*)

2600.00 SF

INSTALL NEW METAL ROOFING (*)

Remove all existing shingles and underlayment down to roof decking. Install secondary water barrier and Energy Star qualified metal roofing and aluminum drip edge per manufacturer's specifications in compliance with the Florida Building Code. Roof color to be selected by Owner, but it must an in stock color offered for the Energy Star qualified dimensional metal roofing.

Bid price will include the cost of replacing 10 sheets of decking. If additional decking needs to be replaced, a change order may be submitted to cover this cost.

The Friendly City

CITY OF BRADENTON
Housing and Community Development Division
101 Old Main Street
Bradenton. Florida
Phone: (941) 932-9400

Homeowner Selection of Contractor

I, **Cynitha Knight,** along with **Dietra Barfield, Housing and Community Development Specialist,** have reviewed all the bids that were received by the City of Bradenton on my behalf for the rehabilitation of my home located at:

809 12th Street E. Bradenton, FL 34208

The bids that were received are as follows:

Herman Cadena	$38,760.00
Pinnacle Group	$69,329.00
Ellis Enterprises	$46,440.00

I, **Cynitha Knight** select the following contractor and bid to be awarded the contract to rehabilitate my home. I further understand that any contractor that I select must be approved by the Housing and Community Development Manager who retains the right to reject any contractor.

Herman Cadena — **Contractor :**

38,760.00 — **Bid amount :**

Cynitha Knight — Signature

5-7-26 — Date

AGENDA ITEM NO. 6.c

Item Cover Page

CITY COUNCIL MEETING AGENDA ITEM REPORT

DATE: May 27, 2026

SUBMITTED BY: Kelly Thomas, Event Review Committee

ITEM TYPE: Special Event

AGENDA SECTION: CONSENT AGENDA

SUBJECT: FIFA World Cup Block and Viewing Party

SUGGESTED ACTION: The Event Review Committee recommends approval with the following stipulations: 4 BPD Extra Duty Officers, 2 Public Works Extra Duty Staff, Event Notification Form, road closure signage to be posted a minimum of 24 hours prior to event, and compliance of all COB Special Event Standards.

Is this item Quasi-Judicial?
No

Does this item require a public hearing?
No

EXPLANATION:
Gold Coast Eagle is requesting approval for the FIFA World Cup Block Party to be held on June 12, 2026, on Old Main Street. The block party will feature a jumbotron and a band. All food and beverage sales will be through the downtown merchants.

FINANCIAL IMPACT:
N/A

ATTORNEY REVIEW/RECOMMENDATION:
N/A

SUGGESTED MOTION:
Motion to approve the FIFA World Cup Block Party event with the stipulations recommended by staff.

ATTACHMENTS:

Application and Site Plan

SPECIAL EVENT PERMIT APPLICATION

Application Information

Organization Name: Gold Coast Eagle Date of Application: 5/5/26

Contact Name: Joe Frasier Contact Phone 1: [redacted]

Contact Email: [redacted] Contact Phone 2: _____

Address: 7051 Wireless Court

City: Sarasota State: FL Zip: 34240

Event Information

Name of Event: FIFA World Cup Event Date: 6/12/26

Purpose of Event: Downtown Merchant Support

Description of Event: Block Party

Event Location: 12th Street - Old Main Street

If the event is to be held on the Riverwalk, please check the area(s) to be used.

Mosaic Amphitheater	Pavilion Area	Great Lawn
Regatta Plaza	Parking Lot Areas	Tower Plaza
Skate Park	Outdoor Living Room	Botanical Gardens
Volleyball Courts	Other (specify): Old main street	

	Date	Day	Start Time	End Time	Anticipated Attendance
Setup	6/12/26	Friday	5:00pm	6:30pm	
Event Day 1	6/12/26	Friday	6:30pm	11pm	500
Event Day 2					
Event Day 3					
Break Down	6/12/26	Friday	11pm	11:30pm	

Number of years event has been held: 0 Past Attendance: _____

(03/2022)

Is there a fee to attend the event? Yes No Is the event open to the public? Yes No

Will any tents be used for the event? Yes No

Tent Size	Number of Tents	Tent Location

Note: Tents must be weighted and stakes are prohibited. Tents larger than 10'x10' require an additional permit.

Will a stage be used for the event? Yes No

Will the event require electricity? Yes No Type of electrical power: _____

Will a generator be used? Yes No Size of generator: _____

Will gas equipment be used? Yes No Type of fuel source: _____

Vendor Information

Will the event offer food? Yes No

Where will the food be prepared? _____

Will cooking equipment be used? Yes No

Method/type of cooking equipment

Charcoal grills Food trucks Fryers Propane grills Warmers/Sternos

Will there be alcohol at the event? Yes No per event Sponsor.

Note: Alcohol will require an additional permit.

Event Entertainment

Will the event feature entertainment? Yes No Band

Will amplified sound equipment be used? Yes No

Will musical entertainment be used? Yes No

Please describe any type of entertainment and sound equipment.

_____

_____

Are fireworks planned? Yes No Note: Fireworks will require an additional permit.

Are live animals planned to be at the event? Yes No

Describe any additional event activities.

_____

_____

(03/2022)

Event Housekeeping

CITY SERVICES REQUESTED

Electricity Needed? Yes No

Solid Waste Service? Yes No

Contact: Electrical Department (941) 465-4923 and/or Sanitation (941) 708-6342

TEMPORARY SANITARY/PORTABLE TOILETS

Will temporary sanitary facilities be provided? Yes No

Please indicate how many and location on required site plan.

Event Security

NOTICE OF PUBLIC SAFETY NOTICE FOR SECURITY AND TRAFFIC CONTROL:

Bradenton Police Department security is required when alcoholic beverages are present, when closure of a public street is necessary, when large crowds are in attendance, or in any other situation as deemed necessary by the Bradenton Police Department. The number of personnel required is determined by the Bradenton Police Department and wages are payable by applicant.

Contact Bradenton Police Department Extra-Duty Employment Coordinator, Brenda Lovett, at 941-932-9317 or Brenda.Lovett@BradentonPD.com to discuss security requirements.

Street Closure

Is street closure requested? Yes No Note: Please complete the Street Closure Form.

Application Review

During the application review by the Event Review Committee, additional conditions may be imposed. This permit is valid only for the time indicated on this application. In the event that the applicant fails to fulfill the requirement(s) (as set forth in the permit) or fails to obtain proper authorization to proceed; if conditions have changed, or the expected outcomes, impacts, or conditions are substantially altered, then the permit will be voided immediately by authorized city personnel.

A non-refundable application fee of $25 shall be paid at the time of application. Rental fees and damage deposits will be paid following approval of the event request.

Please return application, rental contract, and site plan to Events at City of Bradenton, 101 Old Main Street, Bradenton, FL 34205 or via email to Events@bradentonFL.gov.

Rental Contract

All event organizers must read and sign the Rental Contract before the event permit is issued.

Levels of sound, music, and noise produced at the authorized event shall adhere to the city noise ordinance. If, at any time, a City of Bradenton law enforcement officer determines that this standard has been violated, said officer shall have the authority to require the event organizer, or any agent thereof, to take all necessary and appropriate actions to prevent further violations of this standard. If the event organizer or any agent thereof fails to obey the orders of the law enforcement officer, event organizer will be required to present any future events to City Council for review prior to approval.

The event organizer has been informed that all events at Riverwalk Park, including non-musical events, must be completely closed by 10:00 p.m. If any event wishes to continue past 10:00 p.m. Special City Council approval is required.

I, Joe Frazier, applicant/event organizer for Gold Coast Eagle (event), scheduled for (date&hours) June 12, 2026, from 5pm to 1130pm hereby agrees to all conditions and regulations set forth in the event guide, application, and contract as adopted by City Council.

Event 6:30pm–11pm

Signature of Applicant/Event Organizer

Gold Coast Eagle
Organization

Joe Frasier
Typed or Printed Name and Title

5/5/26
Date

RELEASE AND WAIVER OF LIABILITY AND INDEMNITY

I, the undersigned, will indemnify, defend, and hold harmless the City of Bradenton, its agents, employees, officers, and any and all other associated, from and against any and all actions, in law or in equity, from liability or claims for damages, demands, or judgement to any person or property which may result now or in the future from the conduct of this event.

The undersigned agrees to abide by all Event Approval Standards set forth in the guide.

The undersigned has read and voluntarily signed the Release and Waiver of Liability and Indemnity Agreement, and further agrees that no oral representations, statements, or inducements apart from the foregoing written agreement have been made.

Signature of Applicant/Event Organizer

Gold Coast Eagle
Organization

Joe Frasier
Typed or Printed Name and Title

5/5/26
Date

(03/2022)

CITY OF BRADENTON
SPECIAL EVENT REQUEST
FOR TEMPORARY CLOSING OF CITY STREET(S)

Name of Requestor: Joe Frazier

Name of Organization: Gold Coast Eagle Distributing

Street Address: 7051 Wireless Ct

City: Sarasota State: FL Zip: 34240

Telephone: [redacted] Email: [redacted]

Name of Event: FIFA World Cup

Start Date: 6/12/26 End Date: 6/12/26 Start Time: 5pm End Time: 11:00pm Event
Breakdown — 11pm-1130pm

Proposed roads to close (specific locations, include map):

Old main street from Manatee Ave to 3rd Av.

Proposed detour route (include alternative road and map):

Additional notes and comments:

(03/2022)

FIFA WORLD CUP
USA KICKOFF – Friday June 12, 2026

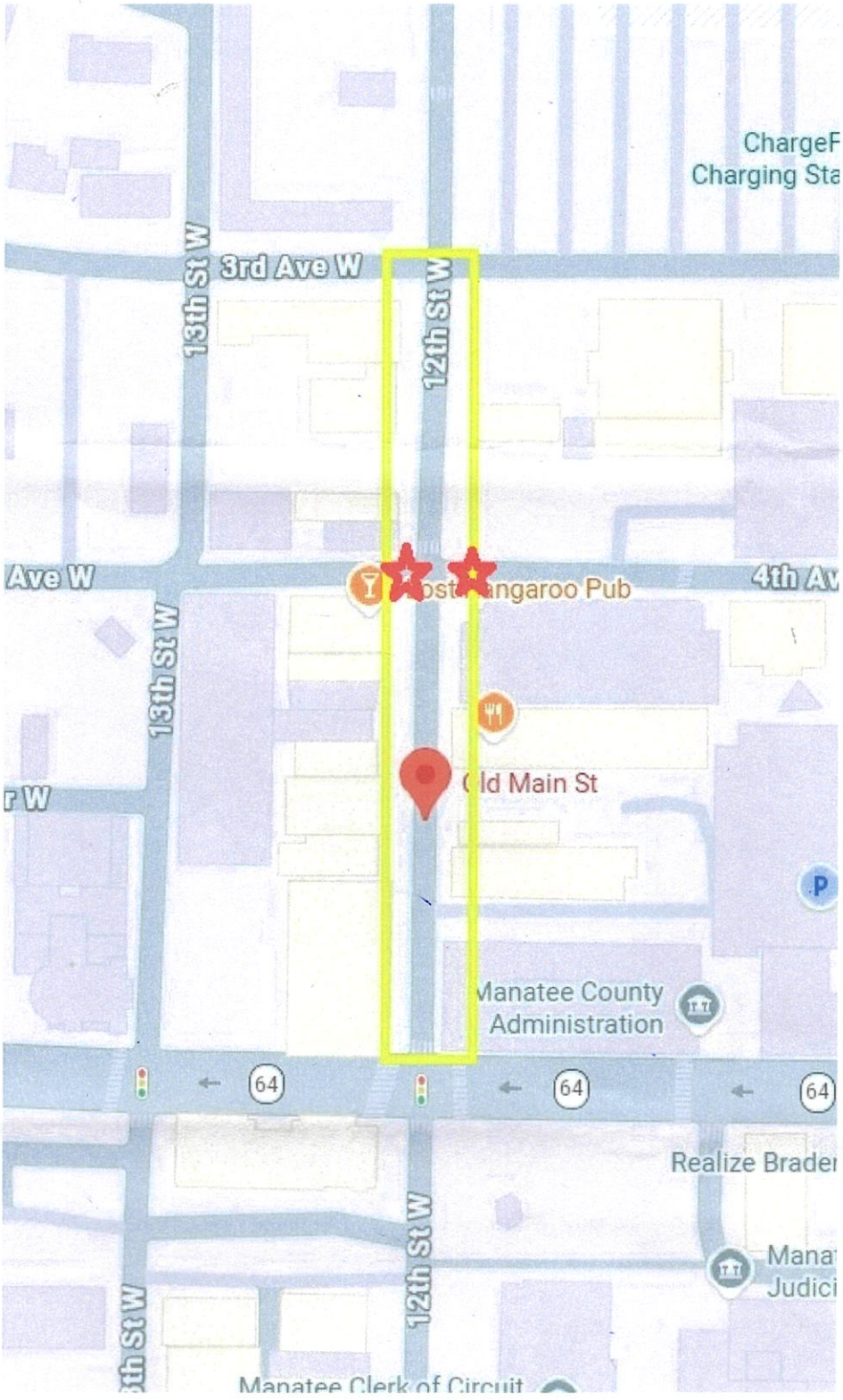

Closed area

Stage and jumbotron

AGENDA ITEM NO. 6.d

Item Cover Page

CITY COUNCIL MEETING AGENDA ITEM REPORT

DATE: May 27, 2026

SUBMITTED BY: Kelly Thomas, Event Review Committee

ITEM TYPE: Special Event

AGENDA SECTION: CONSENT AGENDA

SUBJECT: Save Our Sons Walk-a-Thon

SUGGESTED ACTION: The Event Review Committee recommends approval with the following stipulations: 1 Public Works Sanitation staff, 1 Public Works Parks staff and compliance of all COB Special Event Standards.

Is this item Quasi-Judicial?
No

Does this item require a public hearing?
No

EXPLANATION:
Loving Hands Ministry is requesting approval to host their Save Our Sons Walk-a-Thon on August 8, 2026, at Riverwalk Pavilion. The event will feature a walk-a-thon around the Pavilion area, speakers and music. They have an expectation of 200 people.

FINANCIAL IMPACT:
N/A

ATTORNEY REVIEW/RECOMMENDATION:
N/A

SUGGESTED MOTION:
Motion to approve Save-Our-Sons Walk-a-thon event with the stipulations recommended by staff.

ATTACHMENTS:
Application and Site Plan

SPECIAL EVENT PERMIT APPLICATION

Application Information

Organization Name: Loving Hands Ministry Date of Application: 28MAR2026

Contact Name: Benjamin Meyers Contact Phone 1: [redacted]

Contact Email: [redacted] Contact Phone 2: _____

Address: 9511 36th AVE E

City: Palmetto State: FL Zip: 34221

Event Information

Name of Event: Save-our-Sons (walk-a-thon) Event Date: 08AUG2026

Purpose of Event: Raise awareness for our Ministry

Description of Event: Speaking, Music, and walking

Event Location: Rossi Park (Pavilion & Event Area)

If the event is to be held on the Riverwalk, please check the area(s) to be used.

Mosaic Amphitheater	Pavilion Area	Great Lawn
Regatta Plaza	Parking Lot Areas	Tower Plaza
Skate Park	Outdoor Living Room	Botanical Gardens
Volleyball Courts	Other (specify): Rossi Park (Pavilion & Event area)	

	Date	Day	Start Time	End Time	Anticipated Attendance
Setup	08AUG2026	Saturday	8:00am	10:00am	[redacted]20
Event Day 1	08AUG2026	Saturday	8:00am	1:00pm	199
Event Day 2					
Event Day 3					
Break Down					

Number of years event has been held: Ø Past Attendance: Ø

(03/2022)

Is there a fee to attend the event? Yes (No) Is the event open to the public? (Yes) No

Will any tents be used for the event? (Yes) No

Tent Size	Number of Tents	Tent Location
10' x 10'	3	Pavilion Area

Note: Tents must be weighted and stakes are prohibited. Tents larger than 10'x10' require an additional permit.

Will a stage be used for the event? (Yes) No

Will the event require electricity? (Yes) No Type of electrical power: _____

Will a generator be used? Yes (No) Size of generator: _____

Will gas equipment be used? Yes (No) Type of fuel source: _____

Vendor Information

Will the event offer food? (Yes) No

Where will the food be prepared? At home

Will cooking equipment be used? Yes (No)

Method/type of cooking equipment

Charcoal grills Food trucks Fryers Propane grills Warmers/Sternos

Will there be alcohol at the event? Yes (No)

Note: Alcohol will require an additional permit.

Event Entertainment

Will the event feature entertainment? (Yes) No

Will amplified sound equipment be used? (Yes) No

Will musical entertainment be used? (Yes) No

Please describe any type of entertainment and sound equipment.

Keyboard, Singing, Speaking

Are fireworks planned? Yes (No) Note: Fireworks will require an additional permit.

Are live animals planned to be at the event? Yes (No)

Describe any additional event activities.

(03/2022)

Event Housekeeping

CITY SERVICES REQUESTED

Electricity Needed? Yes No

Solid Waste Service? Yes No

Contact: Electrical Department (941) 465-4923 and/or Sanitation (941) 708-6342

TEMPORARY SANITARY/PORTABLE TOILETS

Will temporary sanitary facilities be provided? Yes No

Please indicate how many and location on required site plan.

Event Security

NOTICE OF PUBLIC SAFETY NOTICE FOR SECURITY AND TRAFFIC CONTROL:

Bradenton Police Department security is required when alcoholic beverages are present, when closure of a public street is necessary, when large crowds are in attendance, or in any other situation as deemed necessary by the Bradenton Police Department. The number of personnel required is determined by the Bradenton Police Department and wages are payable by applicant.

Contact Bradenton Police Department Extra-Duty Employment Coordinator, Brenda Lovett, at 941-932-9317 or Brenda.Lovett@BradentonPD.com to discuss security requirements.

Street Closure

Is street closure requested? Yes No Note: Please complete the Street Closure Form.

Application Review

During the application review by the Event Review Committee, additional conditions may be imposed. This permit is valid only for the time indicated on this application. In the event that the applicant fails to fulfill the requirement(s) (as set forth in the permit) or fails to obtain proper authorization to proceed, if conditions have changed, or the expected outcomes, impacts, or conditions are substantially altered, then the permit will be voided immediately by authorized city personnel.

A non-refundable application fee of $25 shall be paid at the time of application. Rental fees and damage deposits will be paid following approval of the event request.

Please return application, rental contract, and site plan to Events at City of Bradenton, 101 Old Main Street, Bradenton, FL 34205 or via email to Events@bradentonFL.gov.

Rental Contract

All event organizers must read and sign the Rental Contract before the event permit is issued.

Levels of sound, music, and noise produced at the authorized event shall adhere to the city noise ordinance. If, at any time, a City of Bradenton law enforcement officer determines that this standard has been violated, said officer shall have the authority to require the event organizer, or any agent thereof, to take all necessary and appropriate actions to prevent further violations of this standard. If the event organizer or any agent thereof fails to obey the orders of the law enforcement officer, event organizer will be required to present any future events to City Council for review prior to approval.

The event organizer has been informed that all events at Riverwalk Park, including non-musical events, must be completely closed by 10:00 p.m. If any event wishes to continue past 10:00 p.m. Special City Council approval is required.

I, Benjamin Meyers, applicant/event organizer for Walk-a-thon (event), scheduled for (date&hours), 08AUG2026, from 8:00AM to 1:00PM, hereby agrees to all conditions and regulations set forth in the event guide, application, and contract as adopted by City Council.

Ben T Meyers — Signature of Applicant/Event Organizer

Loving Hands Ministry — Organization

Benjamin Meyers Support Staff — Typed or Printed Name and Title

20MAR2026 — Date

RELEASE AND WAIVER OF LIABILITY AND INDEMNITY

I, the undersigned, will indemnify, defend, and hold harmless the City of Bradenton, its agents, employees, officers, and any and all other associated, from and against any and all actions, in law or in equity, from liability or claims for damages, demands, or judgement to any person or property which may result now or in the future from the conduct of this event.

The undersigned agrees to abide by all Event Approval Standards set forth in the guide.

The undersigned has read and voluntarily signed the Release and Waiver of Liability and Indemnity Agreement, and further agrees that no oral representations, statements, or inducements apart from the foregoing written agreement have been made.

Ben T Meyers — Signature of Applicant/Event Organizer

Loving Hands Ministry — Organization

Benjamin Meyers Support Staff — Typed or Printed Name and Title

20MAR2026 — Date

(03/2022)

Site Plan

Google Maps Riverwalk

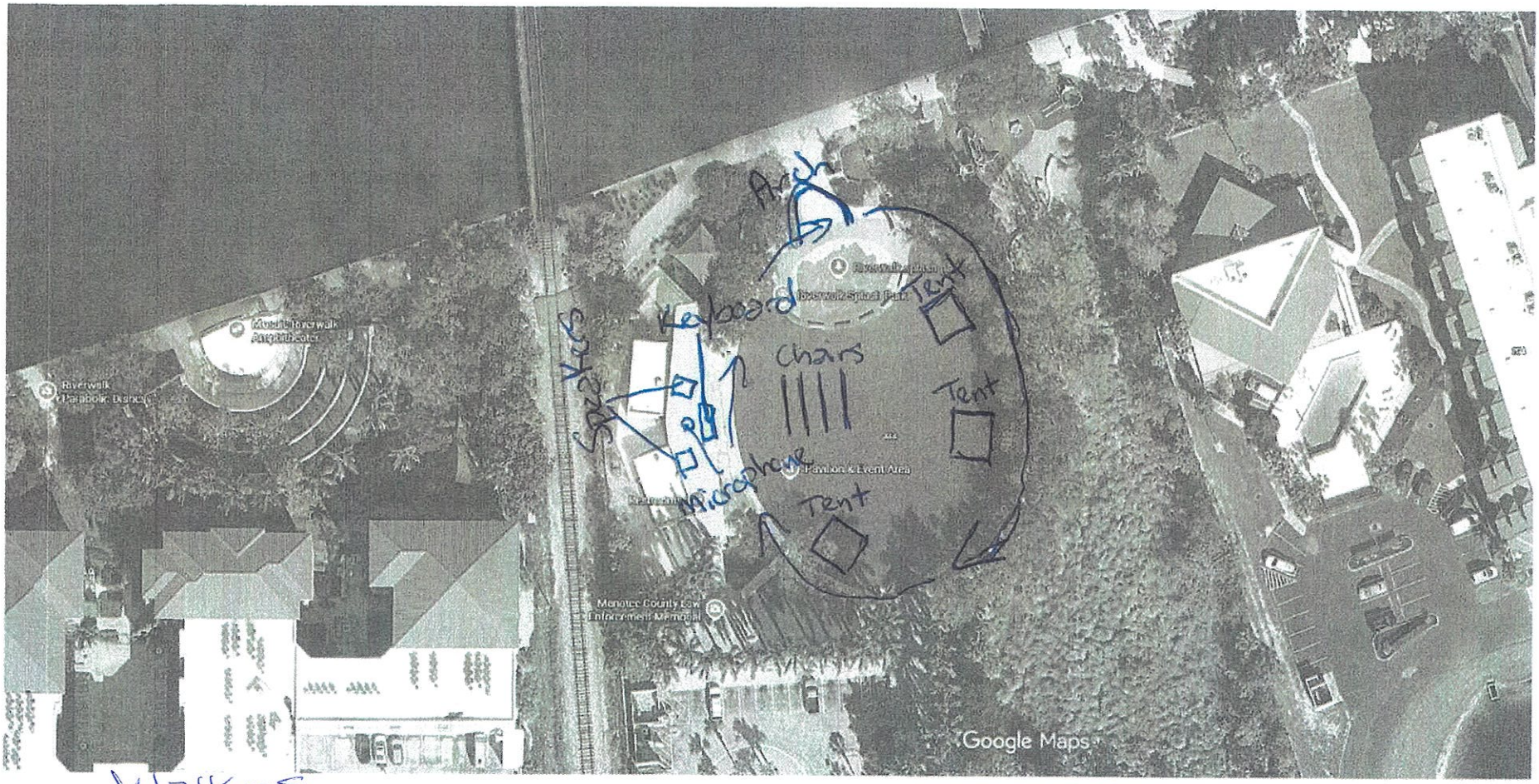

Imagery ©2026 Airbus, Vexcel Imaging US, Inc., Map data ©2026 Google 50 ft

Walkers
We will be staying within the Pavilion park area.
See circular path.

Save-Our-Sons 8/8/26
Walk-a-thon

AGENDA ITEM NO. 6.e

Item Cover Page

CITY COUNCIL MEETING AGENDA ITEM REPORT

DATE: May 27, 2026

SUBMITTED BY: Kelly Thomas, Event Review Committee

ITEM TYPE: Special Event

AGENDA SECTION: CONSENT AGENDA

SUBJECT: The Big Father's Day 5K

SUGGESTED ACTION: The Event Review Committee recommends approval with stipulations: 3 BPD Extra Duty Officers, 1 Public Works Sanitation staff, 3 Port-o-Lets, and compliance of all COB Special Event Standards.

Is this item Quasi-Judicial?
No

Does this item require a public hearing?
No

EXPLANATION:
Big Bill Foundation is requesting approval to host The Big Father's Day 5K on June 20, 2026, at Riverwalk Park. The fundraising event will feature a 5K and 1-mile fun run. There will be food trucks, kid activities and a D.J. providing entertainment. The event has an expectation of 150-200 attendees. The event will require a road closure on Riverside Drive East and 6th Street East. This is the approved COB Race Route.

FINANCIAL IMPACT:
N/A

ATTORNEY REVIEW/RECOMMENDATION:
N/A

SUGGESTED MOTION:
Motion to Approve The Big Father's Day 5K event with the stipulations recommended by staff.

ATTACHMENTS:

Application and Site Plan

SPECIAL EVENT PERMIT APPLICATION

Application Information

Organization Name: BIG BILL FOUNDATION, INC. Date of Application: 04/10/2026

Contact Name: ANASTASIA COBB-TRUDELL Contact Phone 1: [redacted]

Contact Email: [redacted] Contact Phone 2: _____

Address: 311 Manatee Avenue W

City: Bradenton. State: FL Zip: 34205

Event Information

Name of Event: The Big Father's Day 5K Event Date: 06/20/2026

Purpose of Event: Fundraising 5K + 1 Mile Fun-Run/Walk

Description of Event: Fundraising 5K + 1 Mile Fun-Run/Walk

Event Location: COB Approved Race Course (adjusted), Regatta Plaza + Areas nearby

If the event is to be held on the Riverwalk, please check the area(s) to be used.

Mosaic Amphitheater	Pavilion Area	Great Lawn
(Regatta Plaza)	Parking Lot Areas	Tower Plaza
Skate Park	Outdoor Living Room	Botanical Gardens
Volleyball Courts	(Other) (specify): Parking Spots + Grassy Area near there	

	Date	Day	Start Time	End Time	Anticipated Attendance
Setup	6/20/2026	Saturday	4AM	6:30AM	
Event Day 1	6/20/2026	Saturday	7AM	10AM	150-200
Event Day 2					
Event Day 3					
Break Down	6/20/2026	Saturday	10AM	12PM	

Number of years event has been held: 1 Past Attendance: 152

(03/2022)

Is there a fee to attend the event? Yes (No) Is the event open to the public? (Yes) No

Will any tents be used for the event? (Yes) No

Tent Size	Number of Tents	Tent Location
10x10 Tents	7-12 Tents	Regatta Plaza + Grassy Area

Note: Tents must be weighted and stakes are prohibited. Tents larger than 10'x10' require an additional permit.

Will a stage be used for the event? Yes (No)

Will the event require electricity? (Yes) No Type of electrical power: Electric + Gas Generators

Will a generator be used? (Yes) No Size of generator: 2200 W

Will gas equipment be used? (Yes) No Type of fuel source: Generators + ATV/Golf Cart

Vendor Information

Will the event offer food? (Yes) No

Where will the food be prepared? Either onsite in a food Truck or off site

Will cooking equipment be used? (Yes) No (TBD)

Method/type of cooking equipment

Charcoal grills (Food trucks) Fryers Propane grills Warmers/Sternos TBD

Will there be alcohol at the event? Yes (No)

Note: Alcohol will require an additional permit.

Event Entertainment

Will the event feature entertainment? (Yes) No

Will amplified sound equipment be used? (Yes) No

Will musical entertainment be used? (Yes) No

Please describe any type of entertainment and sound equipment.

DJ Speakers for announcements, warm up Music. TBD kid activities/water activities

Are fireworks planned? Yes (No) Note: Fireworks will require an additional permit.

Are live animals planned to be at the event? (Yes) No

Describe any additional event activities.

Leashed Dogs

(03/2022)

Event Housekeeping

CITY SERVICES REQUESTED

Electricity Needed? Yes (No)

Solid Waste Service? (Yes) No

Contact: Electrical Department (941) 465-4923 and/or Sanitation (941) 708-6342

TEMPORARY SANITARY/PORTABLE TOILETS

Will temporary sanitary facilities be provided? (Yes) No

Please indicate how many and location on required site plan. 3 (1 ADA compliant)

Event Security

NOTICE OF PUBLIC SAFETY NOTICE FOR SECURITY AND TRAFFIC CONTROL:

Bradenton Police Department security is required when alcoholic beverages are present, when closure of a public street is necessary, when large crowds are in attendance, or in any other situation as deemed necessary by the Bradenton Police Department. The number of personnel required is determined by the Bradenton Police Department and wages are payable by applicant.

Contact Bradenton Police Department Extra-Duty Employment Coordinator, Brenda Lovett, at 941-932-9317 or Brenda.Lovett@BradentonPD.com to discuss security requirements.

Street Closure

Is street closure requested? (Yes) No Note: Please complete the Street Closure Form.

Application Review

During the application review by the Event Review Committee, additional conditions may be imposed. This permit is valid only for the time indicated on this application. In the event that the applicant fails to fulfill the requirement(s) (as set forth in the permit) or fails to obtain proper authorization to proceed, if conditions have changed, or the expected outcomes, impacts, or conditions are substantially altered, then the permit will be voided immediately by authorized city personnel.

A non-refundable application fee of $25 shall be paid at the time of application. Rental fees and damage deposits will be paid following approval of the event request.

Please return application, rental contract, and site plan to Events at City of Bradenton, 101 Old Main Street, Bradenton, FL 34205 or via email to Events@bradentonFL.gov.

Rental Contract

All event organizers must read and sign the Rental Contract before the event permit is issued.

Levels of sound, music, and noise produced at the authorized event shall adhere to the city noise ordinance. If, at any time, a City of Bradenton law enforcement officer determines that this standard has been violated, said officer shall have the authority to require the event organizer, or any agent thereof, to take all necessary and appropriate actions to prevent further violations of this standard. If the event organizer or any agent thereof fails to obey the orders of the law enforcement officer, event organizer will be required to present any future events to City Council for review prior to approval.

The event organizer has been informed that all events at Riverwalk Park, including non-musical events, must be completely closed by 10:00 p.m. If any event wishes to continue past 10:00 p.m. Special City Council approval is required.

I, ANASTASIA COBB-TRUDELL, applicant/event organizer for The Big Fathers Day 5K (event), scheduled for (date&hours), 06/20/2026, from 7AM to 10AM, hereby agrees to all conditions and regulations set forth in the event guide, application, and contract as adopted by City Council.

Signature of Applicant/Event Organizer

Big Bill Foundation, Inc.
Organization

ANASTASIA COBB-TRUDELL
Typed or Printed Name and Title

04/10/2026
Date

RELEASE AND WAIVER OF LIABILITY AND INDEMNITY

I, the undersigned, will indemnify, defend, and hold harmless the City of Bradenton, its agents, employees, officers, and any and all other associated, from and against any and all actions, in law or in equity, from liability or claims for damages, demands, or judgement to any person or property which may result now or in the future from the conduct of this event.

The undersigned agrees to abide by all Event Approval Standards set forth in the guide (see pages 7 to 9).

The undersigned has read and voluntarily signed the Release and Waiver of Liability and Indemnity Agreement, and further agrees that no oral representations, statements, or inducements apart from the foregoing written agreement have been made.

Signature of Applicant/Event Organizer

Big Bill Foundation, Inc.
Organization

ANASTASIA COBB-TRUDELL
Typed or Printed Name and Title

04/10/2026
Date

(03/2022)

CITY OF BRADENTON
SPECIAL EVENT REQUEST
FOR TEMPORARY CLOSING OF CITY STREET(S)

Name of Requestor: ANASTASIA COBB-TRUDELL

Name of Organization: BIG BILL FOUNDATION INC.

Street Address: 311 Manatee Ave W

City: Bradenton State: FL Zip: 34205

Telephone: [redacted] Email: [redacted]

Name of Event: Big Father's Day 5K

Start Date: 06/20/26 End Date: 06/20/26 Start Time: 7 End Time: 9:30/10

Proposed roads to close (specific locations, include map):

Riverside Drive East from Waterfront drive through 6th Street East until it hits Manatee Ave East

Proposed detour route (include alternative road and map):

Still able to access neighborhood via all other streets

Additional notes and comments:

Road will reopen as soon as the final 5K runner is on the Riverwalk

(03/2022)

5K Route Map

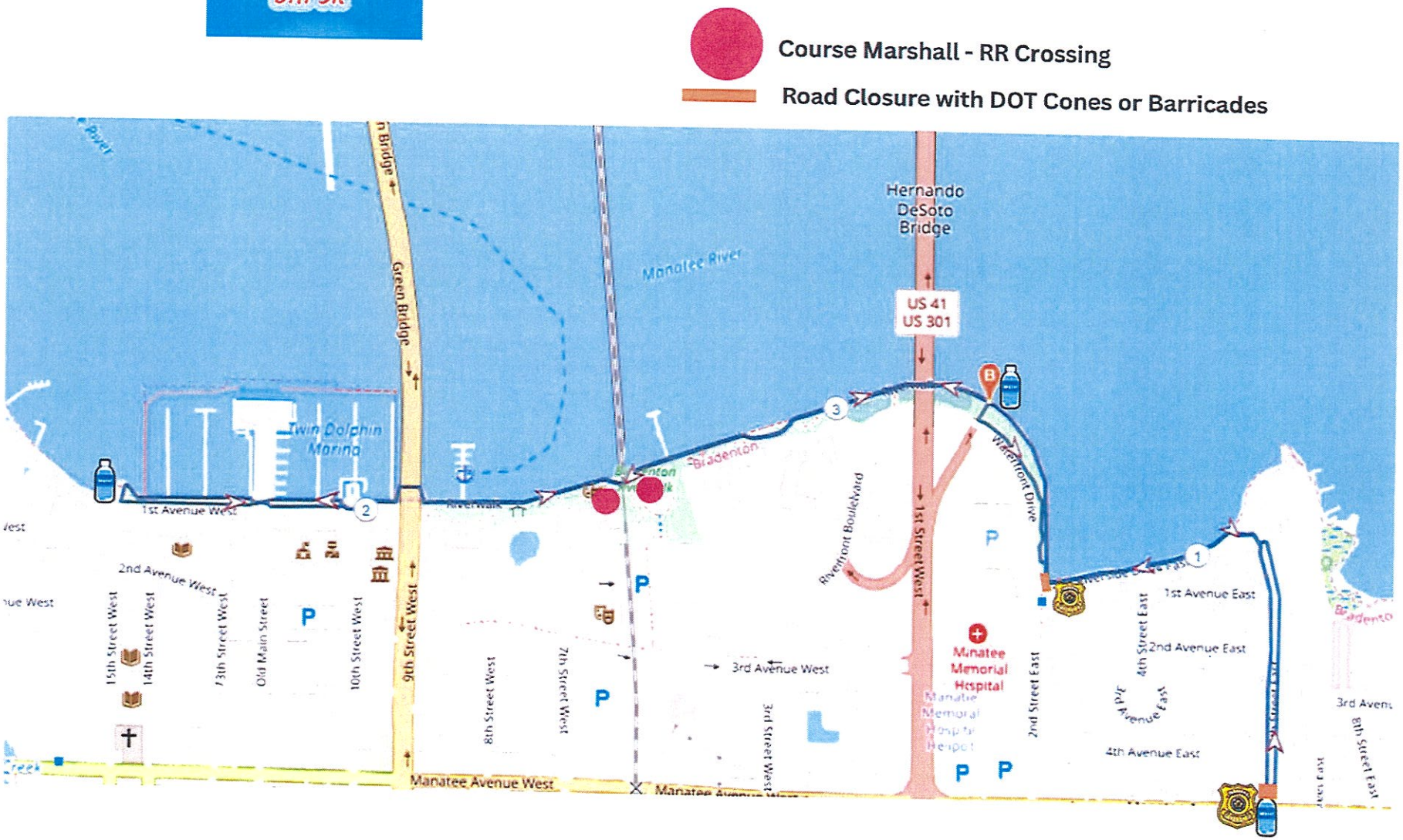
Course Marshall - RR Crossing
Road Closure with DOT Cones or Barricades
Hernando DeSoto Bridge
Manatee River
US 41
US 301
Green Bridge
9th Street West
Twin Dolphin Marina
1st Avenue West
2nd Avenue West
15th Street West
14th Street West
13th Street West
Old Main Street
10th Street West
8th Street West
7th Street West
3rd Street West
3rd Avenue West
Riverwalk Boulevard
1st Street West
Bradenton
Riverfront Drive
Manatee Memorial Hospital
2nd Street East
1st Avenue East
2nd Avenue East
3rd Ave E
4th Street East
4th Avenue East
3rd Avenue
8th Street East
Manatee Avenue West

1 Mile Route Map

Course Marshall - RR Crossing

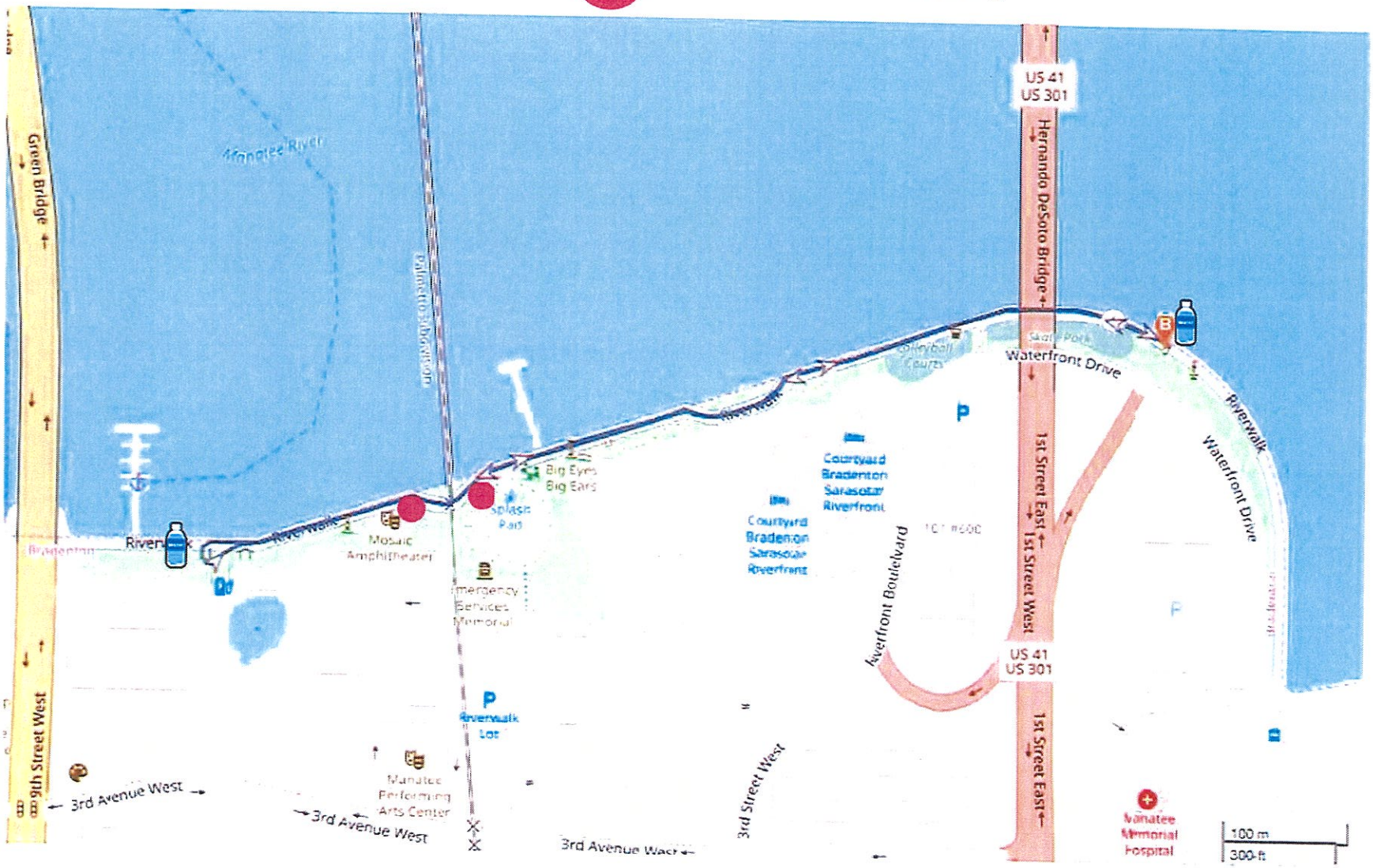

Site Map

10x10
Tent

AGENDA ITEM NO. 6.f

Item Cover Page

CITY COUNCIL MEETING AGENDA ITEM REPORT

DATE: May 27, 2026

SUBMITTED BY: Kelly Thomas, Legislative

ITEM TYPE: Resolution

AGENDA SECTION: CONSENT AGENDA

SUBJECT: Resolution 26-47 - Affordable Housing Advisory Committee Appointment

SUGGESTED ACTION: Approval and Confirmation

Is this item Quasi-Judicial?
No

Does this item require a public hearing?
No

EXPLANATION:
A resolution appointing Cecilia Grace to the Affordable Housing Advisory Committee and defining her term.

FINANCIAL IMPACT:
N/A

ATTORNEY REVIEW/RECOMMENDATION:
N/A

SUGGESTED MOTION:
Motion to approve Resolution 26-47.

ATTACHMENTS:
Resolution 26-47

RESOLUTION NUMBER 26-47

A RESOLUTION APPOINTING **CECILIA GRACE** TO THE **AFFORDABLE HOUSING ADVISORY COMMITTEE** FOR THE CITY OF BRADENTON, FLORIDA AND DEFINING HER TERM.

WHEREAS, the City is desirous of appointing outstanding members of the community to this board.

NOW, THEREFORE, BE IT RESOLVED BY THE CITY COUNCIL OF THE CITY OF BRADENTON, FLORIDA, THAT:

The Mayor does hereby appoint, and the City Council approves and confirms the appointment from this date hereof:

CECILIA GRACE for a term to expire May 2028.

PASSED AND DULY ADOPTED, BY THE CITY COUNCIL OF THE CITY OF BRADENTON, FLORIDA, with a quorum present and voting, this 27th day of May, 2026.

ATTEST:

_____
Tamara Melton
City Clerk

_____
Gene Brown
Mayor

APPROVED AS TO FORM:

_____
Scott Rudacille
City Attorney

AGENDA ITEM NO. 6.g

Item Cover Page

CITY COUNCIL MEETING AGENDA ITEM REPORT

DATE: May 27, 2026

SUBMITTED BY: Jamie Schindewolf, Planning & Community Development

ITEM TYPE: Resolution

AGENDA SECTION: CONSENT AGENDA

SUBJECT: Resolution 26-28 - Denial for the Application PLN-MAJ-26-0001 for a Major Amendment to the Jordan Creek East Planned Development Plan

SUGGESTED ACTION: Approval of Resolution 26-28.

Is this item Quasi-Judicial?
No

Does this item require a public hearing?
No

EXPLANATION:
On May 13, 2026, the City Council voted (5-0) to deny the request for a Major PDP Amendment for Jordan Creek East based on failure of the property owner to meet its burden of demonstrating that its request to significantly increase the approved density of the project through the Amendment was supported by the criteria of Section 3.4.1.3.a.i. of the City of Bradenton Land Use Regulations, as further described below:

1. The Property Owner failed to demonstrate quality of design to justify the additional density request. The site plan was largely unchanged from the existing, approved plan, which provided for significantly less density. The Amendment also sought to reduce the required perimeter landscaped buffer below the Code required 25’.

2. The Property Owner failed to address contributions to public facilities.

3. The limited open space and recreation area proposed was unchanged from the existing, approved plan and did not justify the requested increase in density.

4. The proposed density of the Amendment significantly exceeds that of adjoining single-family detached residential lots, and compatibility is further compromised by the request for a reduced landscaped buffer.

FINANCIAL IMPACT:
N/A

ATTORNEY REVIEW/RECOMMENDATION:
Reviewed by City Attorney Rudacille.

SUGGESTED MOTION:
Motion to approve Resolution 26-28.

ATTACHMENTS:
Resolution 26-28

RESOLUTION 26-28

A RESOLUTION OF THE CITY COUNCIL OF THE CITY OF BRADENTON DENYING APPLICATION PLN-MAJ-26-0001 FOR A MAJOR AMENDMENT TO THE JORDAN CREEK EAST PLANNED DEVELOPMENT PLAN (PDP-23-4841) TO APPROVE AN ADDITIONAL DEVELOPMENT OPTION FOR THE PROPERTY LOCATED AT 1201 27TH STREET EAST AND 2906 11TH AVENUE EAST (PARCEL ID NUMBERS 1387000050 AND 1387200007), MORE PARTICULARLY DESCRIBED HEREIN; OPTION A IS A PDP SITE PLAN FOR 66 SEMIDETACHED RESIDENTIAL UNITS AS APPROVED WITH ORDINANCE 4027; OPTION B IS A PDP SITE PLAN FOR 106 TOWNHOME UNITS; PROVIDING FOR SEVERABILITY; AND PROVIDING FOR AN EFFECTIVE DATE.

WHEREAS, Jordan Creek at Bradenton East, LLC owns the properties located 1201 27th Street East and 2906 11th Avenue East, consisting of 12.19 acres, as legally described in Exhibit "A" attached hereto (collectively, the "Property"); and

WHEREAS, In 2024, a rezoning to Planned Development Project was approved for the Property as PDP-23-4841 and included 66 single-family semi-detached (duplex) dwelling units; and

WHEREAS, Pape-Dawson, agent for Jordan Creek at Bradenton East, LLC ("Applicant"), submitted a Major Planned Development Project Amendment to add an additional development option to the approved Planned Development for 106 single-family attached (townhome) dwelling units (the "Amendment"); and

WHEREAS, the City of Bradenton's LPA held a public hearing on April 15, 2026 to consider the proposed Amendment; and

WHEREAS, the LPA having reviewed and considered all comments received during said hearing, found that the Amendment furthers the goals, objectives and policies of the City's Comprehensive Plan and recommended said Amendment to the City Council for approval with stipulations; and

WHEREAS, the LPA determined that the Project as proposed, and as further described in the Staff Report presented at the public hearing on April 15, 2026, is consistent with the Comprehensive Plan and meets the criteria for approval under the Land Use Regulations;and

WHEREAS, the LPA voted 5-1 to recommend approval of the Project as proposed; and

WHEREAS, the City Council held a noticed public hearing on May 13, 2026, at which the Council received testimony and evidence from City Planning staff and members of the public in attendance regarding the Amendment.

NOW, THEREFORE, the City Council makes the following Findings of Fact and Conclusions of Law and issues the Final Order as follows:

Section 1. Findings of Fact and Conclusions of Law. After considering the evidence on the record and that presented at public hearing, including the staff report, the City Council hereby makes the following Findings of Fact and Conclusions of Law:

a. The Whereas clauses contained herein are hereby adopted as Findings of Fact.

b. The Property Owners are requesting approval of a secondary development option, with a conceptual plan hereto attached hereto as Exhibit "B".

c. The Amendment proposes to increase the allowable density of the project from 5.4 DU/ac to 8.7 DU/ac and allow for townhome units and to reduce the required perimeter landscaped buffer from 25' to 20'.

d. The majority of the land adjoining the Property consists of single-family detached residential lots.

e. The existing, approved site plan already exceeds the density of surrounding single-family detached residential lots and allows for single-family semi-detached (duplex) dwelling units.

f. Section 3.4.1 provides that the PDP standards are geared to allowing developers maximum flexibility in designing higher quality, more innovative projects that might not otherwise be permitted through these LURs.

g. Section 3.4.1 provides that in order to be eligible for PDP consideration, the proposed development should generally exceed the standards in the Land Use Regulations and not merely circumvent them.

h. Section 3.4.1.3.a.vi. provides that a landscaped, well-designed perimeter buffer with a minimum or oscillating width of 25 feet from all property lines is required for all proposed residential PDPs, unless otherwise stipulated in the PDP approval.

i. Section 3.4.1.3.a.i. of the City of Bradenton Land Use Regulations provides that a density evaluation should consider quality of design,

contribution to public facilities, open space and recreation, preservation of resources and compatibility.

j. The Property Owner failed to meet its burden of demonstrating that its request to significantly increase the approved density of the project through the Amendment was supported by the criteria of Section 3.4.1.3.a.i. of the City of Bradenton Land Use Regulations, as further described below:

1. The Property Owner failed to demonstrate quality of design to justify the additional density request. The site plan was largely unchanged from the existing, approved plan, which provided for significantly less density. The Amendment also sought to reduce the required perimeter landscaped buffer below the Code required 25'.
2. The Property Owner failed to address contributions to public facilities.
3. The limited open space and recreation area proposed was unchanged from the existing, approved plan and did not justify the requested increase in density.
4. The proposed density of the Amendment significantly exceeds that of adjoining single-family detached residential lots, and compatibility is further compromised by the request for a reduced landscaped buffer.

Section 2. Order. Based upon the foregoing, the proposed Amendment is hereby denied.

Section 3. State and Federal Permits. Issuance of this development permit by the City does not in any way create any right on the part of the applicant to obtain a permit from a state or federal agency and does not create any liability on the part of the City for issuance of the permit if the applicant fails to obtain requisite approvals or fulfill the obligations imposed by a state or federal agency or undertakes actions that result in a violation of state or federal law. The applicant must obtain all applicable state and federal permits before commencing development or use.

Section 4. Severability. In the event that any portion or section of this Resolution is determined to be invalid, illegal or unconstitutional by a court of competent jurisdiction, such decisions shall in no manner affect the remaining portions or sections of the Resolution which shall remain in full force and effect.

Section 5. Effective Date. This Resolution shall be effective upon adoption.

ADOPTED WITH A QUORUM PRESENT AND VOTING BY THE CITY COUNCIL OF THE CITY OF BRADENTON this 27TH DAY OF MAY, 2026.

ATTEST:

Tamara Melton CITY CLERK	Gene Brown MAYOR

APPROVED AS TO FORM:

Scott Rudacille
CITY ATTORNEY

EXHIBIT "A"

1201 27th Street East (Parcel ID 1387000050)

ALL THAT CERTAIN PLAT, PIECE OF PARCEL OF LAND KNOWN AND DESC AS THE SW1/4 OF THE NW1/4 OF THE NW1/4 OF SEC 32, LESS & EXCEPT 30 FT OFF THE S SIDE FOR RR R/W; TOGETHER WITH ALL OF BLK 3, AND ALL OF BLK 4, SOUTH BRADEN CASTLE CAMP PER PLAT REC IN PB 2 P 144, ALSO THAT PART OF VACATED 3RD ST E, LYING ADJ TO BLK 3, AND THAT PART OF VAC 4TH ST E, LYING BETWEEN BLKS 3 & 4 AND THAT PART OF THE N1/2 OF VAC JACKSON ST LYING S OF AND ADJ TO BLKS 3 & 4, AS VAC BY RESOL REC IN (1389/3660), SUBJ TO MAINTAINED R/W (1497/3923); TOGETHER WITH VACATED STREET LYING E OF & ADJ TO THE ABOVE DESC PARCEL PER ORD #3085 REC IN INST#202141140894 & CORR IN INST#202241042035. PI#13870.0005/0

2906 11th Avenue East (Parcel ID 1387200007)

LOTS 1 THRU 14 BLK 5 SOUTH BRADEN CASTLE CAMP, ALSO THE W1/2 OF VACATED STREET LYING BETWEEN BLKS 5&6 DESC (1194/1435); TOGETER WITH VACATED STREET LYING W & S OF & ADJ TO THE ABOVE DESC PARCEL PER ORD #3085 REC IN INST#202141140894 & CORR IN INST#202241042035. PI#13872.0000/7

EXHIBIT "B"

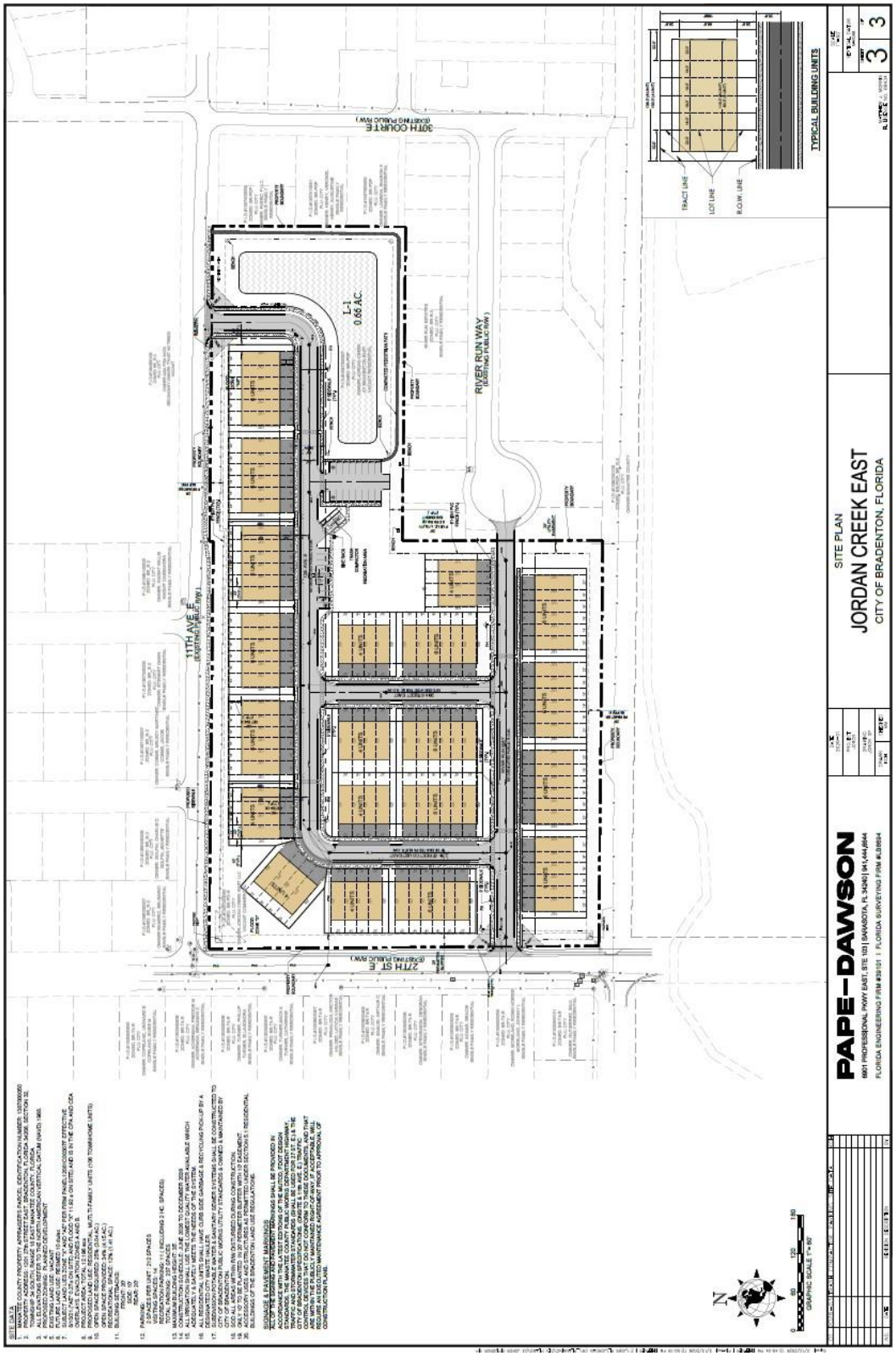

30TH COURT E
(EXISTING PUBLIC R/W)
RIVER RUN WAY
(EXISTING PUBLIC R/W)
11TH AVE E
(EXISTING PUBLIC R/W)
27TH ST E
(EXISTING PUBLIC R/W)
L-1
0.66 AC.
TYPICAL BUILDING UNITS
TRACT LINE
LOT LINE
R.O.W. LINE
SITE PLAN
JORDAN CREEK EAST
CITY OF BRADENTON, FLORIDA
PAPE-DAWSON

AGENDA ITEM NO. 6.h

Item Cover Page

CITY COUNCIL MEETING AGENDA ITEM REPORT

DATE: May 27, 2026

SUBMITTED BY: Jeremy Giddens, Police

ITEM TYPE: Agreement

AGENDA SECTION: CONSENT AGENDA

SUBJECT: 2026-2027 School Resource Officer Program Agreement

SUGGESTED ACTION: Approval

Is this item Quasi-Judicial?
No

Does this item require a public hearing?
No

EXPLANATION:

Agreement between the City of Bradenton and the Manatee County School Board for the 2026-2027 school year, aimed at maintaining the School Resource Program. School Resource Officers (SROs) will be assigned to Manatee High School, Manatee Elementary School, and Sugg Middle School. The Manatee County School Board will reimburse the City of Bradenton for 70% of the total expenses, amounting to $348,050.23, which includes salary and benefits.

FINANCIAL IMPACT:
70% salary and benefits reimbursed by the Manatee County School Board, with the remaining 30% from the Bradenton Police Department. These are not new positions and are currently budgeted.

ATTORNEY REVIEW/RECOMMENDATION:
Reviewed by Police Legal Advisor.

SUGGESTED MOTION:
Motion to approve 2026-2027 School Resource Officer Program Agreement.

ATTACHMENTS:
2026-2027 School Resource Officer Program Agreement

2026-2027 School Resource Officer Program Agreement

This AGREEMENT entered into for the 2026-2027 school year (July 1, 2026, through June 30, 2027) by and between THE SCHOOL BOARD OF MANATEE COUNTY, FLORIDA, body corporate, whose mailing address is 215 Manatee Avenue West, Bradenton, Florida 34205, hereinafter referred to as **"School Board"** and the City of Bradenton, whose mailing address is 100 10th Street West, Bradenton, Florida 34205, hereinafter referred to as the **"City of Bradenton,"** for the purposes of establishing a School Resource Officer Program, staffed by school resource officer, hereinafter referred to as **"SRO,"** within certain the public schools of the **City of Bradenton,** Florida.

WHEREAS, pursuant to Section 1006.12, Florida Statutes, the **School Board** has the responsibility to develop and implement programs for security purposes to be in effect during the school operating hours; and

WHEREAS, the **School Board** has the additional responsibility to provide educational services to the students of the City of Bradenton; and,

WHEREAS, the **City of Bradenton** has the responsibility for law enforcement, including the provisions of security services and programs for the prevention of crime; and

WHEREAS, the **School Board** and the **City of Bradenton** are mutually responsible for providing a safe environment within which students may receive appropriate instructional and educational services which can be delivered more efficiently through the cooperative efforts of said parties to the benefits of public health, safety, and welfare.

NOW, THEREFORE, the **School Board** and the **City of Bradenton** mutually agree as follows:

ARTICLE 1. CITY OF BRADENTON RESPONSIBILITIES

A. Providing School Resource Officers:

1. The **City of Bradenton** shall commit employed police officers to the School Resource Officer **(SRO)** program who will be available for certain schools within the **City of Bradenton's** jurisdiction.

B. Responsibilities:

1. The **City of Bradenton** shall be responsible for employing, training, disciplining, and dismissal of all **SRO's.**

2. The **City of Bradenton** shall be responsible for fully equipping the **SRO** with the necessary and required law enforcement equipment and apparel needed to perform the **SRO** functions within the school environment.

3. The **City of Bradenton** shall maintain all personnel records and other records related to law enforcement services delivered by the **SRO** as may be required or allowed by law including, but not limited to, individual **SRO** personnel records and files, incident reports, criminal investigative reports, citations, and other such documentations.

4. The **City of Bradenton** shall maintain control and responsibility over the **SRO** as well as their equipment and activities.

C. **SRO** Duty Hours:

1. For the Term of Agreement, each **SRO** shall work a forty-hour week consisting of 8-hour days, corresponding to the school calendar regular session, based upon the **SRO's** work detail.

2. The **SRO** workday shall correspond with the teachers' regular workday in the respective schools. Whenever needed, **SRO** may be temporarily reassigned by the **City of Bradenton** for accrued leave or during other periods for law enforcement purposes, another **SRO** will be assigned to the school. With approval of the **Chief's** chain-of-command and after consultation with the School Administrator, **SRO** will be allowed to request and utilize their annual leave throughout the year.

3. The schools may request the use of the **SRO** for overtime within each two-week period. Overtime will be paid directly to the **SRO** by the **City of Bradenton** and reimbursed to the **City of Bradenton** from the schools internal accounts or School District of Manatee County (SDMC)within 30 days of receipt of invoice.

D. Duties of the **SRO:**

1. The **SRO** shall act as an instructor for specialized, short-term programs at their respective schools when requested to do so by the principal or member of the faculty. The **SRO** may teach part of these programs as a guest lecturer when so requested, however, the **SRO** shall not be responsible for teaching of the program on a full-time basis.

2. The **SRO** is approved to teach the "Character Development" program, the "Crossroads, It's Your Choice" program, the G.R.E.A.T. (Gang Resistance Education and Training) program and the "Know the Law" program. All other programs must be approved by the principal of their respective schools.

E. General Responsibilities of **SRO:**

1. **SRO** shall coordinate all of their activities with the principal of their respective school and shall receive approval, advice and guidance prior to enacting any programs within said school that have not previously been established or approved under this Agreement.

2. **SRO** shall develop expertise in presenting various subjects to students which shall include a basic understanding of law, the role of law enforcement officers, and the law enforcement mission.

3. **SRO** shall encourage individual and group discussion with the students at their respective schools based upon materials presented in the classroom environment to further establish a rapport with those students.

4. The **SRO,** if requested by the principal of their respective school and available based on the duties and responsibilities of the **SRO,** shall attend parent/faculty meetings and student staffing, in order to solicit support and understanding of the **SRO** program from the faculty and parents and to promote awareness of the law enforcement function.

5. If available based on the duties and responsibilities of the **SRO,** the **SRO** shall make themselves available for student, parent, and faculty member conferences in order to assist with the identification of and solving of problems of a law enforcement or crime prevention nature. Any confidential information obtained, pursuant to Chapter 39, Florida Statutes, shall not be disclosed except as provided for by law or court order.

6. **SRO** shall become familiar with all community agencies which offer assistance to youths and their families, such as mental health clinics, drug treatment centers, and Community Based Programs. **SRO** shall make referrals when appropriate.

7. The **SRO** shall assist the principal in developing plans and strategies to prevent and/or minimize dangerous situations which may result from student unrest.

8. Should it become necessary to conduct formal police interviews or investigations with students, the **SRO** shall adhere to those legal requirement policies and procedures established by the **City of Bradenton** and the **School Board.** The **SRO** shall render assistance to other law enforcement officers in matters regarding the **SRO** school assignment.

9. The **SRO** shall not act as a school disciplinarian, school administrator, or assistant principal, but will cooperate and participate as necessary in the **School Board** expulsion hearing process, if requested by the Superintendent of Schools or legal counsel.

10. The **SRO** shall not be assigned duties regularly assigned to school staff such as lunchroom or hall monitor. If there is a problem area, the **SRO** may evaluate or assist the school staff in monitoring those areas.

11. The **SRO** shall adhere to the **City of Bradenton** policies and procedures when transporting citizens.

12. The **SRO** will follow and conform to all **School Board** policies and procedures that do not conflict with the established policies and procedures of the **City of Bradenton.**

13. The **SRO** shall take law enforcement actions as necessary and advisable under the circumstances involved in any situation occurring at the **SRO** school and, as soon as practicable, if not prohibited by confidentiality provisions of state law, the **SRO** shall notify the principal of the school to which the **SRO** is assigned of any law enforcement activity undertaken or ongoing on the school's campus.

14. At the principal's request and subject to availability based on the duties and responsibilities of the **SRO,** the **SRO** shall take appropriate law enforcement action against intruders, trespassers, and unwanted unauthorized individuals who may appear at school related functions. Whenever practicable, the **SRO** shall advise the principal before requesting additional law enforcement assistance on the campus.

15, If it is necessary for the **SRO** to be absent from his/her assigned school for a period of time less than a full workday or any portion thereof, the **SRO** shall contact the **SRO** supervisor and notify the principal. The **SRO** supervisor will then ensure that the school has a replacement **SRO** prior to the assigned **SRO** leaving campus.

16. **SROs** shall sign in and out at their assigned schools to document their presence at the school for purposes of the State of Florida Department of Education auditing requirements. The sign-in and sign-out form to be utilized for this purpose is attached hereto as attachment B.

17. **SRO** shall wear the official Police Uniform at all times while on duty as an **SRO;** however, appropriate civilian attire may be worn on those occasions mutually agreed upon, by and between the school principal and the **City of Bradenton** or their appropriate designee.

ARTICLE 2. SCHOOL BOARD RESPONSIBILITIES

A. Facilities and Materials:

The **School Board** shall provide each **SRO** the following facilities and materials necessary for the performance of the **SRO** functions:

1. An air conditioned, properly lighted private office with a seven (7) digit telephone for business purposes, a secure file cabinet, desk, chair, and appropriate office supplies, access to computer or secretarial assistance, access to copying equipment, and a portable 2-way radio for communications with other school personnel.

2. Access to the **School Board's** student information systems, to include, access to student information through Focus, as available, allowing remote access to information relating to all students enrolled at the **SRO's** assigned school, for the purpose of minimizing juvenile delinquency and truancy and maintaining student safety. Any information obtained by the **SROs** through such access shall be maintained confidential pursuant to the Family Educational Rights and Privacy Act and Section 1002.22, Florida Statutes (2025). The **SRO** supervisor to the extent it exists, shall have mobile access to surveillance cameras at all the schools located within the **City of Bradenton.**

3. The **School Board** shall appropriate such funds as may be necessary in order to provide each **SRO** for the school year, the ability, when authorized by the respective principal, to purchase supplies and other equipment or materials that are needed in the performance of the **SRO** function.

B. Training:

The City of Bradenton shall advise the School Board in writing of any permanent staff changes of School Resource Officers within schools, including but not limited to leaves of absence greater than 14 days, retirements, and reassignments. The School Board will be notified and required to consent to any staff reassignment.

The **School Board** upon written request and consent, shall reimburse the **City of Bradenton** its proportionate share (70%) of the reasonable costs of additional formal training expenses for **SRO** that have been requested and agreed to in advance by and between the **School Board** and the **City of Bradenton,** as being necessary for an assigned **SRO** to obtain or maintain certification as a School Resource Practitioner or other training necessary to fulfill the specific requirements of certification as a **SRO.** The reimbursement for agreed expenses

shall include, but not be limited to, registration, tuition, lodging, and meals, all in keeping with the applicable state guidelines. If mutually agreed upon in advance by the **School Board** and the **City of Bradenton, SRO** may be reimbursed for other SRO specific training expenses. The **School Board** shall reimburse the **City of Bradenton** for any **SRO** training mandated by statute.

C. Section 1006.13, Florida Statutes, Policy of zero tolerance for crime and victimization compliance:

The **School Board** shall ensure that any act that poses a threat to school safety, whether committed by a student or adult, are reported to the **SRO** assigned to the involved school or an **SRO supervisor.** The **SRO or SRO supervisor** will be the **Chief's** designee to handle any reported act(s) that poses a threat to school safety whether committed by a student or adult.

The **School Board** personnel shall immediately consult with the **SRO** or **SRO supervisor** concerning delinquent acts and crimes.

ARTICLE 3. GENERAL TERMS AND CONDITIONS

A. Each **SRO** shall be a certified law enforcement officer, within the State of Florida, employed by and responsible to the **City of Bradenton** and will not, under any circumstances be an employee of the **School Board** nor shall the **School Board** be liable for their actions.

B. The **SRO** in the exercise of their duties and responsibilities will coordinate those school activities and education curriculum involved in their duties with the Superintendent of Schools and the principal of their assigned school.

C. The **SRO** supervisor shall coordinate, in keeping with the policies of the **School Board** and after request the principal of the respective school subject to availability based on the duties and responsibilities of the **SRO,** the scheduling of **SRO** at extra-curricular activities, including after-school security activities for which special arrangements shall be made for compensation. Any such extra-curricular activities requested by the **School Board,** over and above the normal pay period, shall be in compliance with any applicable collective bargaining agreement and all applicable rules and regulations of the **City of Bradenton** and the Department of Labor under the Fair Labor Standards Act.

D. The **School Board** shall reimburse the **City of Bradenton** 70% of the rate of pay the School Resource Officers (SRO) assigned to Schools, that includes their salary, retirement, FICA, workers compensation and health insurance, plus $2907 for the Sergeant, as set forth in **ATTACHMENTS "A" and "C"** to this Agreement, attached hereto and incorporated as if fully rewritten herein. The **School Board** shall remit this total annual compensation due to the **City of**

Bradenton in quarterly installments for full-time and part-time SROs in the amount **of $348,050.23.** Payments shall be due as per the following schedule:

November 12, 2026
February 24, 2027
May 19, 2027
August 3, 2027

The **City of Bradenton** also shall submit quarterly for any mutually approved in writing additional fees or other compensation for services or expenses. All invoicing, at a minimum, shall include the following details: invoice date, invoice number, name of officer, hours, rate and any additional items as specified by the school or site at the time of service. Invoices will be paid on a NET 30 basis.

F. If the **School Board** determines that it is necessary to utilize **SRO** for designated summer school programs, the **City of Bradenton** shall provide up to three **SROs** and the **SRO** costs, expenses, entitlements and benefits shall be reimbursed to the **City of Bradenton** by the **School Board.** Summer school services shall be **billed upon completion of summer school.**

G. If due to an exceptional occurrence, sporting event, public meeting or other activity, it is necessary for other officers, in addition to the assigned **SRO** to attend those activities in their official duty capacity in order to maintain peace and order, compensation for those additional duties will be charged to the **School Board** in keeping with the **City of Bradenton** applicable collective bargaining agreement (Collective Bargaining Agreement) and the **City of Bradenton's** existing rules and policies concerning the provision of off-duty officers for special events. The additional services shall be **invoiced monthly and have payment of NET 30.**

H. **SRO shall be entitled to the sick leave benefits as provided by the Collective Bargaining Agreement from the City of Bradenton.** The City of Bradenton shall provide a substitute or replacement officer for the absent **SRO** at no additional cost to the **School Board.** The **SRO** supervisor may be used to act as a substitute officer for an unavailable **SRO.** If the absence of the **SRO** is due to sickness/injury that is job related and compensable through worker's compensation, the **City of Bradenton** shall be responsible for compensating and providing a substitute officer for the period of time that the assigned **SRO** is absent and receiving worker's compensation.

I. If the assigned **SRO** is required to work overtime (in excess of the designated 8-hour day/40-hour week) by the **School Board,** the **City of Bradenton** shall be responsible for compensatory time in accordance with the Collective Bargaining Agreement. Overtime will be paid directly to the officers by the **City of Bradenton** and reimbursed to the City from the school's internal accounts or

SDMC department funds within 30 days of receipt of invoice. SRO's and/or other Officers that cover any Board Meetings will receive overtime to their rate of pay.

J. The **City of Bradenton** and the **School Board** shall cooperate and act in good faith in fulfilling the terms and conditions of this Agreement. If, due to unforeseen circumstances, issues arise or questions develop regarding the implementation and interpretation of the provisions of the Agreement, both parties shall negotiate in good faith in resolving those matters. In keeping with the public purpose of this Agreement in protecting the students, **School Board** staff, and the general public.

K. If it becomes necessary for an assigned **SRO** to be relieved of duty or be removed from his/her position at his/her assigned school by the **City of Bradenton,** the principal of the school affected, shall be contracted and briefed of the facts relating to the removal. If the removal of the **SRO** is at the request of the affected school's principal, said request shall be in writing documenting the reason for such request and forwarded through the affected **SRO's** chain of command, with a copy forwarded to the Superintendent of Schools. An appropriate meeting of the necessary staff of the **City of Bradenton** and the **School Board** shall be scheduled in order to discuss and resolve the issues involved with the affected **SRO.** The **Chief** shall make the final determination regarding placement of **City of Bradenton** personnel.

L. Term:

The term of the Agreement shall be for the 2026-2027 school year, from July 1, 2026 through June 30, 2027. The Agreement may be terminated by the School Board at any time if insufficient funding occurs as a result of the action of the State Legislature or withdrawal of funds occurs during the term of the Agreement. In either case, the School Board will be responsible for the financial obligations of this Agreement for the balance of the term or until officer vacancies occur in order to transfer SRO's into a budgeted police officer position. This agreement may be extended for an additional two one (1) year renewals upon agreement by both parties. Any changes to proposed pricing must be made 60 days in advance of the renewal.

M. Termination:

The Agreement may be terminated by either party upon thirty (30) day written notice where a breach of this Agreement has occurred, and the breaching party has failed to cure the breach within 30 days. Upon termination, the **School Board** shall be entitled to a prorated refund in accordance with the compensation formula for each day the **SRO** services are not provided as a result of termination. The **City of Bradenton** shall be entitled to compensation for all services performed up

to the date of termination.

N. Indemnification:

Consistent with Section 768.28, Florida Statutes, the **School Board** and the **City of Bradenton** agree to defend, indemnify and hold harmless the other party, their agents, employees, officers and Board Members against any and all third-party claims, loses, damages, expenses, or liabilities, including attorney's fees, resulting from or arising out of the intentional or negligent acts or omissions of its own employees, officers or agents, whether occurring before or after the **School Board** and the **City of Bradenton** assumed the obligations of this Agreement. No provision of the Agreement shall constitute, or be interpreted as, a waiver of sovereign immunity, and all defenses relative to sovereign immunity shall be preserved.

0. Notice:

Where any notice is required under this Agreement or applicable law, such notice shall be provided by certified mail, return receipt requested, as follows:

For the City of Bradenton	**For the School Board**
Josh Cramer, Chief of Police City of Bradenton Police Department 100 10th Street West Bradenton, Florida 34205	Laurie Breslin, Superintendent School District of Manatee County 215 Manatee Avenue West Bradenton, Florida 34205

P. Entire Agreement:

This Agreement, together with the attachments set forth below represents the entire understanding of the parties and supersedes all prior agreements, whether written or oral, with respect to such subject matter. All attachments are incorporated in their entirety into and form part of the Agreement. The Agreement has the following attachments:

Attachment A - School Coverage

Attachment B- School Resource Officer Sign-In Log

Attachment C - School Resource Officer Budget

Q. Severability:

No waiver of any provision of this Agreement shall be deemed, or shall constitute, a waiver of any other provision, whether or not similar, nor shall any waiver constitute a continuing waiver. No waiver shall be binding unless executed in writing by the party making the waiver.

R. Venue:

This Agreement shall be governed by and shall be construed in accordance with the laws of the state of Florida. Venue for any litigation hereunder shall be in Manatee County, Florida.

S. Equal Opportunity:
The **School Board** and the **City of Bradenton** do not discriminate on the basis of race, sex, marital status, national origin, religion, disability, or age, in the operation of the school district or in the provisions of services.

T. The Florida Sunshine Law is a series of laws designed to guarantee that the public has access to the public records of governmental bodies in Florida, Section 286.011 et seq., and Section 119.01 et seq., Florida Statutes. The contracting party with the **School Board** hereby acknowledges and agrees to comply with the Florida Sunshine Law, including but, not limited to keeping and maintaining all records that relate and/or pertain to the terms of this Agreement for inspection and copying, public records requests, internal audits and for any other informational purpose.

U. In the event the **City of Bradenton** is no longer subject to a Collective Bargaining Agreement or the **SRO** is not a member of a bargaining unit, the **City of Bradenton** Personnel Policy shall govern personnel issues as appropriate.

This section intentionally left blank

IN WITNESS WHEREOF, the parties have caused the execution of this Agreement, in duplicate, on the date last signed below.

SCHOOL BOARD OF MANATEE COUNTY, FLORIDA

By: _____ Date:
Cindy Spray, Board Chair

ATTEST:

By: _____ Date:
Superintendent Laurie Breslin

By: _____ Date:
Gene Brown, Mayor

ATTEST:

By:_____ Date:
Tamara Melton, City Clerk

By:_____ Date:
Josh Cramer, Chief of Police

2026-2027 SRO Contract

Attachment A

School Coverage

School	Assigned SRO
Manatee High School	Officer Shawn Gow
Manatee High School	Officer Justin Gause
Manatee Elementary School (Part Time)	Officer Shane Shehorn
Manatee Elementary School (Part Time)	Officer Michael Stonebridge
Sugg Middle School	Officer Terrell Brown
Admin Sergeant	Sergeant Ryan Vaughn

This section intentionally left blank

Attachment B

SCHOOL RESOURCE OFFICER
TIMESHEET- MONTHLY REPORTING

School District of Manatee County
215 Manatee Ave W Bradenton, Fl. 34205
(941) 708-8770 www.manateeschools.net

Month_____ Year_____ School Location_____

_____ _____
Officer (Last Name First) ID #

DATE	DAY	TIME IN	TIME OUT	TIME IN	TIME OUT	TIME IN	TIME OUT	DAILY TOTAL	REASON FOR ABSENCE

DATE	DAY	TIME IN	TIME OUT	TIME IN	TIME OUT	TIME IN	TIME OUT	DAILY TOTAL	REASON FOR ABSENCE

DATE	DAY	TIME IN	TIME OUT	TIME IN	TIME OUT	TIME IN	TIME OUT	DAILY TOTAL	REASON FOR ABSENCE

DATE	DAY	TIME IN	TIME OUT	TIME IN	TIME OUT	TIME IN	TIME OUT	DAILY TOTAL	REASON FOR ABSENCE

1

DATE	DAY	TIME IN	TIME OUT	TIME IN	TIME OUT	TIME IN	TIME OUT	DAILY TOTAL	REASON FOR ABSENCE

I hereby certify this report records hours worked by me during the period covered.

Officer signature Date

(District requires a physical signature)

I hereby certify this report correctly records the hours worked by this officer.

Principal Signature Date

(District requires a physical signature)

This section intentionally left blank

ATTACHMENT C- PROPOSED 2026-2027 - 3 FULL-TIME OFFICERS & 2 PART-TIME OFFICERS									
Personal Expenses	2026-2027								
Regular Salary	328,964.54								
FICA	25,165.79								
Retirement	78,604.69								
Benefits	61,572.60								
Total Personnel Expenses	494,307.61								
Administrative Fee									
$2,907	2,907.00								
	ATTACHMENT "C"								
Total Operating Expenses	2,907.00								
TOTAL COST	**$ 497,214.61**								
School Board 70% share	**$ 348,050.23**				**Four payments**		**$ 87,012.56**		
	Rate of Pay per Contract	Annual Salary	Patrol Support	Total Salary	30.20% Retirement	0.0765 FICA	0.043 W/C	Hospital	Total
Employee									
Gow, Shawn (6689)	43.0617	89,568.34	3,000.00	92,568.34	27,955.64	7,081.48	3,980.44	15,809.04	147,394.93
Brown, Terrell (8383)	34.6845	72,143.76	3,000.00	75,143.76	22,693.42	5,748.50	3,231.18	15,809.04	122,625.89
Gause, Justin (6248)	43.0617	89,568.34	3,000.00	92,568.34	27,955.64	7,081.48	3,980.44	15,809.04	147,394.93
						-	-		-
						-	-		-
Part Time Officer (less than 130 hours/month)	34.6918	30,442.05	3,900.00	34,342.05		2,627.17	1,476.71	-	38,445.93
Part Time Officer (less than 130 hours/month)	34.6918	30,442.05	3,900.00	34,342.05		2,627.17	1,476.71	-	38,445.93
(4472/8015)		312,164.54	16,800.00	328,964.54	78,604.69	25,165.79	14,145.48	47,427.12	494,307.61
Professional Services									
SRO Sergeant/ Supervisor (3% of Salary)	Administrative Fee	2,907.00		-					
			-	-	-	-	-	-	-
*pay rates will change every Oct 1 and are not currently set									
part time sro-45 hours a week combined between the 2 positions for 39 weeks									
**Possible increase in health insurance									

This section intentionally left blank

Employment Eligibility Verification ("E-VERIFY")

By entering into a contract with the School District of Manatee County (a public employer in Florida) to provide goods or services in exchange for salary, wages or other renumeration, this section applies to verify employment eligibility. Therefore, pursuant to Section 448.095, Florida Statutes and beginning January 1, 2021, every public employer, Contractor and Subcontractor shall register with and use the United States Department of Homeland Security's E-Verify system, located at https://e-verify.uscis.gov/emp to verify the work authorization status of all newly hired employees. The Parties may not enter into a contract unless each party registers with and uses the federal E-Verify system.

The Contractor verifies its compliance with the E-Verify System by listing its E-Verify System Number on this document; by signature and submission of this contract, asserts it does not hire any employees, and it is not an unauthorized alien, as defined by this statute.

The Contractor will require all Subcontractors who work on this contract to use the E-Verify System for any subcontracted employees hired during this contract. The Contractor will verify Subcontractor's compliance with an affidavit stating whether the Subcontractor uses the E-Verify System as evidenced by Subcontractor's E-Verify System Number or that the Subcontractor is not an unauthorized alien and does not employ, contract with or subcontract with unauthorized aliens defined by this statute. The Contractor will maintain and provide the Subcontractor's affidavits to the School District on request during this contract.

Termination: With good faith belief that the Contractor knowingly violated this section, the School District will terminate the contract. Further, with good faith believe that the Subcontractor knowingly violated this section, the School District will promptly notify the Contractor and the Contractor will immediately terminate the Contractor's contract with the Subcontractor. A contract terminated for noncompliance with E-Verify is not a breach of contract and may not be considered as such.

To the extent required by applicable law, the Contractor is liable for any additional costs incurred by the School District resulting from a failure to comply with E-Verify. Additional costs may include but are not limited to higher costs for the same services and rebidding costs (if necessary). Likewise, the Contractor will be barred from any other contracts with the School Board for at least one year after the date the contract was terminated.

CONTRACTOR E-VERIFY NUMBER: _____

_____

Company Name

_____

Signature of Contractor's Authorized Official

_____

Name and Title of Contractor's Authorized Official

_____

Date

Contractor Affidavit Regarding the Use of Coercion for Labor and Services

Contractor Name: _____

Address: _____

Phone Number: _____

Authorized Representative's Name: _____

Authorized Representative's Title: _____

Email Address: _____

Section 787.06(13), Florida Statutes requires all nongovernmental entities (such as Vendor) executing, renewing, or extending a contract with a governmental entity (such as the School Board of Manatee County, Florida) to provide an affidavit signed by an officer or representative of Vendor under penalty of perjury that Vendor does not use coercion for labor or services as defined in that statute.

As the person authorized to sign on behalf of Vendor, I certify that the company identified above does not:

- Use or threaten to use physical force against any person;
- Restrain, isolate, or confine or threaten to restrain, isolate, or confine any person without lawful authority and against her or his will;
- Use lending or other credit methods to establish a debt by any person when labor or services are pledged as a security for the debt, if the value of the labor or services as reasonably assessed is not applied toward the liquidation of the debt, the length and nature of the labor or services are not respectively limited and defined;
- Destroy, conceal, remove, confiscate, withhold, or possess any actual or purported passport, visa, or other immigration document, or any other actual or purported government identification document, of any person;
- Cause or threaten to cause financial harm to any person;
- Entice or lure any person by fraud or deceit; or
- Provide a controlled substance as outlined in Schedule I or Schedule II of s. 893.03 to any person for the purpose of exploitation of that person.

Under penalties of perjury, I declare that I have read the foregoing document and that the facts stated in it are true.

_____ _____

Signature of Authorized Representative Date

AGENDA ITEM NO. 6.i

Item Cover Page

CITY COUNCIL MEETING AGENDA ITEM REPORT

DATE: May 27, 2026

SUBMITTED BY: Heather Lutz-Silver, Public Works & Utilities

ITEM TYPE: Agreement

AGENDA SECTION: CONSENT AGENDA

SUBJECT: Amendment to the Traffic Signal Maintenance and Compensation Agreement with the Florida Department of Transportation (FDOT)

SUGGESTED ACTION: Approval

Is this item Quasi-Judicial?
No

Does this item require a public hearing?
No

EXPLANATION:
This agreement renews the maintenance and compensation contract between the City of Bradenton and the Florida Department of Transportation (FDOT). Under Contract No. ARW43, the City will maintain 67 state-owned traffic signals as part of Financial Project No. 413639-1-88-01, with a total compensation of $305,659.00. The agreement will be in effect from July 1, 2026, through June 30, 2027, ensuring continued upkeep of essential traffic signal infrastructure.

FINANCIAL IMPACT:
Funding will be allocated from the operating budget of the Electrical Maintenance Division under the General Fund (001), Division (51940), Traffic Signal Repair & Maintenance (546500). This funding supports the continued maintenance of state-owned traffic signals and infrastructure upkeep.

ATTORNEY REVIEW/RECOMMENDATION:
Reviewed and approved by City Attorney, Scott Rudacille.

SUGGESTED MOTION:
Motion to approve the Amendment to the Traffic Signal Maintenance and

Compensation Agreement with FDOT.

ATTACHMENTS:
Amendment to the Traffic Signal Maintenance and Compensation Agreement

AMENDMENT TO THE TRAFFIC SIGNAL MAINTENANCE AND COMPENSATION AGREEMENT

CONTRACT NO. ARW43
FINANCIAL PROJECT NO. 413639-1-88-01
F.E.I.D. NO. F596000283001
AMENDMENT NO.

THIS AMENDMENT TO THE TRAFFIC SIGNAL AND MAINTENANCE AGREEMENT ("Amendment") is made and entered into on this day of , 2026, by and between the STATE OF FLORIDA, DEPARTMENT OF TRANSPORTATION ("Department"), an agency of the State of Florida, and the City of Bradenton, ("Maintaining Agency").

RECITALS

WHEREAS, the Department and the Maintaining Agency on June 8, 2015 entered into a Traffic Signal Maintenance and Compensation Agreement ("Agreement").

WHEREAS, the Parties have agreed to modify the Agreement on the terms and conditions set forth herein.

NOW THEREFORE, in consideration of the mutual covenants in this Amendment, the Agreement is amended as follows:

1. Exhibit A is amended, superseded and replaced in its entirety with the new Exhibit A that is attached to this Amendment.

IN WITNESS WHEREOF, the undersigned parties have executed this Amendment on the day, month and year set forth above.

CITY OF BRADENTON, Florida
(Maintaining Agency)

By: _____
(Authorized Signature)

Print/Type Name: Gene Brown

Title: Mayor

STATE OF FLORIDA
DEPARTMENT OF TRANSPORTATION

By: _____
(Authorized Signature)

Print/Type Name: Steven Davis, P.E.

Title: District Traffic Operations Engineer

Legal Review: _____

TRAFFIC SIGNAL MAINTENANCE AND COMPENSATION AGREEMENT

EXHIBIT A

Compensation for Maintaining Traffic Signals and all other Devices for FY 2027 **Maintaining Agency:** **City of Bradenton**

Effective Date: 7/1/2026 **To: 6/30/2027** FPID: 413639-1-88-01 Contract: ARW43

Intersection Locations		ID #	TS	IMTS	ICB	PFB	FDS	SAWD	ISNS	BOS	TWB	PDDS	UPS	CAVD	PHB	ADMS	PPD	TrMC	IRWL	Total
SR 45/US 41B	21ST AVE W	404		$ 6,063					$ 429				$ 135					$ 752		$ 7,379
SR 45/US 41B	17TH AVE W	405		$ 6,063					$ 429				$ 135					$ 752		$ 7,379
SR 45/US 41B	12TH AVE W	406		$ 6,063					$ 429				$ 135					$ 752		$ 7,379
SR 45/US 41B	9TH AVE W	407		$ 6,063					$ 429				$ 135					$ 752		$ 7,379
SR 45/US 41B	8TH AVE W	408		$ 6,063					$ 429				$ 135					$ 752		$ 7,379
SR 45/US 41B	9TH ST W	412		$ 6,063					$ 429				$ 135					$ 752		$ 7,379
SR 45/US 41B	SR 64 EB / 6TH AVE W	413		$ 6,063					$ 429				$ 135					$ 752		$ 7,379
SR 45/US 41B	SR 64 / MANATEE AVE	414		$ 6,063					$ 429			$ 135	$ 135					$ 752		$ 7,514
SR 45/US 41B	3RD AVE W	415		$ 6,063					$ 429				$ 135					$ 752		$ 7,379
SR 64/	10TH ST W	454		$ 6,063					$ 429				$ 135							$ 6,627
SR 64/	SR 55/US 41/US 301/1ST ST	455		$ 6,063					$ 429				$ 135							$ 6,627
SR 64/	9TH ST E	456		$ 6,063					$ 429				$ 135							$ 6,627
SR 64/	17TH ST E	457		$ 6,063					$ 429				$ 135							$ 6,627
SR 64/	27TH ST E	458		$ 6,063					$ 429			$ 135	$ 135					$ 752		$ 7,514
SR 64/	CARLTON ARMS BLVD	459		$ 6,063					$ 429				$ 135					$ 752		$ 7,379
SR 64/	43RD ST E/OAK LEAF BLVD	460		$ 6,063					$ 429				$ 135					$ 752		$ 7,379
SR 64/	48TH ST CT E	461		$ 6,063					$ 429				$ 135					$ 752		$ 7,379
SR 64/	15TH ST E	472		$ 6,063					$ 429				$ 135					$ 752		$ 7,379
SR 64/	9TH ST E	473		$ 6,063					$ 429				$ 135					$ 752		$ 7,379
SR 64/	SR 55/US 41/US 301/1ST ST	474		$ 6,063					$ 429			$ 135	$ 135					$ 752		$ 7,514
SR 64/	10TH ST W	475		$ 6,063						$ 458			$ 135							$ 6,656
SR 70/	7TH AVE E	487		$ 6,063					$ 429				$ 135							$ 6,627
SR 55/US 41	13TH AVE E	499		$ 6,063					$ 429			$ 135	$ 135					$ 752		$ 7,514
SR 55/US 41	9TH AVE / MLK JR AVE	500		$ 6,063					$ 429			$ 135	$ 135					$ 752		$ 7,514
SR 64/	75TH ST W	505		$ 6,063					$ 429	$ 458		$ 135	$ 135					$ 752		$ 7,972
SR 64/	VILLAGE GREEN PKWY	506		$ 6,063					$ 429				$ 135					$ 752		$ 7,379
SR 64/	67TH ST W	507		$ 6,063					$ 429				$ 135							$ 6,627
SR 64/	59TH ST W	508		$ 6,063					$ 429			$ 135	$ 135					$ 752		$ 7,514
SR 64/	51ST ST W	509		$ 6,063					$ 429				$ 135					$ 752		$ 7,379
SR 64/	43RD ST W	510		$ 6,063					$ 429			$ 135	$ 135					$ 752		$ 7,514
SR 64/	39TH ST W	511		$ 6,063					$ 429				$ 135							$ 6,627
SR 64/	26TH ST W	512		$ 6,063								$ 135	$ 135					$ 752		$ 7,085
SR 64/	15TH STREET WEST	513		$ 6,063									$ 135					$ 752		$ 6,950
SR 64 EB	14TH ST W	514		$ 6,063									$ 135					$ 752		$ 6,950
SR 64/	13TH ST W	515		$ 6,063									$ 135							$ 6,198
SR 64/	12TH ST W	516		$ 6,063									$ 135					$ 752		$ 6,950
SR 64/	12TH ST W	517		$ 6,063									$ 135					$ 752		$ 6,950
SR 64/	13TH ST W	518		$ 6,063									$ 135							$ 6,198
SR 64 WB	14TH ST W	519		$ 6,063									$ 135					$ 752		$ 6,950
SR 64 EB	11th St W	1519		$ 6,063					$ 429				$ 135							$ 6,627
SR 64 WB	Court St.	1520		$ 6,063					$ 429	$ 458			$ 135							$ 7,085
US 41B NB	13TH ST W (RRFB)	F184				$828														$ 828
US 41B SB	13TH ST W (RRFB)	F186				$1,656														$ 1,656
US 41B NB	11TH ST W (RRFB)	F187				$828														$ 828
US 41B SB	11TH ST W (RRFB)	F189				$1,656														$ 1,656
US 41B NB	12TH ST W (RRFB)	F191				$828														$ 828
SR 64 (Manatee Ave)	W OF 17th ST E	F209				$828														$ 828
SR 64 WB (Manatee Ave)	E OF 17TH ST E (Median)	F210						$ 417												$ 417
SR 64 WB (Manatee Ave)	E OF 17TH ST E (Shoulder)	F211						$ 417												$ 417
SR 64 EB (Manatee Ave)	W OF 15TH ST E (Median)	F266						$ 417												$ 417
SR 64 EB (Manatee Ave)	W OF 15TH ST E (Shoulder)	F267						$ 417												$ 417
SR 64 (Manatee Ave)	W OF 43RD ST W	F306																		$ -
SR 64	Manatee Bridge (BlueToad)	SPID 321										$ 135	$ 135					$ 752		$ 1,022

EXHIBIT A

Compensation for Maintaining Traffic Signals and all other Devices for FY 2027 **Maintaining Agency:** **City of Bradenton**

Effective Date: 7/1/2026 **To: 6/30/2027** FPID: 413639-1-88-01 Contract: ARW43

Intersection Locations		ID #	TS	IMTS	ICB	PFB	FDS	SAWD	ISNS	BOS	TWB	PDDS	UPS	CAVD	PHB	ADMS	PPD	TrMC	IRWL	Total
SR 64	West end of Perico Island (MVDS 2	VDS-Man.Br.										$ 135								$ 135
US 41/1st St	S of 11th Ave W (MVDS 51)	VDS-4111										$ 135								$ 135
US 41B/9th St W	N of 8th Ave W (MVDS 50)	VDS-4101										$ 135								$ 135
SR 64 EB/6th Ave W	W of 8th St W (MVDS 2)	VDS-4018										$ 135								$ 135
SR 64 EB/6th Ave W	E of 14th St W (MVDS 1)	VDS-4121										$ 135								$ 135
SR 64 EB/6th Ave E	E of 9th St E (MVDS 33)	VDS-4016										$ 135								$ 135
SR 64 WB/Manatee Ave E	E of 1st St (MVDS 6)	VDS-4113-1										$ 135								$ 135
US 41/1st St	S of SR 64 (MVDS 5)	VDS-4113-2										$ 135								$ 135
US 41B/9th St W	S of 3rd Ave W (MVDS 4)	VDS-4118										$ 135								$ 135
SR 64 WB/Manatee Ave W	E of 8th St W (MVDS 3)	VDS-4019										$ 135								$ 135
SR 64	W of 17th St E (MVDS 7)	VDS-4013										$ 135								$ 135
SR 64	E of 26th St W (MVDS 30)	VDS-4025										$ 135								$ 135
SR 64	W of Village Green (MVDS 29)	VDS-4031										$ 135				$ 2,212				$ 2,347
US 41B/14th St W	S of 17th Ave W (MVDS 47)	VDS-4081										$ 135								$ 135
																				$ -
																		Total Lump Sum *		$ 305,659

* Amount paid shall be the Total Lump Sum ***minus any retainage or forfeiture*** .

I certify that the above traffic signals will be maintained and operated in accordance with the requirements of the Traffic Signal Maintenance and Compensation Agreement. For satisfactory completion of all services detailed in this Agreement for this time period, the Department will pay the Maintaining Agency a Total Lump Sum (minus any retainage or forteiture) of $ 305,659

Maintaining Agency Gene Brown, Mayor Date

District Traffic Operations Engineer Date

Legend:

TS - Traffic Signal
IMTS - Traffic Signal Interconnected & Monitored
ICB - Intersection Control Beacon
PFB - Pedestrian Flashing Beacon
FDS - Emergency Fire Department Signal
SAWD - Speed Activated Warning Display
ISNS - Illuminated Street Name Sign
BOS - Blank Out Sign
TWB - Traffic Warning Beacon
PDDS - Probe Data Detection System (formerly Travel Time Detector (TTD))
UPS - Uninterruptible Power Supply
CAVD - Connected Automated Vehicle Device
PHB - Pedestrian Hybrid Beacon
ADMS - Arterial Dynamic Message Sign
PPD - Passive Pedestrian Detection
TrMC - Traffic Monitoring Camera
IRWL - In-Roadway Warning Lights
Total - Compensation Amount (using Unit Rates from Exhibit B)

AGENDA ITEM NO. 6.j

Item Cover Page

CITY COUNCIL MEETING AGENDA ITEM REPORT

DATE: May 27, 2026

SUBMITTED BY: Kristofer Eccles, Public Works & Utilities

ITEM TYPE: Contract

AGENDA SECTION: CONSENT AGENDA

SUBJECT: Change Order 2 for Eastside Drainage Improvements

SUGGESTED ACTION: Approval

Is this item Quasi-Judicial?
No

Does this item require a public hearing?
No

EXPLANATION:
Change Order #2 for the Eastside Drainage Improvements project includes several items required for the successful completion of the project. Item COR-4502-002 removes and replaces an additional 150 square yards of deteriorated sidewalk along 8th Avenue East to provide a complete and safe path for pedestrians. Item COR-4502-003 provides for the removal of additional unsuitable soils encountered during construction, allowing for adequate compaction to protect the new piping. Due to unforeseen conditions encountered during excavation, the project required a modification of the receiving manhole downstream of the pond and the installation of several conflict boxes. The former, item COR-4502-007, allows for uninterrupted drainage to the Manatee River during peak hour flows. The conflict boxes, items COR-4502-005, COR-4502-006, COR-4502-008 and COR-4502-009, serve as protection for the existing water mains, sewers, and force mains in the path of the new drainage pipe. The proposed contract modification will ensure the project installs a complete and operable stormwater system.

FINANCIAL IMPACT:
Funded by GL account 43053810-563000-22808.

ATTORNEY REVIEW/RECOMMENDATION:
N/A

SUGGESTED MOTION:
Motion to approve Change Order 2 for Eastside Drainage Improvements.

ATTACHMENTS:
Change Order 2

CHANGE ORDER (CO) NO. 2_____

OWNER/CLIENT: City of Bradenton_____PROJECT NO.: 30358200-563000-22808_____PROJECT MANAGER: Brian Norman_____

ENGINEER: WSP USA Environment & Infrastructure, Inc._PROJECT NO.: 600621_____PROJECT MANAGER: Greg Corning_____

CONTRACTOR: Ferreira Construction_____PROJECT NO.: 4502_____PROJECT MANAGER: Hody Hanson_____

PROJECT NAME: Eastside Drainage Improvements_____

DATE OF ISSUANCE: May 27, 2026_____ EFFECTIVE DATE: _____

The Contract Documents are modified as follows upon execution of this Change Order.

CHANGE IN CONTRACT PRICE:	CHANGE IN CONTRACT TIMES:
Original Contract Price: $2,376,153.10	Original Contract Times: ☐ Working days ☒ Calendar days Substantial completion (days or date): 240 Ready for final payment (days or date): 270
[Increase/Decrease] from previously approved Change Orders No.1_____to No.1_____: $163,124.82	[Increase/Decrease] from previously approved Change Orders No.1_____to No.1_____: Substantial completion (days): 60 Ready for final payment (days): 60
Contract Price prior to this Change Order: $2,539,277.92	Contract Times prior to this Change Order: Substantial completion (days or date): 300 Ready for final payment (days or date): 330
[Increase/Decrease] of this Change Order: $769,355.21	[Increase/Decrease] of this Change Order: Substantial completion (days or date): 80 Ready for final payment (days or date): 80
Contract Price incorporating this Change Order: $3,308,633.13	Contract Times with all approved Change Orders: Substantial completion (days or date): 380 Ready for final payment (days or date): 410

DESCRIPTION OF CHANGE
(Attach additional sheets if required.)

		DEDUCT	ADD
COR-4502-002	FDOT Sidewalk Remove & Replace		$16,005.00
COR-4502-003	Additional Unsuitable Soil Haul-Off		$67,536.00
COR-4502-005	11th Ave E Conflict Box @ Sta. 34+10		$124,817.00
COR-4502-006	11th Ave E Conflict Box @ Sta. 31+63		$97,381.90
COR-4502-007	Retention Pond Clearing and Fencing		$44,835.21
COR-4502-008	Effluent Manhole Retrofit & Connection		$80,153.99
COR-4502-009	Manatee County Water Mains Conflict Box		$125,585.13
COR-4502-009	City of Bradenton LS18 Force Main Conflict Box		$77,040.65
COR-4502-010	Conflict Matrix Adjustments		$136,000.33
TOTAL			$769,355.21

SECTION 00941

ATTACHMENTS
(List documents supporting change.)

COR-4502-002: RFI #9 dated 7/15/25, Markups to plan sheets C-101 and C-222, photos dated 4/8/25
COR-4502-003: 134 truck tickets of unsuitable soils provided by contractor (stored with project file)
COR-4502-005: RFI #16 dated 10/29/25, Markups to plan sheet C-240
COR-4502-006: RFI #14 dated 10/29/25, Markups to plan sheet C-239
COR-4502-007: RFI #17 dated 12/19/25, Markups to plan sheet C-000
COR-4502-008: RFI #6 dated 5/28/25, Markups to plan sheet C-220, time & materials quote dated 3/10/26
COR-4502-009: RFI #5 dated 10/29/25, Markups to plan sheet C-236, FDOT index 425-080, time & materials quotes dated 3/10/26
COR-4502-010: RFI #21 dated 4/5/26, Markups to plan sheets C-229 and C-231, time & materials quote dated 5/18/26

This Change Order is an amendment to the Contract Agreement between Contractor and the Owner, and all contract provisions shall apply unless specifically exempted. The amount and time change designated are the maximum agreed to by the Owner and the Contractor for this change. In consideration of the foregoing adjustments in contract time and contract amount, the Contractor hereby releases the Owner from all claims, demands, or causes of action arising from the transactions, events, and occurrences related to this Change Order. This written Change Order is the entire agreement between Owner and Contractor with respect to this Change Order. No other agreements or modifications shall apply to this Contract amendment unless expressly provided herein. This Change Order represents final action relating to this Change Order.

RECOMMENDED:
By: Brian Norman Digitally signed by Brian Norman Date: 2026.05.19 15:37:58 -04'00'
Engineer (Authorized Signature)
Date: _____

ACCEPTED:
By: _____
Owner (Authorized Signature)
Date: _____

ACCEPTED:
By: Michael Monday
Contractor (Authorized Signature)
Date: 5-18-2026

FERREIRA

REQUEST FOR INFORMATION (RFI)	RFI # 9	Page #

Contract No.	Job #	Contract Name:
30358200-563000-22808	4502	City of Bradenton - Eastside Drainage Improvements

Contractor's Request for Information

Requested by:	Date Requested:	Attn:
Kyle B. Renz	07/15/2025	Brian Norman - City of Bradenton

SUBJECT	8th Ave E Additional Sidewalk Remove & Replace for Dewatering
SPEC SECTION	02240 Dewatering & 02523 Sidewalks, Driveways & Curbs
DRAWINGS	C-101; C-222 & C-223

Information Requested:

On Drawings C-101, the proposed 18" RCP alignment is approximately 9.5 ft from the edge of curb, along 8th Ave E. With the additional 4 ft wide sidewalk, The wellpoint system installed along the proposed 18" RCP alignment is too far away from the trench to effectively mitigate water from entering the trench. Before Ferreira started construction activities, the existing sidewalk along the north edge of 8th Ave E was damaged and cracking.

Contractor Recommendation:

In order to effectively mitigate the water from entering the trench Ferreira suggests that additional remove & replace of the sidewalk along 8th Ave E. This scope of work is approximately an additional 75 SY of Sidewalk replacement. Ferreira can perform this work for $106.70 /SY which is the contractual unit price; $8,002.50.

The removal of this sidewalk will allow Ferreira to install the wellpoints closer to the trench a minimize the amount of times that a kelly well needs to be reset in the trench.

Owner / Engineer Response:

Via text message from Roy Lessig on 7/22/25, the additional removal & replacement of the sidewalk along 8th Ave E has been approved. An additional 75 SY was added per field change discussed between Eugene Deriso (Ferreira Foreman) & Roy Lessig (City of Bradenton Inspector). 150 SY @ $106.70 = $16,005.00

Ferreira Construction will follow-up this RFI with a formal change order cost proposal & Proposed Contract Modification (PCM).

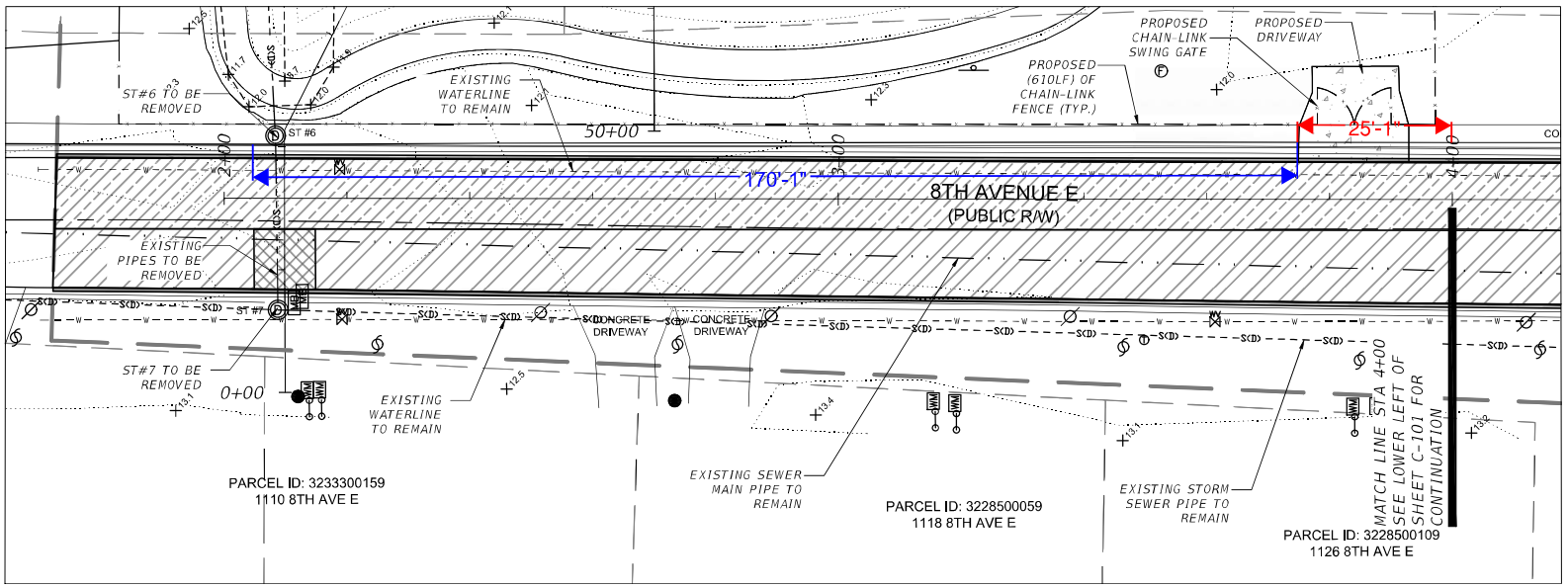

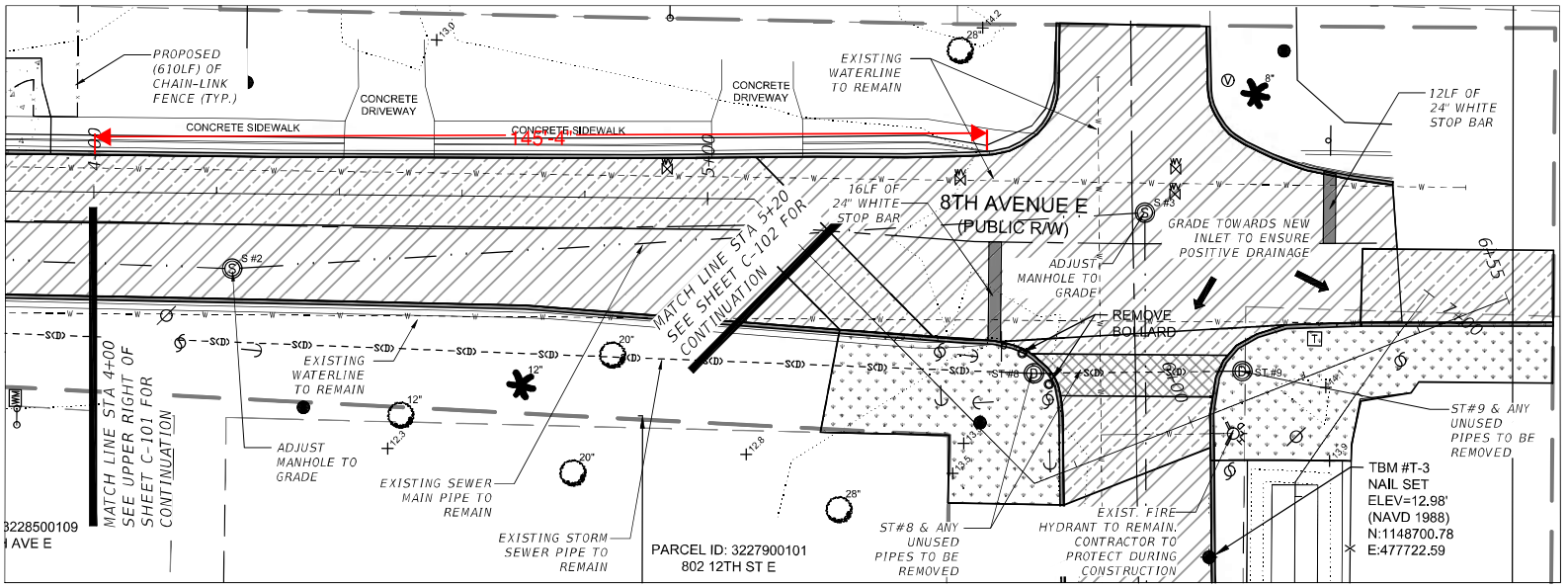

LEGEND

- ASPHALT MILLING & PAVING W/ 6" YELLOW CENTER SKIP & 6" WHITE SOLID EDGE (57,351 SQ. FT)
- ASPHALT REMOVAL AND REPLACEMENT (9,519 SQ. FT)
- SIDEWALK RESTORATION (6,733 SQ. FT)
- PROPOSED DRIVEWAY (253 SQ. FT)
- DRIVEWAY RESTORATION (735 SQ. FT)
- GRASS RESTORATION (14,359 SQ. FT)
- PAVEMENT & PIPES REMOVAL (920 SQ. FT)
- CURB REPLACEMENT (5,950 LF FT)

0 10' 20'
HORIZONTAL
SCALE: 1"=20'-0"

LIST OF STRUCTURES:

S#2
RIM = 12.36'
E 8" METAL INV = 7.44'
W 8" PVC INV = 7.26'

S#3
RIM = 13.36'
E 8" METAL INV = 6.78'
S 12" PVC INV = 6.61'

SEAL

Digitally signed by Gregory W. Corning
Date: 2024.12.03 19:02:55 -05'00'

GREG W. CORNING
FL. REG. NO. 79293

REV.	DESCRIPTION	DESIGNED	PREPARED	REVIEWED	APPROVED
100%	100% SUBMITTAL	T.D.	J.A.M.	T.D.	G.W.C.
REV.	2024-07-26				

CLIENT
CITY OF BRADENTON
1411-9th STREET WEST
BRADENTON, FL 34205

CONSULTANT
USA ENVIRONMENT & INFRASTRUCTURE, INC.
5845 N.W. 158th STREET
MIAMI LAKES, FL 33014
PHONE: (305) 826-5588

PROJECT
CITY OF BRADENTON
EASTSIDE DRAINAGE IMPROVEMENTS

TITLE
PAVING, STRIPING & DEMOLITION PLAN

PROJECT NO.
600621

REV. 2 of 11

C-101

IF THIS MEASUREMENT DOES NOT MATCH WHAT IS SHOWN, THE SHEET SIZE HAS BEEN MODIFIED FROM ANSI D

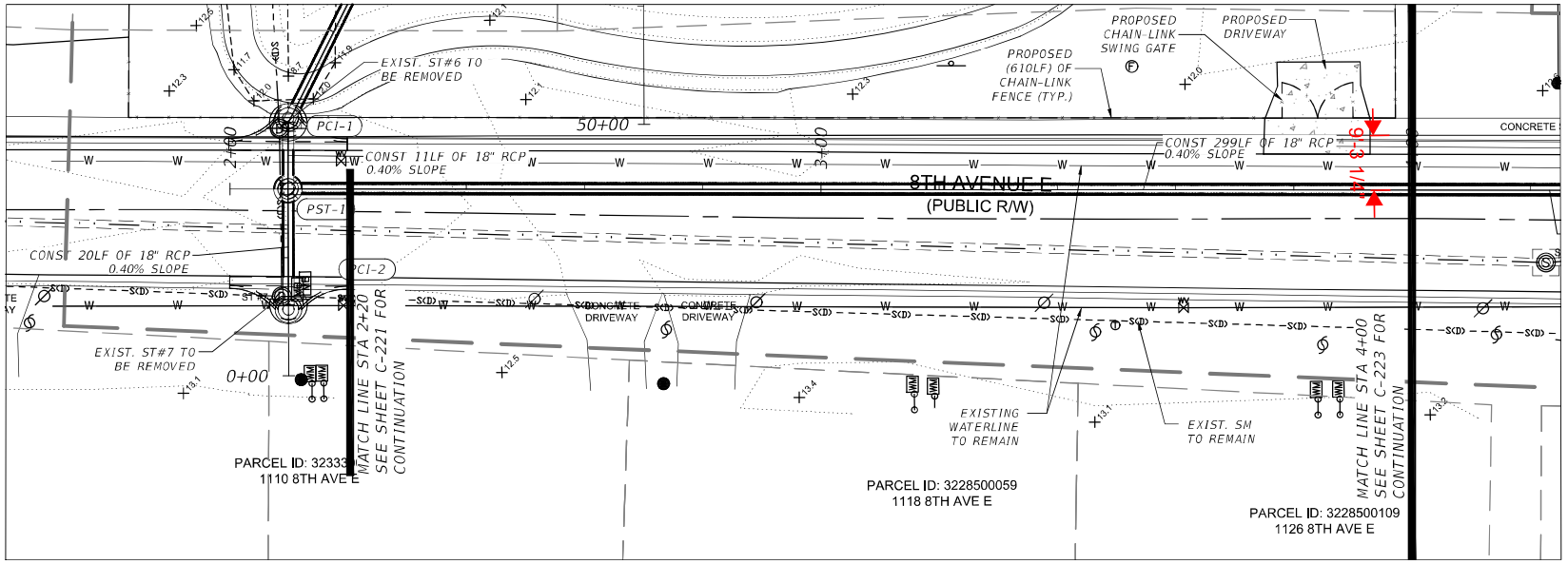

LIST OF STRUCTURES:

PCI-1
CURB INLET
RIM = 12.37'
NE 18" RCP INV = 2.33'
S 18" RCP INV = 2.33'

PCI-2
CURB INLET
RIM = 12.23'
N 18" RCP INV = 2.45'

PST-1
PRECAST MANHOLE
RIM = 12.17'
N 18" RCP INV = 2.37'
S 18" RCP INV = 2.37'
E 18" RCP INV = 2.37'

ST#6
REMOVED & REPLACED W/ PCI-1

ST#7
REMOVED & REPLACED W/ PCI-2

8th Avenue Alignment
2+00.00-6+55.36

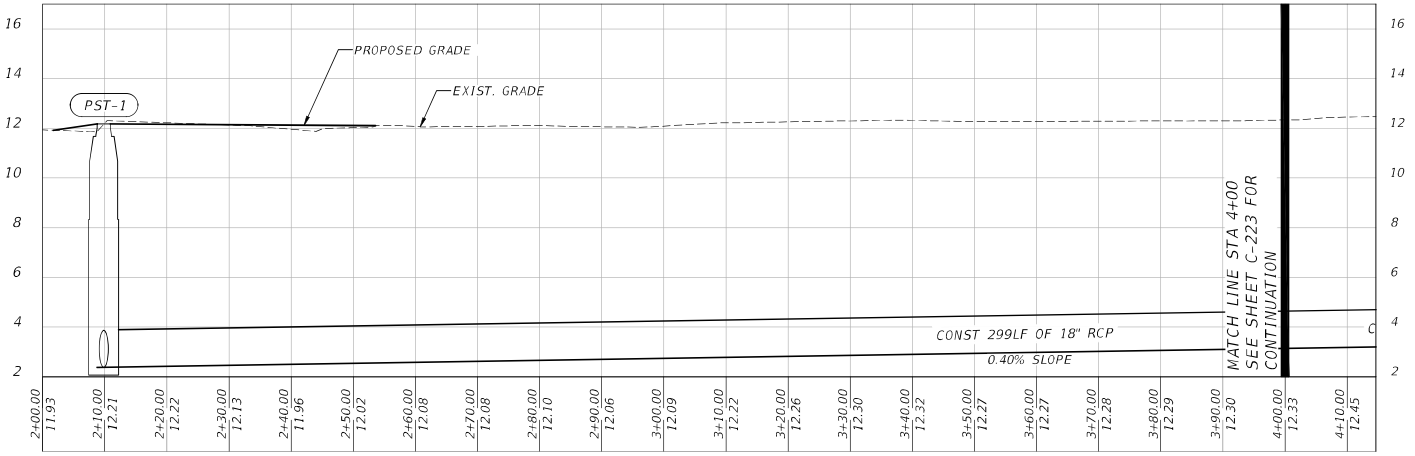

SEAL

Digitally signed by Gregory W. Corning
Date: 2024.12.03 20:41:42 -05'00'

GREG W. CORNING
FL. REG. NO. 79293

REV.	YYYY-MM-DD	DESCRIPTION	DESIGNED	PREPARED	REVIEWED	APPROVED
100%	2024-07-26	100% SUBMITTAL	T.D.	J.A.M.	T.D.	G.W.C.

CLIENT
CITY OF BRADENTON
1411-9th STREET WEST
BRADENTON, FL 34205

CONSULTANT
USA ENVIRONMENT & INFRASTRUCTURE, INC.
5845 N.W. 158th STREET
MIAMI LAKES, FL 33014
PHONE: (305) 826-3588

PROJECT
CITY OF BRADENTON
EASTSIDE DRAINAGE IMPROVEMENTS

TITLE
PLAN & PROFILE

PROJECT NO.
600621

REV.

3 of 21

C-222

Path: ##

Apr 8, 2025 at 11:43:52 AM
726 12th St E
Bradenton FL 34208
United States

726 12th St E
Bradenton FL 34208
United States

FERREIRA

REQUEST FOR INFORMATION (RFI)	RFI # 16	Page #

Contract No.	Job #	Contract Name:
30358200-563000-22808	4502	City of Bradenton - Eastside Drainage Improvements

Contractor's Request for Information

Requested by:	Date Requested:	Attn:
Kyle B. Renz	10/29/2025	Brian Norman - City of Bradenton

SUBJECT	Exisitng 12" x 18" ERCP Tie-In to 18" RCP @ Sta. 34+10 on 11th Ave E
SPEC SECTION	02630 - Storm Drainage
DRAWINGS	C-240

Information Requested:

On C-240, at approximately Sta. 34+10 there is an existing 12" x 18" ERCP that connected into ST#17 which was removed per plan on 11th Ave E. The top of the existing 12" x 18" ERCP is at an elevation of 11.21'. Even though, the plans show ST#17 being a manhole structure, it is actually a grated inlet.

Contractor Recommendation:

Ferreira proposes that a conflict box grated inlet manhole to be installed to connect the existing 12" x 18" ERCP into the proposed drainage system at the ST#17 removal location (Sta. 34+10).

May the EOR please provide an engineered-design for the grate inlet conflict box that will need to be installed?

Owner / Engineer Response:

Contractor shall install the grate inlet box following City detail SR-20, shown below. The box can either be CIP or precast and shall have the following elevations:
Top Grate = 14.01'
18" Inv. East = 10.74'
18" Inv. West = 10.74'
12" x 18" Inv. South = 9.98' (based on Contractor provided survey)
Floor of Box = 9.48'
Contractor shall field verify inverts and use FDOT design details shown below for pipe to structure connections.

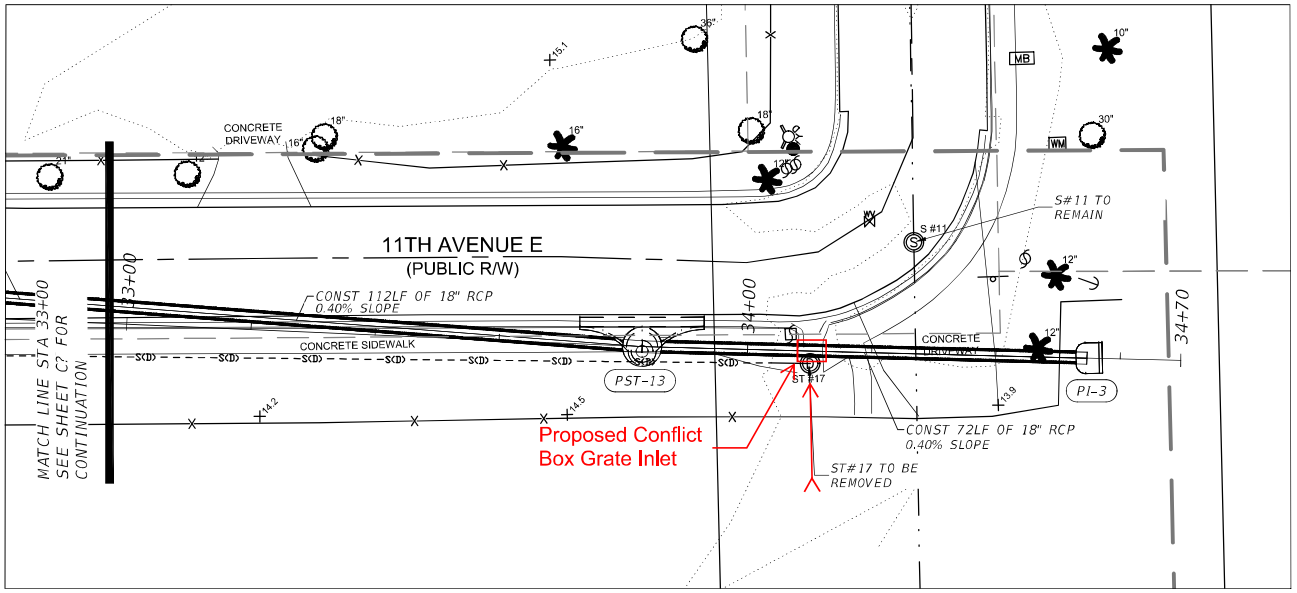

11th Avenue E Alignment
31+00.00–34+69.76

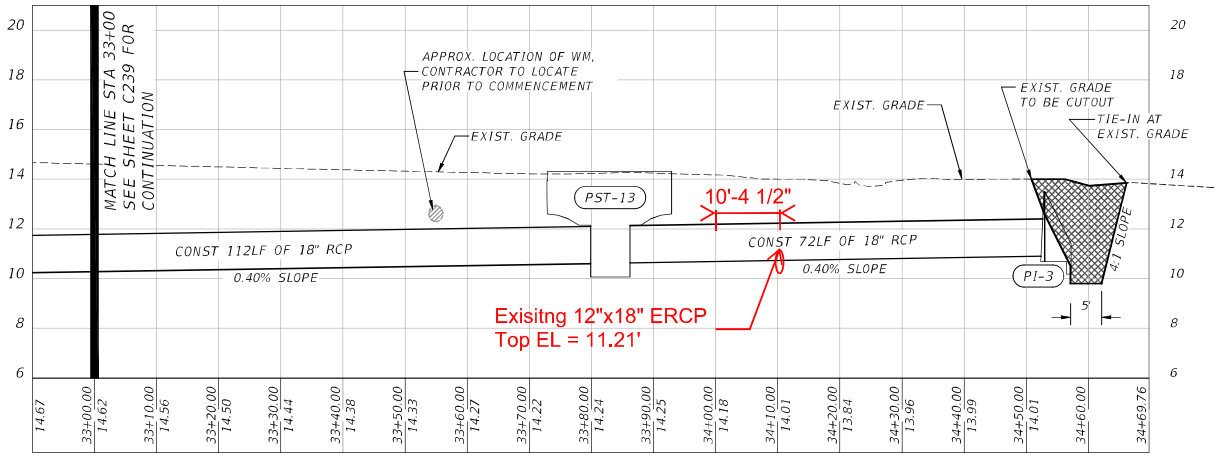

LIST OF STRUCTURES:

PST-13
CURB INLET
RIM = 14.00'
W 18" RCP INV = 10.62'
S 18" RCP INV = 10.62'

PI-3
CROSS DRAIN
W 18" RCP INV = 10.91'

ST#17
REMOVED & RELOCATED
W/ PST-13

SEAL

Digitally signed by Gregory W. Corning
Date: 2024.12.03 20:00:52 -05'00'

GREG W. CORNING
FL. REG. NO. 79293

REV.	YYYY-MM-DD	DESCRIPTION	DESIGNED	PREPARED	REVIEWED	APPROVED
100%	2024-07-26	100% SUBMITTAL	T.D.	J.A.M.	T.D.	G.W.C.

CLIENT
CITY OF BRADENTON
1411-9th STREET WEST
BRADENTON, FL 34205

CONSULTANT
USA ENVIRONMENT & INFRASTRUCTURE, INC.
5845 N.W. 158th STREET
MIAMI LAKES, FL 33014
PHONE: (305) 826-5588

PROJECT
CITY OF BRADENTON
EASTSIDE DRAINAGE IMPROVEMENTS

TITLE
PLAN & PROFILE

PROJECT NO.
600621

REV.

21 of 21

C-240

101

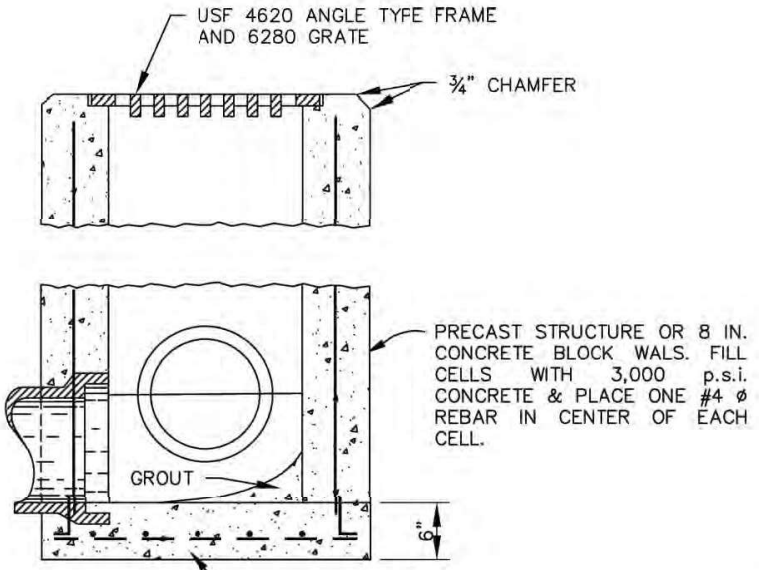

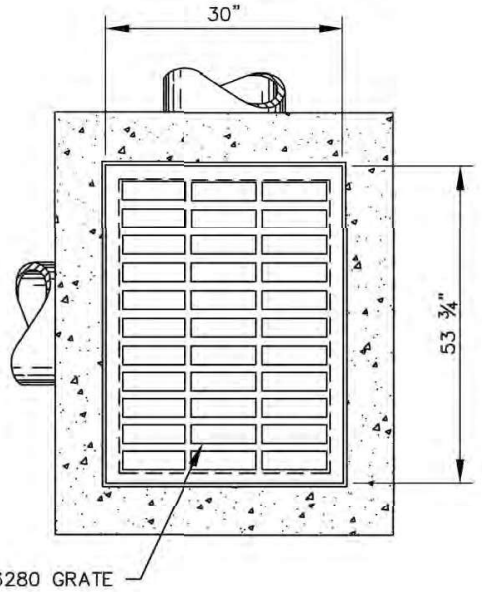

NOTES:

1. All concrete to be 3,000 psi, with fiber mesh reinforcing.
2. All steel bars shall have 1 1/4" minimum cover unless otherwise shown and shall be hooked where indicated. Horizontal steel shall be lapped a minimum of 24 bar diameters at corners. On precast units, floor slabs may be secured to structure walls by no. 4 dowel bars (a minimun of 6 dowels) pushed into the wet concrete after the floor slab is placed.
3. Chamfer all exposed edges 3/4".

REV.	DATE	DESCRIPTION	BY
1	5/2024	CHANGED FRAME AND GRATE	SIBE

CITY OF BRADENTON, FLORIDA
PUBLIC WORKS AND UTILITIES
DEPARTMENT OF ENGINEERING

DRAINAGE

GRATE INLET

DATE 01/16

SHEET NO. SR-20

SEAL

Digitally signed by Gregory W. Corning
Date: 2024.12.03 19:58:56 -05'00'

GREG W. CORNING
FL. REG. NO. 79293

PROJECT
CITY OF BRADENTON
EASTSIDE DRAINAGE IMPROVEMENTS

TITLE
DETAILS

PROJECT NO.
600621

REV. of

C-301

CLIENT
CITY OF BRADENTON
1411-9th STREET WEST
BRADENTON, FL 34205

CONSULTANT

USA ENVIRONMENT & INFRASTRUCTURE, INC.
5845 N.W. 158th STREET
MIAMI LAKES, FL 33014
PHONE: (305) 822-5588

REV.	YYYY-MM-DD	DESCRIPTION	DESIGNED	PREPARED	REVIEWED	APPROVED
100%	2024-07-26	100% FOR CONSTRUCTION	T.D.	J.A.M.	T.D.	G.W.C.

IF THIS MEASUREMENT DOES NOT MATCH WHAT IS SHOWN, THE SHEET SIZE HAS BEEN MODIFIED FROM ANSI D

Path: ##

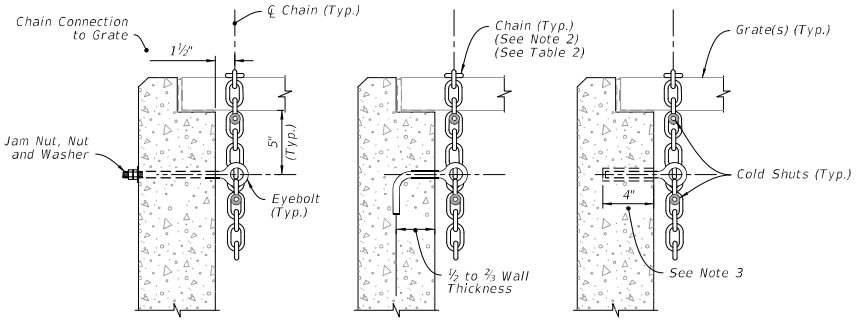

NOTES:

1. Install either a ½" Ø x 1" Diameter Threaded Straight (Thru-Bolt), a J-Type, or an adhesive Bonded Anchor Eyebolt.
2. Install a 5/16" Chain and 3/16" Cold Shuts. When chaining two grates together provide adequate loop for easy handling.
3. Install adhesive bonded anchor option with a minimum of 4" embedment, and in accordance with Specification 416.

TABLE 2
EYEBOLT AND CHAIN REQUIREMENTS

Index Number	Inlet Type	Eye-Bolts	Length of Chain	Handling & Remarks
425-030	1	1	4'-0"	Slide & Spin
	2	2	2 @ 4'-0"	Slide & Spin
425-031	N/A	1	3'-8"	Slide or Slide & Spin
425-032	N/A	1	4'-0"	Slide & Spin
425-040	S	1	4'-0"	Slide & Spin
425-041	V	1	4'-0"	Slide & Spin
425-050	A	1	3'-0"	Slide
425-051	B	1	5'-0"	Slide & Spin
425-052	C	1	2'-6"	Slide & Spin
	D	1	2'-6"	Slide & Spin
	E	2	2 @ 2'-6"	Slide & Spin
	H	2	2 @ 2'-6"	Flip Ctr. Grate and Slide & Spin Single Free Grate
			1 or 2 @ 1'-6"	Center Grate(s) Chained to One End Grate
425-053	F	1	3'-6"	Flip or Slide & Spin
	G	1	6'-0"	Slide
			2'-0"	Lifting Loop
425-054	J	1	4'-0"	Slide & Spin

LOCKING GRATES TO INLETS

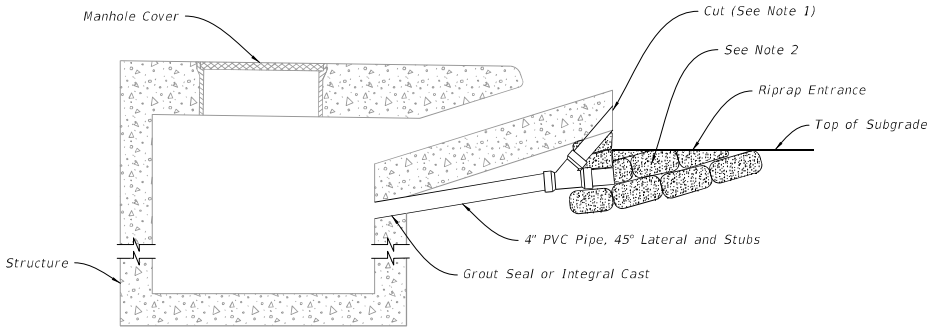

NOTES:

1. Bevel cut upper stub to match forming for apron face. Capping or plugging of upper stub is not required. Remove friable base material at stub opening to permit covering of opening with structural course material.
2. Remove riprap, cement PVC cap on lower stub, and place compacted fill in entrance prior to placing base material.

SUBGRADE AND BASE TEMPORARY DRAINS

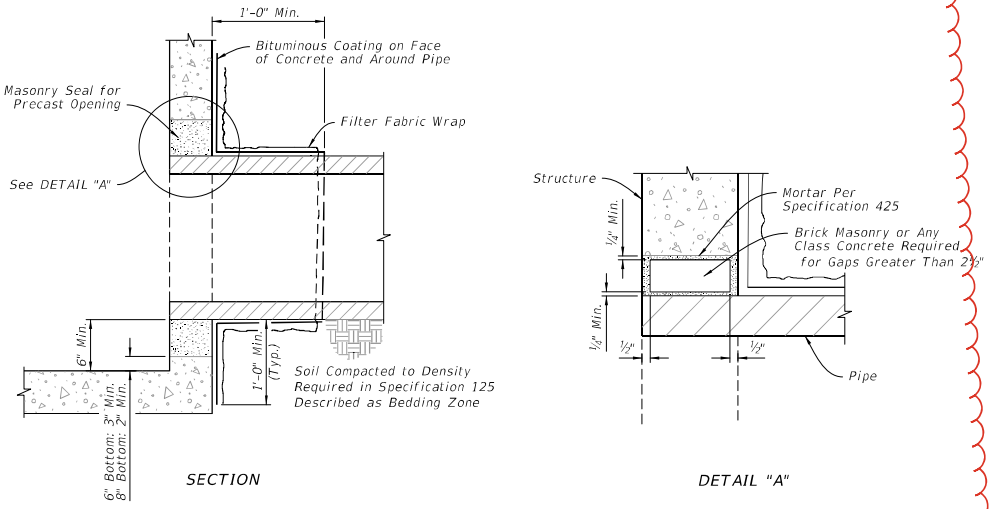

PIPE TO STRUCTURE FILTER FABRIC WRAP

LOCKING GRATES, SUBGRADE AND BASE TEMPORARY DRAINS, AND PIPE TO STRUCTURE FILTER FABRIC WRAP

LAST REVISION	REVISION	DESCRIPTION:	FDOT	FY 2023-24 STANDARD PLANS	SUPPLEMENTARY DETAILS FOR DRAINAGE STRUCTURES	INDEX	SHEET
11/01/20						425-001	3 of 8

10/6/2022 1:35:21 PM

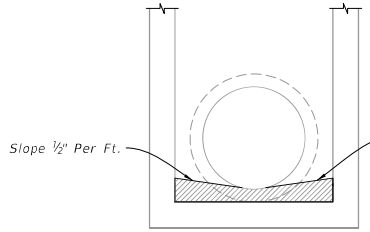

NOTE: For all structures unless excluded by special detail.

DRAINAGE STRUCTURE INVERT

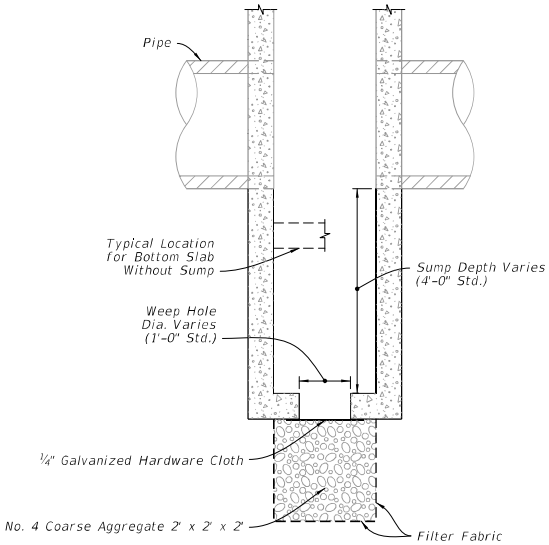

NOTES:

1. Construct sumps in inlets and manholes connecting to French Drains unless excluded in the Plans.
2. Construct sumps only where called for in the Plans at all other locations.
3. Construct weep holes in sump bottom only where called for in the Plans.

SUMP BOTTOM

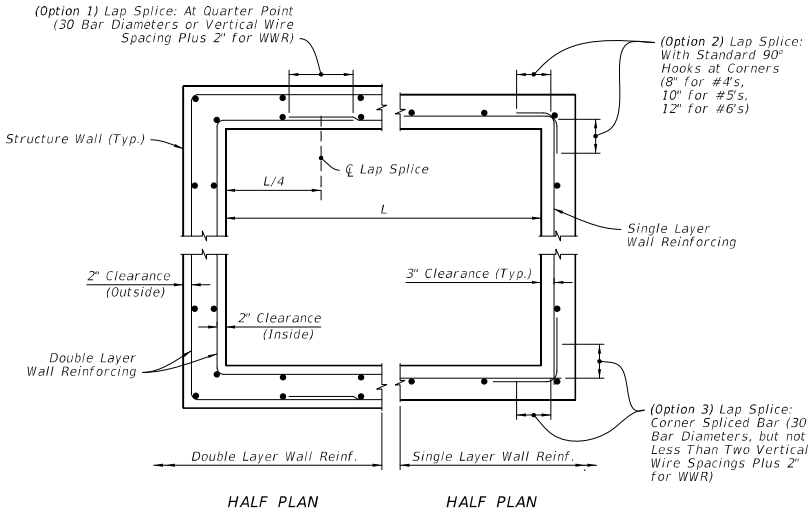

WALL REINFORCING SPLICE DETAILS

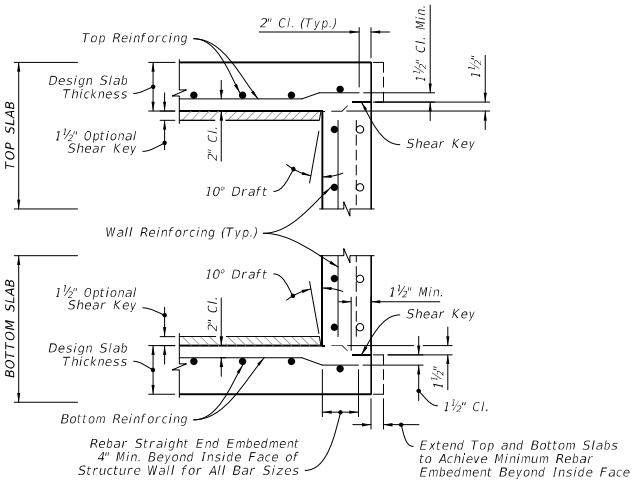

NOTES:

1. See Sheet 6 for optional construction joints.
2. Bend bars as required to maintain cover.

TYPICAL SLAB TO WALL DETAILS
(PRECAST STRUCTURE SHOWN)

DRAINAGE STRUCTURE INVERT, SUMP BOTTOM, WALL REINFORCING SPLICE DETAILS, AND TYPICAL SLAB TO WALL DETAILS

LAST REVISION	REVISION	DESCRIPTION:	FDOT	FY 2023-24 STANDARD PLANS	SUPPLEMENTARY DETAILS FOR DRAINAGE STRUCTURES	INDEX	SHEET
11/01/20						425-001	4 of 8

10/6/2022 1:35:22 PM

FERREIRA

REQUEST FOR INFORMATION (RFI)	RFI # 14	Page #

Contract No.	Job #	Contract Name:
30358200-563000-22808	4502	City of Bradenton - Eastside Drainage Improvements

Contractor's Request for Information

Requested by:	Date Requested:	Attn:
Kyle B. Renz	10/29/2025	Brian Norman - City of Bradenton

SUBJECT	Water Main Conflict with 18" RCP between PCI-16 & PCI-17 on 11th Ave E
SPEC SECTION	02630 - Storm Drainage
DRAWINGS	C-239

Information Requested:

On C-239, at approximately Sta. 31+63 the elevation of the existing water main is not accurately represented between PCI-16 & PCI-17 on 11th Ave E. Upon the discovery in the field, the top of the 16" water main is at an elevation of 10.73' and the top of the proposed 18" RCP is at an elevation of 11.60'. This concludes the existing water main is in direct conflict with the proposed RCP alignment.

Contractor Recommendation:

Ferreira proposes that a conflict box manhole to be installed around the water main to continue the proposed drainage system between PCI-16 & PCI-17.

May the EOR please provide an engineered-design for the conflict box that will need to be installed?

Owner / Engineer Response:

Contractor shall install the manhole following City detail SS-1, shown below. The manhole shall be CIP to protect water main and shall have the following elevations:
Top of Manhole = 15.17'
18" Inv. NE = 9.77'
18" Inv. SW = 9.77'
16" WM Top = 10.73' (based on Contractor provided survey)
16" WM Bottom = 9.40 (based on Contractor provided survey)
Floor of Box = 8.9'
Contractor shall field verify inverts and use County and FDOT design details shown below for pipe support and structure connections.

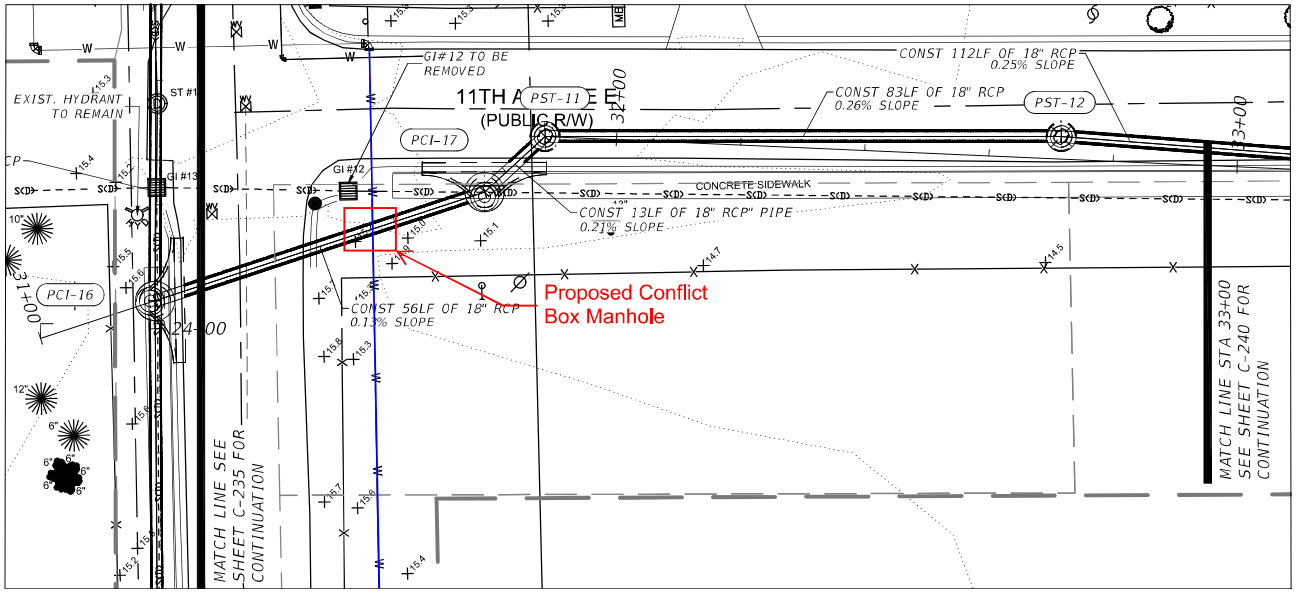

11th Avenue E Alignment
31+00.00–34+69.76

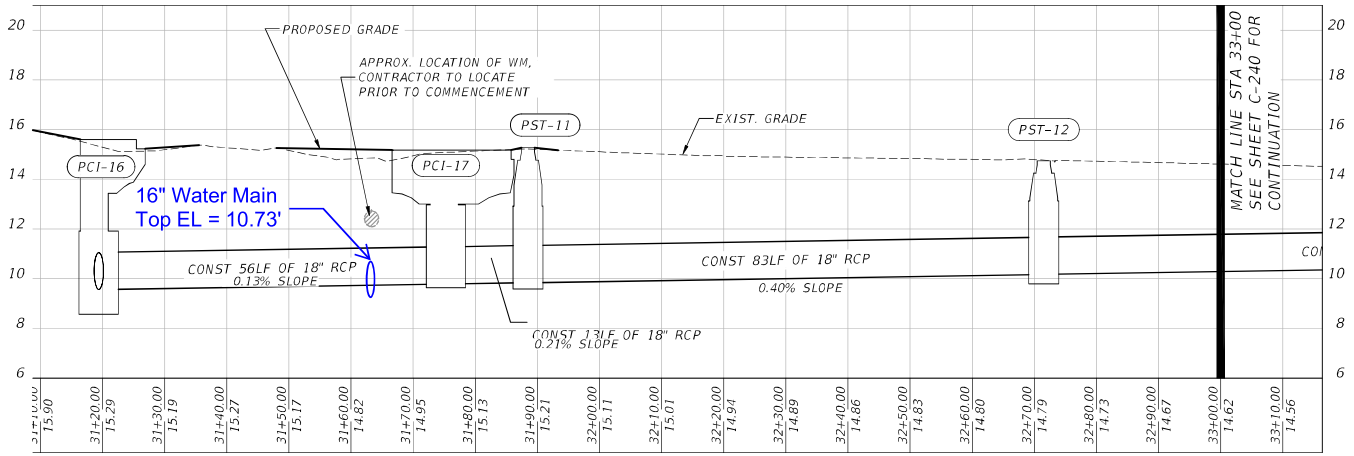

LIST OF STRUCTURES:

PCI-16
CURB INLET
RIM = 15.60'
N 18" RCP INV = 9.56'
NE 18" RCP INV = 9.56'
S 18" RCP INV = 9.56'

PCI-17
CURB INLET
RIM = 15.17'
NE 18" RCP INV = 9.78'
SW 18" RCP INV = 9.78'

PST-11
PRECAST MANHOLE
RIM = 15.27'
SW 18" RCP INV = 9.84'
E 18" RCP INV = 9.84'

PST-12
PRECAST MANHOLE
RIM = 14.74'
W 18" RCP INV = 10.17'
E 18" RCP INV = 10.17'

ST#18
REMOVED

GI#12
RELOCATED & REPLACED W/ PCI-17

GI#13
RELOCATED & REPLACED W/ PCI-16

SEAL

Digitally signed by Gregory W. Corning
Date: 2024.12.03 20:01:47 -05'00'

GREG W. CORNING
FL. REG. NO. 79293

REV.	YYYY-MM-DD	DESCRIPTION	DESIGNED	PREPARED	REVIEWED	APPROVED
100%	2024-07-26	100% SUBMITTAL	T.D.	J.A.M.	T.D.	G.W.C.

CLIENT
CITY OF BRADENTON
1411-9th STREET WEST
BRADENTON, FL 34205

CONSULTANT
USA ENVIRONMENT & INFRASTRUCTURE, INC.
5845 N.W. 158th STREET
MIAMI LAKES, FL 33014
PHONE: (305) 826-3588

PROJECT
CITY OF BRADENTON
EASTSIDE DRAINAGE IMPROVEMENTS

TITLE
PLAN & PROFILE

PROJECT NO.
600621

REV. 20 of 21

C-239

RFI-4502-014
11th Ave E Conflict @ Sta. 31+63

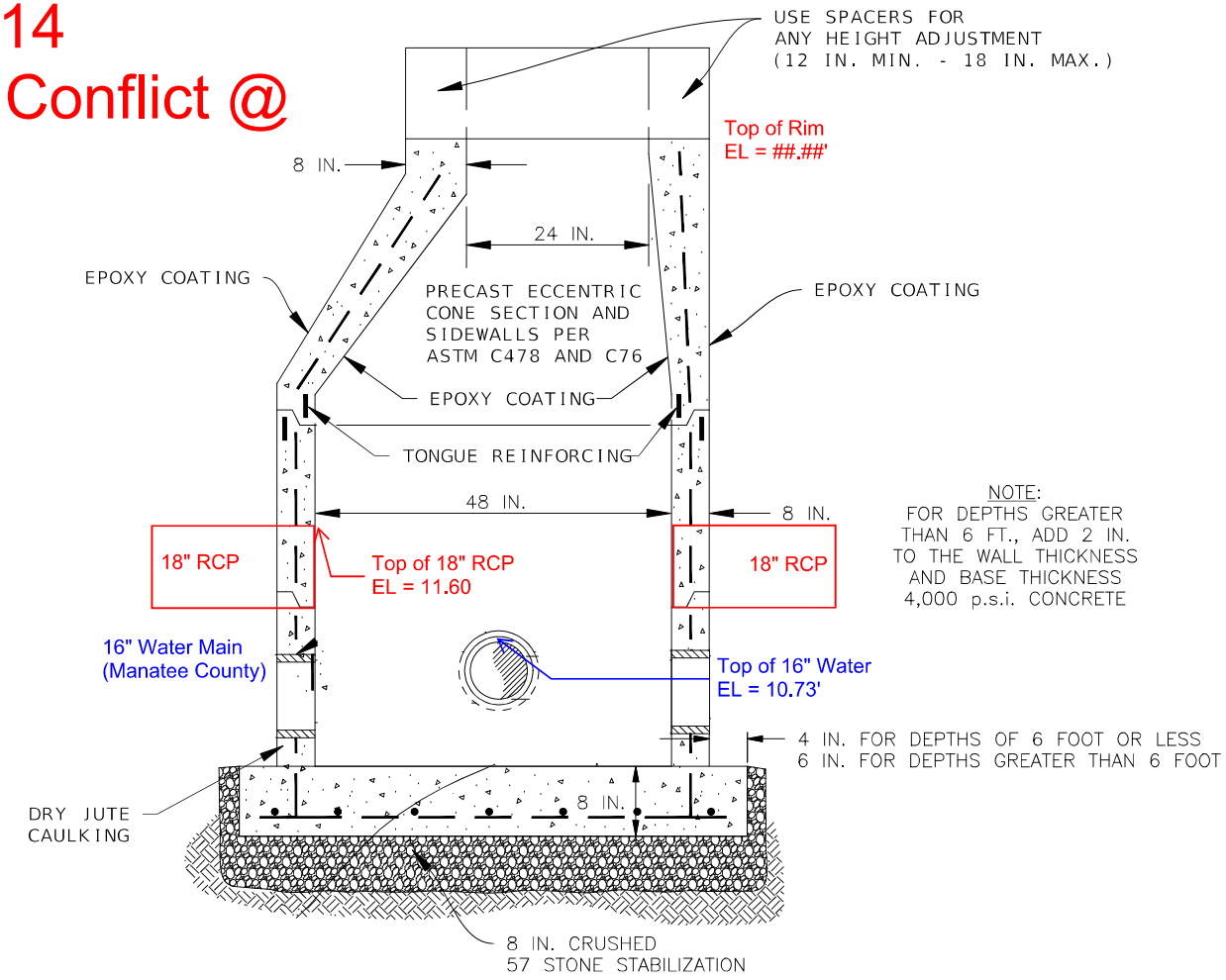

NOTE:
FOR DEPTHS GREATER THAN 6 FT., ADD 2 IN. TO THE WALL THICKNESS AND BASE THICKNESS
4,000 p.s.i. CONCRETE

REV.	DATE	DESCRIPTION	BY
2	JAN., 2017	ADDED 57 STONE	SIBE
1	7/2013	ADDED SPACER AND LINK SEAL	SIBE

CITY OF BRADENTON, FLORIDA
PUBLIC WORKS AND UTILITIES
DEPARTMENT OF ENGINEERING

SANITARY SEWER
PRECAST MANHOLE

DATE 2/07
SHEET NO. SS-1

SEAL

GREG W. CORNING
FL. REG. NO. 79293

REV.	YYYY-MM-DD	DESCRIPTION	DESIGNED	PREPARED	REVIEWED	APPROVED
100%	2024-07-26	100% FOR CONSTRUCTION	T.D.	J.A.M.	T.D.	G.W.C.

CLIENT
CITY OF BRADENTON
1411-9th STREET WEST
BRADENTON, FL 34205

CONSULTANT
USA ENVIRONMENT & INFRASTRUCTURE, INC.
5945 N.W. 158th STREET
MIAMI LAKES, FL 33014
PHONE: (305) 826-2588

PROJECT
CITY OF BRADENTON
EASTSIDE DRAINAGE IMPROVEMENTS

TITLE
DETAILS

PROJECT NO.
600621

REV.

C-310

IF THIS MEASUREMENT DOES NOT MATCH WHAT IS SHOWN, THE SHEET SIZE HAS BEEN MODIFIED FROM ANSI B

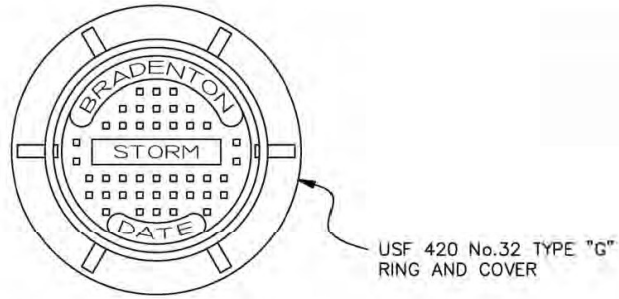

PLAN VIEW

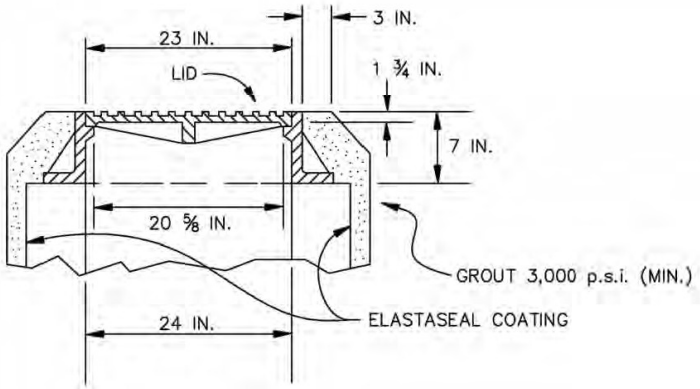

U.S.F. DRAWING No.32, TYPE "G"

SECTION VIEW

REV.	DATE	DESCRIPTION	BY

CITY OF BRADENTON, FLORIDA
PUBLIC WORKS AND UTILITIES
DEPARTMENT OF ENGINEERING

DRAINAGE	DATE
TRAFFIC BEARING	01/17
FRAME AND COVER	SHEET NO. SR-17

SEAL

GREG W. CORNING
FL. REG. NO. 79293

PROJECT
CITY OF BRADENTON
EASTSIDE DRAINAGE IMPROVEMENTS

TITLE
DETAILS

PROJECT NO.
600621

REV. of C-311

CLIENT
CITY OF BRADENTON
1411-9th STREET WEST
BRADENTON, FL 34205

CONSULTANT
USA ENVIRONMENT & INFRASTRUCTURE, INC.
5945 N.W. 158th STREET
MIAMI LAKES, FL 33014
PHONE: (305) 826-5588

REV.	YYYY-MM-DD	DESCRIPTION	DESIGNED	PREPARED	REVIEWED	APPROVED
100%	2024-07-26	100% FOR CONSTRUCTION	T.D.	J.A.M.	T.D.	G.W.C.

IF THIS MEASUREMENT DOES NOT MATCH WHAT IS SHOWN, THE SHEET SIZE HAS BEEN MODIFIED FROM: ANSI B

Path: ##########################| File Name: City of Bradenton_Details.dwg | Last Edited By: jose.design station Date: 2024-07-26 Time:6:09:46 PM | Printed By: Jose Design Station Date: 2024-07-27 Time:3:07:36 PM

GENERAL NOTES:

1. Work with Index 425-001 and Index 425-010.

2. Use Class II Concrete.

3. Maximum opening for pipe shall be the pipe OD plus 6". Mortar used to seal the pipe into the opening will be of such mix that shrinkage will not cause leakage into or out of the structure.

4. If a conflict with a potable water supply line is discovered during construction, submit the following to Florida Department of Environmental Protection (FDEP) District Administrator For Drinking Water prior to constructing conflict structure:

   a. Plans Revision(s)
   b. Justification describing inordinate cost and practical avoidance
   c. Upon request, Utility Agency Owner (UAO) supporting documentation for cost of relocation or adjustment

Potable water supply lines passing through a drainage structure must be in compliance with Chapter 62-555.314(3) F.A.C. This Index and rule citation provide accepted methods for addressing conflicts when they cannot be reasonably avoided.

Website for District FDEP Drinking Water Contacts:
https://floridadep.gov/water/source-drinking-water/content/organization-drinking-water-program

TABLE OF CONTENTS:

Sheet	Description
1	General Notes and Contents
2	Utility Conflict Condition I and II Details

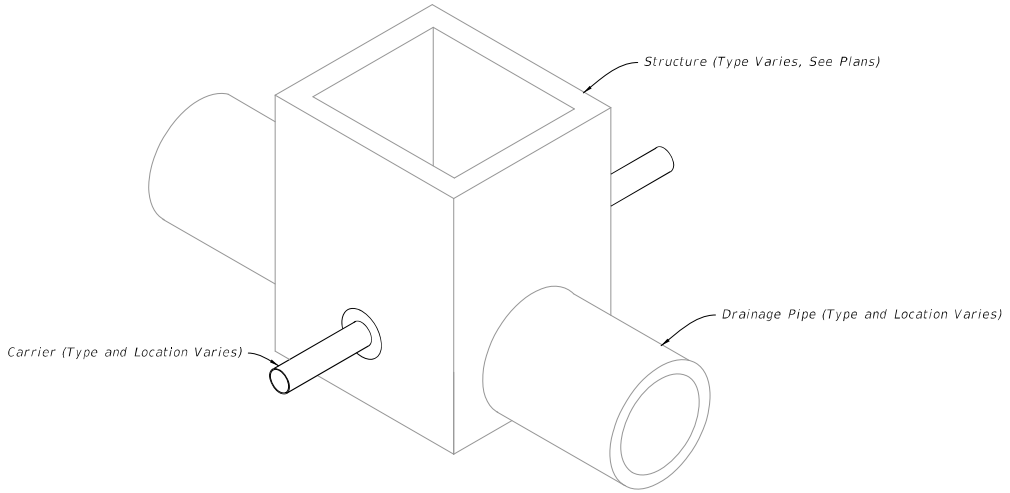

UTILITY CONFLICT
(Condition I Shown, Condition II Similar)

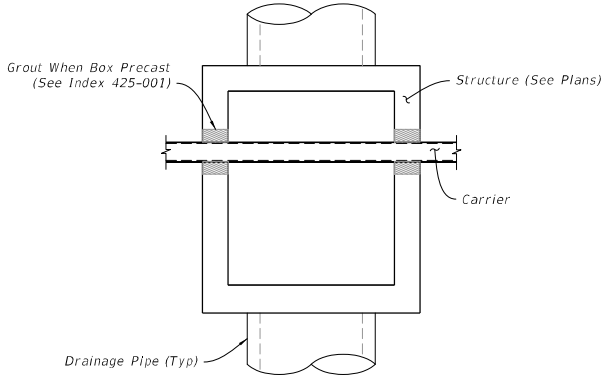

PLAN

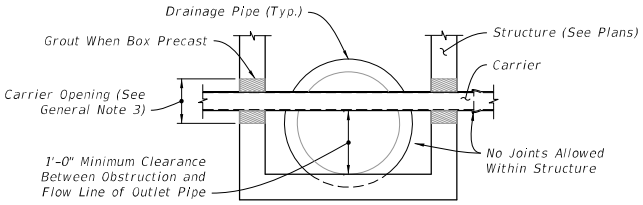

FRONT ELEVATION

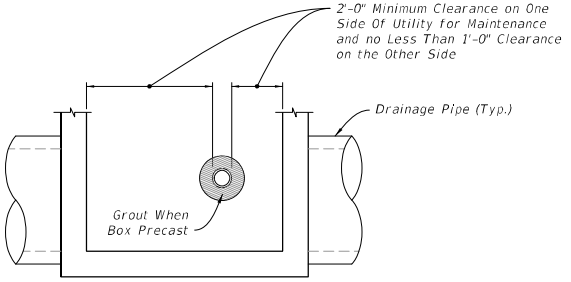

SIDE ELEVATION

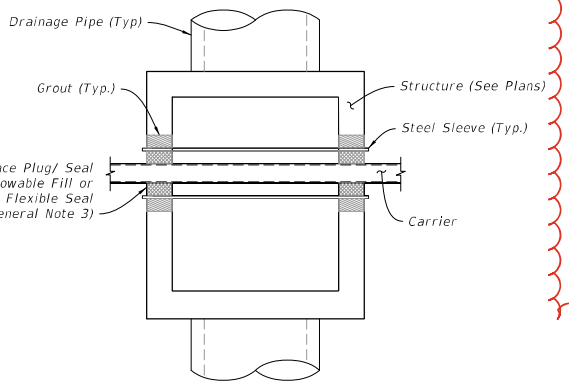

PLAN

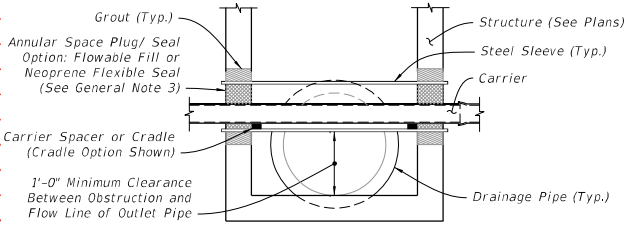

FRONT ELEVATION

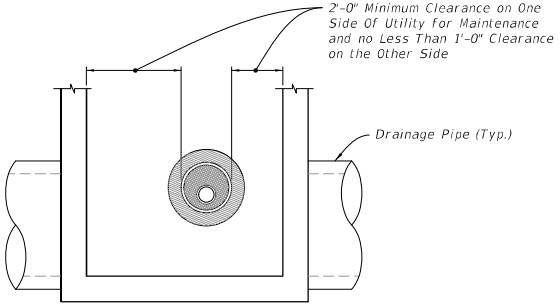

SIDE ELEVATION

UTILITY CONFLICT CONDITION I
(Nonpressure or Nonfluid Carrier Installations)

UTILITY CONFLICT CONDITION II
(Pressure or Fluid Carrier Installations)

UTILITY CONFLICT CONDITION I AND II DETAILS

LAST REVISION	REVISION	DESCRIPTION:				
11/01/20			FDOT FY 2022-23 STANDARD PLANS	UTILITY CONFLICT THRU DRAINAGE STRUCTURES	INDEX 425-080	SHEET 2 of 2

9/21/2021 1:28:35 PM

FERREIRA CONSTRUCTION SOUTHERN DIVISION CO., INC.

CONTRACT CHANGE ORDER REQUEST

Project Name: Eastside Drainage Improvements | Job # 4502

Date: February 2, 2026

Contract # 30358200-563000-22808
C.O. Request # CO-4502-007

Proposed Change: Tree Removal & Chain-Link Fence Replacement

ITEM	DESCRIPTION	UNIT	QTY.	UNIT PRICE	TOTAL
	Demo Chain-Link Fence	LF	165	$ 35.00	$ 5,775.00
	Clearing Trees & Grading for Fence	EA	6	$ 4,087.28	$ 24,523.71
	Black Vinyl Chain-Link Fence	LF	165	$ 88.10	$ 14,536.50
					$ -
				Total	$ 44,835.21

FERREIRA

REQUEST FOR INFORMATION (RFI)		RFI # 17	Page #
Contract No. 30358200-563000-22808	**Job #** 4502	**Contract Name:** City of Bradenton - Eastside Drainage Improvements	

Contractor's Request for Information

Requested by:	**Date Requested:**	**Attn:**
Kyle B. Renz	12/19/2025	Brian Norman - City of Bradenton

SUBJECT	Fenceline Conflicts with existing trees & Tie into Existing Fence
SPEC SECTION	01745 Misc. Work, Restoration & Clean-Up
DRAWINGS	C-000 & C-100

Information Requested:

On C-000, there are 5 trees in conflict with the proposed fence line around the retention pond. The branches and/or the roots of these trees will need to be cut to allow for construction of the fence.

Also, the plans call out for the new black vinyl chain-link fence to tie into the existing galvanized fence. The existing fence is in poor condition and is not in good condition at the tie-in locations.

Contractor Recommendation:

Ferreira Construction proposes that the five (5) trees marked out in the pictures be removed to allow the install of fence line & the existing fence to be replaced to match the new black vinyl fence around the retention pond. Ferreira can provide a proposal for this scope of work upon request.

Owner / Engineer Response:

City will send out landscaper the week of 1/5/2026 to evaluate the trees marked and determine whether they should be removed or the fence to be realigned to avoid impacts.

Ferreira to provide cost proposal to City for review and approval for replacement of existing fence along west side of pond.

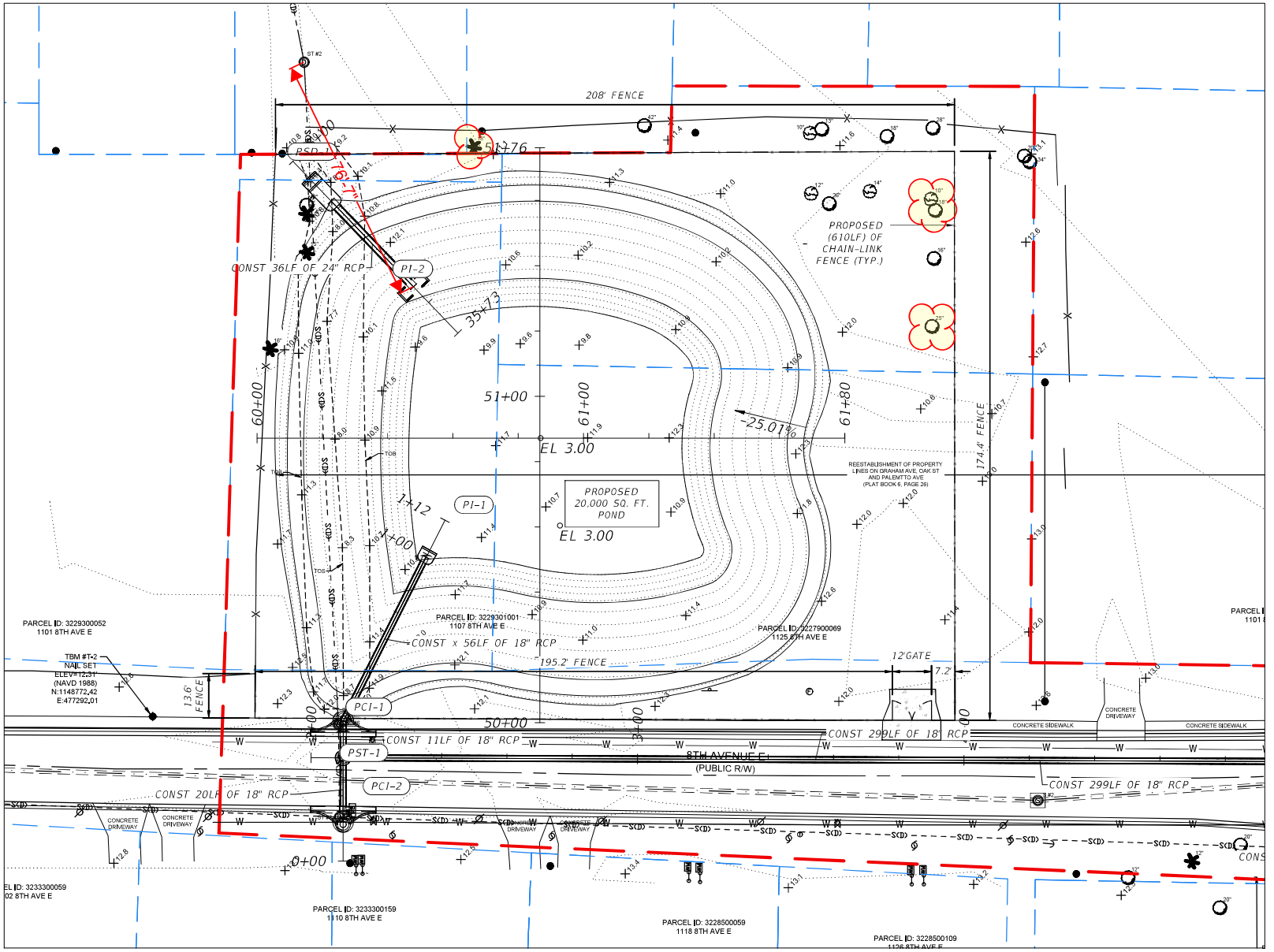

N

0 15' 30'
HORIZONTAL
SCALE: 1"=30'-0"

REV.	YYYY-MM-DD	DESCRIPTION	DESIGNED	PREPARED	REVIEWED	APPROVED
100%	2024-07-26	100% SUBMITTAL	T.D.	J.A.M.	T.D.	G.W.C.

SEAL

GREG W. CORNING
FL. REG. NO. 79293

CLIENT
CITY OF BRADENTON
1411-9th STREET WEST
BRADENTON, FL 34205

CONSULTANT
USA ENVIRONMENT & INFRASTRUCTURE, INC.
5845 N.W. 158th STREET
MIAMI LAKES, FL 33014
PHONE: (305) 826-3588

PROJECT
CITY OF BRADENTON
EASTSIDE DRAINAGE IMPROVEMENTS

TITLE
POND LAYOUT

PROJECT NO.
600621

REV.

1 of 1

C-000

IF THIS MEASUREMENT DOES NOT MATCH WHAT IS SHOWN, THE SHEET SIZE HAS BEEN MODIFIED FROM ANSI B

Path: ##| File Name: City of Bradenton_Blake_FDOT (#22225).dwg | Last Edited By: jose.design.station Date: 2025-09-22 Time:10:11:18 AM | Printed By: Jose Design Station Date: 2025-09-22 Time:10:11:31 AM

FERREIRA CONSTRUCTION SOUTHERN DIVISION CO., INC.

CONTRACT CHANGE ORDER REQUEST

Project Name: Eastside Drainage Improvements | Job # 4502
City of Bradenton - Public Works & Utilities

Date: February 9, 2026

Contract # 30358200-563000-22808
C.O. Request # CO-4502-008

Proposed Change: MH007-B Retrofitting & Construction Easement Restoration

ITEM	DESCRIPTION	UNIT	QTY.	UNIT PRICE	TOTAL
	Remove & Dispose Existing Stormwater Pipes	LF	25	$ 62.00	$ 1,550.00
	Stormwater Piping - 24" RCP	LF	40	$ 312.00	$ 12,480.00
	MH007-B Retrofitting - 15" to 24"	LS	1	$ 68,368.99	$ 68,368.99
	Sodding	SY	100	$ 12.55	$ 1,255.00
	Stormwater Structure - Cross Drain MES	EA	-1	$ 3,500.00	$ (3,500.00)
				Total	$ 80,153.99

FERREIRA

REQUEST FOR INFORMATION (RFI)	RFI # 6	Page #

Contract No.	Job #	Contract Name:
30358200-563000-22808	4502	City of Bradenton - Eastside Drainage Improvements

Contractor's Request for Information

Requested by:	Date Requested:	Attn:
Kyle B. Renz	05/28/2025	Brian Norman - City of Bradenton

SUBJECT	Retention Pond Outflow Pipe Re-Design to Exisitng MH007-B
SPEC SECTION	02630 Storm Drainage
DRAWINGS	C-220

Information Requested:

On Drawing C-220, PSD-1 is to be installed as a Side Drain Miter End Structure (MES) at the end of the 24" RCP from PI-2. Upon field investigation, there is an existing 15" RCP which may potential be in conflict with the install of PSD-1. The existing 15" RCP leads into a manhole (MH007-B) with in located within the property lines of the 1118 7th Ave E parcel.

Instead of installing PSD-1 and the proposed ditch leading to the existing 15" RCP, the City of Bradenton would like the new 24" RCP to be connected directly into MH007-B.

Contractor Recommendation:

In order for Ferreira to connect the new 24" RCP into the existing manhole MH007-B, the existing 15" RCP will need to be removed & replaced with 24" RCP, and PSD-1 will need to be omitted from the design since the side drain MES will no longer be required.

May the City of Bradenton please provide survey data for the existing manhole structure, MH007-B as well as a design change that omits PSD-1 and shows a continuation of the 24" RCP into MH007-B?

Owner / Engineer Response:

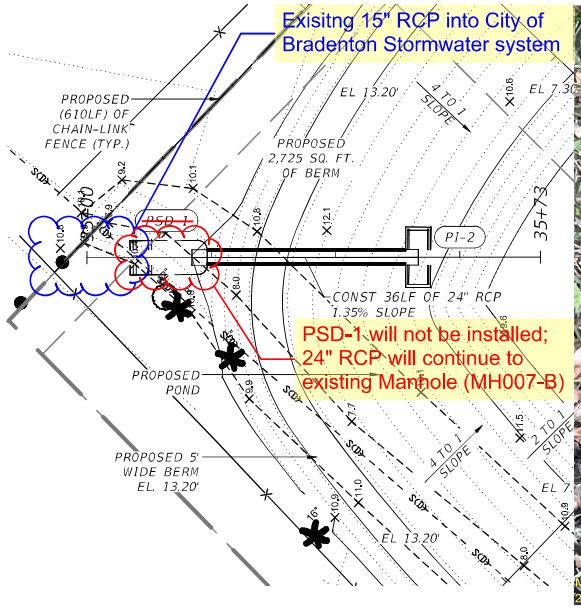

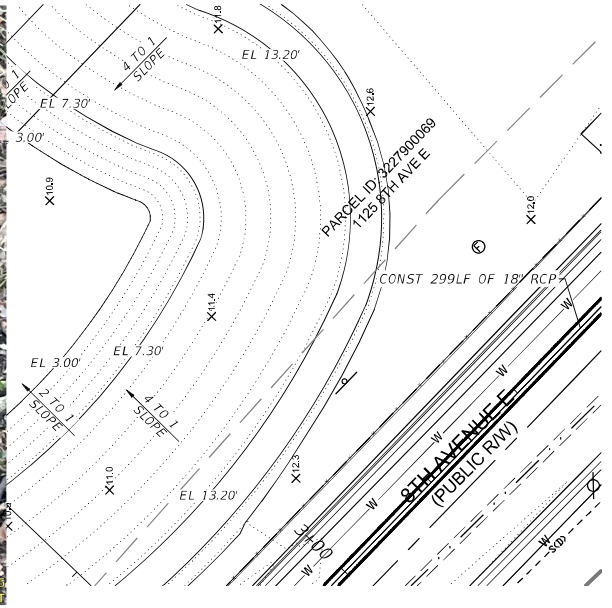

Pond Outflow Alignment
35+00.00–35+73.02

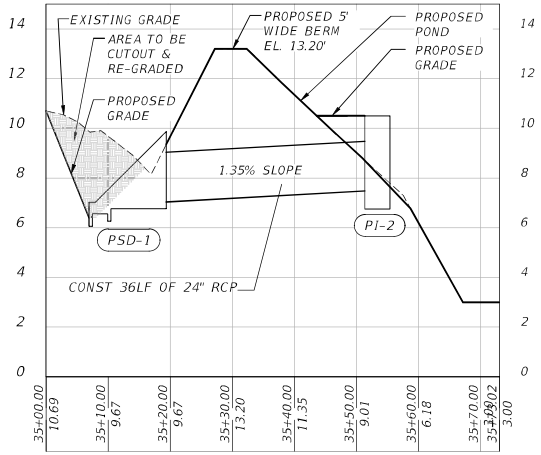

LIST OF STRUCTURES:

PSD-1
SIDE DRAIN MES
SE 24" RCP INV = 7.00'

PI-2
CATCH BASIN
WIER = 9.33'
TOP = 10.50'
NW 24" RCP INV = 7.50'

SEAL

Digitally signed by Gregory W. Corning
Date: 2024.12.03 20:15:22 -05'00'

GREGORY W. CORNING
FL. REG. NO. 79293

CLIENT
CITY OF BRADENTON
1411-9th STREET WEST
BRADENTON, FL 34205

CONSULTANT
USA ENVIRONMENT & INFRASTRUCTURE, INC.
5845 N.W. 158th STREET
MIAMI LAKES, FL 33014
PHONE: (305) 826-8588

REV.	YYYY-MM-DD	DESCRIPTION	DESIGNED	PREPARED	REVIEWED	APPROVED
100%	2024-07-26	100% SUBMITTAL	T.D.	J.A.M.	T.D.	G.W.C.

PROJECT
CITY OF BRADENTON
EASTSIDE DRAINAGE IMPROVEMENTS

TITLE
PLAN & PROFILE

PROJECT NO.
600621

REV.

1 of 21

C-220

Path: R:\Projects\Bradenton_Eastside_Drainage_Improvements\Design\Plans\Sheets\Plan & Profile\C-220 Pond Outflow Alignment.dwg | Last Edited By: jose.delgado | Date: 2024-07-26 | Time: 2:59:19 PM | Printed By: Jose Delgado | Station: Date: 2024-07-27 | Time: 2:59:43 PM
THE USE NAME: City of Bradenton_Eastside_Drainage_Improvements (3502)
IF THIS MEASUREMENT DOES NOT MATCH WHAT IS SHOWN, THE SHEET SIZE HAS BEEN MODIFIED FROM: ANSI D

FERREIRA CONSTRUCTION SOUTHERN DIVISION CO., INC.
13000 SE Flora Avenue
Hobe Sound, FL 33455
772-286-5123

CUSTOMER: City of Bradenton **DATE: 3/10/2026**

ATTENTION: Brian Norman - Public Works & Utilities **FCC JOB #: 40-4502**

PROJECT: Eastside Drainage Improvements **Cost Codes:**

LOCATION: Retention Pond

SCOPE OF EXTRA: CO-4502-008 | Retrofit Existing Manhole

CHECK ONE:

- [X] Quote
- [ ] Time and Material Amount
- [ ] Backcharge

LABOR

Classification	Hours Reg.	Hours Premium	Rate Reg.	Rate Premium	Labor Cost
Foreman	90.0	0.0	$ 45.00	$ 67.49	$ 4,049.55
Laborer	90.0	0.0	$ 34.17	$ 51.25	$ 3,074.85
Laborer	90.0	0.0	$ 34.17	$ 51.25	$ 3,074.85
Laborer	27.0	0.0	$ 34.17	$ 51.25	$ 922.46
Operator	27.0	0.0	$ 37.31	$ 55.96	$ 1,007.24
Operator	45.0	0.0	$ 37.31	$ 55.96	$ 1,678.73
Total Hours	369.0	0.0			
				Total Direct Labor	$ 13,807.68

PAYROLL TAXES AND INSURANCE

	Rate	Cost
F.I.C.A.	7.65%	$ 1,056.29
Workman's Compensation Insurance	0.80%	$ 110.46
Florida Unemployment	4.72%	$ 651.72
Workman's Compensation Insurance	21.04%	$ 2,905.14
General Liability Insurance	3.50%	$ 483.27
Umbrella	2.75%	$ 379.71
	40.46%	
Total Taxes and Insurance		$ 5,586.59

LABOR FRINGE BENEFITS

Classification	Hours Reg.	Hours Premium	Rate Reg.	Rate Premium	Fringes Cost
Foreman	90.0	0.0	$ 11.10	$ 11.10	$ 999.00
Laborer	90.0	0.0	$ 11.10	$ 11.10	$ 999.00
Laborer	90.0	0.0	$ 11.10	$ 11.10	$ 999.00
Laborer	27.0	0.0	$ 11.10	$ 11.10	$ 299.70
Operator	27.0	0.0	$ 11.10	$ 11.10	$ 299.70
Operator	45.0	0.0	$ 11.10	$ 11.10	$ 499.50
				Total Fringe Benefits	$ 4,095.90
Total Hours	369.0	0.0			

EQUIPMENT

FCC No.	Type	Hours	Rate	Equipment Cost
	JD 85D Mini-Excavator	45.0	$ 91.40	$ 4,113.00
	930M CAT Loader	27.0	$ 123.35	$ 3,330.45
	8" Dewatering Pump & System	90.0	$ 52.50	$ 4,725.00
	Shoring Box	90.0	$ 39.68	$ 3,571.43
	Dewatering Jetting Pump	9.0	$ 25.10	$ 225.90
	Tool Truck	90.0	$ 76.00	$ 6,840.00
	Foreman Pickup Truck	90.0	$ 76.00	$ 6,840.00
	Total	441.0		
			Total Equipment Cost	$ 29,645.78

SUBCONTRACTORS

Item Description	Subcontractor	Qty.	UOM	Unit Price	Subcontractor Cost
					$ -
				Total Subcontractor Cost	$ -

MATERIALS

Item Description	Vendor	Qty.	UOM	Unit Price	Material Cost
#57 Stone	Allied Trucking	5.0	tn	$ 59.71	$ 298.55
#4 Rebar	White Cap	500	lbs	$ 1.49	$ 743.88
Formboards	White Cap	20.0	ea	$ 69.90	$ 1,397.97
Manhole Ring & Covers	Neenah Foundry	1.0	LS	$ 785.93	$ 785.93
4000 PSI Concrete	Maschmeyer	10.0	CY	$ 225.00	$ 2,250.00
Small Tools & Consumables			3% of Direct Labor		$ 704.71
				Total Material Cost	$ 5,882.47

MARKUP FOR OVERHEAD AND PROFIT

Overhead Markup

Direct Labor		$	13,807.68
Labor Fringe Benefits		$	4,095.90
Material Cost		$	5,882.47
Equipment		$	29,645.78
	subtotal	$	53,431.83
	Markup Percentage		10.00%
		$	5,343.18
Subcontractors		$	-
	Markup Percentage		10.00%
		$	-
	Total Overhead Markup	$	5,343.18

Profit

Direct Labor		$	13,807.68
Labor Fringe Benefits		$	4,095.90
Material Cost		$	5,882.47
Equipment		$	29,645.78
	subtotal	$	53,431.83
	Markup Percentage		7.50%
	Total Profit Markup	$	4,007.39

TOTAL TIME AND MATERIALS

Direct Labor		$	13,807.68
Payroll Taxes and Insurance		$	5,586.59
Labor Fringe Benefits		$	4,095.90
Material Cost		$	5,882.47
Overhead Markup		$	5,343.18
Profit Markup		$	4,007.39
Equipment		$	29,645.78
Subcontractors		$	-
	TOTAL	**$**	**68,368.99**

FERREIRA

REQUEST FOR INFORMATION (RFI)	RFI # 5	Page #

Contract No.	Job #	Contract Name:
30358200-563000-22808	4502	City of Bradenton - Eastside Drainage Improvements

Contractor's Request for Information

Requested by:	Date Requested:	Attn:
Kyle B. Renz	10/29/2025	Brian Norman - City of Bradenton

SUBJECT	Unmarked Water Mains & Sewer Conflict on 13th St E from Tropicana Facility
SPEC SECTION	02630 Storm Drainage
DRAWINGS	C-236

Information Requested:

On drawings C-236, there is an existing water main that is called out to be located by the contractor & was also marked out before Ferreira dug it up to expose the top of the pipe. While digging to the top of the pipe, an additional water was discovered approximately 10 feet to the south from the marked water main. This additional water main is in conflict with the proposed vertical alignment of the proposed 18" RCP on 13th St E.

On 5/20/25, the City of Bradenton performed GPR scans of 13th St E and discovered the following unmarked utilities within 45 feet to the south of the previously marked water main that is shown on the construction drawings.
Two pressurized sewer mains and two additional pressurized water mains.

Contractor Recommendation:

Ferreira recommends that 2 "Conflict Structure" be installed within the limits of these unmarked utilities in lieu of installing the 18" RCP. The top of the Conflict Structures could be designed with a grated top to allow for maximum inflow during high volume rainstorms to allow the runoff water from the aquatic center parking lot & the Tropicana facility to flow into the new system. The City of Bradenton confirmed that the 16" Cast Iron sewer main is abandoned and can be cut out of the way to allow the install of 18" RCP.

May an engineered-design for the Cast-In-Place structures below please be provided to Ferreira?

Conflict Structure #1: CIP manhole around the (3) Manatee County water mains
Conflict Structure #2: CIP manhole around the 24" PVC Force Sewer Main (City of Bradenton)

Owner / Engineer Response:

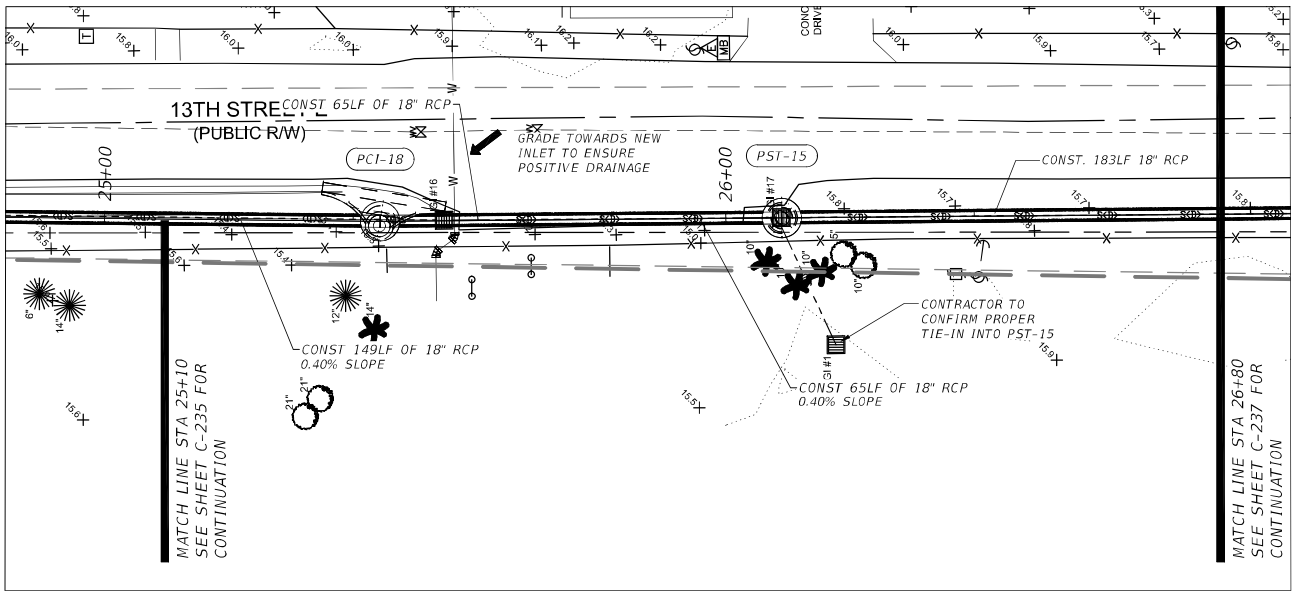

VERTICAL
SCALE 1"=5'-0"
5'
0
10'
20'
HORIZONTAL
SCALE: 1"=20'-0"

13th Street East Alignment
17+00.00–30+10.93

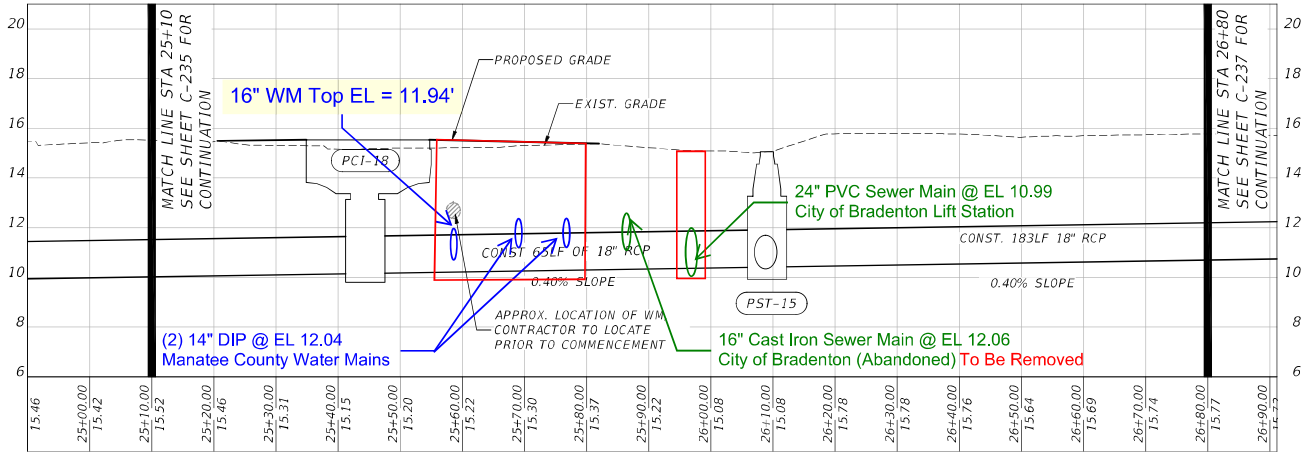

LIST OF STRUCTURES:

PCI-18
CURB INLET
RIM = 15.53'
N 18" RCP INV = 10.16'
S 18" RCP INV = 10.16'

GI#1
GRATE = 12.83'
SE 12" RCP INV = 7.75'

GI#17
RELOCATED & REPLACED W/ PST-15

GI#16
RELOCATED & REPLACED W/ PCI-18

PST-15
PRECAST MANHOLE
RIM = 15.06'
N 18" RCP INV = 10.41'
S 18" RCP INV = 10.41'

SEAL

Digitally signed by Gregory W. Corning
Date: 2024.12.03 20:04:46 -05'00'

GREG W. CORNING
FL. REG. NO. 79293

REV.	YYYY-MM-DD	DESCRIPTION	DESIGNED	PREPARED	REVIEWED	APPROVED
100%	2024-07-26	100% SUBMITTAL	T.D.	J.A.M.	T.D.	G.W.C.

CLIENT
CITY OF BRADENTON
1411-9th STREET WEST
BRADENTON, FL 34205

CONSULTANT
USA ENVIRONMENT & INFRASTRUCTURE, INC.
5845 N.W. 158th STREET
MIAMI LAKES, FL 33014
PHONE: (305) 826-5588

PROJECT
CITY OF BRADENTON
EASTSIDE DRAINAGE IMPROVEMENTS

TITLE
PLAN & PROFILE

PROJECT NO.
600621

REV. 17 of 21

C236

Path: ##

GENERAL NOTES:

1. Work with Index 425-001 and Index 425-010.

2. Use Class II Concrete.

3. Maximum opening for pipe shall be the pipe OD plus 6". Mortar used to seal the pipe into the opening will be of such mix that shrinkage will not cause leakage into or out of the structure.

4. If a conflict with a potable water supply line is discovered during construction, submit the following to Florida Department of Environmental Protection (FDEP) District Administrator For Drinking Water prior to constructing conflict structure:

   a. Plans Revision(s)
   b. Justification describing inordinate cost and practical avoidance
   c. Upon request, Utility Agency Owner (UAO) supporting documentation for cost of relocation or adjustment

Potable water supply lines passing through a drainage structure must be in compliance with Chapter 62-555.314(3) F.A.C. This Index and rule citation provide accepted methods for addressing conflicts when they cannot be reasonably avoided.

Website for District FDEP Drinking Water Contacts:
https://floridadep.gov/water/source-drinking-water/content/organization-drinking-water-program

TABLE OF CONTENTS:

Sheet	Description
1	General Notes and Contents
2	Utility Conflict Condition I and II Details

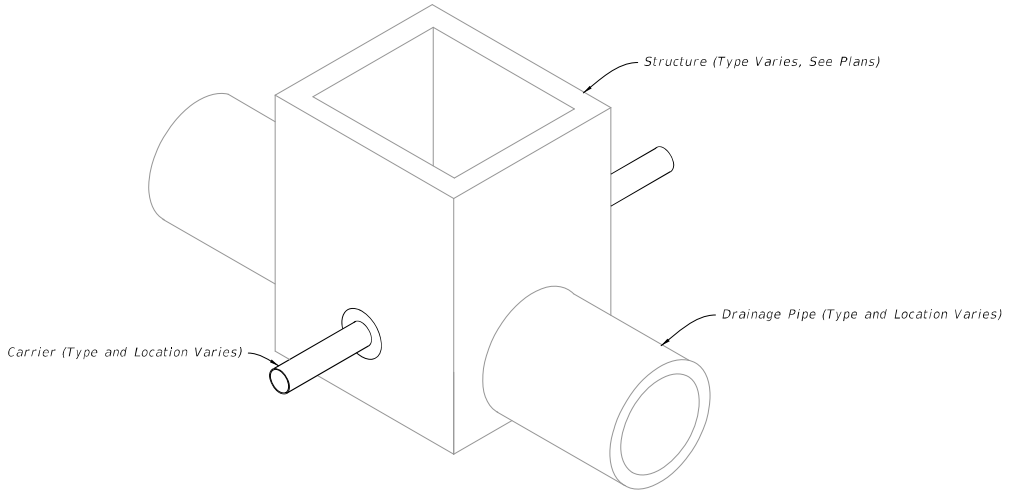

UTILITY CONFLICT
(Condition I Shown, Condition II Similar)

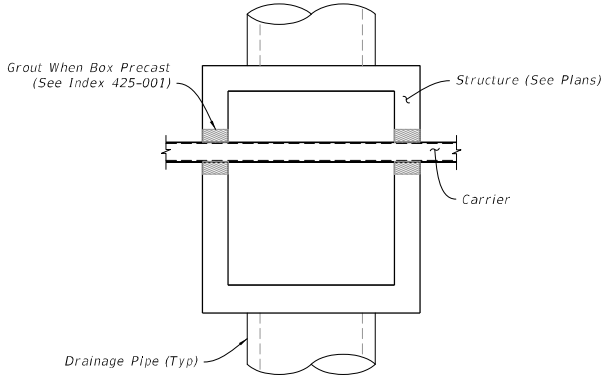

PLAN

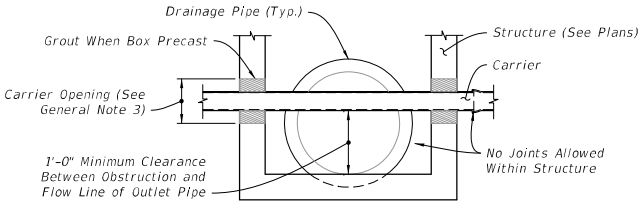

FRONT ELEVATION

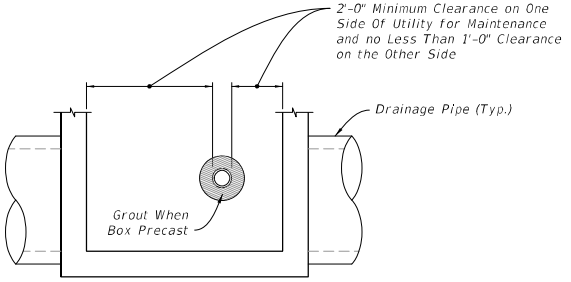

SIDE ELEVATION

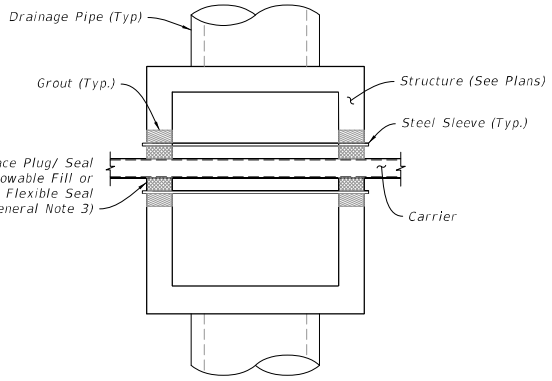

PLAN

UTILITY CONFLICT CONDITION I

(Nonpressure or Nonfluid Carrier Installations)

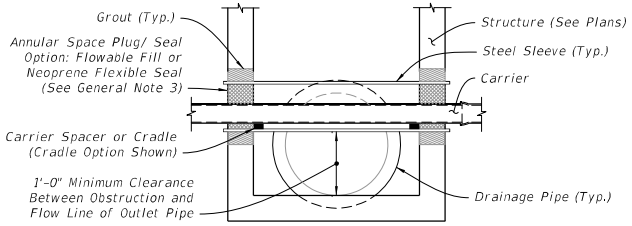

FRONT ELEVATION

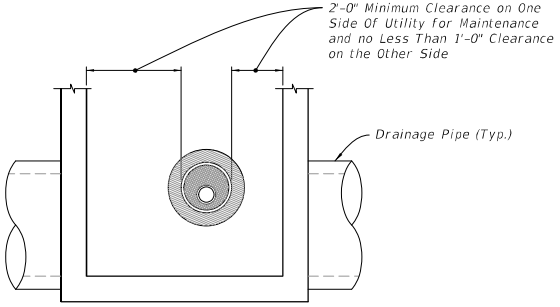

SIDE ELEVATION

UTILITY CONFLICT CONDITION II

(Pressure or Fluid Carrier Installations)

UTILITY CONFLICT CONDITION I AND II DETAILS

LAST REVISION	REVISION	DESCRIPTION:	FDOT	FY 2022-23 STANDARD PLANS	UTILITY CONFLICT THRU DRAINAGE STRUCTURES	INDEX	SHEET
11/01/20						425-080	2 of 2

9/21/2021 1:28:35 PM

FERREIRA CONSTRUCTION SOUTHERN DIVISION CO., INC.
13000 SE Flora Avenue
Hobe Sound, FL 33455
772-286-5123

CUSTOMER: City of Bradenton **DATE: 3/10/2026**

ATTENTION: Brian Norman - Public Works & Utilities **FCC JOB #: 40-4502**

PROJECT: Eastside Drainage Improvements **Cost Codes:**

LOCATION: Retention Pond

SCOPE OF EXTRA: CO-4502-009 | Manatee County Water Conflict Boxes

CHECK ONE:

- [X] Quote
- [ ] Time and Material Amount
- [ ] Backcharge

LABOR

Classification	Hours Reg.	Hours Premium	Rate Reg.	Rate Premium	Labor Cost
Foreman	144.0	0.0	$ 45.00	$ 67.49	$ 6,479.28
Laborer	144.0	0.0	$ 34.17	$ 51.25	$ 4,919.76
Laborer	144.0	0.0	$ 34.17	$ 51.25	$ 4,919.76
Laborer	45.0	0.0	$ 34.17	$ 51.25	$ 1,537.43
Operator	45.0	0.0	$ 37.31	$ 55.96	$ 1,678.73
Operator	63.0	0.0	$ 37.31	$ 55.96	$ 2,350.22
Total Hours	585.0	0.0			
				Total Direct Labor	$ 21,885.18

PAYROLL TAXES AND INSURANCE

	Rate	Cost
F.I.C.A.	7.65%	$ 1,674.22
Workman's Compensation Insurance	0.80%	$ 175.08
Florida Unemployment	4.72%	$ 1,032.98
Workman's Compensation Insurance	21.04%	$ 4,604.64
General Liability Insurance	3.50%	$ 765.98
Umbrella	2.75%	$ 601.84
	40.46%	
Total Taxes and Insurance		$ 8,854.74

LABOR FRINGE BENEFITS

Classification	Hours Reg.	Hours Premium	Rate Reg.	Rate Premium	Fringes Cost
Foreman	144.0	0.0	$ 11.10	$ 11.10	$ 1,598.40
Laborer	144.0	0.0	$ 11.10	$ 11.10	$ 1,598.40
Laborer	144.0	0.0	$ 11.10	$ 11.10	$ 1,598.40
Laborer	45.0	0.0	$ 11.10	$ 11.10	$ 499.50
Operator	45.0	0.0	$ 11.10	$ 11.10	$ 499.50
Operator	72.0	0.0	$ 11.10	$ 11.10	$ 799.20
				Total Fringe Benefits	$ 6,593.40
Total Hours	594.0	0.0			

EQUIPMENT

FCC No.	Type	Hours	Rate	Equipment Cost
	JD 85D Mini-Excavator	72.0	$ 91.40	$ 6,580.80
	930M CAT Loader	45.0	$ 123.35	$ 5,550.75
	8" Dewatering Pump & System	116.0	$ 52.50	$ 6,090.00
	Shoring Box	128.0	$ 39.68	$ 5,079.36
	Dewatering Jetting Pump	9.0	$ 25.10	$ 225.90
	Tool Truck	144.0	$ 76.00	$ 10,944.00
	Foreman Pickup Truck	144.0	$ 76.00	$ 10,944.00
	Total	658.0		
			Total Equipment Cost	$ 45,414.81

SUBCONTRACTORS

Item Description	Subcontractor	Qty.	UOM	Unit Price	Subcontractor Cost
MOT Barrels	Cornerstone Barricades	200.00	ED	$ 0.75	$ 150.00
MOT Signage	Cornerstone Barricades	200.00	ED	$ 0.65	$ 130.00
2-Man Flagger Crew	Cornerstone Barricades	144.00	MH	$ 75.00	$ 10,800.00
					$ -
				Total Subcontractor Cost	$ 11,080.00

MATERIALS

Item Description	Vendor	Qty.	UOM	Unit Price	Material Cost
#57 Stone	Allied Trucking	20.0	tn	$ 59.71	$ 1,194.20
#4 Rebar	White Cap	1,500	lbs	$ 1.49	$ 2,231.63
Formboards	White Cap	40.0	ea	$ 69.90	$ 2,795.93
Steel Sleeve & Pipe Stand	Core & Main	3.0	LS	$ 953.15	$ 2,859.45
Manhole Ring & Covers	Neenah Foundry	2.0	LS	$ 785.93	$ 1,571.85
4000 PSI Concrete	Maschmeyer	20.0	CY	$ 225.00	$ 4,500.00
Small Tools & Consumables			3% of Direct Labor		$ 1,120.00
				Total Material Cost	$ 15,078.86

MARKUP FOR OVERHEAD AND PROFIT

Overhead Markup

Direct Labor		$ 21,885.18
Labor Fringe Benefits		$ 6,593.40
Material Cost		$ 15,078.86
Equipment		$ 45,414.81
	subtotal	$ 88,972.25
	Markup Percentage	10.00%
		$ 8,897.22
Subcontractors		$ 11,080.00
	Markup Percentage	10.00%
		$ 1,108.00
	Total Overhead Markup	$ 10,005.22

Profit

Direct Labor		$ 21,885.18
Labor Fringe Benefits		$ 6,593.40
Material Cost		$ 15,078.86
Equipment		$ 45,414.81
	subtotal	$ 88,972.25
	Markup Percentage	7.50%
	Total Profit Markup	$ 6,672.92

TOTAL TIME AND MATERIALS

Direct Labor		$ 21,885.18
Payroll Taxes and Insurance		$ 8,854.74
Labor Fringe Benefits		$ 6,593.40
Material Cost		$ 15,078.86
Overhead Markup		$ 10,005.22
Profit Markup		$ 6,672.92
Equipment		$ 45,414.81
Subcontractors		$ 11,080.00
	TOTAL	**$ 125,585.13**

FERREIRA CONSTRUCTION SOUTHERN DIVISION CO., INC.
13000 SE Flora Avenue
Hobe Sound, FL 33455
772-286-5123

CUSTOMER: City of Bradenton **DATE: 3/10/2026**

ATTENTION: Brian Norman - Public Works & Utilities **FCC JOB #: 40-4502**

PROJECT: Eastside Drainage Improvements **Cost Codes:**

LOCATION: Retention Pond

SCOPE OF EXTRA: CO-4502-009 | Bradenton Sewer Conflict Boxes

CHECK ONE:

- [X] Quote
- [ ] Time and Material Amount
- [ ] Backcharge

LABOR

Classification	Hours Reg.	Hours Premium	Rate Reg.	Rate Premium	Labor Cost
Foreman	90.0	0.0	$ 45.00	$ 67.49	$ 4,049.55
Laborer	90.0	0.0	$ 34.17	$ 51.25	$ 3,074.85
Laborer	90.0	0.0	$ 34.17	$ 51.25	$ 3,074.85
Laborer	27.0	0.0	$ 34.17	$ 51.25	$ 922.46
Operator	27.0	0.0	$ 37.31	$ 55.96	$ 1,007.24
Operator	45.0	0.0	$ 37.31	$ 55.96	$ 1,678.73
Total Hours	369.0	0.0			
				Total Direct Labor	$ 13,807.68

PAYROLL TAXES AND INSURANCE

	Rate	Cost
F.I.C.A.	7.65%	$ 1,056.29
Workman's Compensation Insurance	0.80%	$ 110.46
Florida Unemployment	4.72%	$ 651.72
Workman's Compensation Insurance	21.04%	$ 2,905.14
General Liability Insurance	3.50%	$ 483.27
Umbrella	2.75%	$ 379.71
	40.46%	
Total Taxes and Insurance		$ 5,586.59

LABOR FRINGE BENEFITS

Classification	Hours Reg.	Hours Premium	Rate Reg.	Rate Premium	Fringes Cost
Foreman	90.0	0.0	$ 11.10	$ 11.10	$ 999.00
Laborer	90.0	0.0	$ 11.10	$ 11.10	$ 999.00
Laborer	90.0	0.0	$ 11.10	$ 11.10	$ 999.00
Laborer	27.0	0.0	$ 11.10	$ 11.10	$ 299.70
Operator	27.0	0.0	$ 11.10	$ 11.10	$ 299.70
Operator	45.0	0.0	$ 11.10	$ 11.10	$ 499.50
				Total Fringe Benefits	$ 4,095.90
Total Hours	369.0	0.0			

EQUIPMENT

FCC No.	Type	Hours	Rate	Equipment Cost
	JD 85D Mini-Excavator	45.0	$ 91.40	$ 4,113.00
	930M CAT Loader	27.0	$ 123.35	$ 3,330.45
	8" Dewatering Pump & System	90.0	$ 52.50	$ 4,725.00
	Shoring Box	90.0	$ 39.68	$ 3,571.43
	Dewatering Jetting Pump	9.0	$ 25.10	$ 225.90
	Tool Truck	90.0	$ 76.00	$ 6,840.00
	Foreman Pickup Truck	90.0	$ 76.00	$ 6,840.00
	Total	441.0		
			Total Equipment Cost	$ 29,645.78

SUBCONTRACTORS

Item Description	Subcontractor	Qty.	UOM	Unit Price	Subcontractor Cost
MOT Barrels	Cornerstone Barricades	100.00	ED	$ 0.75	$ 75.00
MOT Signage	Cornerstone Barricades	100.00	ED	$ 0.65	$ 65.00
2-Man Flagger Crew	Cornerstone Barricades	63.00	MH	$ 75.00	$ 4,725.00
					$ -
				Total Subcontractor Cost	$ 4,865.00

MATERIALS

Item Description	Vendor	Qty.	UOM	Unit Price	Material Cost
#57 Stone	Allied Trucking	5.0	tn	$ 59.71	$ 298.55
#4 Rebar	White Cap	500	lbs	$ 1.49	$ 743.88
Formboards	White Cap	20.0	ea	$ 69.90	$ 1,397.97
Steel Sleeve & Pipe Stand	Core & Main	1.0	LS	$ 953.15	$ 953.15
16" Iron Ductile Caps	Core & Main	2.0	ea	$ 936.26	$ 1,872.52
Manhole Ring & Covers	Neenah Foundry	1.0	LS	$ 785.93	$ 785.93
4000 PSI Concrete	Maschmeyer	10.0	CY	$ 225.00	$ 2,250.00
Small Tools & Consumables			3% of Direct Labor		$ 704.71
				Total Material Cost	$ 8,708.14

MARKUP FOR OVERHEAD AND PROFIT

Overhead Markup

Direct Labor		$ 13,807.68
Labor Fringe Benefits		$ 4,095.90
Material Cost		$ 8,708.14
Equipment		$ 29,645.78
	subtotal	$ 56,257.50
	Markup Percentage	10.00%
		$ 5,625.75
Subcontractors		$ 4,865.00
	Markup Percentage	10.00%
		$ 486.50
	Total Overhead Markup	$ 6,112.25

Profit

Direct Labor		$ 13,807.68
Labor Fringe Benefits		$ 4,095.90
Material Cost		$ 8,708.14
Equipment		$ 29,645.78
	subtotal	$ 56,257.50
	Markup Percentage	7.50%
	Total Profit Markup	$ 4,219.31

TOTAL TIME AND MATERIALS

Direct Labor		$ 13,807.68
Payroll Taxes and Insurance		$ 5,586.59
Labor Fringe Benefits		$ 4,095.90
Material Cost		$ 8,708.14
Overhead Markup		$ 6,112.25
Profit Markup		$ 4,219.31
Equipment		$ 29,645.78
Subcontractors		$ 4,865.00
	TOTAL	**$ 77,040.65**

FERREIRA

REQUEST FOR INFORMATION (RFI)	RFI #	Page #
	5	

Contract No.	Job #	Contract Name:
30358200-563000-22808	4502	City of Bradenton - Eastside Drainage Improvements

Contractor's Request for Information

Requested by:	Date Requested:	Attn:
Kyle B. Renz	05/21/2025	Brian Norman - City of Bradenton

SUBJECT	Unmarked Water Mains & Sewer Conflict on 13th St E from Tropicana Facility
SPEC SECTION	02630 Storm Drainage
DRAWINGS	C-236

Information Requested:

On drawings C-236, there is an existing water main that is called out to be located by the contractor & was also marked out before Ferreira dug it up to expose the top of the pipe. While digging to the top of the pipe, an additional water was discovered approximately 10 feet to the south from the marked water main. This additional water main is in conflict with the proposed vertical alignment of the proposed 18" RCP on 13th St E.

On 5/20/25, the City of Bradenton performed GPR scans of 13th St E and discovered the following unmarked utilities within 45 feet to the south of the previously marked water main that is shown on the construction drawings.
Two pressurized sewer mains and two additional pressurized water mains.

Contractor Recommendation:

Ferreira recommends that a "Conflict Structure" be installed within the limits of these unmarked utilities in lieu of installing the 18" RCP. The top of the Conflict Structure could be designed with a grated top to allow for maximum inflow during high volume rainstorms to allow the runoff water from the aquatic center parking lot & the Tropicana facility to flow into the new system.

May the City of Bradenton please ask for a design for this structure which will need to be cast-in-place?
Revision 1:
Please review the attached preliminary designs for Conflict Box #1 & #2.
Per City of Bradenton's directive the abandoned 16" Cast Iron sewer pipe is to be cut & capped off

Owner / Engineer Response:

The Contractor shall modify the conflict box #1 & #2, as detailed below:

Conflict Box #1 - Concrete manhole with cover, detail attached to RFI. The water line needs to stabilized with concrete support pad or adjustable pipe stand.

Conflict Box #2 - Concrete manhole with cover, detail attached to RFI. The water line needs to stabilized with concrete support pad or adjustable pipe stand.

Conflict Box #3 - Concrete manhole with cover, detail attached to RFI. The sewer line needs to stabilized with concrete support pad or adjustable pipe stand.

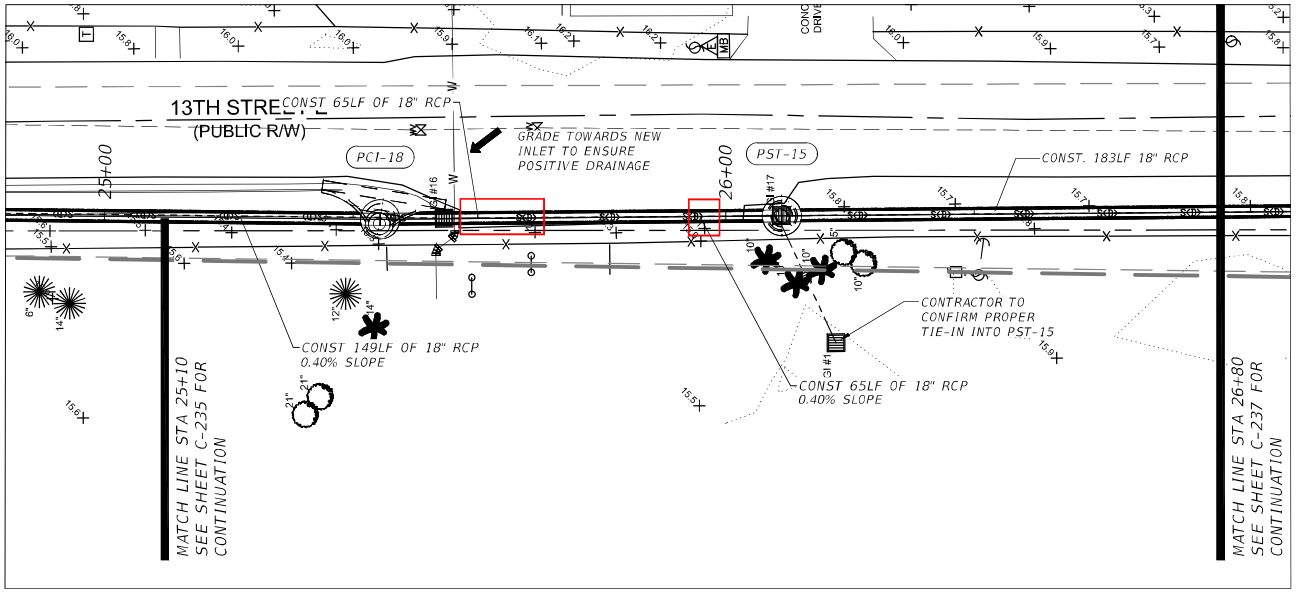

VERTICAL SCALE 1"=5'-0"
5'
0
10'
20'
HORIZONTAL SCALE: 1"=20'-0"

13th Street East Alignment
17+00.00–30+10.93

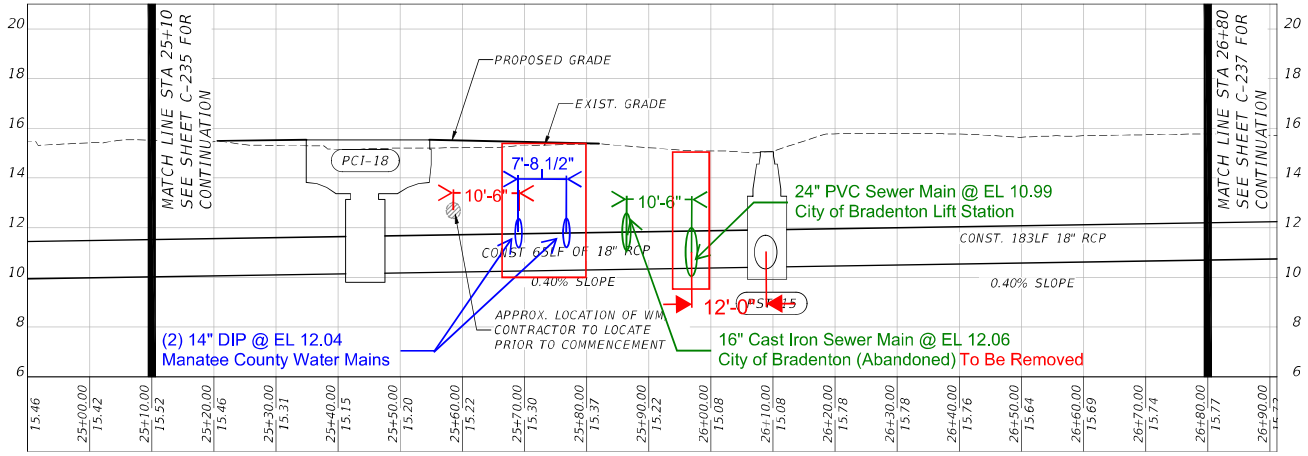

LIST OF STRUCTURES:

PCI-18
CURB INLET
RIM = 15.53'
N 18" RCP INV = 10.16'
S 18" RCP INV = 10.16'

GI#1
GRATE = 12.83'
SE 12" RCP INV = 7.75'

GI#17
RELOCATED & REPLACED W/ PST-15

GI#16
RELOCATED & REPLACED W/ PCI-18

PST-15
PRECAST MANHOLE
RIM = 15.06'
N 18" RCP INV = 10.41'
S 18" RCP INV = 10.41'

SEAL
Digitally signed by Gregory W. Corning
Date: 2024.12.03 20:04:46 -05'00'
GREG W. CORNING
FL. REG. NO. 79293

REV.	YYYY-MM-DD	DESCRIPTION	DESIGNED	PREPARED	REVIEWED	APPROVED
100%	2024-07-26	100% SUBMITTAL	T.D.	J.A.M.	T.D.	G.W.C.

CLIENT
CITY OF BRADENTON
1411-9th STREET WEST
BRADENTON, FL 34205

CONSULTANT
USA ENVIRONMENT & INFRASTRUCTURE, INC.
5845 N.W. 158th STREET
MIAMI LAKES, FL 33014
PHONE: (305) 826-5588

PROJECT
CITY OF BRADENTON
EASTSIDE DRAINAGE IMPROVEMENTS

TITLE
PLAN & PROFILE

PROJECT NO.
600621

REV. 17 of 21

C236

131

Box #1

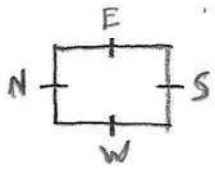

West Profile View

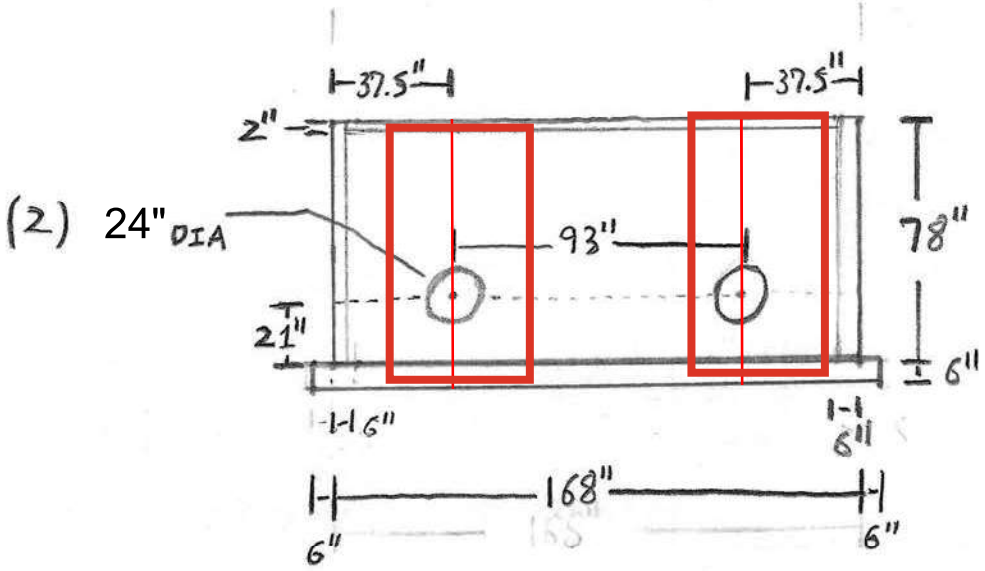

Top View

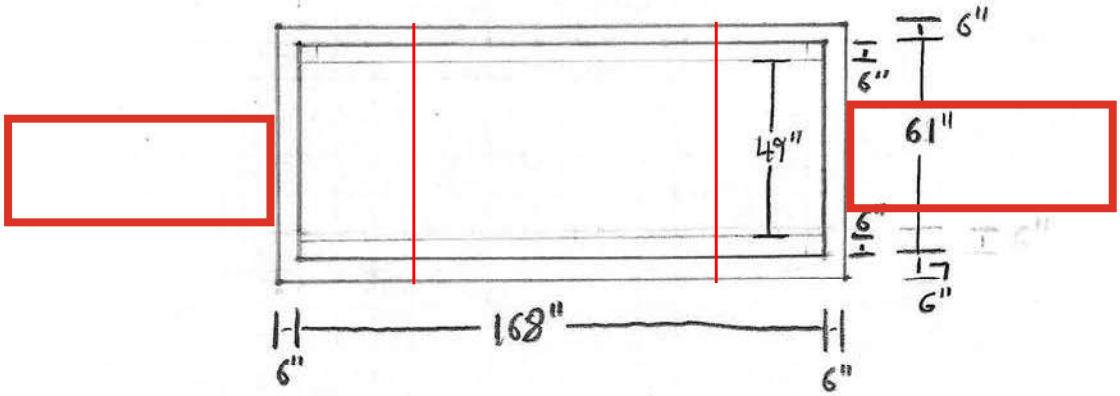

South View

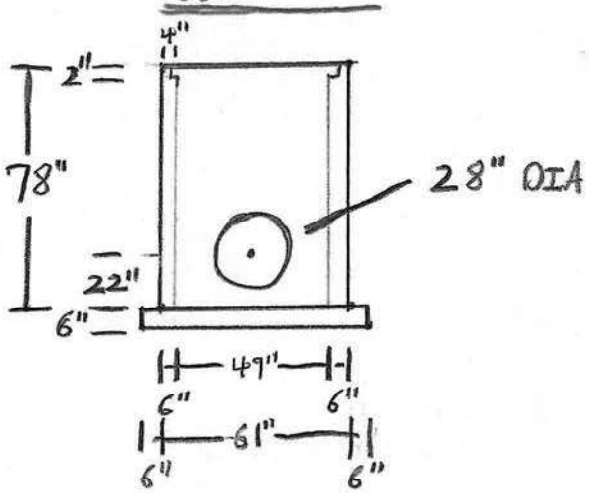

Box #2

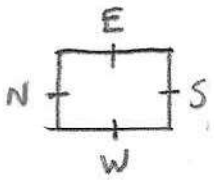

West Profile View

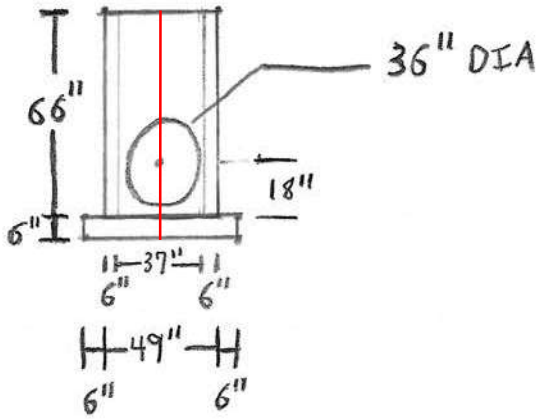

Top View

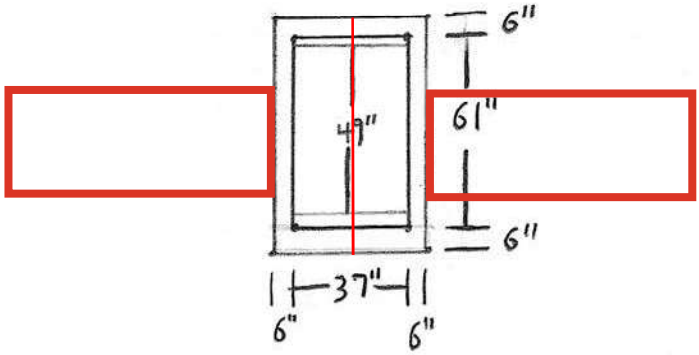

South View

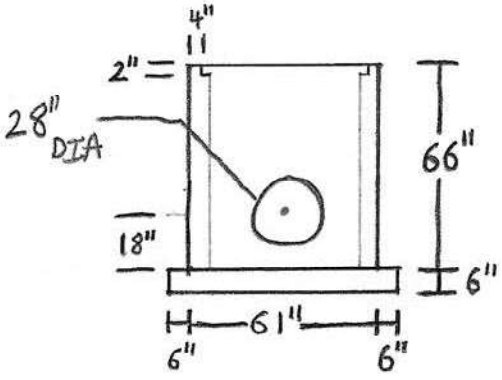

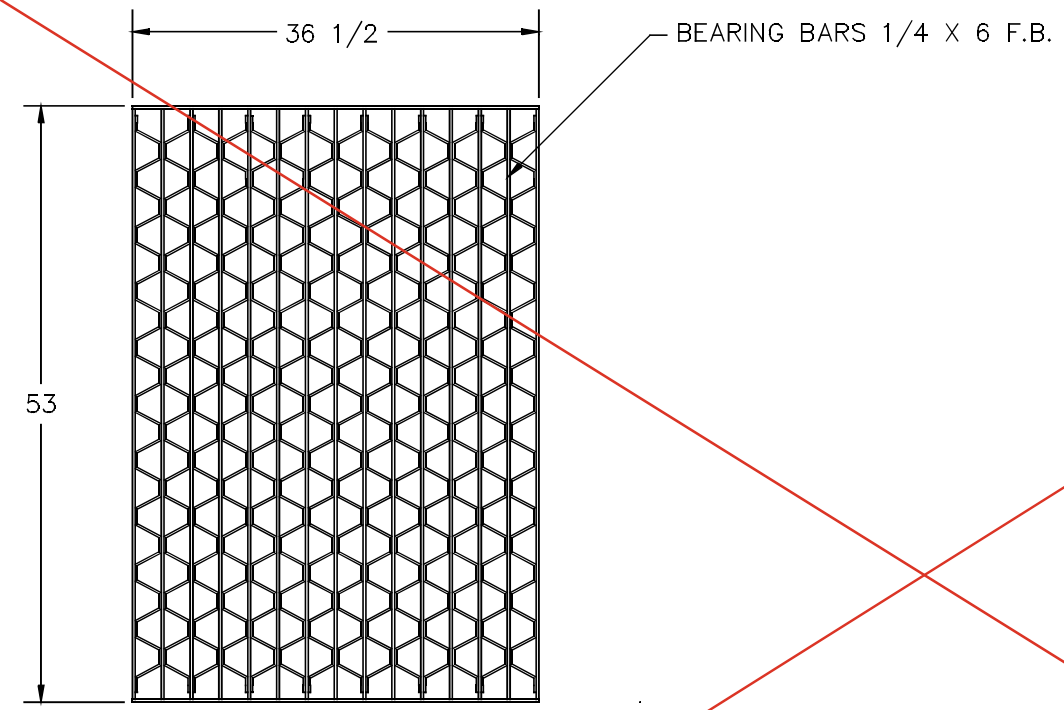

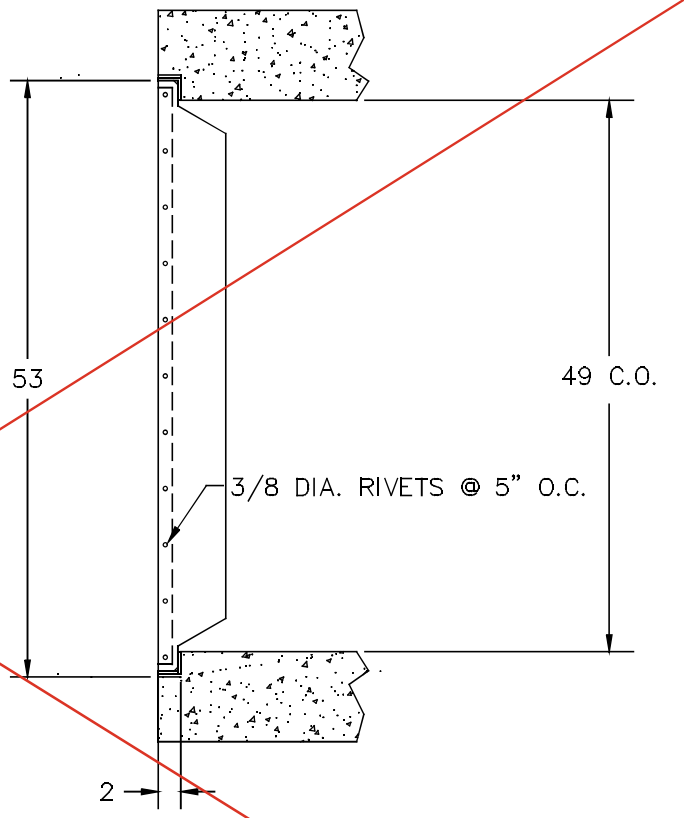

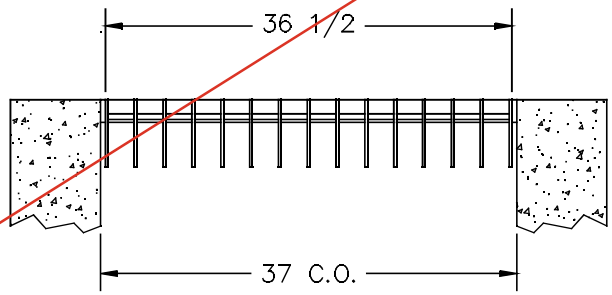

NOTES:
1– MATERIAL: STEEL, PAINTED TO F.D.O.T. SPECIFICATIONS.
2– GALVINIZED UPON REQUEST.
3– WEIGHT: 390 LBS. APP.
4– LOADING: H–20 WHEEL LOADS.
5– TYPE 'D' DITCH BOTTOM INLET.

U.S. FOUNDRY & MFG. CORP.
MEDLEY, FLORIDA

USF 6626 STEEL GRATE

DWN. BY: DAV	SCALE: 1"=12"	QUOTE#	DATE: 2/17/97
CHK. BY:	DWG. NO: 1230	SHEET	REV:

GENERAL NOTES:

1. Work with Index 425-001 and Index 425-010.

2. Use Class II Concrete.

3. Maximum opening for pipe shall be the pipe OD plus 6". Mortar used to seal the pipe into the opening will be of such mix that shrinkage will not cause leakage into or out of the structure.

4. If a conflict with a potable water supply line is discovered during construction, submit the following to Florida Department of Environmental Protection (FDEP) District Administrator For Drinking Water prior to constructing conflict structure:

   a. Plans Revision(s)
   b. Justification describing inordinate cost and practical avoidance
   c. Upon request, Utility Agency Owner (UAO) supporting documentation for cost of relocation or adjustment

Potable water supply lines passing through a drainage structure must be in compliance with Chapter 62-555.314(3) F.A.C. This Index and rule citation provide accepted methods for addressing conflicts when they cannot be reasonably avoided.

Website for District FDEP Drinking Water Contacts:
https://floridadep.gov/water/source-drinking-water/content/organization-drinking-water-program

TABLE OF CONTENTS:

Sheet	Description
1	General Notes and Contents
2	Utility Conflict Condition I and II Details

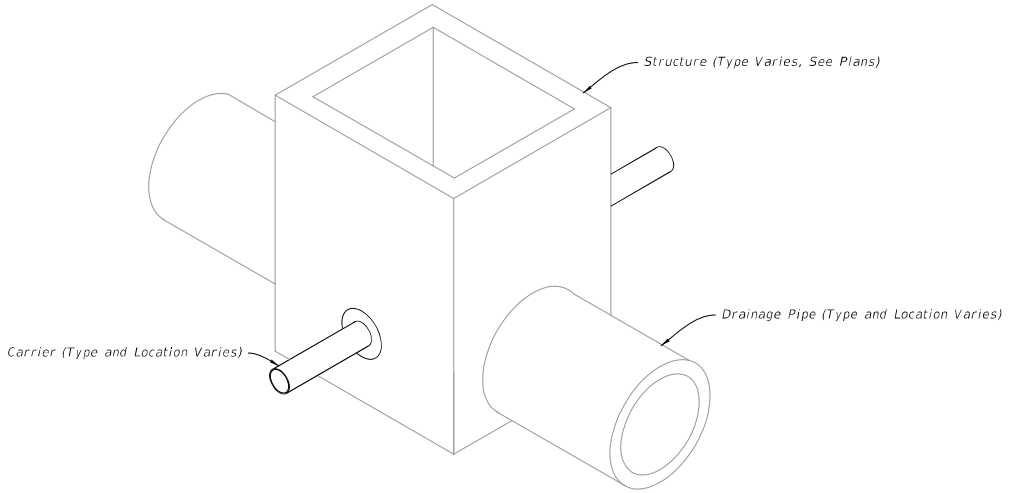

UTILITY CONFLICT
(Condition I Shown, Condition II Similar)

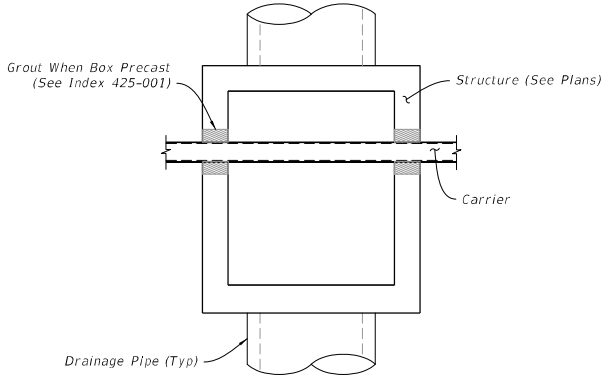

PLAN

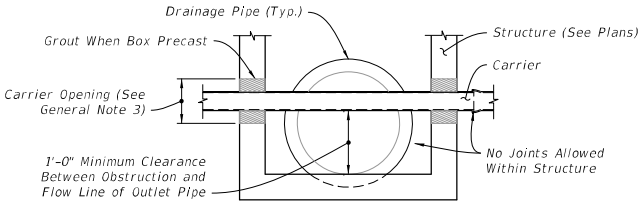

FRONT ELEVATION

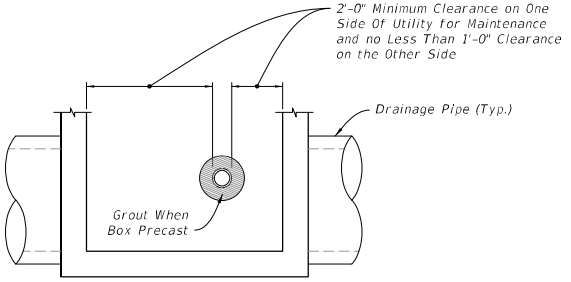

SIDE ELEVATION

UTILITY CONFLICT CONDITION I
(Nonpressure or Nonfluid Carrier Installations)

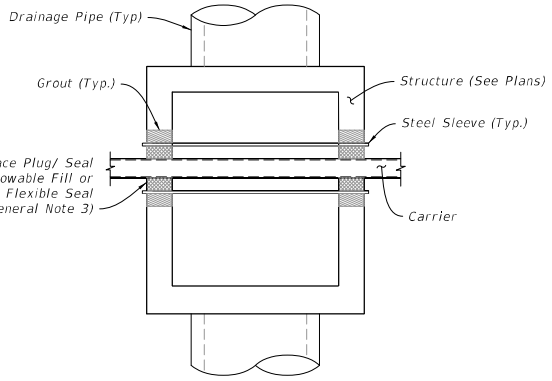

PLAN

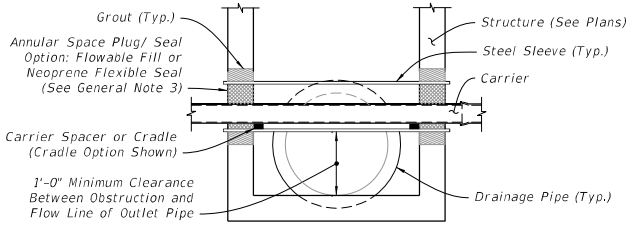

FRONT ELEVATION

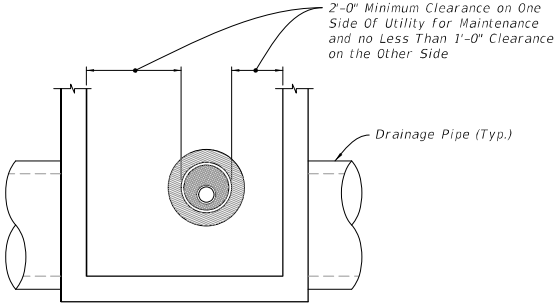

SIDE ELEVATION

UTILITY CONFLICT CONDITION II
(Pressure or Fluid Carrier Installations)

UTILITY CONFLICT CONDITION I AND II DETAILS

LAST REVISION	REVISION	DESCRIPTION:	FDOT	FY 2022-23 STANDARD PLANS	UTILITY CONFLICT THRU DRAINAGE STRUCTURES	INDEX	SHEET
11/01/20						425-080	2 of 2

9/21/2021 1:28:35 PM

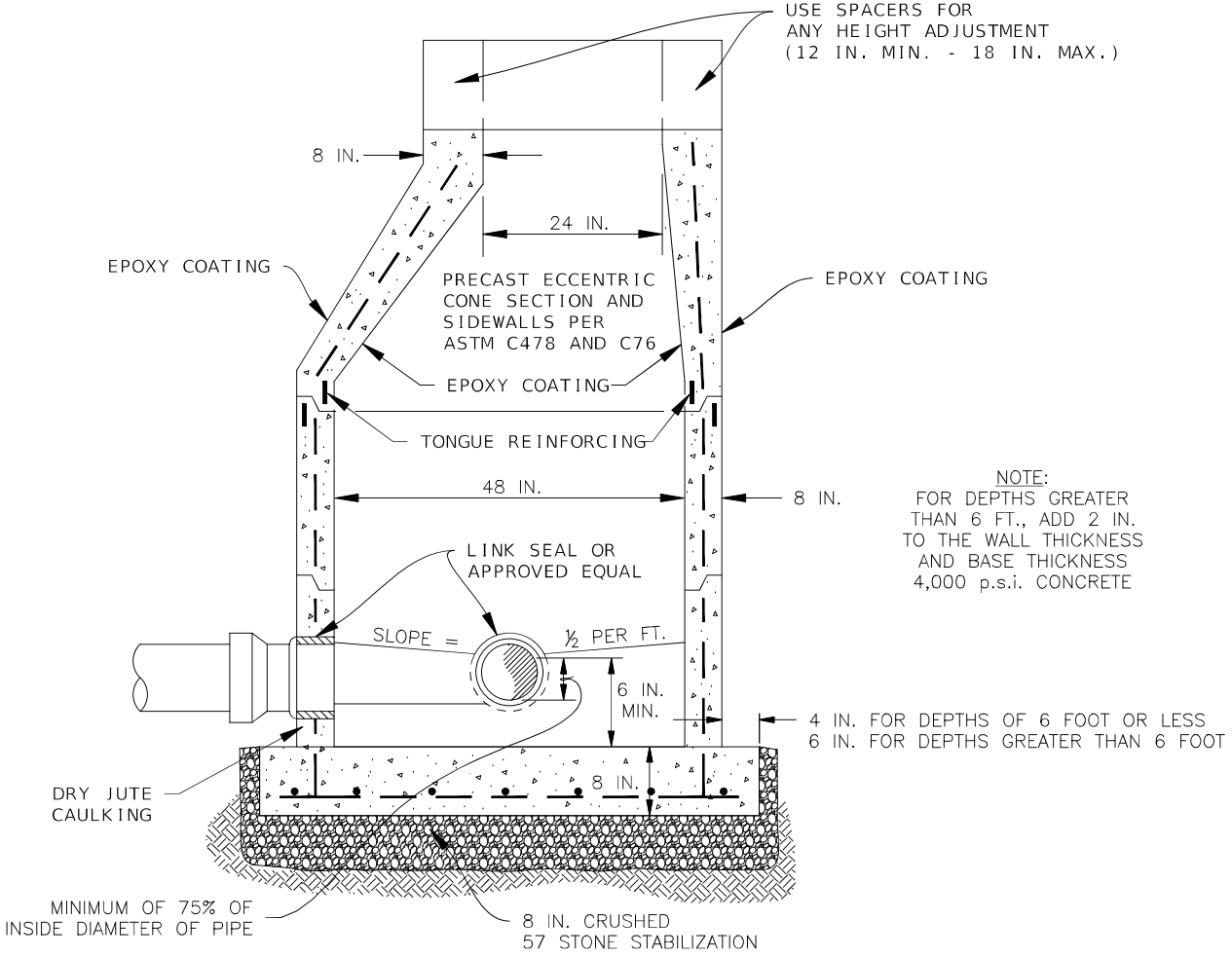

NOTE:
FOR DEPTHS GREATER THAN 6 FT., ADD 2 IN. TO THE WALL THICKNESS AND BASE THICKNESS 4,000 p.s.i. CONCRETE

REV.	DATE	DESCRIPTION	BY
2	JAN., 2017	ADDED 57 STONE	SIBE
1	7/2013	ADDED SPACER AND LINK SEAL	SIBE

CITY OF BRADENTON, FLORIDA
PUBLIC WORKS AND UTILITIES
DEPARTMENT OF ENGINEERING

SANITARY SEWER
PRECAST MANHOLE

DATE 2/07
SHEET NO. SS-1

SEAL

GREG W. CORNING
FL. REG. NO. 79293

REV.	YYYY-MM-DD	DESCRIPTION	DESIGNED	PREPARED	REVIEWED	APPROVED
100%	2024-07-26	100% FOR CONSTRUCTION	T.D.	J.A.M.	T.D.	G.W.C.

CLIENT
CITY OF BRADENTON
1411-9th STREET WEST
BRADENTON, FL 34205

CONSULTANT
USA ENVIRONMENT & INFRASTRUCTURE, INC.
5845 N.W. 158th STREET
MIAMI LAKES, FL 33014
PHONE: (305) 826-5588

PROJECT
CITY OF BRADENTON
EASTSIDE DRAINAGE IMPROVEMENTS

TITLE
DETAILS

PROJECT NO.
600621

REV. of C-310

IF THIS MEASUREMENT DOES NOT MATCH WHAT IS SHOWN, THE SHEET SIZE HAS BEEN MODIFIED FROM: ANSI B

Path: ############################# | File Name: City of Bradenton_Details.dwg | Last Edited By: jose design station Date: 2024-07-26 Time:6:09:46 PM | Printed By: Jose Design Station Date: 2024-07-27 Time:3:07:35 PM

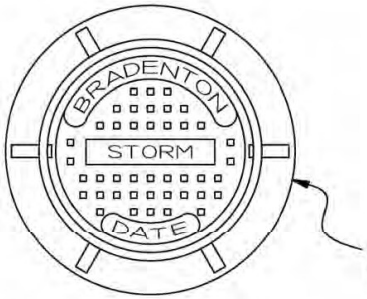

USF 420 No.32 TYPE "G"
RING AND COVER

PLAN VIEW

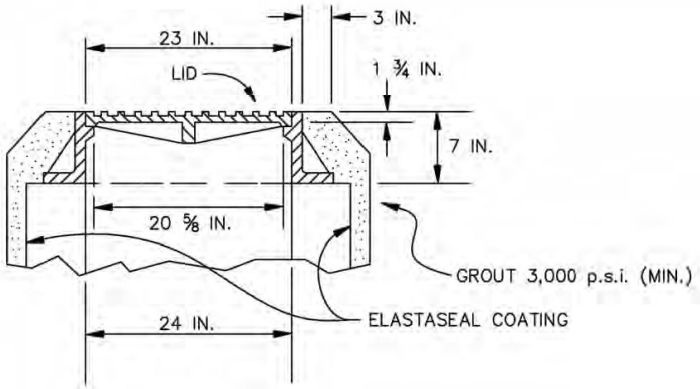

U.S.F. DRAWING No.32, TYPE "G"

SECTION VIEW

REV.	DATE	DESCRIPTION	BY

CITY OF BRADENTON, FLORIDA
PUBLIC WORKS AND UTILITIES
DEPARTMENT OF ENGINEERING

DRAINAGE
TRAFFIC BEARING
FRAME AND COVER

DATE 01/17
SHEET NO. SR-17

SEAL

GREG W. CORNING
FL. REG. NO. 79293

PROJECT
CITY OF BRADENTON
EASTSIDE DRAINAGE IMPROVEMENTS

TITLE
DETAILS

PROJECT NO.
600621

REV.

of
C-311

CLIENT
CITY OF BRADENTON
1411-9th STREET WEST
BRADENTON, FL 34205

CONSULTANT
USA ENVIRONMENT & INFRASTRUCTURE, INC.
5945 N.W. 158th STREET
MIAMI LAKES, FL 33014
PHONE: (305) 626-2588

REV.	YYYY-MM-DD	DESCRIPTION	DESIGNED	PREPARED	REVIEWED	APPROVED
100%	2024-07-26	100% FOR CONSTRUCTION	T.D.	J.A.M.	T.D.	G.W.C.

IF THIS MEASUREMENT DOES NOT MATCH WHAT IS SHOWN, THE SHEET SIZE HAS BEEN MODIFIED FROM ANSI B

Path: ##########################| File Name: City of Bradenton_Details.dwg | Last Edited By: jose.design station Date: 2024-07-26 Time: 6:09:46 PM | Printed By: Jose Design Station Date: 2024-07-27 Time: 3:07:36 PM

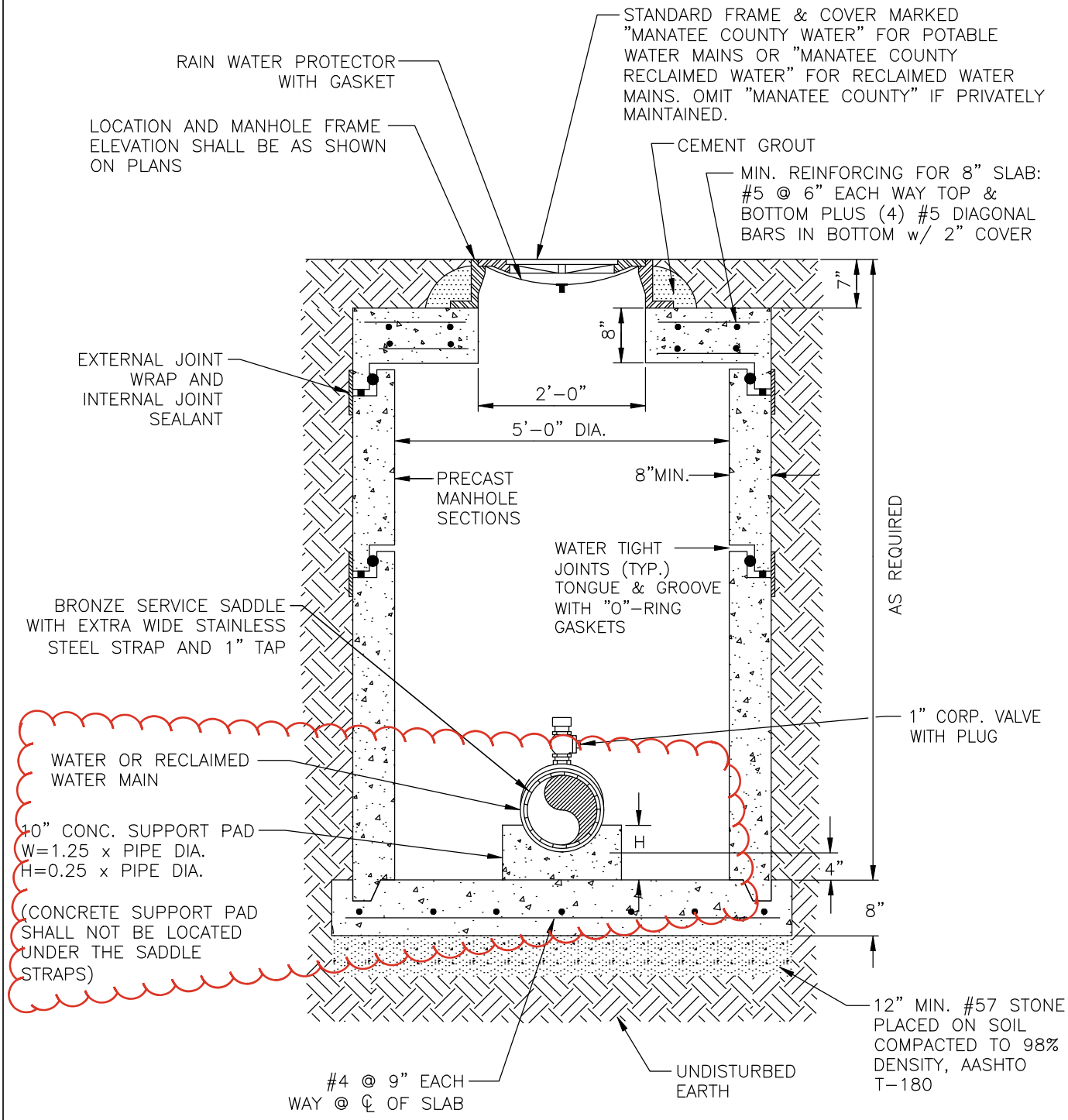

NOTES:

1. AUTOMATIC AIR RELEASE VALVES SHALL NOT BE INSTALLED BELOW GRADE.
2. SADDLE STRAPS, NUTS, BOLTS AND WASHERS TO BE 316 STAINLESS STEEL.
3. MANUALLY OPERATED AIR RELEASE VALVES ARE TO BE INSTALLED AT HIGH POINTS ALONG THE MAINS, WHERE AIR COULD BE TRAPPED.
4. ALL PIPE PENETRATING MANHOLE SHALL HAVE RESILIENT PIPE TO MANHOLE SEALS PER ASTM C-923.

MANATEE COUNTY
PUBLIC WORKS DEPARTMENT

REV.BY	DATE

SEPT 12, 2023
DATE OF APPROVAL

BELOW GRADE MANUALLY OPERATED AIR RELEASE VALVE

UW-12

FERREIRA

REQUEST FOR INFORMATION (RFI)	RFI #	Page #
	21	3

Contract No.	Job #	Contract Name:
30358200-563000-22808	4502	City of Bradenton - Eastside Drainage Improvements

Contractor's Request for Information

Requested by:	Date Requested:	Attn:
Michael Monday	04/05/2026	Brian Norman - City of Bradenton

SUBJECT	COR-4502-10--Plans C-229 C-230 PST7 To PCI 10 Re work PST 8 and Box adjustments Conflict Matrix
SPEC SECTION	
DRAWINGS	C-229 To C-231

Information Requested:

From Sta. 14+45 to Sta. 16+20 on MLK Blvd., and from Sta. 16+35 to Sta. 17+18 on 13th St. East, drainage structures PSI, PCI-10, and PST-8 were adjusted. Concrete was placed in order to relocate Box PCI-10 and provide adequate room for proper water discharge flow.A utility conflict redesign was performed on the north side of MLK Blvd. from Sta. 14+00 to Sta. 16+80 within the utility corridor matrix to evaluate possible system reconfiguration. Investigation determined that the sanitary sewer main and water main were inhibiting the proposed adjustment.Additional time and skilled labor were required to cross-trench at eight separate locations to verify the proposed design change intended to reroute the system across the street to GI #7. Field investigation determined the adjustment could not be completed due to the large quantity of existing utility conflicts and numerous unmarked utilities not identified on the plans.As a result, Boxes 7, 8, 10, and 11 required re-adjustment to achieve proper system flow discharge

Contractor Recommendation:

Boxes PSI , PCI-10 and PST -8 adjusted and Concrete in place to be adjusted for room to adquantly flow water discharge to provide adequate clearance for proper water discharge flow; A utility conflict redesign was performed on the north side of MLK Blvd. Cross-trenching was performed at eight separate locations to verify utility conflicts and confirm the proposed redesign. Field investigation determined the proposed adjustment could not be completed due to extensive utility congestion and multiple unmarked utilities not identified on the plans. As a result, Boxes 7, 8, 10, and 11 required re-adjustment to maintain proper system flow discharge. PST-8 was adjusted and relocated outside the proposed conflict line to avoid crossing MLK Blvd. to the north side. The redesign was necessary due to significant utility congestion encountered in the field, including electric, telecom, fiber optic, communication, sanitary sewer, water main, force main, and an unidentified gas line not shown on the plans. Concrete in Place adjusting PCI-10 and PCI-11- New Piping to be placed as C-900

Owner / Engineer Response:

EOR -N/A

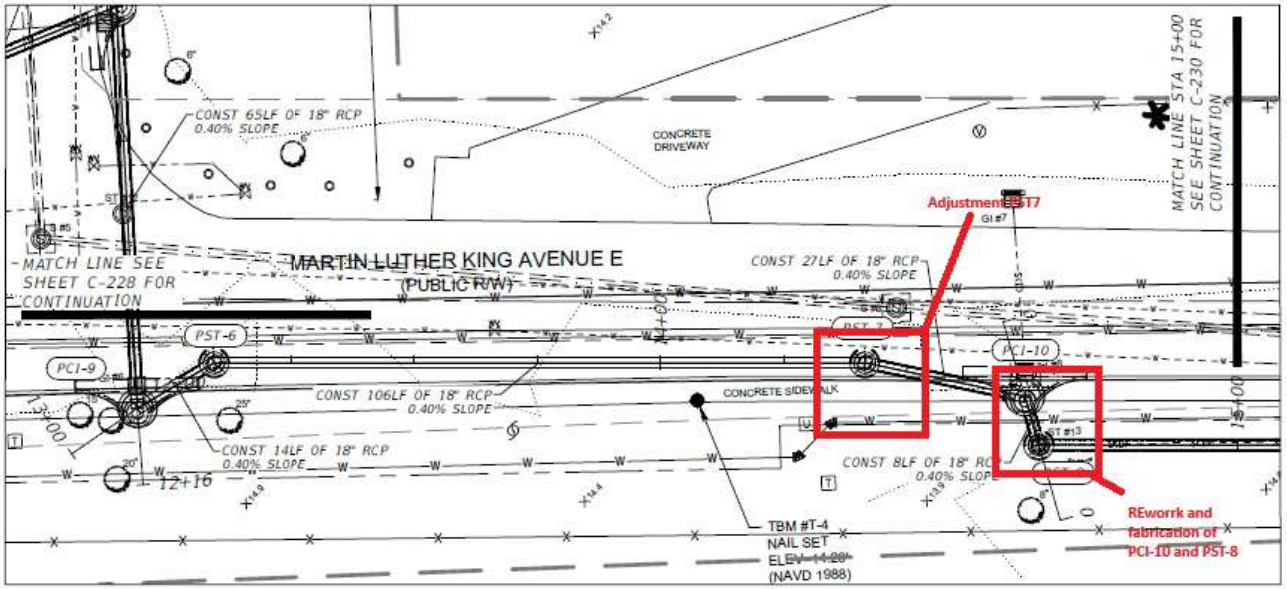

PST-8 & PCI-10 Alignment
0+00.00-0+33.50

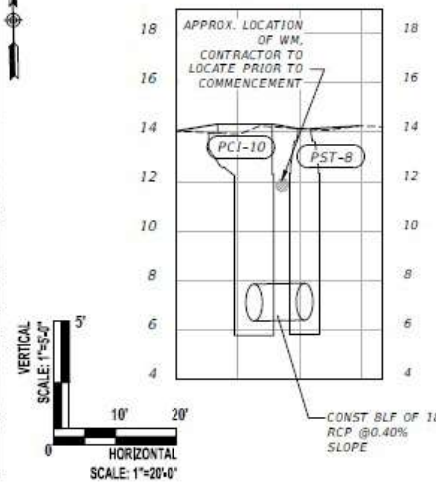

MLK Avenue E Alignment
13+00.00-16+37.84

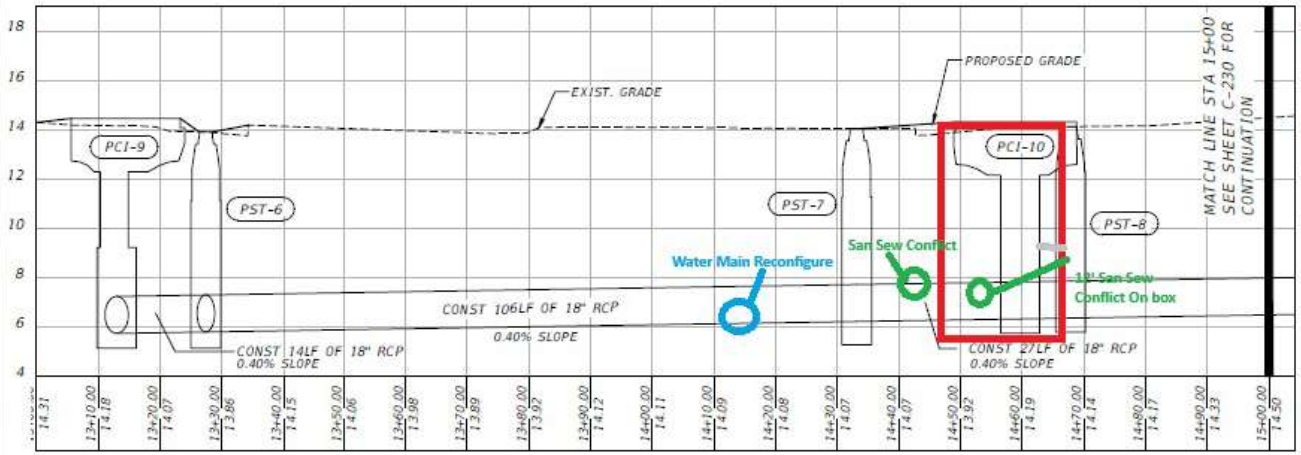

LIST OF STRUCTURES:

PCI-9
CURB INLET
RIM = 14.47'
N 18" RCP INV = 5.75'
NE 18" RCP INV =5.75'

PCI-10
CURB INLET
RIM = 14.33'
S 18" RCP INV = 6.34'
NW 18" RCP INV = 6.34'

PST-6
PRECAST MANHOLE
RIM = 13.92'
SW 18" RCP INV = 5.81'
E 18" RCP INV = 5.81'

PST-7
PRECAST MANHOLE
RIM = 14.06'
W 18" RCP INV = 5.23'
SE 18" RCP INV = 6.23'

PST-8
PRECAST MANHOLE
RIM = 14.14'
NW 18" RCP INV = 6.37'
E 18" RCP INV = 6.37'

S#5
RIM = 13.96'
N 8" PVC INV = 7.79'
E 8" PVC INV = 7.53'
W 8" PVC INV = 7.52'

S#6
RIM = 13.95'
E 12" PVC INV = 7.93'
W 12" PVC INV = 7.85'

GI#5
REMOVED & REPLACED W/ PCI-7

GI#6
REMOVED & REPLACED W/ PCI-9

GI#7
GRATE = 13.17'
S 12" RCP = X.XX'

GI#8
REMOVED & REPLACED W/ PCI-10

ST#12
REMOVED

ST#13
REMOVED & REPLACED W/ PST-8

SEAL
Digitally signed by Gregory W. Corning
Date: 2024.12.03 20:12:10 -05'00'
GREG W. CORNING
FL. REG. NO. 79293

REV	YYYY-MM-DD	DESCRIPTION	DESIGNED	PREPARED	REVIEWED	APPROVED
100%	2024-07-26	100% SUBMITTAL	T.D.	J.A.M.	T.D.	G.W.C.

CLIENT
CITY OF BRADENTON
1411-9th STREET WEST
BRADENTON, FL 34205

CONSULTANT
USA ENVIRONMENT & INFRASTRUCTURE, INC.
6845 N.W. 18th STREET
MIAMI LAKES, FL 33014
PHONE: (305) 826-5100

PROJECT
CITY OF BRADENTON
EASTSIDE DRAINAGE IMPROVEMENTS

TITLE
PLAN & PROFILE

PROJECT NO.
600621

REV.

10 of 21

C-229

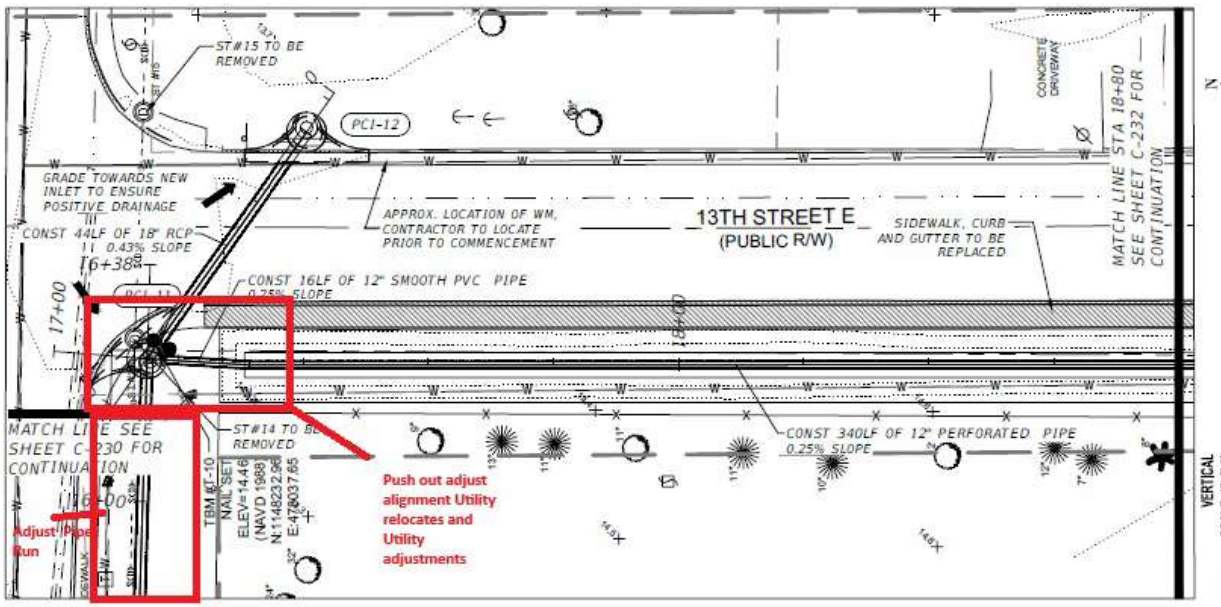

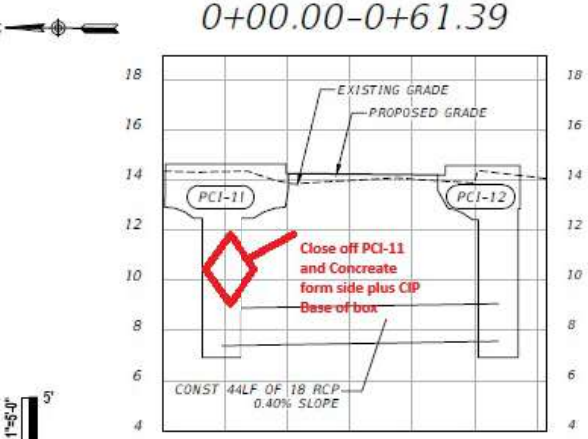

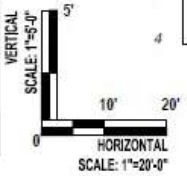

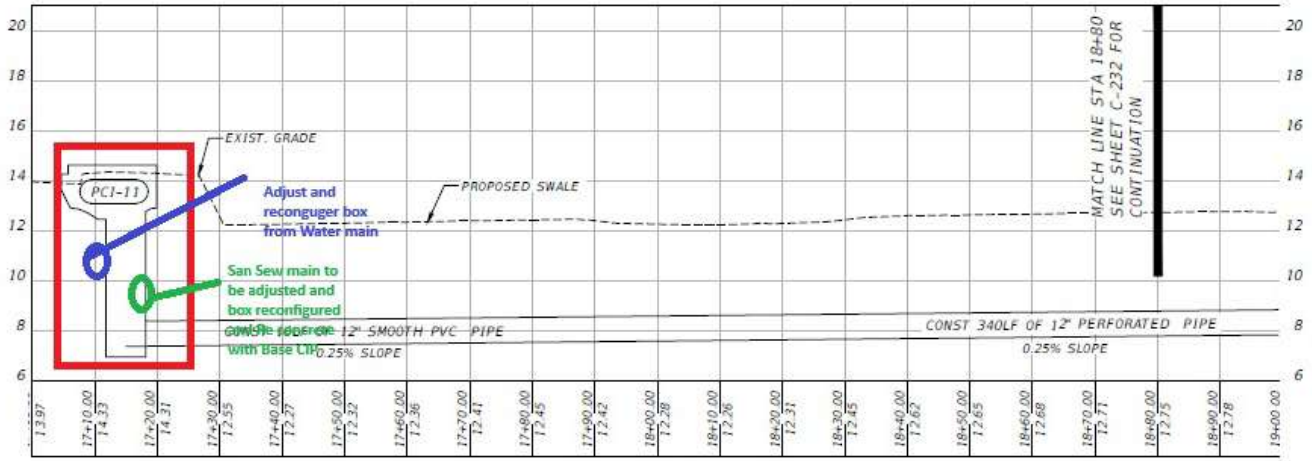

LIST OF STRUCTURES:

PCI-11
CURB INLET
RIM = 14.65'
W 18" RCP INV = 7.39'
S 12" PVC PIPE INV = 7.39'
SE 18" RCP INV = 7.39'

PCI-12
CURB INLET
RIM = 15.32'
NW 18" RCP INV = 7.57'

S#7
RIM = 13.84'
E 8" PVC INV = 8.63'
S 8" PVC INV = 8.73'
W 8" PVC INV = 8.28'

ST#14
REMOVED & REPLACED W/ PCI-11

ST#15
RELOCATED & REPLACED W/ PCI-12

BEAL

Digitally signed by Gregory W. Corning
Date: 2024.12.03 20:09:54 -05'00'

GREG W. CORNING
FL. REG. NO. 79293

REV	YYYY-MM-DD	DESCRIPTION	DESIGNED	PREPARED	REVIEWED	APPROVED
100%	2024-07-26	100% SUBMITTAL	T.D.	J.A.M.	T.D.	G.W.C.

CLIENT
CITY OF BRADENTON
1411-9th STREET WEST
BRADENTON, FL 34205

CONSULTANT
USA ENVIRONMENT & INFRASTRUCTURE, INC.
8940 N.W. 36th STREET
MIAMI LAKES, FL 33014
PHONE: (305) 826-8686

PROJECT
CITY OF BRADENTON
EASTSIDE DRAINAGE IMPROVEMENTS

TITLE
PLAN & PROFILE

PROJECT NO.
600621

REV.

12 of 21

C-231

FERREIRA CONSTRUCTION SOUTHERN DIVISION CO., INC.
13000 SE Flora Avenue
Stuart, Florida 34997
772-286-5123

CUSTOMER: City of Bradenton | **DATE: 05-18-2026**

ATTENTION: Brian Norman - Public Works & Utilities | **FCC JOB #: 40-4502**

PROJECT: Eastside Drainage Improvements | **Cost Codes:**

LOCATION:MLK Matrix

SCOPE OF EXTRA: CO-4502-002 RFI-21 | Manatee County Conflict Box Structures MLK & 13th

CHECK ONE:

X	Quote
X	Time and Material Amount
	Backcharge

LABOR

Classification	Hours Reg.	Hours Premium	Rate Reg.	Rate Premium	Labor Cost
Foreman	169.0	0.0	$ 45.00	$ 67.50	$ 7,605.00
Laborer	169.0	0.0	$ 34.17	$ 51.26	$ 5,774.73
Laborer	169.0	0.0	$ 34.17	$ 51.26	$ 5,774.73
Laborer	155.0	0.0	$ 34.17	$ 51.26	$ 5,296.35
Laborer	0.0	0.0		$ -	$ -
Operator	140.0	0.0	$ 45.00	$ 67.50	$ 6,300.00
Operator	30.0	0.0	$ 45.00	$ 67.50	$ 1,350.00
OPerator	0.0	0.0		$ -	$ -
Welder	0.0	0.0		$ -	$ -
Welder	0.0	0.0		$ -	$ -
Welder	0.0	0.0		$ -	$ -
Total Hours	832.0	0.0			
			Total Direct Labor		$ 32,100.81

PAYROLL TAXES AND INSURANCE

	Rate	Cost
F.I.C.A.	7.65%	$ 2,455.71
Workman's Compensation Insurance	0.80%	$ 256.81
Florida Unemployment	4.72%	$ 1,515.16
Workman's Compensation Insurance	21.04%	$ 6,754.01
General Liability Insurance	3.50%	$ 1,123.53
Umbrella	2.75%	$ 882.77
	40.46%	
	Total Taxes and Insurance	$ 12,987.99

LABOR FRINGE BENEFITS

Classification	Hours Reg.	Hours Premium	Rate Reg.	Rate Premium	Fringes Cost
Foreman	169.0	0.0	$ 10.58	$ 10.58	$ 1,788.02
Laborer	169.0	0.0	$ 10.58	$ 10.58	$ 1,788.02
Laborer	169.0	0.0	$ 10.58	$ 10.58	$ 1,788.02
Laborer	155.0	0.0	$ 10.58	$ 10.58	$ 1,639.90
Laborer	0.0	0.0	$ 10.58	$ 10.58	$ -
Operator	140.0	0.0	$ 10.58	$ 10.58	$ 1,481.20
Operator	30.0	0.0	$ 10.58	$ 10.58	$ 317.40
Operator	0.0	0.0	$ 10.58	$ 10.58	$ -
Welder	0.0	0.0	$ 10.58	$ 10.58	$ -
Welder	0.0	0.0	$ 10.58	$ 10.58	$ -
Welder	0.0	0.0	$ 10.58	$ 10.58	$ -
			Total Fringe Benefits		$ 8,802.56
Total Hours	832.0	0.0			

EQUIPMENT

No.	Type	Hours	Rate	Equipment Cost
	Komatsu 138 Excavator	26.0	$ 75.05	$ 1,951.30
	JD 85D Mini-Excavator	85.0	$ 92.40	$ 7,854.00
	Komatsu 490 Excavator	41.5	$ 221.05	$ 9,173.58
	Shoring Box	89.0	$ 39.90	$ 3,551.10
	JD744K Vacmaster Vac Truck	74.3	$ 110.97	$ 8,239.52
	C263 Skid Steer	45.8	$ 33.12	$ 1,515.24
	Cat 860 Loader	45.0	$ 163.50	$ 7,357.50
	Water Truck	29.5	$ 64.75	$ 1,910.13
	Water Truck	35.3	$ 163.50	$ 5,763.38
	MIDI Drill	0.0	$ 140.00	$ -
	4 inch Pump	144.3	$ 18.71	$ 2,698.92
	Genie S-45 Manlift (NEFF)	0.0	$ 11.23	$ -
	Generator	0.0	$ 9.75	$ -
	Tool Truck	110.0	$ 35.81	$ 3,939.10
	Crew Pickup Truck	88.0	$ 11.00	$ 968.00
	Crew Pickup Truck	88.0	$ 11.00	$ 968.00
	Total	901.5		
			Total Equipment Cost	$ 55,889.76

SUBCONTRACTORS

MOT Barrels	Cornerstone Barricad	169.0	$0.75		$ 126.75
			Total Subcontractor Cost		$ -

MATERIALS

#57 Stone	Allied Trucking	20 TN	$59.71		$1,194.20
Formboards	White Cap	67	$69.90		$4,683.30
4000 PSI Concrete	Mashchmeyer	20CY	$225.00		$4,500.00

Type	Vendor	Date	Invoice #	Qty.	UOM	Unit Price	Material Cost
Small Tools & Consumables				3% of Direct Labor			$ 1,616.74
				Total Material Cost			$ 1,616.74

MARKUP FOR OVERHEAD AND PROFIT

Overhead Markup

Direct Labor		$ 32,100.81
Labor Fringe Benefits		$ 8,802.56
Material Cost		$ 1,616.74
Equipment		$ 55,889.76
	subtotal	$ 98,409.87
Markup Percentage		15.00%
		$ 14,761.48
Subcontractors		$ -
Markup Percentage		5.00%
		$ -
Total Overhead Markup		$ 14,761.48

Profit

Direct Labor		$ 32,100.81
Labor Fringe Benefits		$ 8,802.56
Material Cost		$ 1,616.74
Equipment		$ 55,889.76
	subtotal	$ 98,409.87
Markup Percentage		10.00%
Total Profit Markup		$ 9,840.99

TOTAL TIME AND MATERIALS

Direct Labor		$ 32,100.81
Payroll Taxes and Insurance		$ 12,987.99
Labor Fringe Benefits		$ 8,802.56
Material Cost		$ 1,616.74
Overhead Markup		$ 14,761.48
Profit Markup		$ 9,840.99
Equipment		$ 55,889.76
Subcontractors		$ -
	TOTAL	**$ 136,000.33**

AGENDA ITEM NO. 6.k

Item Cover Page

CITY COUNCIL MEETING AGENDA ITEM REPORT

DATE: May 27, 2026

SUBMITTED BY: Heather Lutz-Silver, Public Works & Utilities

ITEM TYPE: Miscellaneous

AGENDA SECTION: CONSENT AGENDA

SUBJECT: GT Bray Park EMS Station TECO Easement

SUGGESTED ACTION: Approval

Is this item Quasi-Judicial?
No

Does this item require a public hearing?
No

EXPLANATION:
A ten-foot (10') wide natural gas utility easement is provided to the Peoples Gas System, Inc, lying five (5) feet on each side of the following described centerline, being within the G.T. Bray Park parcel in Section 5, Township 35 South, Range 17 East, City of Bradenton, Manatee County Florida. The purpose of the easement is to allow for placing, constructing, operating, maintaining, repairing, replacing on and removing underground gas line and aboveground and underground necessary appurtenances thereto, including without limitation telecommunications equipment, risers, and pipeline markers.

FINANCIAL IMPACT:
N/A

ATTORNEY REVIEW/RECOMMENDATION:
Reviewed by City Attorney Scott Rudacille.

SUGGESTED MOTION:
Motion to approve the GT Bray Park EMS Station TECO Easement with the Peoples Gas System, Inc.

ATTACHMENTS:

GT Bray Park EMS Station TECO Easement

SEC. 05 TWP. 35S. RGE. 17E.
FOLIO/PARCEL ID NO.: 5110410007
PROJECT NO.: D0012063

PREPARED BY
AND RETURN TO:

Isabel M. Morales
Real Estate Department
Peoples Gas System, Inc.
P.O. Box 2562
Tampa, FL 33601

EASEMENT

KNOW ALL MEN BY THESE PRESENTS, that **CITY OF BRADENTON** a Florida municipal corporation, whose address is 101 Old Main Street West, Bradenton, FL 34205 ("Grantor"), in consideration of One Dollar and other valuable considerations paid to Grantor by **PEOPLES GAS SYSTEM**, **INC**., a Florida corporation, P.O. Box 2562, Tampa, Florida 33601 ("Company"), receipt whereof is hereby acknowledged, has given and granted unto the Company, its successors and assigns, a perpetual easement over and the right to enter upon the land in Manatee County, Florida, described as follows:

See Exhibit "A" attached hereto and by reference made a part hereof ("Easement Parcel")

together with the right of ingress and egress to and from the same, and all rights therein and all privileges thereon which are or may be necessary or convenient for the full use and enjoyment of such easement, which is for the purposes of placing, constructing, operating, maintaining, repairing, replacing on and removing from said land, installations described as follows:

Underground gas line and aboveground and underground necessary appurtenances thereto, including without limitation telecommunications equipment, risers, and pipeline markers ("Facilities").

The aforesaid rights and privileges granted shall include the right and privilege to root prune or remove any and all deep rooted vegetation upon said Easement Parcel and upon the Grantor's lands adjacent to said land, wherever the Company may deem it necessary or desirable to do so for the protection of said installations.

Company shall promptly repair any damage to the Easement Parcel, or any other property not owned by Company, caused by Company exercising its rights under this agreement, including ground cover, planting, roadways, driveways, sidewalks, and parking areas.

Grantor reserves the right to install minor landscaping, irrigation and/or fencing within the Easement Parcel provided that it does not and will not directly interfere with the Company's Facilities, does not change grade, and does not cause water impoundment. Grantor further acknowledges that under the "Underground Facility Damage Prevention and Safety Act" (ch. 556 Fla. Stat.), that Grantor is obligated to notify "Sunshine State One-Call of Florida, Inc." of its intent to engage in excavation or demolition prior to commencing any work and that this notification system shall provide member operations an opportunity to identify and locate, if applicable, their underground Facilities prior to said excavation or demolition. In the event Grantor fails to notify as set forth above, Grantor may be held responsible for costs and expenses incurred due to damage of Company's Facilities.

The Company agrees, at the sole expense of Grantor, to relocate its Facilities, over, under and upon Easement Parcel upon the request of Grantor, and the vacated portion of this easement being released and conveyed back to Grantor and the site of the relocated Facilities being conveyed and included in this easement grant as though it had been included ab initio.

Company, at its option and in its sole discretion, may remove those underground portions of the Facilities that should be removed and purge and cap any portions of abandoned Facilities to be left in place.

The terms "Grantor" and "Company" herein employed shall be construed to include the words "heirs, executors, administrators and assigns" and "successors and assigns" of the respective parties hereto, wherever the context so admits or requires. This Grant of Easement constitutes the entire agreement and understanding between the parties with respect to the subject matter hereof. This Grant of Easement may not be changed, altered or modified except by an instrument in writing signed by the party against whom enforcement of such change would be sought. This Grant of Easement shall be binding upon the parties hereto and their respective successors and assigns.

Grantor warrants to Company that it is duly formed, validly existing and in good standing under the laws of its state of formation, and Grantor has all requisite right, power, and authority to enter into this Easement, Grantor owns the Easement Parcel, and no consent of any other person is required to render this Easement a valid and binding instrument.

IN WITNESS WHEREOF, the Grantor has executed this Grant of Easement this _____ day of _____, 20__.

Signed, Sealed and Delivered
in the presence of:

GRANTOR:

CITY OF BRADENTON,
a Florida municipal corporation,

WITNESS: _____
Print Name: _____
Address: _____

By: _____
Print Name: _____
Title: _____
Adress: _____

WITNESS: _____
Print Name: _____
Address: _____

STATE OF _____ (CORPORATE SEAL)
COUNTY OF _____

The forgoing instrument was acknowledged before me this _____ day of _____ 20__ by _____as_____ of **CITY OF BRADENTON**, on behalf of the corporation by means of □ physical presence or □ online notarization. She/He personally appeared before me, is personally known to me or has produced _____ as identification and who did (did not) take an oath.

(SEAL)

_____
Notary Public

_____
Print Name
Commission Expires:

EXHIBIT "A" (Sheet 1 of 2)
(Legal description and sketch)

EXHIBIT "A"
UTILITY EASEMENT DESCRIPTION
(THIS IS NOT A SURVEY)

Description:

A ten-foot (10') wide natural gas utility easement, lying five (5) feet on each side of the following described centerline, being within the G.T. Bray Park parcel, in Section 5, Township 35 South, Range 17 East, City of Bradenton, Manatee County Florida.

Commence at the Southwest corner of the Northeast 1/4 of Section 5, Township 35 South, Range 17 East; thence S 89°36'16" E, a distance of 72.00 feet to the easterly right-of-way of 59th Street West as described in Official Records Book 776, Page 775, of the Public Records of Manatee County, Florida; thence along the said easterly right-of-way the following three (3) courses: (1) N 00°37'32" E, a distance of 870.06 feet to the beginning of a curve concave to the Southwest, having a radius of 11517.9941 feet; (2) thence northwesterly a distance of 443.586 feet along the arc of said curve through a central angle of 2°12'23.76" to the beginning of a reverse curve concave to the Northeast, having a radius of 11407.9941 feet; (3) thence northwesterly a distance of 42.15 feet along the arc of said curve through a central angle of 0°12'42.12" to the **POINT OF BEGINNING**; thence S 89°51'18" E, departing said right-of-way, a distance of 338.00 feet; thence N 00°08'42" E, a distance of 93.00 feet; S 89°51'18" E, a distance of 24.00 feet, more or less to the base of westerly wall of the Manatee County Emergency Medical Services Station at the building foundation and the **POINT OF TERMINUS**. Containing 930 square feet, more or less.

The sidelines of said easement shall be extended or shortened, as necessary, to intersect at the points of intersection (PIs) of the centerline and to intersect with the adjoining right-of-way line.

Surveyor's Notes:

1) This is a description/sketch and **NOT** a boundary survey.
2) This description/sketch is **NOT** complete without Sheet 2 of 2.
3) Bearings are based on the West line of Northeast 1/4 of Section 5, Township 35 South, Range 17 East, being N0° 37' 51"E, referenced to the State Plane Coordinate System, Florida West Zone, North American Datum of 1983 (NAD83), Adjustment of 2011(epoch 2010.00).
4) Distances are in U.S. Survey Feet and expressed in feet and decimal parts thereof.
5) Subject to easements, dedications and restrictions of record. No title commitment was provided to this Surveyor.
6) This description/sketch meets the requirements of Chapter 5J-17, Florida Administrative Code, as it pertains to descriptions/sketch to accompany description.
7) Any additions or deletions to this description/sketch by others than the signing party without written consent of the signing party is prohibited.
8) Not valid without the original signature and seal of a Florida Licensed Surveyor and Mapper.

CITY OF BRADENTON
PUBLIC WORKS & UTILITIES
SURVEY & MAPPING
bradenton
The Friendly City
888 13th AVENUE EAST
BRADENTON, FLORIDA 34208
(941) 708-6300

Digitally signed by David E Cronkhite, PSM
Date: 2026.05.19 05:03:38 -04'00'

05/19/2026

DAVID E. CRONKHITE, PSM — DATE
FLORIDA CERTIFICATE NO. 6078

DAVID E. CRONKHITE CERTIFICATE No. 6078 STATE OF FLORIDA REGISTERED SURVEYOR & MAPPER

SCALE: 1" = 60'

SHEET: 1 OF 2
SECTION 5
TOWNSHIP 35 SOUTH
RANGE 17 EAST
DRAW BY: DEC
DRAWING DATE: 05/19/2026

EXHIBIT "A" (Sheet 2 of 2)
(Legal description and sketch)

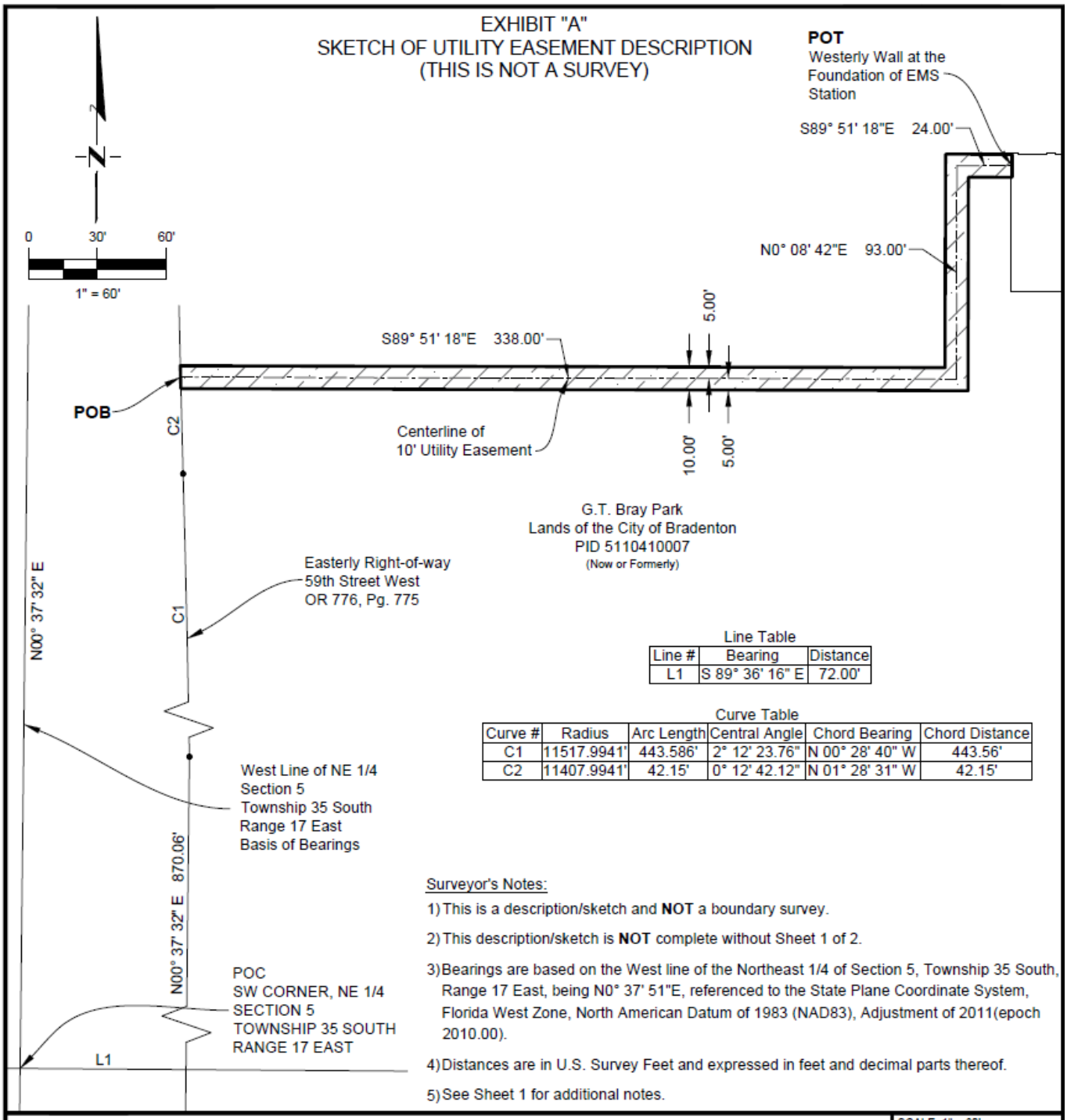

Line Table

Line #	Bearing	Distance
L1	S 89° 36' 16" E	72.00'

Curve Table

Curve #	Radius	Arc Length	Central Angle	Chord Bearing	Chord Distance
C1	11517.9941'	443.586'	2° 12' 23.76"	N 00° 28' 40" W	443.56'
C2	11407.9941'	42.15'	0° 12' 42.12"	N 01° 28' 31" W	42.15'

Surveyor's Notes:

1) This is a description/sketch and **NOT** a boundary survey.
2) This description/sketch is **NOT** complete without Sheet 1 of 2.
3) Bearings are based on the West line of the Northeast 1/4 of Section 5, Township 35 South, Range 17 East, being N0° 37' 51"E, referenced to the State Plane Coordinate System, Florida West Zone, North American Datum of 1983 (NAD83), Adjustment of 2011(epoch 2010.00).
4) Distances are in U.S. Survey Feet and expressed in feet and decimal parts thereof.
5) See Sheet 1 for additional notes.

CITY OF BRADENTON
PUBLIC WORKS & UTILITIES
SURVEY & MAPPING
bradenton
The Friendly City
888 13th AVENUE EAST
BRADENTON, FLORIDA 34208
(941) 708-6300

POB	=POINT OF BEGINNING
POT	=POINT OF TERMINUS
POC	=POINT OF COMMENCEMENT
INST	=INSTRUMENT NUMBER
OR	=OFFICIAL RECORDS BOOK
PG	=PAGE
PID	=PARCEL IDENTIFICATION
OA	=OVERALL
NW	=NORTHWEST
NE	=NORTHEAST
SW	=SOUTHWEST
SE	=SOUTHEAST
L#	=LINE NUMBER
C#	=CURVE NUMBER
#	=NUMBER

SCALE: 1" = 60'
SHEET: 2 OF 2
SECTION 5
TOWNSHIP 35 SOUTH
RANGE 17 EAST
DRAW BY: DEC
DRAWING DATE: 05/19/2026

AGENDA ITEM NO. 6.I

Item Cover Page

CITY COUNCIL MEETING AGENDA ITEM REPORT

DATE: May 27, 2026

SUBMITTED BY: David Lindsey, Public Works & Utilities

ITEM TYPE: Agreement

AGENDA SECTION: CONSENT AGENDA

SUBJECT: Interlocal Agreement (ILA) with Manatee County for Installation, Maintenance, and Use of an Alternative Potable Water Supply Line for Blake Hospital

SUGGESTED ACTION: Approval

Is this item Quasi-Judicial?
No

Does this item require a public hearing?
No

EXPLANATION:

During Hurricanes Helene and Milton, the City's potable water reservoir was compromised by storm surge, resulting in impaired water quality and service interruptions to HCA Florida Blake Hospital. Because hospitals require a reliable potable water supply during emergencies, Manatee County provided a temporary above-ground alternative water line and now intends to relocate the line underground to create a permanent alternative connection.

The proposed ILA establishes the City's and County's rights and responsibilities for the design, construction, operation, maintenance, and use of the Alternative Water Line. Under the Agreement, Manatee County will design, permit, construct, own, operate, maintain, repair, and replace the line at the County's sole expense. The line may be used to provide potable water to the Hospital during periods when the City's primary water system is unable, or reasonably anticipated to be unable, to provide the required flow or water quality.

The Agreement also grants the County limited access to City rights-of-way and City property as needed for the line, subject to City standards, permitting requirements, and coordination with the City. Activation and deactivation of the line will be coordinated among the City, County, and Hospital during periods of disruption and upon restoration of the City's primary water system.

FINANCIAL IMPACT:
There is no direct financial impact to the City for the design, permitting, installation, construction, operation, maintenance, repair, or replacement of the Alternative Water Line, as these responsibilities are assigned to Manatee County at the County's sole expense. The County will own the Alternative Water Line and may directly bill the Hospital for potable water usage provided through the line during periods of disruption, based on County-owned metering equipment and the County's adopted water utility rate schedule.

ATTORNEY REVIEW/RECOMMENDATION:
Reviewed and approved by City Attorney Rudacille.

SUGGESTED MOTION:
Motion to approve the ILA with Manatee County regarding the installation, maintenance, and use of an alternative potable water supply line for HCA Florida Blake Hospital, and authorize the Mayor to execute the Agreement and any related documents necessary to effectuate the Agreement.

ATTACHMENTS:
ILA with Manatee County

INTERLOCAL AGREEMENT

between

MANATEE COUNTY, FLORIDA

and

CITY OF BRADENTON, FLORIDA

regarding

INSTALLATION, MAINTENANCE, AND USE OF AN ALTERNATIVE POTABLE WATER SUPPLY LINE FOR BLAKE HOSPITAL

This Interlocal Agreement ("**Agreement**") is made and entered into by **Manatee County**, a political subdivision of the State of Florida (the "**County**"), and the **City of Bradenton**, a municipal corporation created and existing under the laws of the State of Florida (the **"City"**); individually, "Party"; collectively, "Parties".

RECITALS

WHEREAS, the Florida Interlocal Cooperation Act of 1969, § 163.01, Florida Statutes (the **"Act"**), authorizes local government units to make the most efficient use of their powers by cooperating to provide services and facilities that best address the geographic, economic, population, and other factors influencing the needs of local communities; and

WHEREAS, the Act permits the Parties to enter into a contract in the form of an interlocal agreement to exercise the powers, privileges, and authority which they share in common and which each might exercise separately; and

WHEREAS, during Hurricane Helene and Hurricane Milton, the City's potable water reservoir was compromised by storm surge, resulting in impaired water quality and service interruptions to HCA Health Services of Florida, Inc., d/b/a HCA Florida Blake Hospital, located at 2020 59th Street West, Bradenton, Florida 34209 (the "**Hospital**"); and

WHEREAS, maintaining a reliable, clean, and continuous water supply to hospitals during emergencies is essential to protecting public health, safety, and welfare; and

WHEREAS, in response to the disruption, Manatee County provided an above-ground temporary alternative potable water line, from the existing terminus of the four-inch (4") potable water line on 21st Avenue West to the Hospital's water supply line, and now intends to relocate this line underground to establish a permanent connection to the Hospital via the Alternative Water Line (as defined herein); and

WHEREAS, the Parties recognize the importance of ensuring that the Hospital has access to an alternative potable water source to maintain service continuity and protect public health and safety during natural disasters or other emergency events that compromise the City's primary water system ("**Periods of Disruption**"); and

WHEREAS, the County agrees to design, permit, construct, and maintain the Alternative Water Line and, upon completion, to supply potable water to the Alternative Water Line subject to the terms of this Agreement; and

WHEREAS, the Parties desire to cooperate in the design, construction, operation, maintenance and use of the Alternative Water Line under the terms and conditions set forth in this Agreement; and

WHEREAS, the Parties find that it is in the public interest to enter into this Agreement and wish to enter into this Agreement to establish their respective rights and responsibilities regarding the Alternative Water Line; and

NOW, THEREFORE, in consideration of the mutual covenants and conditions contained herein, the sufficiency of which is hereby acknowledged, County and City agree as follows:

ARTICLE 1
AUTHORITY

1.1 Recitals. The above recitals are true and correct and are incorporated herein by reference.

1.2 This Agreement is entered into pursuant to the powers and authority granted to the Parties hereto under the Constitution and laws of the State of Florida, including expressly (but, not limited to) Sections 1 and 2 of Article VIII of the Constitution of the State of Florida, Chapters 125 and 166 of Florida Statutes, Part I of Chapter 163 of Florida Statutes, and Section 163.01 of Florida Statutes, and The Manatee County Utility Bond Act, Article XI Manatee County Code of Ordinances.

ARTICLE 2
DEFINITIONS

2.1 "Alternative Water Line" means the water line and all associated appurtenances, facilities, and equipment extending from the proposed 8"x6" tee located approximately 846 feet east of 59th Street West on 21st Avenue West to the Hospital's water supply line Point of Connection (defined below), including all portions located within the jurisdictional boundaries and rights-of-way of both Manatee County and the City of Bradenton, as conceptually depicted in **Exhibit "A"**, attached hereto and incorporated herein by reference. The Alternative Water Line may be used to provide potable water to the Hospital during Periods of Disruption in accordance with the terms of this Agreement.

2.2 "Point of Connection" shall mean the physical connection point of the Alternative Water Line to the Hospital system, located at the gate valve installed on the Alternative Water Line immediately upstream of the tee connection to the City of Bradenton water system, as generally depicted on **Exhibit "B"**. The Point of Connection shall be the downstream face of said gate valve. All utility infrastructure upstream of and including the gate valve shall be owned and maintained by the County. All utility infrastructure

downstream of the Point of Connection shall be owned and maintained by the City and/or the Hospital, as applicable.

2.3 "Emergency Operations" means actions undertaken during Periods of Disruption to ensure the Hospital's access to potable water when the City's primary water system is, or is reasonably anticipated to be, unable to provide the flow or quality of water required by the Hospital.

ARTICLE 3
AGREED TERMS OF USE

3.1 County's Rights and Responsibilities.

A. General. The County agrees to design, permit, install, construct, and maintain the Alternative Water Line in accordance with the County's established practices and standards and at the County's sole expense.

B. Ownership and Control**.** The County shall own the Alternative Water Line in its entirety, including all portions located within both the County's and the City's jurisdictional boundaries and rights-of-way.

C. Operation and Maintenance. The County shall be solely responsible for the operation, maintenance, repair, and replacement of the Alternative Water Line, including the auto flusher, and any metering devices.

D. Use During Disruptions. The County shall have the right to provide potable water to the Hospital through the Alternative Water Line during Periods of Disruption, consistent with the terms of this Agreement.

E. Billing Authority. The County shall have the right to measure and bill the Hospital directly for any potable water usage provided through the Alternative Water Line at rates consistent with the then-current County's adopted water utility rate schedule, and in accordance with applicable County billing practices and

procedures. All billing shall be based on flow measured through County-owned metering equipment associated with the Alternative Water Line.

3.2 City's Rights and Responsibilities.

A. Hospital Coordination. The County, City, and Hospital shall coordinate on determining if the alternative water line connection should be activated.

B. Right of Entry and Access. The City hereby grants the County a non-exclusive right to enter upon and access City-owned rights-of-way and other City property, as reasonably necessary, for the installation, operation, inspection, maintenance, repair, replacement, and emergency restoration of the Alternative Water Line, subject to compliance with applicable City standards, permitting requirements, and reasonable coordination with the City. The County shall restore any disturbed City rights-of-way to a condition equal to or better than that existing prior to the County's activities.

3.3 Activation and Deactivation.

A. Activation and deactivation of the Alternative Water Line shall be coordinated between the City and the County during Periods of Disruption and upon restoration of the City's primary water system.

ARTICLE 4
TERM AND TERMINATION

4.1 Effective Date. This Agreement shall become effective once it has been filed with the Manatee County Clerk of Court as required by the Act.

4.2 Term and Termination. This Agreement shall remain in full force and effect from the Effective Date unless terminated by:

A. mutual written consent of both Parties; or

B. either Party, with or without cause, upon one hundred eighty (180) days' written notice to the other Party.

ARTICLE 5
AMENDMENTS; ENFORCEMENT

5.1 Amendments Generally. This Agreement may be amended, and its material provisions may be waived, only by written instrument expressly approved for the County by its Board of County Commissioners, for the City by its City Council, and only if properly executed by all the parties hereto.

5.2 Enforcement. The parties to this Agreement shall have all legal and equitable remedies provided by Florida law for enforcement hereof.

5.3 Waiver. The failure or neglect by any party to enforce any right under this Agreement shall not be deemed to be a waiver of that party's rights. A waiver shall not be effective unless it is in writing and signed by the party who possesses the right to waive enforcement of same.

ARTICLE 6
MISCELLANEOUS PROVISIONS

6.1 Entire Agreement. This Agreement constitutes the entire Agreement between the parties hereto and supersedes any and all prior understandings or correspondence. Any subsequent conditions, representations, warranties or agreements, shall not be valid and binding upon the parties unless they are in writing and signed by both parties. There are no oral or other written promises, conditions, representations, understandings, or terms of any kind as conditions or inducements to the execution hereof, and none have been relied upon by either Party relating to this Agreement. It is further agreed that no modification, amendment or alteration in the terms or conditions contained herein shall be effective unless contained in a written document executed pursuant to the requirements of Articles 5.1 and 6.13 herein.

6.2 Execution of Counterparts. This Agreement may be executed in any number of counterparts. Each counterpart shall be deemed an original instrument, and all counterparts collectively shall be a single agreement.

6.3 Validity. After consultation with their respective legal counsel, the County and the City each represent and warrant to the other its respective authority and power under Florida law to enter into this Agreement, acknowledge the validity and enforceability of this Agreement, and waive any future right of defense based on claim of illegality, invalidity or unenforceability of any nature. The City and the County each hereby represent, warrant and covenant to and with the other (i) that this Agreement has been validly approved by its respective governing body at a duly held public meeting, and (ii) that this Agreement constitutes a legal, valid and binding contract enforceable against the respective parties in accordance with the terms hereof (assuming the due authorization, execution and delivery hereof by the other party hereto).

6.4 No General Obligation. Notwithstanding any other provisions of this Agreement, the obligations undertaken by the Parties hereto shall not be construed to be or constitute general obligations, debts or liabilities of the City, the County, the State of Florida, or any political subdivision thereof within the meaning of the Constitution and laws of the State of Florida, but shall be payable solely in the manner and to the extent provided in or contemplated by this Agreement. The obligations of the County hereunder are subject to annual appropriation of legally available non ad valorem funds by the County's Board of County Commissioners, and shall not constitute or create a pledge, lending of credit, or lien, either legal or equitable, of or on any of the County's ad valorem revenues or funds, or upon any other revenues or funds of the County, as may be construed under the laws or the Constitution of the State of Florida. No Party to this Agreement, nor any other person or entity, shall ever have the right to compel any exercise of the ad valorem taxing power of any party to this Agreement to make the payments herein provided, nor shall this Agreement

constitute a charge, lien or encumbrance, either legal or equitable, upon any property (except as contemplated for the placement, use, and maintenance of the Alternative Water Line) or funds of the City or the County. Notwithstanding anything contained herein, the County reserves the right, in its sole discretion, to pay the costs contemplated in this Agreement from any funds legally available for such purpose.

6.5 Indemnification. To the extent permitted by law, and without waiving sovereign immunity, each Party agrees to be fully responsible for its acts of negligence, or its employees' acts of negligence when acting within the scope of their employment and agrees to be liable for any damages resulting from said negligence. The indemnification provisions of this Agreement shall survive termination of this Agreement for any claims that may be filed after the termination date of the Agreement provided the claims are based upon actions that occurred during the performance of this Agreement. Nothing herein is intended to serve as a waiver of sovereign immunity by any Party to which sovereign immunity may be applicable or an extension of its liability beyond the limits established in Section 768.28, Florida Statutes, nor should anything in this Agreement be constructed as consent by either Party to be sued by third parties in any manner arising out of this Agreement, and each Party claims all of the privileges and immunities and other benefits and protections afforded by Section 163.01(9), Florida Statutes. Notwithstanding anything contained herein to the contrary, if any provision of this Agreement or its incorporated exhibits obligates the County to indemnify the City, County's obligation to indemnify the City shall only be to the extent permitted by law and subject to the applicable limitations set forth in Section 768.28, Florida Statues and from legally available funds. Each Party shall be responsible for damages arising from its facilities located upstream or downstream of the Interconnect, respectively, except to the extent caused by the negligence of the other Party.

6.6 Force Majeure. No Party shall be liable for any failure to perform, or delay in the performance of, any obligation under this Agreement if such failure is caused

directly by hurricane, tornado, fire, earthquake, civil commotion or failure or disruption of utility services, or other like cause beyond the reasonable control of the party obliged to perform.

6.7 Ambiguities; Construction. All Parties have been allowed equal input regarding the terms and wording of this Agreement and have had the benefit of consultation with legal counsel prior to its execution, such that all language herein shall be construed equally against the parties, and no language shall be construed strictly against its drafter. All pronouns and any variations thereof shall be deemed to refer to the masculine, feminine and neuter, singular or plural, as the identities of the party or parties, personal representatives, subcontractors, successors or assigns may require.

6.8 Headings. The headings or captions of sections or paragraphs used in this Agreement are for convenience of reference only and are not intended to define or limit their contents, nor are they to affect the construction of or to be taken into consideration in interpreting this Agreement.

6.9 Severability. In the event any term or provision of the Agreement shall be held invalid, such invalid term or provision shall not affect the validity of any other term or provision hereof; and all such other terms and provisions hereto shall be enforceable to the fullest extent permitted by law as if such invalid term or provision had never been part of this Agreement; provided, however, if any term or provision of this Agreement is held to be invalid due to the scope or extent thereof, such term or provision shall be automatically deemed modified in order that it may be enforced to the maximum scope and extent permitted by law.

6.10 Governing Law; Venue. This Agreement shall be governed by and construed in accordance with laws of the State of Florida, and venue for any action arising out of or related to this Agreement shall be in the Circuit Court for the Twelfth Judicial Circuit in Manatee County, Florida and United States District Court, the Middle District of Florida, Tampa Division.

6.11 Dispute Resolution. In the event of a dispute between the Parties under this Agreement, the County Administrator and City Administrator, or their respective designated representatives, shall review such dispute and options for resolution. The decisions of the County Administrator and City Administrator or their designees regarding the dispute shall be final. In the event the County Administrator and City Administrator or their designees are unable to resolve a dispute, the Parties will refer the matter to mediation. This process shall substitute for the dispute resolution process set forth in Chapter 164 Florida Statutes.

6.12 Waiver of Jury Trial. The Parties hereby waive all rights to trial by jury for any litigation concerning this Agreement.

6.13 Full Agreement; Filing with Clerk of Circuit Court. This Agreement contains the entire agreement of the parties with respect to the matters addressed herein. Previous agreements and understandings of the parties, including without limitation the Agreement in principle, with respect to such matters are null and void and of no effect. As required by the Act, this Agreement and all amendments thereto shall be filed with the Clerk to the Circuit Court for Manatee County. Whichever Party is last to approve this Agreement shall be responsible for filing the Agreement with the Clerk of the Circuit Court for Manatee County and incurring any fees associated therewith.

6.14 Notices. All notices, elections, requests and other communications hereunder shall be in writing and shall be deemed given in the following circumstances: when personally delivered; or three (3) business days after being deposited in the United States Mail, postage prepaid, certified or registered; or the next business day after being deposited with a recognized overnight mail or courier delivery service; and addressed as follows (or to such other person or at such other address, of which any party hereto shall give written notice as provided herein):

If to County: Manatee County Administrator
Manatee County Administration Center
1112 Manatee Avenue, Suite 920
Bradenton, Florida 34206

With copies to: Manatee County Attorney's Office
1112 Manatee Avenue West, Suite 969
Bradenton, Florida 34205
Attention: County Attorney

If to City: Director – Public Works & Utilities
City of Bradenton
888 13th Avenue East
Bradenton, Florida 34208
Telephone: (941) 708-6300

With copies to: City of Bradenton Attorney
Scott Rudacille, Esq.
Blalock Walters, P.A.
802 11th Street West
Bradenton, Florida 34205
Telephone: (941) 748-0100

In all cases, notices shall be deemed delivered to a party only upon delivery of copies to the persons indicated above in the same manner as for the party being notified.

[SIGNATURES ON FOLLOWING PAGE]

WHEREFORE, the Parties have executed this Agreement, by and through their fully authorized representatives, on the respective dates below.

MANATEE COUNTY, a political subdivision of the State of Florida

By: its Board of County Commissioners

By: _____
Chairperson

Date: _____

ATTEST: ANGELINA COLONNESO

CLERK OF THE CIRCUIT COURT AND COMPTROLLER

By: _____
Deputy Clerk

CITY OF BRADENTON, a municipal corporation created and existing under the laws of the State of Florida

By: _____
Mayor

Attest: _____
City Clerk

Date: _____

APPROVED AS TO LEGAL
FORM AND SUFFICIENCY

_____
Scott Rudacille, Esq.
City Attorney

Date: _____

EXHIBIT "A"

Alternative Water Line

EXHIBIT "A"
ALTERNATIVE WATER LINE

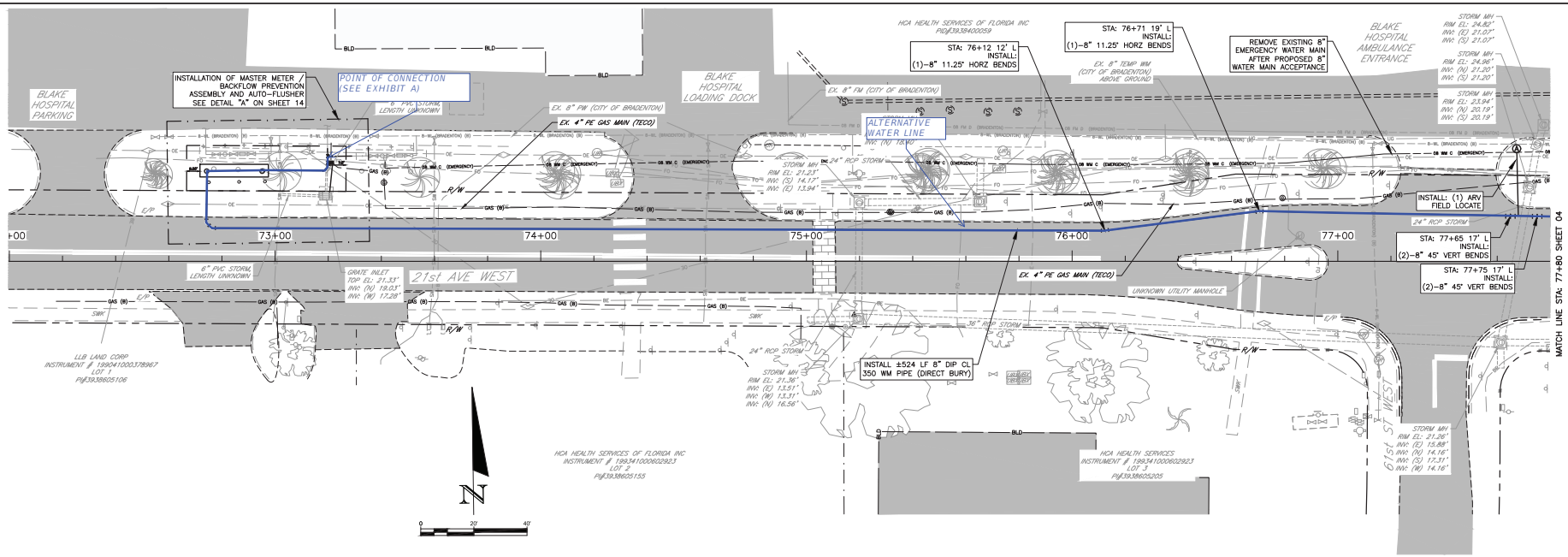

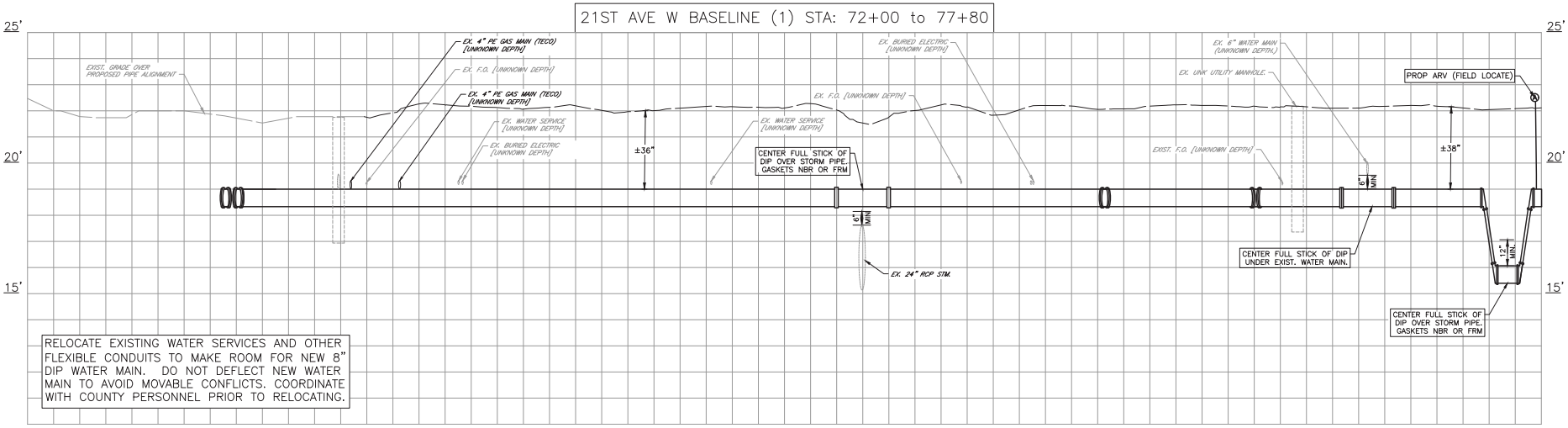

REVISIONS	
DATE	DESCRIPTION

Manatee County FLORIDA
1022 26th Avenue East, Bradenton, FL 34208

J. SHEA SHOUN, P.E., STATE OF FLORIDA, PROFESSIONAL ENGINEER, LICENSE NO. 60923.
THIS ITEM HAS BEEN DIGITALLY SIGNED AND SEALED BY J. SHEA SHOUN, P.E. ON THE DATE INDICATED HERE.
PRINTED COPIES OF THIS DOCUMENT ARE NOT CONSIDERED SIGNED AND SEALED AND THE SIGNATURE MUST BE VERIFIED ON ANY ELECTRONIC COPIES.

MANATEE COUNTY
PUBLIC WORKS DEPARTMENT

PROJECT #	404-6042771	SURVEYED	ATWELL	12/2024
SEC./TWN./RGE	32/34/17	DESIGNED	JS/BR/JEA	12/2025
SCALE	SEE PLANS	DRAWN	BR/JS/JEA	12/2025

BLAKE HOSPITAL WATER MAIN PLAN AND PROFILE STA. 72+00 TO 77+80

SHEET NO. 04 of 19

Originally plotted by Jim Anderson at 1:1 scale on 3/3/2026 at 9:44:01 AM on ANSI full bleed D (22.00 x 34.00 Inches) paper using CIP-2025.STB. File Name: BLAKE HOSPITAL P_DESIGN.DWG

THE OFFICIAL RECORD OF THIS SHEET IS THE ELECTRONIC FILE DIGITALLY SIGNED AND SEALED UNDER RULE 61G15-23.004, F.A.C.

BLAKE HOSPITAL

EXHIBIT "A"
ALTERNATIVE WATER LINE

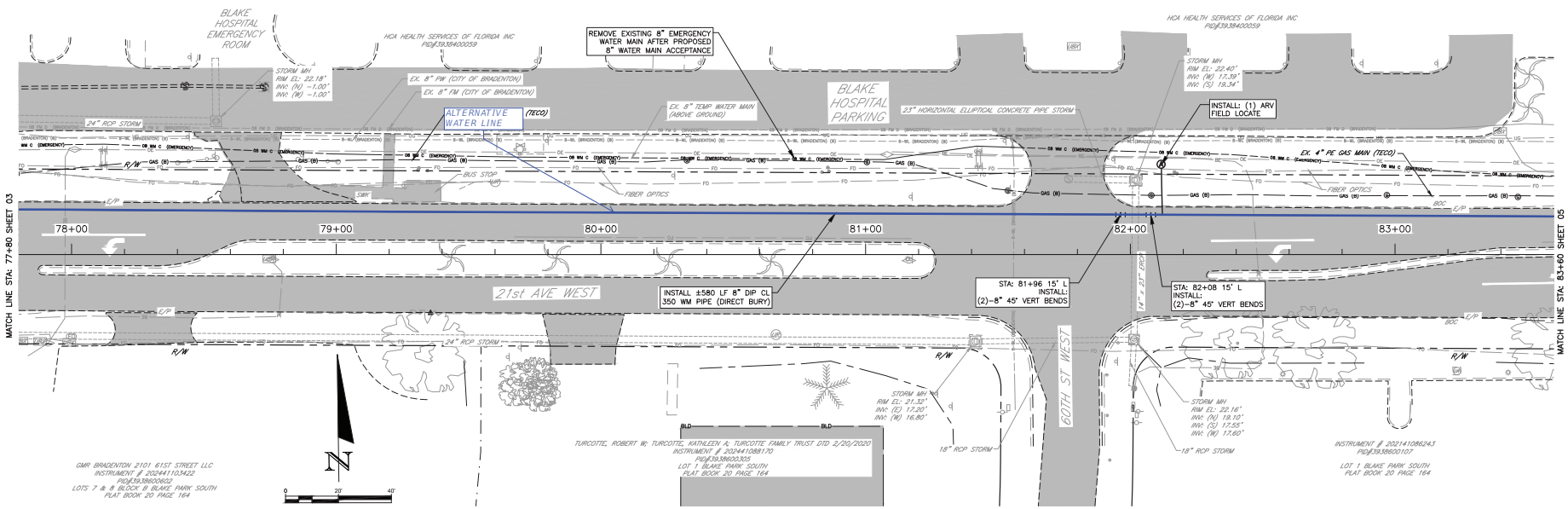

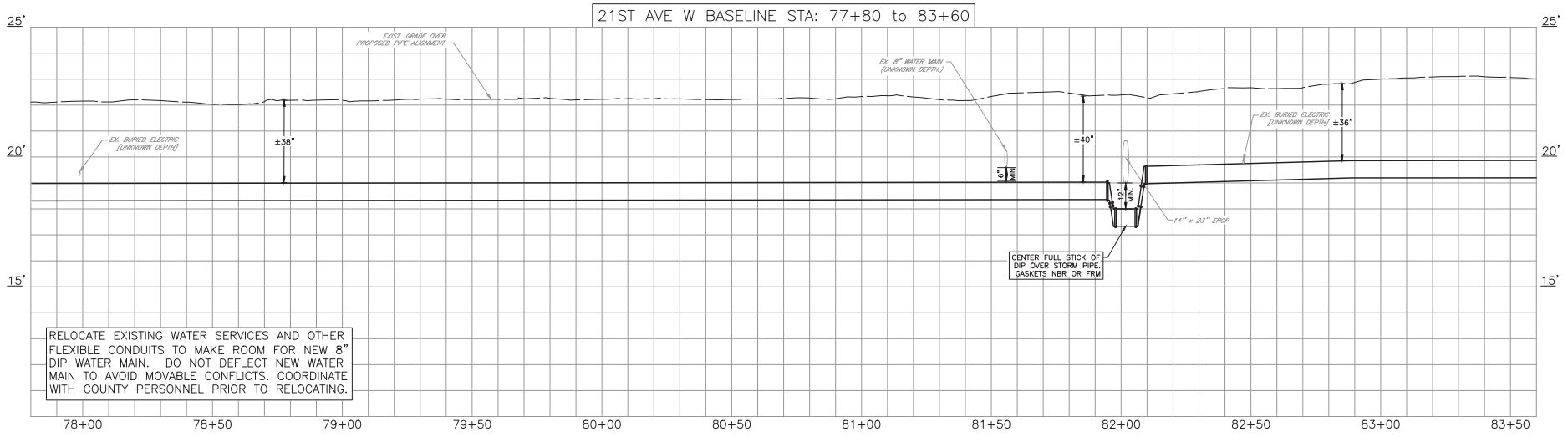

REVISIONS	
DATE	DESCRIPTION

Manatee County FLORIDA
1022 26th Avenue East, Bradenton, FL 34208

J. SHEA SHOUN, P.E., STATE OF FLORIDA, PROFESSIONAL ENGINEER, LICENSE NO. 60923.

THIS ITEM HAS BEEN DIGITALLY SIGNED AND SEALED BY J. SHEA SHOUN, P.E. ON THE DATE INDICATED HERE.

PRINTED COPIES OF THIS DOCUMENT ARE NOT CONSIDERED SIGNED AND SEALED AND THE SIGNATURE MUST BE VERIFIED ON ANY ELECTRONIC COPIES.

MANATEE COUNTY
PUBLIC WORKS DEPARTMENT

PROJECT #	404-6042771	SURVEYED	ATWELL	12/2024
SEC./TWN./RGE	32/34/17	DESIGNED	JS/BR/JEA	12/2025
SCALE	SEE PLANS	DRAWN	BR/JS/JEA	12/2025

BLAKE HOSPITAL WATER MAIN PLAN AND PROFILE STA. 77+80 TO 83+60

SHEET NO. 05 of 19

Originally plotted by Jim Anderson at 1:1 scale on 3/3/2026 at 9:44:12 AM on ANSI full bleed D (22.00 x 34.00 Inches) paper using CIP-2025.STB. File Name: BLAKE HOSPITAL P_DESIGN.DWG

BLAKE HOSPITAL

THE OFFICIAL RECORD OF THIS SHEET IS THE ELECTRONIC FILE DIGITALLY SIGNED AND SEALED UNDER RULE 61G15-23.004, F.A.C.

EXHIBIT "A"
ALTERNATIVE WATER LINE

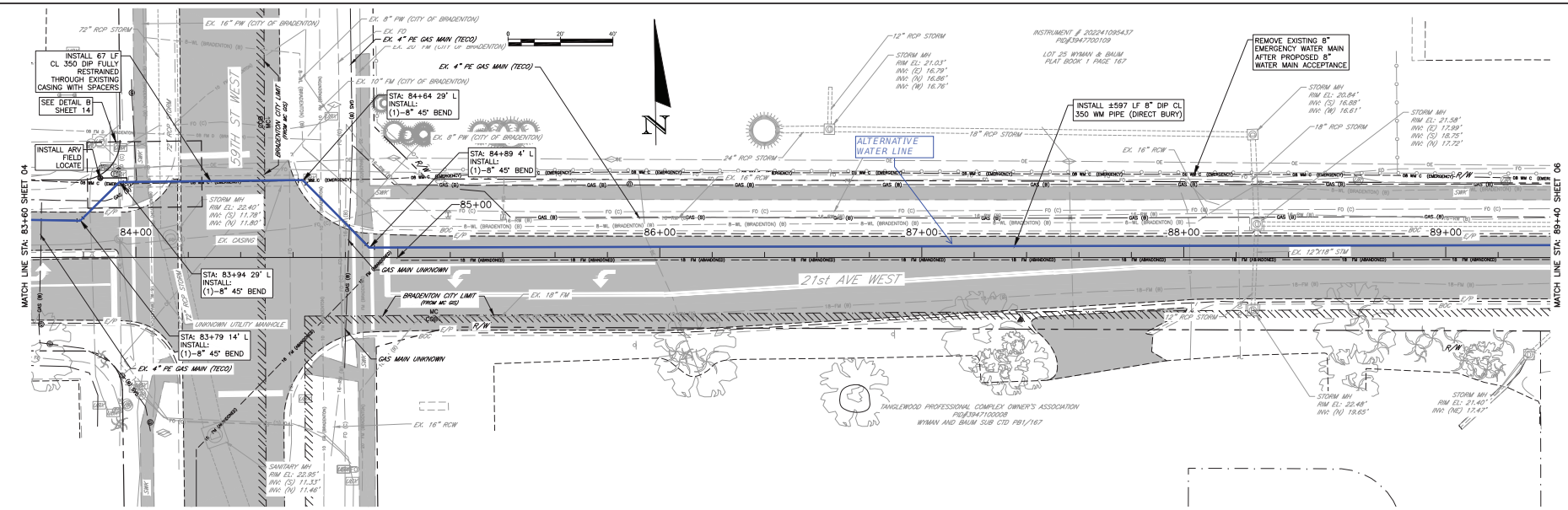

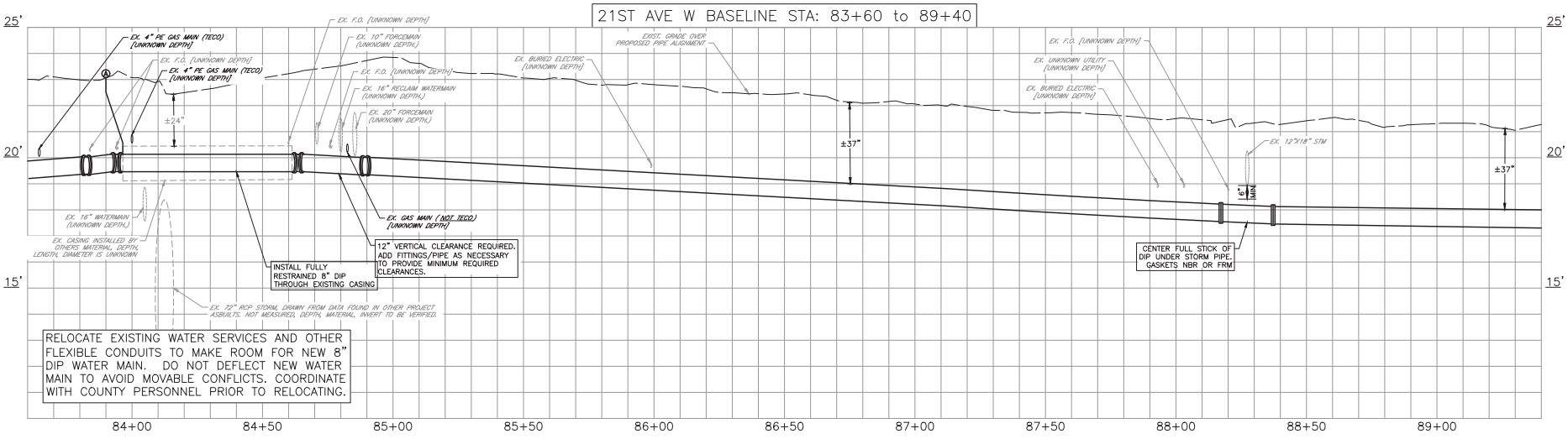

RELOCATE EXISTING WATER SERVICES AND OTHER FLEXIBLE CONDUITS TO MAKE ROOM FOR NEW 8" DIP WATER MAIN. DO NOT DEFLECT NEW WATER MAIN TO AVOID MOVABLE CONFLICTS. COORDINATE WITH COUNTY PERSONNEL PRIOR TO RELOCATING.

REVISIONS	
DATE	DESCRIPTION

Manatee County FLORIDA
1022 26th Avenue East, Bradenton, FL 34208

J. SHEA SHOUN, P.E., STATE OF FLORIDA, PROFESSIONAL ENGINEER, LICENSE NO. 60923.

THIS ITEM HAS BEEN DIGITALLY SIGNED AND SEALED BY J. SHEA SHOUN, P.E. ON THE DATE INDICATED HERE.

PRINTED COPIES OF THIS DOCUMENT ARE NOT CONSIDERED SIGNED AND SEALED AND THE SIGNATURE MUST BE VERIFIED ON ANY ELECTRONIC COPIES.

MANATEE COUNTY
PUBLIC WORKS DEPARTMENT

PROJECT #	404-6042771	SURVEYED	ATWELL	12/2024
SEC./TWN./RGE	32/34/17	DESIGNED	JS/BR/JEA	12/2025
SCALE	SEE PLANS	DRAWN	BR/JS/JEA	12/2025

BLAKE HOSPITAL WATER MAIN PLAN AND PROFILE STA. 83+60 TO 89+40

SHEET NO. 06 of 19

Originally plotted by Jim Anderson at 1:1 scale on 3/3/2026 at 9:44:08 AM on ANSI full bleed D (22.00 x 34.00 Inches) paper using CIP-2025.STB. File Name: BLAKE HOSPITAL P_DESIGN.DWG

BLAKE HOSPITAL

THE OFFICIAL RECORD OF THIS SHEET IS THE ELECTRONIC FILE DIGITALLY SIGNED AND SEALED UNDER RULE 61G15-23.004, F.A.C.

EXHIBIT "A"
ALTERNATIVE WATER LINE

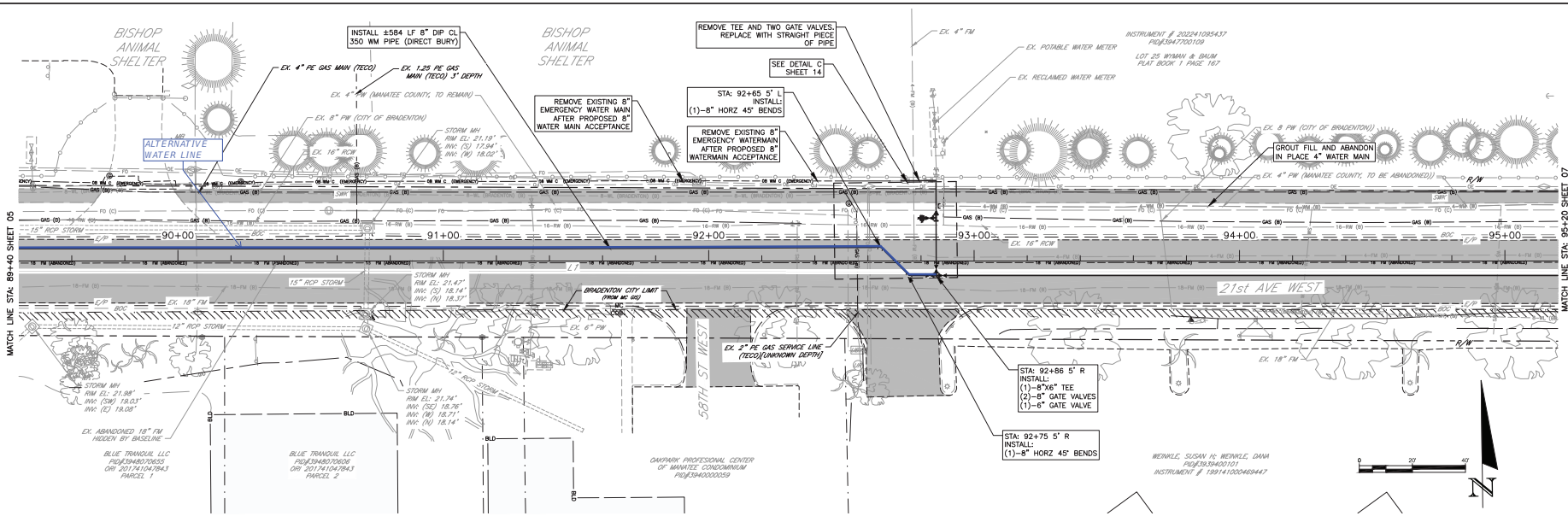

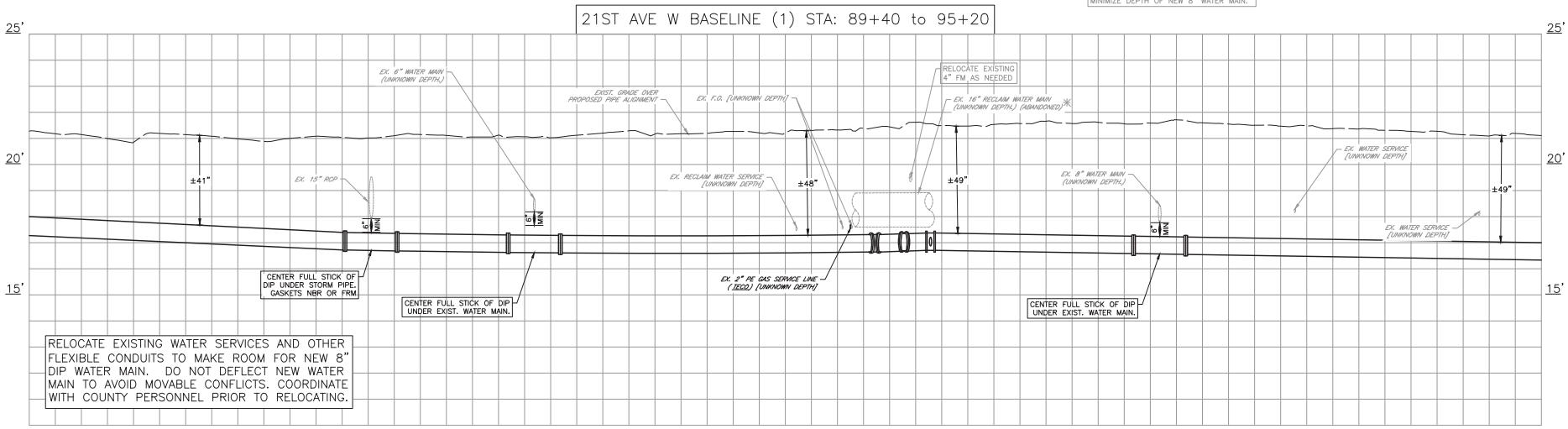

RELOCATE EXISTING WATER SERVICES AND OTHER FLEXIBLE CONDUITS TO MAKE ROOM FOR NEW 8" DIP WATER MAIN. DO NOT DEFLECT NEW WATER MAIN TO AVOID MOVABLE CONFLICTS. COORDINATE WITH COUNTY PERSONNEL PRIOR TO RELOCATING.

REVISIONS	
DATE	DESCRIPTION

Manatee County FLORIDA
1022 26th Avenue East, Bradenton, FL 34208

J. SHEA SHOUN, P.E., STATE OF FLORIDA, PROFESSIONAL ENGINEER, LICENSE NO. 60923.

THIS ITEM HAS BEEN DIGITALLY SIGNED AND SEALED BY J. SHEA SHOUN, P.E. ON THE DATE INDICATED HERE.

PRINTED COPIES OF THIS DOCUMENT ARE NOT CONSIDERED SIGNED AND SEALED AND THE SIGNATURE MUST BE VERIFIED ON ANY ELECTRONIC COPIES.

MANATEE COUNTY
PUBLIC WORKS DEPARTMENT

PROJECT #	404-6042771	SURVEYED	ATWELL	12/2024
SEC./TWN./RGE	32/34/17	DESIGNED	JS/BR/JEA	12/2025
SCALE	SEE PLANS	DRAWN	BR/JS/JEA	12/2025

BLAKE HOSPITAL
WATER MAIN
PLAN AND PROFILE STA. 89+40 TO 95+20

SHEET NO.
07 of 19

Originally plotted by Jim Anderson at 1:1 scale on 3/3/2026 at 9:44:20 AM on ANSI full bleed D (22.00 x 34.00 Inches) paper using CIP-2025.STB. File Name: BLAKE HOSPITAL P_DESIGN.DWG

BLAKE HOSPITAL

THE OFFICIAL RECORD OF THIS SHEET IS THE ELECTRONIC FILE DIGITALLY SIGNED AND SEALED UNDER RULE 61G15-23.004, F.A.C.

EXHIBIT “B”

Point of Connection

EXHIBIT "B"
POINT OF CONNECTION

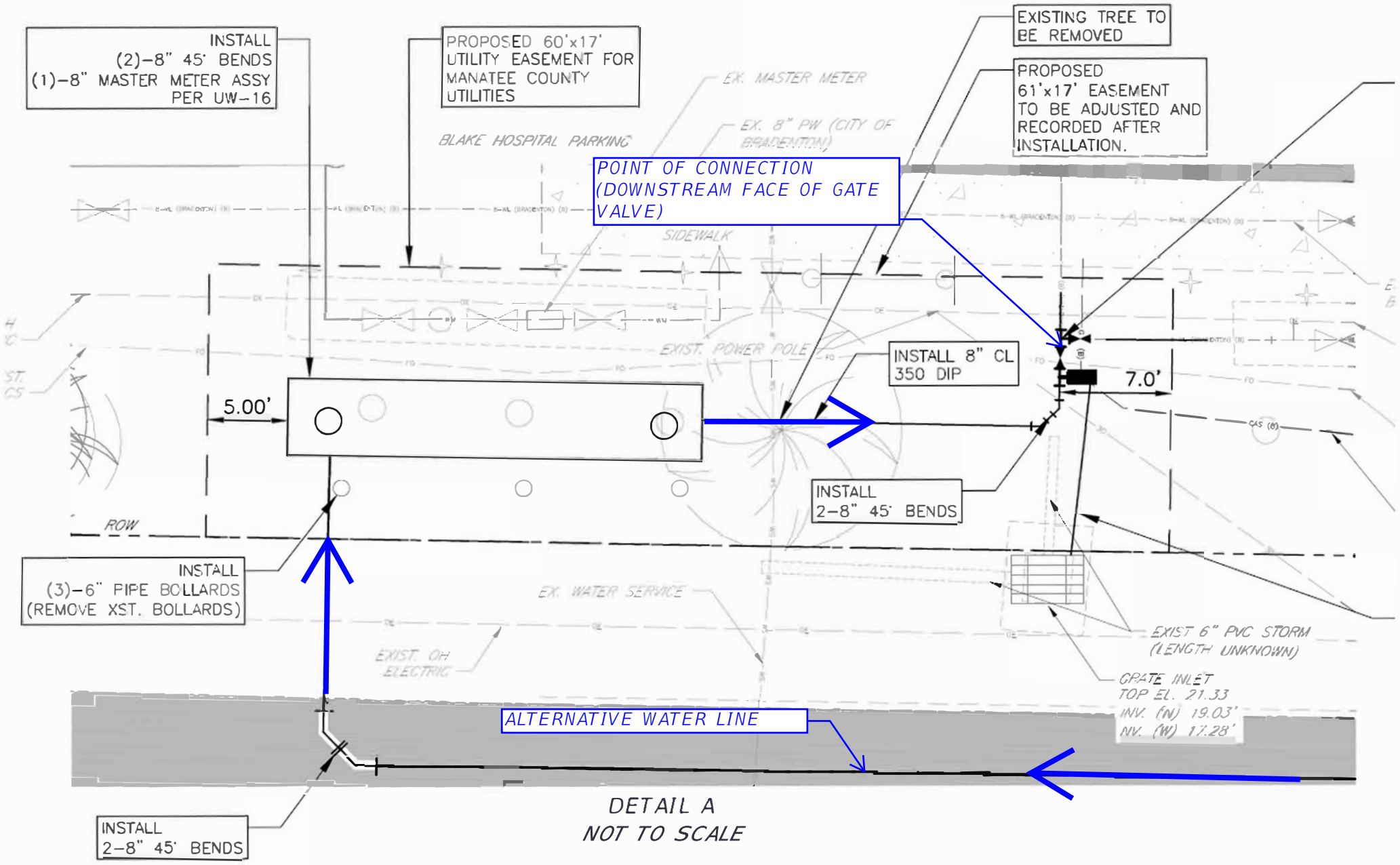

DETAIL A
NOT TO SCALE

AGENDA ITEM NO. 7.a

Item Cover Page

CITY COUNCIL MEETING AGENDA ITEM REPORT

DATE: May 27, 2026

SUBMITTED BY: Jamie Schindewolf, Planning & Community Development

ITEM TYPE: Ordinance

AGENDA SECTION: BUSINESS/ADVERTISING, PETITIONS, HEARINGS & COMMUNICATIONS

SUBJECT: ORDINANCE 4073 - SECOND READING AND PUBLIC HEARING
AN ORDINANCE OF THE CITY OF BRADENTON, FLORIDA, AMENDING THE CITY OF BRADENTON COMPREHENSIVE PLAN FUTURE LAND USE MAP TO DESIGNATE CERTAIN LAND GENERALLY LOCATED EAST OF 50TH STREET WEST AND 70 FEET SOUTH OF MANATEE AVE WEST, IDENTIFIED AS PARCEL ID 3629100003 AND 3629000005, AND MORE PARTICULARLY DESCRIBED HEREIN, CONTAINING APPROXIMATELY 0.397 ACRES AND OWNED BY SHIV OHM P L AND ZEEVA RE LLC, RESPECTIVELY, UNDER THE SUBURBAN COMMERCIAL CORRIDOR FUTURE LAND USE CATEGORY; PROVIDING FOR APPLICABILITY; PROVIDING FOR SEVERABILITY; AND PROVIDING FOR AN EFFECTIVE DATE.

SUGGESTED ACTION: Move to approve or deny Ordinance 4073.

Is this item Quasi-Judicial?
No

Does this item require a public hearing?
Yes

EXPLANATION:
Robert Gause, Agent for Shiv Ohm P l and Zeeva RE LCC has petitioned to annex the subject property. City Council approved the annexation under Ordinance 4072 on May 13, 2026. As part of the annexation process, the property must be

assigned a future land use designation and a zoning classification (separate application) under the City of Bradenton regulations.

FINANCIAL IMPACT:
N/A

ATTORNEY REVIEW/RECOMMENDATION:
Reviewed by City Attorney Rudacille.

SUGGESTED MOTION:
Motion to approve or deny Ordinance 4073.

ATTACHMENTS:
Ordinance 4073
Staff Report
Application Materials

ORDINANCE NO. 4073

AN ORDINANCE OF THE CITY OF BRADENTON, FLORIDA, AMENDING THE CITY OF BRADENTON COMPREHENSIVE PLAN FUTURE LAND USE MAP TO DESIGNATE CERTAIN LAND GENERALLY LOCATED EAST OF 50TH STREET WEST AND 70 FEET SOUTH OF MANATEE AVE WEST, IDENTIFIED AS PARCEL ID 3629100003 AND 3629000005, AND MORE PARTICULARLY DESCRIBED HEREIN, CONTAINING APPROXIMATELY 0.397 ACRES AND OWNED BY SHIV OHM P L AND ZEEVA RE LLC, RESPECTIVELY, UNDER THE SUBURBAN COMMERCIAL CORRIDOR FUTURE LAND USE CATEGORY; PROVIDING FOR APPLICABILITY; PROVIDING FOR SEVERABILITY; AND PROVIDING FOR AN EFFECTIVE DATE.

WHEREAS, Article VIII, Section 2, Constitution of the State of Florida, as revised in 1968, provides for and establishes municipalities and grants to those municipalities governmental, corporate, and proprietary powers to enable them to conduct municipal government, perform municipal functions, render municipal services, and authorizes said municipalities to exercise any power for municipal purposes, except as otherwise provided by law; and,

WHEREAS, Chapter 166, Florida Statutes, The Municipal Home Rule Powers Act, implements by general law the authority and jurisdiction granted to municipalities by the Florida Constitution and establishes home rule for said municipalities; and,

WHEREAS, Chapter 163, Florida Statutes, Part II, Local Government Comprehensive Planning/Land Development Regulation, requires, authorizes and empowers municipalities to prepare, adopt, amend and enforce Comprehensive Plans for the development of the City and empowering the City Council of the City of Bradenton to plan for the City's future development and growth in order to responsibly guide the future growth and development of the City, to implement adopted or amended Comprehensive Plans by the adoption of appropriate land development regulations and to establish, support and maintain procedures to carry out the provisions and purposes of said Statute; and,

WHEREAS, pursuant to Section 163.3174, Florida Statutes, the City Council of the City of Bradenton duly designated its Planning Commission as the Local Planning Agency (LPA) for the City of Bradenton; and,

WHEREAS, the City amends Comprehensive Plans and maps from time to time, and has adopted procedures by which to amend these documents, requiring a public hearing before the Planning Commission and

City Council; and

WHEREAS, Shiv Ohm, P.L., is the owner of approximately 0.198 acres of real property located at 507 50th Street West (PID# 3629100003)(the "Shiv Ohm Property"); and

WHEREAS, Zeeva RE, LLC, is the owner of approximately 0.198 acres of real property located at 509 50th Street West (PID# 3629000005) (the "Zeeva RE Property"); and

WHEREAS, the Shiv Ohm Property and Zeeva RE Property collectively are legally described and depicted on **Exhibit A**, attached hereto and incorporated herein (the "Property"); and

WHEREAS, Robert Gause, Agent for Zeeva RE, LLC and Shiv Ohm, submitted a Future Land Use Map application to designate the Property, consisting of approximately .397 acres, as SCC, Suburban Commercial Corridor (the "Amendment"); and

WHEREAS, the LPA and the City Council have in the preparation of the Amendment to the City's Comprehensive Plan performed or caused to be performed, the necessary studies and surveys, the collection of appropriate data, the holding of such public hearings, workshops and meetings, as necessary, and have effectively provided for public participation, notice, and opportunity for oral or written comments; and,

WHEREAS, the City of Bradenton's LPA held a public hearing on April 15, 2026, to consider the proposed Amendment; and,

WHEREAS, the LPA having reviewed and considered all comments received during said hearing, found that the Amendment furthers the goals, objectives and policies of the City's Comprehensive Plan and recommended said Amendment to the City Council for approval; and,

WHEREAS, the City Council held a public hearing on May 27, 2026, to consider the proposed Amendment; and,

WHEREAS, based on the matters of record received by the City Council at the required public hearing held on May 27, 2026 after proper notice, including comments received from applicable reviewing agencies, and finding the proposed Amendment meets the requirements of Chapter 163, Florida Statutes, and is consistent with the goals, objectives and policies of the City's Comprehensive Plan, the City Council, in the exercise of its home rule and statutory authority, has determined it necessary and desirable, in order to protect the public health, safety and welfare, to adopt said Amendment to the Comprehensive Plan.

NOW, THEREFORE, BE IT ORDAINED BY THE CITY COUNCIL OF THE CITY OF BRADENTON, FLORIDA, AS FOLLOWS:

1. The recitals set forth above are true and correct and are hereby adopted as findings by the City Council for the adoption of this Ordinance. Based on such findings the City Council determines that the City of Bradenton Comprehensive Plan should be amended as described in Sections 2 below.

2. The Future Land Use Map of the City of Bradenton is hereby amended, classifying the Property as SCC, Suburban Commercial Corridor.

3. The applicability and effect of the City of Bradenton Comprehensive Plan shall be as provided by the Chapter 163, Florida Statutes, and this Ordinance. Except to the extent amended hereby, the Comprehensive Plan is hereby ratified, confirmed and remains in full force and effect.

4. In the event any provision or portion of this Ordinance is declared by any Court of competent jurisdiction to be void, unconstitutional or unenforceable, then, and in that event, all remaining provisions and portions of this Ordinance shall remain in full force and effect.

5. This Ordinance shall be contingent upon Ordinance 4072 becoming effective shall otherwise become effective as provided by Florida law.

PASSED AND DULY ADOPTED, BY THE CITY COUNCIL FOR THE CITY OF BRADENTON, FLORIDA, WITH A QUORUM PRESENT AND VOTING, THIS 27th DAY OF MAY, 2026.

THE CITY OF BRADENTON, BY AND THROUGH THE CITY COUNCIL OF THE CITY OF BRADENTON

ATTEST:

_____

Tamara Melton
CITY CLERK

_____

Gene Brown
MAYOR

APPROVED AS TO FORM:

_____

Scott Rudacille
CITY ATTORNEY

Planning Commission	April 15, 2026
City Council 1st Reading	May 13, 2026
City Council 2nd Reading and Public Hearing	May 27, 2026
Local Planning Agency ad published	April 5, 2026
City Council hearing ad published	May 3, 2026, May 17, 2026

EXHIBIT A

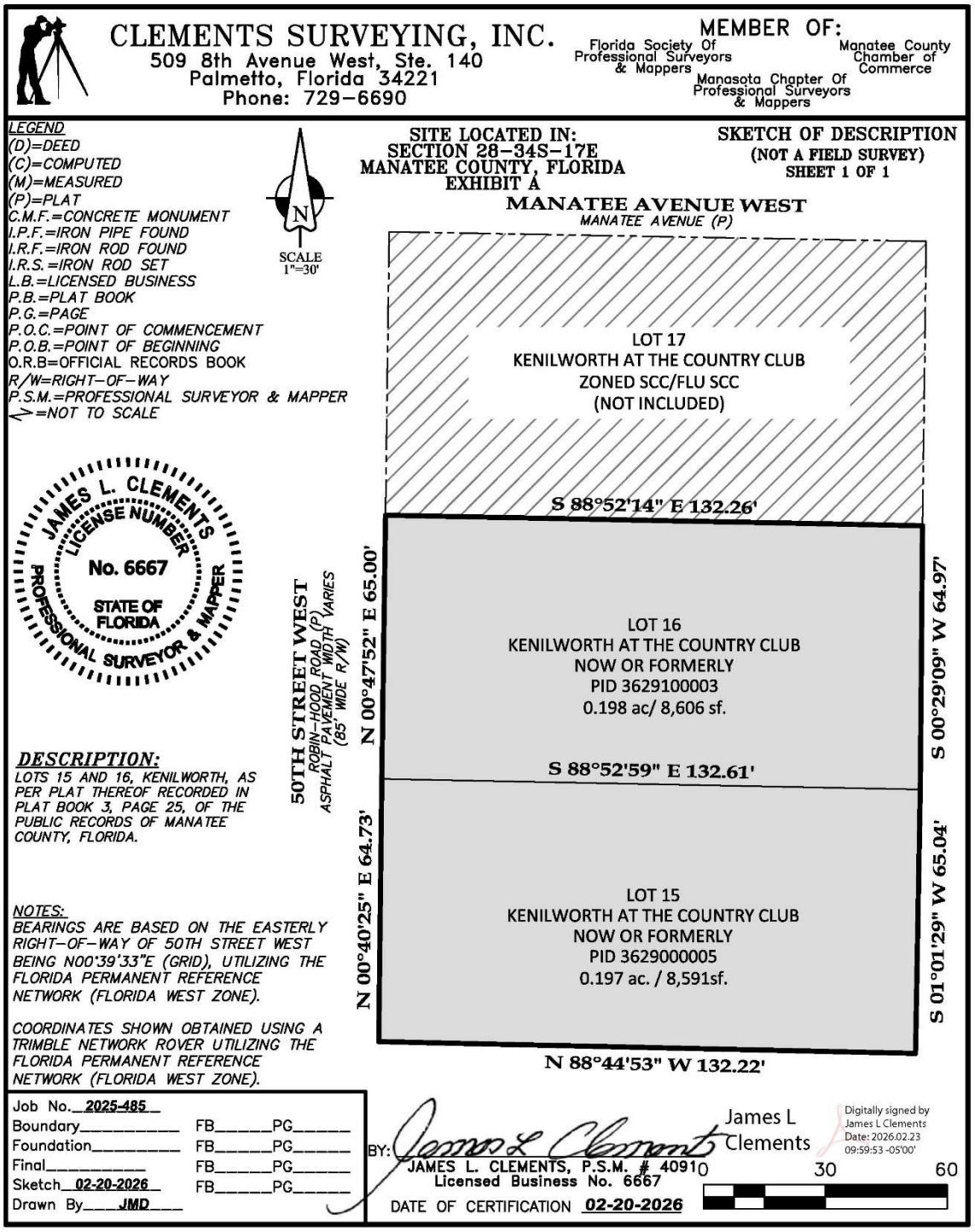
CLEMENTS SURVEYING, INC.
509 8th Avenue West, Ste. 140
Palmetto, Florida 34221
Phone: 729-6690
MEMBER OF:
Florida Society Of Professional Surveyors & Mappers
Manatee County Chamber of Commerce
Manasota Chapter Of Professional Surveyors & Mappers
LEGEND
(D)=DEED
(C)=COMPUTED
(M)=MEASURED
(P)=PLAT
C.M.F.=CONCRETE MONUMENT
I.P.F.=IRON PIPE FOUND
I.R.F.=IRON ROD FOUND
I.R.S.=IRON ROD SET
L.B.=LICENSED BUSINESS
P.B.=PLAT BOOK
P.G.=PAGE
P.O.C.=POINT OF COMMENCEMENT
P.O.B.=POINT OF BEGINNING
O.R.B=OFFICIAL RECORDS BOOK
R/W=RIGHT-OF-WAY
P.S.M.=PROFESSIONAL SURVEYOR & MAPPER
NTS=NOT TO SCALE
N
SCALE 1"=30'
SITE LOCATED IN:
SECTION 28-34S-17E
MANATEE COUNTY, FLORIDA
EXHIBIT A
SKETCH OF DESCRIPTION
(NOT A FIELD SURVEY)
SHEET 1 OF 1
MANATEE AVENUE WEST
MANATEE AVENUE (P)
LOT 17
KENILWORTH AT THE COUNTRY CLUB
ZONED SCC/FLU SCC
(NOT INCLUDED)
S 88°52'14" E 132.26'
LOT 16
KENILWORTH AT THE COUNTRY CLUB
NOW OR FORMERLY
PID 3629100003
0.198 ac/ 8,606 sf.
S 88°52'59" E 132.61'
LOT 15
KENILWORTH AT THE COUNTRY CLUB
NOW OR FORMERLY
PID 3629000005
0.197 ac. / 8,591sf.
N 88°44'53" W 132.22'
N 00°47'52" E 65.00'
N 00°40'25" E 64.73'
S 00°29'09" W 64.97'
S 01°01'29" W 65.04'
50TH STREET WEST
ROBIN-HOOD ROAD (P)
ASPHALT PAVEMENT WIDTH VARIES
(85' WIDE R/W)
JAMES L. CLEMENTS
LICENSE NUMBER
No. 6667
STATE OF FLORIDA
PROFESSIONAL SURVEYOR & MAPPER
DESCRIPTION:
LOTS 15 AND 16, KENILWORTH, AS PER PLAT THEREOF RECORDED IN PLAT BOOK 3, PAGE 25, OF THE PUBLIC RECORDS OF MANATEE COUNTY, FLORIDA.
NOTES:
BEARINGS ARE BASED ON THE EASTERLY RIGHT-OF-WAY OF 50TH STREET WEST BEING N00°39'33"E (GRID), UTILIZING THE FLORIDA PERMANENT REFERENCE NETWORK (FLORIDA WEST ZONE).
COORDINATES SHOWN OBTAINED USING A TRIMBLE NETWORK ROVER UTILIZING THE FLORIDA PERMANENT REFERENCE NETWORK (FLORIDA WEST ZONE).
Job No. 2025-485
Boundary FB PG
Foundation FB PG
Final FB PG
Sketch 02-20-2026 FB PG
Drawn By JMD
BY:
James L Clements
Digitally signed by James L Clements
Date: 2026.02.23 09:59:53 -05'00'
JAMES L. CLEMENTS, P.S.M. # 4091
Licensed Business No. 6667
DATE OF CERTIFICATION 02-20-2026
0
30
60

City of Bradenton
Planning and Community Development Department
City Council Public Hearings
May 13 and May 27, 2026

Staff Report

Case Number:	PLN-CPS-26-0002 – ORD 4073
Applicant:	Robert Gause, Agent
Owner:	Shiv Ohm P l and Zeeva RE LCC
Address:	507 50TH ST W and 509 50TH ST W
Parcel ID No:	3629100003 and 3629000005
Current Zoning:	Manatee County PD-M, Professional Medium Office; Manatee County RSF 4.5, Residential Single Family 4.5
Future Land Use:	Manatee County ROR, Retail Office Residential; Manatee County RES-6, Residential 6 DU/AC
Flood Zone:	X

Surrounding Property - Zoning and Future Land Use:

Current Zoning:

North:	City of Bradenton – Suburban Commercial Corridor (SCC)
South:	Manatee County – RSF 4.5
East:	Manatee County - RSF 4.5/PR-M
West:	Manatee County – RSF 4.5/PR-M

Future Land Use:

North:	City of Bradenton – Suburban Commercial Corridor (SCC)
South:	Manatee County – RES-6
East:	Manatee County – RES-6/ROR
West:	Manatee County – RES-6/ROR

SUMMARY OF REQUEST

Robert Gause, Agent for Shiv Ohm P l and Zeeva RE LCC is pursuing an annexation of the subject property. As part of the annexation process, the property must be assigned a future land use designation and a zoning classification under the City of Bradenton regulations. The map below shows the area of the request along with surrounding Future Land Use designations.

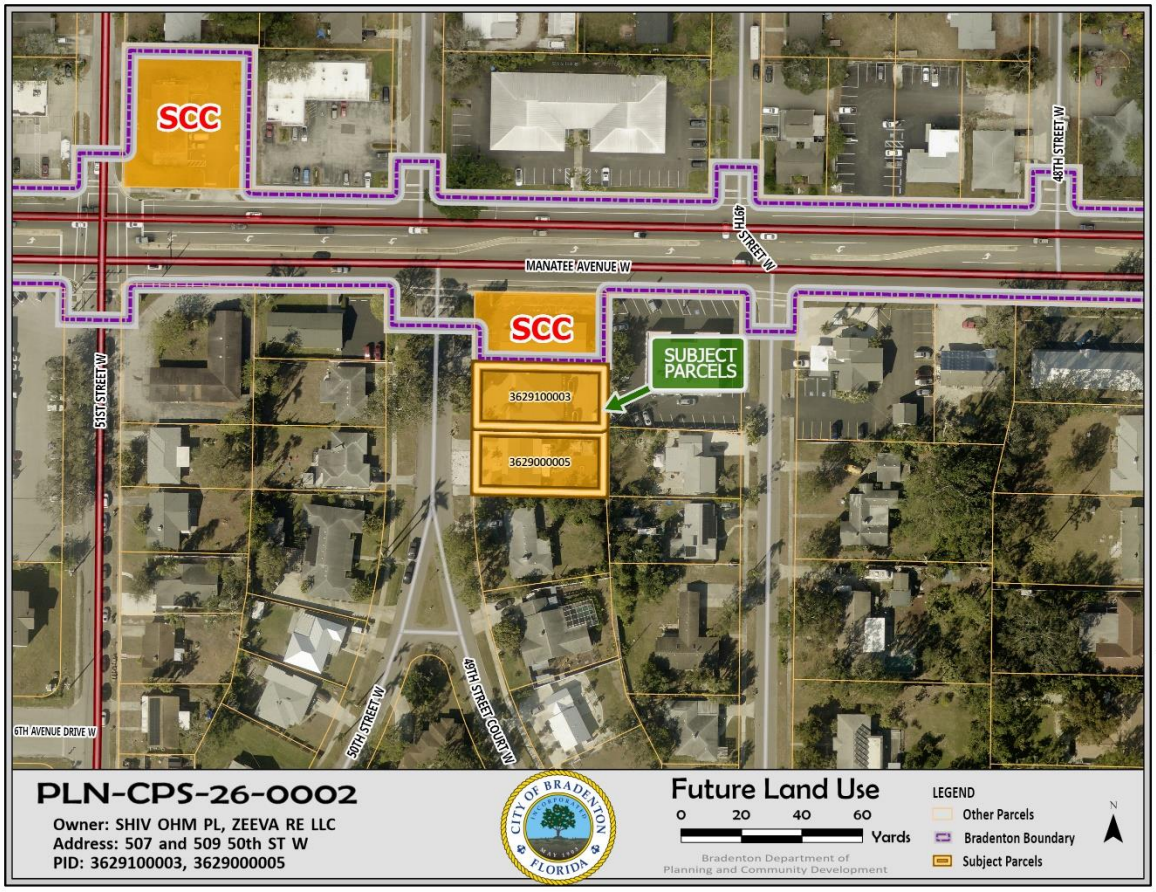

Suburban Commercial Corridor *(Proposed Future Land Use Classification):*

The Comprehensive Plan describes the Suburban Commercial Corridor Future Land Use category as a designation for:

> Commercial uses commensurate with suburban arterial roadways such as gas stations, car washes, drive through restaurants, open storage, mini-storage, retail, office, automotive sales, automotive repair and service, hotel, motel, restaurants, and social services. Outdoor storage is prohibited. The maximum floor area ratio is 0.50.

Suburban Commercial Corridor (SCC) is the future land use designation along much of Manatee Ave W, Manatee Ave E, and Cortez Rd W where these corridors abut properties in City of Bradenton jurisdiction. The designation is primarily granted for property directly adjacent to these corridors, but there are instances where it has been placed a number of parcels deep off of the corridor.

ANALYSIS

This application was submitted with a concurrent application to designate the property with the Suburban Commercial Corridor zoning classification.

The Suburban Commercial Corridor zoning classification allows uses that align with those mentioned in the description of the Suburban Commercial Corridor Future Land Use classification. Suburban Commercial Corridor zoning and Suburban Commercial Corridor future land use are highly compatible.

On April 15, 2026, the City of Bradenton Planning Commission voted unanimously to recommend approval of the zoning designation.

Respectfully submitted,

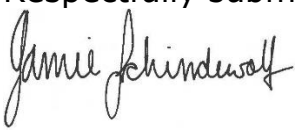

Jamie Schindewolf
Senior Planner

EXHIBIT A: Legal Description and Survey
EXHIBIT B: Location Map
EXHIBIT C: Future Land Use Map (Current)
EXHIBIT D: Zoning Map

EXHIBIT A

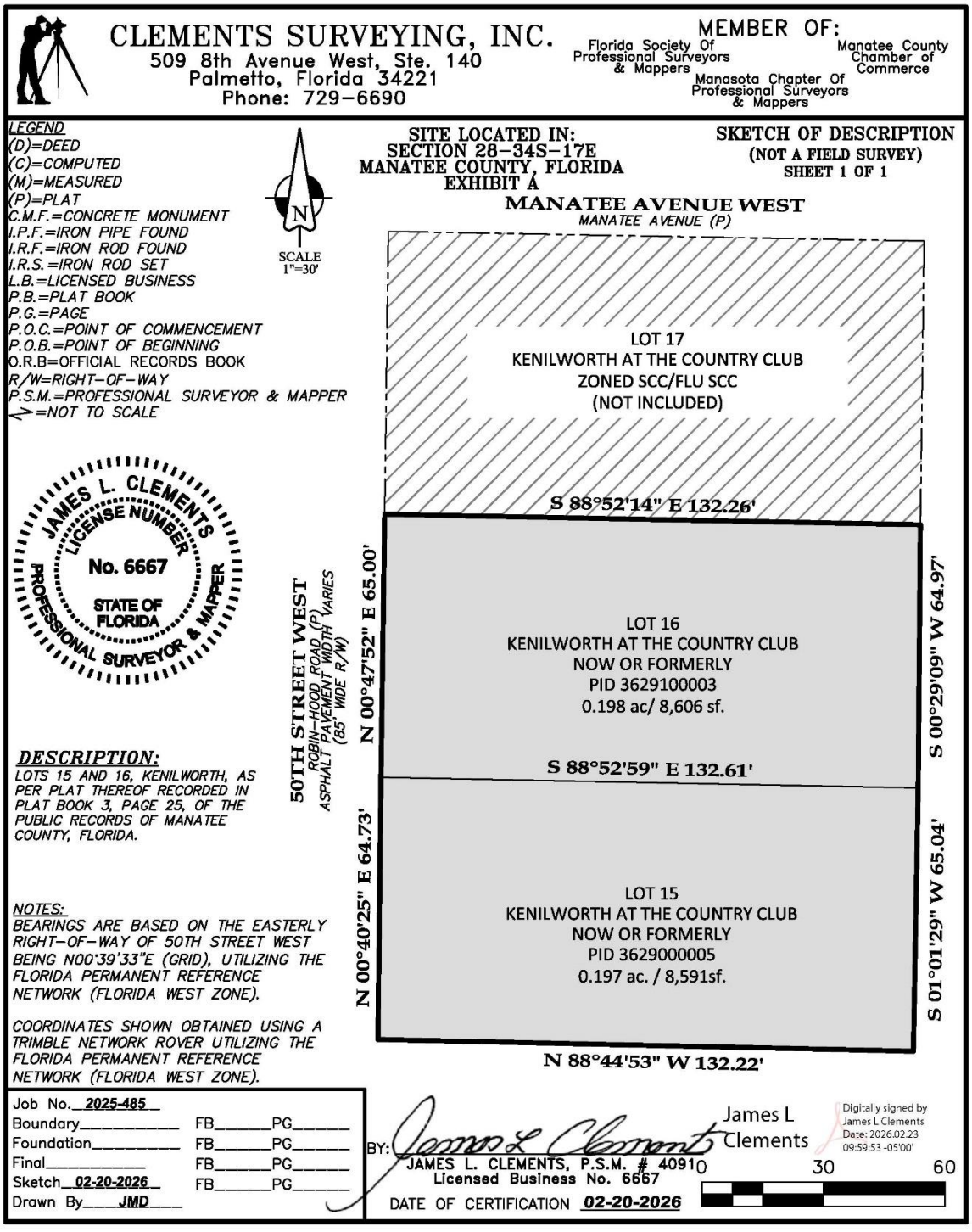
CLEMENTS SURVEYING, INC.
509 8th Avenue West, Ste. 140
Palmetto, Florida 34221
Phone: 729-6690
MEMBER OF:
Florida Society Of Professional Surveyors & Mappers
Manatee County Chamber of Commerce
Manasota Chapter Of Professional Surveyors & Mappers
LEGEND
(D)=DEED
(C)=COMPUTED
(M)=MEASURED
(P)=PLAT
C.M.F.=CONCRETE MONUMENT
I.P.F.=IRON PIPE FOUND
I.R.F.=IRON ROD FOUND
I.R.S.=IRON ROD SET
L.B.=LICENSED BUSINESS
P.B.=PLAT BOOK
P.G.=PAGE
P.O.C.=POINT OF COMMENCEMENT
P.O.B.=POINT OF BEGINNING
O.R.B=OFFICIAL RECORDS BOOK
R/W=RIGHT-OF-WAY
P.S.M.=PROFESSIONAL SURVEYOR & MAPPER
<>=NOT TO SCALE
N
SCALE 1"=30'
SITE LOCATED IN:
SECTION 28-34S-17E
MANATEE COUNTY, FLORIDA
EXHIBIT A
SKETCH OF DESCRIPTION
(NOT A FIELD SURVEY)
SHEET 1 OF 1
MANATEE AVENUE WEST
MANATEE AVENUE (P)
LOT 17
KENILWORTH AT THE COUNTRY CLUB
ZONED SCC/FLU SCC
(NOT INCLUDED)
S 88°52'14" E 132.26'
LOT 16
KENILWORTH AT THE COUNTRY CLUB
NOW OR FORMERLY
PID 3629100003
0.198 ac/ 8,606 sf.
S 88°52'59" E 132.61'
LOT 15
KENILWORTH AT THE COUNTRY CLUB
NOW OR FORMERLY
PID 3629000005
0.197 ac. / 8,591sf.
N 88°44'53" W 132.22'
N 00°47'52" E 65.00'
N 00°40'25" E 64.73'
S 00°29'09" W 64.97'
S 01°01'29" W 65.04'
50TH STREET WEST
ROBIN-HOOD ROAD (P)
ASPHALT PAVEMENT WIDTH VARIES
(85' WIDE R/W)
JAMES L. CLEMENTS
LICENSE NUMBER
No. 6667
STATE OF FLORIDA
PROFESSIONAL SURVEYOR & MAPPER
DESCRIPTION:
LOTS 15 AND 16, KENILWORTH, AS PER PLAT THEREOF RECORDED IN PLAT BOOK 3, PAGE 25, OF THE PUBLIC RECORDS OF MANATEE COUNTY, FLORIDA.
NOTES:
BEARINGS ARE BASED ON THE EASTERLY RIGHT-OF-WAY OF 50TH STREET WEST BEING N00°39'33"E (GRID), UTILIZING THE FLORIDA PERMANENT REFERENCE NETWORK (FLORIDA WEST ZONE).
COORDINATES SHOWN OBTAINED USING A TRIMBLE NETWORK ROVER UTILIZING THE FLORIDA PERMANENT REFERENCE NETWORK (FLORIDA WEST ZONE).
Job No. 2025-485
Boundary FB PG
Foundation FB PG
Final FB PG
Sketch 02-20-2026 FB PG
Drawn By JMD
BY: James L Clements
Digitally signed by James L Clements
Date: 2026.02.23 09:59:53 -05'00'
JAMES L. CLEMENTS, P.S.M. # 4091
Licensed Business No. 6667
DATE OF CERTIFICATION 02-20-2026
0 30 60

EXHIBIT B

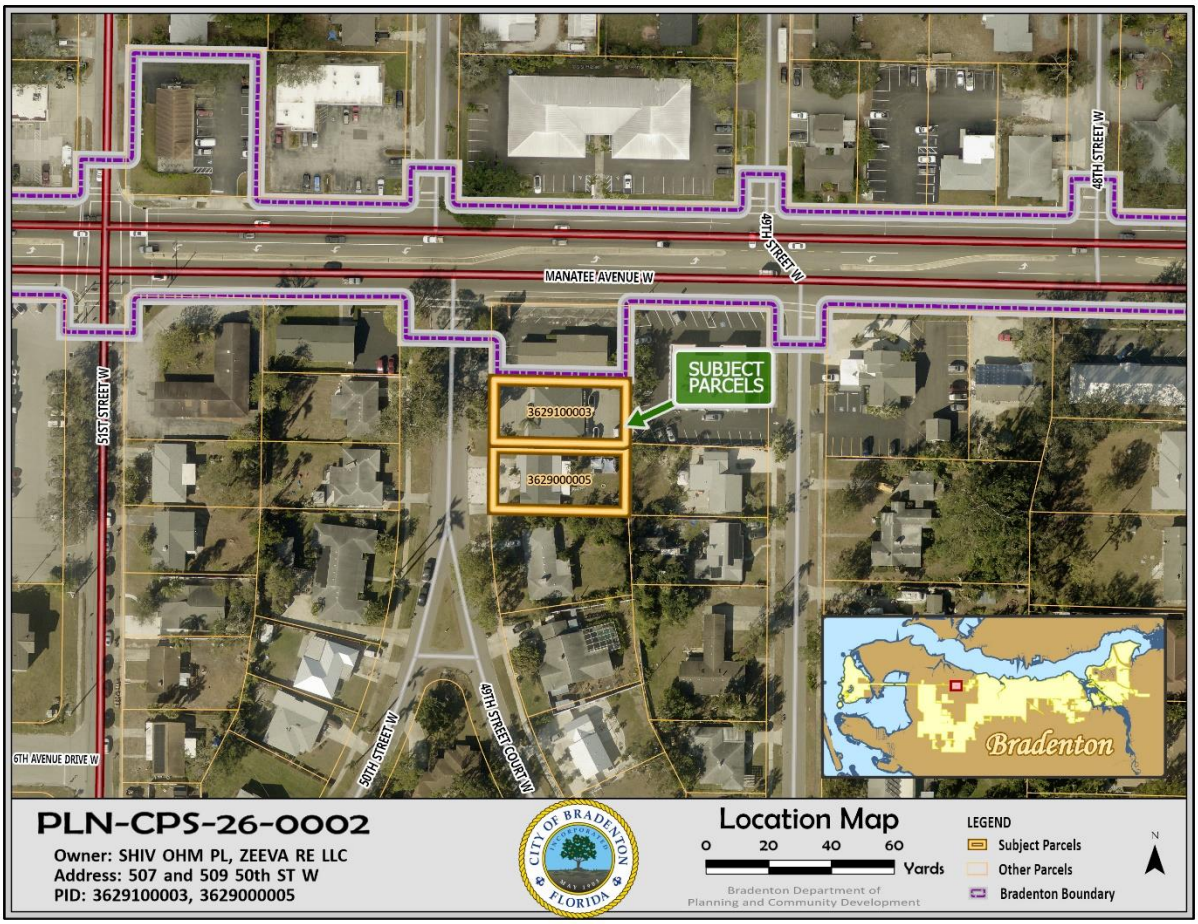
MANATEE AVENUE W
49TH STREET W
48TH STREET W
51ST STREET W
SUBJECT PARCELS
3629100003
3629000005
6TH AVENUE DRIVE W
50TH STREET W
49TH STREET COURT W
Bradenton
PLN-CPS-26-0002
Owner: SHIV OHM PL, ZEEVA RE LLC
Address: 507 and 509 50th ST W
PID: 3629100003, 3629000005
CITY OF BRADENTON
FLORIDA
Location Map
0 20 40 60
Yards
Bradenton Department of
Planning and Community Development
LEGEND
Subject Parcels
Other Parcels
Bradenton Boundary
N

EXHIBIT C

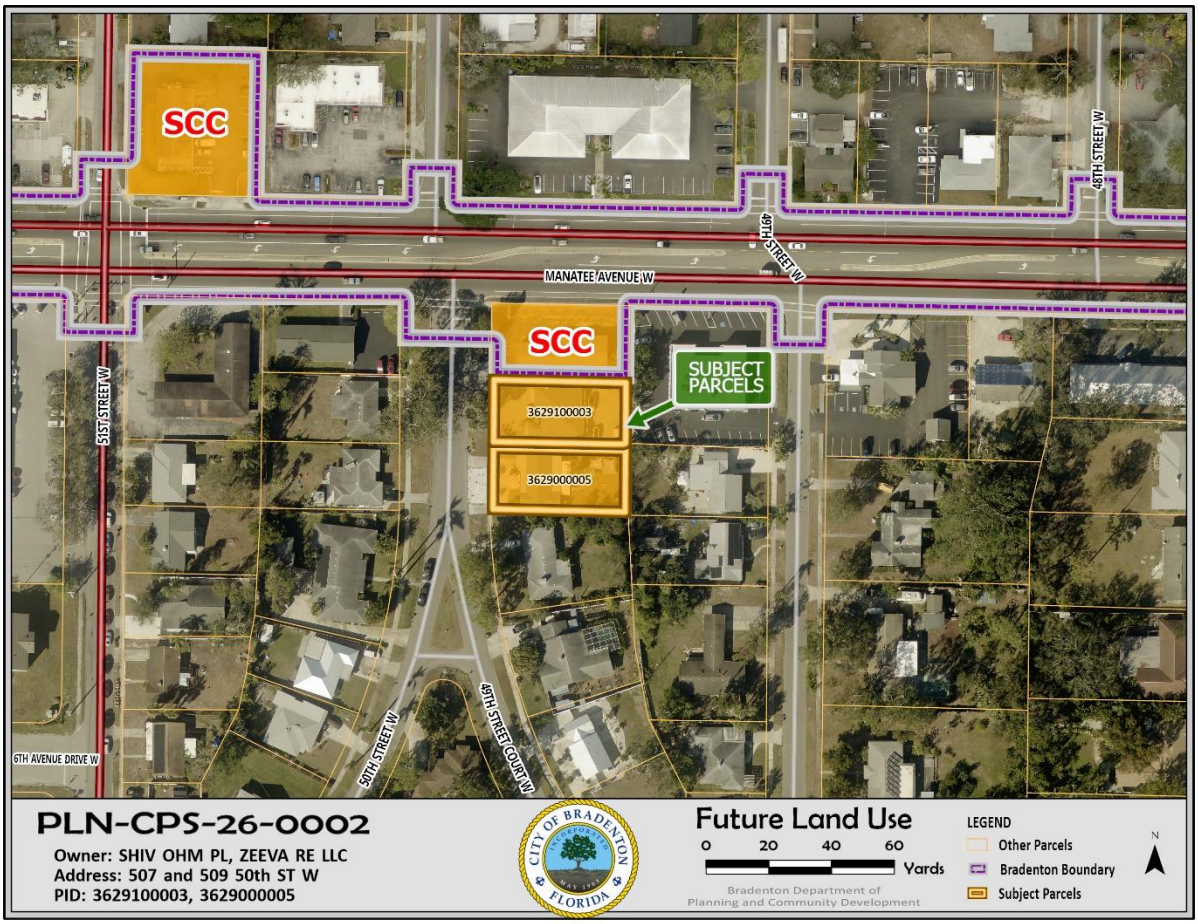
SCC
SCC
MANATEE AVENUE W
49TH STREET W
48TH STREET W
51ST STREET W
SUBJECT PARCELS
3629100003
3629000005
6TH AVENUE DRIVE W
50TH STREET W
49TH STREET COURT W
PLN-CPS-26-0002
Owner: SHIV OHM PL, ZEEVA RE LLC
Address: 507 and 509 50th ST W
PID: 3629100003, 3629000005
CITY OF BRADENTON
FLORIDA
Future Land Use
0 20 40 60
Yards
Bradenton Department of
Planning and Community Development
LEGEND
Other Parcels
Bradenton Boundary
Subject Parcels
N

EXHIBIT D

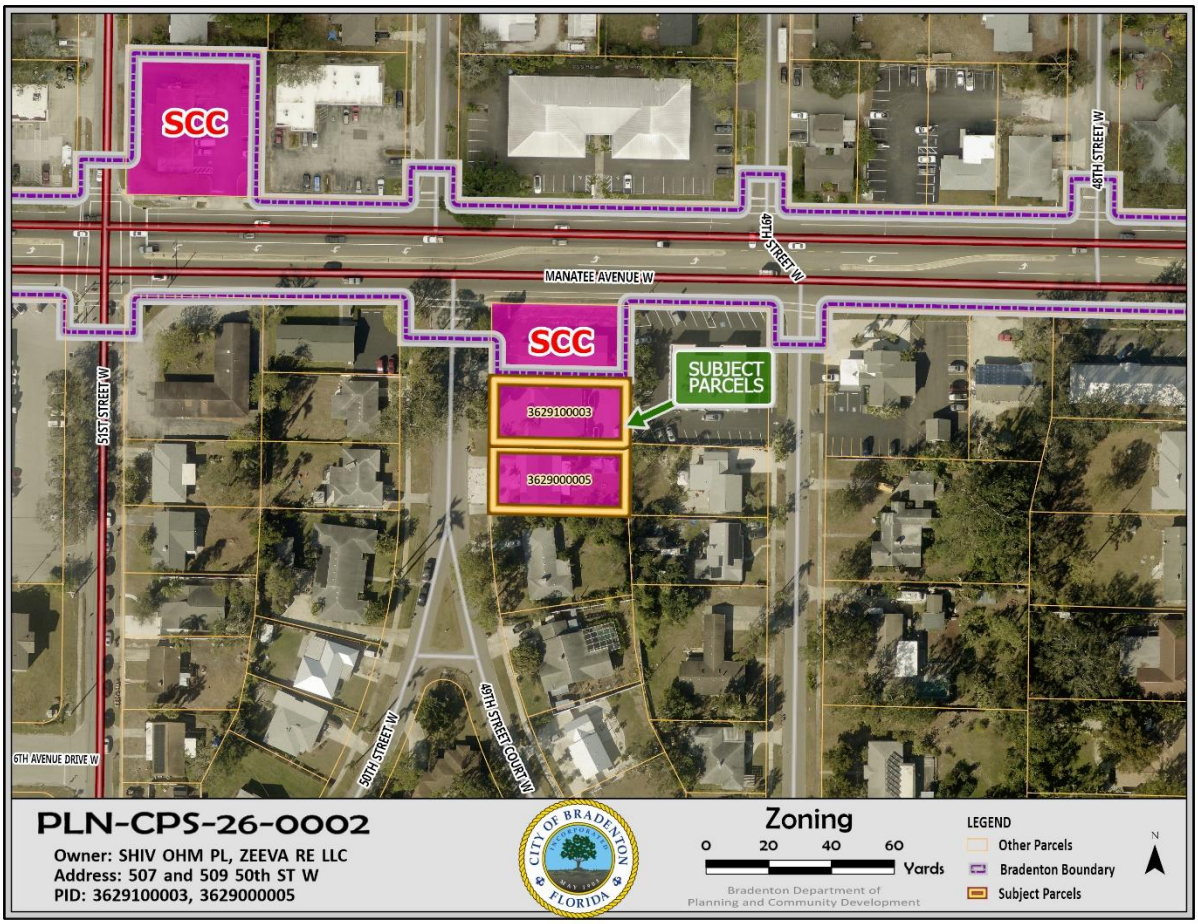
SCC
SCC
MANATEE AVENUE W
49TH STREET W
48TH STREET W
51ST STREET W
SUBJECT PARCELS
3629100003
3629000005
6TH AVENUE DRIVE W
50TH STREET W
49TH STREET COURT W
PLN-CPS-26-0002
Owner: SHIV OHM PL, ZEEVA RE LLC
Address: 507 and 509 50th ST W
PID: 3629100003, 3629000005
CITY OF BRADENTON
FLORIDA
Zoning
0 20 40 60
Yards
Bradenton Department of
Planning and Community Development
LEGEND
Other Parcels
Bradenton Boundary
Subject Parcels
N

Gause and Associates, Inc.

Landscape Architecture

Land Planning

Project Management

Environmental

Irrigation Design

Consulting Arborist

March 3, 2026

City of Bradenton Planning Dept.
101 Old Main St.
Bradenton, Fl. 342025

RE: 507 & 509 50th St. W. Annexation, Rezoning and Comp Plan Map Amendment change

Dear Sirs/Madams,

The owners of the parcels located at 507 50th St. W. (PID 3629100003) owned by SHI OHM P L and 509 50th St. W., (PID 3629000005) owned by ZEEVA RE, LLC are requesting annexation into the City of Bradenton. Along with this request, they are additionally requesting the zoning of the two parcels to be Suburban Commercial Corridorl (SCC) and that they be given a Future Land Use Map designation of Suburban Commercial Corridor (SCC).

Attached with this letter are applications for same along with required documentation to include description sketch, boundary surveys, owners affidavits and justifications.

Respectfully submitted,
Gause and Associates, Inc.

Robert C. Gause
President

323 10th Ave. W., Suite 102., Palmetto, Florida 34221 | Ph. 941.713.0782 | LA000942 | email: [redacted]

COMMUNITY IMPACT REPORT FOR 507 & 509 50TH ST. W.

As part of the annexation process, the two parcels require an amendment to the City of Bradenton's Comprehensive Plan Future Land Use map because the parcels will require a Future Land Use to be assigned to them. The applicant is requesting that the two parcels located at 507 50th St. W. (PID 3629100003) owned by SHI OHM P L and) and 509 50th St. W. (PID3629000005) owned by ZEEVA RE, LLC. be changed from Manatee County Future Land Use designation-ROR and RES-6 to Professional (P). As justification, we offer the following Community Impact Report findings.

A. VISUAL IMPACT ANALYSIS - The subject parcels currently contain a medical office and a single family residence that is used as both a vacation rental and a realtors office. Improvements to the professional offices would comply with all City of Bradenton screening requirements. Additionally, the location adjacent to the professional uses along Manatee Avenue would not create a visual impact to the neighborhood.
B. LAND USE ASSESSMENT – The subject parcels are already used for nonresidential/semi-nonresidential uses. One parcel already has a Retail/Office/Residential (ROR) land use designation, and the other parcel has a Res-6 designation which allows for medium density residential, Neighborhood Commercial, Public /semi-public recreation and schools on it.
C. TRAFFIC STUDY – The parcels already have existing non-residential uses on them and already contain an ROR and RES-6 Future Land Use designation. The ROR allows up to 16 du/ac and an intensity of up to 1 FAR for mixed use. The RES-6 designation allows for a density of up to 12 du/ac if mixed use and an intensity of 0.35 FAR. The combined existing average allowable density is 14 du/ac and the existing combined intensity is 0.675 FAR. By comparison the City of Bradentons SCC Future Land Use designation does not allow for residential density and a maximum intensity of 0.5 FAR. There is no expected impact to traffic because of the requested change.
D. ENVIRONMENTAL IMPACT ASSESSMENT – The subject parcels are both currently developed urban developments with no wetlands or listed species utilization. No environmental impact is anticipated as a result of the requested changes.
E. AREA IMPACT ASSESSMENT – The requested change is not expected to have any adverse impacts on the area. The proposed changes in Future Land Use designation is the least intense designation that allows the continued use of the property for non-residential uses.
F. HURRICANE EVACUATION ANALYSIS – The proposed Future Land Use designations will not adversely impact hurricane evacuations. The intended uses are non-residential which generally means they will not need to be evacuated during a hurricane.

In summary, the proposed request appears to have limited impacts on the community.

CLEMENTS SURVEYING, INC.
509 8th Avenue West, Ste. 140
Palmetto, Florida 34221
Phone: 729-6690

MEMBER OF:
Florida Society Of Professional Surveyors & Mappers
Manatee County Chamber of Commerce
Manasota Chapter Of Professional Surveyors & Mappers

SITE LOCATED IN:
SECTION 28-34S-17E
MANATEE COUNTY, FLORIDA
EXHIBIT A

SKETCH OF DESCRIPTION
(NOT A FIELD SURVEY)
SHEET 1 OF 1

LEGEND
(D)=DEED
(C)=COMPUTED
(M)=MEASURED
(P)=PLAT
C.M.F.=CONCRETE MONUMENT
I.P.F.=IRON PIPE FOUND
I.R.F.=IRON ROD FOUND
I.R.S.=IRON ROD SET
L.B.=LICENSED BUSINESS
P.B.=PLAT BOOK
P.G.=PAGE
P.O.C.=POINT OF COMMENCEMENT
P.O.B.=POINT OF BEGINNING
O.R.B=OFFICIAL RECORDS BOOK
R/W=RIGHT-OF-WAY
P.S.M.=PROFESSIONAL SURVEYOR & MAPPER
<>=NOT TO SCALE

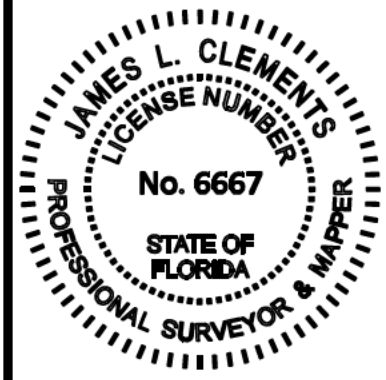

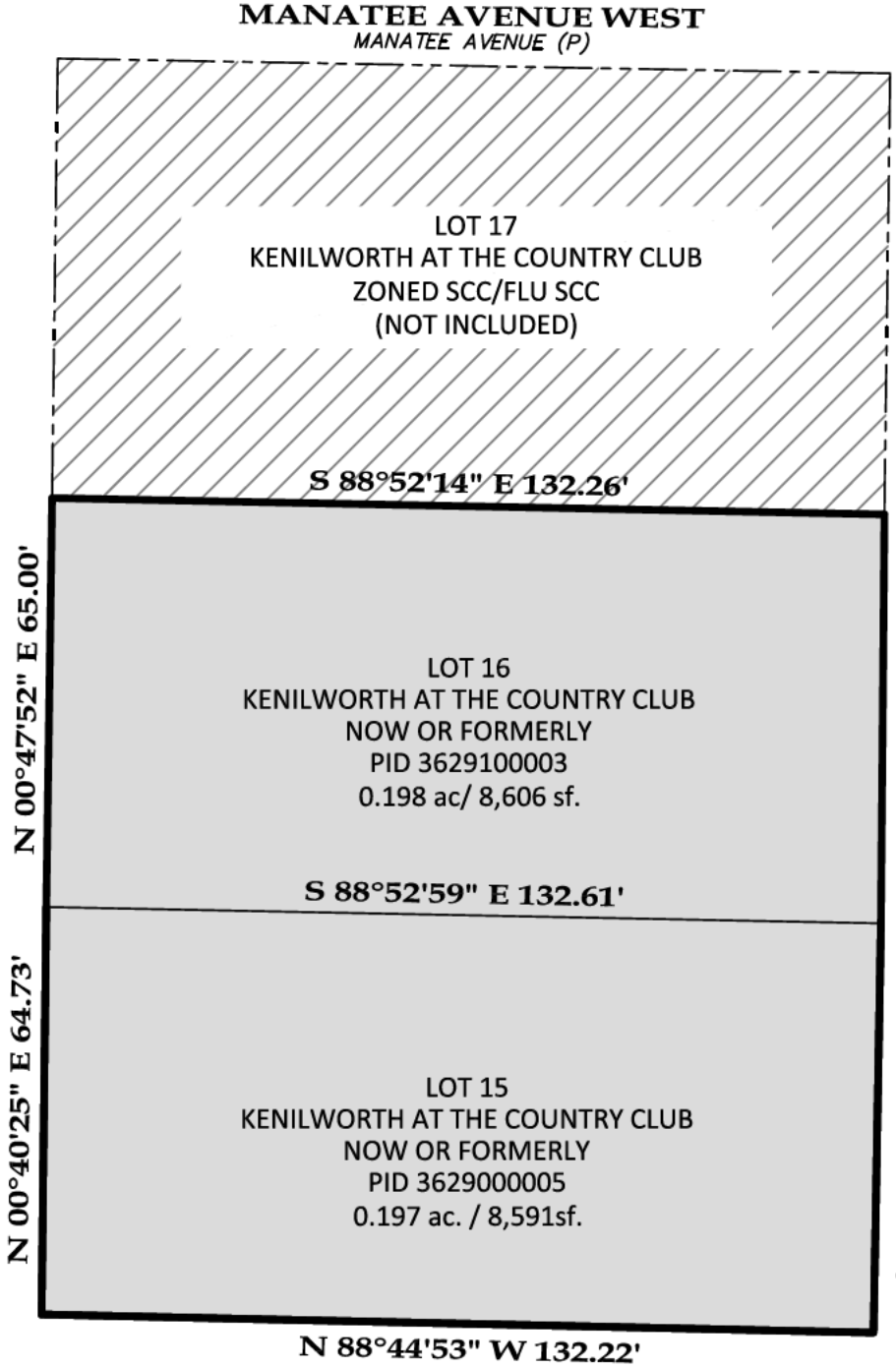

DESCRIPTION:
LOTS 15 AND 16, KENILWORTH, AS PER PLAT THEREOF RECORDED IN PLAT BOOK 3, PAGE 25, OF THE PUBLIC RECORDS OF MANATEE COUNTY, FLORIDA.

NOTES:
BEARINGS ARE BASED ON THE EASTERLY RIGHT-OF-WAY OF 50TH STREET WEST BEING N00°39'33"E (GRID), UTILIZING THE FLORIDA PERMANENT REFERENCE NETWORK (FLORIDA WEST ZONE).

COORDINATES SHOWN OBTAINED USING A TRIMBLE NETWORK ROVER UTILIZING THE FLORIDA PERMANENT REFERENCE NETWORK (FLORIDA WEST ZONE).

Job No. 2025-485
Boundary _____ FB _____ PG _____
Foundation _____ FB _____ PG _____
Final _____ FB _____ PG _____
Sketch 02-20-2026 FB _____ PG _____
Drawn By JMD

BY: James L Clements
JAMES L. CLEMENTS, P.S.M. # 4091
Licensed Business No. 6667
DATE OF CERTIFICATION 02-20-2026

0 30 60

bradenton
The Friendly City

Agent Authorization Form

Department of Planning & Community Development
101 Old Main Street, Bradenton, FL 34205
Ph: (941) 932-9400
www.cityofbradenton.com

PLANNING & ZONING AGENT AUTHORIZATION FORM

Property Address: 507 50th ST W Bradenton, FL 34209

I, Nishith patel, SHIV OHM pl, the registered property owner(s) of the above noted property, do hereby authorize

Robert Gause — Print Name of Agent

Gause and Associates, Inc — Company Name

to act on my behalf and take all actions necessary for the processing, issuance and acceptance of this permit or certification and any and all standards and conditions applicable.

AGENT AUTHORIZATION — REQUIRED

Signature of Owner(s)

5637 clearwater COURT, Lakewood Ranch 34211
Owner(s) Address (if different than property above)

Signature of Agent

Agent Address and Phone

STATE OF FLORIDA, MANATEE COUNTY

The Foregoing instrument was acknowledged before me by means of X physical presence or online notarization, this 13th day of Oct 2025, produced [redacted] respectively, as identification and who did (did not) take an oath:

NOTARY — REQUIRED

Signature

AAKASH PATEL, Notary Public
Print Name

State of Florida
My Commission Expires: 07/27/28

AAKASH PATEL
NOTARY PUBLIC
MY COMMISSION EXPIRES 7-27-2028
STATE OF FLORIDA
COMMISSION NUMBER HH 526937

Zoning Atlas Amendment Application

Department of Planning & Community Development
101 Old Main Street, Bradenton, FL 34205
Ph: (941) 932-9400
www.cityofbradenton.com

DISCLOSURE AFFIDAVIT — REQUIRED

The City of Bradenton Land Use Regulations adopted as Ordinance No. 2627, and amended under Ordinance No. 2926 requires that all applications for Land Use Atlas Amendments shall include public disclosure of applicants and their percentage of interest.

If the subject property is owned by:

A CORPORATION, list the principal officers, principal stockholders, and the percentage of stock owned by each; or

A TRUSTEE, list the beneficiaries of the trust with percentage of interest; or

A PARTNERSHIP or LIMITED PARTNERSHIP, list the name of the principals including general and limited partners; and

If there is a CONTRACT FOR PURCHASE, whether contingent on this application or not, and whether a Corporation, Trustee, or Partnership, list the names of the contract purchasers below, including the principal officers, stockholders, beneficiaries, or partners. If any contingency clause or contract terms involve additional parties, list all individuals or officers if a corporation, trust, or partnership. This is in addition to the list of owners.

NOTE: 1) *Changes of ownership or changes in contracts for purchase subsequent to the date of the application, but prior to the date of final public hearing, a supplemental Disclosure of Interest shall be filed. 2) Disclosure shall not be required of any entity whose interests is solely equity interest which are traded on an established securities market in the United States or another country.*

NAME, ADDRESS, TITLE	PERCENTAGE INTEREST, STOCK, OR OWNERSHIP
Nishith Patel 5637 clearwater court , FL , 342 Mgı (owner ___ contract purchaser ___)	100 % Owner Shiv Ohm PL
_____ (owner ___ contract purchaser ___)	_____
_____ (owner ___ contract purchaser ___)	_____

Under penalties of perjury, I declare that I have read the foregoing affidavit and that the facts stated in it are true.

Signature: _____ (Applicant): Nishith Patel (Shiv Ohm Pl)

NOTARY — REQUIRED

STATE OF FLORIDA
COUNTY OF Manatee

The foregoing instrument was sworn to (or affirmed) and subscribed before me this 16th day of Feb, 2026, by Nishith Patel, who is personally known to me or who has produced [redacted] as identification.

A. O. Patel
Signature

AAKASH PATEL, Notary Public
Print Name

State of Florida – My Commission Expires: 07/27/28

AAKASH PATEL
NOTARY PUBLIC
MY COMMISSION
EXPIRES 7-27-2028
STATE OF FLORIDA
COMMISSION NUMBER HH 526937

Zoning Atlas Amendment Application

Department of Planning & Community Development
101 Old Main Street, Bradenton, FL 34205
Ph: (941) 932-9400
www.cityofbradenton.com

DISCLOSURE AFFIDAVIT — REQUIRED

The City of Bradenton Land Use Regulations adopted as Ordinance No. 2627, and amended under Ordinance No. 2926 requires that all applications for Land Use Atlas Amendments shall include public disclosure of applicants and their percentage of interest.

If the subject property is owned by:

A CORPORATION, list the principal officers, principal stockholders, and the percentage of stock owned by each; or

A TRUSTEE, list the beneficiaries of the trust with percentage of interest; or

A PARTNERSHIP or LIMITED PARTNERSHIP, list the name of the principals including general and limited partners; and

If there is a CONTRACT FOR PURCHASE, whether contingent on this application or not, and whether a Corporation, Trustee, or Partnership, list the names of the contract purchasers below, including the principal officers, stockholders, beneficiaries, or partners. If any contingency clause or contract terms involve additional parties, list all individuals or officers if a corporation, trust, or partnership. This is in addition to the list of owners.

NOTE: 1) *Changes of ownership or changes in contracts for purchase subsequent to the date of the application, but prior to the date of final public hearing, a supplemental Disclosure of Interest shall be filed. 2) Disclosure shall not be required of any entity whose interests is solely equity interest which are traded on an established securities market in the United States or another country.*

NAME, ADDRESS, TITLE	PERCENTAGE INTEREST, STOCK, OR OWNERSHIP
Rachna Patel 5637 clearwater court , FL, 34211 Mgr	100 % owner Zeeva Re LLC
(owner ___ contract purchaser ___)	
(owner ___ contract purchaser ___)	
(owner ___ contract purchaser ___)	

Under penalties of perjury, I declare that I have read the foregoing affidavit and that the facts stated in it are true.

Signature: _____ (Applicant): Rachna Patel (Zeeva Re LLC)

NOTARY — REQUIRED

STATE OF FLORIDA
COUNTY OF Manatee

The foregoing instrument was sworn to (or affirmed) and subscribed before me this 16th day of Feb, 2026, by RACHNA PATEL, who is personally known to me or who has produced [redacted] identification.

AAKASH PATEL
NOTARY PUBLIC
MY COMMISSION EXPIRES 7-27-2028
STATE OF FLORIDA
COMMISSION NUMBER HH 526937

Signature

AAKASH PATEL, Notary Public
Print Name

State of Florida – My Commission Expires: 07/27/28

Agent Authorization Form

Department of Planning & Community Development
101 Old Main Street, Bradenton, FL 34205
Ph: (941) 932-9400
www.cityofbradenton.com

bradenton
The Friendly City

PLANNING & ZONING AGENT AUTHORIZATION FORM

Property Address: 507 50th ST W Bradenton, FL 34209

I, Nishith patel, SHIV OHM pl, the registered property owner(s) of the above noted property, do hereby authorize

Robert Gause — Print Name of Agent

Gause and Associates, Inc — Company Name

to act on my behalf and take all actions necessary for the processing, issuance and acceptance of this permit or certification and any and all standards and conditions applicable.

AGENT AUTHORIZATION — REQUIRED

Signature of Owner(s)

5637 clearwater COURT, Lakewood Ranch 34211
Owner(s) Address (if different than property above)

Signature of Agent

Agent Address and Phone

STATE OF FLORIDA, MANATEE COUNTY

The Foregoing instrument was acknowledged before me by means of X physical presence or online notarization, this 13th day of Oct 2025, produced [redacted] respectively, as identification and who did (did not) take an oath:

NOTARY — REQUIRED

Signature

AAKASH PATEL, Notary Public
Print Name

State of Florida
My Commission Expires: 07/27/28

AAKASH PATEL
NOTARY PUBLIC
MY COMMISSION EXPIRES 7-27-2028
STATE OF FLORIDA
COMMISSION NUMBER HH 526937

AGENDA ITEM NO. 7.b

Item Cover Page

CITY COUNCIL MEETING AGENDA ITEM REPORT

DATE: May 27, 2026

SUBMITTED BY: Jamie Schindewolf, Planning & Community Development

ITEM TYPE: Ordinance

AGENDA SECTION: BUSINESS/ADVERTISING, PETITIONS, HEARINGS & COMMUNICATIONS

SUBJECT: ORDINANCE 4074 - SECOND READING AND PUBLIC HEARING
AN ORDINANCE OF THE CITY OF BRADENTON, FLORIDA, PROVIDING FOR AN AMENDMENT TO THE CITY OF BRADENTON LAND USE ATLAS; TO DESIGNATE CERTAIN LAND GENERALLY LOCATED EAST OF 50TH STREET WEST AND 70 FEET SOUTH OF MANATEE AVE WEST, IDENTIFIED AS PARCEL ID 3629100003 AND 3629000005, AND MORE PARTICULARLY DESCRIBED HEREIN, CONTAINING APPROXIMATELY 0.397 ACRES AND OWNED BY SHIV OHM P L AND ZEEVA RE LLC, RESPECTIVELY, UNDER THE SUBURBAN COMMERCIAL CORRIDOR ZONING CATEGORY; PROVIDING FOR APPLICABILITY; PROVIDING FOR SEVERABILITY; AND PROVIDING FOR AN EFFECTIVE DATE.

SUGGESTED ACTION: Move to approve or deny Ordinance 4074.

Is this item Quasi-Judicial?
No

Does this item require a public hearing?
Yes

EXPLANATION:
Robert Gause, Agent for Shiv Ohm P l and Zeeva RE LCC has petitioned to annex subject property. The property was annexed under Ordinance 4072 on May 13, 2026. As part of the annexation process, the property must be assigned a future

land use designation (separate application) and a zoning classification under the City of Bradenton regulations.

FINANCIAL IMPACT:
N/A

ATTORNEY REVIEW/RECOMMENDATION:
Reviewed by City Attorney Rudacille.

SUGGESTED MOTION:
Motion to approve or deny Ordinance 4074.

ATTACHMENTS:
Ordinance 4074
Staff Report
Application Materials

ORDINANCE NO. 4074

AN ORDINANCE OF THE CITY OF BRADENTON, FLORIDA, PROVIDING FOR AN AMENDMENT TO THE CITY OF BRADENTON LAND USE ATLAS; TO DESIGNATE CERTAIN LAND GENERALLY LOCATED EAST OF 50TH STREET WEST AND 70 FEET SOUTH OF MANATEE AVE WEST, IDENTIFIED AS PARCEL ID 3629100003 AND 3629000005, AND MORE PARTICULARLY DESCRIBED HEREIN, CONTAINING APPROXIMATELY 0.397 ACRES AND OWNED BY SHIV OHM P L AND ZEEVA RE LLC, RESPECTIVELY, UNDER THE SUBURBAN COMMERCIAL CORRIDOR ZONING CATEGORY; PROVIDING FOR APPLICABILITY; PROVIDING FOR SEVERABILITY; AND PROVIDING FOR AN EFFECTIVE DATE.

WHEREAS, Article VIII, Section 2, Constitution of the State of Florida, as revised in 1968, provides for and establishes municipalities and grants to those municipalities governmental, corporate, and proprietary powers to enable them to conduct municipal government, perform municipal functions, render municipal services, and authorizes said municipalities to exercise any power for municipal purposes, except as otherwise provided by law; and

WHEREAS, Chapter 166, Florida Statutes, The Municipal Home Rule Powers Act, implements by general law the authority and jurisdiction granted to municipalities by the Florida Constitution and establishes home rule for said municipalities; and

WHEREAS, Chapter 163, Florida Statutes, Part II, Local Government Comprehensive Planning/Land Development Regulations, requires, authorizes and empowers municipalities to prepare, adopt, amend and enforce Comprehensive Plans for the development of the City and empowering the City Council of the City of Bradenton to plan for the City's future development and growth in order to responsibly guide the future growth and development of the City, to implement adopted or amended Comprehensive Plans by the adoption of appropriate land development regulations and to establish, support and maintain procedures to carry out the provisions and purposes of said Statute; and

WHEREAS, pursuant to Section 163.3174, Florida Statutes, the City Council of the City of Bradenton duly designated its Planning Commission as the Local Planning Agency (LPA) for the City of Bradenton; and

WHEREAS, the City has adopted land use regulations and a land use atlas in order to implement the goals, objectives, and policies of the

comprehensive plan, and

WHEREAS, the City amends such regulations and atlas from time to time, and has adopted procedures by which to amend these documents, requiring a public hearing before the Planning Commission and City Council; and

WHEREAS, Shiv Ohm, P.L., is the owner of approximately 0.198 acres of real property located at 507 50th Street West (PID# 3629100003)(the "Shiv Ohm Property"); and

WHEREAS, Zeeva RE, LLC, is the owner of approximately 0.198 acres of real property located at 509 50th Street West (PID# 3629000005) (the "Zeeva RE Property"); and

WHEREAS, the Shiv Ohm Property and Zeeva RE Property collectively are legally described and depicted on **Exhibit A**, attached hereto and incorporated herein (the "Property"); and

WHEREAS, Robert Gause, Agent for Zeeva RE, LLC and Shiv Ohm submitted a Zoning Atlas Amendment application to designate the Property, consisting of approximately .397 acres, as SCC, Suburban Commercial Corridor (the "Amendment"); and

WHEREAS, the LPA and the City Council have in preparation of the Amendment to the City's Zoning Atlas performed or caused to be performed, the necessary studies and surveys, the collection of appropriate data, the holding of such public hearings, workshops and meetings, as necessary, and have effectively provided for public participation, notice, and opportunity for oral and written comments; and

WHEREAS, the City of Bradenton's LPA held a public hearing on April 15, 2026, to consider the proposed Amendment; and,

WHEREAS, the LPA having reviewed and considered all comments received during said hearing, found that the Amendment furthers the goals, objectives and policies of the City's Comprehensive Plan and recommended said Amendment to the City Council for approval; and

WHEREAS, based on the matters of record received by the City Council at the required public hearing pursuant to Section 166.041 Florida Statutes, held on May 27, 2026 after proper notice, and finding the proposed Amendment to be consistent with the goals, objectives and policies of the City's Comprehensive Plan, as well as the requirements of Section 3.1.5 of the

City's Land Use Regulations, the City Council, in the exercise of its home rule and statutory authority, has determined it necessary and desirable, in order to protect the public health, safety and welfare, to adopt said Amendment.

NOW, THEREFORE, BE IT ORDAINED BY THE CITY COUNCIL OF THE CITY OF BRADENTON, FLORIDA:

1. The recitals set forth above are true and correct and are hereby adopted as findings of fact by the City Council for the adoption of this Ordinance. Based on such findings the City Council determines that the City of Bradenton Land Use Atlas should be amended as described in Section 2 below.

2. The Zoning Atlas of the City of Bradenton is hereby amended, classifying the Property as SCC, Suburban Commercial Corridor.

3. In the event any provision or portion of this Ordinance is declared by any Court of competent jurisdiction to be void, unconstitutional, or unenforceable, then, and in that event, all remaining provisions and portions of this Ordinance shall remain in full force and effect.

4. This Ordinance shall be contingent upon Ordinance 4072 becoming effective and shall otherwise become effective as provided by Florida law.

PASSED AND DULY ADOPTED BY THE CITY COUNCIL FOR THE CITY OF BRADENTON, FLORIDA, WITH A QUORUM PRESENT AND VOTING ON THIS 27th DAY OF MAY, 2026.

THE CITY OF BRADENTON, BY AND THROUGH THE CITY COUNCIL OF THE CITY OF BRADENTON

ATTEST:

Tamara Melton
CITY CLERK

Gene Brown
MAYOR

APPROVED AS TO FORM:

_____

Scott Rudacille
CITY ATTORNEY

Planning Commission	April 15, 2026
City Council 1st Reading	May 13, 2026
City Council 2nd Reading and Public Hearing	May 27, 2026
Local Planning Agency ad published	April 5, 2026
City Council hearing ad published	May 3, 2026 and May 17, 2026

EXHIBIT A

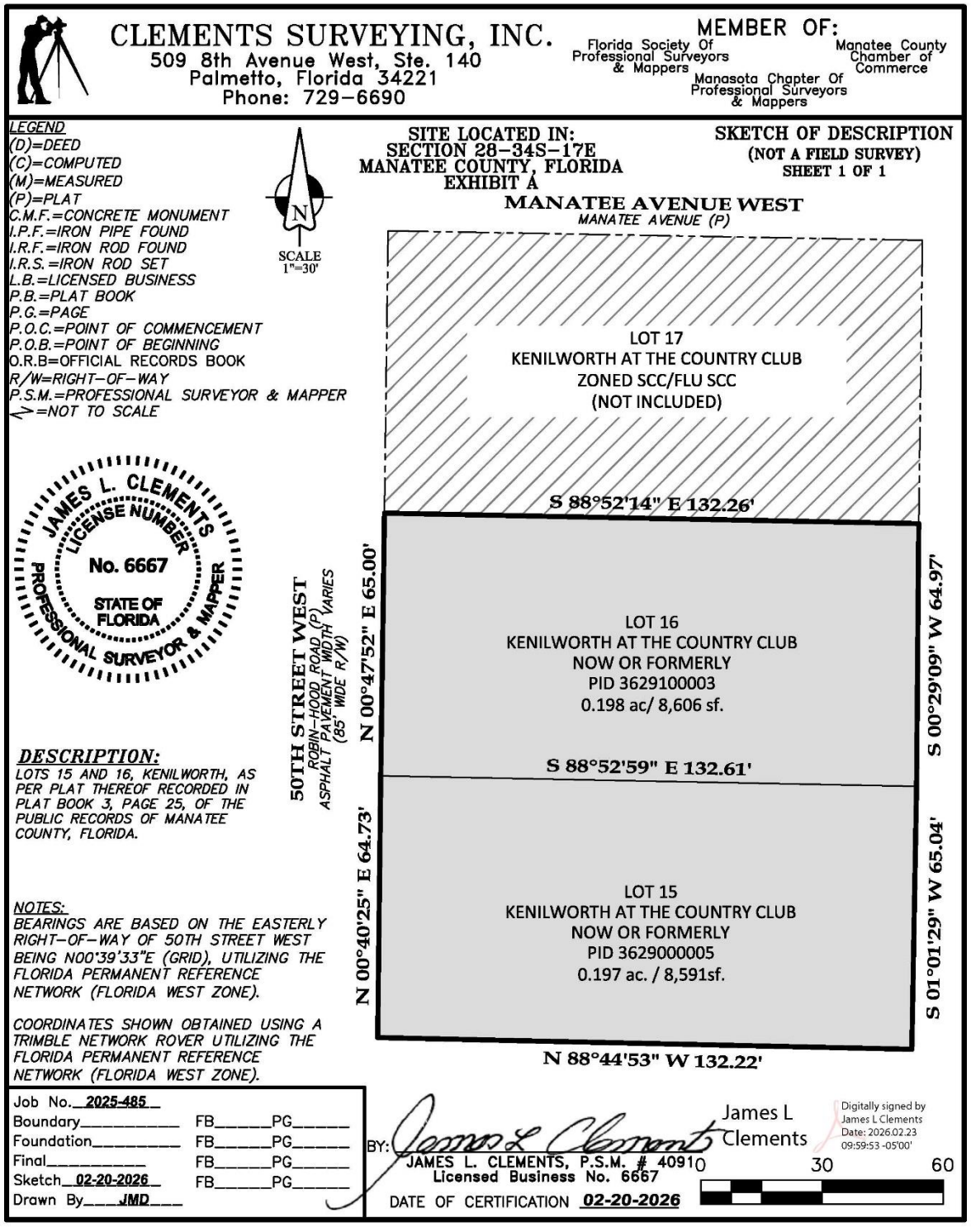
CLEMENTS SURVEYING, INC.
509 8th Avenue West, Ste. 140
Palmetto, Florida 34221
Phone: 729-6690
MEMBER OF:
Florida Society Of Professional Surveyors & Mappers
Manatee County Chamber of Commerce
Manasota Chapter Of Professional Surveyors & Mappers
LEGEND
(D)=DEED
(C)=COMPUTED
(M)=MEASURED
(P)=PLAT
C.M.F.=CONCRETE MONUMENT
I.P.F.=IRON PIPE FOUND
I.R.F.=IRON ROD FOUND
I.R.S.=IRON ROD SET
L.B.=LICENSED BUSINESS
P.B.=PLAT BOOK
P.G.=PAGE
P.O.C.=POINT OF COMMENCEMENT
P.O.B.=POINT OF BEGINNING
O.R.B=OFFICIAL RECORDS BOOK
R/W=RIGHT-OF-WAY
P.S.M.=PROFESSIONAL SURVEYOR & MAPPER
<>=NOT TO SCALE
SCALE 1"=30'
SITE LOCATED IN:
SECTION 28-34S-17E
MANATEE COUNTY, FLORIDA
EXHIBIT A
SKETCH OF DESCRIPTION
(NOT A FIELD SURVEY)
SHEET 1 OF 1
MANATEE AVENUE WEST
MANATEE AVENUE (P)
LOT 17
KENILWORTH AT THE COUNTRY CLUB
ZONED SCC/FLU SCC
(NOT INCLUDED)
S 88°52'14" E 132.26'
LOT 16
KENILWORTH AT THE COUNTRY CLUB
NOW OR FORMERLY
PID 3629100003
0.198 ac/ 8,606 sf.
S 88°52'59" E 132.61'
LOT 15
KENILWORTH AT THE COUNTRY CLUB
NOW OR FORMERLY
PID 3629000005
0.197 ac. / 8,591sf.
N 88°44'53" W 132.22'
50TH STREET WEST
ROBIN-HOOD ROAD (P)
ASPHALT PAVEMENT WIDTH VARIES
(85' WIDE R/W)
N 00°47'52" E 65.00'
N 00°40'25" E 64.73'
S 00°29'09" W 64.97'
S 01°01'29" W 65.04'
JAMES L. CLEMENTS
LICENSE NUMBER
No. 6667
STATE OF FLORIDA
PROFESSIONAL SURVEYOR & MAPPER
DESCRIPTION:
LOTS 15 AND 16, KENILWORTH, AS PER PLAT THEREOF RECORDED IN PLAT BOOK 3, PAGE 25, OF THE PUBLIC RECORDS OF MANATEE COUNTY, FLORIDA.
NOTES:
BEARINGS ARE BASED ON THE EASTERLY RIGHT-OF-WAY OF 50TH STREET WEST BEING N00°39'33"E (GRID), UTILIZING THE FLORIDA PERMANENT REFERENCE NETWORK (FLORIDA WEST ZONE).
COORDINATES SHOWN OBTAINED USING A TRIMBLE NETWORK ROVER UTILIZING THE FLORIDA PERMANENT REFERENCE NETWORK (FLORIDA WEST ZONE).
Job No. 2025-485
Boundary FB PG
Foundation FB PG
Final FB PG
Sketch 02-20-2026 FB PG
Drawn By JMD
BY:
JAMES L. CLEMENTS, P.S.M. # 4091
Licensed Business No. 6667
DATE OF CERTIFICATION 02-20-2026
James L Clements
Digitally signed by James L Clements
Date: 2026.02.23 09:59:53 -05'00'
0 30 60

City of Bradenton
Planning and Community Development Department
City Council Public Hearings
May 13 and 27, 2026

Staff Report

Case Number:	PLN-ZON-26-0001 – ORD 4074
Applicant:	Robert Gause, Agent
Owner:	Shiv Ohm P l and Zeeva RE LCC
Address:	507 50TH ST W and 509 50TH ST W
Parcel ID No:	3629100003 and 3629000005
Current Zoning:	Manatee County PD-M, Professional Medium Office; Manatee County RSF 4.5, Residential Single Family 4.5
Future Land Use:	Manatee County ROR, Retail Office Residential; Manatee County RES-6, Residential 6 DU/AC
Flood Zone:	X

Surrounding Property - Zoning and Future Land Use:

Current Zoning:

North:	City of Bradenton – Suburban Commercial Corridor (SCC)
South:	Manatee County – RSF 4.5
East:	Manatee County - RSF 4.5/PR-M
West:	Manatee County – RSF 4.5/PR-M

Future Land Use:

North:	City of Bradenton – Suburban Commercial Corridor (SCC)
South:	Manatee County – RES-6
East:	Manatee County – RES-6/ROR
West:	Manatee County – RES-6/ROR

SUMMARY OF REQUEST

Robert Gause, Agent for Shiv Ohm P l and Zeeva RE LCC is pursuing an annexation of the subject property. As part of the annexation process, the property must be assigned a future land use designation and a zoning classification under the City of Bradenton regulations. The map below shows the area of the request along with nearby zoning classifications.

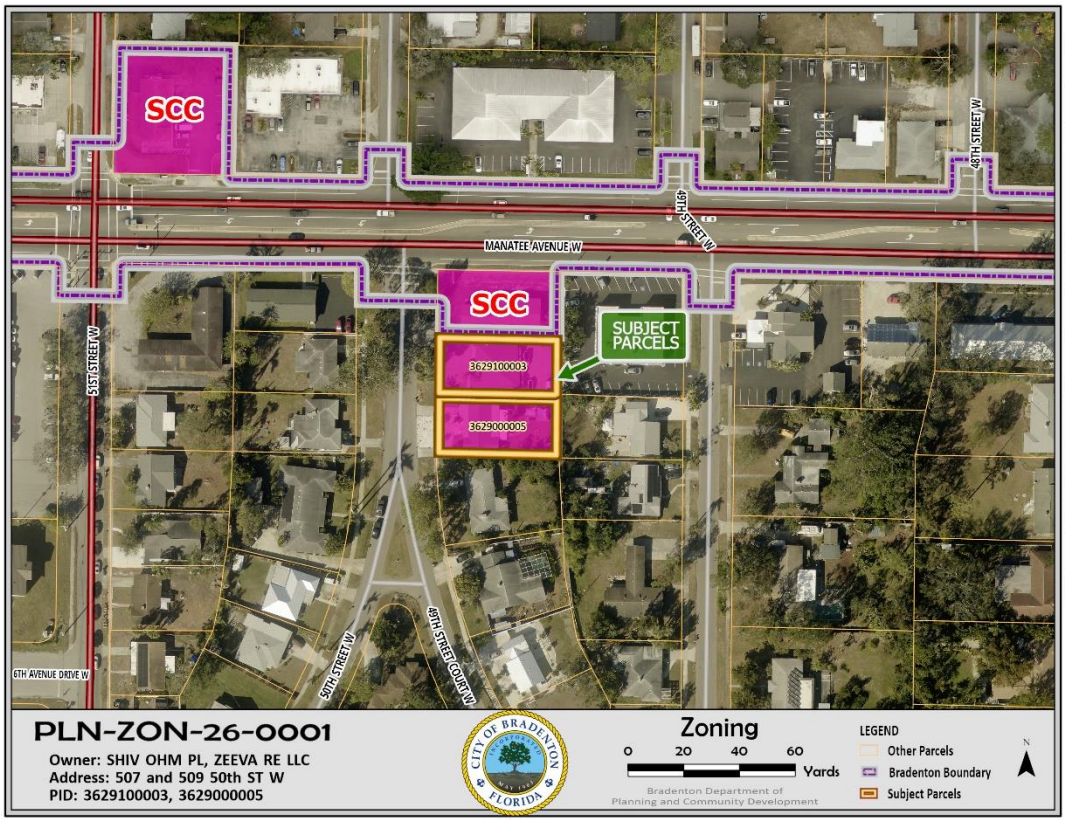

Suburban Commercial Corridor *(Proposed Zoning Classification):*

The Bradenton Land Use Regulations describe the Suburban Commercial Corridor (SCC) zoning district as:

> This district is designed to permit the development of commercial areas along major highways in predominantly developed areas and is intended to meet the needs of motorists and other consumers through the provision of automobile-oriented commercial development.

The following page shows the uses allowed in the Suburban Commercial Corridor district, with those marked under "P" being permitted by right and those marked under "SU" only allowed with Special Use approval from City Council. Mixed Use Residential or Multifamily that sets aside at least 40 percent of its total units as affordable rental units to income-eligible households (at or below 120 percent area median income) for a period of at least 30 years must also be allowed in this zoning category per Florida's "Live Local Act".

Uses allowed in the Suburban Commercial Corridor zoning district from SCHEDULE 3.2.1.2 Permitted and Special Uses:

	P	SU		P	SU
Service Station/Repair		X	Communication Towers*		X
Car Wash		X	Light Manufacturing		X
Auto Sales/Rental	X		Dwelling Unit w/l Principal bldg	X	
Parking Lot/Garage	X		Public Facilities		X
Automotive Specialty	X		Seasonal Sales (2)	X	
Adult Entertainment *		X	Private Events	X	
Indoor		X	Convenience, Grocery, Drugs		X
Outdoor		X	Comparison Goods	X	
Parks		X	Secondhand Stores	X	
Clubs		X	Auction Houses*		X
Public Transportation Terminal	X		Construction Service	X	
Heliports (11)		X	Farm/Marine Supplies		X
Docks and Piers * (4)	X		Laundry/Dry Cleaning Plant		X
Testing Laboratories	X		Wholesale		X
Heating and Fuel		X	Storage Establishments	X	
Ice Plant		X	Plant Nurseries	X	
Building Materials		X	NEWSRACKS, MODULAR *	X	
Restaurants - over 20 seats		X	Personal Service	X	
Shopping Center Restaurants	X		Business/Domestic Service	X	
Lounges		X	Kennels, Animal Boarding		X
Catering	X		Freestanding Ice Vending Machine		X
Take Out/Delivery/Drive Through	X		Schools, Public and Private (9)		X
Café/Sidewalk Café < 20 seats(7)	X		Business, Training Schools	X	
Educational		X	Bed and Breakfast		X
Cultural		X	Boarding Houses*		X
Dormitories	X		Hospitals (11)		X
Religious Establishments (9)	X		Nursing Homes *		X
Cemeteries		X	Health Services	X	
Mortuaries, Funeral Homes, Crematories	X		Group Care Homes (12)		X
Day Care Centers * (8)(9)		X	Group Care Facilities * (12)		X
OFFICES - NON-MEDICAL	X		Social Services Establishment		X
Hotels		X	Veterinarian/Animal Hospital	X	
Motels		X			

* Indicates that there are specific use regulations pertaining to the use (section 4.3).

(1) Outdoor storage and/or display in conjunction with any use is not permitted unless specifically approved by special use permit.
(2) Limited to four per year, maximum two weeks duration each, except Christmas tree lots which are limited to once yearly for 30 days.
(3) Refer to section 3.4.6, special district regulations, for use permissions in the Antique District Overlay.
(4) Docks and piers proposed for public waterfront and those not meeting the criteria in section 5.1.2.14 shall require a special use permit.
(5) Retail establishments providing modeling services require 1,000 square feet per room.
(6) Buildings within 40 feet of a local street abutting a residential land use district must be residential in use and character and oriented to the local street. Neighborhood-serving retail uses may be allowed for corner parcels at local and minor collector street intersections if approved as a planned development project with a positive recommendation from the architectural review board.
(7) City council approval may be required. Refer to sections 2.2.9 and 4.3.1 for alcoholic beverage sales and approval requirements.
(8) Adult and child day care centers with six or less clients and "family day care home" as defined and licensed by HRS [Department of Children and Families] are exempt from zoning requirements.
(9) Day care centers, schools, churches, and other religious establishments can not be located within 500 feet of any adult entertainment establishment.
(10) Permitted use inside the Urban Central Business District Overlay.
(11) Helicopter pads shall be a permitted accessory use to hospitals and public safety facilities.
(12) Shall be a state licensed facility.

FUTURE LAND USE

This application was submitted with a concurrent application to designate the property with the Suburban Commercial Corridor Future Land Use Classification. Suburban Commercial Corridor zoning and Suburban Commercial Corridor future land use are inherently compatible.

ANALYSIS

Land Use Regulations:

The following sections of the Land Use Regulations describe necessary conditions for assigning or amending land use districts in the City. Staff response is in bold below each criterion.:

3.1.5 *Criteria for land use atlas district designations*. Land within the city shall be assigned a land use atlas district designation from the list of standard land use atlas districts in section A. [sections 3.1.1 through 3.1.3] above. The following criteria shall be used to make such assignments and to make changes in assignments, whether initiated by the city or by a property owner pursuant to section 2.2.5 land use atlas amendment.

3.1.5.1 *Consistency with the comprehensive plan.* All land use atlas district assignments shall be consistent with the comprehensive plan, including the future land use map and future land use element goals, objectives and policies. The land use atlas district assigned shall be consistent with the land use category of the future land use map.

The Suburban Commercial Corridor zoning category is consistent with the Suburban Commercial Corridor future land use category, which is the proposed future land use category for this property along with the annexation.

3.1.5.2 *Land use compatibility.* The assigning of land use atlas districts shall promote the compatibility of adjacent land uses.

Designating these properties as Suburban Commercial Corridor is consistent with the designation of adjacent property that is already under the City's jurisdiction. Granting this designation would extend the existing SCC zoning slightly south and along the intersection of Manatee Avenue West and 50th Street West.

3.1.5.3 *Adequate public facilities*. The assigning of land use atlas districts shall be consistent with the public facilities available to set the types of uses allowed in the proposed zoning district. The level of service standards set forth in section 4.1.1.5 shall be considered in assigning land use atlas districts and there shall be reasonable assurance that the demand for services allowed in the proposed land use atlas district can be met.

The project went before the Development Review Committee on December 2, 2025. Public Works commented:

As the property to the north has already been annexed into the City, Public Works would have no objection.

A utility agreement will need to be provided from Manatee County. Changes to utility connections will require site plan approval by Manatee County. The provision of services will be confirmed in the development review process as any potential projects move forward.

3.1.5.4 *Public interest*. Land use atlas district designations shall not be in conflict with the public interest and will promote the public health, safety and welfare.

Designating these lands under the Suburban Commercial Corridor zoning category does not conflict with the public interest. The property is in an area with a mixture of residential and low intensity office and commercial type uses.

3.1.5.5 *Consistency with LURs.* Land use atlas district designations shall be consistent with the purpose and intent of these LURs.

Because the intended future uses are those that fall under permitted per the use schedule in the Land Use Regulations, this designation is consistent with the purpose and intent of the LURs.

Overall, it appears that SCC is a reasonable zoning classification given the adjacent City classification. SCC zoning is highly compatible with SCC Future Land Use, which has also been requested.

On April 15, 2026, the Planning Commission voted unanimously to recommend approval.

Respectfully submitted,

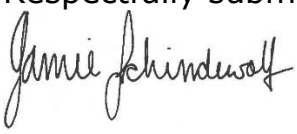

Jamie Schindewolf
Senior Planner

EXHIBIT A: Legal Description
EXHIBIT B: Location Map
EXHIBIT C: Future Land Use Map (Current)
EXHIBIT D: Zoning Map

EXHIBIT A

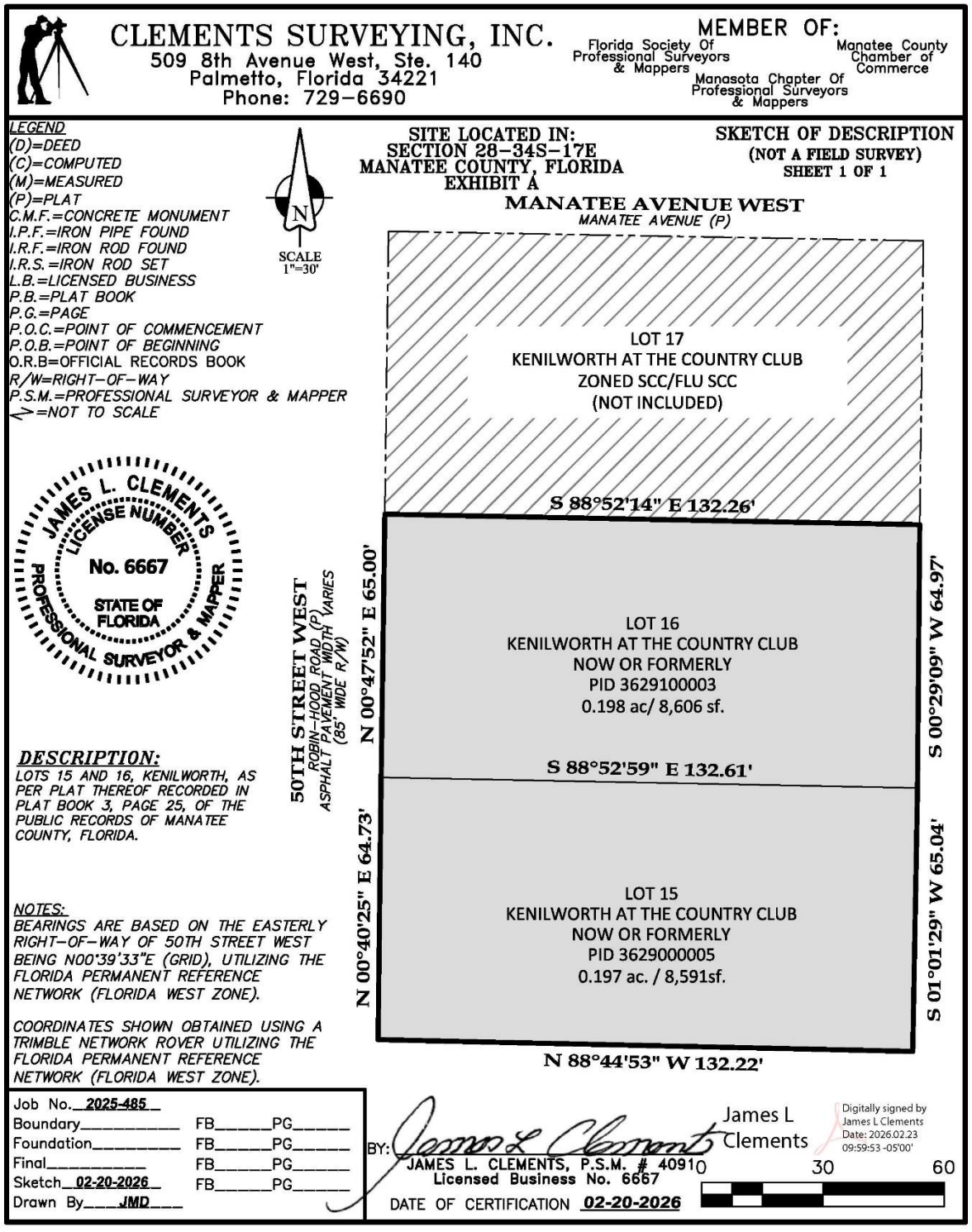

EXHIBIT B

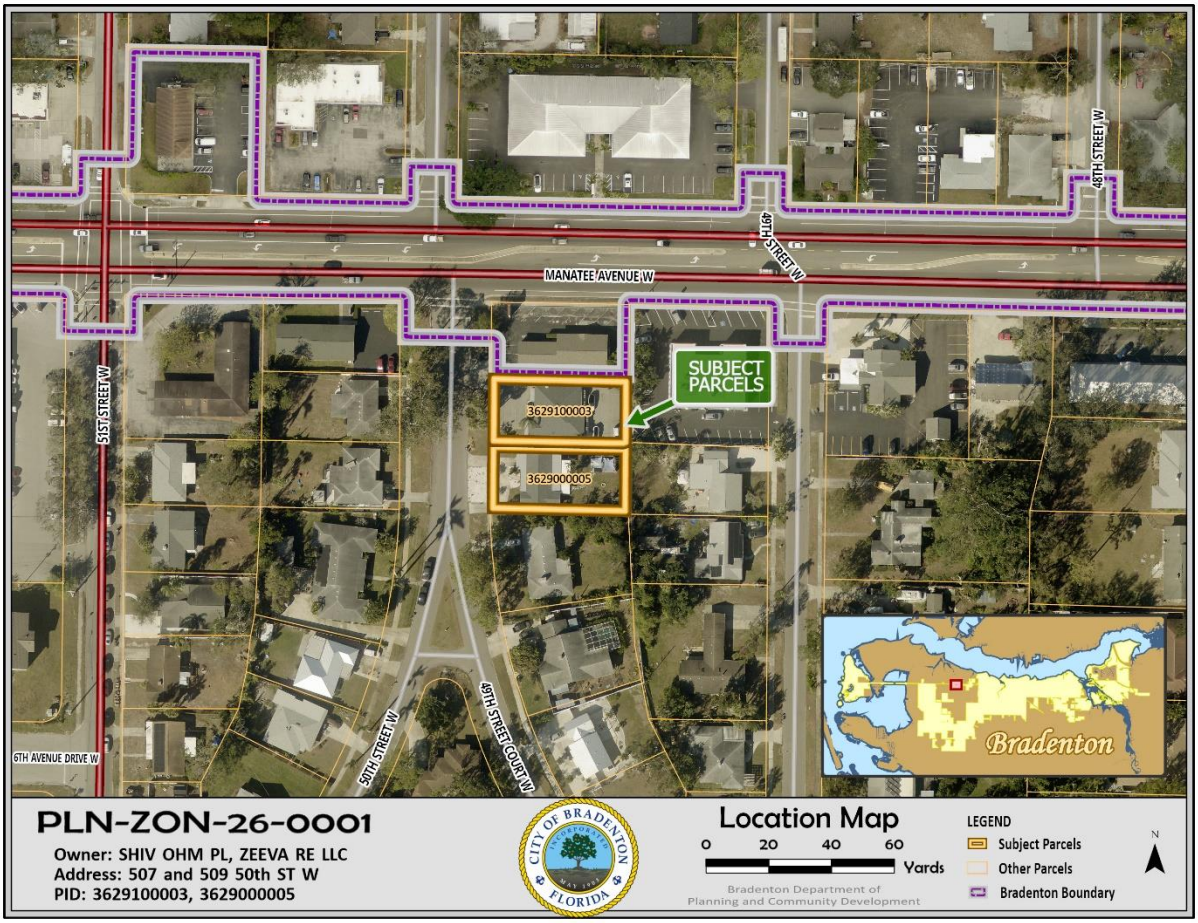
MANATEE AVENUE W
48TH STREET W
49TH STREET W
51ST STREET W
SUBJECT PARCELS
3629100003
3629000005
6TH AVENUE DRIVE W
50TH STREET W
49TH STREET COURT W
Bradenton
PLN-ZON-26-0001
Owner: SHIV OHM PL, ZEEVA RE LLC
Address: 507 and 509 50th ST W
PID: 3629100003, 3629000005
CITY OF BRADENTON FLORIDA
Location Map
0 20 40 60
Yards
Bradenton Department of Planning and Community Development
LEGEND
Subject Parcels
Other Parcels
Bradenton Boundary
N

EXHIBIT C

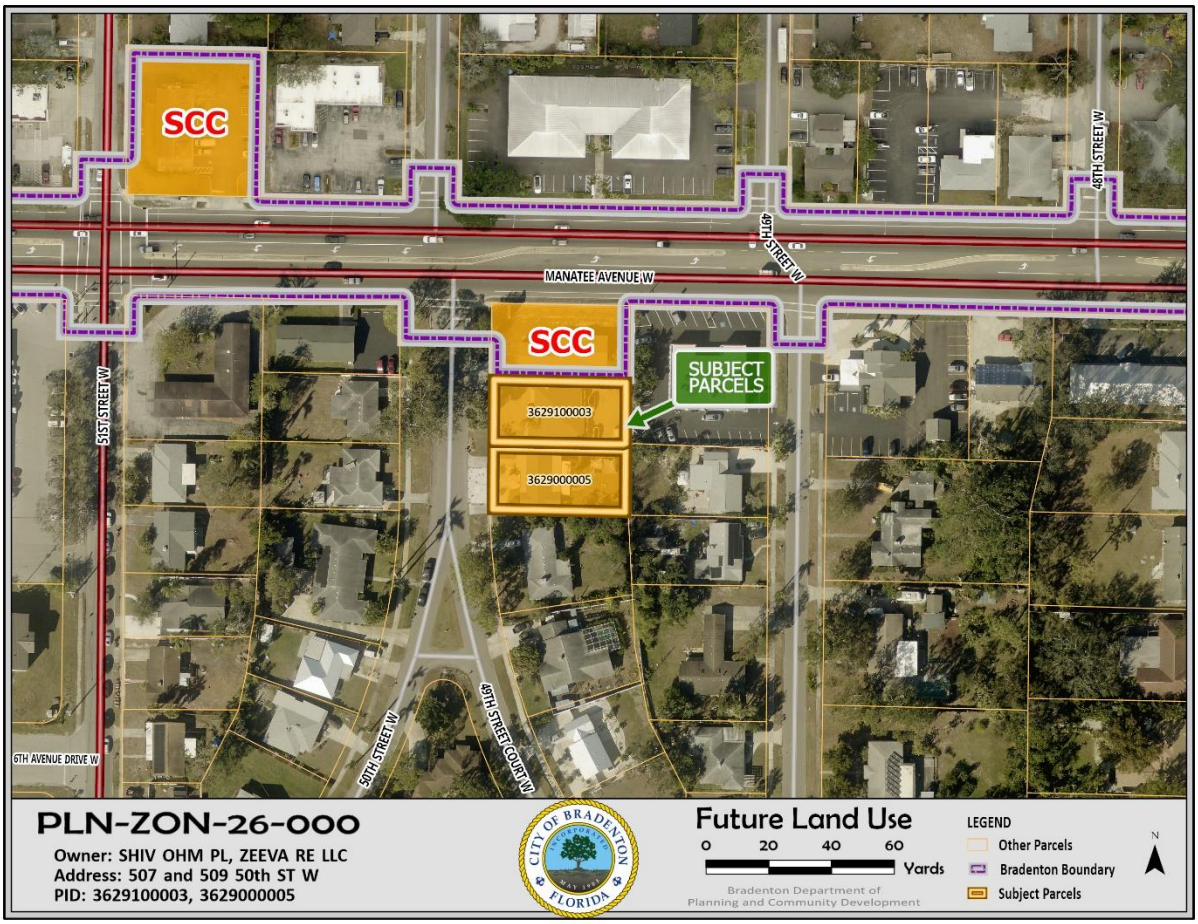
SCC
SCC
MANATEE AVENUE W
49TH STREET W
48TH STREET W
51ST STREET W
SUBJECT PARCELS
3629100003
3629000005
6TH AVENUE DRIVE W
50TH STREET W
49TH STREET COURT W
PLN-ZON-26-000
Owner: SHIV OHM PL, ZEEVA RE LLC
Address: 507 and 509 50th ST W
PID: 3629100003, 3629000005
CITY OF BRADENTON
FLORIDA
Future Land Use
0 20 40 60
Yards
Bradenton Department of
Planning and Community Development
LEGEND
Other Parcels
Bradenton Boundary
Subject Parcels
N

EXHIBIT D

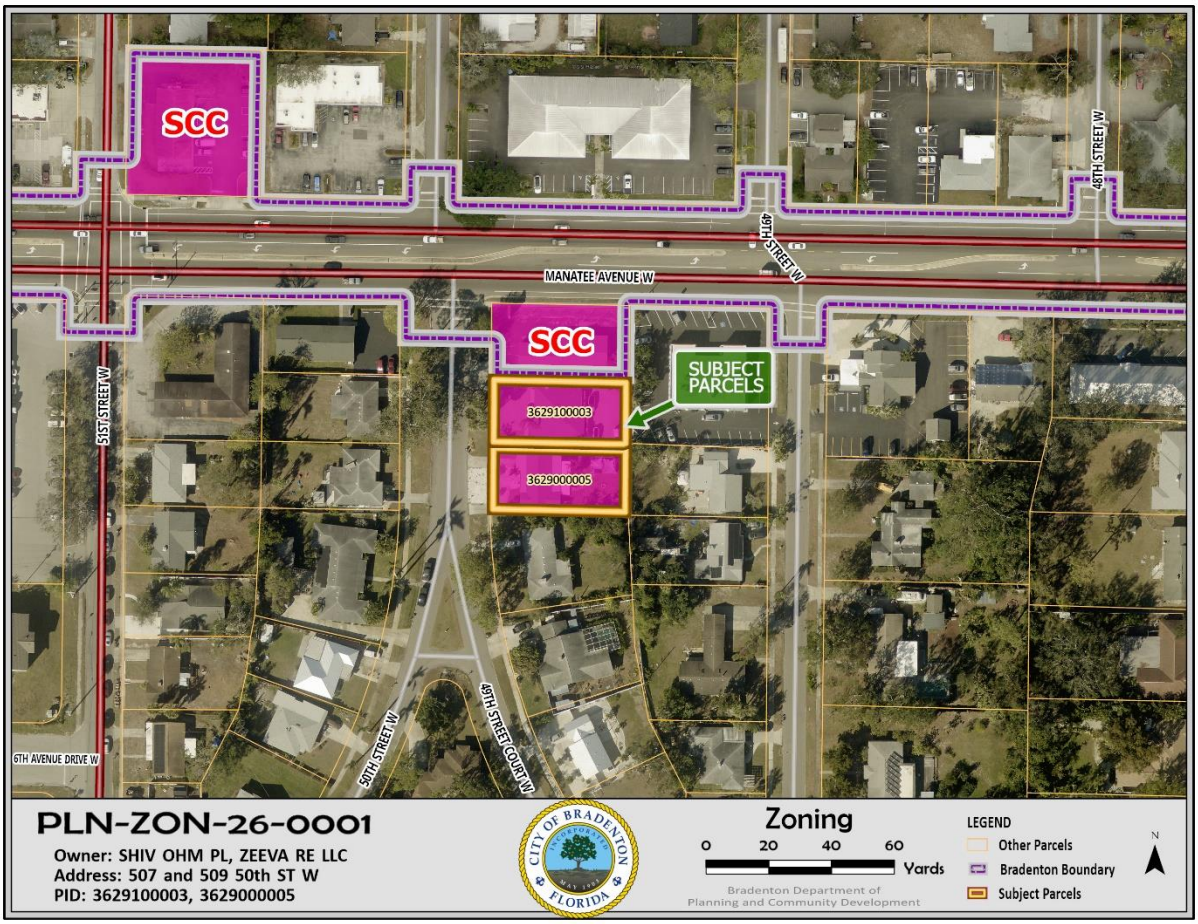
SCC
SCC
MANATEE AVENUE W
49TH STREET W
48TH STREET W
51ST STREET W
SUBJECT PARCELS
3629100003
3629000005
6TH AVENUE DRIVE W
50TH STREET W
49TH STREET COURT W
PLN-ZON-26-0001
Owner: SHIV OHM PL, ZEEVA RE LLC
Address: 507 and 509 50th ST W
PID: 3629100003, 3629000005
CITY OF BRADENTON
FLORIDA
Zoning
0 20 40 60
Yards
Bradenton Department of
Planning and Community Development
LEGEND
Other Parcels
Bradenton Boundary
Subject Parcels
N

Gause and Associates, Inc.

Landscape Architecture

Land Planning

Project Management

Environmental

Irrigation Design

Consulting Arborist

March 3, 2026

City of Bradenton Planning Dept.

101 Old Main St.

Bradenton, Fl. 342025

RE: 507 & 509 50th St. W. Annexation, Rezoning and Comp Plan Map Amendment change

Dear Sirs/Madams,

The owners of the parcels located at 507 50th St. W. (PID 3629100003) owned by SHI OHM P L and 509 50th St. W., (PID 3629000005) owned by ZEEVA RE, LLC are requesting annexation into the City of Bradenton. Along with this request, they are additionally requesting the zoning of the two parcels to be Suburban Commercial Corridor (SCC) and that they be given a Future Land Use Map designation of Suburban Commercial Corridor (SCC).

Attached with this letter are applications for same along with required documentation to include description sketch, boundary surveys, owner's affidavits and justifications.

Respectfully submitted,
Gause and Associates, Inc.

Robert C. Gause
President

323 10th Ave. W., Suite 102., Palmetto, Florida 34221 | Ph. 941.713.0782 | LA000942 | email: [redacted]

ZONING JUSTIFICATION

As part of the annexation process, the two parcels shall require an amendment to the City of Bradenton's Zoning Atlas because the parcels will require zoning to be assigned to them. The applicant is requesting that the two parcels located at 507 50th St. W. (PID 3629100003) owned by SHI OHM P L and) and 509 50th St. W. (PID3629000005) owned by ZEEVA RE, LLC. be changed from Manatee County zoning designation- PR-M and RSF-4.5 to Suburban Commercial Corridor (SCC) As justification, we offer the following.

A. CONSISTENCY WITH THE COMPREHENSIVE PLAN

The subject parcels are consistent with the comprehensive plan. Specifically the following objectives and policies:

Policy 1.7.6 – Public Facilities Efficiency – Per discussions with staff, the properties would remain services by Manatee County utilities as part of the annexation. This would eliminate the need to expand City of Bradenton utilities. The applicant would obtain a utility agreement from Manatee County.as part of any site plan approval.

Policy 1.12.1 – Encourage Infill Development – The requested rezoning supports infill development where an existing professional office and a residence used for real estate services currently exist. The rezoning will allow redevelopment of the two parcels to create a more cohesive professional development.

B. LAND USE COMPATIBILITY

The subject parcels are consistent with the Lande Use Regulation Zoning Districts and will promote the compatibility of adjacent land uses. The subject parcels are already existing non-residential uses and a single-family office/rental facility. The land use to the north is medical office. The land use to the east is also medical office with a single-family residential use located in the County. To the south, is single family residential. The conversion of the south parcel to Suburban Commercial Corridor will allow the redevelopment of the two lots into a new two-story professional facility to replace the existing two buildings currently on the sites.

CLEMENTS SURVEYING, INC.

509 8th Avenue West, Ste. 140
Palmetto, Florida 34221
Phone: 729-6690

MEMBER OF:
Florida Society Of Professional Surveyors & Mappers
Manatee County Chamber of Commerce
Manasota Chapter Of Professional Surveyors & Mappers

SITE LOCATED IN:
SECTION 28-34S-17E
MANATEE COUNTY, FLORIDA
EXHIBIT A

SKETCH OF DESCRIPTION
(NOT A FIELD SURVEY)
SHEET 1 OF 1

LEGEND
(D)=DEED
(C)=COMPUTED
(M)=MEASURED
(P)=PLAT
C.M.F.=CONCRETE MONUMENT
I.P.F.=IRON PIPE FOUND
I.R.F.=IRON ROD FOUND
I.R.S.=IRON ROD SET
L.B.=LICENSED BUSINESS
P.B.=PLAT BOOK
P.G.=PAGE
P.O.C.=POINT OF COMMENCEMENT
P.O.B.=POINT OF BEGINNING
O.R.B=OFFICIAL RECORDS BOOK
R/W=RIGHT-OF-WAY
P.S.M.=PROFESSIONAL SURVEYOR & MAPPER
<>=NOT TO SCALE

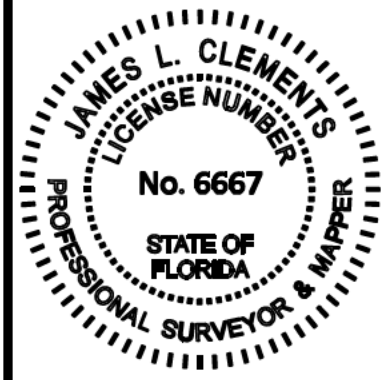

MANATEE AVENUE WEST
MANATEE AVENUE (P)

LOT 17
KENILWORTH AT THE COUNTRY CLUB
ZONED SCC/FLU SCC
(NOT INCLUDED)

S 88°52'14" E 132.26'

50TH STREET WEST
ROBIN-HOOD ROAD (P)
ASPHALT PAVEMENT WIDTH VARIES
(85' WIDE R/W)

N 00°47'52" E 65.00'

LOT 16
KENILWORTH AT THE COUNTRY CLUB
NOW OR FORMERLY
PID 3629100003
0.198 ac/ 8,606 sf.

S 88°52'59" E 132.61'

N 00°40'25" E 64.73'

LOT 15
KENILWORTH AT THE COUNTRY CLUB
NOW OR FORMERLY
PID 3629000005
0.197 ac. / 8,591sf.

S 00°29'09" W 64.97'

S 01°01'29" W 65.04'

N 88°44'53" W 132.22'

DESCRIPTION:
LOTS 15 AND 16, KENILWORTH, AS PER PLAT THEREOF RECORDED IN PLAT BOOK 3, PAGE 25, OF THE PUBLIC RECORDS OF MANATEE COUNTY, FLORIDA.

NOTES:
BEARINGS ARE BASED ON THE EASTERLY RIGHT-OF-WAY OF 50TH STREET WEST BEING N00°39'33"E (GRID), UTILIZING THE FLORIDA PERMANENT REFERENCE NETWORK (FLORIDA WEST ZONE).

COORDINATES SHOWN OBTAINED USING A TRIMBLE NETWORK ROVER UTILIZING THE FLORIDA PERMANENT REFERENCE NETWORK (FLORIDA WEST ZONE).

Job No. 2025-485
Boundary _____ FB _____ PG _____
Foundation _____ FB _____ PG _____
Final _____ FB _____ PG _____
Sketch 02-20-2026 FB _____ PG _____
Drawn By JMD

BY: James L Clements
JAMES L. CLEMENTS, P.S.M. # 4091
Licensed Business No. 6667
DATE OF CERTIFICATION 02-20-2026

0 30 60

Agent Authorization Form

Department of Planning & Community Development
101 Old Main Street, Bradenton, FL 34205
Ph: (941) 932-9400
www.cityofbradenton.com

bradenton
The Friendly City

PLANNING & ZONING AGENT AUTHORIZATION FORM

Property Address: 507 50th ST W Bradenton, FL 34209

I, Nishith patel, SHIV OHM pl, the registered property owner(s) of the above noted property, do hereby authorize

Robert Gause — Print Name of Agent

Gause and Associates, Inc — Company Name

to act on my behalf and take all actions necessary for the processing, issuance and acceptance of this permit or certification and any and all standards and conditions applicable.

AGENT AUTHORIZATION — REQUIRED

Signature of Owner(s)

5637 clearwater COURT, Lakewood Ranch 34211
Owner(s) Address (if different than property above)

Signature of Agent

Agent Address and Phone

STATE OF FLORIDA, MANATEE COUNTY

The Foregoing instrument was acknowledged before me by means of X physical presence or online notarization, this 13th day of Oct 2025, produced [redacted] respectively, as identification and who did (did not) take an oath:

NOTARY — REQUIRED

Signature

AAKASH PATEL, Notary Public
Print Name

State of Florida
My Commission Expires: 07/27/28

AAKASH PATEL
NOTARY PUBLIC
MY COMMISSION EXPIRES 7-27-2028
STATE OF FLORIDA
COMMISSION NUMBER HH 526937

Agent Authorization Form

Department of Planning & Community Development
101 Old Main Street, Bradenton, FL 34205
Ph: (941) 932-9400
www.cityofbradenton.com

bradenton
The Friendly City

PLANNING & ZONING AGENT AUTHORIZATION FORM

Property Address: 507 50th ST W Bradenton, FL 34209

I, Nishith patel, SHIV OHM pl, the registered property owner(s) of the above noted property, do hereby authorize

Robert Gause — Print Name of Agent

Gause and Associates, Inc — Company Name

to act on my behalf and take all actions necessary for the processing, issuance and acceptance of this permit or certification and any and all standards and conditions applicable.

AGENT AUTHORIZATION — REQUIRED

Signature of Owner(s)

5637 clearwater COURT, Lakewood Ranch 34211
Owner(s) Address (if different than property above)

Signature of Agent

Agent Address and Phone

STATE OF FLORIDA, MANATEE COUNTY

The Foregoing instrument was acknowledged before me by means of X physical presence or online notarization, this 13th day of Oct 2025, produced [redacted] respectively, as identification and who did (did not) take an oath:

NOTARY — REQUIRED

Signature

AAKASH PATEL, Notary Public
Print Name

AAKASH PATEL
NOTARY PUBLIC
MY COMMISSION EXPIRES 7-27-2028
STATE OF FLORIDA
COMMISSION NUMBER HH 526937

State of Florida
My Commission Expires: 07/27/28

Zoning Atlas Amendment Application

Department of Planning & Community Development
101 Old Main Street, Bradenton, FL 34205
Ph: (941) 932-9400
www.cityofbradenton.com

DISCLOSURE AFFIDAVIT — REQUIRED

The City of Bradenton Land Use Regulations adopted as Ordinance No. 2627, and amended under Ordinance No. 2926 requires that all applications for Land Use Atlas Amendments shall include public disclosure of applicants and their percentage of interest.

If the subject property is owned by:

A CORPORATION, list the principal officers, principal stockholders, and the percentage of stock owned by each; or

A TRUSTEE, list the beneficiaries of the trust with percentage of interest; or

A PARTNERSHIP or LIMITED PARTNERSHIP, list the name of the principals including general and limited partners; and

If there is a CONTRACT FOR PURCHASE, whether contingent on this application or not, and whether a Corporation, Trustee, or Partnership, list the names of the contract purchasers below, including the principal officers, stockholders, beneficiaries, or partners. If any contingency clause or contract terms involve additional parties, list all individuals or officers if a corporation, trust, or partnership. This is in addition to the list of owners.

NOTE: 1) *Changes of ownership or changes in contracts for purchase subsequent to the date of the application, but prior to the date of final public hearing, a supplemental Disclosure of Interest shall be filed. 2) Disclosure shall not be required of any entity whose interests is solely equity interest which are traded on an established securities market in the United States or another country.*

NAME, ADDRESS, TITLE	PERCENTAGE INTEREST, STOCK, OR OWNERSHIP
Nishith Patel 5637 clearwater court , FL , 342 Mgı (owner ___ contract purchaser ___)	100 % Owner Shiv Ohm PL
_____ (owner ___ contract purchaser ___)	_____
_____ (owner ___ contract purchaser ___)	_____

Under penalties of perjury, I declare that I have read the foregoing affidavit and that the facts stated in it are true.

Signature: _____ (Applicant): Nishith Patel (Shiv Ohm Pl)

NOTARY — REQUIRED

STATE OF FLORIDA
COUNTY OF Manatee

The foregoing instrument was sworn to (or affirmed) and subscribed before me this 16th day of Feb, 2026, by NIshith Patel, who is personally known to me or who has produced [redacted] entification.

A.O. Patel
Signature

AAKASH PATEL, Notary Public
Print Name

State of Florida – My Commission Expires: 07/27/28

AAKASH PATEL
NOTARY PUBLIC
MY COMMISSION
EXPIRES 7-27-2028
STATE OF FLORIDA
COMMISSION NUMBER HH 526937

Zoning Atlas Amendment Application

Department of Planning & Community Development
101 Old Main Street, Bradenton, FL 34205
Ph: (941) 932-9400
www.cityofbradenton.com

DISCLOSURE AFFIDAVIT — REQUIRED

The City of Bradenton Land Use Regulations adopted as Ordinance No. 2627, and amended under Ordinance No. 2926 requires that all applications for Land Use Atlas Amendments shall include public disclosure of applicants and their percentage of interest.

If the subject property is owned by:

A CORPORATION, list the principal officers, principal stockholders, and the percentage of stock owned by each; or

A TRUSTEE, list the beneficiaries of the trust with percentage of interest; or

A PARTNERSHIP or LIMITED PARTNERSHIP, list the name of the principals including general and limited partners; and

If there is a CONTRACT FOR PURCHASE, whether contingent on this application or not, and whether a Corporation, Trustee, or Partnership, list the names of the contract purchasers below, including the principal officers, stockholders, beneficiaries, or partners. If any contingency clause or contract terms involve additional parties, list all individuals or officers if a corporation, trust, or partnership. This is in addition to the list of owners.

NOTE: 1) *Changes of ownership or changes in contracts for purchase subsequent to the date of the application, but prior to the date of final public hearing, a supplemental Disclosure of Interest shall be filed. 2) Disclosure shall not be required of any entity whose interests is solely equity interest which are traded on an established securities market in the United States or another country.*

NAME, ADDRESS, TITLE	PERCENTAGE INTEREST, STOCK, OR OWNERSHIP
Rachna Patel 5637 clearwater court , FL, 34211 Mgr (owner ___ contract purchaser ___)	100 % owner Zeeva Re LLC
___ (owner ___ contract purchaser ___)	___
___ (owner ___ contract purchaser ___)	___

Under penalties of perjury, I declare that I have read the foregoing affidavit and that the facts stated in it are true.

Signature: _____ (Applicant): Rachna Patel (Zeeva Re LLC)

NOTARY — REQUIRED

STATE OF FLORIDA
COUNTY OF Manatee

The foregoing instrument was sworn to (or affirmed) and subscribed before me this 16th day of Feb, 2026, by RACHNA PATEL, who is personally known to me or who has produced [redacted] ification.

AAKASH PATEL NOTARY PUBLIC MY COMMISSION EXPIRES 7-27-2028 STATE OF FLORIDA COMMISSION NUMBER HH 526937

Signature

AAKASH PATEL, Notary Public
Print Name

State of Florida – My Commission Expires: 07/27/28

AGENDA ITEM NO. 7.c

Item Cover Page

CITY COUNCIL MEETING AGENDA ITEM REPORT

DATE: May 27, 2026

SUBMITTED BY: Jamie Schindewolf, Planning & Community Development

ITEM TYPE: Ordinance

AGENDA SECTION: BUSINESS/ADVERTISING, PETITIONS, HEARINGS & COMMUNICATIONS

SUBJECT: **Quasi-Judicial:** ORDINANCE 4067 - SECOND READING AND PUBLIC HEARING
AN ORDINANCE OF THE CITY OF BRADENTON, FLORIDA, AMENDING THE CITY OF BRADENTON COMPREHENSIVE PLAN FUTURE LAND USE MAP TO DESIGNATE CERTAIN LAND GENERALLY LOCATED WEST OF 15TH STREET WEST, NORTH OF 6th AVENUE WEST, AND SOUTH OF MANATEE AVE WEST, IDENTIFIED AS PARCEL ID 3354500109, AND MORE PARTICULARLY DESCRIBED HEREIN, CONTAINING APPROXIMATELY 3.9464 ACRES AND OWNED BY MANATEE COUNTY, FROM THE URBAN CENTRAL BUSINESS DISTRICT (UCBD) FUTURE LAND USE CATEGORY TO THE URBAN CORE (URBCORE) FUTURE LAND USE CATEGORY; PROVIDING FOR APPLICABILITY; PROVIDING FOR SEVERABILITY; AND PROVIDING FOR AN EFFECTIVE DATE.

SUGGESTED ACTION: Move to approve or deny Ordinance 4067.

Is this item Quasi-Judicial?
Yes

Does this item require a public hearing?
Yes

EXPLANATION:

Paige Estigarribia of ZNS Engineering; Agent for Manatee County Government, is pursuing a Comprehensive Plan Map Amendment on the subject property to change the future land use category from Urban Central Business District (UCBD) to Urban Core (URBCORE).

FINANCIAL IMPACT:
N/A

ATTORNEY REVIEW/RECOMMENDATION:
Reviewed by Conflict Counsel Attorney Erica Augello.

SUGGESTED MOTION:
Motion to approve or deny Ordinance 4067.

ATTACHMENTS:
Ordinance 4067
Staff Report
Application Materials

ORDINANCE NO. 4067

AN ORDINANCE OF THE CITY OF BRADENTON, FLORIDA, AMENDING THE CITY OF BRADENTON COMPREHENSIVE PLAN FUTURE LAND USE MAP TO DESIGNATE CERTAIN LAND GENERALLY LOCATED WEST OF 15TH STREET WEST, NORTH OF 6th AVENUE WEST, AND SOUTH OF MANATEE AVE WEST, IDENTIFIED AS PARCEL ID 3354500109, AND MORE PARTICULARLY DESCRIBED HEREIN, CONTAINING APPROXIMATELY 3.9464 ACRES AND OWNED BY MANATEE COUNTY, FROM THE URBAN CENTRAL BUSINESS DISTRICT (UCBD) FUTURE LAND USE CATEGORY TO THE URBAN CORE (URBCORE) FUTURE LAND USE CATEGORY; PROVIDING FOR APPLICABILITY; PROVIDING FOR SEVERABILITY; AND PROVIDING FOR AN EFFECTIVE DATE.

WHEREAS, Article VIII, Section 2, Constitution of the State of Florida, as revised in 1968, provides for and establishes municipalities and grants to those municipalities governmental, corporate, and proprietary powers to enable them to conduct municipal government, perform municipal functions, render municipal services, and authorizes said municipalities to exercise any power for municipal purposes, except as otherwise provided by law; and,

WHEREAS, Chapter 166, Florida Statutes, The Municipal Home Rule Powers Act, implements by general law the authority and jurisdiction granted to municipalities by the Florida Constitution and establishes home rule for said municipalities; and,

WHEREAS, Chapter 163, Florida Statutes, Part II, Local Government Comprehensive Planning/Land Development Regulation, requires, authorizes and empowers municipalities to prepare, adopt, amend and enforce Comprehensive Plans for the development of the City and empowering the City Council of the City of Bradenton to plan for the City's future development and growth in order to responsibly guide the future growth and development of the City, to implement adopted or amended Comprehensive Plans by the adoption of appropriate land development regulations and to establish, support and maintain procedures to carry out the provisions and purposes of said Statute; and,

WHEREAS, pursuant to Section 163.3174, Florida Statutes, the City Council of the City of Bradenton duly designated its Planning Commission as the Local Planning Agency (LPA) for the City of Bradenton; and,

WHEREAS, the City amends Comprehensive Plans and maps from time to time, and has adopted procedures by which to amend these documents, requiring a public hearing before the Planning Commission and

City Council; and

WHEREAS, Manatee County (the "Property Owner" or "Applicant") owns the properties described in Exhibit "A", attached hereto (collectively, the "Property"); and

WHEREAS, Paige Estigarribia, agent for the Property Owner, submitted a Future Land Use Map application to designate the Property, consisting of approximately 3.9464 acres, as UC, Urban Core (the "Amendment"); and

WHEREAS, the LPA and the City Council have in the preparation of the Amendment to the City's Comprehensive Plan performed or caused to be performed, the necessary studies and surveys, the collection of appropriate data, the holding of such public hearings, workshops and meetings, as necessary, and have effectively provided for public participation, notice, and opportunity for oral or written comments; and,

WHEREAS, the City of Bradenton's LPA held a public hearing on April 15, 2026, to consider the proposed Amendment; and,

WHEREAS, the LPA having reviewed and considered all comments received during said hearing, found that the Amendment furthers the goals, objectives and policies of the City's Comprehensive Plan and recommended said Amendment to the City Council for approval; and,

WHEREAS, the City Council held a public hearing May 27, 2026, to consider the proposed Amendment; and,

WHEREAS, based on the matters of record received by the City Council at the required public hearing held on May 27, 2026 after proper notice, including comments received from applicable reviewing agencies, and finding the proposed Amendment meets the requirements of Chapter 163, Florida Statutes, and is consistent with the goals, objectives and policies of the City's Comprehensive Plan, the City Council, in the exercise of its home rule and statutory authority, has determined it necessary and desirable, in order to protect the public health, safety and welfare, to adopt said Amendment to the Comprehensive Plan.

NOW, THEREFORE, BE IT ORDAINED BY THE CITY COUNCIL OF THE CITY OF BRADENTON, FLORIDA, AS FOLLOWS:

1. The recitals set forth above are true and correct and are hereby adopted as findings by the City Council for the adoption of this Ordinance. Based on such findings the City Council determines that the City of Bradenton Comprehensive Plan should be amended as described in Sections 2 below.

2. The Future Land Use Map of the City of Bradenton is hereby amended, classifying the Property as UC, Urban Core

3. The applicability and effect of the City of Bradenton Comprehensive Plan shall be as provided by the Chapter 163, Florida Statutes, and this Ordinance. Except to the extent amended hereby, the Comprehensive Plan is hereby ratified, confirmed and remains in full force and effect.

4. In the event any provision or portion of this Ordinance is declared by any Court of competent jurisdiction to be void, unconstitutional or unenforceable, then, and in that event, all remaining provisions and portions of this Ordinance shall remain in full force and effect.

5. This ordinance adopting the Amendment shall become effective as provided by law. The development authorized pursuant to the Amendment is expressly conditioned upon the property owner executing the local development agreement approved by the City on May 27, 2026, and recording it in the official records of Manatee County, Florida, in accordance with Florida Statute 163.3239, no later than one year after the effective date hereof.

PASSED AND DULY ADOPTED, BY THE CITY COUNCIL FOR THE CITY OF BRADENTON, FLORIDA, WITH A QUORUM PRESENT AND VOTING, THIS 27th DAY OF MAY 2026.

ATTEST:

THE CITY OF BRADENTON, BY AND THROUGH THE CITY COUNCIL OF THE CITY OF BRADENTON

_____
Tamara Melton
CITY CLERK

_____
Gene Brown
MAYOR

APPROVED AS TO FORM:

_____
Erica Augello
ATTORNEY

Planning Commission	April 15, 2026
City Council 1st Reading	May 13, 2026
City Council 2nd Reading and Public Hearing	May 27, 2026
Local Planning Agency ad published	April 5, 2026
City Council hearing ad published	May 3, 2026

EXHIBIT A

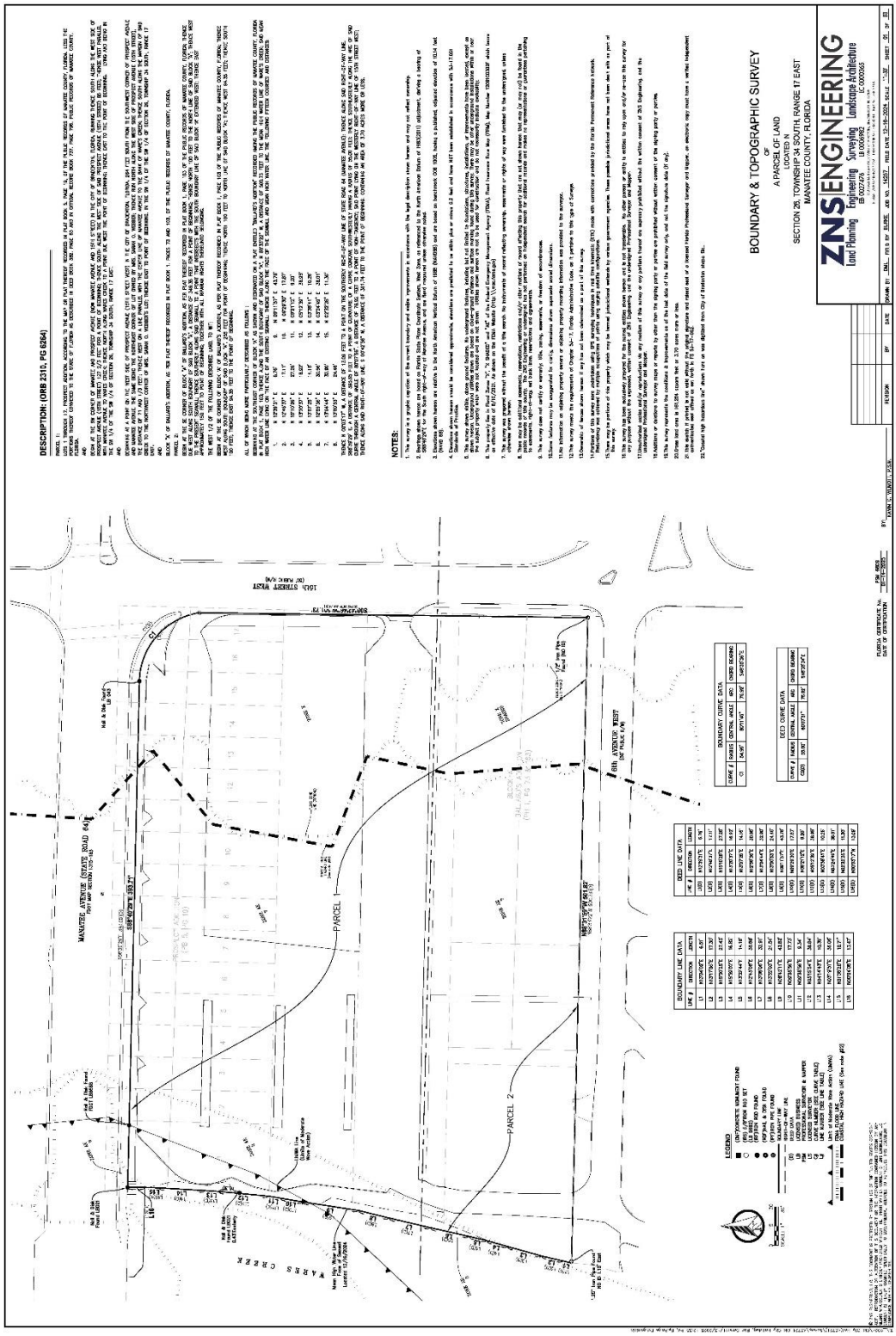
BOUNDARY & TOPOGRAPHIC SURVEY
OF
A PARCEL OF LAND
IN
SECTION 28, TOWNSHIP 34 SOUTH, RANGE 17 EAST
MANATEE COUNTY, FLORIDA
ZNS ENGINEERING
Land Planning Engineering Surveying Landscape Architecture
NOTES:
DESCRIPTION: (ORB 2310, PG 6264)
MANATEE AVENUE (STATE ROAD 64)
10th STREET WEST
9th AVENUE WEST
PARCEL
PARCEL 2
WARES CREEK

City of Bradenton
Planning and Community Development Department
City Council
May 27, 2026

Staff Report

Case Number:	PLN-CPS-26-0003 – ORD 4067
Applicant:	Paige Estigarribia, ZNS Engineering
Owner:	Manatee County Government
Address:	500 15TH St W, BRADENTON, FL 34205
Parcel ID No:	3354500109
Current Zoning:	T-5 Urban Center
Future Land Use:	UCBD (Urban Central Business District)
Flood Zone:	AE, X

Surrounding Property - Zoning and Future Land Use:

Current Zoning:

North:	Manatee Avenue West, T-5, T4-O (General Urban Open)
South:	6th Avenue West, T-5
East:	15th Street West, T-5
West:	Wares Creek

Future Land Use:

North:	Manatee Avenue West, UCBD, RESHIGH
South:	6th Avenue West, UCBD
East:	15th Street West, Urban Core
West:	Wares Creek

SUMMARY OF REQUEST

Paige Estigarribia, ZNS Engineering Agent for Manatee County Government, is pursuing a Comprehensive Plan Map Amendment on the subject property. The map below shows the area of the request along with surrounding Future Land Use designations.

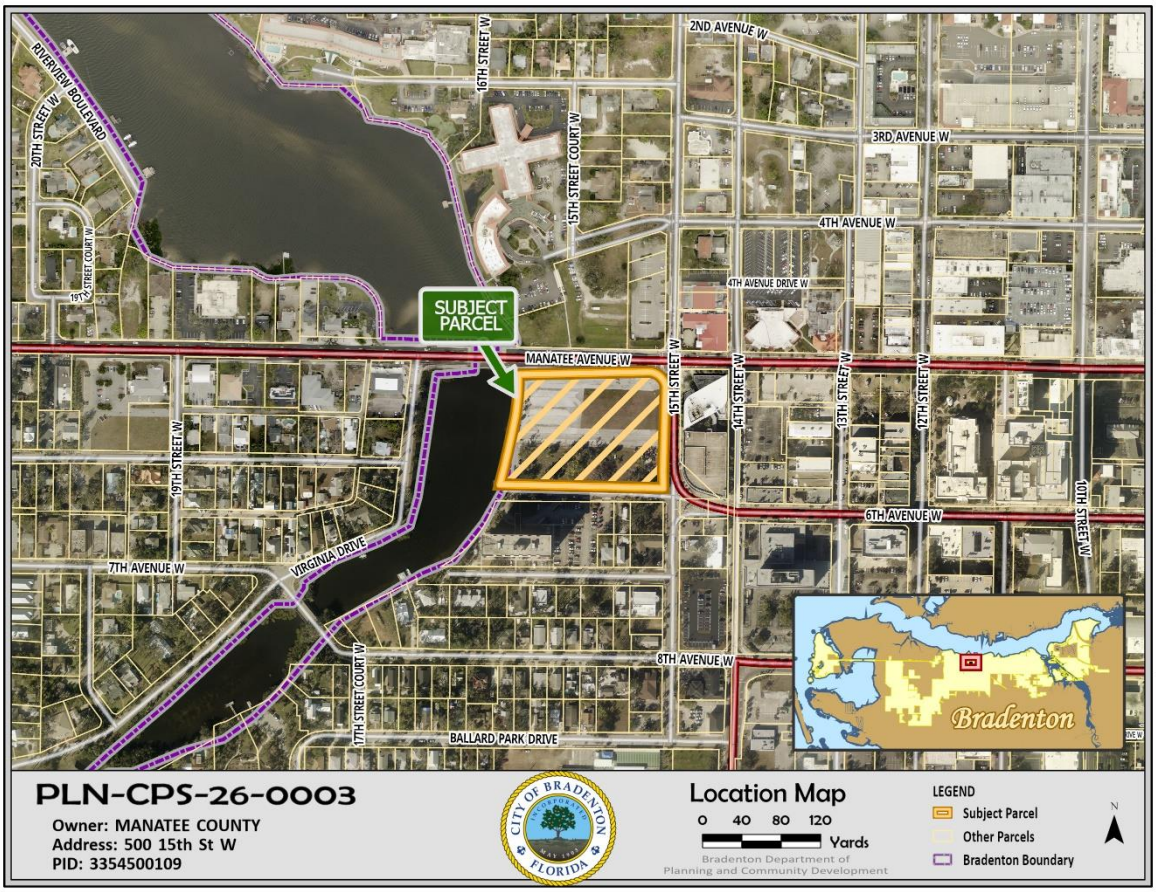

Urban Central Business District *(Current Future Land Use Classification):*

The Comprehensive Plan describes the Urban Central Business District classification as:

> The purpose of the UCBD category is to establish, define, promote, and facilitate the redevelopment and enhancement of the City's primary and historical urban center. The UBCD land use category is further intended to implement the downtown and general redevelopment goals, objectives, and policies of the Future Land Use Element as well as to promote the accomplishment of the City's Community Redevelopment Area (CRA) designation for the downtown area and the implementation of redevelopment plans, studies, and regulations.

This classification applies to much of the downtown area of Bradenton, spanning from Wares Creek to 9th Street East, and running just south of 9th Avenue West along the south.

The intensity and density allowance is:

> Maximum floor area ratio: 8.0
>
> Maximum base density: 40 dwelling units per acre
>
> Maximum Density with moderate income housing bonus: 50 dwelling units per acre (Dwelling units proposed above the base density threshold must meet the City's low and moderate income housing guidelines as established in the City of Bradenton Local Housing Agency Plan (LHAP) as may be amended from time to time, as well as Policies 1.2.1 – 1.2.4 of the Housing Element.)

Urban Core *(Proposed Future Land Use Classification)*

The Comprehensive Plan describes the Urban Core classification as:

> The Urban Core is located within the City of Bradenton's Urban Central Business District and provides the hub for economic development and civic uses. Permitted Uses include: offices, personal and professional services, commercial, retail, public and semi-public facilities, educational, institutional, restaurants, parks, recreation, and entertainment venues, and medium to high density residential. To foster the City's redevelopment efforts and enhancement of this mixed use center, densities and intensities are increased within the Urban Core from those allowed within the UCBD category.

This classification is limited. It applies to an area predominately from 15th Street West to 6th Street West, bounded by Barcarrota Boulevard or 3rd Avenue West to the north and 8th Avenue West to the South.

The intensity and density allowance is:

Maximum floor area ratio: 12.0

Maximum base density: 60 dwelling units [per] acre, up to 200 units per acre if approved by the city council and meets the following criteria:

- Provides for multi-use solutions for transportation with an emphasis on alternate transit modes and pedestrian access and walkability;
- Development that is arranged in block dimensions that maintain a pedestrian scale
- Includes a public park, plaza, courtyards and/or public art.
- Architecture that recognizes the existing context of the area and provides for massing, height, building composition, proportion and materials

Maximum base density with low and moderate income housing bonus: 70 dwelling units per acre (Dwelling units proposed above the base density threshold must meet the City's low and moderate income housing guidelines as established in the City of Bradenton Local Housing Agency Plan (LHAP) as may be amended from time to time, as well as Policies 1.2.1 – 1.2.4 of the Housing Element.) Low and moderate income housing is also eligible for a density bonus up to 200 units per acre.

Coastal High Hazard Area

Policy 5.3.1.2 states:

> Comprehensive Plan Amendments within the CHHA which would increase the maximum allowable density for the subject property shall be subject to a Development Agreement with the City which shall include, at a minimum, a binding conceptual site plan and any required mitigation plan for hurricane evacuation, consistent with Section 163.3178(8)(a), F.S.. The Development Agreement shall be approved by the City Council prior to or concurrent with the adoption of the proposed map amendment.

A Land Development Agreement has been included on the agenda for this meeting. Approval of the Comprehensive Plan Amendment is precluded upon the approval of the Land Development Agreement. Section 163.3178(8)(a) follows.

(8)(a) A proposed comprehensive plan amendment shall be found in compliance with state coastal high-hazard provisions if:

1. The adopted level of service for out-of-county hurricane evacuation is maintained for a category 5 storm event as measured on the Saffir-Simpson scale; or

2. A 12-hour evacuation time to shelter is maintained for a category 5 storm event as measured on the Saffir-Simpson scale and shelter space reasonably expected to accommodate the residents of the development contemplated by a proposed comprehensive plan amendment is available; or

3. Appropriate mitigation is provided that will satisfy subparagraph 1. or subparagraph 2. Appropriate mitigation shall include, without limitation, payment of money, contribution of land, and construction of hurricane shelters and transportation facilities. Required mitigation may not exceed the amount required for a developer to accommodate impacts reasonably attributable to development. A local government and a developer shall enter into a binding agreement to memorialize the mitigation plan.

(b) For those local governments that have not established a level of service for out-of-county hurricane evacuation by following the process in paragraph (a), the level of service shall be no greater than 16 hours for a category 5 storm event as measured on the Saffir-Simpson scale.

(c) This subsection shall become effective immediately and shall apply to all local governments. Local governments shall amend their future land use map and coastal management element to include the new definition of coastal high-hazard area and to depict the coastal high-hazard area on the future land use map.

The provided Hurricane Mitigation Plan, presented as part of the application materials as Exhibit C, has been amended from the first reading and public hearing for the Land Development Agreement to indicate that, according to a study by the Tampa Bay Regional Planning Council, the current Scenario Clearance Time to Shelter for Manatee County Evacuation Level A is 9.5 hours, which is less than the 12-hour evacuation time to shelter required by the Florida Statue. The mitigation plan also provides information on local shelters and advice regarding how residents should prepare, including a requirement to move cars from the lower levels of the parking structure.

Zoning Classification

The zoning classification of this property is T-5. A change in the future land use classification does not change the zoning district. For informational purposes, the following page shows the use table for the Form Based Code. Uses listed under T-5 are permitted on this property and will continue to be regardless of whether the future land use classification is amended.

A change in the future land use classification will not grant additional height or change the setback allowance. The applicant would be allowed to construct a mixed-use building under the current future land use classification. The change in future land use classification grants increased density and intensity.

TABLE 4.7 Specific Function & Use. This table delegates specific functions and uses within Transect Zones. See Article 12 for definitions and limitations of uses.

a. RESIDENTIAL	T3 T4-S	T4-R	T4-O	T5	T6	SD
Multi-Family		P	P	P	P	
Single Family Attached		P	P	P	P	
Single Family Semi-Detached		P	P	P		
Single Family Detached	P	P	P	P		
Accessory Unit	P	P	P	P		
b. LODGING						
Hotel (no room limit)				P	P	SU
Inn (up to 10 rooms)		SU	SU	P	P	
Bed and Breakfast (up to 6 rooms)	SU	P	P	P		
Boarding House		SU	SU	SU	SU	SU
School Dormitory	SU	P	P	P	P	P
c. OFFICE						
Office Building			P	P	P	SU
Live-Work Unit		P	P	P	P	SU
d. RETAIL AND SERVICE						
Special Events		SU	SU	SU	SU	P
Retail Building			P	P	P	SU
Display Gallery			P	P	P	SU
Restaurant			P	P	P	SU
Kiosk			P	P	P	SU
Café/Sidewalk Café<20 seats (1)			P	P	P	P
Push Cart				SU	SU	SU
Lounge			SU	SU	SU	SU
Secondhand Store			P	P	P	SU
Pawnshop						SU
e. CIVIC						
Convention Center				SU	SU	P
Conference Center				SU	P	P
Exhibition Center			SU	SU	SU	P
Fountain or Public Art	P	P	P	P	P	P
Library		P	P	P	P	P
Live Theater			P	P	P	P
Movie Theater			P	P	P	P
Museum			SU	P	P	P
Indoor Amusement Center			SU	SU	SU	SU
Outdoor Amusement Center			SU	SU	SU	SU
Outdoor Auditorium			SU	P	P	P
Passenger Terminal			SU	SU	SU	P
Playground	P	P	P	P	P	P
Sports Stadium			SU	SU	SU	P
Surface Parking Lot		P	P	P	P	P
Club		SU	SU			SU
Religious Assembly (3)	SU	P	P	P	P	P

f. OTHER: URBAN FARMING	T3 T4-S	T4-R	T4-O	T5	T6	SD
Grain/Food Storage						P
Greenhouse <200 SF	P	P	P			P
Veterinary Clinic		P	P			P
g. OTHER: AUTOMOTIVE						
Service Station/Repair			SU	SU		SU
Car Wash						P
Auto Sales/Rental				SU		P
Drive-Through Facility			SU	SU	SU	P
Parking Lot/Garage			P	P	P	SU
Automotive Specialty			SU	SU		SU
Shopping Center						SU
Shopping Mall						SU
h. OTHER: CIVIL SUPPORT						
Fire Station	SU	SU	P	P	P	P
Police Station	SU	SU	P	P	P	P
Cemetery	SU	SU	SU	SU	SU	P
Funeral Home			SU	P	P	P
Hospital				SU	SU	P
Medical Clinic		~~P~~ SU	~~P~~ SU	~~P~~ SU	~~P~~ SU	~~P~~ SU
Marina		SU	SU	SU	SU	SU
i. OTHER: EDUCATION						
College			SU	SU	SU	P
Schools, Public & Private (3)	SU	SU	SU	SU	SU	P
Business Training Schools			P	P	P	P
Educational	SU	SU	SU	SU	SU	SU
Cultural			SU	SU	SU	SU
Other – Child Care Center (2)(3)	SU	SU	SU	SU	SU	SU
j. OTHER: INDUSTRIAL						
Heavy Industrial Facility						P
Light Industrial Facility			SU	SU		P
Laboratory Facility			SU	SU		P
Water Supply Facility						P
Sewer Waste Facility						P
Electric Substation	SU	SU	SU	SU	SU	P
Wireless Transmitter			SU	SU	SU	SU
Cremation Facility						P
Warehouse			SU	SU		P
Produce Storage						P
Heating & Fuel Storage						P
Ice Plant				SU		SU
Mini-Storage (4)			SU			P

P = PERMITTED SU = SPECIAL USE BLANK = NOT ALLOWED

1. City Council approval may be required Refer to Section 2.2.20 and 4.3.1 for alcoholic beverage sales and approval requirements. Establishments with alcoholic beverage sales are exempt from distance separation requirements from Religious Assembly uses.

ANALYSIS

This Comprehensive Map Amendment request, if approved, will expand the Urban Core designation to the west of its current boundary. However, it does not impact the contiguousness of the district, as the subject property is adjacent to 1401 Manatee Avenue West, a property already classified as Urban Core.

The applicant provided an extensive Community Impact Report, which has been provided to Council as an attachment with this agenda item.

The major difference in the two future land use categories is the difference in the number of potential units. Under UCBD, the site could have up to 148 units. Under Urban Core, the site could have up to 789 units (only if approved for a bonus by City Council). If a bonus is not requested, the site would be allowed 236 units under the Urban Core designation.

In the Community Impact Report, the applicant has indicated that they intend to request a density increase for a total of 345 multifamily units. This will come before City Council as a separate request.

The applicant has also included a Traffic Study and a Hurricane Mitigation Plan with the Community Impact Report, which should be considered as part of the decision-making process.

Respectfully submitted,

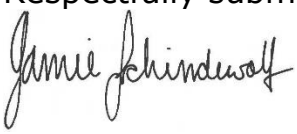

Jamie Schindewolf
Senior Planner

EXHIBIT A: Legal Description and Survey
EXHIBIT B: Location Map
EXHIBIT C: Future Land Use Map (Current and Proposed)
EXHIBIT D: Zoning Map

EXHIBIT A

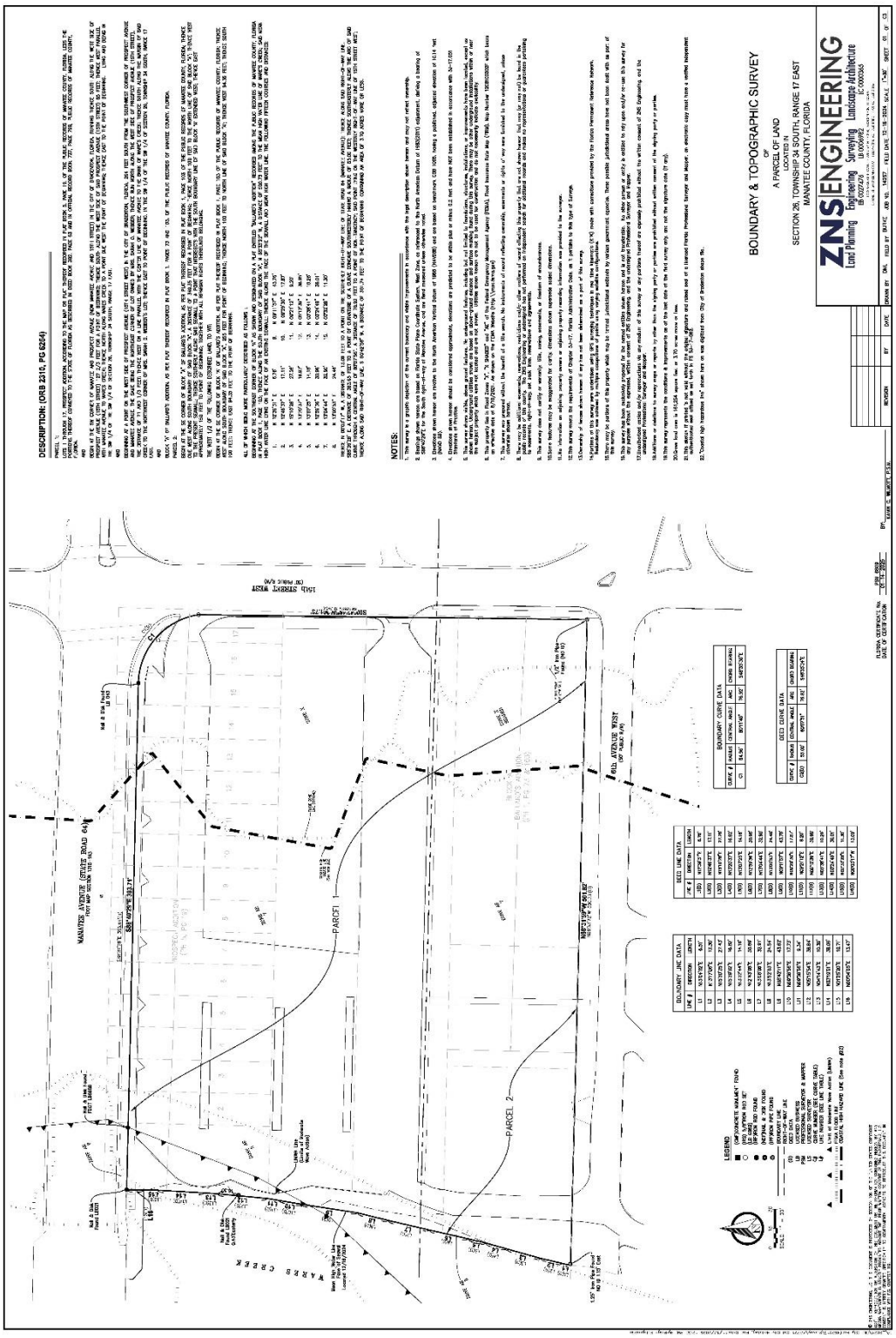
BOUNDARY & TOPOGRAPHIC SURVEY
OF
A PARCEL OF LAND
LOCATED IN
SECTION 26, TOWNSHIP 34 SOUTH, RANGE 17 EAST
MANATEE COUNTY, FLORIDA
ZNS ENGINEERING
Land Planning Engineering Surveying Landscape Architecture
PARCEL 1
PARCEL 2
WARES CREEK
MANATEE AVENUE (STATE ROAD 64)
6th AVENUE WEST
15th STREET WEST
BOUNDARY CURVE DATA
DEED CURVE DATA
BOUNDARY LINE DATA
DEED LINE DATA
LEGEND

EXHIBIT B

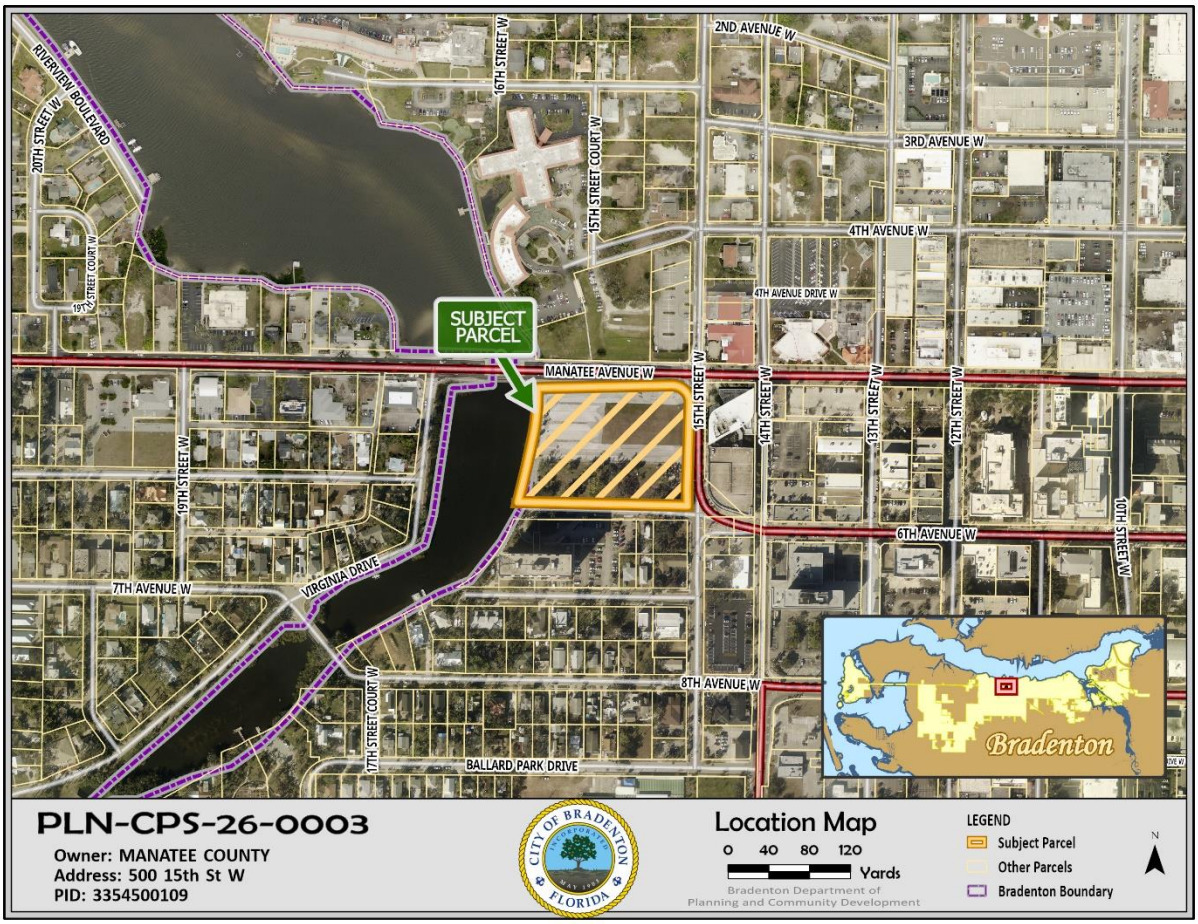
SUBJECT PARCEL
MANATEE AVENUE W
2ND AVENUE W
3RD AVENUE W
4TH AVENUE W
4TH AVENUE DRIVE W
6TH AVENUE W
7TH AVENUE W
8TH AVENUE W
BALLARD PARK DRIVE
VIRGINIA DRIVE
RIVERVIEW BOULEVARD
20TH STREET W
19TH STREET COURT W
19TH STREET W
17TH STREET COURT W
16TH STREET W
15TH STREET COURT W
15TH STREET W
14TH STREET W
13TH STREET W
12TH STREET W
10TH STREET W
Bradenton
PLN-CPS-26-0003
Owner: MANATEE COUNTY
Address: 500 15th St W
PID: 3354500109
CITY OF BRADENTON FLORIDA
Location Map
0 40 80 120
Yards
Bradenton Department of Planning and Community Development
LEGEND
Subject Parcel
Other Parcels
Bradenton Boundary
N

EXHIBIT C

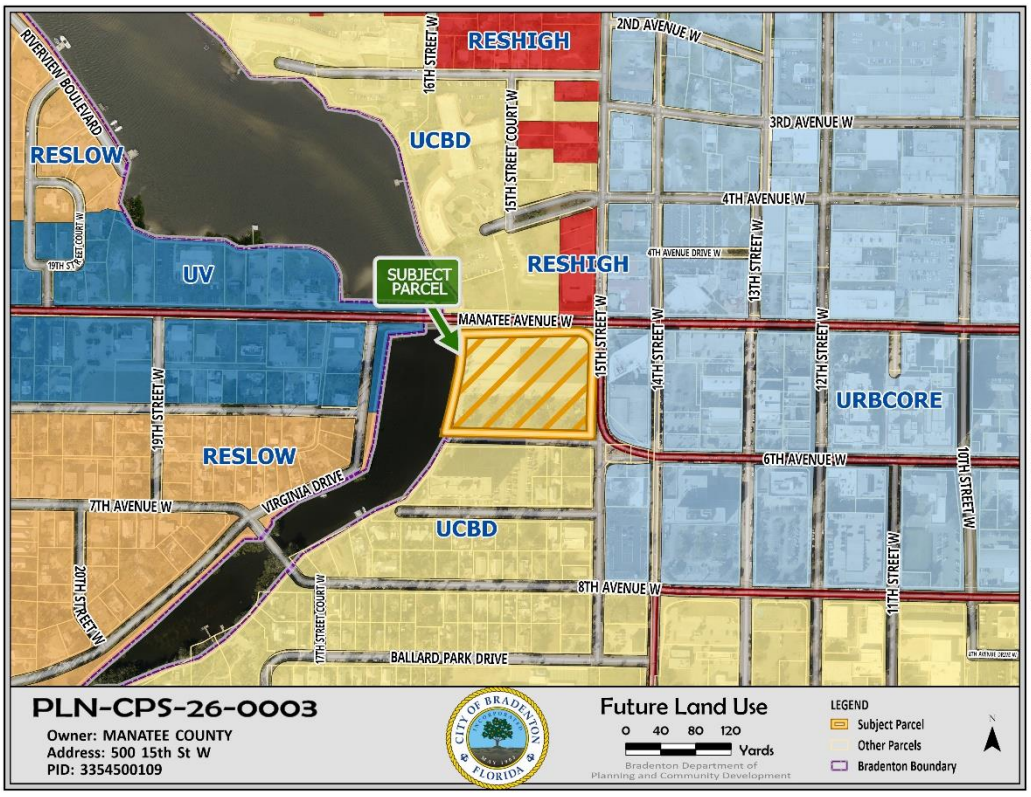
RESHIGH
2ND AVENUE W
16TH STREET W
RIVERVIEW BOULEVARD
UCBD
3RD AVENUE W
15TH STREET COURT W
RESLOW
4TH AVENUE W
4TH AVENUE DRIVE W
13TH STREET W
19TH STREET COURT W
UV
SUBJECT PARCEL
RESHIGH
MANATEE AVENUE W
15TH STREET W
14TH STREET W
12TH STREET W
URBCORE
19TH STREET W
RESLOW
6TH AVENUE W
10TH STREET W
VIRGINIA DRIVE
7TH AVENUE W
UCBD
20TH STREET W
11TH STREET W
8TH AVENUE W
17TH STREET COURT W
BALLARD PARK DRIVE
PLN-CPS-26-0003
Owner: MANATEE COUNTY
Address: 500 15th St W
PID: 3354500109
CITY OF BRADENTON FLORIDA
Future Land Use
0 40 80 120
Yards
Bradenton Department of Planning and Community Development
LEGEND
Subject Parcel
Other Parcels
Bradenton Boundary
N

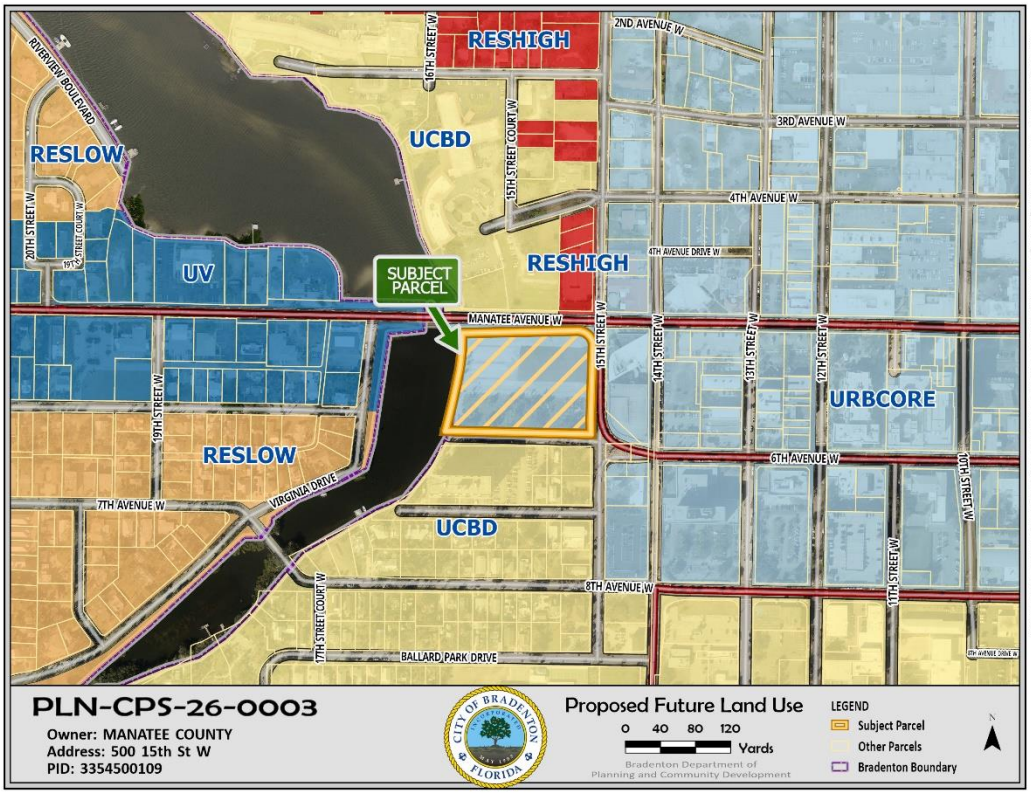
RESHIGH
2ND AVENUE W
16TH STREET W
RIVERVIEW BOULEVARD
UCBD
3RD AVENUE W
15TH STREET COURT W
RESLOW
4TH AVENUE W
20TH STREET W
19TH STREET COURT W
4TH AVENUE DRIVE W
UV
SUBJECT PARCEL
RESHIGH
MANATEE AVENUE W
15TH STREET W
14TH STREET W
13TH STREET W
12TH STREET W
URBCORE
19TH STREET W
RESLOW
6TH AVENUE W
10TH STREET W
VIRGINIA DRIVE
7TH AVENUE W
UCBD
11TH STREET W
8TH AVENUE W
17TH STREET COURT W
BALLARD PARK DRIVE
PLN-CPS-26-0003
Owner: MANATEE COUNTY
Address: 500 15th St W
PID: 3354500109
CITY OF BRADENTON FLORIDA
Proposed Future Land Use
0 40 80 120
Yards
Bradenton Department of Planning and Community Development
LEGEND
Subject Parcel
Other Parcels
Bradenton Boundary
N

EXHIBIT D

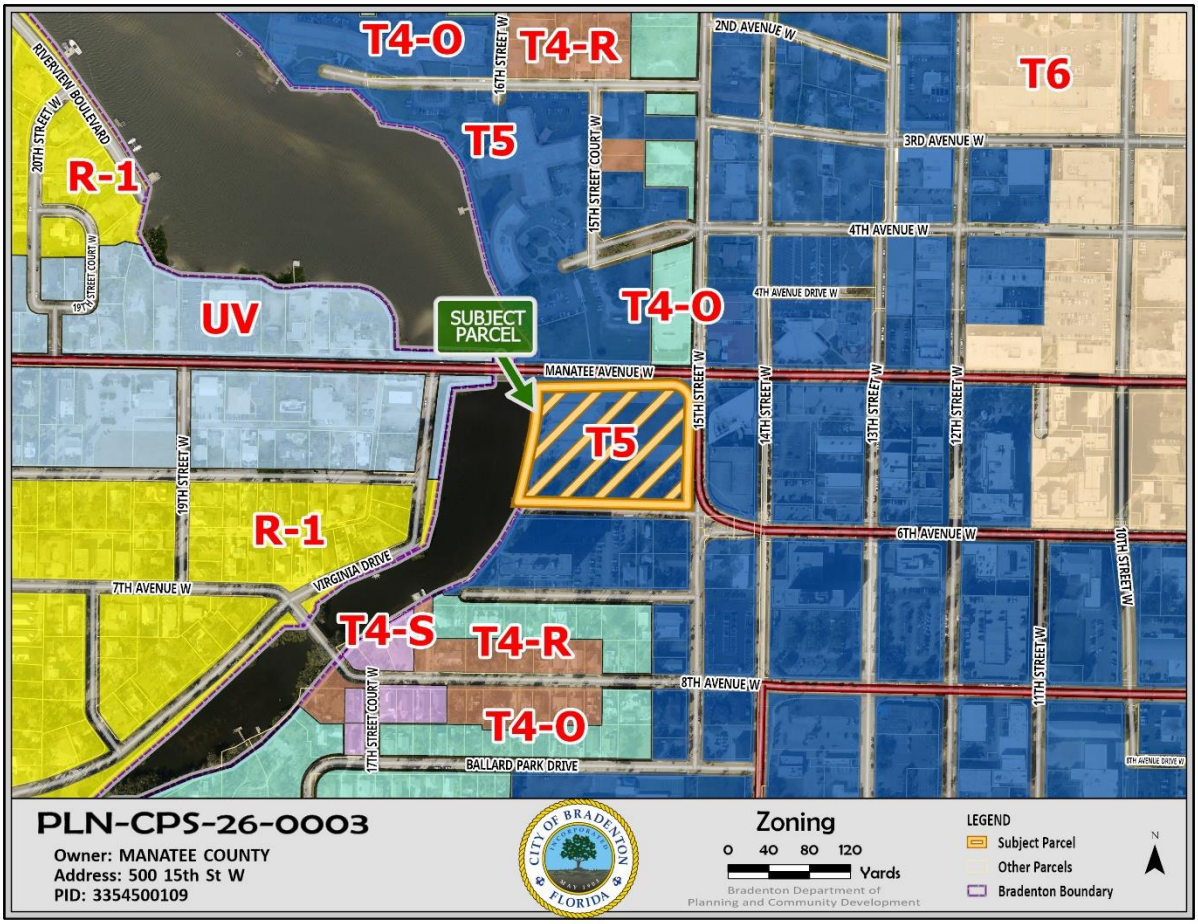
T4-O
T4-R
T6
T5
R-1
UV
SUBJECT PARCEL
T4-O
T5
R-1
T4-S
T4-R
T4-O
2ND AVENUE W
3RD AVENUE W
4TH AVENUE W
4TH AVENUE DRIVE W
MANATEE AVENUE W
6TH AVENUE W
7TH AVENUE W
8TH AVENUE W
BALLARD PARK DRIVE
VIRGINIA DRIVE
RIVERVIEW BOULEVARD
20TH STREET W
19TH STREET COURT W
19TH STREET W
16TH STREET W
15TH STREET COURT W
15TH STREET W
14TH STREET W
13TH STREET W
12TH STREET W
11TH STREET W
10TH STREET W
17TH STREET COURT W
PLN-CPS-26-0003
Owner: MANATEE COUNTY
Address: 500 15th St W
PID: 3354500109
CITY OF BRADENTON
FLORIDA
Zoning
0 40 80 120
Yards
Bradenton Department of
Planning and Community Development
LEGEND
Subject Parcel
Other Parcels
Bradenton Boundary
N

Old City Hall
Comprehensive Plan Future Land Use Map Amendment Application

March 2026

Prepared by:

ZNS ENGINEERING
Land Planning Engineering Surveying Landscape Architecture

List of Included Items

Letter of Request 3
Agent Authorization 5
Property Survey 7
Community Impact Report 9
a. Visual Impact Analysis 9
b. Land Use Assessment 10
c. Traffic Study 11
d. Environmental Impact Assessment 11
e. Area Impact Assessment 11
f. Hurricane Evacuation Analysis 12
g. Community Impact Report Appendix 13
1. Aerial Map
2. Current Future Land Use Map
3. Proposed Future Land Use Map
4. Traffic Analysis
5. Environmental Analysis

Conceptual Plan 16
Draft Land Development Agreement 17
Exhibit A. Legal Description
Exhibit B. Conceptual Site Plan
Exhibit C. Hurricane Mitigation Plan

March 6, 2026

Robin Singer, Director
Department of Planning and Community Development
101 Old Main Street
Bradenton, FL 34205

Re: ***Letter of Request***
Old City Hall Site – Comprehensive Plan Future Land Use Map Amendment Application
PID # 3354500109

Dear Ms. Singer:

On behalf of Manatee County as property owner, and our client Amres Investments, LLC, we respectfully request review of the enclosed Comprehensive Plan Future Land Use Map Amendment Application for the Old City Hall Site, located at 500 15th Street W, Bradenton Florida 34205 (PID # 3354500109). Included with this Application are the following documents:

A. Agent Authorization Form
B. Property Survey
C. Community Impact Report with Appendix of Maps and Analysis
D. Preliminary Concept Plan
E. Draft Land Development Agreement

Thank you for your review of this Application, and in your assistance processing said Application. Please do not hesitate to contact me should you need any additional information during your review.

Sincerely,

K. Paige Estigarribia, AICP
Director of Planning | Assistant Vice President

Agent Authorization

Agent Authorization Form

Department of Planning & Community Development
101 Old Main Street, Bradenton, FL 34205
Ph: (941) 932-9400
www.cityofbradenton.com

PLANNING & ZONING AGENT AUTHORIZATION FORM

Property Address: 500 15th Street West, Bradenton FL 34205

I, Manatee County, the registered property owner(s) of the above noted property, do hereby authorize

AMRES Investments, LLC, and its agent, ZNS Engineering

Print Name of Agent — Company Name

to act on my behalf and take all actions necessary for the processing, issuance and acceptance of this permit or certification and any and all standards and conditions applicable.

AGENT AUTHORIZATION — REQUIRED

1112 Manatee Avenue West, Bradenton, Florida 34205

Signature of Owner(s) — Owner(s) Address (if different than property above)

Signature of Agent — Agent Address and Phone

STATE OF FLORIDA, MANATEE COUNTY

The Foregoing instrument was acknowledged before me by means of ✓ physical presence or online notarization, this 12 day of December 2025, produced Personally Known respectively, as identification and who did (did not) take an oath:

NOTARY — REQUIRED

Signature

Peter Morrow, Notary Public
Print Name

PETER MORROW
Notary Public - State of Florida
Commission # HH 417361
My Comm. Expires Jul 5, 2027

State of Florida
My Commission Expires: 07/05/2027

Property Survey

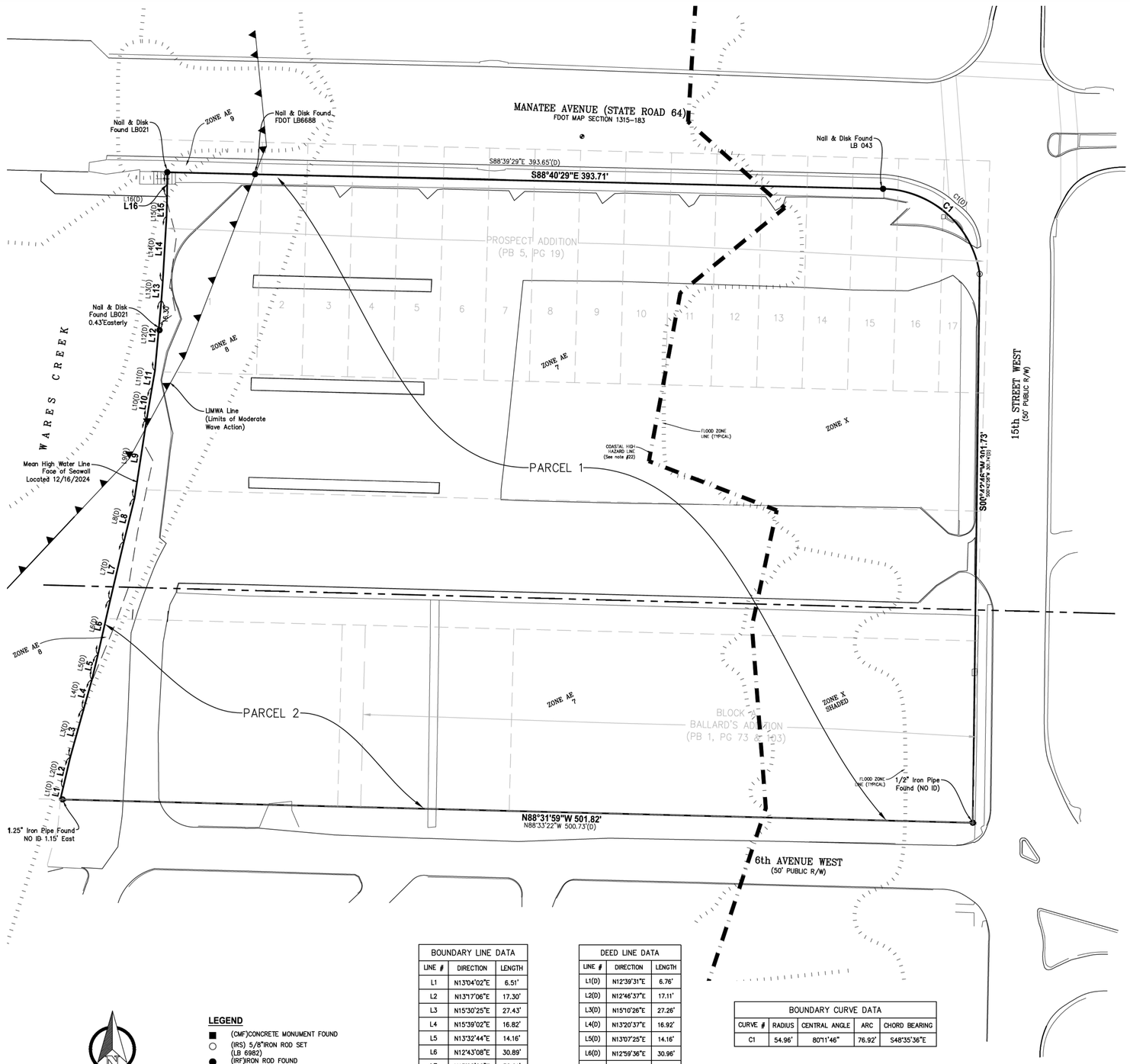

DESCRIPTION: (ORB 2310, PG 6264)

PARCEL 1:

LOTS 1 THROUGH 17. PROSPECT ADDITION. ACCORDING TO THE MAP OR PLAT THEREOF RECORDED IN PLAT BOOK 5. PAGE 19, OF THE PUBLIC RECORDS OF MANATEE COUNTY, FLORIDA. LESS THE PORTIONS THEREOF CONVEYED TO THE STATE OF FLORIDA AS DESCRIBED IN DEED BOOK 382. PAGE 63 AND IN OFFICIAL RECORD BOOK 737, PAGE 796, PUBLIC RECORDS OF MANATEE COUNTY, FLORIDA.

AND

BEGIN AT THE SW CORNER OF MANATEE AND PROSPECT AVENUE (NOW MANATEE AVENUE AND 15TH STREET) IN THE CITY OF BRADENTON, FLORIDA, RUNNING THENCE SOUTH ALONG THE WEST SIDE OF PROSPECT AVENUE (15TH STREET) 127 2/3 FEET FOR A POINT OF BEGINNING; THENCE SOUTH ALONG THE WEST SIDE OF SAID PROSPECT AVENUE (15TH STREET) 65 FEET; THENCE WEST PARALLEL WITH MANATEE AVENUE TO WARES CREEK; THENCE NORTH ALONG WARES CREEK TO A POINT DUE WEST THE POINT OF BEGINNING; THENCE EAST TO THE POINT OF BEGINNING. LYING AND BEING IN THE SW 1/4 OF THE SW 1/4 OF SECTION 26, TOWNSHIP 34 SOUTH, RANGE 17 EAST.

AND

BEGINNING AT A POINT ON THE WEST SIDE OF PROSPECT AVENUE (15TH STREET WEST) IN THE CITY OF BRADENTON, FLORIDA, 264 FEET SOUTH FROM THE SOUTHWEST CORNER OF PROSPECT AVENUE AND MANATEE AVENUE. THE SAME BEING THE NORTHEAST CORNER OF LOT OWNED BY MRS. SARAH O. WEBBER; THENCE RUN NORTH ALONG THE WEST SIDE OF PROSPECT AVENUE (15TH STREET), THE DISTANCE OF 71 AND 1/3 FEET; THENCE WEST ON A LINE PARALLEL WITH THE CENTER LINE OF MANATEE AVENUE TO THE BANK OF WARE'S CREEK; THENCE SOUTH ALONG THE MARGIN OF SAID CREEK TO THE NORTHWEST CORNER OF MRS. SARAH O. WEBBER'S LOT; THENCE EAST TO POINT OF BEGINNING. IN THE SW 1/4 OF THE SW 1/4 OF SECTION 26, TOWNSHIP 34 SOUTH, RANGE 17 EAST.

AND

BLOCK "A" OF BALLARD'S ADDITION, AS PER PLAT THEREOF RECORDED IN PLAT BOOK 1. PAGES 73 AND 103, OF THE PUBLIC RECORDS OF MANATEE COUNTY, FLORIDA.

PARCEL 2:

BEGIN AT THE SE CORNER OF BLOCK "A" OF BALLARD'S ADDITION, AS PER PLAT THEREOF RECORDED IN PLAT BOOK 1, PAGE 103 OF THE PUBLIC RECORDS OF MANATEE COUNTY, FLORIDA; THENCE DUE WEST ALONG SOUTH BOUNDARY OF SAID BLOCK "A", A DISTANCE OF 349.35 FEET FOR A POINT OF BEGINNING; THENCE NORTH 100 FEET TO THE NORTH LINE OF SAID BLOCK "A"; THENCE WEST TO THE PRESENT SEAWALL; THENCE SOUTHERLY ALONG SAID SEAWALL TO A POINT THAT INTERSECTS WITH THE SOUTH BOUNDARY LINE OF SAID BLOCK 'A' EXTENDED WEST; THENCE EAST APPROXIMATELY 150 FEET TO POINT OF BEGINNING; TOGETHER WITH ALL RIPARIAN RIGHTS THEREUNTO BELONGING.

THE WEST 1/2 OF THE FOLLOWING DESCRIBED LAND, TO WIT:

BEGIN AT THE SE CORNER OF BLOCK 'A' OF BALLARD'S ADDITION, AS PER PLAT THEREOF RECORDED IN PLAT BOOK 1, PAGE 103 OF THE PUBLIC RECORDS OF MANATEE COUNTY, FLORIDA; THENCE WEST ALONG SOUTH BOUNDARY OF SAID BLOCK "A", 255 FEET FOR POINT OF BEGINNING; THENCE NORTH 100 FEET TO NORTH LINE OF SAID BLOCK "A"; THENCE WEST 94.35 FEET; THENCE SOUTH 100 FEET; THENCE EAST 94.35 FEET TO THE POINT OF BEGINNING.

ALL OF WHICH BEING MORE PARTICULARLY DESCRIBED AS FOLLOWS :

BEGINNING AT THE SOUTHEAST CORNER OF BLOCK 'A" AS SHOWN AND DESIGNATED ON A PLAT ENTITLED "BALLARD'S ADDITION" RECORDED AMONG THE PUBLIC RECORDS OF MANATEE COUNTY, FLORIDA IN PLAT BOOK 1, PAGE 103; THENCE ALONG THE SOUTH BOUNDARY OF SAID BLOCK "A", N 88°33'22" W, A DISTANCE OF 500.73 FEET TO THE MEAN HIGH WATER LINE OF WARE'S CREEK; SAID MEAN HIGH WATER LINE LYING ON THE FACE OF AN EXISTING SEAWALL: THENCE ALONG THE FACE OF THE SEAWALL AND MEAN HIGH WATER LINE. THE FOLLOWING FIFTEEN COURSES AND DISTANCES:

1.	N 12°39'31" E	6.76'	9.	N 09°11'57" E	43.76'
2.	N 12°46'37" E	17.11'	10.	N 09°29'30" E	17.87'
3.	N 15°10'26" E	27.26'	11.	N 09°21'12" E	9.20'
4.	N 13°20'37" E	16.92'	12.	N 05°12'39" E	38.95'
5.	N 13°07'25" E	14.16'	13.	N 03°38'41" E	10.26'
6.	N 12°59'36" E	30.96'	14.	N 03°24'49" E	36.01'
7.	N 13°04'44" E	32.90'	15.	N 02°32'28" E	11.30'
8.	N 13°00'53" E	24.46'			

THENCE N 00°03'17" W, A DISTANCE OF 13.09 FEET TO A POINT ON THE SOUTHERLY RIGHT-OF-WAY LINE OF STATE ROAD 64 (MANATEE AVENUE): THENCE ALONG SAID RIGHT-OF-WAY LINE. S88°39'29" E. A DISTANCE OF 393.65 FEET TO A POINT OF CURVATURE OF A CURVE CONCAVE SOUTHWESTERLY HAVING A RADIUS OF 55.00 FEET; THENCE SOUTHEASTERLY ALONG THE ARC OF SAID CURVE THROUGH A CENTRAL ANGLE OF 80°07'56". A DISTANCE OF 76.92 FEET TO A POINT OF NON-TANGENCY; SAID POINT LYING ON THE WESTERLY RIGHT-OF-WAY LINE OF 15TH STREET WEST; THENCE ALONG SAID RIGHT-OF-WAY LINE. S 00°42'58" W. A DISTANCE OF 301.74 FEET TO THE POINT OF BEGINNING. CONTAINING AN AREA OF 3.70 ACRES MORE OR LESS.

NOTES:

1. This survey is a graphic depiction of the current boundary and visible improvements in accordance with the legal description shown hereon and may not reflect ownership.
2. Bearings shown hereon are based on Florida State Plane Coordinate System, West Zone, as referenced to the North American Datum of 1983(2011) adjustment, deriving a bearing of S88°40'29"E for the South right-of-way of Manatee Avenue, and are fiend measured unless otherwise noted.
3. Elevations shown hereon are relative to the North American Vertical Datum of 1988 (NAVD88) and are based on benchmark COB 1005, having a published, adjusted elevation of 10.14 feet (NAVD 88).
4. Elevations shown hereon should be considered approximate, elevations are predicted to be within plus or minus 0.2 feet and have NOT been established in accordance with 5J-17.051 Standards of Practice.
5. This survey shows visible, above ground features. No underground features, including but not limited to foundations, structures, installations, or improvements have been located, except as shown hereon. Underground utilities shown are based on above-ground evidence and surface marking found during this survey. There may be other underground installations within or near the subject property which were not located and are not shown. Utilities shown hereon are not to be used for construction and do not necessarily indicate availability.
6. This property lies in Flood Zones "X", "X SHADED" and "AE" of the Federal Emergency Management Agency (FEMA), Flood Insurance Rate Map (FIRM), Map Number 12081C0302F which bears an effective date of 8/10/2021. As shown on the FEMA Website (http: \\msc.fema.gov)
7. This survey was prepared without the benefit of a title search. No instruments of record reflecting ownership, easements or rights of way were furnished to the undersigned, unless otherwise shown hereon.
8. There may be additional easements, reservations, restrictions and/or other matters of record affecting this property that are not shown hereon that may (or may not) be found in the public records of this county. The ZNS Engineering or undersigned has not performed an independent search for additional records and makes no representations or guarantees pertaining to easements, right-of-way, set back lines, reservations and agreements.
9. This survey does not certify or warranty: title, zoning, easements, or freedom of encumbrances.
10. Some features may be exaggerated for clarity, dimensions shown supersede scaled dimensions.
11. No information on adjoining property owners or adjoining property recording information was provided to the surveyor.
12. This survey meets the requirements of Chapter 5J-17, Florida Administrative Code, as it pertains to this type of Surveys.
13. Ownership of fences shown hereon if any has not been determined as a part of this survey.
14. Portions of this survey were undertaken using GPS surveying techniques in real time kinematic (RTK) mode with corrections provided by the Florida Permanent Reference Network. Redundancy was achieved by multiple occupations of points using varying satellite configurations.
15. There may be portions of this property which may be termed jurisdictional wetlands by various government agencies. These possible jurisdictional areas have not been dealt with as part of this survey.
16. This survey has been exclusively prepared for the named entities shown hereon and is not transferable. No other person or entity is entitled to rely upon and/or re-use this survey for any purpose without the expressed, written consent of ZNS Engineering. and the undersigned Professional Surveyor and Mapper.
17. Unauthorized copies and/or reproductions via any medium of this survey or any portions thereof are expressly prohibited without the written consent of ZNS Engineering. and the undersigned Professional Surveyor and Mapper.
18. Additions or deletions to survey maps or reports by other than the signing party or parties are prohibited without written consent of the signing party or parties.
19. This survey represents the conditions & improvements as of the last date of the field survey only, and not the signature date (if any).
20. Gross land area is 161,254 square feet or 3.70 acres more or less.
21. This sketch if printed is not valid without the original signature and raised seal of a licensed Florida Professional Surveyor and Mapper, an electronic copy must have a verified independent authenticated seal affixed as set forth in FS 5J-17-062.
22. "Coastal high hazardous line" shown here on was digitized from City of Bradenton shape file..

BOUNDARY LINE DATA		
LINE #	DIRECTION	LENGTH
L1	N13°04'02"E	6.51'
L2	N13°17'06"E	17.30'
L3	N15°30'25"E	27.43'
L4	N15°39'02"E	16.82'
L5	N13°32'44"E	14.16'
L6	N12°43'08"E	30.89'
L7	N13°08'06"E	32.91'
L8	N13°52'03"E	24.54'
L9	N08°42'11"E	43.82'
L10	N09°38'56"E	17.73'
L11	N09°38'56"E	9.34'
L12	N05°15'54"E	38.84'
L13	N04°14'43"E	10.39'
L14	N03°19'51"E	36.06'
L15	N01°35'20"E	10.71'
L16	N00°04'05"E	13.47'

DEED LINE DATA		
LINE #	DIRECTION	LENGTH
L1(D)	N12°39'31"E	6.76'
L2(D)	N12°46'37"E	17.11'
L3(D)	N15°10'26"E	27.26'
L4(D)	N13°20'37"E	16.92'
L5(D)	N13°07'25"E	14.16'
L6(D)	N12°59'36"E	30.96'
L7(D)	N13°04'44"E	32.90'
L8(D)	N13°00'53"E	24.46'
L9(D)	N09°11'57"E	43.76'
L10(D)	N09°29'30"E	17.87'
L11(D)	N09°21'12"E	9.20'
L12(D)	N05°12'39"E	38.95'
L13(D)	N03°38'41"E	10.26'
L14(D)	N03°24'49"E	36.01'
L15(D)	N02°32'28"E	11.30'
L16(D)	N00°03'17"W	13.09'

BOUNDARY CURVE DATA				
CURVE #	RADIUS	CENTRAL ANGLE	ARC	CHORD BEARING
C1	54.96'	80°11'46"	76.92'	S48°35'36"E

DEED CURVE DATA				
CURVE #	RADIUS	CENTRAL ANGLE	ARC	CHORD BEARING
C2(D)	55.00'	80°07'51"	76.92'	S48°35'34"E

LEGEND

- (CMF)CONCRETE MONUMENT FOUND
- (IRS) 5/8"IRON ROD SET (LB 6982)
- (IRF)IRON ROD FOUND
- (NDF)NAIL & DISK FOUND
- (IPF)IRON PIPE FOUND
- BOUNDARY LINE
- RIGHT-OF-WAY LINE
- (D) DEED DATA
- LB LICENSED BUSINESS
- PSM PROFESSIONAL SURVEYOR & MAPPER
- LS LICENSED SURVEYOR
- C# CURVE NUMBER (SEE CURVE TABLE)
- L# LINE NUMBER (SEE LINE TABLE)
- Limit of Moderate Wave Action (LIMWA)
- FEMA FLOOD LINE
- COASTAL HIGH HAZARD LINE (See note #22)

© ZNS ENGINEERING, L.C. THIS DOCUMENT IS PROTECTED BY SECTION 106 OF THE "UNITED STATES COPYRIGHT ACT". REPRODUCTION OR ALTERATION OF THIS DOCUMENT OR THE INFORMATION CONTAINED HEREON BY ANY MEANS WHATSOEVER IS STRICTLY PROHIBITED WITHOUT THE PRIOR WRITTEN CONSENT OF ZNS ENGINEERING, L.C. CONSENT IS HEREBY GRANTED SPECIFICALLY TO GOVERNMENTAL AGENCIES TO REPRODUCE THIS DOCUMENT IN COMPLIANCE WITH F.S. CHAPTER 119.

FLORIDA CERTIFICATE No. PSM 6809
DATE OF CERTIFICATION 01-14-2025

BY: KAVIN C. WILMOTT, P.S.M.

REVISION	BY	DATE

BOUNDARY & TOPOGRAPHIC SURVEY

OF

A PARCEL OF LAND

LOCATED IN

SECTION 26, TOWNSHIP 34 SOUTH, RANGE 17 EAST

MANATEE COUNTY, FLORIDA

ZNS ENGINEERING
Land Planning Engineering Surveying Landscape Architecture
EB 0027476 LB 0006982 LC 0000365
1023 MANATEE AVENUE WEST (7TH FLOOR), BRADENTON, FL 34205
E-MAIL [redacted] TELEPHONE 941 748 8080 FAX 941 748 3316

DRAWN BY DML FIELD BY BURKE JOB NO. 14257 FIELD DATE 12-16-2024 SCALE 1"=30' SHEET 01 OF 03

T:_2024\Old City Hall\45721\Survey\45721 Old City Hall.dwg, Prof, Date:1/13/2025 12:35 PM, By:Paige Estigarribia

Community Impact Report

COMPREHENSIVE PLAN MAP AMENDMENT
OLD CITY HALL SITE

COMMUNITY IMPACT REPORT

PREPARED BY
ZNS ENGINEERING

March 2026

INTRODUCTION

Manatee County and our client Amres Investments, LLC are proposing a Comprehensive Plan Future Land Use Map Amendment for the development of property located at 500 15th Street W, at the corner of Manatee Ave W and 15th Ave W in Bradenton, Florida. The PID number is 3354500109 (the "Property"). The Property is currently owned by Manatee County and is vacant. This Future Land Map amendment is proposed to allow for the development of a resilient, high density mixed-use multi-family and commercial development within the City of Bradenton's urban area and in line with Policy 1.1.1, the Comprehensive Plan's Guiding Principles for Urban Communities.

This Community Impact Report is part of an application for a Comprehensive Plan Future Land Use Map Amendment to change the future land use from UCBD (Urban Central Business District) to the UC (Urban Core) classification. This Community Impact Report provides an analysis of each of the required Community Impact review criteria.

A. VISUAL IMPACT ANALYSIS

The Property is approximately 3.70 +/- acres of vacant land located at 500 15th Street W, at the corner of Manatee Ave W and 15th Ave W in Bradenton, Florida, adjacent to Ware's Creek on the west. Across Manatee Avenue W, both a Presbyterian church, and Westminster Point Pleasant are located north of the Property. Westminster Point Pleasant is a multi-story senior living community also located on Ware's Creek.

The Bradenton Financial Center, a ten-story high-rise office and commercial building, is located directly east of the Property, across 15th Street W., and DeSoto Towers, a twelve-story apartment complex, is located directly south of the site, across 6th Avenue W. An aerial map of the subject site's location is included as Appendix 1 of this Report.

Visually, a multi-story mixed-use development is appropriate in this location and compatible with the existing, adjacent uses and buildings. The development would be located among existing multi-story structures within Bradenton's Urban Center. The Property is located within the City of Bradenton's T5 Transect Zone, so all applicable design standards for that zone will be followed, less any requested adjustments. Landscaping and buffering as required by the City's Land Use

Regulations will be included in the Site Plan Design. Current concept plans include various green space areas around the site to complement the mixed-uses. The proposed development will be a visual improvement to the existing vacant land.

B. LAND USE ASSESSMENT

The Applicant is requesting a Comprehensive Plan Map Amendment to change the designation from the City of Bradenton's UCBD (Urban Central Business District) classification to the UC (Urban Core) classification. The Property is within the City of Bradenton's Form Based Code T5 Transect Zone.

Existing Use
The Property is currently vacant land. Per historic aerials, a structure existed on the site as late as 2003, but the building was subsequently demolished. The 2006 historic aerials show the site as vacant, and it remains vacant today.

Existing Future Land Use: Urban Central Business District (UCBD)
The Property is currently assigned Urban Central Business District Future Land Use. Per the City's Comprehensive Plan, the Urban Central Business District is one of the most intensely developed areas of the City. This part of the City allows a mixture of uses compatible with urban core districts. The maximum allowable density in the UCBD is 40 du/a (50 du/a with moderate income housing bonus).

Existing Future Land Use: Neighboring Parcels
North: RESHIGH and UCBD
West: None (Ware's Creek)
South: UCBD
East: UC

Proposed Future Land Use: Urban Core (UC)
As per the City of Bradenton's Comprehensive Plan, the Urban Core is "located within the City of Bradenton's Urban Central Business District and provides the hub for economic development and civic uses." Uses include "offices, personal and professional services, commercial, retail, public and semi-public facilities, educational, institutional, restaurants, parks, recreation, and entertainment venues, and medium to high density residential." Also per the City's Comprehensive Plan, "[t]o foster the City's redevelopment efforts and enhancement of this mixed-use center, densities and intensities are increased within the Urban Core from those allowed in the UCBD category." The maximum Floor Area Ratio is 12.0, and the maximum Base Density is 60 du/acre, and up to 200 du/acre if approved by the City Council and meets the additional criteria outlined in the Comprehensive Plan.

This Comprehensive Plan Future Land Use Map Amendment proposes to change the Property's existing FLU from UCBD to UC. This change is necessary not only to support the revitalization effort in the downtown area but also to meet the City's need for residential units and desire for mixed-use variety within the City's downtown area.

Existing and proposed Future Land Use maps are included as Appendices 2 and 3 of this Report.

C. TRAFFIC STUDY

Please see the Transportation Study, included within this Report as Appendix 4.

D. ENVIRONMENTAL IMPACT ASSESSMENT

Please see the Environmental Study, included within this Report as Appendix 5.

E. AREA IMPACT ANALYSIS

The Property will remain compatible with the surrounding area with a Future Land Use update from Urban Central Business District to Urban Core. The site has been vacant for more than twenty years, and the proposed multi-story, multi-use development is consistent with the intent of the Urban Core Future Land Use designation regarding redevelopment and enhancement in the City's Urban Core. The Property presents an opportunity to redevelop a vacant infill site within the City's mixed-use center.

Logical Extension of UC
The Urban Core is located within the Urban Central Business District, and a Future Land Use Map amendment from UCBD to UC is reasonable for this site, given that the adjacent property on the east side of 15th Street W is currently designated in the UC district. Reassigning the subject site to the UC district is a logical extension of the UC district already assigned across the street.

Density Redevelopment Opportunity
Further, Policy 1.1.3 of the City's Comprehensive Plan provides, as Urban Center Principles, that the "City shall enhance the unique aspects of Downtown Bradenton and address emerging redevelopment opportunities…" based on the City's urban center design principles. The Comprehensive Plan describes the Urban Core as focused on enhancing the City's mixed-use center, and in support of that goal, the UC district allows for 60 du/a, and up to 200 du/a, with City Council's approval.

Under the UCBD designation, the Property has a 40 du/a density allowance, which yields 148 units maximum (40du/a * 3.70AC). Reassigning the subject site to the UC designation allows the applicant the opportunity to request additional density, in line with encouraging Downtown Bradenton redevelopment as described in the Comprehensive Plan. The current concept plan proposes 345 multi-family units, which is more than the 148 units allowed within the UCBD district, but falls well below the 740 maximum units potentially allowed in UC with City Council approval.

In addition to multi-family residential, the uses proposed on the Old City Hall site include a restaurant, offices, and a coffee shop, all of which are uses contemplated in the Comprehensive Plan within the UC district. Onsite parking as well as a pool, various amenity areas, a sky deck, and courtyard are all proposed for resident use. There is ample green space proposed on the Property, as well as a proposed public pedestrian park along Ware's Creek. This proposed mixed-

use project will provide a multi-use solution for transportation with an emphasis on pedestrian access and walkability, as encouraged by the Comprehensive Plan.

The proposed development on the Property is an excellent opportunity for infill redevelopment. The development provides for increased density in line with the City's goals for enhancing redevelopment efforts in Downtown Bradenton, and it also offers a variety of amenity areas onsite to support residents, as well as a public park and a mix of commercial uses for the benefit of public patrons visiting the site.

F. HURRICANE EVACUATION ANALYSIS

The site is located in Evacuation Zone A. Zone A residents are the first to evacuate during a hurricane or other natural disaster requiring evacuation.

A Local Development Agreement (LDA) is required as part of this Comprehensive Plan Map Amendment Application, and a Hurricane Mitigation Plan is included as part of that LDA. Accordingly, please see Draft Land Development Agreement Exhibit C "Hurricane Mitigation Plan," included with this Map Amendment Application.

Community Impact Report Appendix

AERIAL MAP

ZNS ENGINEERING
Land Planning Engineering Surveying Landscape Architecture
1023 MANATEE AVE WEST, 7TH FLOOR
BRADENTON, FL 34205
TELEPHONE 941 748 8080 FAX 941 748 3316

OLD CITY HALL SITE

SECTION 26, TOWNSHIP 34 SOUTH, RANGE 17 EAST
SCALE: 1" = 500'
SOURCE: MANATEE COUNTY

N

THIS MAP IS PROVIDED FOR GRAPHICAL REPRESENTATI
AND GENERAL REFERENCE ONLY THE DATA CONTAIN
HEREIN IS SUBJECT TO CHANGE AND IS NOT WARRANT

EXISTING FUTURE LAND USE MAP

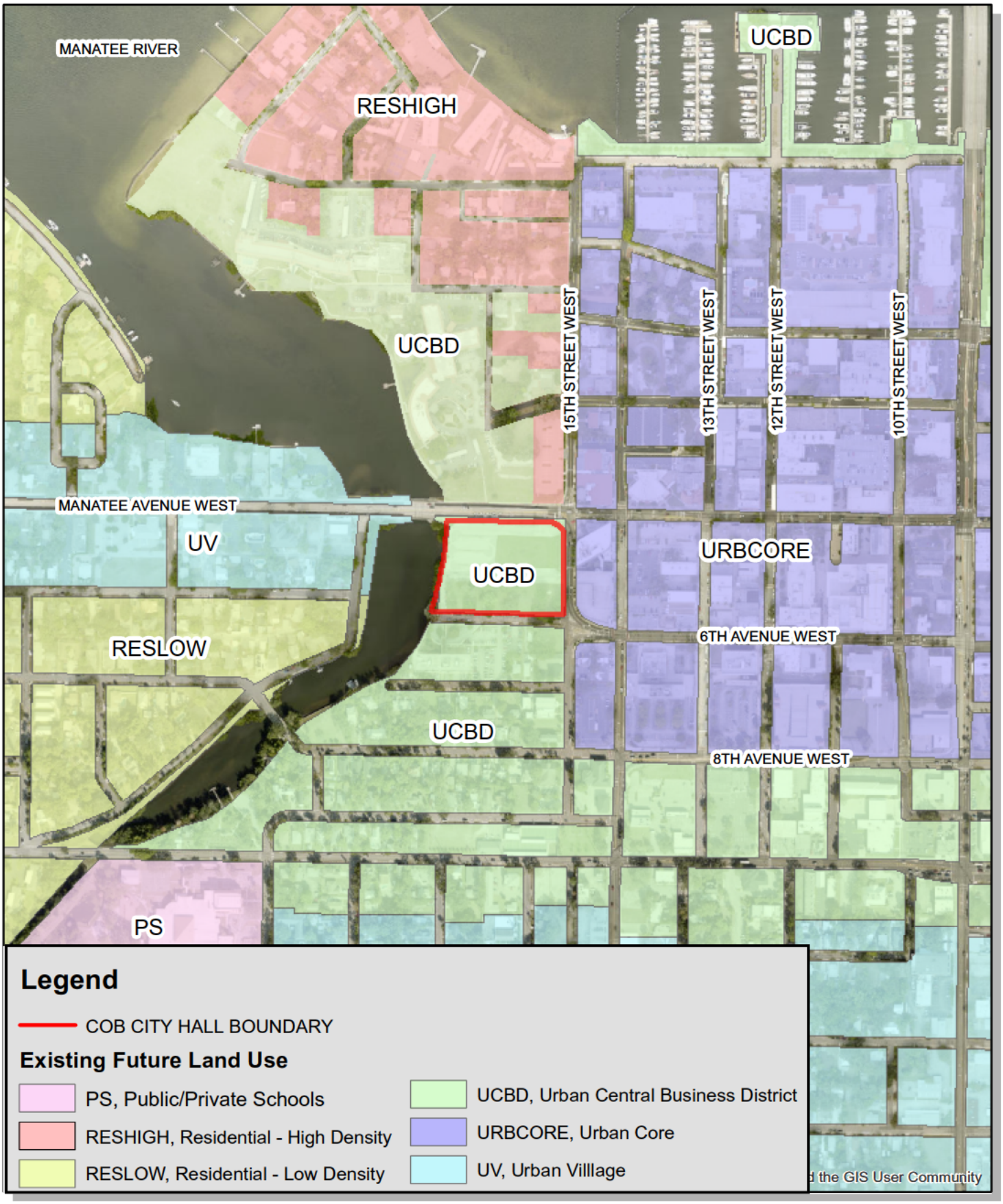

ZNS ENGINEERING
Land Planning Engineering Surveying Landscape Architecture
1023 MANATEE AVE WEST, 7TH FLOOR
BRADENTON, FL 34205
TELEPHONE 941 748 8080 FAX 941 748 3316

OLD CITY HALL SITE

SECTION 26, TOWNSHIP 34 SOUTH, RANGE 17 EAST
SCALE: 1" = 500'
SOURCE: MANATEE COUNTY

N

THIS MAP IS PROVIDED FOR GRAPHICAL REPRESENTATI
AND GENERAL REFERENCE ONLY. THE DATA CONTAIN
HEREIN IS SUBJECT TO CHANGE AND IS NOT WARRANT

PROPOSED FUTURE LAND USE MAP

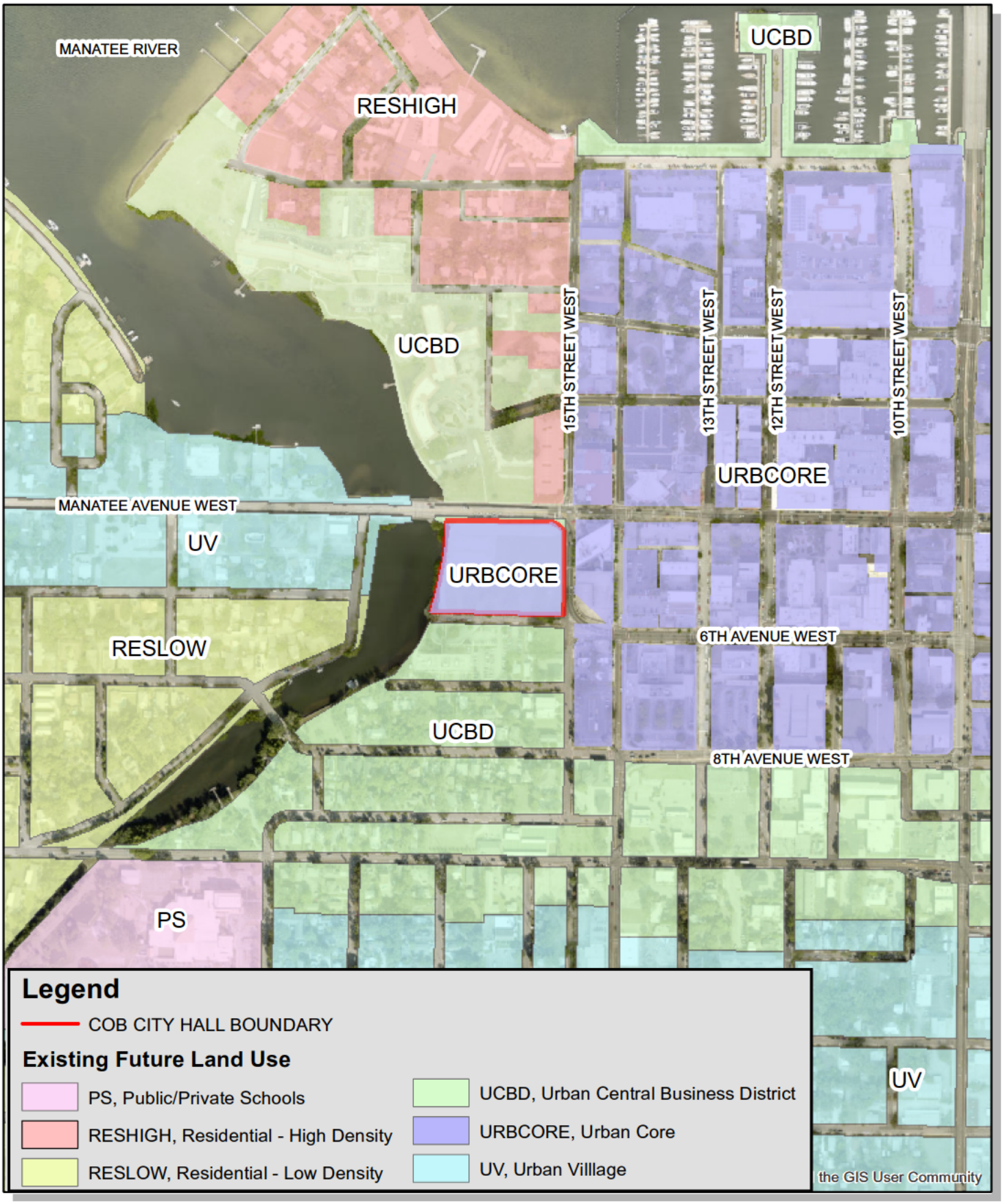

ZNS ENGINEERING
Land Planning Engineering Surveying Landscape Architecture
1023 MANATEE AVE WEST, 7TH FLOOR
BRADENTON, FL 34205
TELEPHONE 941 748 8080 FAX 941 748 3316

OLD CITY HALL SITE

SECTION 26, TOWNSHIP 34 SOUTH, RANGE 17 EAST
SCALE: 1" = 500'
SOURCE: MANATEE COUNTY

N

THIS MAP IS PROVIDED FOR GRAPHICAL REPRESENTATI
AND GENERAL REFERENCE ONLY. THE DATA CONTAIN
HEREIN IS SUBJECT TO CHANGE AND IS NOT WARRANT

March 5, 2026

Ms. Paige Estigarribia, AICP
Assistant Vice President/Director of Planning
ZNS Engineering
1023 Manatee Avenue West, 7th Floor
Bradenton, FL 34205

RE: Old City Hall – CPA
Folios: 3354500109
Palm Traffic Project T26018

Dear Ms. Estigarribia:

The proposed Comprehensive Plan Amendment is to amend the future land use from UCBD (3.7 acres) to UC District. The subject site is located south of SR 64 (Manatee Avenue) and west of 15th Street West, in the City of Bradenton, Manatee County, Florida, as shown in Figure 1. Under the existing UCBD, it is estimated the property could be developed for up to 148 multi-family dwelling units. Under the proposed UC district, it is estimated the property could be developed for up to 740 multi-family dwelling units. Based on data contained in the Institute of Transportation Engineers (ITE) Trip Generation Manual, 12th Edition, the amendment could result in a worst-case net increase of 1,734 average daily trip ends, as shown in Table 1.

A generalized link analysis was conducted for those roadways within the area of influence for the project:

- Manatee Avenue from Manning MHP to Joe Ebert Road.

Table 2 presents the results of the link analysis for the existing conditions. According to the results shown in the table, there is currently insufficient capacity on Manatee Avenue and 6th Avenue West. With the project traffic added to the existing traffic, it is estimated that Manatee Avenue and 6th Avenue West, within the vicinity of the project, should continue to operate at an unacceptable level of service. As shown in the evaluation, the proposed CPA will not create any additional roadway deficiencies. Because the roadways are located within the City's adopted TCEA, roadway level of service is not applicable.

Table 3 presents the results of the link analysis for the 2045 conditions. According to the results shown in the table, there may be insufficient capacity on Manatee Avenue/6th Avenue West to accommodate the 2045 background traffic. With the project traffic added to the 2045 background traffic, it is estimated that Manatee Avenue/6th Avenue West, within the vicinity of the project, may have insufficient capacity with the existing roadway. As shown in the evaluation, the proposed CPA will not create any additional roadway deficiencies. Because the roadways are located in the City's adopted TCEA, roadway level of service is not applicable.

Sincerely,

PALM TRAFFIC

Michael Yates
Principal

Figure 1. Project Location

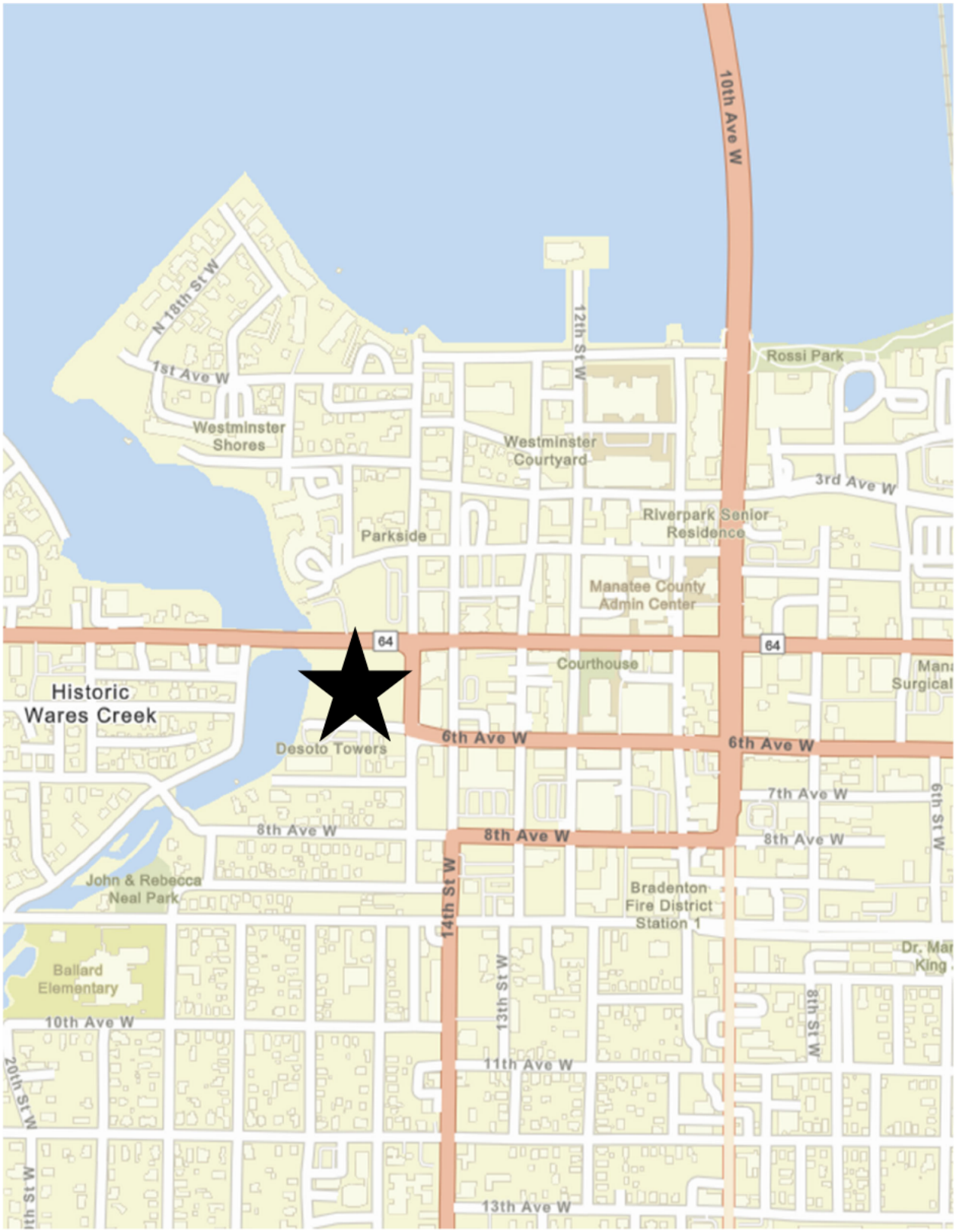

TABLE 1

ESTIMATED PROJECT TRIP ENDS

Scenario	Land Use	ITE LUC	Size	Daily Trip Ends (1)
UCBD	Multi-family	221	148 DU's	434
	Retail	822	5,005 SF	273
	Restaurant	932	2,003 SF	209
			UCBD Total	916
Proposed Development in UC	Multi-family	221	335 DU's	982
	Retail	822	5,005 SF	273
	Restaurant	932	2,003 SF	209
			Development Total	1,464
Difference Between UCBD and Proposed Development				548

(1) Source: ITE Trip Generation, 12th Edition, 2025.

Table 2. General Link Analysis – Existing Conditions

Roadway	From	To	LOS Standard	Lanes	Daily Capacity (1)	Existing Traffic (2)	Project Traffic (3)	Total Traffic	Available Capacity
Manatee Ave	26th St W	15th St W	D	4LD	38,300	49,000	780	49,780	-11,480
Manatee Ave	15th St W	9th St W	D	2L	22,980	23,000	956	23,956	-976
6th Ave W	15th St W	9th St W	D	2L	22,980	22,500	956	23,456	-476

(1) Source: FDOT Generalized Service Volume Tables

(2) Source: FDOT Historical Counts

(3) Difference between Future Lane Uses, see Table 1

Table 3. General Link Analysis – 2045 Conditions

Roadway	From	To	LOS Standard	Lanes	Daily Capacity (1)	2045 Traffic (2)	Project Traffic (3)	Total Traffic	Available Capacity
Manatee Ave	26th St W	15th St W	D	4LD	38,300	53,678	780	54,458	-16,158
Manatee Ave	15th St W	9th St W	D	2L	22,980	30,223	956	31,179	-8,199
6th Ave W	15th St W	9th St W	D	2L	22,980	27,238	956	28,194	-5,214

(1) Source: FDOT Generalized Service Volume Tables

(2) Source: 2045 Cost Affordable Model

(3) Difference between Future Land Uses, see Table 1

APPENDIX

APPENDIX

TRIP GENERATION

PERIOD SETTING

Analysis Name : Daily
Project Name : Old City Hall CPA **No :**
Date: 3/5/2026 **City:**
State/Province: **Zip/Postal Code:**
Country: **Client Name:**
Analyst's Name: **Edition:** Trip Generation Manual, 12th Ed

Land Use	Independent Variable	Size	Time Period	Method	Entry	Exit	Total
221 - Multifamily Housing (Mid-Rise) - 1 - Not Close to Rail Transit (Dense Multi-Use Urban)	Dwelling Units	148	Weekday	Average 2.93	217(1) 50%	217(1) 50%	434(1)
221 - Multifamily Housing (Mid-Rise) - Not Close to Rail Transit (Dense Multi-Use Urban)	Dwelling Units	740(0)	Weekday	Average 2.93	1084(1) 50%	1084(1) 50%	2168(1)

(0) indicates size out of range.
(1) indicates small sample size, use carefully.

TRAFFIC REDUCTIONS

Land Use	Entry Reduction	Adjusted Entry	Exit Reduction	Adjusted Exit
221 - Multifamily Housing (Mid-Rise) - 1	0 %	217	0 %	217
221 - Multifamily Housing (Mid-Rise)	0 %	1084	0 %	1084

INTERNAL TRIPS

221 - Multifamily Housing (Mid-Rise) - 1

Exit 217 Demand Exit: 0 % (0) Balanced: 0

Entry 217 Demand Entry: 0 % (0) Balanced: 0

221 - Multifamily Housing (Mid-Rise)

Demand Entry: 0 % (0) **Entry** 1084

Demand Exit: 0 % (0) **Exit** 1084

221 - Multifamily Housing (Mid-Rise) - 1

	Total Trips	Internal Trips		External Trips
		221 - Multifamily Housing (Mid-Rise)	Total	
Entry	217 (100%)	0 (0%)	0 (0%)	217 (100%)
Exit	217 (100%)	0 (0%)	0 (0%)	217 (100%)
Total	434 (100%)	0 (0%)	0 (0%)	434 (100%)

221 - Multifamily Housing (Mid-Rise)

	Total Trips	Internal Trips		External Trips
		221 - Multifamily Housing (Mid-Rise) - 1	Total	

Entry	1084 (100%)	0 (0%)	0 (0%)	1084 (100%)
Exit	1084 (100%)	0 (0%)	0 (0%)	1084 (100%)
Total	2168 (100%)	0 (0%)	0 (0%)	2168 (100%)

EXTERNAL TRIPS

Land Use	External Trips	Pass-by%	Pass-by Trips	Non-pass-by Trips
221 - Multifamily Housing (Mid-Rise) - 1	434	0	0	434
221 - Multifamily Housing (Mid-Rise)	2168	0	0	2168

ITE DEVIATION DETAILS

Weekday

Landuse — No deviations from ITE.

Methods — No deviations from ITE.

External Trips — 221 - Multifamily Housing (Mid-Rise) - 1 - Not Close to Rail Transit (Dense Multi-Use Urban)
ITE does not recommend a particular pass-by% for this case.

221 - Multifamily Housing (Mid-Rise) - Not Close to Rail Transit (Dense Multi-Use Urban)
ITE does not recommend a particular pass-by% for this case.

SUMMARY

Total Entering	1301
Total Exiting	1301
Total Entering Reduction	0
Total Exiting Reduction	0
Total Entering Internal Capture Reduction	0
Total Exiting Internal Capture Reduction	0
Total Entering Pass-by Reduction	0
Total Exiting Pass-by Reduction	0
Total Entering Non-Pass-by Trips	1301
Total Exiting Non-Pass-by Trips	1301

APPENDIX

FDOT GENERALIZED SERVICE VOLUME TABLES

C2T, C4, C5, & C6

Motor Vehicle Arterial Generalized Service Volume Tables

(C2T-Rural Town)

Peak Hour Directional

	B	C	D	E
1 Lane	*	720	940	**
2 Lane	*	1,140	1,640	**
3 Lane	*	2,120	2,510	**

Peak Hour Two-Way

	B	C	D	E
2 Lane	*	1,310	1,710	**
4 Lane	*	2,070	2,980	**
6 Lane	*	3,850	4,560	**

AADT

	B	C	D	E
2 Lane	*	13,800	18,000	**
4 Lane	*	21,800	31,400	**
6 Lane	*	40,500	48,000	**

(C4-Urban General)

	B	C	D	E
1 Lane	*	*	870	1,190
2 Lane	*	1,210	1,790	2,020
3 Lane	*	2,210	2,810	2,990
4 Lane	*	2,590	3,310	3,510

	B	C	D	E
2 Lane	*	*	1,580	2,160
4 Lane	*	2,200	3,250	3,670
6 Lane	*	4,020	5,110	5,440
8 Lane	*	4,710	6,020	6,380

	B	C	D	E
2 Lane	*	*	17,600	24,000
4 Lane	*	24,400	36,100	40,800
6 Lane	*	44,700	56,800	60,400
8 Lane	*	52,300	66,900	70,900

(C5-Urban Center)

	B	C	D	E
1 Lane	*	*	690	1,080
2 Lane	*	1,290	1,900	2,130
3 Lane	*	1,410	2,670	3,110
4 Lane	*	2,910	3,560	3,640

	B	C	D	E
2 Lane	*	*	1,250	1,960
4 Lane	*	2,350	3,450	3,870
6 Lane	*	2,560	4,850	5,650
8 Lane	*	5,290	6,470	6,620

	B	C	D	E
2 Lane	*	*	13,900	21,800
4 Lane	*	26,100	38,300	43,000
6 Lane	*	28,400	53,900	62,800
8 Lane	*	58,800	71,900	73,600

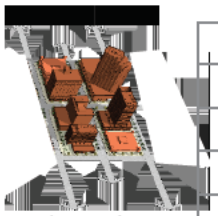

(C6-Urban Core)

	B	C	D	E
1 Lane	*	***	790	1,030
2 Lane	*	***	1,490	1,920
3 Lane	*	***	2,730	2,940
4 Lane	*	***	3,250	3,490

	B	C	D	E
2 Lane	*	***	1,440	1,870
4 Lane	*	***	2,710	3,490
6 Lane	*	***	4,960	5,350
8 Lane	*	***	5,910	6,350

	B	C	D	E
2 Lane	*	***	16,000	20,800
4 Lane	*	***	30,100	38,800
6 Lane	*	***	55,100	59,400
8 Lane	*	***	65,700	70,600

Adjustment Factors

The peak hour directional service volumes should be adjust by multiplying by 1.2 for one-way facilities
The AADT service volumes should be adjusted by multiplying 0.6 for one way facilities 2 Lane Divided Roadway with an Exclusive Left Turn Lane(s): Multiply by 1.05
2 lane Undivided Roadway with No Exclusive Left Turn Lane(s): Multiply by 0.80
Exclusive right turn lane(s): Multiply by 1.05
Multilane Undivided Roadway with an Exclusive Left Turn Lane(s): Multiply by 0.95
Multilane Roadway with No Exclusive Left Turn Lane(s): Multiply by 0.75
Non-State Signalized Roadway: Multiply by 0.90

This table does not constitute a standard and should be used only for general planning applications. The table should not be used for corridor or intersection design, where more refined techniques exist.
*Cannot be achieved using table input value defaults. **Not applicable for that level of service letter grade. For the automobile mode, volumes greater than level of service D become F because intersection capacities have been reached.
***LOS C thresholds are not applicable for C6 as C6 roadway facilities are neither planned nor designed to achieve automobile LOS C.

C2T, C4, C5, & C6

Motor Vehicle Arterial Generalized Service Volume Tables

Input Parameters

Roadway Characteristics

	C2T	C4	C5	C6
Number of Lanes (one direction)	1-3	1-4	1-4	1-4
Posted Speed (mph)	40	45	35	30
Facility Length (miles)	0.78	1.83	1.18	0.74
Number of Signals	4	9	9	7

Traffic Characteristics

	C2T	C4	C5	C6
Planning Analysis Hour Factor (K)	0.095	0.09	0.09	0.09
Directional Distribution Factor (D)	0.55	0.55	0.55	0.55
Peak Hour Factor (PHF)	0.92	0.95	0.95	0.95
Base Saturation Flow Rate	1,700	1,950	1,950	1,950
Heavy Vehicle Percent (%)	5	3	2	2
Lane Width	11	11	10	10
Median Type	Non Restrictive	Non Restrictive	Non Restrictive	Non Restrictive
Roadway Edge Type	Curb	Curb	Curb	Curb
On-Street Parking	50%	100%	100%	100%

Signal Characteristics

	C2T	C4		C5		C6	
Cycle Length	90	170		150		120	
Major Street Through g/c	0.47	0.52 (1,2,3 lanes)	0.47 (4 lanes)	0.55 (1,2,3 lanes)	0.48 (4 lanes)	0.52 (1,2,3 lanes)	0.46 (4 lanes)
Yellow Change Interval	4.4	4.8		4		3.7	
Red Change Interval	2	2		2		2	

APPENDIX

2045 FINANCIAL FEASIBLE PLAN

D1RPM2.1 2045 Cost Feasible Network AADT

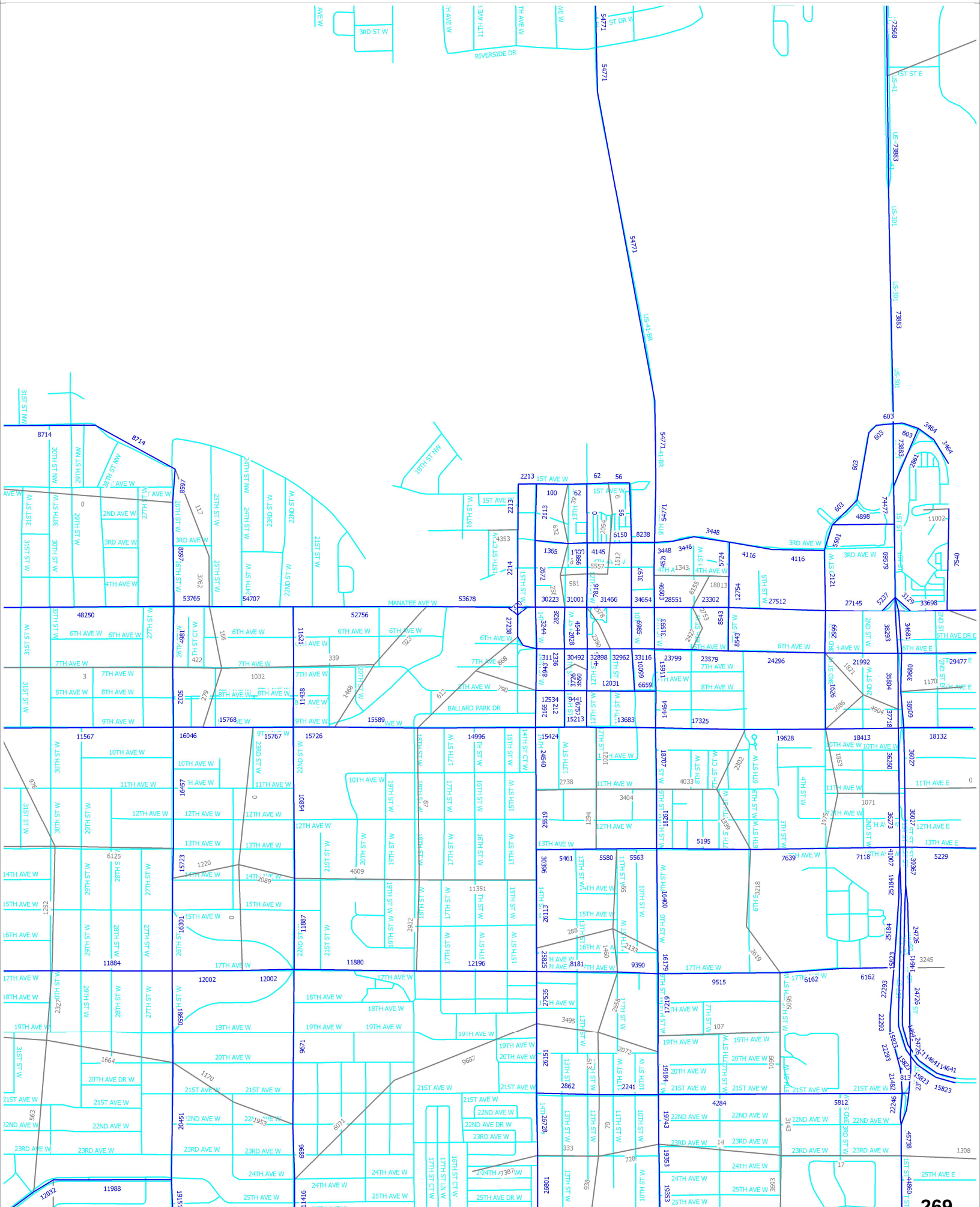

cube
(Licensed to TRAF-O-DATA CORP)

OLD CITY HALL

CITY OF BRADENTON
COMPREHENSIVE PLAN FUTURE LAND USE MAP AMENDMENT
ENVIRONMENTAL IMPACT ASSESSMENT

March 2026

Prepared by:
KIMLEY-HORN
1800 SECOND STREET, SUITE 900
SARASOTA, FL 34236

Kimley»Horn

INTRODUCTION

This report has been prepared on behalf of the applicant in support of a City of Bradenton Comprehensive Plan Future Land Use Map Amendment application. The Old City Hall site is approximately 3.68 acres in size and is located at the southwest corner of South of Manatee Avenue West & 15th Street West in Section 26, Township 34 South, Range 17 East in central Manatee County/the City of Bradenton. The site consists primarily of disturbed, open/vacant land.

METHODOLOGY

The following methods were employed to assess the referenced parcel:

- Field inspection of the site for evidence of wetlands, protected species, or other sensitive environmental features.
- Recent and historical aerial photograph interpretation of the subject property.
- Review of the National Wetlands Inventory (NWI) maps.
- Review of the Natural Resources Conservation Services (NRCS) Web Soil Survey for Manatee County, Florida and documentation of the soil characteristics on site.
- Research of Manatee County, and various State and Federal databases regarding protected wildlife species.

EXISTING CONDITIONS

Wetland, upland, and other surface water habitats within the project area are categorized below using the Florida Department of Transportation "Florida Land Use, Cover and Forms Classification System (FLUCCS)" as shown on the 'FLUCCS Habitat Map' (attached).

Description of On-Site Habitats:

A. Wetland and Other Surface Water Habitats

FLUCCS CODE 612, Mangrove Swamps (± 0.01 Acres)

There is a small, disturbed, wetland on the landward side of the existing seawall near the southern property boundary where white mangroves (*Laguncularia racemosa*), red mangroves (*Rhizophora mangle*), salt grass (*Distichlis spicata),* and shoreline purslane (*Sesuvium portulacastrum*) have recruited, likely due to the failing shoreline stabilization infrastructure.

B. Upland Habitats

FLUCCS Code 190, Open Land (± 3.67 Acres)

The project area consists mainly of mowed and maintained open land dominated by bermudagrass *(Cynodon dactylon)* and St. Augustine's grass *(Stenotaphrum secundatum)* and other weedy ruderal species, and a concrete pad associated with the Old City Hall building.

Soils

According to the current Natural Resources Conservation Service (NRCS) web soil survey (http://websoilsurvey.nrcs.usda.gov/app/WebSoilSurvey.aspx) for Manatee County, there is tone (1) soil type is found within the project boundary. Hydric and non-hydric soil designations are based on the Hydric Soils of Florida Handbook published in March 2000. The soil type found on site is:

Kimley»Horn

20 – EauGallie, EauGallie Wet fine sands, 0 to 2 percent slopes (Hydric)

LISTED SPECIES

Kimley-Horn has reviewed the subject property for the potential presence of listed species. This review included a field survey and research of available databases for documented listed species presence relative to the proposed project. Recent on-site evaluations occurred in March 2026.

To assist in determining potential utilization of the subject parcel by listed species, a search of available databases was conducted, including review of the Florida Native Areas Inventory (FNAI) and Audobon Society EagleWatch bald eagle nest locator databases. These database searches revealed no documented utilization of the project area or areas adjacent to the project area by listed species. The subject parcel is not within any bald eagle nest protection zones.

In addition to the database searches, scientists with Kimley-Horn have performed numerous field surveys of the project. The most recent field survey was conducted by Chris Kennedy in March 2026. No protected species were observed nesting or denning within the onsite habitats. Methodology utilized to evaluate the site for gopher tortoise was consistent with FFWCC Gopher Tortoise Permitting Guidelines Appendix 4.

Given the habitats present and the results of the recent listed species review, significant utilization by listed species is not anticipated, but if listed species are found during construction, appropriate measures will be taken with State and Federal regulatory agencies.

FNAI Biodiversity Matrix

In addition to the previous listed species evaluations conducted at the site, the FNAI Biodiversity Matrix was consulted to determine documented, likely, and/or potentially occurring rare animals in the vicinity of the project area. The most "likely" species to occur in the vicinity of the project, as listed by FNAI (Matrix Unit 23668), is the Wood Stork (*Mycteria americana*).

The table on the following page lists both the species that are likely and or have the potential to utilize the project area and the results of field surveys.

Common Name	Scientific Name	Federal/State Status	Likelihood of Occurrence	Results of Field Surveys
Bald Eagle	*Haliaeetus leucocephalus*	Migratory Bird/X	Potential (FNAI)	No nests identified.
Eastern Indigo Snake	*Drymarchon couperi*	T/T	Potential (FNAI)	Not Observed
Florida Manatee	*Trichechus manatus latirostris*	T/N	Potential (FNAI)	Not Observed
Gopher Tortoise	*Gopherus polyphemus*	X/T	Potential (FNAI)	No potentially active burrows identified.

Hawksbill Sea Turtle	*Eretmochelys imbricata*	E/FE	Potential (FNAI)	Not Observed
Leatherback Sea Turtle	*Dermochelys coriacea*	E/FE	Potential (FNAI)	Not Observed
Wood Stork	*Mycteria americana*	E/T	Likely (FNAI)	Not Observed

Bald Eagle (Haliaeetus leucocephalus)
A search of the Audobon Florida EagleWatch bald eagle nest database was completed to determine if any known bald eagle nests occur within the vicinity of the subject parcel. The database revealed that no known bald eagle nest is located within 660 feet of the parcel; the nearest FWC documented bald eagle nest (MN077) is located 0.51 miles southeast of the project area. No bald eagle nests were observed within 660 feet of the parcel during the field review; therefore, the project is not within any bald eagle protection zones and impacts to this species are not anticipated.

Eastern Indigo Snake (*Drymarchon couperi*)
The eastern indigo snake occurs in a range of habitats, including pine flatwoods, scrubby flatwoods, high pine, dry prairie, tropical hardwood hammocks, edges of freshwater marshes, agricultural fields, coastal dunes, and human-altered habitats. The indigo snake requires large tracts of land to survive and often winters in burrows of gopher tortoises, armadillos, cotton rats, and land crabs (in coastal areas) and forages in more hydric habitats. The eastern indigo snake is listed as "Threatened" by both the USFWS and FWC. According to FNAI data, potential habitat for the eastern indigo snake may be present within the project area. During the field reviews and wetland evaluations, no eastern indigo snakes were observed within or adjacent to the project area. The project will likely implement the USFWS '*Standard Protection Measures for the Eastern Indigo Snake*' (revised August 12, 2013) to prevent any adverse impacts to this species.

Gopher Tortoise (*Gopherus polyphemus*)
The gopher tortoise is a burrowing tortoise that inhabits dry, well-drained, sandy soils in upland habitats like longleaf pine sandhills, oak hammocks, pine flatwoods, coastal dunes, and open sandy pastures. Kimley-Horn scientists conducted a preliminary survey of the potential gopher tortoise habitat on March 2nd 2026. During this survey, no evidence of gopher tortoise or burrows was observed. Due to the lack of suitable foraging habitat on the site, a pre-construction gopher tortoise survey should not be necessary. Should any gopher tortoise burrows be found in or within 25' of the limits of clearing prior to construction, a relocation permit from FWC will be obtained to remove all gopher tortoises within the project area.

Hawksbill Sea Turtle (*Eretmochelys imbricate*)
The hawksbill sea turtle is listed as "Endangered" by the USFWS and is the rarest sea turtle that regularly occurs in Florida. Hawksbills frequent rocky areas, coral reefs, shallow coastal areas, lagoons or oceanic islands, and narrow creeks and passes. They are seldom seen in water deeper than 65 feet. Hatchlings are often found floating in masses of sea plants, and nesting may occur on almost any undisturbed deep-sand beach within the tropical extent of its range. There is no potential nesting habitat within or adjacent to the project area, therefore no adverse impacts to

Kimley»Horn

this species are not anticipated.

Leatherback Sea Turtle (Dermochelys coriacea))
The leatherback sea turtle is listed as "Endangered" by the USFWS and is the largest turtle in the world with the widest global distribution. Leatherbacks undertake the longest migrations between breeding and feeding areas of any sea turtle and nest on tropical or subtropical wide, open, sandy beaches with deep, soft sand and access to deep water. There is no potential nesting habitat within or adjacent to the project area, therefore no adverse impacts to this species are not anticipated.

Wood Stork (*Mycteria americana*) and Wading Birds
Wood storks inhabit hardwood swamps, sloughs, mangroves, and cypress wetlands, feeding on small fish, crayfish, and small vertebrates. Breeding occurs from late November to early March, where individuals nest in colonies often consisting of 100 to 500 nests constructed in trees situated in standing water. The wood stork is listed as "Endangered" by the USFWS. The project is within the Core Foraging Area (CFA) of several wood stork nesting colonies, the closest of which is the Ayers Point rookery located approximately 3.12 miles east of the project area near the mouth of the Braden River. There is no evidence of nesting by wood storks or any other state-listed wading birds within or adjacent to the project area, therefore impacts to these species are not anticipated.

WETLAND AND SURFACE WATER IMPACTS
In total, the project proposes to impact 0.04 acres of wetlands associated with the reconstruction of the seawall as depicted on the attached Wetland and OSW Impact Map. The seawall is currently in disrepair and will need to be redesigned and reconstructed to minimize flooding. The wetlands proposed to be impacted have been previously impacted/disturbed by the historical shoreline alteration and exhibit reduced values and function as a result these historic impacts.

Mitigation will be determined pursuant to the Uniform Mitigation Assessment Method (UMAM), Chapter 62-345 of the Florida Administrative Code and will be provided through the purchase of mitigation bank credits consistent with the state and federal permits for the project.

If you have any questions, or if we can provide any additional information, please do not hesitate to contact me at [redacted] or [redacted]

Sincerely,

Chris Kennedy
Environmental Scientist

1018 Thomasville Road
Suite 200-C
Tallahassee, FL 32303
850-224-8207
850-681-9364 fax
www.fnai.org

Florida Natural Areas Inventory

Biodiversity Matrix Query Results

UNOFFICIAL REPORT

Created 3/3/2026

(Contact the FNAI Data Services Coordinator at [redacted] or [redacted] for information on an official Standard Data Report)

NOTE: The Biodiversity Matrix includes only rare species and natural communities tracked by FNAI.

Report for 2 Matrix Units: 23668 , 23918

Descriptions

DOCUMENTED - There is a documented occurrence in the FNAI database of the species or community within this Matrix Unit.

DOCUMENTED-HISTORIC - There is a documented occurrence in the FNAI database of the species or community within this Matrix Unit; however the occurrence has not been observed/reported within the last twenty years.

LIKELY - The species or community is *known* to occur in this vicinity, and is considered likely within this Matrix Unit because:

1. documented occurrence overlaps this and adjacent Matrix Units, but the documentation isn't precise enough to indicate which of those Units the species or community is actually located in; *or*
2. there is a documented occurrence in the vicinity and there is suitable habitat for that species or community within this Matrix Unit.

POTENTIAL - This Matrix Unit lies within the known or predicted range of the species or community based on expert knowledge and environmental variables such as climate, soils, topography, and landcover.

Matrix Unit ID: 23668

0 **Documented** Elements Found

0 **Documented-Historic** Elements Found

1 **Likely** Element Found

Scientific and Common Names	Global Rank	State Rank	Federal Status	State Listing
Mycteria americana Wood Stork	G4	S2	T	FT

Matrix Unit ID: 23918

0 **Documented** Elements Found

0 **Documented-Historic** Elements Found

0 **Likely** Elements Found

Matrix Unit IDs: 23668 , 23918

14 **Potential** Elements Common to Any of the 2 Matrix Units

Scientific and Common Names	Global Rank	State Rank	Federal Status	State Listing
Acipenser oxyrinchus desotoi Gulf Sturgeon	G3T2T3	S2?	T	FT
Calopogon multiflorus many-flowered grass-pink	G2G3	S2S3	N	T
Charadrius melodus Piping Plover	G3	S2	T	FT
Dermochelys coriacea Leatherback Sea Turtle	G2	S2	E	FE
Drymarchon couperi Eastern Indigo Snake	G3	S2?	T	FT
Eragrostis pectinacea var. tracyi Sanibel lovegrass	G5T1	S1	N	E
Eretmochelys imbricata Hawksbill Sea Turtle	G3	S1	E	FE
Gopherus polyphemus Gopher Tortoise	G3	S3	C	ST
Lechea cernua nodding pinweed	G3	S3	N	T
Lithobates capito Gopher Frog	G2G3	S3	N	N
Nemastylis floridana celestial lily	G2	S2	N	E
Rallus longirostris scottii Florida Clapper Rail	G5T3?	S3?	N	N
Setophaga discolor paludicola Florida Prairie Warbler	G5T3	S3	N	N
Trichechus manatus latirostris Florida Manatee	G2G3T2	S2S3	T	N

Disclaimer

The data maintained by the Florida Natural Areas Inventory represent the single most comprehensive source of information available on the locations of rare species and other significant ecological resources statewide. However, the data are not always based on comprehensive or site-specific field surveys. Therefore, this information should not be regarded as a final statement on the biological resources of the site being considered, nor should it be substituted for on-site surveys. FNAI shall not be held liable for the accuracy and completeness of these data, or opinions or conclusions drawn from these data. FNAI is not inviting reliance on these data. Inventory data are designed for the purposes of conservation planning and scientific research and are not intended for use as the primary criteria for regulatory decisions.

Unofficial Report

These results are considered unofficial. FNAI offers a Standard Data Request option for those needing certifiable data.

Folder: C:\Users\garret.denise\OneDrive - KHDocuments\GIS_Working\AMCO Old City Hall\GIS\Maps\AMCO_City_Hall_ArcPro\

Kimley»Horn

© 2026 Kimley-Horn and Associates, Inc.

1800 2nd Street, Suite 900, Sarasota, FL 34236
Phone (941) 379 - 7600
www.kimley-horn.com

Project Location Map

Old City Hall
Manatee County, Florida

1 IN = 500 FT	PROJECT NUMBER: 249046008	MARCH 2, 2026

Folder: C:\Users\garret.denise\OneDrive - KHA\Documents\GIS_Working\AMCO Old City Hall\GIS\Maps\AMCO_City_Hall_ArcPro\

Kimley»Horn

© 2026 Kimley-Horn and Associates, Inc.

1800 2nd Street, Suite 900, Sarasota, FL 34236
Phone (941) 379 - 7600
www.kimley-horn.com

USGS Quadrangle Map

Old City Hall
Manatee County, Florida

1 IN = 300 FT	PROJECT NUMBER: 249046008	MARCH 2, 2026	FIGURE 2

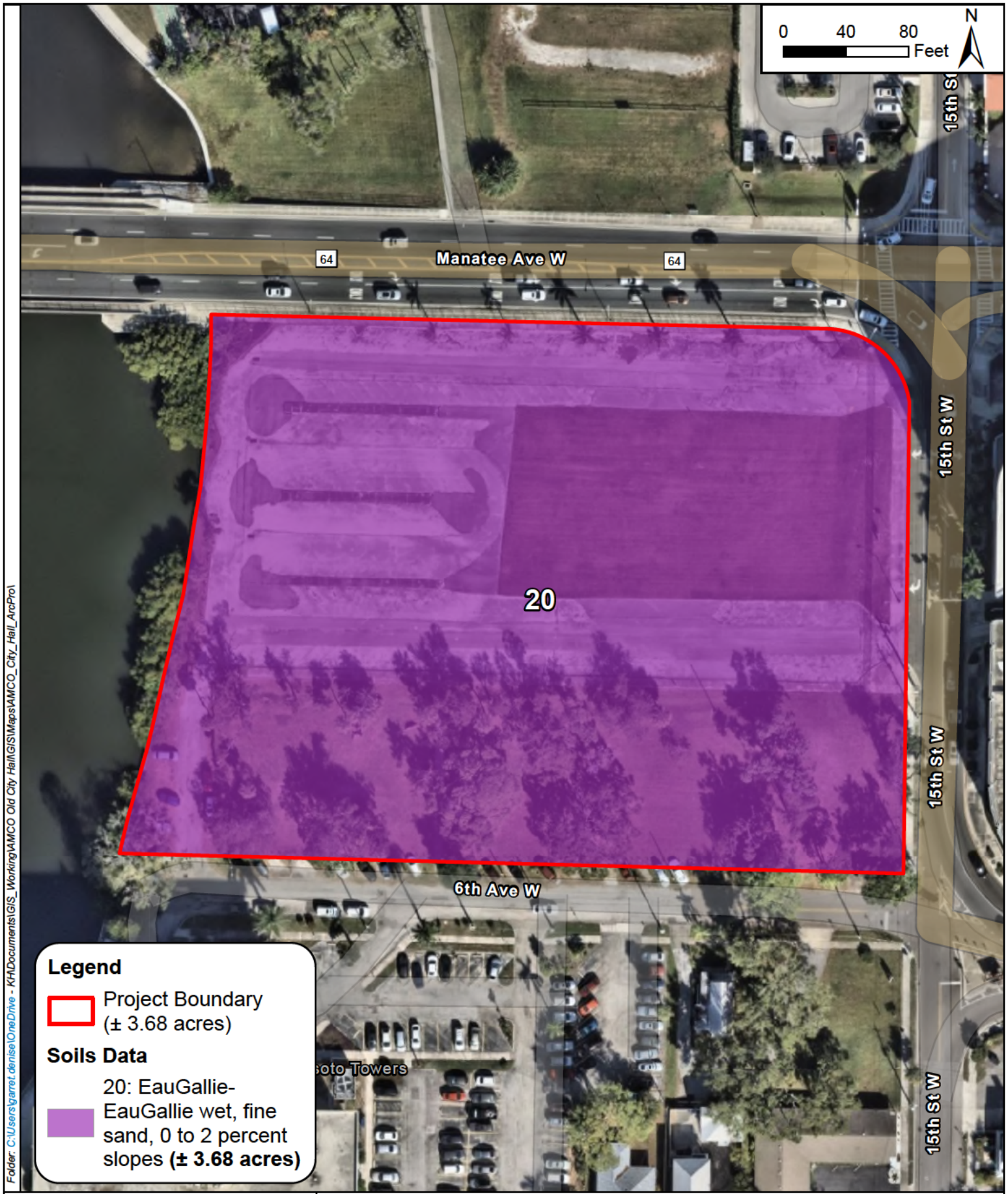

Folder: C:\Users\garret.denise\OneDrive - KHDocuments\GIS_Working\AMCO Old City Hall\GIS\Maps\AMCO_City_Hall_ArcPro\

Kimley»Horn

© 2025 Kimley-Horn and Associates, Inc.

1800 2nd Street, Suite 900, Sarasota, FL 34236
Phone (941) 379 - 7600
www.kimley-horn.com

NRCS Soils Classification Map

Old City Hall
Manatee County, Florida

1 IN = 80 FT	PROJECT NUMBER: 249046008	MARCH 2, 2026	

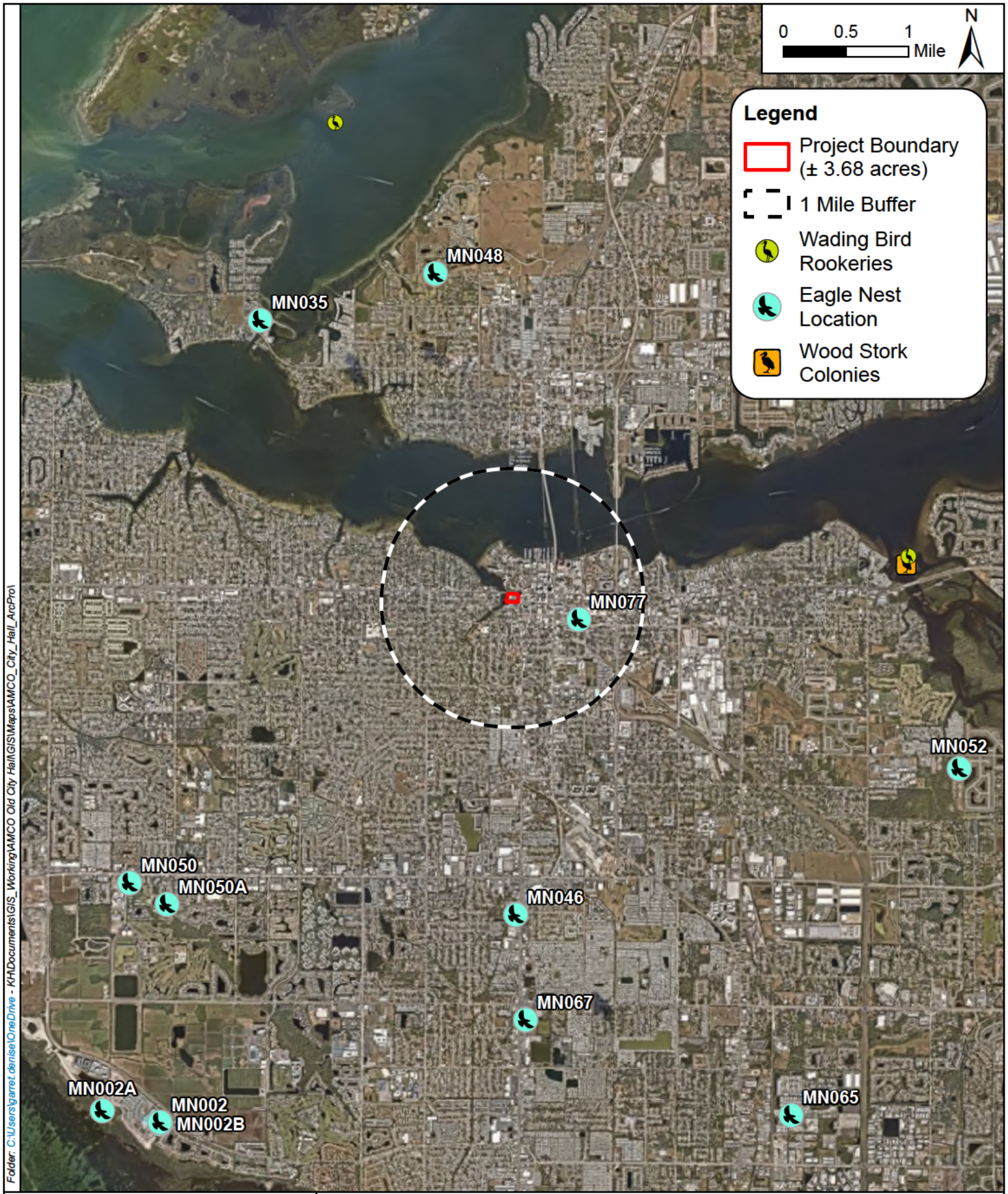

Folder: C:\Users\garret.denise\OneDrive - KHA\Documents\GIS_Working\AMCO Old City Hall\GIS\Maps\AMCO_City_Hall_ArcPro\

Kimley»Horn
© 2026 Kimley-Horn and Associates, Inc.
1800 2nd Street, Suite 900, Sarasota, FL 34236
Phone (941) 379 - 7600
www.kimley-horn.com

Listed Species Map

Old City Hall
Manatee County, Florida

1 IN = 1 MILE	PROJECT NUMBER: 249046008	MARCH 2, 2026	

FLUCFCS Code	Description	± Acreage
190	Open Land	3.67
612	Mangrove Swamp	0.01
	Total Project Acreage	3.68

Folder: C:\Users\garret.denise\OneDrive - KHDocuments\GIS_Working\AMCO Old City Hall\GIS\Maps\AMCO_City_Hall_ArcPro\

Kimley»Horn

© 2026 Kimley-Horn and Associates, Inc.
1800 2nd Street, Suite 900, Sarasota, FL 34236
Phone (941) 379 - 7600
www.kimley-horn.com

Florida Land Use Covers & Forms Classification System Map

Old City Hall
Manatee County, Florida

1 IN = 80 FT	PROJECT NUMBER: 249046008	MARCH 2, 2026	

Folder: C:\Users\garret.denise\OneDrive - KHDocuments\GIS_Working\AMCO Old City Hall\GIS\Maps\AMCO_City_Hall_ArcPro\

Kimley»Horn

© 2026 Kimley-Horn and Associates, Inc.
1800 2nd Street, Suite 900, Sarasota, FL 34236
Phone (941) 379 - 7600
www.kimley-horn.com

1984 Historical Imagery Map

Old City Hall
Manatee County, Florida

1 IN = 100 FT	PROJECT NUMBER: 249046008	MARCH 2, 2026	

Folder: C:\Users\garret.denise\OneDrive - KHDocuments\GIS_Working\AMCO Old City Hall\GIS\Maps\AMCO_City_Hall_ArcPro\

Kimley»Horn

© 2026 Kimley-Horn and Associates, Inc.
1800 2nd Street, Suite 900, Sarasota, FL 34236
Phone (941) 379 - 7600
www.kimley-horn.com

Wetland Impact Map

Old City Hall
Sarasota County, Florida

1 IN = 80 FT	PROJECT NUMBER: 249046008	MARCH 2, 2026	

Conceptual Plan

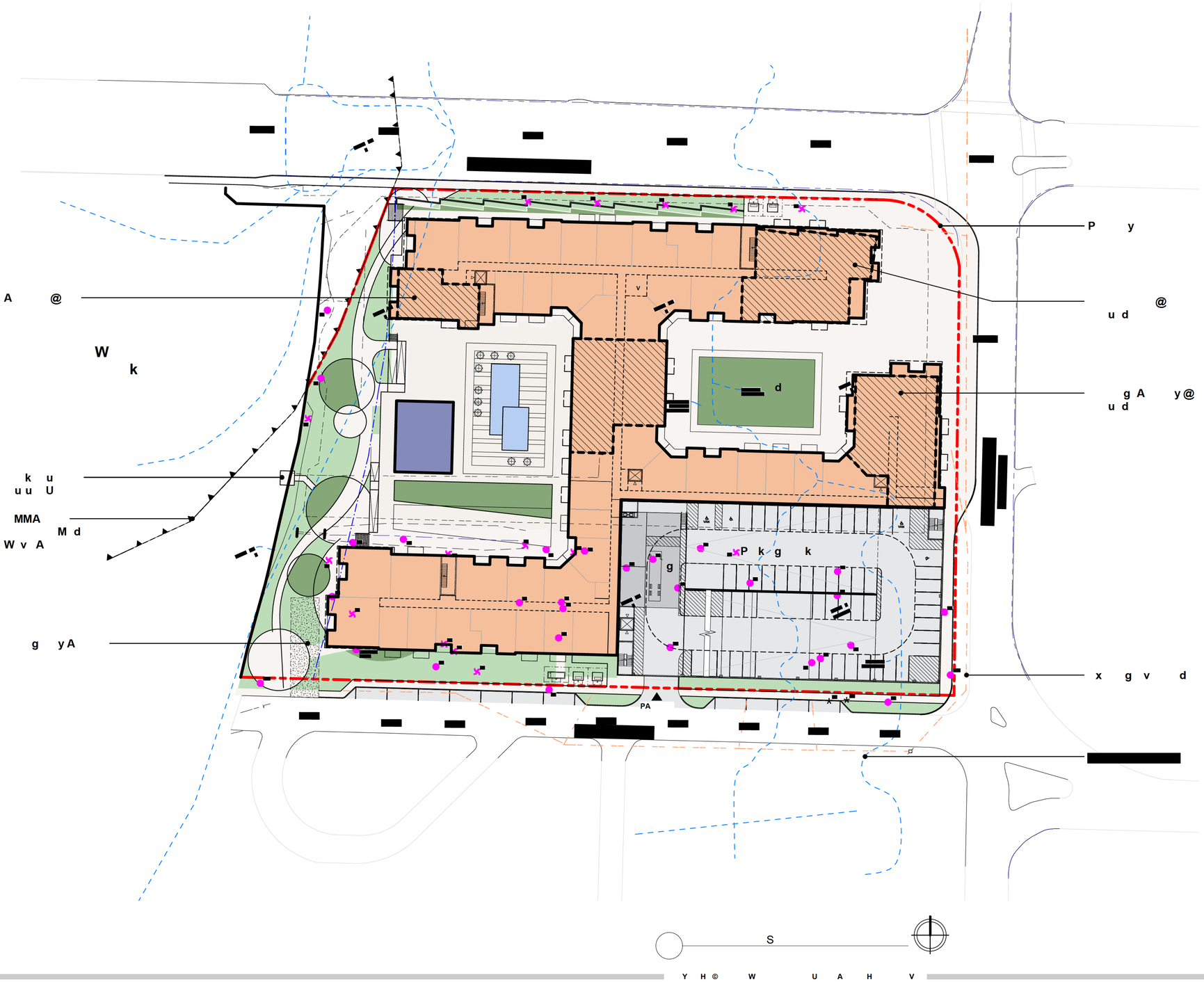

U H U

B	MU				
B	M U				
B	MU				
B	M U				
B	MU				
A				%	9

		A	A A
	8	2	2
2	2	0	2
3	2	0	2
	2	0	2
	2	0	2
	2	0	2
A			=

2 = 2
0 0 3

Y H © W U A H V

dwell design studio

U A

V P

ALLEN MORRIS COMPANY

P

MANATEE A E

B

U M

A

H M

S

H U B

Ac00 11

285

Draft Land Development Agreement

DEVELOPMENT AGREEMENT

THIS DEVELOPMENT AGREEMENT (the "**Development Agreement**") is made and entered as of this __ day of _____, 2026, by and between **CITY OF BRADENTON**, a Florida municipality, whose address is 101 Old Main Street West, Bradenton, Florida 34205, (the "**CITY**") and **AMRES INVESTMENTS, LLC,** a Florida limited liability company, whose mailing address is 121 Alhambra Plaza, Suite 1600, Coral Gables, Florida 33134 (the "**LANDOWNER**").

WITNESSETH:

WHEREAS, Landowner intends to redevelop vacant property located adjacent to Ware's Creek at 500 15th Street West, Bradenton, Florida 34205; and

WHEREAS, Landowner will hold legal and equitable title to 3.70 acres (the "Property") which Property is more particularly described in Exhibit "A", and

WHEREAS, the City and the Landowner are collectively the "Parties" to this Development Agreement; and

WHEREAS, the Landowner is requesting an amendment to the Property's Future Land Use Classification, per the City's Comprehensive Plan ("Comprehensive Plan") from Urban Central Business District to Urban Core which allows for a maximum density of 200 EDU's per acre if approved by the City Council; however, the Landowner is not requesting the maximum density; and

WHEREAS, on March 6, 2026, the Landowner submitted an application for a Comprehensive Plan Amendment, including both map and text amendment. The proposal submitted by the Landowner would change the Future Land Use classification to Urban Core, which would authorize a total of 780 EDUs on the Property; and

WHEREAS, the Landowner is seeking approval for a mixed-use development including approximately 345 EDUs together with office and retail; and

WHEREAS, the Landowner has disclosed to the City staff, the City Attorney, and the City Council that the proposed project will be developed in phases over an extended period of time; and

WHEREAS, the City Council acknowledges that the above-referenced disclosure has been made; and

WHEREAS, since a portion of the Property is located within the Coastal High Hazard Area, the Landowner is required to address hurricane evacuation criteria for the adopted level of service as measured on the Saffir-Simpson Scale for a Category 5 storm as set forth in §163.3178(8)(a), Florida Statutes; and

DRAFT

WHEREAS, Section 163.3178(8)(a)3., Florida Statutes, requires that a local government and developer enter into a binding agreement to memorialize the mitigation plan for any increase of density in the Coastal High Hazard Area; and

WHEREAS, Policy 5.3.1.2 as adopted in Ordinance 4035 requires that the Development Agreement include a conceptual site plan (the "Conceptual Site Plan") and any required mitigation plan for hurricane evacuation, consistent with Section 163.3178(8)(a), Florida Statutes; and

WHEREAS, it is the intent of Landowner, in good faith, to enter into this binding development agreement whereby Landowner shall commit to appropriate hurricane mitigation in the event of a category 5 storm event as measured on the Saffir-Simpson Scale as set forth in Section 163.3178(8)(a); and

WHEREAS, the Landowner has committed that all new buildings constructed on the Property will meet federal, state and local construction standards which will mitigate impacts of these facilities due to a storm event; and

NOW, THEREFORE, in consideration of the mutual promises and covenants contained herein, the parties hereby agree as follows:

1. **Recitals True and Correct.** The Recitals set forth above are true and correct and are incorporated by reference as if fully set forth herein.

2. **Description of the Development**. The Property shall be developed in substantial compliance with the Conceptual Site Plan attached hereto as Exhibit "B" (the "Project"). The Conceptual Site Plan is subject to the following:

(a) Based upon the existing acreage (3.7 acres), 345 EDUs may be constructed on the Property together with office and retail. The units may be located within the CHHA portions of the Property.

(b) The Project will include infrastructure repair and redevelopment including without limitation the seawalls along Wares Creek. The City acknowledges and agrees to these repairs and their impacts.

(c) The Project will include development of a park on the western portion of the Property fronting Wares Creek (the "Park"). Upon completion of the development of the Park, ownership of the Park will be transferred to the City for public use. The City agrees and acknowledges that it will accept conveyance of the Park and at said conveyance, the City agrees to assume all liability for the Park. Landowner agrees to continue to maintain the Park after the conveyance.

(d) Notwithstanding the foregoing, the Landowner acknowledges and agrees that the development of the Project as described herein shall require additional development approvals, including without limitation, site improvement permit(s) and building permits, and nothing contained in this Development Agreement shall be deemed an authorization of any future required approvals. The Project shall be subject to all applicable development standards.

3. **Ownership of Land Subject to Development Agreement**. A legal description of the land subject to this Development Agreement (i.e., the Property) is attached hereto as Exhibit "A". The current legal and equitable owner and developer of the Property is Manatee County.

4. **Disclaimer of Joint Venture**. Landowner and City represent that by the execution of this Development Agreement, it is not the intent of the Parties of this Development Agreement be construed or deemed to represent a joint venture, undertaking between City or Landowner, or either with any third party. While engaged in carrying out and complying with the terms of this Development Agreement, Landowner is an independent principal and not a contractor or an officer or employee of the City, and Landowner shall not at any time or in any manner represent that it or any of its agents or employees are employees of the City.

5. **Successors in Interest**. The obligations of this Development Agreement shall be binding upon, and the benefits shall inure to, all successors in interest to the Parties to the Development Agreement including all mortgagees for the Property. Notwithstanding anything in this Development Agreement to the contrary, the City shall have no responsibility or liability for any obligations of Landowner under this Development Agreement other than as set out in Section 2(c) of this Development Agreement

6. **Amendments**. All amendments to this Development Agreement, including any such amendments extending the term of the Development Agreement, shall be ineffective unless reduced to writing, approved by the City Council, and executed by the City and Landowner.

7. **Recording of this Agreement**. The Landowner shall record this Development Agreement in the Public Records of Manatee County and provide the original recorded Development Agreement to the City no later than fourteen (14) days after the execution of this Development Agreement by all Parties. Landowner shall bear the expense of recording this Development Agreement.

8. **Applicable Law and Venue**. This Development Agreement shall be construed, and the rights and obligations of the Parties hereunder shall be determined, in accordance with the laws of the State of Florida. Venue for any litigation pertaining to the subject matter hereof shall be exclusive in Manatee County, Florida, unless prohibited by law.

9. **Severability**. In the event any term or provision of this Development Agreement shall be held invalid by a court of competent jurisdiction, such invalid term or provision will not affect the validity of any other term or provision hereof; and all such terms and provisions hereof shall be enforceable to the fullest extent permitted by law as if such invalid term or provision had never been part of this Development Agreement; provided, however, if any term or provision of this Development Agreement is held to be invalid due to the scope or extent thereof, then, to the extent permitted by law, such term or provision shall be automatically deemed modified in order that it may be enforced to the maximum scope and extent permitted by law.

10. **Entire Agreement**. This Development Agreement constitutes the entire agreement between the Parties hereto as to the subject matter contained herein and supersedes any and all prior understandings, if any. There are no other oral or written promises, conditions, representations, understandings, or terms of any kind as conditions or inducements to the execution

DRAFT

hereof, and none have been relied upon by either party. Any subsequent conditions, representations, warranties, or agreements shall not be valid and binding upon the Parties unless they are in writing signed by the Parties and executed in the same manner as this Development Agreement.

11. **Parties Drafted Equally**. The City and Landowner agree that each party played an equal and a reciprocal part in drafting this Development Agreement. Therefore, no provision of this Development Agreement shall be construed by a Court or judicial authority against any party hereto because such party is deemed to have drafted or structured such provisions.

12. **Notices**. All notices, demands, requests for approvals or other communications given by either party to another shall be in writing and shall be sent by registered or certified mail, postage prepaid, return receipt requested or by a recognized national overnight courier service, or by hand delivery to the office of each party indicated below and address as follows:

To Landowner:
AMRES Investments, LLC
121 Alhambra Plaza,
Suite 1600
Coral Gables, Florida
Attn: _____

With a copy to:
Grimes Galvano, PL
1023 Manatee Avenue West
Bradenton, FL 34205
Attn: Bill Galvano, Esq.

To City:
City of Bradenton
101 Old Main Street West
Bradenton, Florida 34205
Attn: Mayor

With a Copy to:
Scott Rudacille, Esq.
Blalock Walters, P.A.
802 11th Street West
Bradenton, Florida 34205

13. **Survival of Warranties, Representations**. The warranties, representations, covenants and obligations of the Parties hereto shall be binding upon the Parties and their respective successors in interest.

14. **Effective Date**. This Development Agreement shall become effective upon the recording of a fully executed original of this Development Agreement in the Public Records of Manatee County, Florida, as provided in Section 9 hereof;

15. **Termination**. This Development Agreement shall remain in effect for the duration of the Project, unless terminated by written agreement of the Parties, or their successors in interest.

16. **Force Majeure**. No party shall be liable for any failure to perform, or delay in the performance of, any obligation under this Agreement if such failure is caused directly by hurricane, tornado, fire, earthquake, civil commotion or failure or disruption of utility services, epidemic, or other like cause beyond the reasonable control of the party obligated to perform. The foregoing shall not relieve the Developer of its obligations to carry out the provisions of the emergency plans and protocols described in Exhibits "C" and "D".

IN WITNESS WHEREFORE, the Parties hereto have executed this Development Agreement the day and year first above written.

"CITY"

CITY OF BRADENTON, a Florida Municipal subdivision of the State of Florida

ATTEST:

By: _____
Name: Gene Brown
Title: Mayor

_____
City Clerk

"LANDOWNER"

Signed, sealed and delivered in the presence of:

AMRES INVESTMENTS, LLC, a Florida limited liability company

By: _____
Name:
Title:

_____
Name: _____

_____
Name: _____

STATE OF FLORIDA
COUNTY OF _____

The foregoing instrument was acknowledged before me by means of ☐ physical presence or ☐ online notarization, this ____ day of _____, 2026 by _____ as _____ of AMRES INVESTMENTS, LLC, a Florida limited liability company, on behalf of the company. He/she is ☐ personally known to me or has ☐ produced _____ as identification.

_____

DRAFT

Signature of Notary Public

(Notary Seal)

_____

Print Name of Notary Public

I am a Notary Public of the State of _____,
and my commission expires on _____

DRAFT

LIST OF EXHIBITS

EXHIBIT "A"

Legal Description

EXHIBIT "B"

Conceptual Site Plan

EXHIBIT "C"

Hurricane Mitigation Plan

DRAFT

DESCRIPTION PER ORB 2310, PAGE 6264

PARCEL 1:

LOTS 1 THROUGH 17. PROSPECT ADDITION. ACCORDING TO THE MAP OR PLAT THEREOF RECORDED IN PLAT BOOK 5. PAGE 19, OF THE PUBLIC RECORDS OF MANATEE COUNTY, FLORIDA. LESS THE PORTIONS THEREOF CONVEYED TO THE STATE OF FLORIDA AS DESCRIBED IN DEED BOOK 382. PAGE 63 AND IN OFFICIAL RECORD BOOK 737, PAGE 796, PUBLIC RECORDS OF MANATEE COUNTY, FLORIDA.

AND

BEGIN AT THE SW CORNER OF MANATEE AND PROSPECT AVENUE (NOW MANATEE AVENUE AND 15TH STREET) IN THE CITY OF BRADENTON, FLORIDA, RUNNING THENCE SOUTH ALONG THE WEST SIDE OF PROSPECT AVENUE (15TH STREET) 127 2/3 FEET FOR A POINT OF BEGINNING; THENCE SOUTH ALONG THE WEST SIDE OF SAID PROSPECT AVENUE (15TH STREET) 65 FEET; THENCE WEST PARALLEL WITH MANATEE AVENUE TO WARES CREEK; THENCE NORTH ALONG WARES CREEK TO A POINT DUE WEST THE POINT OF BEGINNING; THENCE EAST TO THE POINT OF BEGINNING. LYING AND BEING IN THE SW 1/4 OF THE SW 1/4 OF SECTION 26, TOWNSHIP 34 SOUTH, RANGE 17 EAST.

AND

BEGINNING AT A POINT ON THE WEST SIDE OF PROSPECT AVENUE (15TH STREET WEST) IN THE CITY OF BRADENTON, FLORIDA, 264 FEET SOUTH FROM THE SOUTHWEST CORNER OF PROSPECT AVENUE AND MANATEE AVENUE. THE SAME BEING THE NORTHEAST CORNER OF LOT OWNED BY MRS. SARAH O. WEBBER; THENCE RUN NORTH ALONG THE WEST SIDE OF PROSPECT AVENUE (15TH STREET), THE DISTANCE OF 71 AND 1/3 FEET; THENCE WEST ON A LINE PARALLEL WITH THE CENTER LINE OF MANATEE AVENUE TO THE BANK OF WARE'S CREEK; THENCE SOUTH ALONG THE MARGIN OF SAID CREEK TO THE NORTHWEST CORNER OF MRS. SARAH O. WEBBER'S LOT; THENCE EAST TO POINT OF BEGINNING. IN THE SW 1/4 OF THE SW 1/4 OF SECTION 26, TOWNSHIP 34 SOUTH, RANGE 17 EAST.

AND

BLOCK "A' OF BALLARD'S ADDITION, AS PER PLAT THEREOF RECORDED IN PLAT BOOK 1. PAGES 73 AND 103, OF THE PUBLIC RECORDS OF MANATEE COUNTY, FLORIDA.

PARCEL 2:

BEGIN AT THE SE CORNER OF BLOCK OF BALLARD'S ADDITION, AS PER PLAT THEREOF RECORDED IN PLAT BOOK 1, PAGE 103 OF THE PUBLIC RECORDS OF MANATEE COUNTY, FLORIDA; THENCE DUE WEST ALONG SOUTH BOUNDARY OF SAID BLOCK "A", A DISTANCE OF 349.35 FEET FOR A POINT OF BEGINNING; THENCE NORTH 100 FEET TO THE NORTH LINE OF SAID BLOCK "A"; THENCE WEST TO THE PRESENT SEAWALL; THENCE SOUTHERLY ALONG SAID SEAWALL TO A POINT THAT INTERSECTS WITH THE SOUTH BOUNDARY LINE OF SAID BLOCK "A" EXTENDED WEST; THENCE EAST APPROXIMATELY 150 FEET TO POINT OF BEGINNING; TOGETHER WITH ALL RIPARIAN RIGHTS THEREUNTO BELONGING.

THE WEST 1/2 OF THE FOLLOWING DESCRIBED LAND, TO WIT:

BEGIN AT THE SE CORNER OF BLOCK “A” OF BALLARD’S ADDITION, AS PER PLAT THEREOF RECORDED IN PLAT BOOK 1, PAGE 103 OF THE PUBLIC RECORDS OF MANATEE COUNTY, FLORIDA; THENCE WEST ALONG SOUTH BOUNDARY OF SAID BLOCK "A", 255 FEET FOR POINT OF BEGINNING; THENCE NORTH 100 FEET TO NORTH LINE OF SAID BLOCK "A”; THENCE WEST 94.35 FEET; THENCE SOUTH 100 FEET; THENCE EAST 94.35 FEET TO THE POINT OF BEGINNING.

ALL OF WHICH BEING MORE PARTICULARLY DESCRIBED AS FOLLOWS :

BEGINNING AT THE SOUTHEAST CORNER OF BLOCK “A" AS SHOWN AND DESIGNATED ON A PLAT ENTITLED "BALLARD'S ADDITION" RECORDED AMONG THE PUBLIC RECORDS OF MANATEE COUNTY, FLORIDA IN PLAT BOOK 1, PAGE 103; THENCE ALONG THE SOUTH BOUNDARY OF SAID BLOCK "A", N 88°33'22" W, A DISTANCE OF 500.73 FEET TO THE MEAN HIGH WATER LINE OF WARE’S CREEK; SAID MEAN HIGH WATER LINE LYING ON THE FACE OF AN EXISTING SEAWALL: THENCE ALONG THE FACE OF THE SEAWALL AND MEAN HIGH WATER LINE. THE FOLLOWING FIFTEEN COURSES AND DISTANCES:

1.	N 12°39’31" E	6.76'	9.	N 09°11’57" E	43.76’
2.	N 12°46'37" E	17.11’	10.	N 09°29’30" E	17.87’
3.	N 15°10’26" E	27.26'	11.	N 09°21’12" E	9.20’
4.	N 13°20’37" E	16.92'	12.	N 05°12’39" E	38.95’
5.	N 13°07’25" E	14.16'	13.	N 03°38’41" E	10.26’
6.	N 12°59’36" E	30.96’	14.	N 03°24’49" E	36.01’
7.	N 13°04’44" E	32.90’	15.	N 02°32’28" E	11.30'
8.	N 13°00’53" E	24.46'			

THENCE N 00°03’17" W, A DISTANCE OF 13.09 FEET TO A POINT ON THE SOUTHERLY RIGHT-OF-WAY LINE OF STATE ROAD 64 (MANATEE AVENUE): THENCE ALONG SAID RIGHT-OF-WAY LINE. S88’39'29’ E. A DISTANCE OF 393.65 FEET TO A POINT OF CURVATURE OF A CURVE CONCAVE SOUTHWESTERLY HAVING A RADIUS OF 55.00 FEET; THENCE SOUTHEASTERLY ALONG THE ARC OF SAID CURVE THROUGH A CENTRAL ANGLE OF 80°07’56". A DISTANCE OF 76.92 FEET TO A POINT OF NON-TANGENCY; SAID POINT LYING ON THE WESTERLY RIGHT-OF-WAY LINE OF 15TH STREET WEST; THENCE ALONG SAID RIGHT-OF-WAY LINE. S 00°42’58" W. A DISTANCE OF 301.74 FEET TO THE POINT OF BEGINNING. CONTAINING AN AREA OF 3.70 ACRES MORE OR LESS.

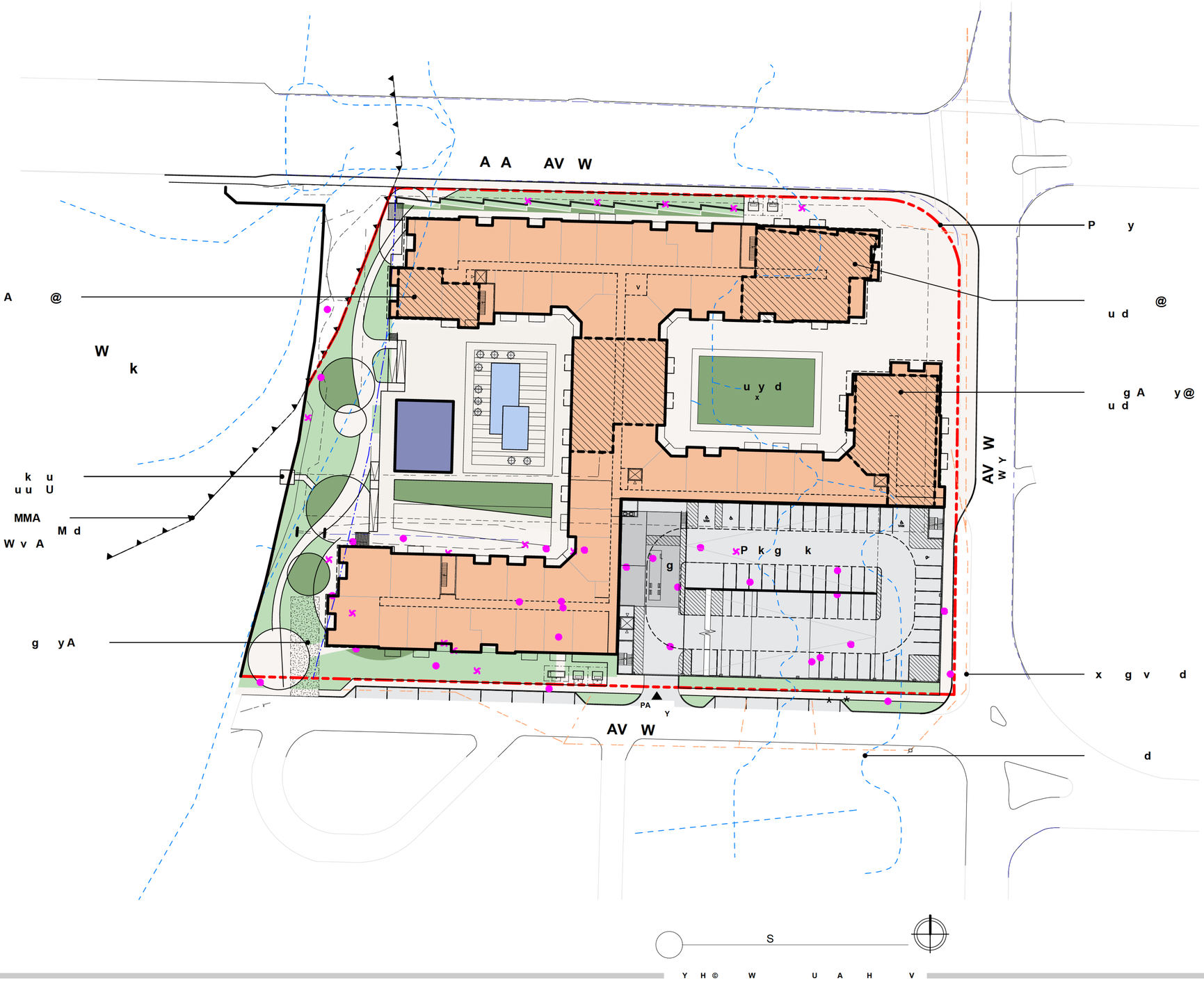

U H U

B	MU				
B	M U				
B	MU				
B	M U				
B	MU				
A				%	9

		A	A A
	8	2	2
2	2	0	2
3	2	0	2
	2	0	2
	2	0	2
	2	0	2
A			=

2 = 2
0 0 3

dwell design studio

U A

V P

ALLEN MORRIS COMPANY

P

MANATEE A E

B

U M

A

H M

S

H U B

Ac00 11

296

ZNS|ENGINEERING
Land Planning Engineering Surveying Landscape Architecture

OLD CITY HALL
PID # 3354500109

Hurricane Mitigation Plan

TABLE OF CONTENTS

I. INTRODUCTION 3

II. SEVERE WEATHER PREPAREDNESS AND SHELTER INFORMATION 4

III. HAZARD ANALYSIS 7

IV. CONCEPT OF OPERATIONS 9

V. INFORMATION, TRAINING AND EXERCISE 9

VI. APPENDICES 10

EXHIBIT A: EVACUATION ZONES MAP
EXHIBIT B: FLOOD ZONES MAP
EXHIBIT C: EVACUATION ROUTES AND SHELTERS

I. INTRODUCTION

The Old City Hall site is a proposed mixed-use multi-family residential development of 345 dwelling units with additional proposed small-scale commercial uses. Residential units will consist of 1br, 2br and 3br multi-family dwelling units.

II. SEVERE WEATHER PREPAREDNESS AND SHELTER INFORMATION

Hurricane Season Resident To-Do List:

- Check your disaster supplies kit and obtain items needed.
- To be prepared in the event of a tornado, discuss a safe place for your family to take refuge, such as a laundry room, pantry, bathroom, etc.
- Purchase a battery powered weather alert radio.
- Check with your insurance agent regarding your coverage.

As the Hurricane approaches:

- Be aware that hurricanes also produce tornadoes, which add to the hurricane's destructive power. Find shelter in a small interior room on the lowest floor, staying away from windows, doors, and electrical equipment. Avoid rooms near tall structures like trees or power lines. Taking refuge in such spaces provides protection from flying debris
- Listen for weather updates on local station and on NOAA weather radio. Do not trust rumors and stay tuned to the latest information.
- Refill prescriptions. Maintain at least a two-week supply during hurricane season.
- Clear your patio or balcony of lawn furniture, potted plants, bicycles, trashcans, etc.
- Protect your windows and glass doors. Brace double entry and garage doors at the top and bottom.
- Fill your car's tank and check the oil, water and tires. Gas pumps do not operate without electricity.
- Get cash. Banks and ATMs will not be in operation without electricity and few stores will be able to accept credit cards or personal checks.

1. Emergency Public Shelter Locations.

   For details of shelter locations in the area, please see the Shelters Map (Exhibit C). Nearby shelters for 2025 include: First Baptist Church Bradenton, located approximately 400 feet away, Rogers Garden Elementary School, located approximately 1.1 miles away, and Manatee High School, which is approximately 1.6 miles away from the subject site. The nearest pet-friendly shelter is Miller Elementary School located approximately 1.8 miles away.

   Please note the following:

   - Shelter openings may vary with each emergency. Stay tuned to local media for a listing of which shelters will be opened for an event.
   - Do not go to the shelter until local officials announce through the media that the shelter is open.
   - Shelter openings will differ by size and intensity of a disaster.
   - For additional information, refer to the Hurricane Guide attached to this booklet.

2. Evacuation Routes.

   For details on Evacuation Routes, please see the Evacuation Routes and Shelters Map (Exhibit C).

3. Residential Re-Entry Procedures, if applicable.

Re-Entry Information:

1. Be patient. Access to affected areas will be controlled. You will not be able to return to your home until search and rescue operations are completed, and safety hazards such as downed trees and power lines are cleared. It may take up to three days for emergency crews to reach your neighborhood. It may take two to four weeks before utilities are restored.
2. Have a valid ID. Security operation may include checkpoints. Valid identification with your current local address will be required.
3. Avoid driving. Roads will have debris, which can puncture your tires. Do not add to the congestion of relief workers, supply trucks, law enforcement, etc.
4. Do not sightsee, especially at night.

Safety Tips:

1. Avoid downed or dangling utility wires. Metal fences may have been energized by fallen wires. Be especially careful when cutting or clearing fallen trees. They may have power lines tangled in them.
2. Beware of snakes, insects and animals driven to higher ground by floods.
3. Enter your home with caution. Open windows and doors to ventilate and dry your home.
4. If there has been flooding, have an electrician inspect your home or office before turning on the breaker.
5. Be careful with fire. Do not strike a match until you are sure there are no broken gas lines. Avoid candles. Use battery operated flashlights and lanterns instead.
6. Keep grills outdoors in a well-ventilated area.
7. Use your telephone only in emergencies to keep lines open for emergency communications.

After a disaster, you may be without power, water, food or any of the services or businesses we rely on. An immediate response may not be possible, so residents must be prepared to be self-reliant for several weeks.

Water Precautions:

Whenever widespread flooding occurs, there is a potential for bacterial contamination. Bacteria can lead to life-threatening dehydration for people and their pets, if untreated.

Disinfect any tap water you drink or use for cooking or cleaning. You must purify the tap water until officials notify you of its safety. Bring water to a rolling boil for a full 10 minutes. Let the water sit at least 10 minutes before using.

The Leasing and Management Company will be responsible for providing emergency information to residents in the form of brochures and City of Bradenton Electronic emergency media available in the leasing office.

III. HAZARD ANALYSIS

This development has the potential for flooding due to hurricanes. The site is located in the Zone A Evacuation Area. An Evacuation Level Map has also been included as Exhibit A. The Old City Hall proposed development will have 345 multi-family units, with a total estimated population of 419, including an estimated 300 full-time residents and an additional estimated seasonal population of 119.

The proposed finished flood elevation of the first floor is estimated at 12.5 feet. The site is located in Flood Zones AE and X. A Flood Zone map has been included as Exhibit B.

IV. CONCEPT OF OPERATIONS

The Owner/Management will be responsible for implementing the Mitigation Evacuation Plan, and the Mitigation Evacuation Plan will go into effect once a hurricane watch is posted or there is an emergency situation that will possibly affect this development.

Once a hurricane watch is posted, property management employees will be notified to secure community property such as patio furniture, pool equipment; sales center, i.e., computer files, important documents, etc.

V. INFORMATION, TRAINING AND EXERCISE FOR RESIDENTS

Emergency information such as hurricane evacuation, tornado preparedness, and shelter information, along with this Mitigation Evacuation Plan will be provided with to each resident at the time of the initial lease. Updates will provided periodically to residents through resident meetings and electronic media.

An up to date list of names, addresses, telephone numbers, including seasonal contact numbers, if applicable, of all residents will be maintained in the leasing office. A roster of Community Employees and Companies with emergency preparedness related activities will be posted in the Leasing Office.

The utility providers for this development are:

City of Bradenton
101 Old Main Street
Bradenton, FL 34205
(941) 932-9434

Frontier
6102 14th Street West
Bradenton, FL 34207
(941) 727-4348

Florida Power & Light
P. O. Box 025576
Miami, FL 33102
(941) 917-0708

Spectrum (cable)
5413 East State Road 64
Bradenton, FL 34208
(866) 874-2389

1. List the names and telephones numbers of other important telephone numbers (e.g., the sheriff, fire district, emergency management, health department, Red Cross, etc.), as applicable.

Other important numbers include:

Bradenton Police Department	**(941) 932-9300**
Bradenton Fire Department	**(941) 932-9600**
Health Department	**(941) 748-0747**
Red Cross	**(941) 792-8686**
Emergency Management	**(941) 749-3500**
Emergency	**911**

EXHIBIT A : EVACUATION ZONES MAP

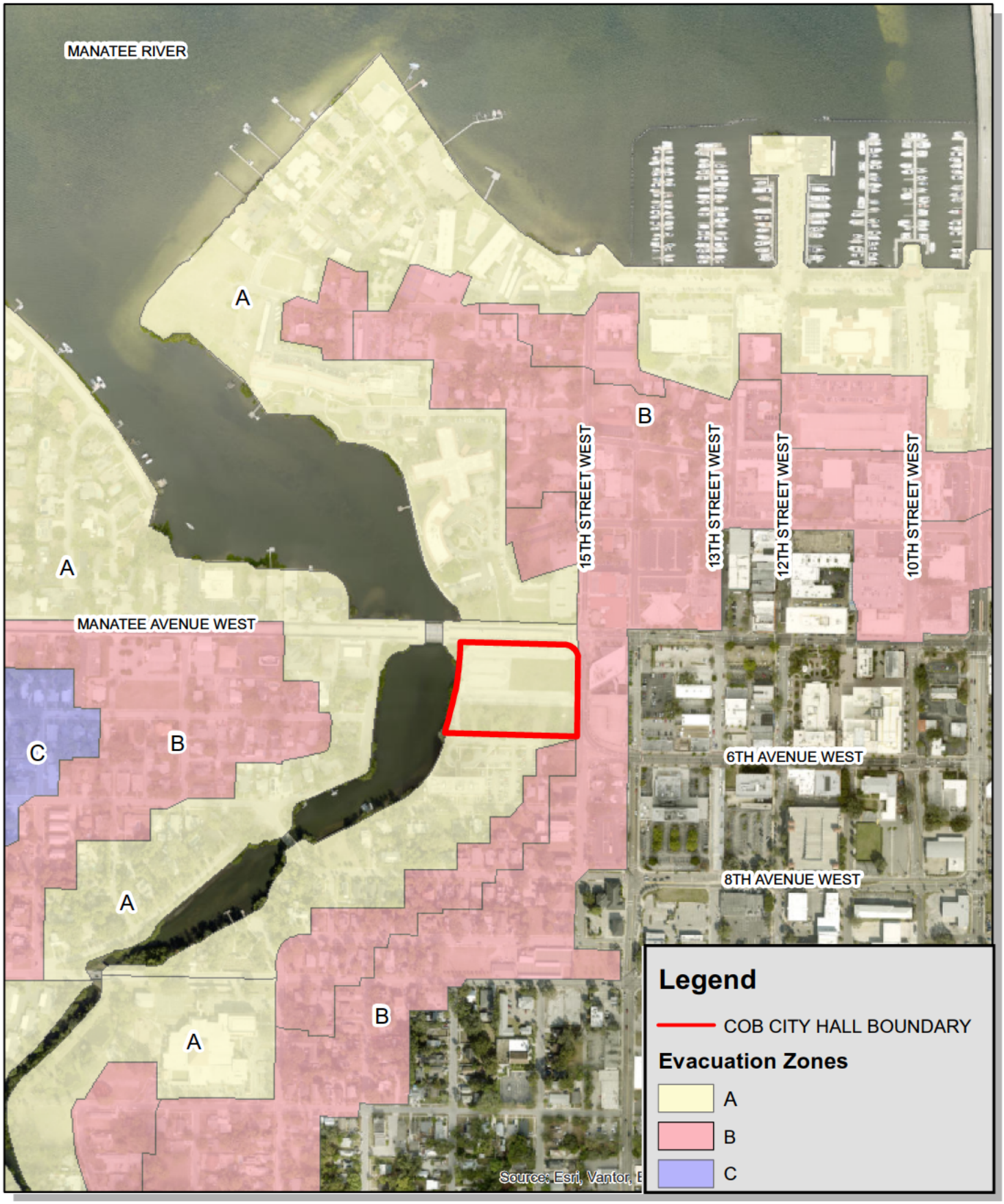

ZNS ENGINEERING
Land Planning Engineering Surveying Landscape Architecture
1023 MANATEE AVE WEST, 7TH FLOOR
BRADENTON, FL 34205
TELEPHONE 941 748 8080 FAX 941 748 3316

OLD CITY HALL SITE

SECTION 26, TOWNSHIP 34 SOUTH, RANGE 17 EAST
SCALE: 1" = 500'
SOURCE: MANATEE COUNTY

N

THIS MAP IS PROVIDED FOR GRAPHICAL REPRESENTATI
AND GENERAL REFERENCE ONLY. THE DATA CONTAIN
HEREIN IS SUBJECT TO CHANGE AND IS NOT WARRANT

EXHIBIT B : FLOOD ZONES MAP

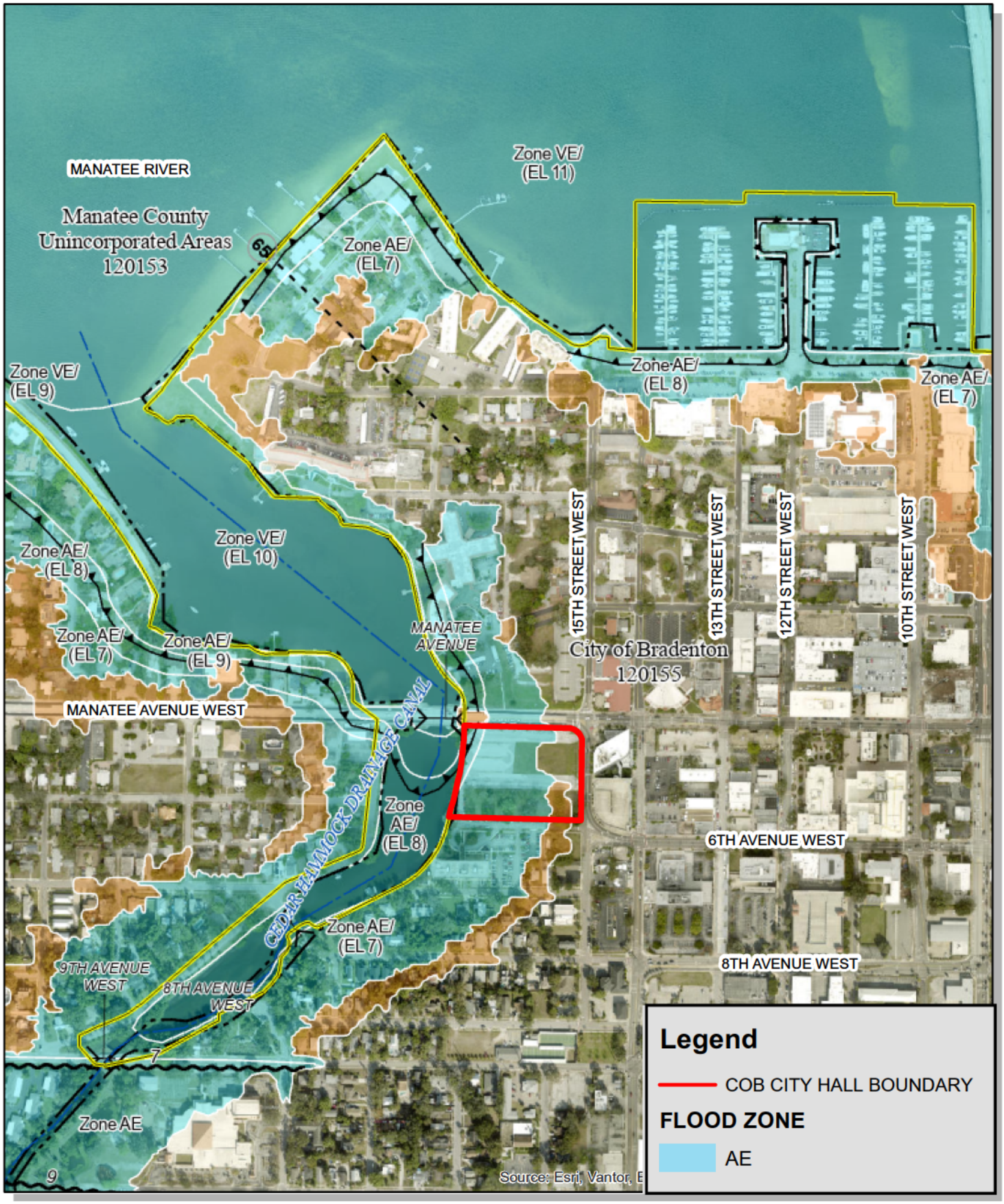

ZNS ENGINEERING
Land Planning Engineering Surveying Landscape Architecture
1023 MANATEE AVE WEST, 7TH FLOOR
BRADENTON, FL 34205
TELEPHONE 941 748 8080 FAX 941 748 3316

OLD CITY HALL SITE

SECTION 26, TOWNSHIP 34 SOUTH, RANGE 17 EAST
SCALE: 1" = 500'
SOURCE: MANATEE COUNTY

N

THIS MAP IS PROVIDED FOR GRAPHICAL REPRESENTATI
AND GENERAL REFERENCE ONLY. THE DATA CONTAIN
HEREIN IS SUBJECT TO CHANGE AND IS NOT WARRANT

EXHIBIT C : EVACUATION ROUTE & SHELTER MAP

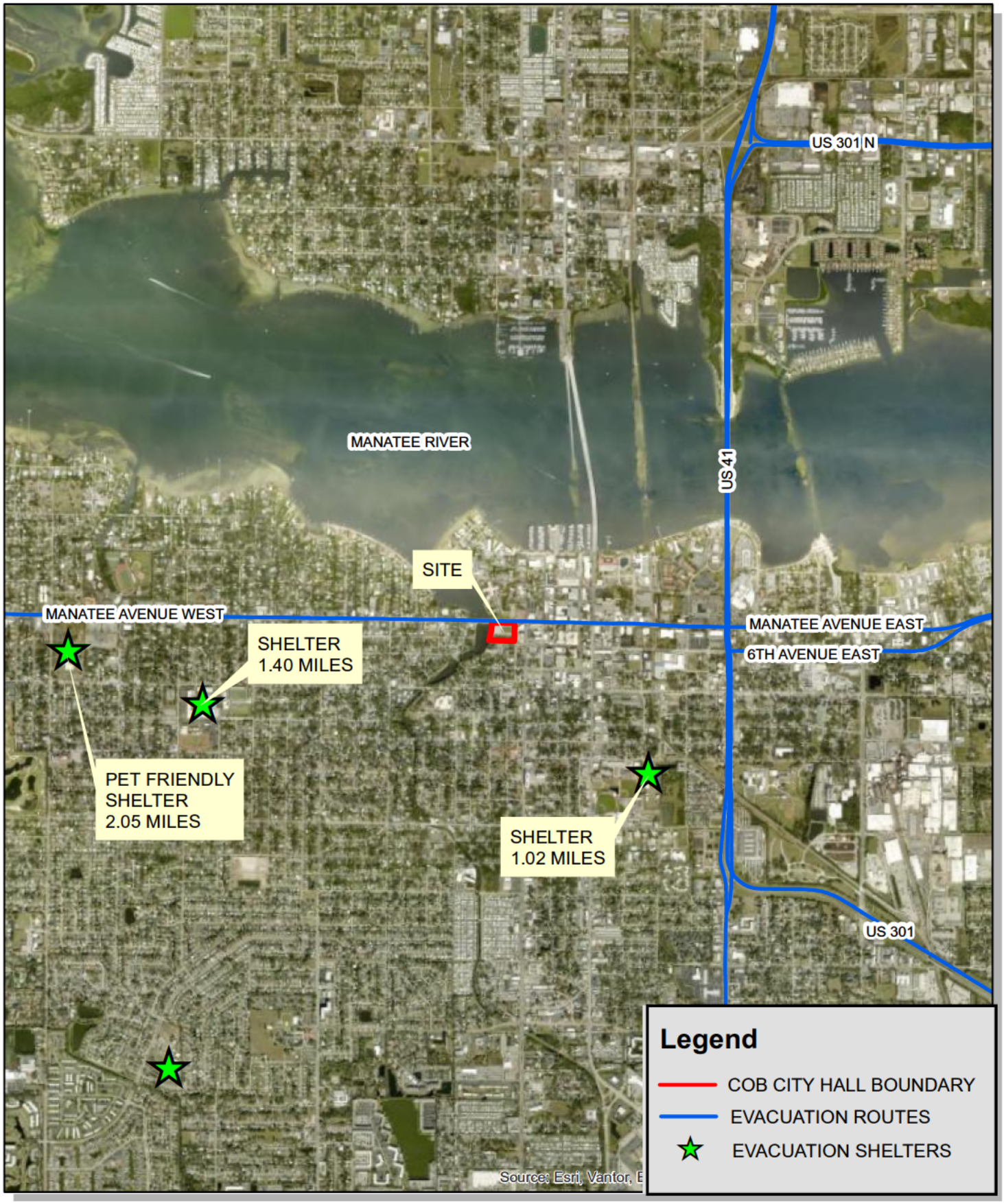

ZNS ENGINEERING
Land Planning Engineering Surveying Landscape Architecture
1023 MANATEE AVE WEST, 7TH FLOOR
BRADENTON, FL 34205
TELEPHONE 941 748 8080 FAX 941 748 3316

OLD CITY HALL SITE

SECTION 26, TOWNSHIP 34 SOUTH, RANGE 17 EAST
SCALE: 1" = 1 MILE
SOURCE: MANATEE COUNTY

N

THIS MAP IS PROVIDED FOR GRAPHICAL REPRESENTATI
AND GENERAL REFERENCE ONLY THE DATA CONTAIN
HEREIN IS SUBJECT TO CHANGE AND IS NOT WARRANT

AGENDA ITEM NO. 7.d

Item Cover Page

CITY COUNCIL MEETING AGENDA ITEM REPORT

DATE: May 27, 2026

SUBMITTED BY: Jamie Schindewolf, Planning & Community Development

ITEM TYPE: Agreement

AGENDA SECTION: BUSINESS/ADVERTISING, PETITIONS, HEARINGS & COMMUNICATIONS

SUBJECT: PLN-DVA-26-0001 LOCAL DEVELOPMENT AGREEMENT (LDA) - SECOND PUBLIC HEARING
Approval of a Development Agreement between the City of Bradenton and Amres Investments, LLC pursuant to Section 163.3227, Florida Statutes and approval of a density increase in the Urban Core Future Land Use Category pursuant to Policy 1.2.1 of the Future Land Use Element of the City of Bradenton's Comprehensive Plan.

SUGGESTED ACTION: Approval of density bonus (QJ): Move to approve a density increase to 345 equivalent dwelling units in the Urban Core Land Use Category, finding the increase meets the criteria set forth in Policy 1.2.1 of the Future Land Use Element of the City of Bradenton's Comprehensive Plan, and conditioned on the approval of the Local Development Agreement between the City of Bradenton and Amres Investments, LLC.

LDA (Legislative): Move to approve the Local Development Agreement between the City of Bradenton and Amres Investments, LLC pursuant to Section 163.3227, Florida Statutes.

Is this item Quasi-Judicial?
No

Does this item require a public hearing?
Yes

EXPLANATION:

The applicants, Manatee County and AMRES Investments, LLC are proposing a mixed-use project to be located at 500 15th Street West, Bradenton, Florida 34205, east of Wares Creek, south of Manatee Avenue West, west of 15th Street West and north of 6th Avenue West. They are requesting approval of an amendment to the future land use designation of the property under Ordinance 4067 from Urban Central Business District to Urban Core. The property is within the Coastal High Hazard Area, the increase in allowable density resulting from the map amendment requires a land development agreement and mitigation plan.

The Urban Core future land use designation also provides for an increase in density of up to 200 dwelling units per acre if approved by City Council subject to the criteria in Policy 1.2.1 of the Future Land Use Element of the Comprehensive Plan. The staff report for Ordinance 4067 provides an analysis of this request. Approval of this agreement will allow 345 residential development units together with 13,117 square feet of office / amenity space and 7,008 square feet commercial retail.

FINANCIAL IMPACT:
N/A

ATTORNEY REVIEW/RECOMMENDATION:
Reviewed by Conflict Counsel Erica Augello.

SUGGESTED MOTION:
Move to approve a density increase to 345 equivalent dwelling units in the Urban Core Land Use Category, finding the increase meets the criteria set forth in Policy 1.2.1 of the Future Land Use Element of the City of Bradenton's Comprehensive Plan, and conditioned on the approval of the Local Development Agreement between the City of Bradenton and Amres Investments, LLC.

Move to approve the Local Development Agreement between the City of Bradenton and Amres Investments, LLC pursuant to Section 163.3227, Florida Statutes.

ATTACHMENTS:
Development Agreement

LOCAL DEVELOPMENT AGREEMENT

THIS LOCAL DEVELOPMENT AGREEMENT (the "**Development Agreement**") is made and entered as of this __ day of _____, 2026, by and between **CITY OF BRADENTON**, a Florida municipality, whose address is 101 Old Main Street West, Bradenton, Florida 34205, (the "**CITY**") and **AMRES INVESTMENTS, LLC,** a Florida limited liability company, whose mailing address is 121 Alhambra Plaza, Suite 1600, Coral Gables, Florida 33134 (the "**LANDOWNER**"). The City and the Landowner are sometimes referred to herein individually as a "**Party**" and collectively as the "**Parties**."

WITNESSETH:

WHEREAS, Landowner intends to redevelop vacant property located adjacent to Ware's Creek at 500 15th Street West, Bradenton, Florida 34205; and

WHEREAS, Landowner will hold legal and equitable title to 3.70 acres (the "Property") which Property is more particularly described in Exhibit "A", which is attached and incorporated herein, and

WHEREAS, the Landowner requests an amendment to the Property's Future Land Use Classification, per the City's Comprehensive Plan ("Comprehensive Plan") from Urban Central Business District to Urban Core which allows a maximum density of up to 60 dwelling units per acre by right, up to 70 dwelling units per acre with income restrictions, and up to 200 equivalent dwelling units ("EDU") per acre with approval by City Council upon a determination that all criteria provided in the Comprehensive Plan are met; and

WHEREAS, on March 6, 2026, the Landowner submitted an application for a Comprehensive Plan Amendment to change the Future Land Use Map classification to Urban Core, and

WHEREAS, the Landowner seeks approval for a mixed-use development including a density increase to 345 EDUs, based on approximately 94 dwelling units per acre, together with office and retail pursuant to Policy 1.2.1 of the Comprehensive Plan; and

WHEREAS, the Landowner provided an analysis of the project demonstrating that the criteria for the additional density has been met pursuant to Policy 1.2.1, Urban Core, of the Comprehensive Plan; and

WHEREAS, since a portion of the Property is located within the Coastal High Hazard Area, the Landowner is required to address hurricane evacuation criteria for the adopted level of service as measured on the Saffir-Simpson Scale for a Category 5 storm as set forth in §163.3178(8)(a), Florida Statutes; and

WHEREAS, Section 163.3178(8)(a)(3), Florida Statutes, requires that a local government and developer enter into a binding agreement to memorialize the mitigation plan for any increase of density in the Coastal High Hazard Area; and

WHEREAS, Policy 5.3.1.2 of the City's Comprehensive Plan, as adopted by Ordinance 4035, requires that the Development Agreement include a binding conceptual site plan (the "Conceptual Site Plan") and any required mitigation plan for hurricane evacuation, consistent with Section 163.3178(8)(a), Florida Statutes; and

WHEREAS, it is the intent of Landowner, in good faith, to enter into this binding development agreement whereby Landowner shall commit to appropriate hurricane mitigation in the event of a category 5 storm event as measured on the Saffir-Simpson Scale as set forth in Section 163.3178(8)(a), Florida Statutes; and

WHEREAS, the Landowner has committed that all new buildings constructed on the Property will meet federal, state, and local construction standards which will mitigate impacts of these facilities due to a storm event; and

WHEREAS, pursuant to Section 163.3220, Florida Statutes, et seq. (the "Act"), the City is authorized to enter into a development agreement; and

WHEREAS, the Parties determined that it would be mutually beneficial to enter into a development agreement governing the matters set forth herein and have negotiated this Agreement in accordance with the City's Comprehensive Plan, the City's Code, and the Act; and

WHEREAS, the first and second required public hearings on this Development Agreement were held by the City Council on May 13, 2026, and May 27, 2026, at which time the City Council received the recommendation of the Planning staff, and found this Development Agreement to be consistent with the Comprehensive Plan, and approved this Development Agreement and authorized the Mayor to execute this Development Agreement on behalf of the City.

NOW, THEREFORE, in consideration of the mutual promises and covenants contained herein, the parties hereby agree as follows:

1. **Recitals True and Correct.** The Recitals set forth above are true and correct and are incorporated by reference as if fully set forth herein.

2. **Incorporation of the Act**. This Development Agreement is entered into in compliance with and under the authority of the Act, the terms of which as of the date of this Development Agreement are incorporated herein by this reference and made a part herein. Words used in this Development Agreement without definition that are defined in the Act shall have the same meaning in this Agreement as in the Act.

3. **Description of the Development**. The Property shall be developed in substantial compliance with, and using the development uses and densities (and in the case of commercial uses, square footage) set forth in the Conceptual Site Plan, attached hereto and incorporated herein as Exhibit "B" (the "Project"). The Conceptual Site Plan is subject to the following:

(a) Pursuant to Policy 1.2.1 of the Comprehensive Plan, the Landowner has submitted an application for a Future Land Use Map amendment which will result in increased

density, as well as an application for a density bonus. The approval of this Development Agreement is conditioned on the approval by the City Council of such density increases, where the City Council finds the following criteria have all been met:

- Provides for multi-use solutions for transportation with an emphasis on alternate transit modes and pedestrian access and walkability;
- Development that is arranged in block dimensions that maintain a pedestrian scale;
- Includes a public park, plaza, courtyards and/or public art; and
- Architecture that recognizes the existing context of the area and provides for massing, height, building composition, proportion and materials, a rendering which is attached and incorporated herein as Exhibit "C".

If such approval is received, based upon the existing acreage (3.7 acres), 345 EDUs may be constructed on the Property together with office and retail. The units may be located within the CHHA portions of the Property as provided in the Conceptual Site Plan.

(b) The Project will include infrastructure repair and redevelopment including, without limitation, the seawalls along Wares Creek (subject to a mutually acceptable funding agreement with the City and/or CRA). These repairs are to be completed pursuant to the approval of construction plans for such repairs by the City. The City acknowledges and agrees to these repairs and their impacts. The Project will include the Hurricane Mitigation Plan substantially as described in Exhibit "D", which is attached hereto and incorporated herein.

(c) The Project will include development of a linear park on the western portion of the Property fronting Wares Creek (the "Park"), including public access to the park from the nearest right-of-way at the north and south ends. Upon completion of the development of the Park, ownership of the Park will be transferred to the City for public use. The City agrees and acknowledges that it will accept conveyance of the Park and at said conveyance, the City agrees to assume all liability for the Park. Landowner agrees to continue to maintain the Park after the conveyance.

(d) Notwithstanding the foregoing, the Landowner acknowledges and agrees that the development of the Project as described herein shall require additional development approvals, including without limitation, site improvement permit(s) and building permits, and nothing contained in this Development Agreement shall be deemed an authorization of any future required approvals. The Project shall be subject to all applicable development standards.

4. **Description of Public Facilities.** The following public facilities and services will serve the Project:

(a) Potable Water: The City will provide potable water to the Project in sufficient quantity to serve the Project, as and when actually constructed, via transmission lines and related facilities which are already in place.

(b) Sanitary Sewer: The City will provide sanitary sewer service to the Project in sufficient quantity to serve the Project, as and when actually constructed, via transmission lines and related facilities which are already in place.

(c) Solid Waste: The City will provide Solid Waste Management Services to the Project to serve the Project, as and when actually constructed, via facilities which are already in place.

(d) Recreation/Open Space: Although additional open space and recreational facilities may be provided with the Project, the Project will meet concurrency requirements for recreation/open space and will not result in degradation of the adopted level of service due to facilities currently in place.

(e) Storm Water Management: With the design and construction of the proposed storm water management facilities in the Project in compliance with the City's development standards and SWFWMD regulations, the Project will meet concurrency requirements for storm water and will not result in degradation of the adopted level of service.

(f) Transportation: The City will provide Transportation Services to the Project to serve the Project, as and when actually constructed, via facilities which are already in place.

5. **Monitoring.** During the term of this Development Agreement the Landowner shall file an annual monitoring report relating to the Property and the Project with the City's Planning Director consistent with the requirements of the Act. If requested, the first such report shall be filed one year from the effective day of this Development Agreement as defined herein.

6. **Concurrency Findings.** The Concurrency Requirements of the City's Comprehensive Plan and Land Use and Development Regulations will be met for the Project regarding the public facilities and services described in Section 4 above.

7. **Permits Required.** The following is a description of all local development permits approved or needed to be approved for the Project:

- Form Based Code Approval and/or Adjustment;
- Site Improvement Plan;
- One or more Construction Plan approvals;
- One or more Building Permits; and
- One or more Certificates of Occupancy or of Completion.

7. **Omission from Development Agreement.** The failure of this Development Agreement to address a particular permit, condition, term, or restriction shall not relieve the Landowner of the necessity of complying with the law, including without implied limitation the applicable provisions of the City's Comprehensive Plan and Land Use and Development Regulations, governing said permitting requirements, conditions, terms, or restrictions.

8. **Ownership of Land Subject to Development Agreement**. A legal description of the land subject to this Development Agreement (i.e., the Property) is attached hereto as Exhibit "A". The current legal and equitable owner and developer of the Property is Manatee County.

9. **Disclaimer of Joint Venture**. Landowner and City represent that by the execution of this Development Agreement, it is not the intent of the Parties that this Development Agreement be construed or deemed to represent a joint venture, undertaking between City or Landowner, or either with any third party. While engaged in carrying out and complying with the terms of this Development Agreement, Landowner is an independent principal and not a contractor or an officer or employee of the City, and Landowner shall not at any time or in any manner represent that it or any of its agents or employees are employees of the City.

10. **Successors in Interest**. Pursuant to Section 163.3239, Florida Statutes, the burdens of this Development Agreement shall be binding upon, and the benefits shall inure to, all successors in interest to the Parties to the Development Agreement including all mortgagees for the Property. Accordingly, the obligations of the Landowner set forth in this Development Agreement shall run with the land and shall be binding upon Landowner's successors in interest in the Property. Notwithstanding anything in this Development Agreement to the contrary, the City shall have no responsibility or liability for any obligations of Landowner under this Development Agreement other than as set out in Section 2(d) of this Development Agreement.

11. **Amendments**. All amendments to this Development Agreement, including any such amendments extending the term of the Development Agreement, shall be ineffective unless reduced to writing, approved by the City Council, and executed by the City and Landowner.

12. **Recording of this Agreement**. The Landowner shall record this Development Agreement in the Public Records of Manatee County and provide the original recorded Development Agreement to the City no later than fourteen (14) days after the execution of this Development Agreement by all Parties. Landowner shall bear the expense of recording this Development Agreement.

13. **Applicable Law and Venue**. This Development Agreement shall be construed, and the rights and obligations of the Parties hereunder shall be determined, in accordance with the laws of the State of Florida. Venue for any litigation pertaining to the subject matter hereof shall be exclusive in Manatee County, Florida, unless prohibited by law.

14. **Severability**. In the event any term or provision of this Development Agreement shall be held invalid by a court of competent jurisdiction, such invalid term or provision will not affect the validity of any other term or provision hereof; and all such terms and provisions hereof shall be enforceable to the fullest extent permitted by law as if such invalid term or provision had never been part of this Development Agreement; provided, however, if any term or provision of this Development Agreement is held to be invalid due to the scope or extent thereof, then, to the extent permitted by law, such term or provision shall be automatically deemed modified in order that it may be enforced to the maximum scope and extent permitted by law.

15. **Entire Agreement**. This Development Agreement constitutes the entire agreement between the Parties hereto as to the subject matter contained herein and supersedes any and all prior understandings, if any. There are no other oral or written promises, conditions, representations, understandings, or terms of any kind as conditions or inducements to the execution hereof, and none have been relied upon by either Party. Any subsequent conditions, representations, warranties, or agreements shall not be valid and binding upon the Parties unless they are in writing signed by the Parties and executed in the same manner as this Development Agreement.

16. **Parties Drafted Equally**. The City and Landowner agree that each Party played an equal and a reciprocal part in drafting this Development Agreement. Therefore, no provision of this Development Agreement shall be construed by a Court or judicial authority against any Party hereto because such Party is deemed to have drafted or structured such provisions.

17. **Notices**. All notices, demands, requests for approvals or other communications given by either Party to another shall be in writing and shall be sent by registered or certified mail, postage prepaid, return receipt requested or by a recognized national overnight courier service, or by hand delivery to the office of each Party indicated below and address as follows:

To Landowner:	AMRES Investments, LLC 121 Alhambra Plaza, Suite 1600 Coral Gables, Florida Attn: _____
With a copy to:	Grimes Galvano, PL 1023 Manatee Avenue West Bradenton, FL 34205 Attn: Bill Galvano, Esq.
To City:	City of Bradenton 101 Old Main Street West Bradenton, Florida 34205 Attn: Mayor
With a Copy to:	Erica F. Augello, Esq. Trask Daigneault, LLP 1001 S. Fort Harrison Ave., Ste. 201 Clearwater, FL 33756

18. **Survival of Warranties, Representations**. The warranties, representations, covenants and obligations of the Parties hereto shall be binding upon the Parties and their respective successors in interest.

19. **Effective Date**. This Development Agreement shall become effective upon the recording of a fully executed original of this Development Agreement in the Public Records of Manatee County, Florida, as provided in Section 12 hereof.

20. **Termination**. This Development Agreement shall automatically terminate and expire upon the occurrence of the first of the following:

(A) The full performance by all Parties hereto of each and every one of their respective obligations arising under the terms of this Development Agreement.

(B) The expiration of thirty (30) years from the effective date of this Agreement, as defined in Section 19 above.

(C) The revocation of this Development Agreement by the City Council in accordance with Section 163.3235, Florida Statutes.

(D) The execution of a written agreement by all Parties, or their successors in interest, providing for the cancellation and termination of this Development Agreement.

21. **Force Majeure**. No Party shall be liable for any failure to perform, or delay in the performance of, any obligation under this Agreement if such failure is caused directly by hurricane, tropical storm, tornado, fire, earthquake, civil commotion or failure or disruption of utility services, epidemic, or other like cause beyond the reasonable control of the Party obligated to perform.

[signature pages to follow]

IN WITNESS WHEREFORE, the Parties hereto have executed this Development Agreement the day and year first above written.

"CITY"

CITY OF BRADENTON, a Florida Municipal subdivision of the State of Florida

ATTEST:

_____
City Clerk

By: _____
Name: Gene Brown
Title: Mayor

"LANDOWNER"

Signed, sealed and delivered in the presence of:

AMRES INVESTMENTS, LLC, a Florida limited liability company

_____
Name: _____

By: _____
Name:
Title:

_____
Name: _____

STATE OF FLORIDA
COUNTY OF _____

The foregoing instrument was acknowledged before me by means of ☐ physical presence or ☐ online notarization, this ____ day of _____, 2026 by _____ as _____ of AMRES INVESTMENTS, LLC, a Florida limited liability company, on behalf of the company. He/she is ☐ personally known to me or has ☐ produced _____ as identification.

_____
Signature of Notary Public

(Notary Seal)

_____
Print Name of Notary Public

I am a Notary Public of the State of _____, and my commission expires on _____

LIST OF EXHIBITS

EXHIBIT "A"

Legal Description

EXHIBIT "B"

Conceptual Site Plan

EXHIBIT "C"

Renderings and building elevations demonstrating compliance with architectural criteria.

EXHIBIT "D"

Hurricane Mitigation Plan

EXHIBIT "A"

Legal Description

DESCRIPTION: (ORB 2310, PG 6264)

PARCEL 1:

LOTS 1 THROUGH 17. PROSPECT ADDITION. ACCORDING TO THE MAP OR PLAT THEREOF RECORDED IN PLAT BOOK 5. PAGE 19, OF THE PUBLIC RECORDS OF MANATEE COUNTY, FLORIDA. LESS THE PORTIONS THEREOF CONVEYED TO THE STATE OF FLORIDA AS DESCRIBED IN DEED BOOK 382. PAGE 63 AND IN OFFICIAL RECORD BOOK 737, PAGE 796, PUBLIC RECORDS OF MANATEE COUNTY, FLORIDA.

AND

BEGIN AT THE SW CORNER OF MANATEE AND PROSPECT AVENUE (NOW MANATEE AVENUE AND 15TH STREET) IN THE CITY OF BRADENTON, FLORIDA, RUNNING THENCE SOUTH ALONG THE WEST SIDE OF PROSPECT AVENUE (15TH STREET) 127 2/3 FEET FOR A POINT OF BEGINNING; THENCE SOUTH ALONG THE WEST SIDE OF SAID PROSPECT AVENUE (15TH STREET) 65 FEET; THENCE WEST PARALLEL WITH MANATEE AVENUE TO WARES CREEK; THENCE NORTH ALONG WARES CREEK TO A POINT DUE WEST THE POINT OF BEGINNING; THENCE EAST TO THE POINT OF BEGINNING. LYING AND BEING IN THE SW 1/4 OF THE SW 1/4 OF SECTION 26, TOWNSHIP 34 SOUTH, RANGE 17 EAST.

AND

BEGINNING AT A POINT ON THE WEST SIDE OF PROSPECT AVENUE (15TH STREET WEST) IN THE CITY OF BRADENTON, FLORIDA, 264 FEET SOUTH FROM THE SOUTHWEST CORNER OF PROSPECT AVENUE AND MANATEE AVENUE. THE SAME BEING THE NORTHEAST CORNER OF LOT OWNED BY MRS. SARAH O. WEBBER; THENCE RUN NORTH ALONG THE WEST SIDE OF PROSPECT AVENUE (15TH STREET), THE DISTANCE OF 71 AND 1/3 FEET; THENCE WEST ON A LINE PARALLEL WITH THE CENTER LINE OF MANATEE AVENUE TO THE BANK OF WARE'S CREEK; THENCE SOUTH ALONG THE MARGIN OF SAID CREEK TO THE NORTHWEST CORNER OF MRS. SARAH O. WEBBER'S LOT; THENCE EAST TO POINT OF BEGINNING. IN THE SW 1/4 OF THE SW 1/4 OF SECTION 26, TOWNSHIP 34 SOUTH, RANGE 17 EAST.

AND

BLOCK "A" OF BALLARD'S ADDITION, AS PER PLAT THEREOF RECORDED IN PLAT BOOK 1. PAGES 73 AND 103, OF THE PUBLIC RECORDS OF MANATEE COUNTY, FLORIDA.

PARCEL 2:

BEGIN AT THE SE CORNER OF BLOCK "A" OF BALLARD'S ADDITION, AS PER PLAT THEREOF RECORDED IN PLAT BOOK 1, PAGE 103 OF THE PUBLIC RECORDS OF MANATEE COUNTY, FLORIDA; THENCE DUE WEST ALONG SOUTH BOUNDARY OF SAID BLOCK "A", A DISTANCE OF 349.35 FEET FOR A POINT OF BEGINNING; THENCE NORTH 100 FEET TO THE NORTH LINE OF SAID BLOCK "A"; THENCE WEST TO THE PRESENT SEAWALL; THENCE SOUTHERLY ALONG SAID SEAWALL TO A POINT THAT INTERSECTS WITH THE SOUTH BOUNDARY LINE OF SAID BLOCK 'A' EXTENDED WEST; THENCE EAST APPROXIMATELY 150 FEET TO POINT OF BEGINNING; TOGETHER WITH ALL RIPARIAN RIGHTS THEREUNTO BELONGING.

THE WEST 1/2 OF THE FOLLOWING DESCRIBED LAND, TO WIT:

BEGIN AT THE SE CORNER OF BLOCK 'A' OF BALLARD'S ADDITION, AS PER PLAT THEREOF RECORDED IN PLAT BOOK 1, PAGE 103 OF THE PUBLIC RECORDS OF MANATEE COUNTY, FLORIDA; THENCE WEST ALONG SOUTH BOUNDARY OF SAID BLOCK "A", 255 FEET FOR POINT OF BEGINNING; THENCE NORTH 100 FEET TO NORTH LINE OF SAID BLOCK "A"; THENCE WEST 94.35 FEET; THENCE SOUTH 100 FEET; THENCE EAST 94.35 FEET TO THE POINT OF BEGINNING.

ALL OF WHICH BEING MORE PARTICULARLY DESCRIBED AS FOLLOWS :

BEGINNING AT THE SOUTHEAST CORNER OF BLOCK "A" AS SHOWN AND DESIGNATED ON A PLAT ENTITLED "BALLARD'S ADDITION" RECORDED AMONG THE PUBLIC RECORDS OF MANATEE COUNTY, FLORIDA IN PLAT BOOK 1, PAGE 103; THENCE ALONG THE SOUTH BOUNDARY OF SAID BLOCK "A", N 88°33'22" W, A DISTANCE OF 500.73 FEET TO THE MEAN HIGH WATER LINE OF WARE'S CREEK; SAID MEAN HIGH WATER LINE LYING ON THE FACE OF AN EXISTING SEAWALL: THENCE ALONG THE FACE OF THE SEAWALL AND MEAN HIGH WATER LINE. THE FOLLOWING FIFTEEN COURSES AND DISTANCES:

1.	N 12°39'31" E	6.76'	9.	N 09°11'57" E	43.76'
2.	N 12°46'37" E	17.11'	10.	N 09°29'30" E	17.87'
3.	N 15°10'26" E	27.26'	11.	N 09°21'12" E	9.20'
4.	N 13°20'37" E	16.92'	12.	N 05°12'39" E	38.95'
5.	N 13°07'25" E	14.16'	13.	N 03°38'41" E	10.26'
6.	N 12°59'36" E	30.96'	14.	N 03°24'49" E	36.01'
7.	N 13°04'44" E	32.90'	15.	N 02°32'26" E	11.30'
8.	N 13°00'53" E	24.46'			

THENCE N 00°03'17" W, A DISTANCE OF 13.09 FEET TO A POINT ON THE SOUTHERLY RIGHT-OF-WAY LINE OF STATE ROAD 64 (MANATEE AVENUE): THENCE ALONG SAID RIGHT-OF-WAY LINE. S88°39'29' E. A DISTANCE OF 393.65 FEET TO A POINT OF CURVATURE OF A CURVE CONCAVE SOUTHWESTERLY HAVING A RADIUS OF 55.00 FEET; THENCE SOUTHEASTERLY ALONG THE ARC OF SAID CURVE THROUGH A CENTRAL ANGLE OF 80°07'56". A DISTANCE OF 76.92 FEET TO A POINT OF NON-TANGENCY; SAID POINT LYING ON THE WESTERLY RIGHT-OF-WAY LINE OF 15TH STREET WEST; THENCE ALONG SAID RIGHT-OF-WAY LINE. S 00°42'58" W. A DISTANCE OF 301.74 FEET TO THE POINT OF BEGINNING. CONTAINING AN AREA OF 3.70 ACRES MORE OR LESS.

EXHIBIT "B"

Conceptual Site Plan

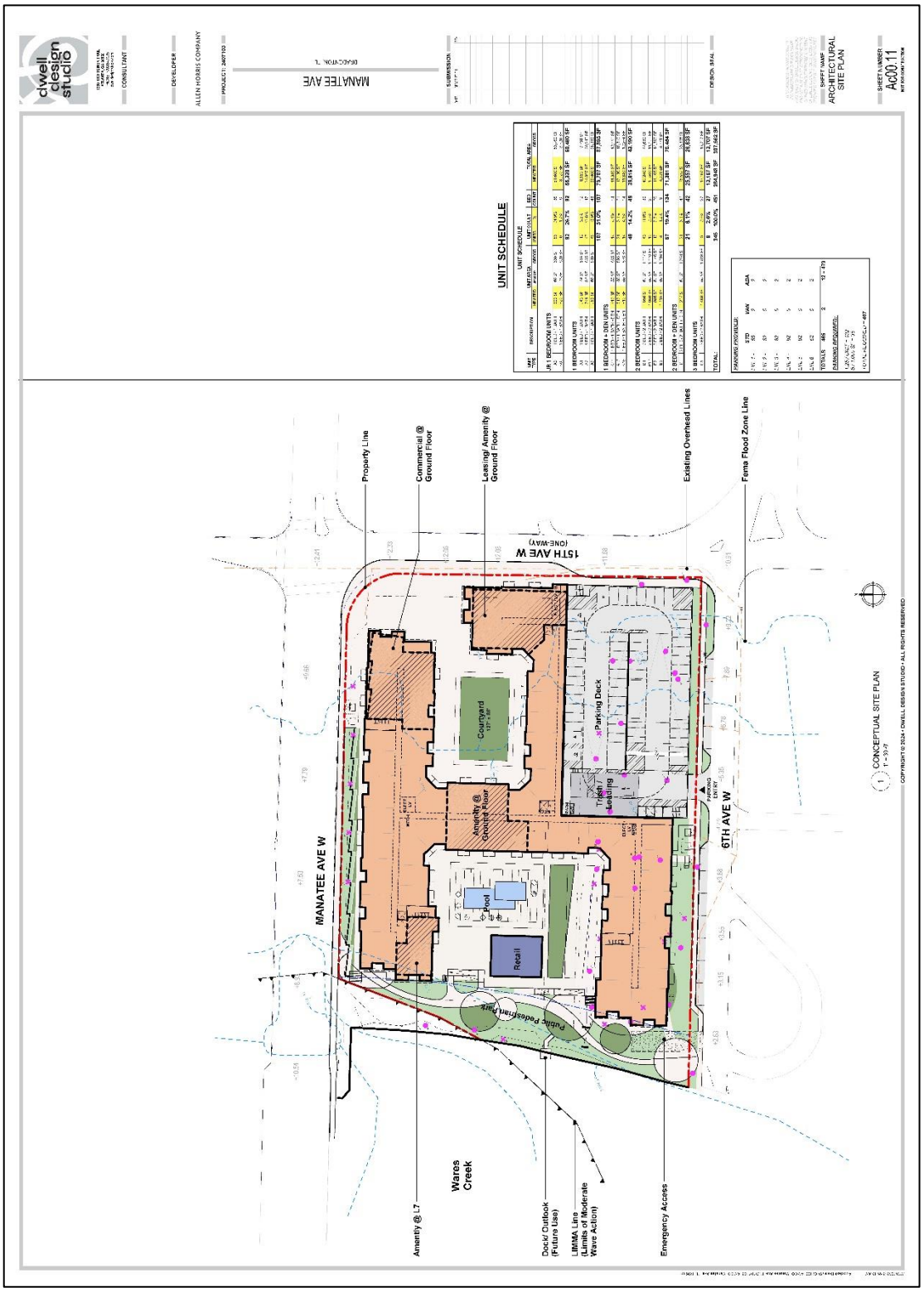

EXHIBIT "C"

Renderings and building elevations demonstrating compliance with architectural criteria.

OVERALL PROJECT ELEVATION - NORTH
1/16" = 1'-0"

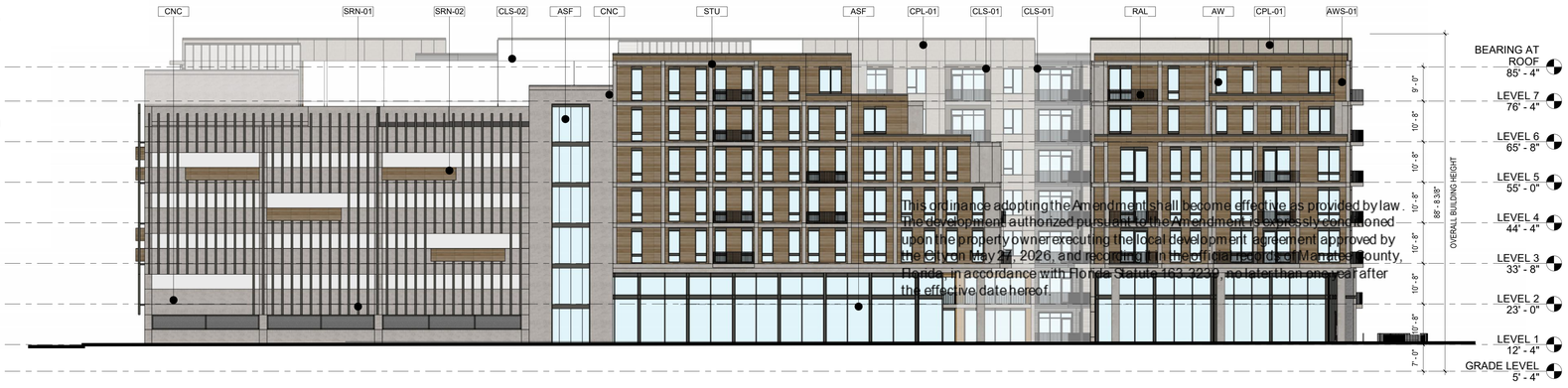

OVERALL PROJECT ELEVATION - EAST
1/16" = 1'-0"

This ordinance adopting the Amendment shall become effective as provided by law. The development authorized pursuant to the Amendment is expressly conditioned upon the property owner executing the local development agreement approved by the City on May 21, 2026, and recording it in the official records of Manatee County, Florida, in accordance with Florida Statute 163.3239, no later than one year after the effective date hereof.

CONCEPTUAL ELEVATIONS ONLY

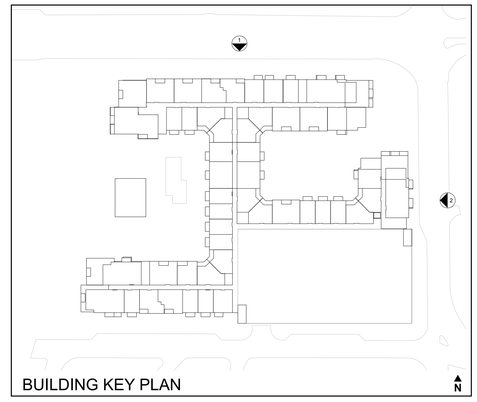

dwell design studio
1280 HIGHTOWER TRAIL
ATLANTA, GA 30350
PHONE: 770.864.1035
dwelldesignstudio.com

CONSULTANT

DEVELOPER

ALLEN MORRIS COMPANY

PROJECT: 2407103

MANATEE AVE
BRADENTON, FLORIDA

SUBMISSION

DATE	DESCRIPTION	REV
03/13/26	SCHEMATIC DESIGN SET	

DRAWN IC | CHECKED PS

DESIGN SEAL

THIS DRAWING AND ASSOCIATED DOCUMENTS ARE THE EXCLUSIVE PROPERTY OF DWELL DESIGN STUDIO AND ARE NOT TO BE REPRODUCED OR COPIED WITHOUT WRITTEN CONSENT OF DWELL DESIGN STUDIO, EXCEPT AS REQUIRED FOR THE STATED PROJECT.

SHEET NAME
OVERALL BUILDING ELEVATIONS

SHEET NUMBER
A05.10
NOT FOR CONSTRUCTION

COPYRIGHT © 2026 • DWELL DESIGN STUDIO • ALL RIGHTS RESERVED

3/13/2026 3:56:17 PM Autodesk Docs://2407103_AMCO_Manatee Ave_FL/2407103_AMCO_Manatee Ave_FL_R26.rvt

1 OVERALL PROJECT ELEVATION - SOUTH
1/16" = 1'-0"

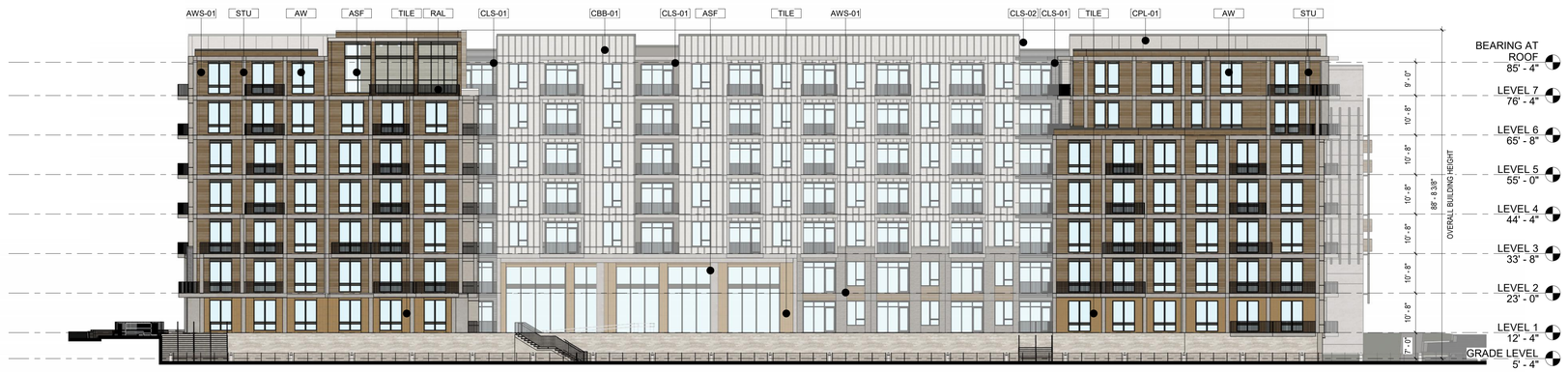

2 OVERALL PROJECT ELEVATION - WEST
1/16" = 1'-0"

CONCEPTUAL ELEVATIONS ONLY

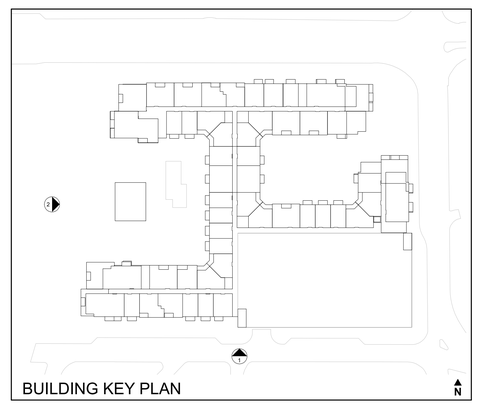

dwell design studio
1280 HIGHTOWER TRAIL
ATLANTA, GA 30350
PHONE: 770.864.1035
dwelldesignstudio.com

CONSULTANT

DEVELOPER

ALLEN MORRIS COMPANY

PROJECT: 2407103

MANATEE AVE
BRADENTON, FLORIDA

SUBMISSION

DATE	DESCRIPTION	REV
03/13/26	SCHEMATIC DESIGN SET	

DRAWN IC | CHECKED PS

DESIGN SEAL

THIS DRAWING AND ASSOCIATED DOCUMENTS ARE THE EXCLUSIVE PROPERTY OF DWELL DESIGN STUDIO AND ARE NOT TO BE REPRODUCED OR COPIED WITHOUT WRITTEN CONSENT OF DWELL DESIGN STUDIO, EXCEPT AS REQUIRED FOR THE STATED PROJECT.

SHEET NAME
OVERALL BUILDING ELEVATIONS

SHEET NUMBER
A05.11
NOT FOR CONSTRUCTION

COPYRIGHT © 2026 • DWELL DESIGN STUDIO • ALL RIGHTS RESERVED

3/13/2026 3:56:28 PM Autodesk Docs://2407103_AMCO_Manatee Ave_FL/2407103_AMCO_Manatee Ave_FL_R26.rvt

1. (TOP LEFT) - MANATEE AVE & 15TH AVE INTERSECTION CORNER
2. (TOP RIGHT) - MANATEE AVE & WARES CREEK INTERSECTION CORNER
3. (BOTTOM LEFT) - VIEW FROM WARES CREEK
4. (BOTTOM RIGHT) - VIEW FROM RIVER-WALK

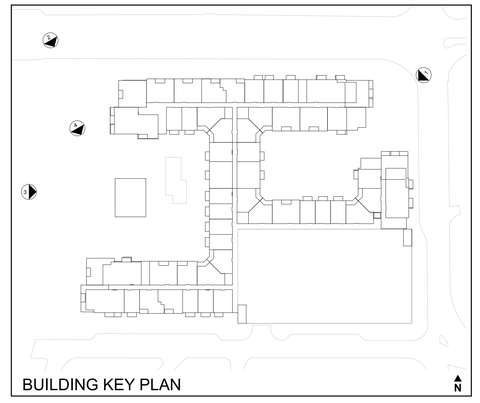

CONCEPTUAL
RENDERINGS ONLY

COPYRIGHT © 2026 • DWELL DESIGN STUDIO • ALL RIGHTS RESERVED

dwell design studio
1280 HIGHTOWER TRAIL
ATLANTA, GA 30350
PHONE: 770.864.1035
dwelldesignstudio.com

CONSULTANT

DEVELOPER

ALLEN MORRIS COMPANY

PROJECT: 2407103

MANATEE AVE
BRADENTON, FLORIDA

SUBMISSION

DATE	DESCRIPTION	REV
03/13/26	SCHEMATIC DESIGN SET	

DRAWN	CHECKED
IC	PS

DESIGN SEAL

THIS DRAWING AND ASSOCIATED DOCUMENTS ARE THE EXCLUSIVE PROPERTY OF DWELL DESIGN STUDIO AND ARE NOT TO BE REPRODUCED OR CORIED WITHOUT WRITTEN CONSENT OF DWELL DESIGN STUDIO, EXCEPT AS REQUIRED FOR THE STATED PROJECT.

SHEET NAME
BUILDING PERSPECTIVES

SHEET NUMBER
A05.30
NOT FOR CONSTRUCTION

3/13/2026 3:56:42 PM Autodesk Docs://2407103_AMCO_Manatee Ave_FL/2407103_AMCO_Manatee Ave_FL_R26.rvt

ZNS|ENGINEERING
Land Planning Engineering Surveying Landscape Architecture

OLD CITY HALL
PID # 3354500109

Hurricane Mitigation Plan

TABLE OF CONTENTS

I. INTRODUCTION 3

II. SEVERE WEATHER PREPAREDNESS AND SHELTER INFORMATION 4

III. HAZARD ANALYSIS 7

IV. CONCEPT OF OPERATIONS 9

V. INFORMATION, TRAINING AND EXERCISE 9

VI. APPENDICES 10

EXHIBIT A: EVACUATION ZONES MAP
EXHIBIT B: FLOOD ZONES MAP
EXHIBIT C: EVACUATION ROUTES AND SHELTERS

I. INTRODUCTION

The Old City Hall site is a proposed mixed-use multi-family residential development of 345 dwelling units with additional proposed small-scale commercial uses. Residential units will consist of 1br, 2br and 3br multi-family dwelling units.

Fl Stat. 163.3178(8)(a)(2) requires that a 12-hour evacuation time to shelter is maintained for a category 5 storm event as measured on the Saffir-Simpson scale and that shelter space reasonably expected to accommodate the residents of the development contemplated by a proposed comprehensive plan amendment is available.

This development meets the necessary requirements of Fl. Stat. 163.3178(8)(a)(2). Per the Florida Statewide Regional Evacuation Study for the Tampa Bay Regional Planning Council, the identified 2025 Operational Scenario Clearance Time to Shelter for Manatee County Evacuation Level A is 9.5 hours, which is less than the 12-hour evacuation time to shelter required by the Florida Statue. The City of Bradenton's procedures for evacuation state "You DO NOT have an "assigned" shelter for your area. Any open shelter near your home will accept you as a refugee from the storm and assist you and your family. Manatee County shelters are opened depending on the direction and size of the storm". This allows Manatee County to open additional shelters as necessary.

In addition to the foregoing paragraph, the City finds that the measures taken pursuant to this Plan constitute full mitigation of the project's impacts pursuant to Fl. Stat. 163.3178(8)(a).

II. SEVERE WEATHER PREPAREDNESS AND SHELTER INFORMATION

Hurricane Season Resident To-Do List:

- Check your disaster supplies kit and obtain items needed.
- To be prepared in the event of a tornado, discuss a safe place for your family to take refuge, such as a laundry room, pantry, bathroom, etc.
- Purchase a battery powered weather alert radio.
- Check with your insurance agent regarding your coverage.
- Residents agree that any vehicles parked in the parking garage onsite during a storm event will be moved to Parking Level 2, located above Base Flood Elevation.

As the Hurricane approaches:

- Be aware that hurricanes also produce tornadoes, which add to the hurricane's destructive power. Find shelter in a small interior room on the lowest floor, staying away from windows, doors, and electrical equipment. Avoid rooms near tall structures like trees or power lines. Taking refuge in such spaces provides protection from flying debris
- Listen for weather updates on local station and on NOAA weather radio. Do not trust rumors and stay tuned to the latest information.
- Refill prescriptions. Maintain at least a two-week supply during hurricane

season.

- Clear your patio or balcony of lawn furniture, potted plants, bicycles, trashcans, etc.
- Protect your windows and glass doors. Brace double entry and garage doors at the top and bottom.
- Fill your car's tank and check the oil, water and tires. Gas pumps do not operate without electricity.
- Get cash. Banks and ATMs will not be in operation without electricity and few stores will be able to accept credit cards or personal checks.

1. Emergency Public Shelter Locations.

   For details of shelter locations in the area, please see the Shelters Map (Exhibit C). Nearby shelters for 2025 include: First Baptist Church Bradenton, located approximately 400 feet away, Rogers Garden Elementary School, located approximately 1.1 miles away, and Manatee High School, which is approximately 1.6 miles away from the subject site. The nearest pet-friendly shelter is Miller Elementary School located approximately 1.8 miles away.

   Please note the following:

   - Shelter openings may vary with each emergency. Stay tuned to local media for a listing of which shelters will be opened for an event.
   - Do not go to the shelter until local officials announce through the media that the shelter is open.
   - Shelter openings will differ by size and intensity of a disaster.
   - For additional information, refer to the Hurricane Guide attached to this booklet.

2. Evacuation Routes.

   For details on Evacuation Routes, please see the Evacuation Routes and Shelters Map (Exhibit C).

3. Residential Re-Entry Procedures, if applicable.

Re-Entry Information:

1. Be patient. Access to affected areas will be controlled. You will not be able to return to your home until search and rescue operations are completed, and safety hazards such as downed trees and power lines are cleared. It may take up to three days for emergency crews to reach your neighborhood. It may take two to four weeks before utilities are restored.
2. Have a valid ID. Security operation may include checkpoints. Valid identification with your current local address will be required.
3. Avoid driving. Roads will have debris, which can puncture your tires. Do not add to the congestion of relief workers, supply trucks, law enforcement, etc.

4. Do not sightsee, especially at night.

Safety Tips:

1. Avoid downed or dangling utility wires. Metal fences may have been energized by fallen wires. Be especially careful when cutting or clearing fallen trees. They may have power lines tangled in them.
2. Beware of snakes, insects and animals driven to higher ground by floods.
3. Enter your home with caution. Open windows and doors to ventilate and dry your home.
4. If there has been flooding, have an electrician inspect your home or office before turning on the breaker.
5. Be careful with fire. Do not strike a match until you are sure there are no broken gas lines. Avoid candles. Use battery operated flashlights and lanterns instead.
6. Keep grills outdoors in a well-ventilated area.
7. Use your telephone only in emergencies to keep lines open for emergency communications.

After a disaster, you may be without power, water, food or any of the services or businesses we rely on. An immediate response may not be possible, so residents must be prepared to be self-reliant for several weeks.

Water Precautions:

Whenever widespread flooding occurs, there is a potential for bacterial contamination. Bacteria can lead to life-threatening dehydration for people and their pets, if untreated.

Disinfect any tap water you drink or use for cooking or cleaning. You must purify the tap water until officials notify you of its safety. Bring water to a rolling boil for a full 10 minutes. Let the water sit at least 10 minutes before using.

The Leasing and Management Company will be responsible for providing emergency information to residents in the form of brochures and City of Bradenton Electronic emergency media available in the leasing office.

III. HAZARD ANALYSIS

This development has the potential for flooding due to hurricanes. The site is located in the Zone A Evacuation Area. An Evacuation Level Map has also been included as Exhibit A. The Old City Hall proposed development will have 345 multi-family units, with a total estimated population of 419, including an estimated 300 full-time residents and an additional estimated seasonal population of 119.

The proposed finished flood elevation of the first floor is estimated at 12.5 feet. The site is located in Flood Zones AE and X. A Flood Zone map has been included as Exhibit B.

IV. CONCEPT OF OPERATIONS

The Owner/Management will be responsible for implementing the Mitigation Evacuation Plan, and the Mitigation Evacuation Plan will go into effect once a hurricane watch is posted or there is an emergency situation that will possibly affect this development.

Once a hurricane watch is posted, property management employees will be notified to secure community property such as patio furniture, pool equipment; sales center, i.e., computer files, important documents, etc.

V. INFORMATION, TRAINING AND EXERCISE FOR RESIDENTS

Emergency information such as hurricane evacuation, tornado preparedness, and shelter information, along with this Mitigation Evacuation Plan will be provided to each resident at the time of the initial lease. Updates will provided periodically to residents through resident meetings and electronic media.

An up to date list of names, addresses, telephone numbers, including seasonal contact numbers, if applicable, of all residents will be maintained in the leasing office. A roster of Community Employees and Companies with emergency preparedness related activities will be posted in the Leasing Office.

The utility providers for this development are:

City of Bradenton
101 Old Main Street
Bradenton, FL 34205
(941) 932-9434

Frontier
6102 14th Street West
Bradenton, FL 34207
(941) 727-4348

Florida Power & Light
P. O. Box 025576
Miami, FL 33102
(941) 917-0708

Spectrum (cable)
5413 East State Road 64
Bradenton, FL 34208
(866) 874-2389

1. List the names and telephones numbers of other important telephone numbers (e.g., the sheriff, fire district, emergency management, health department, Red Cross, etc.), as applicable.

Other important numbers include:

Bradenton Police Department	**(941) 932-9300**
Bradenton Fire Department	**(941) 932-9600**
Health Department	**(941) 748-0747**
Red Cross	**(941) 792-8686**
Emergency Management	**(941) 749-3500**
Emergency	**911**

EXHIBIT A : EVACUATION ZONES MAP

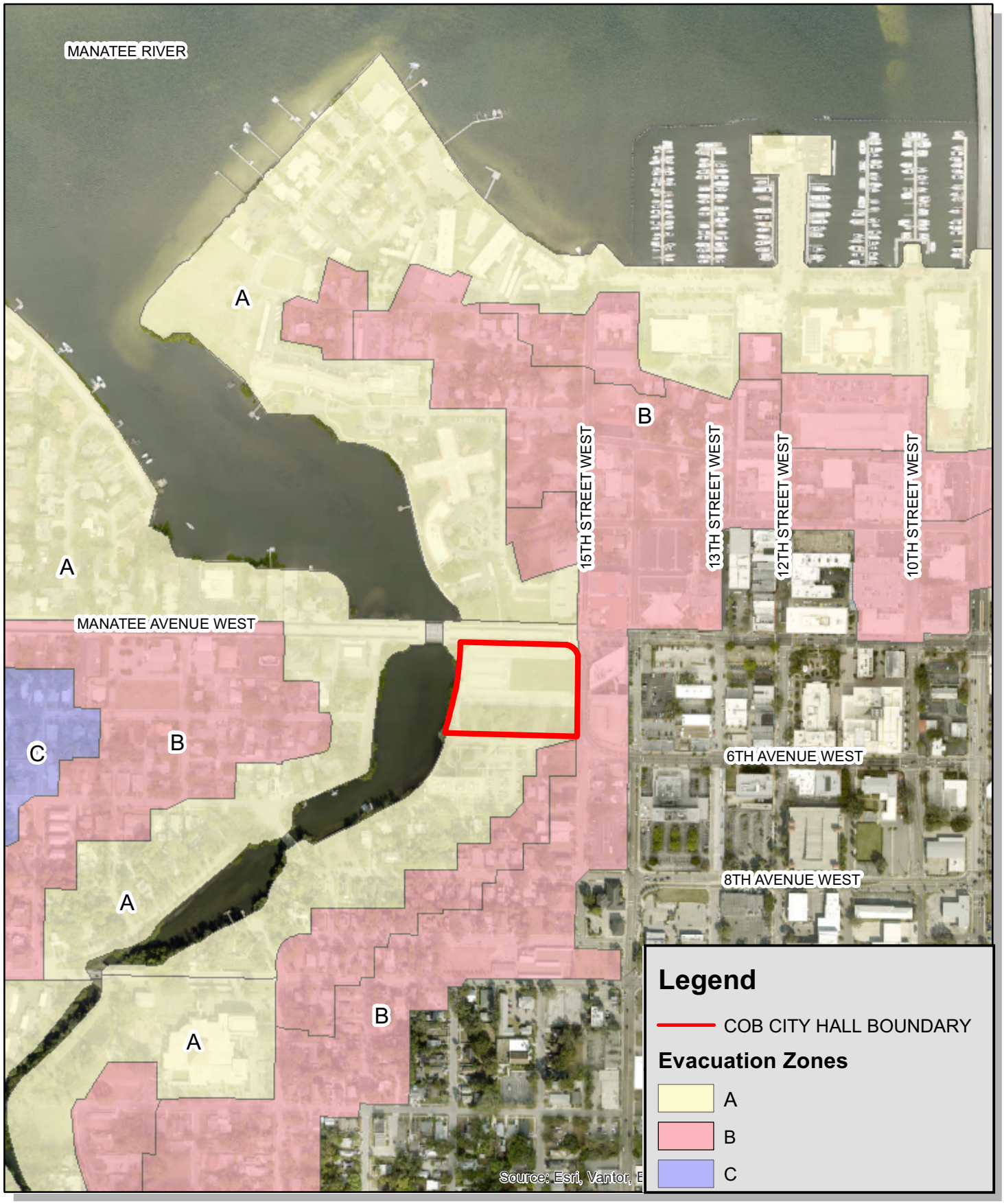

ZNS ENGINEERING
Land Planning Engineering Surveying Landscape Architecture
1023 MANATEE AVE WEST, 7TH FLOOR
BRADENTON, FL 34205
TELEPHONE 941.748.8080 FAX 941.748.3316

OLD CITY HALL SITE

SECTION 26, TOWNSHIP 34 SOUTH, RANGE 17 EAST

SCALE: 1" = 500'
SOURCE: MANATEE COUNTY

N

THIS MAP IS PROVIDED FOR GRAPHICAL REPRESENTATIO
AND GENERAL REFERENCE ONLY. THE DATA CONTAINE
HEREIN IS SUBJECT TO CHANGE AND IS NOT WARRANT

EXHIBIT B : FLOOD ZONES MAP

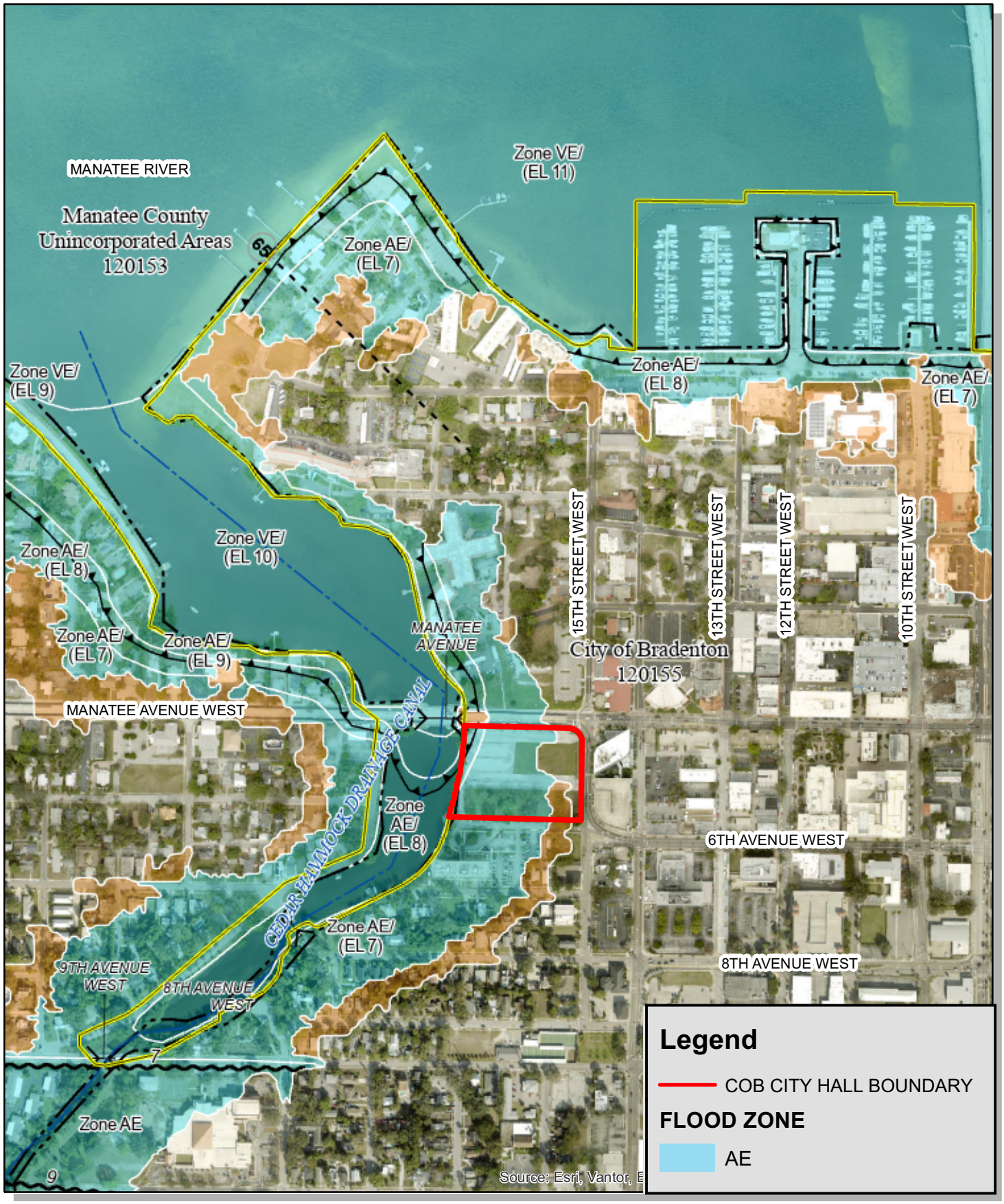

ZNS ENGINEERING
Land Planning Engineering Surveying Landscape Architecture
1023 MANATEE AVE WEST, 7TH FLOOR
BRADENTON, FL 34205
TELEPHONE 941.748.8080 FAX 941.748.3316

OLD CITY HALL SITE

SECTION 26, TOWNSHIP 34 SOUTH, RANGE 17 EAST

SCALE: 1" = 500'
SOURCE: MANATEE COUNTY

N

THIS MAP IS PROVIDED FOR GRAPHICAL REPRESENTATIO
AND GENERAL REFERENCE ONLY. THE DATA CONTAINE
HEREIN IS SUBJECT TO CHANGE AND IS NOT WARRANT

EXHIBIT C : EVACUATION ROUTE & SHELTER MAP

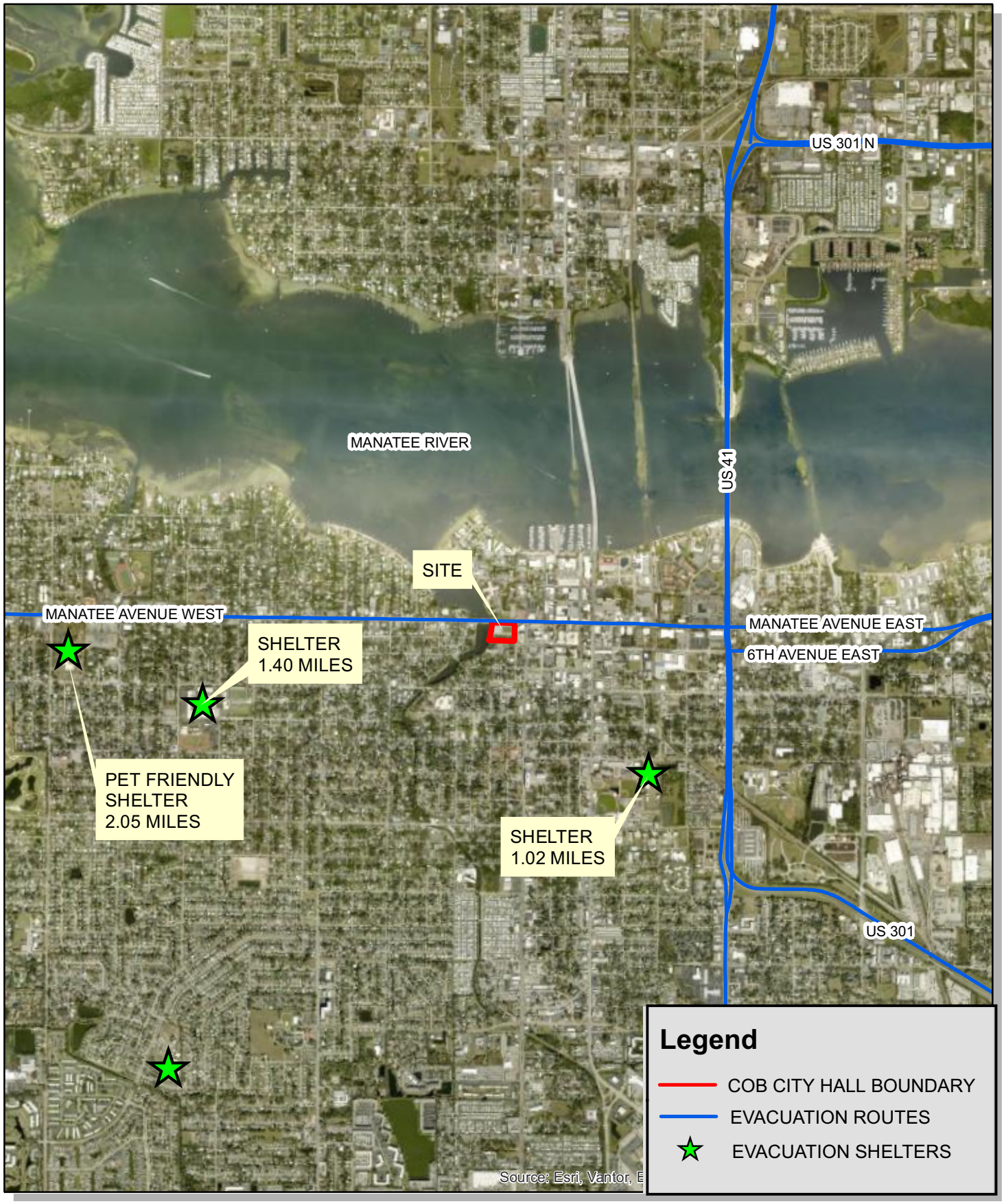

ZNS ENGINEERING
Land Planning Engineering Surveying Landscape Architecture
1023 MANATEE AVE WEST, 7TH FLOOR
BRADENTON, FL 34205
TELEPHONE 941.748.8080 FAX 941.748.3316

OLD CITY HALL SITE

SECTION 26, TOWNSHIP 34 SOUTH, RANGE 17 EAST

SCALE: 1" = 1 MILE
SOURCE: MANATEE COUNTY

N

THIS MAP IS PROVIDED FOR GRAPHICAL REPRESENTATIO
AND GENERAL REFERENCE ONLY. THE DATA CONTAINE
HEREIN IS SUBJECT TO CHANGE AND IS NOT WARRANT

AGENDA ITEM NO. 7.e

Item Cover Page

CITY COUNCIL MEETING AGENDA ITEM REPORT

DATE: May 27, 2026

SUBMITTED BY: Tamara Melton, Legislative

ITEM TYPE: Ordinance

AGENDA SECTION: BUSINESS/ADVERTISING, PETITIONS, HEARINGS & COMMUNICATIONS

SUBJECT: ORDINANCE 4077 - FIRST READING
AN ORDINANCE OF THE CITY OF BRADENTON, FLORIDA, PROPOSING AN AMENDMENT TO THE BRADENTON CITY CHARTER; PROPOSING A CHARTER AMENDMENT TO SECTION 8 OF THE CITY CHARTER TO REMOVE THE DESIGNATION OF THE MAYOR AS THE "EX OFFICIO PRESIDENT OF THE COUNCIL," TO REMOVE THE MAYOR'S RIGHT TO CAST A VOTE IN THE EVENT OF A TIE, AND TO PROVIDE THAT THE MAYOR IS NOT A MEMBER OF THE CITY COUNCIL; CALLING FOR A REFERENDUM ON THE PROPOSED AMENDMENT TO THE CHARTER TO BE HELD AT THE GENERAL ELECTION ON NOVEMBER 3, 2026; PROVIDING THE BALLOT TITLE AND BALLOT SUMMARY FOR THE REFERENDUM; PROVIDING FOR DIRECTION TO THE CITY CLERK AND COORDINATION WITH THE MANATEE COUNTY SUPERVISOR OF ELECTIONS; PROVIDING FOR SEVERABILITY, CONFLICTS, AND AN EFFECTIVE DATE.

SUGGESTED ACTION: No action is required at first reading. The second reading and public hearing are scheduled for June 10, 2026.

Is this item Quasi-Judicial?
No

Does this item require a public hearing?
No

EXPLANATION:
At the City Council workshop on May 6, there was a discussion regarding removing the designation of the Mayor as the "ex officio president of the City Council", remove the Mayor's right to cast a vote in the event of a tie, and to provide that the Mayor is not a member of City Council. Council agreed that Attorney Rudacille would draft an ordinance for a referendum to go before voters at the general election to be held on November 3, 2026. This is the first reading of said ordinance.

FINANCIAL IMPACT:
N/A

ATTORNEY REVIEW/RECOMMENDATION:
Attorney Rudacille drafted the ordinance.

SUGGESTED MOTION:
No action is required at first reading. The second reading and public hearing are scheduled for June 10, 2026.

ATTACHMENTS:
Ordinance 4077

ORDINANCE NO. 4077

AN ORDINANCE OF THE CITY OF BRADENTON, FLORIDA, PROPOSING AN AMENDMENT TO THE BRADENTON CITY CHARTER; PROPOSING A CHARTER AMENDMENT TO SECTION 8 OF THE CITY CHARTER TO REMOVE THE DESIGNATION OF THE MAYOR AS THE "EX OFFICIO PRESIDENT OF THE COUNCIL," TO REMOVE THE MAYOR'S RIGHT TO CAST A VOTE IN THE EVENT OF A TIE, AND TO PROVIDE THAT THE MAYOR IS NOT A MEMBER OF THE CITY COUNCIL; CALLING FOR A REFERENDUM ON THE PROPOSED AMENDMENT TO THE CHARTER TO BE HELD AT THE GENERAL ELECTION ON NOVEMBER 3, 2026; PROVIDING THE BALLOT TITLE AND BALLOT SUMMARY FOR THE REFERENDUM; PROVIDING FOR DIRECTION TO THE CITY CLERK AND COORDINATION WITH THE MANATEE COUNTY SUPERVISOR OF ELECTIONS; PROVIDING FOR SEVERABILITY, CONFLICTS, AND AN EFFECTIVE DATE.

WHEREAS, the City Council has determined that it is advisable to submit the proposed charter amendment set forth herein to the electors of the City of Bradenton for their consideration at an upcoming election, pursuant to the City Council's authority under Section 166.031, Florida Statutes; and

WHEREAS, for purposes of this Ordinance, underlined type shall constitute additions to the original text, *** shall constitute ellipses to the original text, and ~~strikethrough~~ shall constitute deletions to the original text.

NOW, THEREFORE, BE IT ORDAINED BY THE CITY COUNCIL OF THE CITY OF BRADENTON, FLORIDA:

Section 1. Findings of Fact. The foregoing whereas clauses are hereby adopted as findings of fact and are otherwise fully incorporated herein.

Section 2. Proposed Charter Amendment. The amendment to the City Charter for the City of Bradenton, Florida which is appended and attached as **Exhibit "A."** to this Ordinance is hereby adopted by reference by the City Council to be submitted to the electors of the City of Bradenton for referendum.

Section 3. Referendum Called. A referendum on the proposed adoption of the Charter amendment appended hereto and adopted by reference as Exhibit "A" to this Ordinance shall be placed on the ballot at the general election to be held on November 3, 2026. The ballot title and ballot summary for the proposed charter amendments is set forth in Exhibit "A." The charter amendment shall become effective upon approval of its corresponding ballot question in such referendum.

Section 4. Direction to City Clerk and Coordination with Supervisor of Elections. The City Clerk is hereby authorized and directed to coordinate with the Manatee County Supervisor of Elections to include the ballot question attached hereto as Exhibit "A" on the ballot at the general election to be held in the City of Bradenton on November 3, 2026. The City Clerk is directed to see the satisfaction of the requirements of Section 100.342, Florida Statutes, which provides that "there shall be at least 30 days' notice of the election or referendum by publication in a newspaper of general circulation in the . . . municipality . . .. The publication shall be made at least twice, once in the fifth week and once in the third week prior to the week in which the election or referendum is to be held."

Section 5. Severability. The provisions of this Ordinance are deemed severable. In the event that any word (s), phrase(s), portion(s), sub-sub-sections(s), sub-section(s), or section(s) of this Ordinance is for any reason whatsoever held to be invalid, illegal, unconstitutional, contrary to law, or against public policy, by any court, administrative agency, or other body with competent jurisdiction, such word (s), phrase(s), portion(s), sub-sub-sections(s), sub-section(s), or section(s) of this Ordinance shall be null and void, and shall be deemed severed, and a separate, distinct, and independent provision from the remaining provisions of this Ordinance, and such holding shall in no manner affect the validity of the remaining words, phrases, portions, sub-sub-sections, sub-sections, or sections of this Ordinance, which shall remain in full force and effect. This Ordinance shall be construed in a manner to accomplish, to the greatest extent legally possible, the purposes of this Ordinance as expressed herein.

Section 6. Codification. All ordinances or parts thereof in conflict with this Ordinance are hereby repealed to the extent of such conflict.

Section 7. Effective Date. This Ordinance shall become effective upon final adoption by the City Council. The Charter amendment provided herein shall be effective only upon approval of a majority of electors voting on the measure, effective upon certification of election results.

FIRST READING	
PUBLICATION DATE	
SECOND READING	

PASSED AND DULY ADOPTED, BY THE CITY COUNCIL OF THE CITY OF BRADENTON, FLORIDA, with a quorum present and voting, this ____, day of _____, 2026.

CITY OF BRADENTON, FLORIDA

_____
Gene Brown, Mayor

ATTEST:

By: _____
Tamara Melton, City Clerk

APPROVED AS TO FORM:

By: _____
Scott Rudacille, City Attorney

EXHIBIT "A"

BALLOT QUESTION

Ballot Proposal: The ballot title and ballot summary for Question #1 are as follows:

REMOVE MAYOR'S TIE VOTE RIGHT AND EX OFFICIO PRESIDENT DESIGNATION; ADD MAYOR NOT COUNCIL MEMBER

Shall the Bradenton City Charter be amended to remove the Mayor's right to cast a vote in the event of a tie; and, to remove the designation of Mayor as "ex officio president of the Council" and add language to provide that the Mayor is not a member of the City Council.

Yes _____

No _____

Ballot Language Translation: The Spanish language translation for the ballot title and ballot summary for the aforementioned question is as follows:

ELIMINAR EL DERECHO DEL ALCALDE A EMITIR EL VOTO DE DESEMPATE Y LA DESIGNACIÓN DE PRESIDENTE EX OFFICIO; AGREGAR QUE EL ALCALDE NO ES MIEMBRO DEL CONCEJO

¿Deben enmendarse los Estatutos de la Municipalidad de Bradenton para eliminar el derecho del Alcalde a emitir un voto en caso de empate; y, eliminar la designación del Alcalde como "presidente ex officio del Concejo" y agregar lenguaje que disponga que el Alcalde no es miembro del Concejo Municipal?

Si _____

No _____

Text Revisions: Upon approval of this question at referendum, the following portion of the Bradenton City Charter is amended to read as follows:

Sec. 8. - City council officers; election; general powers, duties.

As soon after assuming their duties as practicable, the council shall assemble and elect one of their number vice-mayor. The mayor shall not be a member of the council, but ~~T~~the mayor ~~as ex officio president of the council~~ shall preside at the meetings of the council. ~~He or she shall be entitled to vote in the event of a tie, but not otherwise.~~ He or she shall have power to appoint all committees. Both the ~~president~~mayor and vice-mayor shall perform such further duties and have such further powers as may be prescribed by ordinance. The vice-mayor shall perform the duties of and have the powers of mayor during the temporary absence or temporary disability of the mayor, with the exception of the veto power~~, and the power to break ties after a council vote~~. While performing such duties of acting mayor, the vice-mayor shall retain the right to vote as a council member. In the case, however, of death, removal or resignation of the mayor, or in the event the mayor's position becomes vacant, the vice-mayor of the council shall assume the office of mayor until the next general municipal election, at which time a new mayor shall be elected, which election shall be only for the unexpired term. A vacancy in the office of council member for the vice-mayor's ward shall arise upon the vice-mayor's assumption of the office of mayor pursuant to the preceding sentence.

AGENDA ITEM NO. 7.f

Item Cover Page

CITY COUNCIL MEETING AGENDA ITEM REPORT

DATE: May 27, 2026

SUBMITTED BY: Tamara Melton, Legislative

ITEM TYPE: Ordinance

AGENDA SECTION: BUSINESS/ADVERTISING, PETITIONS, HEARINGS & COMMUNICATIONS

SUBJECT: ORDINANCE 4078 - FIRST READING
AN ORDINANCE OF THE CITY OF BRADENTON, FLORIDA, PROPOSING AN AMENDMENT TO THE BRADENTON CITY CHARTER; PROPOSING A CHARTER AMENDMENT TO ADD A SECTION 14 TO THE CITY CHARTER TO PROVIDE FOR TERM LIMITS FOR THE MAYOR AND COUNCIL MEMBERS; CALLING FOR A REFERENDUM ON THE PROPOSED AMENDMENT TO THE CHARTER TO BE HELD AT THE GENERAL ELECTION ON NOVEMBER 3, 2026; PROVIDING THE BALLOT TITLE AND BALLOT SUMMARY FOR THE REFERENDUM; PROVIDING FOR DIRECTION TO THE CITY CLERK AND COORDINATION WITH THE MANATEE COUNTY SUPERVISOR OF ELECTIONS; PROVIDING FOR SEVERABILITY, CONFLICTS, AND AN EFFECTIVE DATE.

SUGGESTED ACTION: No action is required at first reading. The second reading and public hearing are scheduled for June 10, 2026.

Is this item Quasi-Judicial?
No

Does this item require a public hearing?
No

EXPLANATION:
At the City Council workshop on May 6, there was a discussion regarding term limits for the Mayor and City Council. Council agreed that Attorney Rudacille would

draft an ordinance for a referendum to go before voters at the general election to be held on November 3, 2026. This is the first reading of said ordinance.

FINANCIAL IMPACT:
N/A

ATTORNEY REVIEW/RECOMMENDATION:
Attorney Rudacille drafted the ordinance.

SUGGESTED MOTION:
No action is required at first reading. The second reading and public hearing are scheduled for June 10, 2026.

ATTACHMENTS:
Ordinance 4078

ORDINANCE NO. 4078

AN ORDINANCE OF THE CITY OF BRADENTON, FLORIDA, PROPOSING AN AMENDMENT TO THE BRADENTON CITY CHARTER; PROPOSING A CHARTER AMENDMENT TO ADD A SECTION 14 TO THE CITY CHARTER TO PROVIDE FOR TERM LIMITS FOR THE MAYOR AND COUNCIL MEMBERS; CALLING FOR A REFERENDUM ON THE PROPOSED AMENDMENT TO THE CHARTER TO BE HELD AT THE GENERAL ELECTION ON NOVEMBER 3, 2026; PROVIDING THE BALLOT TITLE AND BALLOT SUMMARY FOR THE REFERENDUM; PROVIDING FOR DIRECTION TO THE CITY CLERK AND COORDINATION WITH THE MANATEE COUNTY SUPERVISOR OF ELECTIONS; PROVIDING FOR SEVERABILITY, CONFLICTS, AND AN EFFECTIVE DATE.

WHEREAS, the City Council has determined that it is advisable to submit the proposed charter amendment set forth herein to the electors of the City of Bradenton for their consideration at an upcoming election, pursuant to the City Council's authority under Section 166.031, Florida Statutes; and

WHEREAS, for purposes of this Ordinance, underlined type shall constitute additions to the original text, *** shall constitute ellipses to the original text, and ~~strikethrough~~ shall constitute deletions to the original text.

NOW, THEREFORE, BE IT ORDAINED BY THE CITY COUNCIL OF THE CITY OF BRADENTON, FLORIDA:

Section 1. Findings of Fact. The foregoing whereas clauses are hereby adopted as findings of fact and are otherwise fully incorporated herein.

Section 2. Proposed Charter Amendment. The amendment to the City Charter for the City of Bradenton, Florida which is appended and attached as **Exhibit "A."** to this Ordinance is hereby adopted by reference by the City Council to be submitted to the electors of the City of Bradenton for referendum.

Section 3. Referendum Called. A referendum on the proposed adoption of the Charter amendment appended hereto and adopted by reference as Exhibit "A" to this Ordinance shall be placed on the ballot at the general election to be held on November 3, 2026. The ballot title and

ballot summary for the proposed charter amendments is set forth in Exhibit "A." The charter amendment shall become effective upon approval of its corresponding ballot question in such referendum.

Section 4. Direction to City Clerk and Coordination with Supervisor of Elections. The City Clerk is hereby authorized and directed to coordinate with the Manatee County Supervisor of Elections to include the ballot question attached hereto as Exhibit "A" on the ballot at the general election to be held in the City of Bradenton on November 3, 2026. The City Clerk is directed to see the satisfaction of the requirements of Section 100.342, Florida Statutes, which provides that "there shall be at least 30 days' notice of the election or referendum by publication in a newspaper of general circulation in the . . . municipality . . .. The publication shall be made at least twice, once in the fifth week and once in the third week prior to the week in which the election or referendum is to be held."

Section 5. Severability. The provisions of this Ordinance are deemed severable. In the event that any word (s), phrase(s), portion(s), sub-sub-sections(s), sub-section(s), or section(s) of this Ordinance is for any reason whatsoever held to be invalid, illegal, unconstitutional, contrary to law, or against public policy, by any court, administrative agency, or other body with competent jurisdiction, such word (s), phrase(s), portion(s), sub-sub-sections(s), sub-section(s), or section(s) of this Ordinance shall be null and void, and shall be deemed severed, and a separate, distinct, and independent provision from the remaining provisions of this Ordinance, and such holding shall in no manner affect the validity of the remaining words, phrases, portions, sub-sub-sections, sub-sections, or sections of this Ordinance, which shall remain in full force and effect. This Ordinance shall be construed in a manner to accomplish, to the greatest extent legally possible, the purposes of this Ordinance as expressed herein.

Section 6. Codification. All ordinances or parts thereof in conflict with this Ordinance are hereby repealed to the extent of such conflict.

Section 7. Effective Date. This Ordinance shall become effective upon final adoption by the City Council. The Charter amendment provided herein shall be effective only upon approval of a majority of electors voting on the measure, effective upon certification of election results.

FIRST READING	
PUBLICATION DATE	
SECOND READING	

PASSED AND DULY ADOPTED, BY THE CITY COUNCIL OF THE CITY OF BRADENTON, FLORIDA, with a quorum present and voting, this ____, day of _____, 2026.

CITY OF BRADENTON, FLORIDA

_____
Gene Brown, Mayor

ATTEST:

By: _____
Tamara Melton, City Clerk

APPROVED AS TO FORM:

By: _____
Scott Rudacille, City Attorney

EXHIBIT "A"

BALLOT QUESTION

Ballot Proposal: The ballot title and ballot summary for Question #1 are as follows:

PROVIDING FOR TERM LIMITS FOR THE MAYOR AND CITY COUNCIL MEMBERS

Shall the Bradenton City Charter be amended to provide term limits for the Mayor and City Council. The terms shall be limited to three full, consecutive terms in the same office, beginning January 2028. A break in service of a minimum of two years after service of three full, consecutive terms in the same office is required before a mayor or council member can run again for the same office.

Yes _____

No _____

Ballot Language Translation: The Spanish language translation for the ballot title and ballot summary for the aforementioned question is as follows:

ESTABLECIMIENTO DE LÍMITES DE MANDATO PARA EL ALCALDE Y LOS MIEMBROS DEL CONCEJO MUNICIPAL

¿Deberán enmendarse los Estatutos de la Municipalidad de Bradenton para establecer límites de mandato para el alcalde y el Concejo Municipal? Los mandatos estarán limitados a tres períodos completos y consecutivos en el mismo cargo, comenzando en Enero de 2028. Se requerirá una interrupción en el servicio de un mínimo de dos años después de haber servido tres períodos completos y consecutivos en el mismo cargo antes de que un alcalde o miembro del concejo pueda postularse nuevamente para el mismo cargo.

Si _____

No _____

Text Revisions: Upon approval of this question at referendum, the following portion of the Bradenton City Charter is amended to read as follows:

Sec. 14 – Qualifications - Limitation on Terms.

Effective as of the terms beginning in January of 2028, no mayor shall thereafter be elected to serve as mayor and no council member shall thereafter be elected to serve as a council member for more than three (3) consecutive four (4) year terms in the same office except as provided herein. A break in service of a minimum of two (2) years after a mayor or council member has served three (3) consecutive four (4) year terms in the same office is required before a former mayor or council member is permitted to run for election to the same office in which he or she previously served. Terms as a council member shall be deemed the same office regardless of whether different wards are represented.

AGENDA ITEM NO. 8.a

Item Cover Page

CITY COUNCIL MEETING AGENDA ITEM REPORT

DATE: May 27, 2026

SUBMITTED BY: Corey Fortin, City Administration

ITEM TYPE: Agreement

AGENDA SECTION: NEW BUSINESS BY DEPARTMENT HEADS, CITY ATTORNEY AND COUNCIL

SUBJECT: Agreement of Purchase & Sale for 308 13th Street West

SUGGESTED ACTION: Approval

Is this item Quasi-Judicial?
No

Does this item require a public hearing?
No

EXPLANATION:
The City has a compelling need to purchase the property located at 308 13th Street West for a totality of dimensional assemblage. The property was appraised at $300,000.00. However, the Seller received another verified offer to purchase the subject premises for $400,000.00. The City and Seller negotiated for a proposed purchase and sale price of $375,000.00 based on the City's need for this parcel for future public purposes.

FINANCIAL IMPACT:
$375,000 purchase price, plus related transactional costs.

ATTORNEY REVIEW/RECOMMENDATION:
Reviewed and approved by Blalock Walters

SUGGESTED MOTION:
Motion to approve the Agreement of Purchase & Sale for for 308 13th Street West, and authorize the Mayor to execute the same, and further authorize the Mayor to execute the closing documents necessary to effectuate the sale upon the completion of due diligence.

ATTACHMENTS:
Agreement of Purchase and Sale

AGREEMENT OF PURCHASE AND SALE

THIS AGREEMENT OF PURCHASE AND SALE (the "**Agreement**") is by and between **SUSAN W. WILCOX** (hereinafter called the "**Seller**") and **CITY OF BRADENTON, a Florida municipal corporation** (hereinafter called the "**Purchaser**").

ARTICLE 1
Definitions

Section 1.1 As used in this Agreement, unless the context otherwise requires or it is otherwise herein expressly provided, the following terms, when used with initial capital letters, shall have the following meanings:

CLOSING: The consummation of the transaction contemplated by this Agreement.

CLOSING DATE: Thirty (30) days after the expiration of the Inspection Period.

ESCROW AGENT: Blalock Walters, PA, 802 11th Street West, Bradenton, FL 34205.

PROPERTY: The real property located at 308 13TH Street West, Bradenton, Florida, as described on **Exhibit "A"** attached hereto, including all improvements owned by Seller and located thereon, and Seller's interest, if any, in and to (a), lands underlying any adjacent streets or roads, easements, privileges, rights-of-way, riparian and other water rights, impact fee credits, and other appurtenances pertaining to or accruing to the benefit of the Property and (b) all licenses, permits, authorizations, and approvals pertaining to the ownership and/or operation of the Property, if any.

TITLE COMPANY: Blalock Walters, PA, as agent for Attorney's Title Insurance Fund, Inc. or Chicago Title Insurance Fund, Inc.

Section 1.2 For purposes of determining the time for performance of various obligations under this Agreement, the effective date of this Agreement (the "**Effective Date**") shall be the date when the last one of Seller and Purchaser has executed this Agreement.

ARTICLE 2
Sale and Purchase

Section 2.1 Subject to the terms and provisions hereof, the Seller agrees to sell to the Purchaser, and the Purchaser agrees to purchase from the Seller the Property.

ARTICLE 3
Purchase Price

Section 3.1. The purchase price shall be THREE HUNDRED SEVENTY FIVE THOUSAND AND 00/100 DOLLARS ($375,000.00) net to Seller, price to be adjusted where Seller receives $375,000.00 at Closing (the "Purchase Price"), payable in the following manner:

A. Earnest Money Deposit. Within three (3) business days following the Effective Date of this Agreement, Purchaser shall deliver to Escrow Agent to be held in a non-interest bearing escrow account the sum of TEN THOUSAND AND 00/00 DOLLARS ($10,000.00) (the "Deposit"). The Deposit shall be refundable during the Inspection Period in the event the Property is not suitable to Purchaser in its sole and absolute discretion. Purchaser shall receive a credit on the total amount of the Deposit toward the Purchase Price on the Closing Date (as hereinafter defined).

B. Balance of Purchase Price. On the Closing Date (as hereinafter defined) Purchaser shall pay the full balance of the Purchase Price, in accordance with this Agreement, to Seller in bank wire, or other collected funds, less the Deposit. Seller shall be paid $375,000.00 net proceeds

at Closing. Purchase Price to be adjusted to result in a final payment at Closing to $375,000.00 to Seller.

ARTICLE 4
Title and Survey Matters

Section 4.1 Title

A. Condition of Title. At Closing, Seller shall convey the Property by good and marketable title to Purchaser by means of a Special Warranty Deed in recordable form conveying to Purchaser good and marketable title in fee simple to the Property, free and clear of all claims, liabilities, obligations, security interest, liens, judgments and encumbrances, except those Permitted Exceptions set forth in Paragraph 4.1(B).

B. Evidence of Title. Within the Inspection Period, Purchaser shall obtain an owner's title insurance commitment (the **"Commitment"**) from Attorney's Title Insurance Fund, Inc. or Chicago Title Insurance Fund, Inc. (the "Title Insurer") agreeing to issue ALTA Marketability Policy (the "Policy") insuring Purchaser's title to the Property effective as of the Closing.

The evidence of title shall show Seller to be vested with good and marketable title to the Property, subject only to the following (the "**Permitted Exceptions**"): (i) ad valorem real estate taxes for the current year and subsequent years; (ii) applicable zoning ordinances and regulations; (iii) encroachments, overlaps, boundary line disputes, and any other matters which would be disclosed by an accurate survey and inspection of the premises, unless a current survey as described in 4.2 is provided to the Title Company, and (v) those matters described on **Exhibit "B** attached hereto.

Purchaser shall have fifteen (15) days from receipt of the Commitment to examine same (the **"Title Examination Period"**). If Purchaser finds title to be unmarketable, Purchaser shall, within the Title Examination Period, notify Seller in writing, specifying the defect(s) **("Purchaser's Objection Notice")**. Any exceptions to title not objected to by Purchaser in Purchaser's Objection Notice shall become Permitted Exceptions. Seller shall, within ten (10) days of its receipt of Purchaser's Objection Notice, advise Purchaser in writing (**"Seller's Response**") which objections, if any, it shall cure or cause to be cured prior to the Closing. Seller has no obligation to cure any title objections, except that Seller shall in all events be obligated to cause to be released on or before Closing (i) all liens filed against the Property, (ii) all items Seller agrees to cure in the Seller's Response, and (iii) any exceptions to title created by Seller and not reflected on the Commitment. If, in Seller's Response, Seller declines to cure all items to which Purchaser objected in Purchaser's Objection Notice, Purchaser shall be entitled to: (i) terminate this Agreement; provided, however, Purchaser must exercise such right no later than ten (10) days after Purchaser's receipt of "Seller's Response," whereupon the Deposit, shall be paid by the Escrow Agent to Purchaser or (ii) Purchaser may proceed with the transaction as provided herein without reduction of the Purchase Price and such title matters shall be deemed Permitted Exceptions.

Section 4.2 Survey. Within the Inspection Period, Purchaser, at Purchaser's expense, may obtain a current and accurate survey (the "Survey") of the Property, certified to the Title Company and in a form acceptable to the Title Company as a basis for deleting the standard title insurance exceptions for survey matters. If the Survey shows any encroachments on setback lines or easements or that the Property violates any restrictions or covenants or any matter (other than a Permitted Exception) that would appear as a specific title insurance exception, Purchaser shall, within the Inspection Period, give written notice of such defect to Seller, in which event, such defect shall be governed in the same manner and time as objections to title are dealt with in Paragraph 4.1(B), and the parties shall have the same rights, privileges and obligations as if the defect was an objection to title as specified in Paragraph 4.1(B) of this Agreement.

ARTICLE 5
Seller Deliveries and Representations

Section 5.1 Within five (5) business days after the Effective Date hereof, Seller shall furnish to Purchaser the following items in Seller's reasonable possession and control:

A. Copies of any environmental reports, surveys, title work, land use approvals or permits, appraisals and studies.

B. Copies of all applicable permits and licenses.

C. Copies of all service contracts ("Service Agreements"), if any. Purchaser shall notify Seller thirty (30) days prior to the Closing Date as to whether it wants Seller to terminate any of the Service Agreements.

D. Any other documentation reasonably requested by Purchaser, Title Company or Purchaser's lender to evaluate the Property, to the extent in Seller's possession.

Section 5.2 Seller represents to Purchaser, to the best of Seller's knowledge, as of the date hereof, and as of the Closing Date, that:

A. The individual executing this Agreement on behalf of Seller has the right, power and authority to execute this Agreement on behalf of Seller, and Seller has the right, power and authority to convey the Property in accordance with the terms of this Agreement.

B. Seller has received no notice of any special assessments against the Property, except as reflected on the tax bill.

C. There is no litigation pending, or to Seller's knowledge threatened, with respect to the Property.

D. Seller has received no notice of any condemnation action against the Property.

E. No permit, approval, authorization of, or designation, declaration or filing with, any governmental authority or any other person or entity on the part of Seller is required in connection with the execution or delivery by Seller of this Agreement.

F. There are no unrecorded leases or contracts not disclosed to Purchaser, or any other agreements which will affect the Property and/or Purchaser from and after the Closing, including, but not limited to any maintenance, repair, service, pest control or supply, management, employment, equipment, equipment rental agreements, or any other agreements used in connection with the Property.

G. At the time of execution of this Agreement no one has an option to purchase the Property or a right of first refusal or first offer with respect to a sale of the Property.

H. Seller may not enter into amend or modify any contract or lease with respect to the Property but may terminate any lease.

I. There are no unpaid, but presently payable taxes or any assessments affecting the Property imposed by any governmental authority and Seller has remitted to the State of Florida or any other governmental authorities the amount of any taxes dues in connection with the Property.

J. There is no suit, action or litigation, administrative hearing, arbitration, labor controversy or negotiation, or other proceeding or governmental inquiry or investigation known to Seller, affecting Seller or Seller's properties (including, but not limited to, environmental or land use proceedings), pending, or to the best of Seller's knowledge, threatened against Seller which, if resolved adversely, would have an adverse effect on the Property or on the ability of Seller to consummate the transactions contemplated hereby. There are no known judgments, consent decrees or injunctions against, affecting or binding upon Seller. Seller has received no notice of any violations of any governmental law, ordinance, requirement, order or regulation the violation of which would have a material adverse effect on the Property or on the ability of Seller to consummate the transactions contemplated hereby, and to best of Seller's knowledge after due inquiry Seller has received no notice of any claimed default with respect to any of the foregoing.

K. Seller is not a foreign person within the meaning of Section 1445(a) of the Internal Revenue Code of 1986, as amended (the **"Code"**).

L. Seller represents and warrants that, to the best of Seller's knowledge, no hazardous or regulated substances as defined by the Comprehensive Environmental Response, Compensation and Liability Act of 1980 ("CERCLA"), 42 USC 9601(14), pollutants or contaminants as defined by CERCLA, 42 USC 96D4(A) (2), or hazardous wastes as defined by the Resource Conservation and Recovery Act ("RCRA"), 42 USC 6903 (5), or other hazardous or toxic substances or wastes described in any other applicable federal or state laws and regulations including, but not limited to, asbestos, PCBs, and urea formaldehyde (all of the foregoing being collectively referred to as "Hazardous Materials"), have been generated, released, stored, or deposited over, beneath, or on the Property or on or in any structures on the Property.

The provisions of this paragraph and any other representation, warranty, or covenant set forth in this Agreement shall survive the Closing for one year after the Closing Date. Said representations, warranties and covenants shall be deemed to be restated and affirmed by Seller as of the Closing Date without the necessity of Seller's execution of any documents with regard thereto. Purchaser shall have no duty to investigate or inquire regarding the accuracy or veracity of any representation, warranty, or covenant of Seller and it shall be deemed reasonable for Purchaser to fully rely upon same.

Section 5.3 From the Effective Date until the Closing Date or earlier termination of this Agreement, Seller shall:

A. Operate and maintain the Property diligently and in the ordinary course of its business, ordinary wear and tear excepted.

B. Shall not enter into any new leases or agreements but may terminate such.

C. Not sell, assign, or convey any right, title, or interest whatsoever in or to the Property or create or permit to exist any lien, encumbrance, or charge thereon without promptly discharging the same.

ARTICLE 6
Inspection Period

Section 6.1 The Seller agrees that from the Effective Date hereof until Closing, the Purchaser, personally or through its authorized agents or representatives, shall be entitled, after scheduling such inspections with reasonable notice to Seller, to enter upon the Property to conduct such reasonable physical, economic and environmental inspections, independent appraisals, and other tests, examinations and studies of the Property as Purchaser desires, including, but not limited to, inspections of the Property at reasonable times so long as such activities do not damage the Property. Purchaser shall indemnify and hold Seller harmless from and against any and all claims, demands, injuries, damages, costs, expenses,

liens (including reasonable attorney's fees, including but not limited to, attorney's fees incurred in enforcement in this indemnity) or liability incurred by or asserted against Seller as a result of, or in any way arising out of, any of those visits or inspections unless caused by the willful misconduct of Seller. This indemnity shall survive any termination of this Agreement or Closing. **ACCEPTANCE OF THE INSPECTION IS SUBJECT TO AUTHORIZATION AND APPROVAL BY BRADENTON CITY COUNCIL AND/OR BY AND THROUGH THE RECOMMENDATION OF THEIR DESIGNEE, THE CITY ADMINISTRATOR.** The Purchaser shall have until THIRTY (30) days after the Effective Date (the "**Inspection Period**"), within which to make all inspections or investigations of the Property desired by the Purchaser. If, at any time prior to the expiration of the Inspection Period, the Purchaser is not satisfied with the result of the inspections, in its sole discretion, the Purchaser shall have the right to terminate this Agreement by written notice to the Seller by 5:00 PM EST on the last day of the Inspection Period, whereupon the Deposit together with all interest accrued thereon shall be paid by the Escrow Agent to Purchaser, and Seller and Purchaser shall have no further rights or duties to each other under this Agreement, except as otherwise provided in the Agreement. A failure by Purchaser to timely terminate this Agreement within the Inspection Period shall constitute Purchaser's acceptance of the physical condition of the Property in all respects. In connection therewith, Purchaser or its agents shall have the right to do all environmental, surveying, engineering, soil borings and other tests with respect to the Property, and to meet with and make applications for approvals to any governmental or quasi-governmental officials or agents for the potential development of the Property (including, but not limited to, the County or Municipality in which the Property is located, Army Corps of Engineers, or the Water Management District). Seller shall, upon Purchaser's request, execute any additional agent authorization documentation specifically required by any such governmental or quasi-governmental agencies in order to effectuate the foregoing provision, provided that Seller shall not be required to incur any cost or expense in such application or approval process. Property is being sold "as is" with no warranty or representations and Buyer is relying on its own investigations.

Section 6.2 Seller and Purchaser acknowledge and agree that this Agreement shall be subject to final approval by the Bradenton City Council prior to the expiration of the Inspection Period as set forth herein. Otherwise, it shall be terminated with no further force and effect and the Deposit shall be returned to the Purchaser, provided that Purchaser timely provides Seller with written notice of termination on or before the expiration of the Inspection Period provided for in paragraph 6.1 above.

ARTICLE 7
Damage or Destruction Prior to Closing; Condemnation

Section 7.1 In the event the improvements on the Property should be damaged by any casualty after the Effective Date prior to Closing, and if the cost of repairing such damage, as estimated by a qualified contractor retained by the Purchaser, at Purchaser's expense, is:

A. less than ONE HUNDRED THOUSAND AND NO/100 DOLLARS ($100,000.00), then the Purchaser shall either elect to have (1) Seller repair the damage, or (2) Seller assign to the Purchaser the insurance proceeds plus an amount equal to the deductibles and the sale shall be closed provided however; in the event Purchaser elects to have Seller repair the damage and Seller is unable to complete the repairs by closing Purchaser may delay the closing until the repairs are completed by Seller or Seller may assign the insurance proceeds to Purchaser and Purchaser shall complete the repairs; or if said cost is

B. more than ONE HUNDRED THOUSAND AND NO/100 DOLLARS ($100,000.00), then the Purchaser may elect to terminate this Agreement; and if the Purchaser does not elect to terminate this Agreement, the Seller shall assign to Purchaser, at Closing, all insurance proceeds payable for such damage, and Purchaser shall receive a credit against the Purchase Price in the amount of any deductible required by Seller's insurance policies, and the sale shall be closed without the Seller's repairing such damage; provided however, Seller shall be obligated to make such emergency repairs as are necessary to prevent further damage to the Property or injury to any person thereon, and Seller may use insurance proceeds for this limited purpose.

Notwithstanding the foregoing, Seller shall be entitled to retain all insurance proceeds for business interruption due to Seller on or before the Closing Date.

Section 7.2 In the event of a taking by condemnation or similar proceedings or actions of all of the Property, or any portion of the Property without which portion the use and value of the remaining portion of the Property will be materially and adversely affected, Purchaser shall have the option to terminate this Agreement upon written notice to Seller within ten (10) business days after notice thereof. If Purchaser does not exercise its option under the immediately preceding sentence of this Section to terminate this Agreement, then the Agreement shall remain in full force and effect and Seller shall assign or pay to Purchaser at Closing, Seller's entire interest in and to any and all condemnation awards or proceeds from any such proceedings or actions in lieu thereof.

ARTICLE 8
Closing

Section 8.1 The Closing hereunder shall take place at the offices of the Title Company, on the Closing Date.

Section 8.2 At the Closing, Seller shall deliver or cause to be delivered to Purchaser each of the following items:

A. A Special Warranty Deed.

B. Such evidence or documents as may be reasonably required by the Title Company evidencing the status and capacity of Seller and the authority of the person or persons who are executing the various documents on behalf of the Seller in connection with the sale of the Property.

C. Non-Foreign Affidavit. An affidavit required by Section 1445 of the Internal Revenue Code of 1986, as amended (the **"Code"**), and the Regulations pursuant thereto, and acceptable to Purchaser.

D. No Lien Affidavit An appropriate and duly executed Seller's affidavit or other acceptable evidence attesting to the absence of liens, lien rights (except any liens or lien rights resulting from Purchaser's inspection of the Property), rights of parties in possession and other encumbrances arising under Seller (other than the permitted exceptions acceptable to Purchaser) naming both Purchaser and the title insurance company as benefited parties, so as to enable the title insurance company insuring Purchaser to delete the standard exceptions related to liens, parties in possession, and otherwise insure any "gap" period occurring between the Closing Date and the recordation of the closing documents.

E. Assignment. A duly executed Assignment assigning to Purchaser (i) any and all governmental approvals, permits and development rights; and (ii) any and all other right title and interest of Seller in any and all tangible and intangible rights with respect to the operation and use of the Property.

F. Closing Statement. A duly executed Closing Statement that complies with the provisions of this Agreement.

G. Certifications. Such certifications, affidavits, and materials as shall be required in connection with the issuance to Purchaser of the Policy.

H. Miscellaneous. Any other documents, instruments or agreements called for hereunder which have not previously been delivered or which are reasonably necessary to close the transaction as contemplated by this Agreement and any documents required by the title

insurance company insuring the Policy in favor of Purchaser.

I. No Parties in Possession Affidavit. Proof from Seller that the Property is vacant from all tenants or parties in possession, except for Seller.

Section 8.3 At the Closing, Purchaser shall deliver to Seller the following:

A. The Purchase Price.

B. Such evidence or documents as may reasonably be required by the Seller or the Title Company evidencing the status and capacity of Purchaser and the authority of the person or persons who are executing the various documents on behalf of the Purchaser in connection with the purchase of the Property.

C. Closing Statement. A duly executed Closing Statement that complies with the provisions of this Agreement.

Section 8.4 Closing Costs

A. Seller shall pay the following Closing Costs:

1. Seller's attorneys' fees; and

2. Any and all real estate commissions due from the Seller's real estate agent or broker (see Article 9)

B. Purchaser shall pay the following Closing Costs:

1. Purchaser's attorneys' fees;

2. All costs of Purchaser's inspections;

3. The documentary stamp tax on the deed;

4. Cost of recording of the deed and;

5. The cost of obtaining and issuing the Commitment and Policy.

Section 8.5 This Agreement, and the rights, and obligations hereunder, may be freely assigned by Purchaser upon written notice to Seller.

Section 8.6 Leaseback. At Closing, the parties shall execute a lease agreement providing Seller to lease back the Property up to 6 months after the Closing Date for a total consideration of $1, with Seller maintaining reasonable amounts of liability insurance; pay all utilities and upon end of tenancy ("Lease"). The parties shall reasonably agree on the Lease form during the Inspection Period. The Lease term may be extended by up to 6 months by written agreement from both parties. Seller may leave any personal property Seller does not want to keep at the time of possession is turned over to the Purchaser.

Section 8.7 Public Disclosure Affidavit. Pursuant to the provisions of Section 286.23, Florida Statutes, and not less than 10 days prior to the Closing Date, Seller shall disclose in writing to Purchaser, under oath and subject to the penalties of perjury, the name and address of every person having a beneficial interest in the Property.

Section 8.8 Prorations. The following shall be apportioned between Seller and Purchaser as of 11:59 p.m. on the day immediately preceding the Closing Date (the "**Apportionment Date**"), such that Purchaser shall be treated as the owner of the Property for purposes of prorations of income and expenses, on and after the Closing Date:

A. Utilities. Charges for utilities serving the Property shall be determined as of the day preceding the Closing Date, and Seller shall pay the amount of the utility charges to such date to the utility companies involved or to Purchaser in the event Purchaser is responsible for the payment of such utility charges. All utility deposits of Seller shall belong to Seller. If the charges for utilities cannot conclusively be determined as of the date of Closing, then the same shall be adjusted at Closing based upon the most recently issued bills thus far, and shall be re-adjusted when and if final bills are issued.

B. Miscellaneous. All other operating expenses with respect to the Property to the extent such matters are customarily apportioned in connection with real estate closings of commercial properties located in Manatee County, Florida.

C. Reproration. To the extent that any adjustment set forth herein is based upon estimated bills, is not otherwise capable of being definitively determined (based on lack of relevant information or otherwise) and/or was subject to error, the amount of such adjustment will be readjusted by the parties upon final determination of such amount, but in all events by that date which is one (1) year after the Closing Date.

D. Survival. The provisions of this Section 8.8 shall expressly survive the Closing.

Section 8.9 Taxes. At Closing, Seller shall, in accordance with the statutory requirements set forth in Section 196.295, Florida Statutes, deposit into escrow with the County Tax Collector an amount equal to the current year's real, personal and intangible property taxes, if any, for the Property, prorated to the date of Closing, same being the date upon which transfer of title shall occur. This amount shall he based upon the current assessment and millage rate on the Property. If the actual taxes vary from the figures used to close this transaction, Seller shall pay appropriate adjustments upon demand, which demand shall be made no later than December 31, 2024. It is acknowledged by the parties that Seller shall be responsible for taxes that may be assessed on the property for the tax year of 2024 only through the date of Closing.

ARTICLE 9
Real Estate Commission

Section 9.1 Purchaser and Seller each represent and warrant to the other that there are no real estate brokers, salesman or finders involved in this transaction. Seller and Purchaser agree to indemnify, protect, defend and hold each other harmless against and with respect to any obligation, liability or claim of liability based in any way on any contracts, arrangements or understandings claimed to have been made or actually made by Seller or Purchaser, as the case may be, with any third party as to the sale of the Property. The provisions of this paragraph shall survive the Closing, or if the Closing does not occur, the termination of this Agreement.

ARTICLE 10
Remedies of Default Prior to Closing

Section 10.1 In the event of a default by Seller prior to Closing, then, Purchaser may elect, at its option, as its sole and exclusive remedy, (a) to terminate this Agreement and the Deposit shall be returned to Purchaser by the Escrow Agent, or (b) to enforce specific performance hereunder against Seller.

Section 10.2 In the event of a default by Purchaser prior to Closing, then Seller may elect, at its option, as its sole and exclusive remedy to terminate this Agreement and the Deposit shall be released to the Seller by the Escrow Agent.

ARTICLE 11
Miscellaneous

Section 11.1 All notices, demand, or other communications of any type (herein collectively referred to as "**Notices**") given by the Seller to the Purchaser or by the Purchaser to the Seller, whether required by this Agreement or in any way related to the transaction contracted for herein, shall be void and of no effect unless given in accordance with the provisions of this Article 11. All notices shall be in writing and delivered to the person to whom the notice is directed, either person, by facsimile, electronic mail, by nationally recognized overnight courier, or by United States Mail, as registered or certified item, return receipt requested. Delivery to a party's attorney or one of the real estate agents shall constitute effective notice under this Agreement. Notices delivered by mail shall be effective when deposited in a post office other depository under the care of custody of the United States Postal Service, enclosed in wrapper with proper postage affixed, addressed, as follows:

Purchaser: Rob Perry
City Administrator
101 12th Street West
Bradenton, FL 34205

with a copy to: William Robinson, Jr., Esq.
Blalock Walters, P.A.
802 11th Street West
Bradenton, Florida 34205

and addressed, if to the Seller, as follows:

3202 Riverview Blvd.
Bradenton, FL 34205

with a copy to Escrow Agent:

Blalock Walters, P.A.
Attn: William Robinson, Jr., Esq.
802 11th Street West
Bradenton, Florida 34205

Section 11.2 This Agreement shall be construed and interpreted in accordance with the laws of the State of Florida and the obligations of the parties hereto are and shall be performed in the county wherein the Property is located. Where required for proper interpretation, words in singular shall include the plural, the masculine gender shall include the neuter and the feminine, and vice versa. The terms "heirs, executors, administrators and assigns" shall include "successors, legal representatives and assigns."

Section 11.3 This Agreement shall be binding upon and inure to the benefit of the parties hereto and their respective legal representatives, successors and permitted assigns. This Agreement may not be modified or amended, except by an agreement in writing signed by the Seller and the Purchaser. The parties may waive any of the conditions contained herein or any of the obligations of the other party hereunder, but any such waiver shall be effective only if writing and signed by the party waiving such conditions or obligations.

Section 11.4 In the event it becomes necessary for either party hereto to file a suit to enforce this Agreement or any provisions contained herein, the party prevailing in such action shall be entitled to

recover, in addition to all other remedies or damages, reasonable attorneys' and paralegal fees and court costs, including appellate costs, incurred in such suit.

Section 11.5 The descriptive heading of the several Articles, Sections and Paragraphs contained in this Agreement are inserted for convenience only and shall not control or affect the meaning or construction of any of the provisions hereof.

Section 11.6 This Agreement, including the Exhibits, constitutes the entire agreement among the parties pertaining to the subject matter hereof and supersedes all prior and contemporaneous agreement and understanding of the parties in connection therewith. No representation, warranty, covenant, agreement or condition not expressed in this Agreement shall be binding upon the parties hereto or shall affect or be effective to interpret, change or restrict the provisions of this Agreement.

Section 11.7 Multiple originals of this Agreement have been executed by the parties hereto. Each such executed original shall have the full force and effect of an original executed instrument. This Agreement may be executed in multiple counterparts, all of which when taken together shall constitute one and the same agreement. It shall not be necessary that the signature of all parties appear on the same counterpart, so long as each party signs at least one counterpart. Transmission of the signatures of the parties hereto shall constitute valid and binding execution and shall be deemed original signatures.

Section 11.8 Unless otherwise specified, in computing any period of time described in this Agreement, the day of the act or event after which the designated period of time begins to run is not to be included, and the last day of the period so computed is to be included, unless such last day is a Saturday, Sunday or legal holiday under the laws of the State of Florida, in which event the period shall run until the end of the next day which is neither a Saturday, Sunday or legal holiday. All time periods expressed as days will be computed in calendar days. The final day of any such period shall be deemed to end at 5:00 PM EST. Time is of the essence of this Agreement with regard to the Closing Date and delivery of the Deposit. Notwithstanding the foregoing, in the event a hurricane warning has been issued such that the Property is located in an area where the projected land fall is within the NOAA cone of probability within two (2) days of the Closing, the parties agree to delay the Closing for up to seven (7) days at the request of either party.

Section 11.9 If any term or provision of this Agreement which would not deprive the parties of the benefit of the bargain shall be held to be invalid, illegal, unenforceable or inoperative as a matter of law, the remaining terms and provision of this Agreement shall not be affected thereby, but each such remaining term and provision shall be valid and shall remain in full force and effect.

Section 11.10 Each party hereto acknowledges that each of them has had the benefit of legal counsel of its own choice and has been afforded an opportunity to review this Agreement with its legal counsel and that this Agreement has been jointly drafted and shall be construed as having been jointly drafted by each party hereto. Accordingly, the rule of construction to the affect that ambiguities are to be resolved against the drafting party shall not be employed in the interpretation of this Agreement of any amendments or exhibits hereto.

Section 11.11 Waiver of Jury Trial. **EACH PARTY HEREBY WAIVES, IRREVOCABLY AND UNCONDITIONALLY, TRIAL BY JURY IN ANY ACTION BROUGHT ON, UNDER OR BY VIRTUE OF OR RELATING IN ANY WAY TO THIS AGREEMENT OR ANY OF THE DOCUMENTS EXECUTED IN CONNECTION WITH THIS AGREEMENT, THE PREMISES, OR ANY CLAIMS, DEFENSES, RIGHTS OF SET-OFF OR OTHER ACTIONS PERTAINING HERETO OR TO ANY OF THE FOREGOING**

Section 11.12. Obligations contained in this Agreement which by their terms, are to be performed after the termination of the Closing, shall survive such termination or Closing.

Section 11.13 RADON NOTICE. RADON IS A NATURALLY OCCURRING RADIOACTIVE GAS THAT WHEN IT HAS ACCUMULATED IN A BUILDING IN SUFFICIENT QUANTITIES, MAY PRESENT HEALTH RISKS TO PERSONS WHO ARE EXPOSED TO IT OVER TIME. LEVELS OF RADON THAT

EXCEED FEDERAL AND STATE GUIDELINES HAVE BEEN FOUND IN BUILDINGS IN FLORIDA. ADDITIONAL INFORMATION REGARDING RADON AND RADON TESTING MAY BE OBTAINED FROM YOUR COUNTY HEALTH DEPARTMENT.

Section 11.14 Escrow Provisions. The Deposit delivered to Escrow Agent pursuant to this Agreement shall be: (i) held by it in trust in a non-interest-bearing account in a federally insured banking institution, and (ii) disbursed, subject to clearance thereof, in accordance with the terms and provisions of this Agreement. Failure of clearance of funds shall not excuse Purchaser's performance hereunder. If there is any dispute as to whether Escrow Agent is obligated to deliver the Deposit or to whom the Deposit is to be delivered, Escrow Agent shall not be obligated to make any delivery, but, in such event, may hold the Deposit until the receipt by the Escrow Agent of an authorization, in writing, signed by the Seller and Purchaser, directing the disposition of the Deposit, such writing also acknowledging to Escrow Agent that there are no other parties having an interest in such dispute. In the absence of such authorization, Escrow Agent may hold the Deposit until the final determination of the rights of the parties in an appropriate proceeding. If such written authorization is not given or proceeding for such determination not begun and diligently continued, Escrow Agent may being an appropriate action or proceeding for leave to place the Deposit with an appropriate court with jurisdiction. Escrow Agent shall not be responsible for any acts or omissions unless negligently or will fully done, and upon making delivery of the Deposit in accordance with the terms of this Agreement, Escrow Agent shall have no further liability. In the event Escrow Agent places the Deposit in the registry of the Circuit Court and files an action of interpleader naming the parties hereto, Escrow Agent shall be released and relieved from any and all further obligation and liability hereunder or in connection herewith. Seller acknowledges that Escrow Agent is legal counsel to Purchaser and agrees that, in the event of any dispute between Seller and Purchaser, Escrow Agent may continue to represent Purchaser in connection with the dispute, notwithstanding Escrow Agent's role under this Agreement.

Section 11.15 Termination. This Agreement shall terminate and be null and void if not executed by Seller and returned to Purchaser on or before 5:00 p.m. EST on 30th day of May, 2026.

IN WITNESS WHEREOF, the parties hereto have caused this Agreement to be executed by its duly authorized representatives:

PURCHASER:

CITY OF BRADENTON, a municipal corporation

By:_____

Its:_____

Date:_____

SELLER:

Susan W. Wilcox

SUSAN W. WILCOX

ESCROW AGENT:

The undersigned Escrow Agent hereby acknowledges and consents to the terms of the "Escrow Agent" paragraph of this Agreement. The Escrow Agent agrees that the Escrow Agent shall hold in escrow as an escrow agent the Deposit as the earnest money deposit under this Agreement and agrees to hold the same in a non-interest bearing account and in accordance with the terms of this Agreement.

Blalock Walters, PA

By: _____

Print Name: _____

Its: _____

EXHIBIT A
LEGAL DESCRIPTION OF THE PROPERTY

LOT 1 LESS WLY 95.5 FT CORNWELL ADD PI#33226.0000/2

EXHIBIT B

PERMITTED EXCEPTIONS

1. The lien of all taxes for the year 2026 and thereafter, which are not yet due and payable.

AGENDA ITEM NO. 8.b

Item Cover Page

CITY COUNCIL MEETING AGENDA ITEM REPORT

DATE: May 27, 2026

SUBMITTED BY: Rob Perry, City Administration

ITEM TYPE: Miscellaneous

AGENDA SECTION: NEW BUSINESS BY DEPARTMENT HEADS, CITY ATTORNEY AND COUNCIL

SUBJECT: Change Order Number 13 Revision 2 with AECOM for the Bradenton Police Department Headquarters

SUGGESTED ACTION: TBD

Is this item Quasi-Judicial?
No

Does this item require a public hearing?
No

EXPLANATION:
Changes to the services:
AECOM's existing contract with the City of Bradenton was amended in Change Order No. 7 to extend the Construction Administration Phase through January 23, 2026 anticipated to be aligned to substantial completion.

This change order is to update the agreement between the City and AECOM to extend AECOM's Contract Administration Phase services through December 31, 2026. This represents an additional 282 days of construction phase services for the project. AECOM will perform services after December 31, 2026 as an additional service.

This extended contract administration period will consist of the following:

- Virtual participation of one OAC meeting every month (up to nine OAC meetings in the extended contract administration period).
- Responses to RFIs from March 24, 2026 through December 1, 2026.
- Limited submittal review - AECOM anticipates most submittals have been reviewed during the base contract administration phase services. Up to 5 submittals (or resubmittals) will be reviewed during the extended contract

administration period.

Site visits before substantial completion have been excluded from the scope of work for this extension. AECOM will continue to be responsible for the Task 16.9 Substantial Completion Inspections included in the base contract. AECOM will perform the Final Completion Inspection consisting of one inspection of the completed work to assess satisfactory completion of punch list items. AECOM assumes that the CMAR will be responsible for recording and issuance of the punch list. If the City requests site visits in addition to the substantial and final completion visits, AECOM will perform them as an additional service on a Time and Materials basis based on the rates included in Section 6 - Other Changes below. Upon the City request, AECOM will provide an estimated cost to the City for the site visit based on the issues and disciplines involved prior to the site visit for City concurrence.

Change in project schedule:
Update to reflect the duration in the construction schedule as included in the city approved Change Order 7 on March 24, 2026, an extension of Construction Phase Services support through December 31, 2026.

FINANCIAL IMPACT:
Expense of $47,000.00. The total authorized compensation inclusive of the change order is $3,146,596.37.

ATTORNEY REVIEW/RECOMMENDATION:
N/A

SUGGESTED MOTION:
TBD

ATTACHMENTS:
Change Order Number 13 Revision 2 with AECOM

AECOM Imagine it Delivered

AECOM Project Name: City of Bradenton Police Headquarters
AECOM Project No.: 60697269
Change Order No.: 013 Rev 2
City of Bradenton
4/22/26
Revised 5/1//26

CHANGE ORDER

This Change Order No. 13 Rev 2, with an effective date of March 23, 2026 is issued under the Consulting Services Agreement ("Agreement") dated November 11, 2022 by and between The City of Bradenton ("Client") and AECOM Technical Services, Inc. ("AECOM"); each also referred to individually as a "Party" and collectively as "Parties". This Change Order modifies the Agreement as follows:

1. **Changes to the Services**:

AECOM's existing contract with the City of Bradenton was amended in Change Order No. 7 to extend the Construction Administration Phase through January 23, 2026 anticipated to be aligned to substantial completion.

This change order is to update the agreement between the City and AECOM to extend AECOM's Contract Administration Phase services through December 31, 2026. This represents an additional 282 days of construction phase services for the project. AECOM will perform services after December 31, 2026 as an additional service.

This extended contract administration period will consist of the following:

- Virtual participation of one OAC meeting every month (up to nine OAC meetings in the extended contract administration period).
- Responses to RFIs from March 24, 2026 through December 1, 2026.
- Limited submittal review - AECOM anticipates most submittals have been reviewed during the base contract administration phase services. Up to 5 submittals (or resubmittals) will be reviewed during the extended contract administration period

Site visits before substantial completion have been excluded from the scope of work for this extension. AECOM will continue to be responsible for the Task 16.9 Substantial Completion Inspections included in the base contract. AECOM will perform the Final Completion Inspection consisting of one inspection of the completed work to assess satisfactory completion of punch list items. AECOM assumes that the CMAR will be responsible for recording and issuance of the punch list. If the City requests site visits in addition to the substantial and final completion visits, AECOM will perform them as an additional service on a Time and Materials basis based on the rates included in Section 6 – Other Changes below. Upon the City request, AECOM will provide an estimated cost to the City for the site visit based on the issues and disciplines involved prior to the site visit for City concurrence.

2. **Change to Deliverables**:

None

3. **Change in Project Schedule** (attach schedule if appropriate):

Update to reflect the duration in the construction schedule as included in the city approved Change Order 7 on March 24, 2026, an extension of Construction Phase Services support through December 31, 2026.

4. **Change in AECOM's Compensation**:

The Services set forth in this Change Order will be compensated on the following basis:

[ ] No change to Compensation

[ ] Time & Material (See **Exhibit B** for the Hourly Labor Rate Schedule)

[ ] Time and Materials with a Not- to-Exceed amount of ($). The Hourly Labor Rate Schedule is set forth in **EXHIBIT B** (if applicable). Reimbursable expenses are included in the overall Not to Exceed cap.

[X] Lump Sum [$ 47,000.00]

[ ] **Cost Plus Fixed Fee:** [Cost $ and Fee $]

Therefore, the total authorized Compensation, inclusive of this Change Order is $*3,146,596.37*

5. **Project Impact**:

None

6. **Other Changes** (including terms and conditions):

AECOM Time & Materials Rate Table to conduct additional services based off of classification at the Client's discretion:

Regional Director	$410.00
Principal	$310.00
Project Manager	$180.00
Senior BIM Lead	$225.00
BIM Manager	$150.00
Architect	$175.00
Architectural Designer	$140.00
Junior Architectural Designer	$90.00
Senior Interior Designer	$255.00
Interior Designer	$165.00
Junior Interior Designer	$90.00
Chief Engineering Lead	$300.00
Senior Engineer	$225.00
Project Engineer	$175.00
Junior Engineer	$130.00
CADD Technician	$85.00
Drafter	$70.00

7. All other terms and conditions of the Agreement remain unchanged.

8. Each Party represents that the person executing this Change Order has the necessary legal authority to do so on behalf of the respective Party.

AECOM Imagine it Delivered

AECOM Project Name: City of Bradenton Police Headquarters
AECOM Project No.: 60697269
Change Order No.: 013 Rev 2
City of Bradenton
4/22/26
Revised 5/1//26

AECOM Technical Services, Inc.

Signature

Randy Mejeur
Printed Name

Authorized Signatory/VP
Printed Title

5/11/26
Date

Address
7650 W Courtney Campbell Causeway,
Suite 700
Tampa, FL 33607

CLIENT:

The City of Bradenton

Signature

Gene Brown
Printed Name

Mayor
Printed Title

May 27, 2026
Date

Address
101 Old Main Street
Bradenton, FL 34205-7865

[End of the Change Order]

AGENDA ITEM NO. 8.c

Item Cover Page

CITY COUNCIL MEETING AGENDA ITEM REPORT

DATE: May 27, 2026

SUBMITTED BY: Rob Perry, City Administration

ITEM TYPE: Contract

AGENDA SECTION: NEW BUSINESS BY DEPARTMENT HEADS, CITY ATTORNEY AND COUNCIL

SUBJECT: Change Order Number 4 with NDC Construction for the Bradenton Police Department Headquarters

SUGGESTED ACTION: Approval

Is this item Quasi-Judicial?
No

Does this item require a public hearing?
No

EXPLANATION:
Change Order #4 to NDC Construction reduces the contract amount by $332,367.07 due to credits from direct material purchases such as roofing, fencing and wall metal panels. The materials purchased directly by the city and reflected in this change order amount to $549,198.99 and tax savings of $38,443.93. Also included in this change order is additional work authorized to NDC related to electrical work, evidence lockers and the removal of contaminated soil from the site.

FINANCIAL IMPACT:
The contract amount to NDC will be reduced by $332,367.07 for a new contract amount of $29,889,406.56.

ATTORNEY REVIEW/RECOMMENDATION:
Approved by Conflict Counsel, Erica Augello.

SUGGESTED MOTION:
Approval of the contract Change Order No. 4 to NDC Construction for the deductive amount of $332,367.07 for a new contract amount of $29,889,406.56

and authorize the Mayor to execute on behalf of the City.

ATTACHMENTS:
Change Order 4

AIA® Document G701® – 2017

Change Order

PROJECT: *(Name and address)*
Bradenton Police Department Headquarters
705 3rd Street West
Bradenton, FL 34205

CONTRACT INFORMATION:
Contract For: General Construction
Date: 07-24-2024

CHANGE ORDER INFORMATION:
Change Order Number: 004
Date: 04-07-2026

OWNER: *(Name and address)*
City of Bradenton
101 Old Main Street
Bradenton, FL 34205

ARCHITECT: *(Name and address)*
AECOM
7650 West Courtney Campbell
Causeway, Suite 700
Tampa, FL 33607

CONTRACTOR: *(Name and address)*
NDC Construction Company
1001 Third Avenue W, Suite 600
Bradenton, FL 34205

THE CONTRACT IS CHANGED AS FOLLOWS:
(Insert a detailed description of the change and, if applicable, attach or reference specific exhibits. Also include agreed upon adjustments attributable to executed Construction Change Directives.)
Provide equipment, materials and labor for scope changes due to revised drawings and owner request. See attached Change Request for more detail. Change Requests included are 12.3.2, 86, 89, 90, 90.1, 92, 93, 98, 101, 102, 103, 104 & 108.

The original Contract Sum was	$ 33,904,806.89
The net change by previously authorized Change Orders	$ (3,683,033.26)
The Contract Sum prior to this Change Order was	$ 30,221,773.63
The Contract Sum will be decreased by this Change Order in the amount of	$ 332,367.07
The new Contract Sum including this Change Order will be	$ 29,889,406.56

The Contract Time will be unchanged by Zero (0) days.
The new date of Substantial Completion will be

NOTE: This Change Order does not include adjustments to the Contract Sum or Guaranteed Maximum Price, or the Contract Time, that have been authorized by Construction Change Directive until the cost and time have been agreed upon by both the Owner and Contractor, in which case a Change Order is executed to supersede the Construction Change Directive.

NOT VALID UNTIL SIGNED BY THE ARCHITECT, CONTRACTOR AND OWNER.

Andrew Carr Digitally signed by Andrew Carr DN: CN=Andrew Carr, O=AECOM, OU=AECOM-18800122122C0008A01F, C=US Date: 2026.05.11 12:35:21-04'00'

Digitally signed by Adam Phillips

ARCHITECT *(Signature)*	CONTRACTOR *(Signature)*	OWNER *(Signature)*
Andrew Carr	BY: Adam Phillips, Vice President	
(Printed name, title, and license number if required)	*(Printed name and title)*	*(Printed name and title)*
5/11/26	04/09/2026	
Date	*Date*	*Date*

AIA Document G701 – 2017. Copyright © 1979, 1987, 2000 , 2001 and 2017. All rights reserved. "The American Institute of Architects," "American Institute of Architects," "AIA," the AIA Logo, and "AIA Contract Documents" are trademarks of The American Institute of Architects. This document was produced at 12:44:13 EDT on 04/08/2026 under Subscription No.20250159820 which expires on 10/30/2026, is not for resale, is licensed for one-time use only, and may only be used in accordance with the AIA Contract Documents® Terms of Service. To report copyright violations, e-mail docinfo@aiacontracts.com.
User Notes: (69d55e6f5f1b2d23ced154e1)

NDC CONSTRUCTION COMPANY

Bradenton Police Department HQ

OCO 4 Change Request Recap

CR		Amount
12.3.2	Contaminated Soil Removal - 3	$113,384.35
86	Low Voltage Changes	$0.00
89	Light Pole Bases	$7,781.90
90	Added Door Position Switches	$0.00
90.1	Added Door Position Switches - 2	$0.00
92	SPEC Building Materials DPO	($284,095.78)
93	Property & Evidence Lockers	$85,729.80
98	Trash Room Louver 4	$6,289.00
101	Metal Wall Panel DPO	($127,205.57)
102	Deco Fence DPO	($137,897.64)
103	Crash Wall Flashing (Contingency)	$0.00
104	Counter Top Property / Evidence (Contingency)	$0.00
108	Relocate Rooftop Unit DOAS-1	$3,646.87
	Total Change Order	($332,367.07)

NDC Construction Company
1001 3rd Ave West Suite 600
Bradenton, FL 34205
Ph : 941-747-1062

Change Request

To: Jean Totti
City of Bradenton
101 Old Main Street
Bradenton, FL 34205
Ph: (941)462-1999

Number: 12.3.2
Date: 2/13/2026
Job: 00587 Bradenton Police Dept HQ
Phone:
Date Sent: 2/13/2026

Description: Contaminated Soil - Soil Removal 3

We are pleased to offer the following specifications and pricing to make the following changes:

Provide labor, material, and equipment to haul contaminated soils off the site to a landfill that accpets non-hazardous contaminated waste per the HC247090 Soil Management Plan.

As of CR 12.3.12, approximately 647 cubic yards of additional contaminated soil have been hauled off the site.

It is not the intent of NDC to certify all costs related to this change. NDC reserves its right to time extension, impact costs, direct and indirect costs not listed herein that may be unforseen of the result of the cumulative effect this change may have. At this time, there is a potential time impact of 0 days.

Please return this Change Request at your earliest convenience as NDC is proceeding with this revision as per earlier direction.

The total direct cost to perform this work is ..... (Please refer to attached sheet for details.)	$113,384.35
Total:	**$113,384.35**

If you have any questions, please contact me at 941-747-1062.

Submitted by: Greg Hodge
NDC Construction

Approved by: _____
Date: 2/03/24

Change Order – Subcontractor

Project: Bradenton Police Dept. HQ

Subcontractor: B G Grading, LLC
3702 89th St. E.
Palmetto, FL 34221

Contractor: NDC Construction
1001 3rd Ave West, Suite 600
Bradenton, Florida 34205

Change Order Number: 34

Date: February 10th, 2026

Project Number: 00587

Contract Date: September 24,2024

Contract For: Sitework

The Contract is changed as follows: Attached are the invoices to date for trucking and removal of contaminated soil from jobsite.

SCOPE OF WORK: Contaminated Soil Disposal to Clean Earth per attached INVOICES.

• Clean Earth Disposal and Trucking		
o Invoice 73404415483 Service Date 10/27/2025 (2 tickets)		$ 6,186.34
o Invoice 73404439734 Service Date 11/07/2025 (1 ticket)		$ 3,299.89
o Invoice 73404448093 Service Date 1/21/2026 (6 ticket)		$ 21,413.46
o Invoice 73404448103 Service Date 1/22/2026 (5 ticket)		$ 18,135.59
o Invoice 73404448116 Service Date 1/19/2026 (4 ticket)		$13,720.29
o Invoice 73404448200 Service Date 1/20/2026 (4 ticket)		$ 15,380.46
o Invoice 73404449671 Service Date 1/19/2026 (4 ticket)		$ 14,766.89
• Overhead 10%		$ 9,290.29
• Profit 5%		$ 4,645.15
	Sub Total	$ 106,838.36
o Bond 2.3% of CO		$ 2,457.28
• Credit for Fill Export in Contract 789 ton		($ 5,700.98)
	Total	$ 103,594.66

Previous Subcontract Amount	**$**
x Add / Deduct this Change	**$ 103,594.66**
Revised Subcontract Total	**$**

Order 5986050
BOL 264680-25

NON-HAZARDOUS MANIFEST

WASTE MANAGEMENT

NON-HAZARDOUS MANIFEST	1. Generator's US EPA ID No.	Manifest Doc No.	2. Page 1 of	T-225

3. Generator's Mailing Address:	Generator's Site Address (if different than mailing):	A. Manifest Number
CLEAN EARTH 314-B WEST LANDSTREET ROAD ORLANDO FL 32824	CITY OF BRADENTON 707 2ND ST W BRADENTON FL 34205	417360FL +46
4. Generator's Phone 941-405-7200		B. State Generator's ID

5. Transporter 1 Company Name	6. US EPA ID Number	C. State Transporter's ID
Soil Tech Distributors		D. Transporter's Phone
7. Transporter 2 Company Name	8. US EPA ID Number	E. State Transporter's ID
		F. Transporter's Phone
9. Designated Facility Name and Site Address	10. US EPA ID Number	G. State Facility ID
Okeechobee Landfill 10800 N.E. 128th Avenue Okeechobee, FL 34973		H. State Facility Phone 863.357.0111

GENERATOR	11. Description of Waste Materials	12. Containers No.	12. Containers Type	13. Total Quantity	14. Unit Wt./Vol.	I. Misc. Comments
	a. Soil WM Profile # 417360FL	1	DT	28	Ton	
	b. WM Profile #					
	c. WM Profile #					
	d. WM Profile #					

J. Additional Descriptions for Materials Listed Above	K. Disposal Location			
	Cell		Level	
	Grid			

225

15. Special Handling Instructions and Additional Information

Purchase Order # EMERGENCY CONTACT / PHONE NO.:

16. GENERATOR'S CERTIFICATE:

I hereby certify that the above-described materials are not hazardous wastes as defined by CFR Part 261 or any applicable state law, have been fully and accurately described, classified and packaged and are in proper condition for transportation according to applicable regulations.

Printed Name	Signature "On behalf of"	Month	Day	Year
Alex Nilson		10	27	25

TRANSPORTER	17. Transporter 1 Acknowledgement of Receipt of Materials				
	Printed Name	Signature	Month	Day	Year
	Wilson Sanchez		10	27	25
	18. Transporter 2 Acknowledgement of Receipt of Materials				
	Printed Name	Signature	Month	Day	Year

FACILITY	19. Certificate of Final Treatment/Disposal				
	I certify, on behalf of the above listed treatment facility, that to the best of my knowledge, the above-described waste was managed in compliance with all applicable laws, regulations, permits and licenses on the dates listed above.				
	20. Facility Owner or Operator: Certification of receipt of non-hazardous materials covered by this manifest.				
	Printed Name	Signature	Month	Day	Year
			10	28	25

White- TREATMENT, STORAGE, DISPOSAL FACILITY COPY
Blue- GENERATOR #2 COPY
Yellow- GENERATOR #1 COPY
Pink- FACILITY USE ONLY
Gold- TRANSPORTER #1 COPY

CleanEarth

INVOICE # 73404448116
INVOICE DATE 02/03/2026 **SERVICE DATE** 01/19/2026
CUSTOMER ID # PX0657 **AX#** **TERMS** NET 30

PLEASE REMIT TO
29338 Network Pl. Chicago, IL 60673-1293
p. (866) 303-7344
e. CleanEarth-ESOLAR@cleanearthinc.com

ATTN.: REX NELSON JR.
B G GRADING, LLC.
3702 89TH ST E
PALMETTO, FL 34221-8734

SITE ADDRESS:
CITY OF BRADENTON
707 2ND ST W
BRADENTON, FL 34205

ORDER 6017244 City of Bradenton

01/19/2026			
Transportation Stop Charges :			
	THIRD PARTY TRANSPORTATION, COST PLUS-ROLL OFF- PER TON	26.38 @ 40.000 / E	$1,055.20
01/19/2026 Doc No. 011508-26 Manifest 011508-26 Waste Receipt			
1	417360FL-00 - (WM-OKEECHOBEE LANDFILL) SOIL	26.38 @ 60.420 / T	$1,593.88
01/20/2026			
Transportation Stop Charges :			
	THIRD PARTY TRANSPORTATION, COST PLUS-ROLL OFF- PER TON	29.76 @ 40.000 / E	$1,190.40
	THIRD PARTY TRANSPORTATION, COST PLUS-ROLL OFF- PER TON	30.93 @ 40.000 / E	$1,237.20
	THIRD PARTY TRANSPORTATION, COST PLUS-ROLL OFF- PER TON	29.21 @ 40.000 / E	$1,168.40
01/20/2026 Doc No. 011509-26 Manifest 011509-26 Waste Receipt			
1	417360FL-00 - (WM-OKEECHOBEE LANDFILL) SOIL	29.76 @ 60.420 / T	$1,798.10
01/20/2026 Doc No. 011510-26 Manifest 011510-26 Waste Receipt			
1	417360FL-00 - (WM-OKEECHOBEE LANDFILL) SOIL	30.93 @ 60.420 / T	$1,868.79
01/20/2026 Doc No. 011511-26 Manifest 011511-26 Waste Receipt			
1	417360FL-00 - (WM-OKEECHOBEE LANDFILL) SOIL	29.21 @ 60.420 / T	$1,764.87

DIRECT INQUIRES TO: ESOL Customer Experience Inquiries_eso@cleanearthinc.com

CleanEarth

INVOICE # 73404449671
INVOICE DATE 02/05/2026 **SERVICE DATE** 01/19/2026
CUSTOMER ID # PX0657 **AX#** **TERMS** NET 30

PLEASE REMIT TO
29338 Network Pl. Chicago, IL 60673-1293
p. (866) 303-7344
e. CleanEarth-ESOLAR@cleanearthinc.com

ATTN.: REX NELSON JR.
B G GRADING, LLC.
3702 89TH ST E
PALMETTO, FL 34221-8734

SITE ADDRESS:
CITY OF BRADENTON
707 2ND ST W
BRADENTON, FL 34205

ORDER 6017241 City of Bradenton

01/19/2026

Transportation Stop Charges :

	THIRD PARTY TRANSPORTATION, COST PLUS-ROLL OFF- PER TON	29.81 @ 40.000 / E	$1,192.40
	THIRD PARTY TRANSPORTATION, COST PLUS-ROLL OFF- PER TON	27.93 @ 40.000 / E	$1,117.20
	THIRD PARTY TRANSPORTATION, COST PLUS-ROLL OFF- PER TON	33.01 @ 40.000 / E	$1,320.40
	THIRD PARTY TRANSPORTATION, COST PLUS-ROLL OFF- PER TON	34.40 @ 40.000 / E	$1,376.00
01/19/2026 Doc No. 011500-26 Manifest 011500-26 Waste Receipt			
1	417360FL-00 - (WM-OKEECHOBEE LANDFILL) SOIL	29.81 @ 60.420 / T	$1,801.12
01/19/2026 Doc No. 011501-26 Manifest 011501-26 Waste Receipt			
1	417360FL-00 - (WM-OKEECHOBEE LANDFILL) SOIL	27.93 @ 60.420 / T	$1,687.53
01/19/2026 Doc No. 011503-26 Manifest 011503-26 Waste Receipt			
1	417360FL-00 - (WM-OKEECHOBEE LANDFILL) SOIL	33.01 @ 60.420 / T	$1,994.46
01/19/2026 Doc No. 011504-26 Manifest 011504-26 Waste Receipt			
1	417360FL-00 - (WM-OKEECHOBEE LANDFILL) SOIL	34.40 @ 60.420 / T	$2,078.45

DIRECT INQUIRES TO: ESOL Customer Experience Inquiries_eso@cleanearthinc.com

02

NON-HAZARDOUS MANIFEST

WASTE MANAGEMENT

NON-HAZARDOUS MANIFEST	1. Generator's US EPA ID No. EXE	Manifest Doc No.	2. Page 1 of 6017241

3. Generator's Mailing Address:	Generator's Site Address (if different than mailing):	A. Manifest Number	
CLEAN EARTH 314-B WEST LANDSTREET ROAD ORLANDO FL 32824	CITY OF BRADENTON 707 2ND ST W BRADENTON FL 34205	417360FL	011501-26
4. Generator's Phone 941-405-7200		B. State Generator's ID	2391

5. Transporter 1 Company Name	6. US EPA ID Number	C. State Transporter's ID
Soil Tech Distributors		D. Transporter's Phone
7. Transporter 2 Company Name	8. US EPA ID Number	E. State Transporter's ID
		F. Transporter's Phone
9. Designated Facility Name and Site Address Okeechobee Landfill 10800 N.E. 128th Avenue Okeechobee, FL 34973	10. US EPA ID Number	G. State Facility ID H. State Facility Phone 863.357.0111

GENERATOR	11. Description of Waste Materials	12. Containers No.	12. Containers Type	13. Total Quantity	14. Unit Wt./Vol.	I. Misc. Comments
	a. Soil WM Profile # 417360FL	1	DT	28	TON	Actual 27.93
	b. WM Profile #					
	c. WM Profile #					
	d. WM Profile #					

J. Additional Descriptions for Materials Listed Above	K. Disposal Location			
	Cell		Level	
	Grid			

15. Special Handling Instructions and Additional Information

Purchase Order # 10312758 EMERGENCY CONTACT / PHONE NO.:

16. GENERATOR'S CERTIFICATE:
I hereby certify that the above-described materials are not hazardous wastes as defined by CFR Part 261 or any applicable state law, have been fully and accurately described, classified and packaged and are in proper condition for transportation according to applicable regulations.

Printed Name	Signature "On behalf of"	Month	Day	Year
Rodovaldo Chavez		01	19	26

TRANSPORTER	17. Transporter 1 Acknowledgement of Receipt of Materials				
	Printed Name Rodovaldo	Signature	Month 01	Day 19	Year 26
	18. Transporter 2 Acknowledgement of Receipt of Materials				
	Printed Name	Signature	Month	Day	Year

FACILITY	19. Certificate of Final Treatment/Disposal I certify, on behalf of the above listed treatment facility, that to the best of my knowledge, the above-described waste was managed in compliance with all applicable laws, regulations, permits and licenses on the dates listed above.				
	20. Facility Owner or Operator: Certification of receipt of non-hazardous materials covered by this manifest.				
	Printed Name Gracie R.	Signature	Month 1	Day 19	Year 26

White- TREATMENT, STORAGE, DISPOSAL FACILITY COPY Blue- GENERATOR #2 COPY Yellow- GENERATOR #1 COPY

Pink- FACILITY USE ONLY Gold- TRANSPORTER #1 COPY

01

NON-HAZARDOUS MANIFEST

WASTE MANAGEMENT

NON-HAZARDOUS MANIFEST	1. Generator's US EPA ID No. EXE	Manifest Doc No.	2. Page 1 of	6017241

3. Generator's Mailing Address:	Generator's Site Address (if different than mailing):	A. Manifest Number	011500-26
CLEAN EARTH 314-B WEST LANDSTREET ROAD ORLANDO FL 32824	CITY OF BRADENTON 707 2ND ST W BRADENTON FL 34205	417360FL	B. State Generator's ID T-5262
4. Generator's Phone 941-405-7200			

5. Transporter 1 Company Name	6. US EPA ID Number	C. State Transporter's ID
Soil Tech Distributors		D. Transporter's Phone
7. Transporter 2 Company Name	8. US EPA ID Number	E. State Transporter's ID
		F. Transporter's Phone
9. Designated Facility Name and Site Address	10. US EPA ID Number	G. State Facility ID
Okeechobee Landfill 10800 N.E. 128th Avenue Okeechobee, FL 34973		H. State Facility Phone 863.357.0111

GENERATOR

11. Description of Waste Materials	12. Containers No.	12. Containers Type	13. Total Quantity	14. Unit Wt./Vol.	I. Misc. Comments
a. Soil WM Profile # 417360FL	1	DT	28	Ton	actual 29.81
b. WM Profile #					
c. WM Profile #					
d. WM Profile #					

J. Additional Descriptions for Materials Listed Above	K. Disposal Location		
	Cell		Level
	Grid		

15. Special Handling Instructions and Additional Information

Purchase Order # 10312758 EMERGENCY CONTACT / PHONE NO.:

16. GENERATOR'S CERTIFICATE:

I hereby certify that the above-described materials are not hazardous wastes as defined by CFR Part 261 or any applicable state law, have been fully and accurately described, classified and packaged and are in proper condition for transportation according to applicable regulations.

Printed Name	Signature "On behalf of"	Month	Day	Year
Rex Nelson		1	19	26

TRANSPORTER

17. Transporter 1 Acknowledgement of Receipt of Materials

Printed Name	Signature	Month	Day	Year
		01	19	26

18. Transporter 2 Acknowledgement of Receipt of Materials

Printed Name	Signature	Month	Day	Year

FACILITY

19. Certificate of Final Treatment/Disposal

I certify, on behalf of the above listed treatment facility, that to the best of my knowledge, the above-described waste was managed in compliance with all applicable laws, regulations, permits and licenses on the dates listed above.

20. Facility Owner or Operator: Certification of receipt of non-hazardous materials covered by this manifest.

Printed Name	Signature	Month	Day	Year
Gracie R.		1	19	26

White- TREATMENT, STORAGE, DISPOSAL FACILITY COPY Blue- GENERATOR #2 COPY Yellow- GENERATOR #1 COPY

Pink- FACILITY USE ONLY Gold- TRANSPORTER #1 COPY

282

Okee[illegible]ndfill
1080 [illegible] 28th Ave
Okeechobee, FL, 34972

Reprint
Ticket# 2293050

Ph: (863) 357-0824

Customer Name CLEAN EARTH 417360FL CIT
Ticket Date 01/19/2026
Payment Type Credit Account
Manual Ticket#
Route
Hauling Ticket#
Destination
Manifest 011503-26
Profile 417360FL (SOIL)
Generator CITY OF BRADENTON-707 CITY OF BRADENTON 707 2ND ST W BRADENTON
PO#

Carrier SOILTECH SoilTech
Vehicle# 570-2189
Container
Driver
Check#
Billing# 0007618
Grid

	Time	Scale	Operator	Inbound		
In	01/19/2026 11:58:34	Inbound 1	AMatheny		Gross	97920 lb
Out	01/19/2026 12:31:47	Outbound	11880355		Tare	31900 lb
					Net	66020 lb
					Tons	33.01

Comments

	Product	LD%	Qty	UOM	Rate	Tax/Fee	Amount	Origin
1	SOL-Contaminated Soil -	100	33.01	Tons				MANATEE
2	WWM-P475-Waste Water Ma	100		%				MANATEE
3	TPT-Transportation Char	100	33.01	Tons				MANATEE

Total Tax/Fees
Total Ticket

Driver`s Signature

Okee[illegible]ndfill
1080 [illegible] 28th Ave
Okeechobee, FL, 34972

Reprint
Ticket# 2293075

Ph: (863) 357-0824

Customer Name CLEAN EARTH 417360FL CIT
Ticket Date 01/19/2026
Payment Type Credit Account
Manual Ticket#
Route
Hauling Ticket#
Destination
Manifest 6017241 011504-26
Profile 417360FL (SOIL)
Generator CITY OF BRADENTON-707 CITY OF BRADENTON 707 2ND ST W BRADENTON
PO#

Carrier SOILTECH SoilTech
Vehicle# 2386-2109
Container
Driver
Check#
Billing# 0007618
Grid

	Time	Scale	Operator	Inbound		
In	01/19/2026 12:38:44	Inbound 1	AMatheny		Gross	98360 lb
Out	01/19/2026 12:56:18	Outbound	11880355		Tare	29560 lb
					Net	68800 lb
					Tons	34.40

Comments

	Product	LD%	Qty	UOM	Rate	Tax/Fee	Amount	Origin
1	SOL-Contaminated Soil -	100	34.40	Tons				MANATEE
2	WWM-P475-Waste Water Ma	100		%				MANATEE
3	TPT-Transportation Char	100	34.40	Tons				MANATEE

Total Tax/Fees
Total Ticket

Driver`s Signature

CleanEarth

INVOICE # 73404448200
INVOICE DATE 02/03/2026 **SERVICE DATE** 01/20/2026
CUSTOMER ID # PX0657 **AX#** **TERMS** NET 30

PLEASE REMIT TO
29338 Network Pl. Chicago, IL 60673-1293
p. (866) 303-7344
e. CleanEarth-ESOLAR@cleanearthinc.com

ATTN.: REX NELSON JR.
B G GRADING, LLC.
3702 89TH ST E
PALMETTO, FL 34221-8734

SITE ADDRESS:
CITY OF BRADENTON
707 2ND ST W
BRADENTON, FL 34205

ORDER 6017246 City of Bradenton

01/20/2026				
Transportation Stop Charges :				
	THIRD PARTY TRANSPORTATION, COST PLUS-ROLL OFF- PER TON		26.75 @ 40.000 / E	$1,070.00
01/20/2026 Doc No.	011512-26 Manifest 011512-26	Waste Receipt		
1	417360FL-00 - (WM-OKEECHOBEE LANDFILL) SOIL		26.75 @ 60.420 / T	$1,616.24
01/21/2026				
Transportation Stop Charges :				
	THIRD PARTY TRANSPORTATION, COST PLUS-ROLL OFF- PER TON		30.63 @ 40.000 / E	$1,225.20
	THIRD PARTY TRANSPORTATION, COST PLUS-ROLL OFF- PER TON		30.24 @ 40.000 / E	$1,209.60
	THIRD PARTY TRANSPORTATION, COST PLUS-ROLL OFF- PER TON		42.73 @ 40.000 / E	$1,709.20
01/21/2026 Doc No.	011514-26 Manifest 011514-26	Waste Receipt		
1	417360FL-00 - (WM-OKEECHOBEE LANDFILL) SOIL		30.63 @ 60.420 / T	$1,850.66
01/21/2026 Doc No.	011515-26 Manifest 011515-26	Waste Receipt		
1	417360FL-00 - (WM-OKEECHOBEE LANDFILL) SOIL		30.24 @ 60.420 / T	$1,827.10
01/21/2026 Doc No.	011516-26 Manifest 011516-26	Waste Receipt		
1	417360FL-00 - (WM-OKEECHOBEE LANDFILL) SOIL		42.73 @ 60.420 / T	$2,581.75

DIRECT INQUIRES TO: ESOL Customer Experience Inquiries_eso@cleanearthinc.com

#9 #9

NON-HAZARDOUS MANIFEST

WASTE MANAGEMENT

NON-HAZARDOUS MANIFEST	1. Generator's US EPA ID No. EXE	Manifest Doc No.	2. Page 1 of 6017246

3. Generator's Mailing Address: CLEAN EARTH 314-B WEST LANDSTREET ROAD ORLANDO FL 32824	Generator's Site Address (if different than mailing): CITY OF BRADENTON 707 2ND ST W BRADENTON FL 34205	A. Manifest Number 417360FL 011512-26
4. Generator's Phone 941-405-7200		B. State Generator's ID S262

5. Transporter 1 Company Name: Soil Tech Distributors	6. US EPA ID Number	C. State Transporter's ID
		D. Transporter's Phone
7. Transporter 2 Company Name	8. US EPA ID Number	E. State Transporter's ID
		F. Transporter's Phone
9. Designated Facility Name and Site Address: Okeechobee Landfill 10800 N.E. 128th Avenue Okeechobee, FL 34973	10. US EPA ID Number	G. State Facility ID
		H. State Facility Phone 863.357.0111

GENERATOR

11. Description of Waste Materials	12. Containers No.	Type	13. Total Quantity	14. Unit Wt./Vol.	I. Misc. Comments
a. Soil WM Profile # 417360FL	1	DT	28	Ton	actual 26.75 T
b. WM Profile #					
c. WM Profile #					
d. WM Profile #					

J. Additional Descriptions for Materials Listed Above

K. Disposal Location

Cell		Level	
Grid			

15. Special Handling Instructions and Additional Information

Purchase Order # 10312764 EMERGENCY CONTACT / PHONE NO.:

16. GENERATOR'S CERTIFICATE:

I hereby certify that the above-described materials are not hazardous wastes as defined by CFR Part 261 or any applicable state law, have been fully and accurately described, classified and packaged and are in proper condition for transportation according to applicable regulations.

Printed Name	Signature "On behalf of"	Month	Day	Year
Rex Nelson	[signature]	1	20	26

TRANSPORTER

17. Transporter 1 Acknowledgement of Receipt of Materials

Printed Name	Signature	Month	Day	Year
Eugenio	[signature]	01	20	26

18. Transporter 2 Acknowledgement of Receipt of Materials

Printed Name	Signature	Month	Day	Year

FACILITY

19. Certificate of Final Treatment/Disposal

I certify, on behalf of the above listed treatment facility, that to the best of my knowledge, the above-described waste was managed in compliance with all applicable laws, regulations, permits and licenses on the dates listed above.

20. Facility Owner or Operator: Certification of receipt of non-hazardous materials covered by this manifest.

Printed Name	Signature	Month	Day	Year
Erica R.	[signature]	1	20	26

White- TREATMENT, STORAGE, DISPOSAL FACILITY COPY Blue- GENERATOR #2 COPY Yellow- GENERATOR #1 COPY

Pink- FACILITY USE ONLY Gold- TRANSPORTER #1 COPY

202-2607

10 #10

NON-HAZARDOUS MANIFEST

WASTE MANAGEMENT

NON-HAZARDOUS MANIFEST	1. Generator's US EPA ID No. EXE	Manifest Doc No.	2. Page 1 of	6017246

3. Generator's Mailing Address:
CLEAN EARTH
314-B WEST LANDSTREET ROAD
ORLANDO FL 32824

4. Generator's Phone 941-405-7200

Generator's Site Address (if different than mailing):
CITY OF BRADENTON
707 2ND ST W
BRADENTON FL 34205

A. Manifest Number 417360FL 011514-26

B. State Generator's ID 5262

5. Transporter 1 Company Name: Soil Tech Distributors	6. US EPA ID Number	C. State Transporter's ID D. Transporter's Phone
7. Transporter 2 Company Name	8. US EPA ID Number	E. State Transporter's ID F. Transporter's Phone
9. Designated Facility Name and Site Address: Okeechobee Landfill, 10800 N.E. 128th Avenue, Okeechobee, FL 34973	10. US EPA ID Number	G. State Facility ID H. State Facility Phone 863.357.0111

GENERATOR

11. Description of Waste Materials	12. Containers No.	12. Containers Type	13. Total Quantity	14. Unit Wt./Vol.	I. Misc. Comments
a. Soil WM Profile # 417360FL	1	DT	28	TON	actual 30.63
b. WM Profile #					
c. WM Profile #					
d. WM Profile #					

J. Additional Descriptions for Materials Listed Above

K. Disposal Location: Cell | Level | Grid

15. Special Handling Instructions and Additional Information

Purchase Order # 10312764 EMERGENCY CONTACT / PHONE NO.:

16. GENERATOR'S CERTIFICATE:
I hereby certify that the above-described materials are not hazardous wastes as defined by CFR Part 261 or any applicable state law, have been fully and accurately described, classified and packaged and are in proper condition for transportation according to applicable regulations.

Printed Name	Signature "On behalf of"	Month	Day	Year
Rex Nelson		1	28	26

TRANSPORTER

17. Transporter 1 Acknowledgement of Receipt of Materials				
Printed Name: Eugenio	Signature	1	27	26
18. Transporter 2 Acknowledgement of Receipt of Materials				
Printed Name	Signature			

FACILITY

19. Certificate of Final Treatment/Disposal
I certify, on behalf of the above listed treatment facility, that to the best of my knowledge, the above-described waste was managed in compliance with all applicable laws, regulations, permits and licenses on the dates listed above.

20. Facility Owner or Operator: Certification of receipt of non-hazardous materials covered by this manifest.

Printed Name	Signature	Month	Day	Year
		1	21	26

White- TREATMENT, STORAGE, DISPOSAL FACILITY COPY
Blue- GENERATOR #2 COPY
Yellow- GENERATOR #1 COPY
Pink- FACILITY USE ONLY
Gold- TRANSPORTER #1 COPY

2015

NON-HAZARDOUS MANIFEST

#11

WASTE MANAGEMENT

NON-HAZARDOUS MANIFEST	1. Generator's US EPA ID No. EXE	Manifest Doc No.	2. Page 1 of 6017245

3. Generator's Mailing Address:	Generator's Site Address (if different than mailing):	A. Manifest Number / B. State Generator's ID
CLEAN EARTH 314-B WEST LANDSTREET ROAD ORLANDO FL 32824	CITY OF BRADENTON 707 2ND ST W BRADENTON FL 34205	417360FL / 011515-26 S2313
4. Generator's Phone 941-405-7200		

5. Transporter 1 Company Name	6. US EPA ID Number	C. State Transporter's ID / D. Transporter's Phone
Soil Tech Distributors		
7. Transporter 2 Company Name	8. US EPA ID Number	E. State Transporter's ID / F. Transporter's Phone
9. Designated Facility Name and Site Address	10. US EPA ID Number	G. State Facility ID / H. State Facility Phone
Okeechobee Landfill 10800 N.E. 128th Avenue Okeechobee, FL 34973		863.357.0111

GENERATOR

11. Description of Waste Materials	12. Containers No.	12. Containers Type	13. Total Quantity	14. Unit Wt./Vol.	I. Misc. Comments
a. Soil WM Profile # 417360FL	1	DT	28	TON	actual 30.24
b. WM Profile #					
c. WM Profile #					
d. WM Profile #					

J. Additional Descriptions for Materials Listed Above	K. Disposal Location: Cell / Grid / Level

15. Special Handling Instructions and Additional Information

Purchase Order # 10312764 EMERGENCY CONTACT / PHONE NO.:

16. GENERATOR'S CERTIFICATE:
I hereby certify that the above-described materials are not hazardous wastes as defined by CFR Part 261 or any applicable state law, have been fully and accurately described, classified and packaged and are in proper condition for transportation according to applicable regulations.

Printed Name	Signature "On behalf of"	Month	Day	Year
Alex Nelsen		1	28	26

TRANSPORTER

17. Transporter 1 Acknowledgement of Receipt of Materials

Printed Name	Signature	Month	Day	Year
DAVID W. SOZIO		1	27	26

18. Transporter 2 Acknowledgement of Receipt of Materials

Printed Name	Signature	Month	Day	Year

FACILITY

19. Certificate of Final Treatment/Disposal
I certify, on behalf of the above listed treatment facility, that to the best of my knowledge, the above-described waste was managed in compliance with all applicable laws, regulations, permits and licenses on the dates listed above.

20. Facility Owner or Operator: Certification of receipt of non-hazardous materials covered by this manifest.

Printed Name	Signature	Month	Day	Year
Erica R.		1	28	26

White- TREATMENT, STORAGE, DISPOSAL FACILITY COPY
Blue- GENERATOR #2 COPY
Yellow- GENERATOR #1 COPY
Pink- FACILITY USE ONLY
Gold- TRANSPORTER #1 COPY

#12

NON-HAZARDOUS MANIFEST

WASTE MANAGEMENT

NON-HAZARDOUS MANIFEST	1. Generator's US EPA ID No. EXE	Manifest Doc No.	2. Page 1 of	6017246

3. Generator's Mailing Address:	Generator's Site Address (if different than mailing):	A. Manifest Number	
CLEAN EARTH 314-B WEST LANDSTREET ROAD ORLANDO FL 32824	CITY OF BRADENTON 707 2ND ST W BRADENTON FL 34205	417360FL	011516-Z6
4. Generator's Phone 941-405-7200		B. State Generator's ID 2303	

5. Transporter 1 Company Name	6. US EPA ID Number	C. State Transporter's ID
Soil Tech Distributors		D. Transporter's Phone
7. Transporter 2 Company Name	8. US EPA ID Number	E. State Transporter's ID
		F. Transporter's Phone
9. Designated Facility Name and Site Address	10. US EPA ID Number	G. State Facility ID
Okeechobee Landfill 10800 N.E. 128th Avenue Okeechobee, FL 34973		H. State Facility Phone 863.357.0111

GENERATOR	11. Description of Waste Materials	12. Containers No.	12. Containers Type	13. Total Quantity	14. Unit Wt./Vol.	I. Misc. Comments
	a. Soil WM Profile # 417360FL	1	DT	28	T	actual 42.73 T
	b. WM Profile #					
	c. WM Profile #					
	d. WM Profile #					

J. Additional Descriptions for Materials Listed Above	K. Disposal Location			
	Cell		Level	
	Grid			

15. Special Handling Instructions and Additional Information

Purchase Order # 10112764 EMERGENCY CONTACT / PHONE NO.:

16. GENERATOR'S CERTIFICATE:
I hereby certify that the above-described materials are not hazardous wastes as defined by CFR Part 261 or any applicable state law, have been fully and accurately described, classified and packaged and are in proper condition for transportation according to applicable regulations.

Printed Name	Signature "On behalf of"	Month	Day	Year
Kirk Nelson		1	21	26

TRANSPORTER	17. Transporter 1 Acknowledgement of Receipt of Materials				
	Printed Name	Signature	Month	Day	Year
			1	21	26
	18. Transporter 2 Acknowledgement of Receipt of Materials				
	Printed Name	Signature	Month	Day	Year

2303

FACILITY	19. Certificate of Final Treatment/Disposal I certify, on behalf of the above listed treatment facility, that to the best of my knowledge, the above-described waste was managed in compliance with all applicable laws, regulations, permits and licenses on the dates listed above.				
	20. Facility Owner or Operator: Certification of receipt of non-hazardous materials covered by this manifest.				
	Printed Name	Signature	Month	Day	Year
			1	22	26

White- TREATMENT, STORAGE, DISPOSAL FACILITY COPY
Blue- GENERATOR #2 COPY
Yellow- GENERATOR #1 COPY
Pink- FACILITY USE ONLY
Gold- TRANSPORTER #1 COPY

CleanEarth

INVOICE # 73404448093
INVOICE DATE 02/03/2026 **SERVICE DATE** 01/21/2026
CUSTOMER ID # PX0657 **AX#** **TERMS** NET 30

PLEASE REMIT TO
29338 Network Pl. Chicago, IL 60673-1293
p. (866) 303-7344
e. CleanEarth-ESOLAR@cleanearthinc.com

ATTN.: REX NELSON JR.
B G GRADING, LLC.
3702 89TH ST E
PALMETTO, FL 34221-8734

SITE ADDRESS:
CITY OF BRADENTON
707 2ND ST W
BRADENTON, FL 34205

ORDER 6020136 City of Bradenton

01/21/2026			
Transportation Stop Charges :			
	THIRD PARTY TRANSPORTATION, COST PLUS-ROLL OFF- PER TON	28.99 @ 40.000 / E	$1,159.60
01/21/2026 Doc No. 017099-26 Manifest 017099-26 Waste Receipt			
1	417360FL-00 - (WM-OKEECHOBEE LANDFILL) SOIL	28.99 @ 60.420 / T	$1,751.58
01/22/2026			
Transportation Stop Charges :			
	THIRD PARTY TRANSPORTATION, COST PLUS-ROLL OFF- PER TON	34.12 @ 40.000 / E	$1,364.80
	THIRD PARTY TRANSPORTATION, COST PLUS-ROLL OFF- PER TON	31.37 @ 40.000 / E	$1,254.80
	THIRD PARTY TRANSPORTATION, COST PLUS-ROLL OFF- PER TON	26.72 @ 40.000 / E	$1,068.80
	THIRD PARTY TRANSPORTATION, COST PLUS-ROLL OFF- PER TON	29.96 @ 40.000 / E	$1,198.40
01/22/2026 Doc No. 017103-26 Manifest 017103-26 Waste Receipt			
1	417360FL-00 - (WM-OKEECHOBEE LANDFILL) SOIL	34.12 @ 60.420 / T	$2,061.53
01/22/2026 Doc No. 017104-26 Manifest 017104-26 Waste Receipt			
1	417360FL-00 - (WM-OKEECHOBEE LANDFILL) SOIL	31.37 @ 60.420 / T	$1,895.38
01/22/2026 Doc No. 017105-26 Manifest 017105-26 Waste Receipt			
1	417360FL-00 - (WM-OKEECHOBEE LANDFILL) SOIL	26.72 @ 60.420 / T	$1,614.42
01/22/2026 Doc No. 017107-26 Manifest 017107-26 Waste Receipt			
1	417360FL-00 - (WM-OKEECHOBEE LANDFILL) SOIL	29.96 @ 60.420 / T	$1,810.18
01/23/2026			
Transportation Stop Charges :			
	THIRD PARTY TRANSPORTATION, COST PLUS-ROLL OFF- PER TON	30.32 @ 40.000 / E	$1,212.80
01/23/2026 Doc No. 024222-26 Manifest 0017103-26 Waste Receipt			
1	417360FL-00 - (WM-OKEECHOBEE LANDFILL) SOIL	30.32 @ 60.420 / T	$1,831.93

DIRECT INQUIRES TO: ESOL Customer Experience Inquiries_eso@cleanearthinc.com

Okee[illegible] Landfill
1080[illegible] E [illegible]28th Ave
Okeechobee, FL, 34972[illegible]

Reprint
Ticket# 2294138

Ph: (863) 357-0824

Customer Name CLEAN EARTH 417360FL CIT
Ticket Date 01/22/2026
Payment Type Credit Account
Manual Ticket#
Route
Hauling Ticket#
Destination
Manifest 6020136 017099-26
Profile 417360FL (SOIL)
Generator CITY OF BRADENTON-707 CITY OF BRADENTON 707 2ND ST W BRADENTON
PO#

Carrier SOILTECH SoilTech
Vehicle# 2380-385
Container
Driver
Check#
Billing# 0007618
Grid

	Time	Scale	Operator	Inbound	Gross	87600 lb
In	01/22/2026 07:27:19	Inbound 1	AMatheny		Tare	29620 lb
Out	01/22/2026 07:48:58	Outbound	ncruz3		Net	57980 lb
					Tons	28.99

Comments

Product	LD%	Qty	UOM	Rate	Tax/Fee	Amount	Origin
1 SOL-Contaminated Soil -	100	28.99	Tons				MANATEE
2 WWM-P475-Waste Water Ma	100		%				MANATEE
3 TPT-Transportation Char	100	28.99	Tons				MANATEE

Total Tax/Fees
Total Ticket

Driver`s Signature

NON-HAZARDOUS MANIFEST

WASTE MANAGEMENT

NON-HAZARDOUS MANIFEST	1. Generator's US EPA ID No. EXE	Manifest Doc No.	2. Page 1 of 6020136

3. Generator's Mailing Address:
CLEAN EARTH
314-B WEST LANDSTREET ROAD
ORLANDO FL 32824

4. Generator's Phone 941-405-7200

Generator's Site Address (if different than mailing):
CITY OF BRADENTON
707 2ND ST W
BRADENTON FL 34205

A. Manifest Number 417360FL — 0017103-26

B. State Generator's ID S3810

5. Transporter 1 Company Name
Soil Tech Distributors

6. US EPA ID Number

C. State Transporter's ID

D. Transporter's Phone

7. Transporter 2 Company Name

8. US EPA ID Number

E. State Transporter's ID

F. Transporter's Phone

9. Designated Facility Name and Site Address
Okeechobee Landfill
10800 N.E. 128th Avenue
Okeechobee, FL 34973

10. US EPA ID Number

G. State Facility ID

H. State Facility Phone 863.357.0111

GENERATOR	11. Description of Waste Materials	12. Containers No.	12. Containers Type	13. Total Quantity	14. Unit Wt./Vol.	I. Misc. Comments
	a. Soil — WM Profile # 417360FL	1	DT	28	Ton	actual 30.32 T
	b. — WM Profile #					
	c. — WM Profile #					
	d. — WM Profile #					

J. Additional Descriptions for Materials Listed Above

K. Disposal Location — Cell | Level | Grid

15. Special Handling Instructions and Additional Information

Purchase Order # — EMERGENCY CONTACT / PHONE NO.:

16. GENERATOR'S CERTIFICATE:
I hereby certify that the above-described materials are not hazardous wastes as defined by CFR Part 261 or any applicable state law, have been fully and accurately described, classified and packaged and are in proper condition for transportation according to applicable regulations.

Printed Name	Signature "On behalf of"	Month	Day	Year
Rick Nelson		1	23	26

TRANSPORTER	17. Transporter 1 Acknowledgement of Receipt of Materials — Printed Name	Signature	Month	Day	Year
			1	23	26
	18. Transporter 2 Acknowledgement of Receipt of Materials — Printed Name	Signature	Month	Day	Year

FACILITY	19. Certificate of Final Treatment/Disposal — Printed Name	Signature	Month	Day	Year
	I certify, on behalf of the above listed treatment facility, that to the best of my knowledge, the above-described waste was managed in compliance with all applicable laws, regulations, permits and licenses on the dates listed above.				
	20. Facility Owner or Operator: Certification of receipt of non-hazardous materials covered by this manifest. — Printed Name	Signature	Month	Day	Year
			1	26	26

White- TREATMENT, STORAGE, DISPOSAL FACILITY COPY
Blue- GENERATOR #2 COPY
Yellow- GENERATOR #1 COPY
Pink- FACILITY USE ONLY
Gold- TRANSPORTER #1 COPY

381D

Okee[illegible]ndfill
1080[illegible] 28th Ave
Okeechobee, FL, 34972

Reprint
Ticket# 2294745

Ph: (863) 357-0824

Customer Name CLEAN EARTH 417360FL CIT
Ticket Date 01/23/2026
Payment Type Credit Account
Manual Ticket#
Route
Hauling Ticket#
Destination
Manifest 017107-26
Profile 417360FL (SOIL)
Generator CITY OF BRADENTON-707 CITY OF BRADENTON 707 2ND ST W BRADENTON
PO#

Carrier SOILTECH SoilTech
Vehicle# 3810-378
Container
Driver
Check#
Billing# 0007618
Grid

	Time	Scale	Operator	Inbound	Gross	91940 lb
In	01/23/2026 11:03:56	Inbound 1	11880355		Tare	32020 lb
Out	01/23/2026 11:22:15	Outbound	NCRUZ3		Net	59920 lb
					Tons	29.96

Comments

	Product	LD%	Qty	UOM	Rate	Tax/Fee	Amount	Origin
1	SOL-Contaminated Soil -	100	29.96	Tons				MANATEE
2	WWM-P475-Waste Water Ma	100		%				MANATEE
3	TPT-Transportation Char	100	29.96	Tons				MANATEE

Total Tax/Fees
Total Ticket

Driver`s Signature

Okee[illegible]ndfill
1080[illegible] E [illegible]28th Ave
Okeechobee, FL, 34972-[illegible]

Reprint
Ticket# 2294330

Ph: (863) 357-0824

Customer Name CLEAN EARTH 417360FL CIT
Ticket Date 01/22/2026
Payment Type Credit Account
Manual Ticket#
Route
Hauling Ticket#
Destination
Manifest 6020136 017103-26
Profile 417360FL (SOIL)
Generator CITY OF BRADENTON-707 CITY OF BRADENTON 707 2ND ST W BRADENTON
PO#

Carrier SOILTECH SoilTech
Vehicle# 2386-2109
Container
Driver
Check#
Billing# 0007618
Grid

	Time	Scale	Operator	Inbound		
In	01/22/2026 11:51:49	inbound 2	AMatheny		Gross	98260 lb
Out	01/22/2026 12:14:30	Outbound	erosales		Tare	30020 lb
					Net	68240 lb
					Tons	34.12

Comments

	Product	LD%	Qty	UOM	Rate	Tax/Fee	Amount	Origin
1	SOL-Contaminated Soil -	100	34.12	Tons				MANATEE
2	WWM-P475-Waste Water Ma	100		%				MANATEE
3	TPT-Transportation Char	100	34.12	Tons				MANATEE

Total Tax/Fees
Total Ticket

Driver`s Signature

Okee[illegible]ndfill
1080[illegible] 28th Ave
Okeechobee, FL, 34972-[illegible]

Reprint
Ticket# 2294414

Ph: (863) 357-0824

Customer Name CLEAN EARTH 417360FL CIT
Ticket Date 01/22/2026
Payment Type Credit Account
Manual Ticket#
Route
Hauling Ticket#
Destination
Manifest 6020136 017104-26
Profile 417360FL (SOIL)
Generator CITY OF BRADENTON-707 CITY OF BRADENTON 707 2ND ST W BRADENTON
PO#

Carrier SOILTECH SoilTech
Vehicle# 2313-2194
Container
Driver
Check#
Billing# 0007618
Grid

	Time	Scale	Operator	Inbound		
In	01/22/2026 14:34:19	Inbound 1	erosales		Gross	93920 lb
Out	01/22/2026 14:45:46	Outbound	11880355		Tare	31180 lb
					Net	62740 lb
					Tons	31.37

Comments

	Product	LD%	Qty	UOM	Rate	Tax/Fee	Amount	Origin
1	SOL-Contaminated Soil -	100	31.37	Tons				MANATEE
2	WWM-P475-Waste Water Ma	100		%				MANATEE
3	TPT-Transportation Char	100	31.37	Tons				MANATEE

Total Tax/Fees
Total Ticket

Driver`s Signature

15

NON-HAZARDOUS MANIFEST

WASTE MANAGEMENT

NON-HAZARDOUS MANIFEST	1. Generator's US EPA ID No. EXE	Manifest Doc No.	2. Page 1 of	6020136

3. Generator's Mailing Address:	Generator's Site Address (If different than mailing):	A. Manifest Number	017104-26
CLEAN EARTH 314-B WEST LANDSTREET ROAD ORLANDO FL 32824	CITY OF BRADENTON 707 2ND ST W BRADENTON FL 34205	417360FL	B. State Generator's ID S2313
4. Generator's Phone 941-405-7200			

5. Transporter 1 Company Name	6. US EPA ID Number	C. State Transporter's ID
Soil Tech Distributors		D. Transporter's Phone
7. Transporter 2 Company Name	8. US EPA ID Number	E. State Transporter's ID
		F. Transporter's Phone
9. Designated Facility Name and Site Address	10. US EPA ID Number	G. State Facility ID
Okeechobee Landfill 10800 N.E. 128th Avenue Okeechobee, FL 34973		H. State Facility Phone 863.357.0111

GENERATOR

11. Description of Waste Materials	12. Containers No.	12. Containers Type	13. Total Quantity	14. Unit Wt./Vol.	I. Misc. Comments
a. Soil WM Profile # 417360FL	1	DT	28	TON	actual 31.37 T
b. WM Profile #					
c. WM Profile #					
d. WM Profile #					

J. Additional Descriptions for Materials Listed Above	K. Disposal Location		
	Cell		Level
	Grid		

15. Special Handling Instructions and Additional Information

Purchase Order # EMERGENCY CONTACT / PHONE NO.:

16. GENERATOR'S CERTIFICATE:

I hereby certify that the above-described materials are not hazardous wastes as defined by CFR Part 261 or any applicable state law, have been fully and accurately described, classified and packaged and are in proper condition for transportation according to applicable regulations.

Printed Name	Signature "On behalf of"	Month	Day	Year
Rex Nelson		1	22	26

TRANSPORTER

17. Transporter 1 Acknowledgement of Receipt of Materials				
Printed Name	Signature	Month	Day	Year
DAVID SOZIO		1	22	26
18. Transporter 2 Acknowledgement of Receipt of Materials				
Printed Name	Signature	Month	Day	Year

FACILITY

19. Certificate of Final Treatment/Disposal

I certify, on behalf of the above listed treatment facility, that to the best of my knowledge, the above-described waste was managed in compliance with all applicable laws, regulations, permits and licenses on the dates listed above.

20. Facility Owner or Operator: Certification of receipt of non-hazardous materials covered by this manifest.

Printed Name	Signature	Month	Day	Year
Erica R.		1	22	26

White- TREATMENT, STORAGE, DISPOSAL FACILITY COPY
Blue- GENERATOR #2 COPY
Yellow- GENERATOR #1 COPY
Pink- FACILITY USE ONLY
Gold- TRANSPORTER #1 COPY

CleanEarth

INVOICE # 73404448103
INVOICE DATE 02/03/2026 **SERVICE DATE** 01/22/2026
CUSTOMER ID # PX0657 **AX#** **TERMS** NET 30

PLEASE REMIT TO
29338 Network Pl. Chicago, IL 60673-1293
p. (866) 303-7344
e. CleanEarth-ESOLAR@cleanearthinc.com

ATTN.: REX NELSON JR.
B G GRADING, LLC.
3702 89TH ST E
PALMETTO, FL 34221-8734

SITE ADDRESS:
CITY OF BRADENTON
707 2ND ST W
BRADENTON, FL 34205

ORDER 6020140 City of Bradenton

01/22/2026				
Transportation Stop Charges :				
		THIRD PARTY TRANSPORTATION, COST PLUS-ROLL OFF- PER TON	29.84 @ 40.000 / E	$1,193.60
01/22/2026	Doc No. 017167-26	Manifest 017167-26	Waste Receipt	
	1	417360FL-00 - (WM-OKEECHOBEE LANDFILL) SOIL	29.84 @ 60.420 / T	$1,802.93
01/23/2026				
Transportation Stop Charges :				
		THIRD PARTY TRANSPORTATION, COST PLUS-ROLL OFF- PER TON	26.55 @ 40.000 / E	$1,062.00
		THIRD PARTY TRANSPORTATION, COST PLUS-ROLL OFF- PER TON	33.08 @ 40.000 / E	$1,323.20
		THIRD PARTY TRANSPORTATION, COST PLUS-ROLL OFF- PER TON	30.87 @ 40.000 / E	$1,234.80
		THIRD PARTY TRANSPORTATION, COST PLUS-ROLL OFF- PER TON	33.36 @ 40.000 / E	$1,334.40
01/23/2026	Doc No. 017169-26	Manifest 017169-26	Waste Receipt	
	1	417360FL-00 - (WM-OKEECHOBEE LANDFILL) SOIL	26.55 @ 60.420 / T	$1,604.15
01/23/2026	Doc No. 017170-26	Manifest 017170-26	Waste Receipt	
	1	417360FL-00 - (WM-OKEECHOBEE LANDFILL) SOIL	30.87 @ 60.420 / T	$1,865.17
01/23/2026	Doc No. 017171-26	Manifest 017171-26	Waste Receipt	
	1	417360FL-00 - (WM-OKEECHOBEE LANDFILL) SOIL	33.08 @ 60.420 / T	$1,998.69
01/23/2026	Doc No. 017172-26	Manifest 017172-26	Waste Receipt	
	1	417360FL-00 - (WM-OKEECHOBEE LANDFILL) SOIL	33.36 @ 60.420 / T	$2,015.61

DIRECT INQUIRES TO: ESOL Customer Experience Inquiries_eso@cleanearthinc.com

Okeechobee Landfill
10801 [illegible] 28th Ave
Okeechobee, FL, 34972

Reprint
Ticket# 2294533

Ph: (863) 357-0824

Customer Name CLEAN EARTH 417360FL CIT
Ticket Date 01/23/2026
Payment Type Credit Account
Manual Ticket#
Route
Hauling Ticket#
Destination
Manifest 017167-26
Profile 417360FL (SOIL)
Generator CITY OF BRADENTON-707 CITY OF BRADENTON 707 2ND ST W BRADENTON
PO#

Carrier SOILTECH SoilTech
Vehicle# 2303-2195
Container
Driver
Check#
Billing# 0007618
Grid

	Time	Scale	Operator	Inbound		
In	01/23/2026 05:58:02	Inbound 1	ncruz3		Gross	91140 lb
Out	01/23/2026 06:31:57	Outbound	ncruz3		Tare	31460 lb
					Net	59680 lb
					Tons	29.84

Comments

	Product	LD%	Qty	UOM	Rate	Tax/Fee	Amount	Origin
1	SOL-Contaminated Soil -	100	29.84	Tons				MANATEE
2	WWM-P475-Waste Water Ma	100		%				MANATEE
3	TPT-Transportation Char	100	29.84	Tons				MANATEE

Total Tax/Fees
Total Ticket

Driver`s Signature

Okee[illegible]ndfill
1080[illegible] E 28th Ave
Okeechobee, FL, 34972-[illegible] Ph: (863) 357-0824

Reprint
Ticket# 2294687

Customer Name CLEAN EARTH 417360FL CIT Carrier SOILTECH SoilTech
Ticket Date 01/23/2026 Vehicle# 560-306
Payment Type Credit Account Container
Manual Ticket# Driver
Route Check#
Hauling Ticket# Billing# 0007618
Destination Grid
Manifest 6020140 017169-26
Profile 417360FL (SOIL)
Generator CITY OF BRADENTON-707 CITY OF BRADENTON 707 2ND ST W BRADENTON
PO#

	Time	Scale	Operator	Inbound		
In	01/23/2026 09:53:22	Inbound 3	AMatheny		Gross	86180 lb
Out	01/23/2026 10:22:03	Outbound	NCRUZ3		Tare	33080 lb
					Net	53100 lb
					Tons	26.55

Comments

	Product	LD%	Qty	UOM	Rate	Tax/Fee	Amount	Origin
1	SOL-Contaminated Soil -	100	26.55	Tons				MANATEE
2	WWM-P475-Waste Water Ma	100		%				MANATEE
3	TPT-Transportation Char	100	26.55	Tons				MANATEE

Total Tax/Fees
Total Ticket

Driver`s Signature

Okee[illegible]ndfill
1080[illegible] E 28th Ave
Okeechobee, FL, 34972-[illegible]

Reprint
Ticket# 2294942

Ph: (863) 357-0824

Customer Name CLEAN EARTH 417360FL CIT
Ticket Date 01/23/2026
Payment Type Credit Account
Manual Ticket#
Route
Hauling Ticket#
Destination
Manifest 017171-26
Profile 417360FL (SOIL)
Generator CITY OF BRADENTON-707 CITY OF BRADENTON 707 2ND ST W BRADENTON
PO#

Carrier SOILTECH SoilTech
Vehicle# 2303-2195
Container
Driver
Check#
Billing# 0007618
Grid

	Time	Scale	Operator	Inbound		
In	01/23/2026 15:56:15	Inbound 2	11880355		Gross	97160 lb
Out	01/23/2026 16:13:58	Outbound	11880355		Tare	31000 lb
					Net	66160 lb
					Tons	33.08

Comments

	Product	LD%	Qty	UOM	Rate	Tax/Fee	Amount	Origin
1	SOL-Contaminated Soil -	100	33.08	Tons				MANATEE
2	WWM-P475-Waste Water Ma	100		%				MANATEE
3	TPT-Transportation Char	100	33.08	Tons				MANATEE

Total Tax/Fees
Total Ticket

Driver`s Signature

Okeechobee Landfill
10800 E 28th Ave
Okeechobee, FL, 34972

Reprint
Ticket# 2294961

Ph: (863) 357-0824

Customer Name CLEAN EARTH 417360FL CIT
Ticket Date 01/23/2026
Payment Type Credit Account
Manual Ticket#
Route
Hauling Ticket#
Destination
Manifest 017170-26
Profile 417360FL (SOIL)
Generator CITY OF BRADENTON-707 CITY OF BRADENTON 707 2ND ST W BRADENTON
PO#

Carrier SOILTECH SoilTech
Vehicle# 2313-2194
Container
Driver
Check#
Billing# 0007618
Grid

	Time	Scale	Operator	Inbound		
In	01/23/2026 16:26:15	Inbound 1	11880355		Gross	92880 lb
Out	01/23/2026 16:45:07	Outbound	11880355		Tare	31140 lb
					Net	61740 lb
					Tons	30.87

Comments

	Product	LD%	Qty	UOM	Rate	Tax/Fee	Amount	Origin
1	SOL-Contaminated Soil -	100	30.87	Tons				MANATEE
2	WWM-P475-Waste Water Ma	100		%				MANATEE
3	TPT-Transportation Char	100	30.87	Tons				MANATEE

Total Tax/Fees
Total Ticket

Driver`s Signature

Okee[illegible]ndfill
1080[illegible] 28th Ave
Okeechobee, FL, 34972

Reprint
Ticket# 2295006

Ph: (863) 357-0824

Customer Name CLEAN EARTH 417360FL CIT
Ticket Date 01/24/2026
Payment Type Credit Account
Manual Ticket#
Route
Hauling Ticket#
Destination
Manifest 6020140 017172-26
Profile 417360FL (SOIL)
Generator CITY OF BRADENTON-707 CITY OF BRADENTON 707 2ND ST W BRADENTON
PO#

Carrier SOILTECH SoilTech
Vehicle# 560-306
Container
Driver
Check#
Billing# 0007618
Grid

	Time	Scale	Operator	Inbound		
In	01/24/2026 06:25:55	Inbound 1	AMatheny		Gross	99280 lb
Out	01/24/2026 06:54:27	Outbound	AMatheny		Tare	32560 lb
					Net	66720 lb
					Tons	33.36

Comments

	Product	LD%	Qty	UOM	Rate	Tax/Fee	Amount	Origin
1	SOL-Contaminated Soil -	100	33.36	Tons				MANATEE
2	WWM-P475-Waste Water Ma	100		%				MANATEE
3	TPT-Transportation Char	100	33.36	Tons				MANATEE

Total Tax/Fees
Total Ticket

Driver`s Signature

CleanEarth

INVOICE # **73404439734**
INVOICE DATE 01/14/2026 **SERVICE DATE** 11/07/2025
CUSTOMER ID # PX0657 **AX#** **TERMS** NET 30

PLEASE REMIT TO
29338 Network Pl. Chicago, IL 60673-1293
p. (866) 303-7344
e. CleanEarth-ESOLAR@cleanearthinc.com

ATTN.: REX NELSON JR.
B G GRADING, LLC.
3702 89TH ST E
PALMETTO, FL 34221-8734

SITE ADDRESS:
CITY OF BRADENTON
707 2ND ST W
BRADENTON, FL 34205

ORDER 5986104 City of Bradenton

11/07/2025

Transportation Stop Charges :

	THIRD PARTY TRANSPORTATION, COST PLUS-ROLL OFF- PER TON	28.83 @ 40.000 / E	$1,153.20
11/07/2025	Doc No. 264734-25 Manifest 417360FL-48 Waste Receipt		
1	417360FL-00 - (WM-OKEECHOBEE LANDFILL) SOIL	28.83 @ 57.000 / P	$1,643.31

Sub Total	$2,796.51
Energy & Insurance	$503.38
INVOICE TOTAL	$3,299.89

DIRECT INQUIRES TO: ESOL Customer Experience Inquiries_eso@cleanearthinc.com

NDC Construction Company
1001 3rd Ave West Suite 600
Bradenton, FL 34205
Ph : 941-747-1062

Change Request

To: Jean Totti
City of Bradenton
101 Old Main Street
Bradenton, FL 34205
Ph: (941)462-1999

Number: 86
Date: 12/18/2025
Job: 00587 Bradenton Police Dept HQ
Phone:
Date Sent: 1/13/2026

Description: Low Voltage Changes

We are pleased to offer the following specifications and pricing to make the following changes:

In the process of reviewing the audio/video shop drawing and product data submittals, there were a few meetings with COB IT and PD representatives. In these meetings several changes and adjustments were made to simplify the system. There were also a few other low voltage adjustments made in the officers hub and interview rooms. Please see the attached exhibit A for a breakout of all changes.

This is a VE item and is presented as a zero dollar change request. The $21,287 of savings is being applied against the $300,000 future VE included in the GMP.

It is not the intent of NDC to certify all costs related to this change. NDC reserves its right to time extension, impact costs, direct and indirect costs not listed herein that may be unforeseen of the result of the cumulative effect this change may have. At this time, there is a potential time impact of 0 days.

Please return this Change Request at your earliest convenience as NDC is proceeding with this revision as per earlier direction.

The total direct cost to perform this work is ..... (Please refer to attached sheet for details.)	$0.00
Total:	**$0.00**

If you have any questions, please contact me at (941)747-1062.

Submitted by: Madison Bittner
NDC Construction Company

Approved by: _____
Date: 1/29/26

Chiefs Conference Room

(-1) Crestron UC-MX50-U (Medium Room Tabletop Video Conferencing System)
(-1) Crestron AM-3200-GV (Wireless Presentation Receiver)
(-1) Crestron MPC3-102-B (Media Presentation Controller for AV Systems)
(-1) Crestron MPC3-101/102/201-RMB (Retrofit Mounting Bracket for MPC3-201-B)
(-1) Chief XSM1U X-Large Micro-Adjust Fixed TV Wall Mount
(-1) LG 55UR640S9UD 55" UHD Commercial LED TV
(-1) Crestron AMP-X75 75W X-Series Power Amplifier
(-2) AtlasIED FAP63T-W 6" 2-Way Ceiling Speaker System White

Detective Conference

(-1) Crestron UC-MX50-U (Medium Room Tabletop Video Conferencing System)
(-1) Crestron AM-3200-GV (Wireless Presentation Receiver)
(-1) Crestron MPC3-102-B (Media Presentation Controller for AV Systems)
(-1) Crestron MPC3-101/102/201-RMB (Retrofit Mounting Bracket for MPC3-201-B)
(-1) Chief XSM1U X-Large Micro-Adjust Fixed TV Wall Mount
(-1) LG 55UR640S9UD 55" UHD Commercial LED TV
(-1) Crestron AMP-X75 75W X-Series Power Amplifier
(-2) AtlasIED FAP63T-W 6" 2-Way Ceiling Speaker System White

Real Time Crime

(-2) Chief XSM1U (X-Large Micro-Adjust Fixed TV Wall Mount)
(-1) Crestron HD-MD4X2-4KZ-E (4x2 4K HDR AV Switcher)
(-1) Crestron AMP-X300 (300W 4-Channel X Series Audio Amplifier)
(-2) AtlasIED FAP63T-W (6" 2-Way Ceiling Speaker System White)
(-1) Crestron MPC3-102-B (Media Presentation Controller for AV Systems)
(-1) Crestron MPC3-101/102/201-RMB (Retrofit Mounting Bracket for MPC3-201-B)
(2) Chief TS318SU (18" Dual Swing Arm Wall Mount)
(1) Move Four Existing Screens from old HQ to New HQ
(6) Crestron HD-TXC-4KZ-101-1G-W (4K60 HDMI Signal Transmitter, Wall Plate, White)
(6) Crestron HD-RXC-4KZ-101 (4K60 HDMI Control Signal Receiver for CATx Extension)
(6) Binary B6-4K2-3 (10 ft B6 Series 4K HDMI Cable)
(6) Binary B6-4K2-1 (3.3 ft B6 Series 4K HDMI Cable)

Hyper wall layout consists of two hyper monitors positioned above and two below. One television will be added to each side of the hyper wall, resulting in a total of two televisions, which will require data connections. Inner desk one cable will be reassigned; outer 2 desk 2 cables will be reassigned for control lines to monitors. These drops are no cost for bright solutions.

Interview Rooms A, B &C

(-3) LG 43UR640S9UD (43" UHD Commercial LED TV)
(-3) Chief MSM1U (Micro-Adjustable Fixed TV Wall Mount)

Data Relocation: In the viewing room, relocate the data drops to the opposite wall for the touch pads (one data drop each touch pad at 53" AFF bottom face plate, data & power required). One data drop is required for the Axis controller above ceiling, with the final location to be coordinated. These drops are no cost for bright solutions.

Officer Hub

Provide two data drops at each location, one drop per dock equipment. Officer Hub 1052 and Officer Hub 2032, run cabling to the nearest IDF room. There are 4 additional drops in total.

Bright Solutions

CCN #	**AV Changes**
Date:	12/29/2025
Project Name:	Bradenton Police HQ
Project Number:	Bradenton Police HQ
Page Number:	1

Client Address:

NDC
705 Third St. W.
Bradenton, FL 34205

Work Description

We reserve the right to correct this quote for errors and omissions.

Briefing Room

(-1) Crestron HD-MD4X2-4KZ-E (4x2 4K HDR AV Switcher)
(-1) Crestron MPC3-102-B (Media Presentation Controller for AV Systems)
(-1) Crestron MPC3-101/102/201-RMB (Retrofit Mounting Bracket for MPC3-201-B)
(-2) Binary B6-4K2-7.5 (25 ft B6 Series 4K HDMI Cable)

(1) Crestron HD-DA2-4KZ-E (1:2 HDMI Distribution Amplifier w/4K60 4:4:4 & HDR Support)
(1) Binary B6-4K2-1 (Binary B6 Series 4K Ultra HD Premium Certified High Speed HDMI Cable withGripTek- 1m (3.3 ft)
(1) Binary B3-StereoMini-2 (6.5 ft 3.5mm Stereo Cable B3 Series)

Fitness Center

(-4) AtlasIED FAP63T-W (6" 2-Way Ceiling Speaker System White)
(-1) Crestron AMP-X75 (75W X-Series Power Amplifier)
(-1) Sonos Sonos-Port (WiFi Audio Streaming Component)

(4) Crestron SAROS IC8T-W-T-EACH (SarosÂ® 8â 2-Way In-Ceiling Speaker, White Textured, Single)
(2) Crestron SAROS ICS8T-W-T-EACH (8" In-Ceiling Subwoofer Speaker)
(1) Crestron AMP-X500 (500W X-Series Audio Amplifier)
(1) Radio Design Labs DS-BT1A (Wall-Mount Bluetooth Audio Interface Stainless)
(1) Radio Design Labs TXTPR1A (Active Single-Pair Audio Receiver)
(1) Radio Design Labs PS-24V3A (24V 3A Switching Power Supply Adapter)
(.5) Wirepath NST-162-PL-1000-WH (16-Gauge 2-Conductor 1000 ft Plenum Speaker Wire (White)
(1) Binary B3-StereoMini-2 (6.5 ft 3.5mm Stereo Cable B3 Series)
(1) Crestron SPKA-ST-15 (Speaker Safety Tether Kit (10 Sets)

Public Interview LG

Bright Solutions

Client Address:

NDC
705 Third St. W.
Bradenton, FL 34205

CCN #	**AV Changes**
Date:	12/29/2025
Project Name:	Bradenton Police HQ
Project Number:	Bradenton Police HQ
Page Number:	3

Interview Rooms A,B &C

(-3) LG 43UR640S9UD (43" UHD Commercial LED TV)
(-3) Chief MSM1U (Micro-Adjustable Fixed TV Wall Mount)

Final Amount **$-22,405.00**

CLIENT ACCEPTANCE

CCN #	**AV Changes**
Final Amount:	**$-22,405.00**

Name: _____

Date: _____

Signature: _____

Change Order #: _____

I hereby accept this quotation and authorize the contractor to complete the above described work.

NDC Construction Company
1001 3rd Ave West Suite 600
Bradenton, FL 34205
Ph : 941-747-1062

Change Request

To: Jean Totti
City of Bradenton
101 Old Main Street
Bradenton, FL 34205
Ph: (941)462-1999

Number: 89
Date: 1/21/2026
Job: 00587 Bradenton Police Dept HQ
Phone:
Date Sent: 1/21/2026

Description: Light Pole Bases

We are pleased to offer the following specifications and pricing to make the following changes:

Provide material, labor, and equipment to install 3 light pole bases in the public parking area and 2 in the courtyard per the lightpole foundation detail provided in RFI 260.

An allowance of $3,500 was carried by our subcontractor for an inground installation. This was applied towards the concrete light pole bases per RFI 260.

It is not the intent of NDC to certify all costs related to this change. NDC reserves its right to time extension, impact costs, direct and indirect costs not listed herein that may be unforseen of the result of the cumulative effect this change may have. At this time, there is a potential time impact of 0 days.

Please return this Change Request at your earliest convenience as NDC is not proceeding with this revision until an acknowledgment is received.

The total direct cost to perform this work is ..... (Please refer to attached sheet for details.)	$7,781.90
Total:	**$7,781.90**

If you have any questions, please contact me at (941)747-1062.

Submitted by: Madison Bittner
NDC Construction Company

Approved by: _____
Date: 1/09/24

NDC Construction Company
1001 3rd Ave West Suite 600
Bradenton, FL 34205
Ph : 941-747-1062

Change Request 89 Price Breakdown
Continuation Sheet

Description: Light Pole Bases

Description	Labor	Material	Equipment	Subcontract	Other	Price
Provide material, labor, and equipment to install 3 light pole bases in the public parking area and 2 in the courtyard per the lightpole foundation detail provided in RFI 260.				$7,110.00		$7,110.00
GC Markup (2.1%)		$149.31				$149.31
SDI Markup (1.45%)		$103.10				$103.10
Bond Markup (0.90%)		$63.99				$63.99
Fee Markup (5%)		$355.50				$355.50
					Subtotal:	**$7,781.90**

RFI #260

NDC Construction Company
1001 3rd Avenue West Suite 600
Bradenton, Florida 34205
Phone: +19417471062

Project: 00587 - Bradenton Police Department HQ
255 6th Ave West
Bradenton, Florida 34205

Public Parking Light Pole Reinforcing Detail

TO:	Andrew Carr **(AECOM)** *(Response Required)* John Dietz **(AECOM)** *(Response Required)* Vincent Vaccarello-Wadehra **(AECOM)** *(Response Required)*	**FROM:**	Madison Bittner **(NDC Construction Company)**
		STATUS:	Closed on 11/25/25
DATE INITIATED:	11/19/2025	**DUE DATE:**	11/26/2025
LOCATION:		**SCHEDULE IMPACT:**	No
PROJECT STAGE:	Course of Construction	**SPEC SECTION:**	
COST IMPACT:	TBD		
LINKED DRAWINGS:	E504		

COPIES TO:
Madison Bittner **(NDC Construction Company)**, Joshua A Butnor **(NDC Construction Company)**, Chris Gray **(NDC Construction Company)**, Greg Hodge **(NDC Construction Company)**, Karen Lanke **(Bradenton Police Department)**, Scott MacDonald **(Bradenton Police Department)**, Rob Perry **(City of Bradenton)**, Brian Thiers **(Bradenton Police Department)**, Jean Totti **(City of Bradenton)**, Lance Williams **(City of Bradenton)**

Question from Madison Bittner (NDC Construction Company) at 01:45 PM on 11/19/2025

Please provide the reinforcement detail for the public parking light poles referenced on E504/1. Attached are the detail and light pole cut sheets.

Attachments:
RFI 260 - Public Parking Light Pole Reinforcing Detail.pdf

Official Response: **Vincent Vaccarello-Wadehra (AECOM)** *responded on Tuesday, November 25th, 2025 at 10:43AM EST*

See attached for the requested foundation detail for the public parking light poles.

Attachments:
S-SK-5 POLE FOUNDATION SKETCH.pdf

Additionally, you are directed to provide this office with written notice (if any) within five (5) calendar days of this RFP's date if the above clarification(s) has affected or will affect costs with respect to your original Scope of Work. No claims for additional cost(s) associated with the above information will be accepted unless so made. Change proposals must be submitted within seven (7) calendar days of this RFP's date, including all appropriate backup as required by Article 11.A of the Subcontract Agreement General Conditions by and the Contract Documents.

The Architect/Engineer and/or Owner has issued the attached clarification which further defines and clarifies the "Work". Accordingly, this is our directive for you to proceed unless there is cost impact or otherwise stated in accordance with the following.

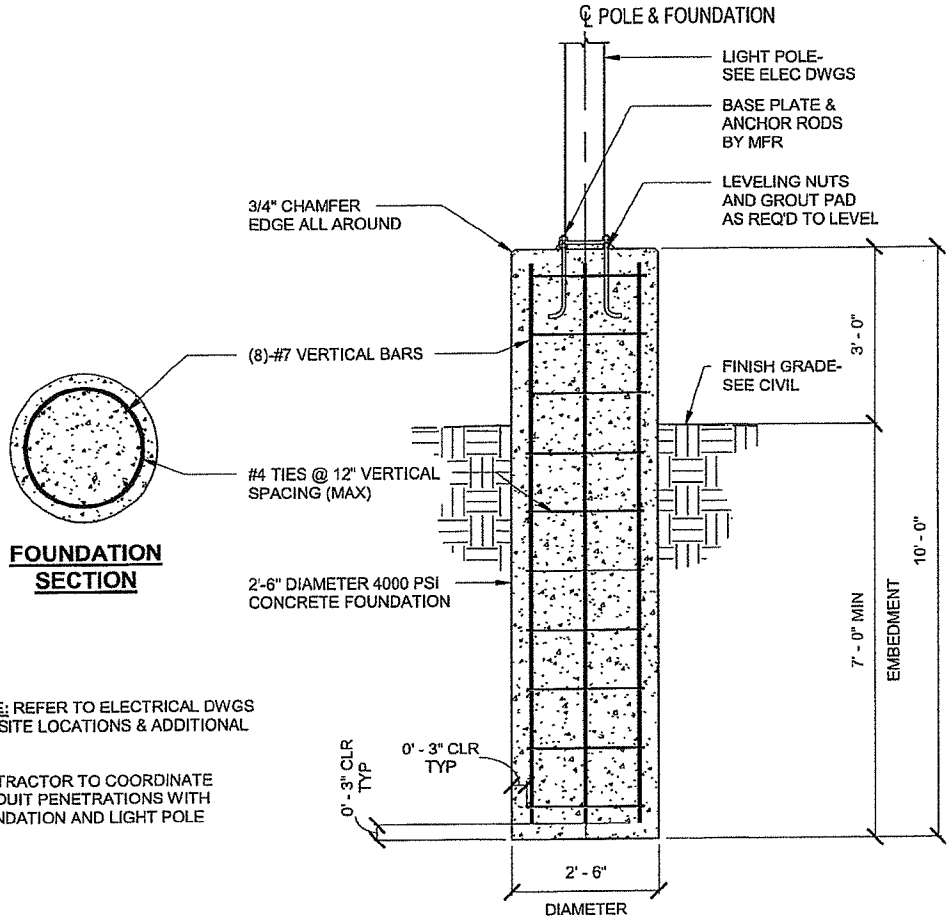

FOUNDATION SECTION

NOTE: REFER TO ELECTRICAL DWGS FOR SITE LOCATIONS & ADDITIONAL INFO

CONTRACTOR TO COORDINATE CONDUIT PENETRATIONS WITH FOUNDATION AND LIGHT POLE

1 S-SK-5 **EXTERIOR LIGHT POLE FOUNDATION DETAIL**

Scale: 1/2" = 1'-0"

Last Plotted: 11/25/2025 10:40:53 AM Project Management Initials:
Filename: Autodesk Docs://BP-AMER (USA) 60697269-Bradenton Police Headquarters/60697269_BPH_STRUC_R23.rvt Designer: VVW Checked: SH Approved: SH ANSI B 11"x17"

Printed on ___% Post-Consumer Recycled Content Paper

This drawing has been prepared for the use of AECOM's client and may not be used, reproduced or relied upon by third parties, except as agreed by AECOM and its client, as required by law or for use by governmental reviewing agencies. AECOM accepts no responsibility, and denies any liability whatsoever, to any party that modifies this drawing without AECOM's express written consent. Do not scale this drawing. All measurements must be obtained from the stated dimensions.

©2023 AECOM Corporation

AECOM

PROJECT

BRADENTON POLICE HEADQUARTERS STRUCTURAL

CORNER OF 6TH AVENUE WEST AND 3RD STREET WEST
BRADENTON, FL 34205

CLIENT

THE CITY OF BRADENTON PUBLIC WORKS AND UTILITIES DEPARTMENT

1411 9TH STREET WEST,
BRADENTON, FL 34205
http://www.aecom.com

CONSULTANTS

AECOM

REGISTRATION

ISSUE/REVISION

1	25-11-25	RFI 260
I/R	DATE	DESCRIPTION

PROJECT NUMBER

60697269

SHEET TITLE

RFI 260 POLE FOUNDATION

SHEET NUMBER

S-SK-5

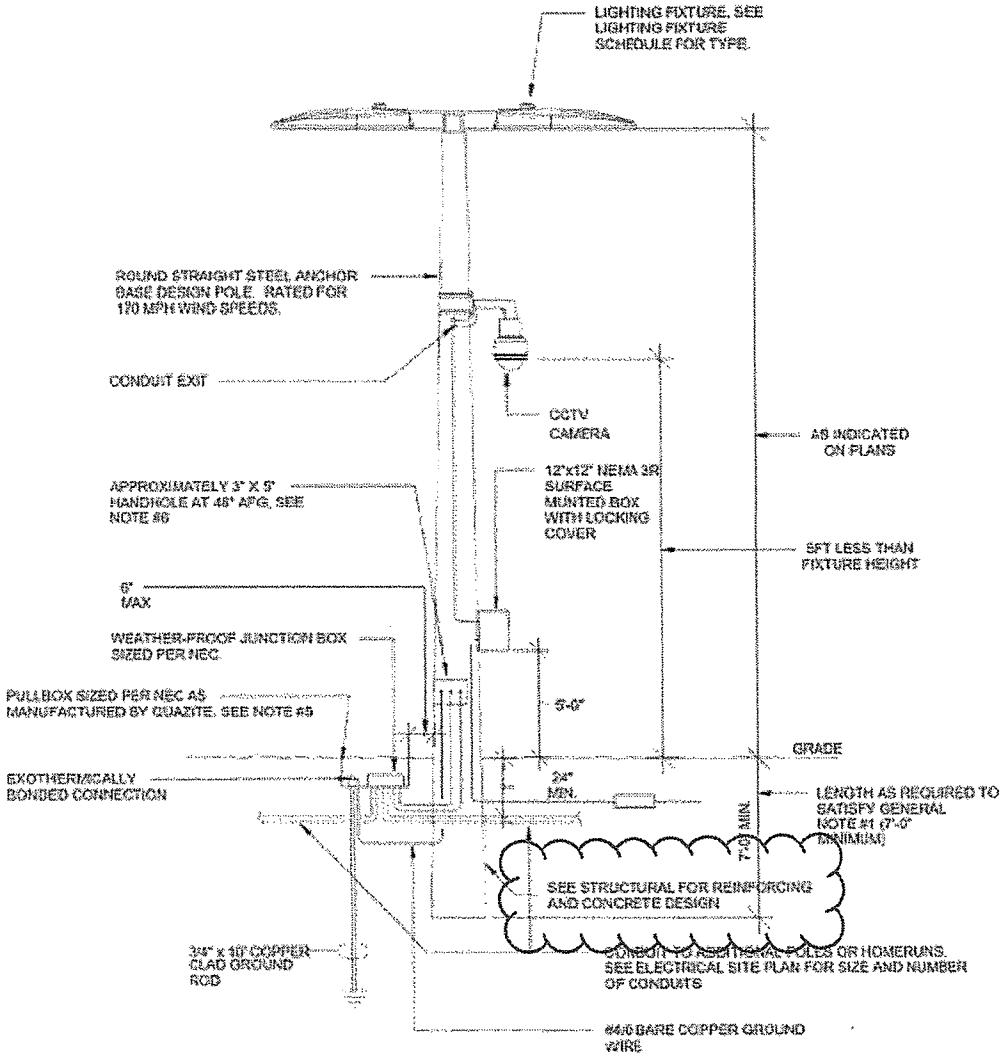

GENERAL NOTES:

1. CONTRACTOR TO SUBMIT DESIGN WIND LOAD CALCULATIONS CERTIFYING CONFORMANCE OF POLE ASSEMBLY AS DICTATED BY THE FLORIDA BUILDING CODE. EACH CALCULATION SHALL BE SIGNED AND SEALED BY A STATE OF FLORIDA LICENSED STRUCTURAL ENGINEER.
2. FURNISH AND INSTALL BUSSMAN "TRON" TYPE "HEB" IN-LINE WATERPROOF FUSE HOLDERS. FUSE WITH BUSSMAN TYPE "TRM" FUSES, FUSED AT 1.0A. LOCATE FUSES IN POLE HAND HOLE.
3. COORDINATE ALL WORK WITH CIVIL AND LANDSCAPE SITE PLANS.
4. POLES SHALL BE FACTORY EQUIPPED WITH GROUNDING STUDS. EQUIPMENT GROUNDING CONDUCTOR SHALL BE BONDED TO THE GROUND STUD.
5. PULLBOX MANUFACTURED BY QUAZITE W/15,000 LBS DESIGN LOAD TO HAVE HEAVY-DUTY COPOLYMER FULL D.O.T. TRAFFIC-RATED HANDHOLE WITH COVER (COVER TO READ "ELECTRICAL"). FURNISH AND INSTALL GRAVEL (1FT.) IN BOTTOM OF PULLBOX FOR DRAINAGE IN ACCORDANCE WITH MANUFACTURER'S INSTRUCTIONS.
6. ROUTE CONDUIT CONTINUOUS THRU POLE ASSEMBLY AND TERMINATE WITH INSULATION BUSHING AT HAND-HOLE WINDOW.
7. PROVIDE MINIMUM (1) 3/4" CONDUIT INSIDE POLE FOR CCTV CABLING. CONDUIT SHALL EXTEND FROM BOTTOM OF POLE TO SURFACE MOUNTED BOX, AND FROM SURFACE MOUNTED BOX TO WITHIN 5'-0" OF TOP OF POLE.
8. ALL SITE LIGHTING POLES SHALL HAVE PROVISIONS FOR CCTV CAMER CONDUITS. REFER TO IT & SECURITY SHEET [illegible] FOR POLES THAT WILL HAVE CCTV CAMERAS INSTALLED

1 / E504

SITE LIGHTING POLE DETAIL

Scale: NTS

Submitted by Tampa Bay Lighting, Inc.		Catalog Number:	Type:
Tampa Bay Lighting,	Job Name: BRADENTON POLICE HEADQUARTERS	R-2000-60605S4-P2-POLYSTER POWDER COLOR Notes:	PE2-POLE TBL25-90917

valmont STRUCTURES

16' to 30' ROUND NON-TAPERED ALUMINUM
4-Bolt Anchor Base

Job Name:	Client Name:
Job Location - City: State:	Created By: Date:
Product: Quote:	Customer Approval: Date:

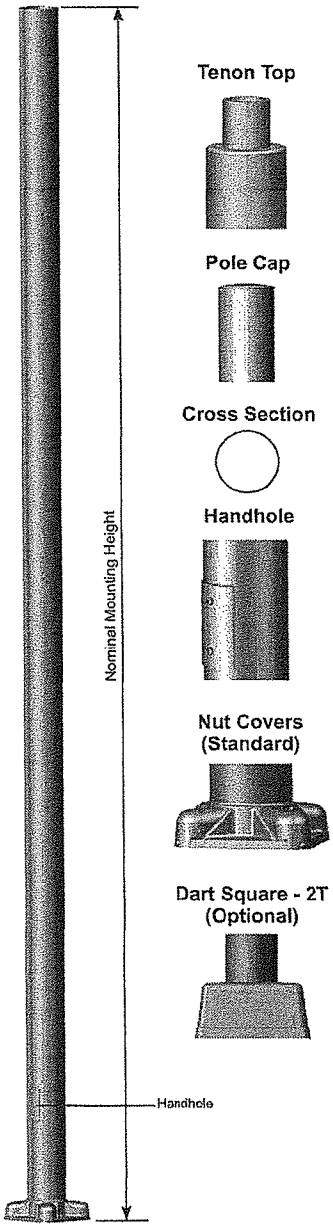

Tenon Top

Pole Cap

Cross Section

Handhole

Nut Covers (Standard)

Dart Square - 2T (Optional)

SPECIFICATIONS

Pole - The pole shaft is extruded from seamless alloy aluminum.

Pole Top - A pole top tenon is provided for top mount luminaire and/or bracket. A removable pole cap is available for poles receiving drilling patterns for side-mount luminaire arm assemblies.

Handhole - A covered handhole with hardware and grounding provision are provided.

Base Cover - Optional Dart Square-2T cast and decorative base covers available as special order.

Anchor Base - The anchor base is cast from 356 alloy aluminum. The completed assembly is heat-treated to a T6 temper. Aluminum nut covers are included with anchor base unless otherwise specified.

Anchor Bolts - Anchor bolts conform to ASTM F1554 Grade 55 and are provided with two hex nuts and two flat washers. Bolts have an "L" bend on one end and are galvanized a minimum of 12" on the threaded end.

Finish - The standard finish for the pole assembly and components is satin brushed, natural anodize, duranodic or polyester powder applied coating in accordance with Valmont's Specifications. Additional finish options available upon request.

Design Criteria - Please reference Design Criteria Specification for appropriate design conditions.

Submitted by Tampa Bay Lighting, Inc.		Catalog Number:	Type:
Tampa Bay Lighting,	Job Name: BRADENTON POLICE HEADQUARTERS	R-2000-60605S4-P2-POLYSTER POWDER COLOR Notes:	PE2-POLE TBL25-90917

Poles - Aluminum | RNTA / 4-Bolt Anchor Base | 16' to 30'

16' to 30' ROUND NON-TAPERED ALUMINUM
4-Bolt Anchor Base

valmont STRUCTURES

Job Name:		Client Name:	
Job Location - City:	State:	Created By:	Date:
Product:	Quote:	Customer Approval:	Date:

ANCHORAGE DATA

POLE		BASE PLATE				ANCHOR BOLTS		
BASE OD (IN)	WALL THK (IN)	BOLT CIRCLE DIA (IN)	BOLT CIRCLE ± (IN)	SQUARE (IN)	THK (IN)	DIA x LENGTH x HOOK (IN)	PROJECTION (IN)	± (IN)
4.00	0.125	7.50	0.75	8.91	0.630	0.75 x 17.00 x 3.00	3.25	N/A
4.50	0.125	7.84	0.76	9.26	0.630	0.75 x 17.00 x 3.00	3.25	N/A
4.50	0.188	7.84	0.76	9.26	0.630	0.75 x 17.00 x 3.00	3.25	N/A
5.00	0.125	8.63	0.86	9.61	0.630	0.75 x 17.00 x 3.00	3.25	N/A
5.00	0.156	8.63	0.86	9.61	0.630	0.75 x 17.00 x 3.00	3.25	N/A
5.00	0.188	8.63	0.86	9.61	0.630	0.75 x 17.00 x 3.00	3.25	N/A
6.00	0.156	9.50	0.75	10.32	0.630	0.75 x 17.00 x 3.00	3.50	N/A
6.00	0.188	9.50	0.75	10.32	0.630	0.75 x 17.00 x 3.00	3.50	N/A

Anchor Base Detail

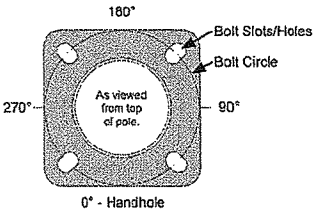

LOAD AND DIMENSIONAL DATA

DESIGN INFORMATION										POLE DIMENSIONS					
	70 MPH w/1.3 GUST		80 MPH w/1.3 GUST		90 MPH w/1.3 GUST		100 MPH w/1.3 GUST		110 MPH w/1.3 GUST						
NOMINAL MOUNTING HEIGHT	MAX EPA, (SQ FT)	MAX WEIGHT (LBS)	MAX EPA, (SQ FT)	MAX WEIGHT (LBS)	MAX EPA, (SQ FT)	MAX WEIGHT (LBS)	MAX EPA, (SQ FT)	MAX WEIGHT (LBS)	MAX EPA, (SQ FT)	MAX WEIGHT (LBS)	POLE HEIGHT	BASE OD (IN)	TOP OD (IN)	WALL THK (IN)	STRUTURE WEIGHT, (LBS)	MODEL NUMBER
16'-0"	3.2	100	1.9	100	1.0	100	0.5	100	0.2	100	16'-0"	4.00	4.00	0.125	33	160040404S4
	5.1	100	3.3	100	2.2	100	1.6	100	1.2	100	16'-0"	4.50	4.50	0.125	37	160045454S4
	8.7	100	6.0	100	4.3	100	3.4	100	2.6	100	16'-0"	4.50	4.50	0.188	53	160045456S4
	7.4	100	5.1	100	3.8	100	3.0	100	2.3	100	16'-0"	5.00	5.00	0.125	41	160050504S4
	9.8	100	6.9	100	5.3	100	4.1	100	3.3	100	16'-0"	5.00	5.00	0.156	50	160050505S4
	12.2	100	8.7	100	6.7	100	5.3	100	4.2	100	16'-0"	5.00	5.00	0.188	59	160050506S4
	17.9	100	13.5	100	10.5	100	8.3	100	6.8	100	16'-0"	6.00	6.00	0.156	59	160060605S4
	21.9	100	16.5	100	12.8	100	10.3	100	8.4	100	16'-0"	6.00	6.00	0.188	70	160060606S4
18'-0"	6.7	100	4.5	100	3.1	100	2.3	100	1.8	100	18'-0"	4.50	4.50	0.188	59	180045456S4
	5.6	100	3.7	100	2.7	100	2.0	100	1.5	100	18'-0"	5.00	5.00	0.125	45	180050504S4
	7.7	100	5.2	100	3.9	100	3.0	100	2.3	100	18'-0"	5.00	5.00	0.156	55	180050505S4
	9.7	100	6.8	100	5.1	100	4.0	100	3.1	100	18'-0"	5.00	5.00	0.188	65	180050506S4
	18.0	100	13.5	100	10.5	100	8.3	100	6.7	100	18'-0"	6.00	6.00	0.188	78	180060606S4
20'-0"	5.1	100	3.2	100	2.0	100	1.4	100	1.0	100	20'-0"	4.50	4.50	0.188	64	200045456S4
	4.1	100	2.4	100	1.7	100	1.2	100	0.8	100	20'-0"	5.00	5.00	0.125	50	200050504S4
	5.9	100	3.8	100	2.6	100	2.0	100	1.5	100	20'-0"	5.00	5.00	0.156	61	200050505S4
	7.6	100	5.2	100	3.8	100	2.9	100	2.2	100	20'-0"	5.00	5.00	0.188	72	200050506S4
	11.9	100	8.8	100	6.7	100	5.3	100	4.2	100	20'-0"	6.00	6.00	0.156	73	200060605S4
	14.9	100	11.1	100	8.5	100	6.7	100	5.4	100	20'-0"	6.00	6.00	0.188	86	200060606S4
25'-0"	2.1	100	0.6	100	0.0	100	0.0	100	0.0	100	25'-0"	4.50	4.50	0.188	79	+250045456S4
	6.9	100	4.9	100	3.6	100	2.7	100	2.0	100	25'-0"	6.00	6.00	0.156	90	+250060605S4
	9.1	100	6.6	100	4.9	100	3.8	100	2.9	100	25'-0"	6.00	6.00	0.188	106	250060606S4
30'-0"	5.0	100	3.4	100	2.3	100	1.6	100	1.1	100	30'-0"	6.00	6.00	0.188	127	+300060606S4

1. EPA represents the Effective Projected Area of each luminaire. Designs are limited to top mount or side-mount luminaires. Variations from sizes above are available upon inquiry at the factory. Satisfactory performance of poles is dependent upon the pole being properly attached to a supporting foundation of adequate design.
2. Structure weight is a nominal value which includes the pole shaft and base plate.
   + Pole includes factory installed vibration damper.

PRODUCT ORDERING CODES

POLYSTER POWDER COLOR

CROSS SECTION	MODEL NUMBER		FIXTURE MOUNTING	COLOR		OPTIONS
R						
R = Round	160040404S4	200050505S4	**Drill Mounting** D1 = 1 Luminaire D2 = 2 @ 180° D3 = 3 @ 120° D4 = 4 @ 90° D5 = 2 @ 90° D6 = 3 @ 90°	**Polyester Powder** DWH = White DSS = Sandstone BR = Burgundy HG = Hunter Green DNA = Natural Aluminum DCG = Charcoal Gray DMB = Medium Bronze SBN = Sanded Brown DNB = New Dark Bronze DDB = Dark Bronze SBK = Sanded Black DBL = Black DSB = Steel Blue DTG = Dark Green DBR = Red SC = Special Color (Contact Factory)	**Anodized** 204 = Clear Natural 311 = Light Bronze* 312 = Medium Bronze* 313 = Dark Bronze* 335 = Black* *Duranodic Anodize **Brushed** SBF = Satin Brushed	See Accessories at valmontstructures.com (Please Specify with Code)
	160045454S4	200060605S4				
	160045456S4	200060606S4				
	160050504S4	+250045456S4				
	160050505S4	+250060605S4				
	160050506S4	250060606S4				
	160060605S4	+300060606S4				
	160060606S4					
	180045456S4					
	180050504S4					
	180050505S4					
	180050506S4					
	180060606S4					
	200045456S4					
	200050504S4					
	200050505S4					

Tenon Mounting
P2 = 2.38" OD x 4.00"
P3 = 3.50" OD x 6.00"
P4 = 4.00" OD x 6.00"
P5 = 2.88" OD x 4.00"
P7 = 2.38" OD x 5.00"
PQ = 2.38" OD x 12.00"
PD = 3.00" OD x 3.00"
-- = Plain Top
P9 = Other Tenon (Contact Factory)

SPC7545 06/13 valmontstructures.com carries the most current spec information and supersedes these guidelines.

PER FBC 2023,
POLE MEETS 170MPH REQUIREMENT

BrightFuture ELECTRIC

CHANGE NOTICE

CCN #	**COR-12 POLE BASES**
Date:	1/16/2026
Project Name:	Bradeton Police HQ
Project Number:	3324063
Page Number:	1

Client Address:

NDC Construction
1001 3rd Ave W #600
Bradenton, Florida 34205

Work Description

We reserve the right to correct this quote for errors and omissions.
This quote covers direct costs only and we reserve the right to claim for impact and consequential costs.
This price is good for acceptance within **10** days from the date of receipt.
We request a time extension of **3** days.
We will supply and install all materials, labor, and equipment as per your instructions on **CCN # COR-12 POLE BASES.**

COR-12 POLE BASES

Scope of Work:

Furnish and install 5 pole bases as specifed per RFI 260 detail.

Itemized Breakdown

Description	Qty	Total Mat.	Total Hrs.
ALLOWANCE CARRIED AT BID	-1	-3,500.00	-0.00
Totals	**-1**	**-3,500.00**	**0.00**

Summary

General Materials		-3,500.00
Total Material		**-3,500.00**
Overhead & Markup		-542.50
Subtotal		**-4,042.50**
POLE BASE INSTALL	($9,658.00 + 0.000 % + 10.000 % + 5.000 %)	11,154.99
Subtotal		**7,112.49**
Final Adjustment		-2.49
Final Amount		**$7,110.00**

ORIGINAL

CHANGE NOTICE

Client Address:

NDC Construction
1001 3rd Ave W #600
Bradenton, Florida 34205

CCN #	**COR-12 POLE BASES**
Date:	1/16/2026
Project Name:	Bradeton Police HQ
Project Number:	3324063
Page Number:	2

CONTRACTOR CERTIFICATION

Name: _____

Date: _____

Signature: _____
I hereby certify that this quotation is complete and accurate based on the information provided.

CLIENT ACCEPTANCE

CCN # **COR-12 POLE BASES**
Final Amount: **$7,110.00**

Name: _____

Date: _____

Signature: _____

Change Order #: _____
I hereby accept this quotation and authorize the contractor to complete the above described work.

ORIGINAL

APEX
UTILITY STRUCTURES

PROJECT INFORMATION

Police HQ
1411 9th Street W
Bradenton, FL

PROPOSAL DATE

1/9/2026

This Proposal is Good for 30 Days

DRAWINGS

N/A

PREPARED FOR

Sean Trask
Bright Future Electric
7011 15th Street East
Sarasota. FL 34243

PROJECT OVERVIEW

Proposal 2018 5 Bases Provided/Installed

PROJECT PRICING

(5) 24" x 10' Bases

TOTAL: $ 9,658

ADDITIONAL PRICING

Standby Labor Any delays or additional work will be charged per man per hour	**$100.00**
Standby Per Diem Any delays or additional work will be charged per man per night	**$200.00**
Standby Drill Rig Any delays or additional work will be charged per hour	**$300.00**

CLARIFICATION AND ASSUMPTIONS

1. The site will be prepared so that it is level, water-free and stable with material suitable for our equipment and concrete trucks to operate on, with all necessary ramps and slopes in place above all projecting reinforcing to allow for safe operation of our equipment. We have assumed that we will be installing drilled shafts from grade elevation. (Note: *onsite mobilization is defined as a mobilization that consists of moving our equipment from one area to the next without having to completely demobilize from the job site*).
2. Poles/Bases will be installed in accordance with normal industry practice and in accordance with current Specifications.
3. Any required surveying, including location centers, elevations, reference points, and as-builts will be provided by others.
4. Any required traffic control, including MOT, will be provided by others.
5. **Staging**: We have assumed that sufficient 'laydown' areas for our equipment, tools, storage, and materials will be available for the duration of our work.
6. We have assumed that any water generated during drilled shaft installation will be disposed of on-site into the sewer system (if required.)

7. The above pricing is based on the current cost of construction materials. Such cost may change by the time of award or start of construction.
8. The above price includes mobilization. All work will be installed in one continuous operation, once our equipment has moved onto the site unless otherwise specified.
9. This proposal does not include special installation procedures that may be required or recommended to protect adjacent structures or utilities from earth movements, including those procedures imposed by local municipalities. If required, utilities will be relocated prior to our mobilization. If not, any relocation, or protection needed will be done by others.
10. We have assumed our work will not be affected or impeded in any manner by any other contractors. This includes and is not limited to any out of sequence work.
11. Obstructions, Downtime, Extra Work or Delays will be billed at our standby rates.
12. We can have a representative meet on site to discuss access and working conditions.
13. This proposal is based on working up to 10 hours/day Monday-Friday, excluding holidays.
14. Apex Utility Structures will not be responsible for any setting issues related to anchor bolts not fitting properly in the designed foundation.
15. Additional charges may apply if actual soil conditions differ from those indicated in the soil report.
16. Due to the unpredictable nature of underground voids, additional charges for time and materials may apply if loss of circulation is encountered during drilling.

INCLUSIONS AND EXCLUSIONS

We **INCLUDE** the following items:

1. Handle and stockpile drill spoils adjacent to our immediate work area, while our work is in progress for daily and offsite disposal by others.
2. All equipment, labor, and tools required for drilling and/or foundation installation.
3. One mobilization and one demobilization are included. Any required remobilizations will be an additional cost.
4. APEX UTILITY STRUCTURES will set up a standard underground locate ticket. APEX UTILITY STRUCTURES will not be responsible for locating utilities not registered with the standard locating service, or private utilities.
5. Spoils can be stockpiled on site at no cost.
6. Poles to be provided by others unless agreed upon during the bidding process.
7. All work is to be completed during normal business hours of 7:00am thru 3:30pm, Monday thru Friday, excluding Holidays.
8. Contractor to have personnel on site for any "important" decisions to be made.

We **EXCLUDE** the following items:

1. Working under low-overhead restrictions.
2. Detection, relocation, protection, underpinning and removal of all surface, overhead and underground obstructions (both natural and man-made) or utilities that interfere with our work. Drill rig delays will be charged at the hourly rate outlined herein
3. Underpinning or support of adjacent structures
4. General site preparation, maintenance, and restoration including all access roads.
5. All site excavation, exploratory work, and demolition of the work areas to facilitate installation of our work. This includes all necessary ramps and benches to allow safe access to the each work area.
6. Dedicated onsite safety manager, firewatch person or other non-productive personnel.
7. Restoration of sidewalks, curbs, pavement and grade surrounding project site.
8. Providing disposal containers for construction waste and portable toilets
9. Providing site security at all times that our personnel are not present at the site
10. ALL PPE greater than our crew wearing hard hats, gloves, steel toe boots, safety glasses, and high visibility vest
11. Providing street cleaning or tire wash station
12. SWPPP plans, silt fences, manhole covers, turbidity curtains, erosion control measures, dust control, wetland protection, or any other environmental measure such as placing hay bales, silt fences, etc.
13. Maintenance of traffic, traffic control, road closures, flagmen, barricades, or signs, etc..
14. Providing a concrete/grout washout container or area, maintenance of the washout container, and disposal
15. Provide necessary layout, elevation, and asbuilts required by project from benchmarks and baselines provided by others.
16. All monitoring, pre-construction and post-construction surveys, and vibration and /or settlement monitoring.
17. All engineering inspection, material testing, including installation records, sampling and testing, post-construction surveys and monitoring of adjacent structures and any special inspections required by the local, county and state agencies.
18. Furnishing, maintenance, and removal of all geotechnical and structural instrumentation.
19. Costs for Textura or online billing platforms
20. Sub-subcontracting any portion of our work to a MBE, WBE, DBE or SBE enterprise.
21. All permits, fees, easements, and permission of adjacent property owners that may be required for this work, except for those required for the transportation of our equipment and any state or local contractors' licenses.

22. Any provisions for the identification, personal protection of our employees and/or disposal of hazardous or contaminated materials should they be encountered during our operation. We reserve the right to stop our portion of the work until the site has been remediated by others.
23. Participation in liquidated damages.
24. Cost of a bond. If a bond is required, add 1.0% to our contract value.

CONDITIONS

1. **Payment Applications:** Pay applications will be submitted monthly based on work progress. Payment is due no more than 30 days after submittal. We will accept a maximum of 5% retention. Final payment, including retainage, is due 30 days after completion of our work.
2. **Pricing:** Due to volatility in the price of materials, this quote is valid for 10 days. Written acceptance of this proposal or a formal notice of intent to award must be sent to us within 10 days so we can hold pricing for 30 days. After 10 days, any change in the price of materials of more than 5% will require an adjustment to our price.
3. **Contract:** This proposal can be accepted as is. If you direct us to mobilize upon receipt of this proposal, that is "acceptance" and we have a contract under these terms.
4. **Back charges:** We will not accept any back charges or deducts or offsets for allegedly defective work unless we are notified and given the opportunity to cure before any corrective actions are taken by others.
5. **Differing Site Conditions:** We cannot assume any responsibility for subsurface or concealed conditions that differ from those indicated in the information we have been provided to date nor can we assume responsibility for unknown physical conditions of an unusual nature that differ materially from those ordinarily found or generally recognized as inherent in the work that we propose to undertake with this proposal. If the site proves to be materially different from anticipated or we are being asked to perform duties materially different than are set forth here, we will need to stop work and reassess.
6. **Liability: Due to the complexities and nature of our work,** we can assume no responsibility for the actions or negligence of others. We will take responsibility for all direct damages (this excludes liquidated and/or consequential damages) caused by our negligence or the negligence of our subcontractors or material suppliers and we will fix any defects in our work that we caused.
7. **Mobilization and Schedule: Both our equipment and our labor forces are highly specialized. If we mobilize, at your direction, and the schedule changes due to issues we cannot control, we must be able to seek an equitable adjustment of our price due to those schedule changes. We will be responsible for delays we may cause, but we cannot take responsibility for delays or acceleration we did not cause.**
8. **Access:** Our price is based upon having sufficient access to the work so we can perform the entire scope in a continuous and uninterrupted operation with no waiting and no more than one mobilization, working Monday through Friday. Our work will be performed in a methodical manner whereby we will proceed to the next most adjacent area. Returning to a previously worked area or a non-adjacent area due to restraints on work will be considered an out of sequence move. Those costs are not included in our price.
9. **Hazardous Materials:** If we encounter any hazardous materials or contaminated materials, we will stop work until the site has been remediated by others and will seek an equitable adjustment of our price - unless our scope of work explicitly includes the removal of such hazardous or contaminated materials.

All work to be completed in a professional manner according to standard Practices. Any alteration or deviation from above specifications involving extra costs will be executed only upon written orders and will become an extra charge over and above the estimate.

CONTACT INFORMATION

Grant Leonard
Apex Utility Structures
(941-812-8672) | Gleonard@apexusfl.com

NDC Construction Company
1001 3rd Ave West Suite 600
Bradenton, FL 34205
Ph : 941-747-1062

Change Request

To: Jean Totti
City of Bradenton
101 Old Main Street
Bradenton, FL 34205
Ph: (941)462-1999

Number: 90
Date: 1/21/2026
Job: 00587 Bradenton Police Dept HQ
Phone:
Date Sent: 1/21/2026

Description: Added Door Position Switches

We are pleased to offer the following specifications and pricing to make the following changes:

Provide material, labor, and equipment to install 8 door position switches per the PD's direction.
1017 - Plumbing Door (from Exterior by Water Tower)
1040 - IDF Room 1A
1042 - MPOE 1
1099 - IDF Room 1B
1100 - MPOE 2
1103B - Service Door leading into Garage (South side)
1108 - Door from Water Tower Side to Corridor near Locker Rooms
2017 Entry into Server Room

This is being presented as a zero dollar change request. The added cost of $1,284 will be deducted from the Access Control VE Savings of $179,689.52.

It is not the intent of NDC to certify all costs related to this change. NDC reserves its right to time extension, impact costs, direct and indirect costs not listed herein that may be unforseen of the result of the cumulative effect this change may have. At this time, there is a potential time impact of 0 days.

Please return this Change Request at your earliest convenience as NDC is proceeding with this revision as per earlier direction.

The total direct cost to perform this work is ..... (Please refer to attached sheet for details.)	$0.00
Total:	**$0.00**

If you have any questions, please contact me at (941)747-1062.

Submitted by: Madison Bittner
NDC Construction Company

Approved by: _____
Date: 1/29/24

NDC Construction Company
1001 3rd Ave West Suite 600
Bradenton, FL 34205
Ph : 941-747-1062

Change Request 90 Price Breakdown
Continuation Sheet

Description: Added Door Position Switches

Description	Labor	Material	Equipment	Subcontract	Other	Price
Provide material, labor, and equipment to install 8 door position switches per the PD's direction. 1017 - Plumbing Door (from Exterior by Water Tower) 1040 - IDF Room 1A 1042 - MPOE 1 1099 - IDF Room 1B 1100 - MPOE 2 1103B - Service Door leading into Garage (South side) 1108 - Door from Water Tower Side to Corridor near Locker Rooms 2017 Entry into Server Room				$1,284.00		$1,284.00
VE Commitment		$-1,284.00				$-1,284.00
					Subtotal:	**$0.00**

NDC Construction Company
1001 3rd Ave West Suite 600
Bradenton, FL 34205
Ph : 941-747-1062

Change Request

To: Jean Totti
City of Bradenton
101 Old Main Street
Bradenton, FL 34205
Ph: (941)462-1999

Number: 90.1
Date: 2/6/2026
Job: 00587 Bradenton Police Dept HQ
Phone:
Date Sent: 2/11/2026

Description: Additional Door Position Switches

We are pleased to offer the following specifications and pricing to make the following changes:

Provide material, labor, and equipment to install 56 door position switches. 8 DPS's were added in CR 90.1. This pricing is for the remaining access controlled doors so that all access controlled doors have them.

This is being presented as a zero dollar change request. The added cost of $7,704 will be deducted from the Access Control VE Savings of $292,666.49.

It is not the intent of NDC to certify all costs related to this change. NDC reserves its right to time extension, impact costs, direct and indirect costs not listed herein that may be unforeseen of the result of the cumulative effect this change may have. At this time, there is a potential time impact of 0 days.

Please return this Change Request at your earliest convenience as NDC is proceeding with this revision as per earlier direction.

The total direct cost to perform this work is ..... (Please refer to attached sheet for details.)	$0.00
Total:	**$0.00**

If you have any questions, please contact me at .

Submitted by:

Approved by:
Date: 2/23/24

EMPIRE
Computing & Consulting

Empire Computing and Consulting Inc
120 N Frederick Ave
Daytona Beach, FL 32114
386-253-6506 Fax: 386-253-6508

Quote #:	**21472**
Quote Date:	2/5/2026
Page:	1
Customer #:	954

Quoted To:
NDC Construction Company
1001 Third Avenue West
Suite 600
Bradenton, FL 34205

Valid Through: 3/7/2026

Phone: 941-747-1062	Cust PO:	Terms:
Reference: NDC C/O DPS	Ship Via: Ground	Salesperson: GLORIAB

Stock Code	Description	Quantity	Price	Extended
EMP-INSTALLATION	Installation of Verkada wired door position sensor. Includes sensor and install.	1.00	6,368.40	6,368.40
BR13-HW	BR13 Wired Recessed Door Contact, 5P (sold in packs of 5)	12.00	69.30	831.60

48 doors from approval meeting on 1/30 (8 doors already approved) for a total of 56. 5% markup on Verkada parts. Includes shipping and handling from Verkada.

SubTotal:	7,200.00
Tax:	504.00
Shipping:	0.00
Total:	7,704.00

EMPIRE
Computing & Consulting

Empire Computing and Consulting Inc
120 N Frederick Ave
Daytona Beach, FL 32114
386-253-6506 Fax: 386-253-6508

Quote #:	21401
Quote Date:	1/20/2026
Page:	1
Customer #:	954

Quoted To:
NDC Construction Company
1001 Third Avenue West
Suite 600
Bradenton, FL 34205

Valid Through: 2/19/2026

Phone: 941-747-1062	Cust PO:	Terms:
Reference: NDC C/O DPS	Ship Via: Ground	Salesperson: GLORIAB

Stock Code	Description	Quantity	Price	Extended
EMP-INSTALLATION	Installation of Verkada wired door position sensor. Includes sensor and install.	8.00	150.00	1,200.00

The PD would like to proceed with a DPS for the following 8 doors.

1017 - Plumbing Door (from Exterior by Water Tower)
1040 - IDF Room 1A
1042 - MPOE 1
1099 - IDF Room 1B
1100 - MPOE 2
1103B - Service Door leading into Garage (South side)
1108 - Door from Water Tower Side to Corridor near Locker Rooms
2017 – Entry into Server Room

SubTotal:	1,200.00
Tax:	84.00
Shipping:	0.00
Total:	1,284.00

NDC Construction Company
1001 3rd Ave West Suite 600
Bradenton, FL 34205
Ph : 941-747-1062

Change Request

To: Jean Totti
City of Bradenton
101 Old Main Street
Bradenton, FL 34205
Ph: (941)462-1999

Number: 92
Date: 2/11/2026
Job: 00587 Bradenton Police Dept HQ
Phone:
Date Sent: 2/11/2026

Description: SPEC Building Materials PO - 20261903 - Roof Materials

We are pleased to offer the following specifications and pricing to make the following changes:

Cost of Roofing Materials to be purchased directly from SPEC Building Materials by The City of Bradenton via The City of Bradenton Purchase Order #20261903 Dated 01/12/2026. Total material cost of $284,095.78.

Tax savings associated with the Roofing Materials to be purchased directly from SPEC Building Materials by The City of Bradenton via The City of Bradenton Purchase Order #20261903 Dated 01/12/2026.
Tax savings of $16,561.75 is being applied towards the predetermined $300k of tax savings.

The total direct cost to perform this work is ..... (Please refer to attached sheet for details.)	$-284,095.78
Total:	**$-284,095.78**

If you have any questions, please contact me at (941)747-1062.

Submitted by: Madison Bittner
NDC Construction Company

Approved by: _____
Date: 2/23/26

ORIGINAL

Purchase Order

Fiscal Year 2026

THIS NUMBER MUST APPEAR ON ALL INVOICES, PACKAGES AND SHIPPING PAPERS	
Purchase Order #	20261903 - 00

Delivery must be made within doors of specified destination.

BILL TO

Bradenton Public Works
888 13TH AVE E
BRADENTON, FL 34208
Email: pwpurchasing@bradentonfl.gov
Phone: 941-708-6300

VENDOR

SPEC BUILDING MATERIALS
2840 ROE LN
KANSAS CITY, KS 66103

SHIP TO

Bradenton Public Works
888 13TH AVE E
BRADENTON, FL 34208
Email: pwpurchasing@bradentonfl.gov
Phone: 941-708-6300

Vendor Phone Number	Vendor E-mail Address	Requisition Number	Delivery Reference
866-585-7785		2601971	Jean Totti

Date Ordered	Vendor Number	Date Required	Freight Method/Terms	Department/Location
01/12/2026	117294			ENGINEERING DIVISION

Item#	Description/PartNo	QTY	UOM	Unit Price	Extended Price
	DPO - SPEC Building Materials - BPDHQ The Above Purchase Order Number Must Appear On All Correspondence - Packing Sheets And Bills Of Lading				
1	DPO - SPEC Building Materials - BPDHQ GL Account: 308-50-52100-00000-0000-0000-0000-0000-563000 $284,095.78 ********** GL SUMMARY ********** 308-50-52100-00000-0000-0000-0000-0000-563000 $284,095.78	1.0		$284,095.78	$284,095.78

PO Total	$284,095.78

POBuyer Name

FINANCE COPY

evidence lockers
CR 93
(missed)

NDC Construction Company
1001 3rd Ave West Suite 600
Bradenton, FL 34205
Ph : 941-747-1062

Change Request

To: Jean Totti
City of Bradenton
101 Old Main Street
Bradenton, FL 34205
Ph: (941)462-1999

Number: 93
Date: 2/13/2026
Job: 00587 Bradenton Police Dept HQ
Phone:
Date Sent: 3/13/2026

Description: Property & Evidence Lockers

We are pleased to offer the following specifications and pricing to make the following changes:

Provide equipment, materials and labor for the Property and Evidence Lockers per the direction of the owner.

Property and evidence lockers were not a part of NDC's original scope for project.

A Direct Material Purchase Order will be issued for the lockers at which time NDC will issue the owner a deductive change order in the amount of $75,757.30. This will include a credit of $71,469.15 for materials and freight and $4,288.15 of tax savings.

It is not the intent of NDC to certify all costs related to this change. NDC reserves its right to time extension, impact costs, direct and indirect costs not listed herein that may be unforeseen of the result of the cumulative effect this change may have. At this time, there is a potential time impact of 0 days.

Please return this Change Request at your earliest convenience as NDC is proceeding with this revision as per earlier direction.

The total direct cost to perform this work is ..... (Please refer to attached sheet for details.)	$85,729.80
Total:	**$85,729.80**

If you have any questions, please contact me at 941-747-1062.

Submitted by: Greg Hodge
NDC Construction

Approved by: _____
Date: 3/25/26.

NDC Construction Company
1001 3rd Ave West Suite 600
Bradenton, FL 34205
Ph : 941-747-1062

Change Request 93 Price Breakdown
Continuation Sheet

Description: Property & Evidence Lockers

Description	Labor	Material	Equipment	Subcontract	Other	Price
Provide equipment, materials and labor to the Property and Evidence Lockers per the direction of the owner as specified in the contrat documnets.				$85,729.80		$85,729.80
					Subtotal:	**$85,729.80**

patterson·pope
SPACE MADE SIMPLE.

Proposal

Mailing Address:
PO BOX 790138
CHARLOTTE, NC 28206
See invoice for remit to address.

Quote #: Q-77906-1
Drawing Ver: 350870 1A Sourcewell
Date: 2/17//2026
Expires On: 5/16/2026

Install To
Scott MacDonald
Bradenton PD
705 3rd Street West
Bradenton, FL 34205
(941) 708-6273
scott.macdonald@bradentonpd.com

Bill To
City of Bradenton
Bradenton, FL 34205

SALESPERSON	EMAIL	DELIVERY METHOD	PAYMENT METHOD
Tom Kelly	tkelly@pattersonpope.com		Net 30 days

Dear Scott: We will provide six Spacesaver Pass-Through Evidence Lockers per our meetings and our drawing and elevations.
We are providing these lockers at our most favored pricing on the Sourcewell contract110923-SPC
Effective date: 12/21/2023 -12/29/2027

This turn key solutions includes freight, receiving, inside delivery, installation, and trash removal by Patterson Pope employee certified technicians.

Sub Total:	$80,830.00
Estimated Total Tax:	$4,899.80
Grand Total:	**$85,729.80**

If TAX EXEMPT - Please provide Tax Exemption Certificate along with Purchase Order or Signed Quote

INFO REGARDING STORAGE FEES: The customer acknowledges that they will be responsible for Storage Fees of $50 per pallet, per month, incurred 30 days after the ship date that are related to a delay in an installation date due to a customer's request or a site related project delay

Patterson Pope requires a purchase order (or signed quote) for each individual accepted quote.

Please provide sign off on final drawing(s). Indicate color choices on your PO.

Patterson Pope offers custom manufactured solutions to fit your unique space. For this reason no product can be ordered until a representative from Patterson Pope is able to field verify all dimensions.

Signature below indicates acceptance of this proposal and of the attached terms and conditions.

Signature: _____ **Effective Date:** ____/____/____

Name (Print): _____ **Title:** _____

Please sign and email to Tom Kelly at tkelly@pattersonpope.com.

THANK YOU FOR YOUR BUSINESS!

Contact: Tom Kelly
Ph # 813 960-4830
tkelly@pattersonpope.com
www.pattersonpope.com

Bradenton PD Evidence locker proposal pricing breakout
3-11-26
Evidence Lockers

Item	cost	tax	total with tax
material	$65,229.15	$3,913.75	$69,142.90
freight	$6,240.00	$374.40	$6,614.40
installation services	$9,660.85	$611.65	$9,972.50
Total investment			**$85,729.80**

$4,288.15 tax savings

$71,469.15 - ODP
9,972.50 install
4288.15 - tax savings
85,729.80

71,469.15
4288.15
75,757.30 total deduct from NDC

NDC Construction Company
1001 3rd Ave West Suite 600
Bradenton, FL 34205
Ph : 941-747-1062

Change Request

To: Jean Totti
City of Bradenton
101 Old Main Street
Bradenton, FL 34205
Ph: (941)462-1999

Number: 98
Date: 2/13/2026
Job: 00587 Bradenton Police Dept HQ
Phone:
Date Sent: 3/13/2026

Description: Trash Room Louver L-4

We are pleased to offer the following specifications and pricing to make the following changes:

Provide equipment, materials and labor to modify opening and install revised specified louver L-4 per the response to RFI 333.

It is not the intent of NDC to certify all costs related to this change. NDC reserves its right to time extension, impact costs, direct and indirect costs not listed herein that may be unforeseen of the result of the cumulative effect this change may have. At this time, there is a potential time impact of 0 days.

Please return this Change Request at your earliest convenience as NDC is proceeding with this revision as per earlier direction.

The total direct cost to perform this work is ..... (Please refer to attached sheet for details.)	$6,289.00
Total:	**$6,289.00**

If you have any questions, please contact me at 941-747-1062.

Submitted by: Greg Hodge
NDC Construction

Approved by: _____
Date: 4/2/26

NDC Construction Company
1001 3rd Ave West Suite 600
Bradenton, FL 34205
Ph : 941-747-1062

Change Request 98 Price Breakdown
Continuation Sheet

Description: Trash Room Louver L-4

Description	Labor	Material	Equipment	Subcontract	Other	Price
Provide equipment, materials and labor to modify opening for revised specified louver L-4 per the response to RFI 333.				$1,815.00		$1,815.00
Provide equipment, materials and labor to install revised specified louver L-4 per response to RFI 333.				$3,931.00		$3,931.00
2% Overhead		$120.67				$120.67
SDI		$83.32				$83.32
Bond		$51.71				$51.71
Fee		$287.30				$287.30
					Subtotal:	**$6,289.00**

Change Order Request

Contractor: NDC Construction Company | **CE: 009**

Project: Bradenton Police Headquarters | **3/13/2026**

Work Description
RFI#333 Louver Opening Change
Costs to sawcut/remove Louver Opening Change per RFI#333

Materials			
Description	**Quantity**	**Unit Cost**	**Total**
		Sales Tax @ 7.00%	
Material Total			

Equipment					
Description	**Units**	**Duration**		**Unit Cost**	**Total**
				Equip Tax @ 7.00%	
Equipment Total					

Subcontractor	
Description	**Total**
TruLine Coring & Cutting Tampa, Inc. Invoice No. F93737	$1,650.00
Subcontractor Total	**$1,650.00**

Labor			
Description	**Duration**	**Labor Rate**	**Total**
Superintendent	wks	$2,000.00 / wk	
Project Manager	hr	$118.00 / hr	
Carpenter Foreman	hr	$60.00 / hr	
Carpenter / Rodbusters	hr	$50.00 / hr	
Laborer	hr	$35.00 / hr	
Labor Total			

Subtotal Materials, Equipment, Subcontractor & Labor		**$1,650**
Overhead & Profit (Material, Equipment, and Subcontractor only)	10.00%	**$165**
Total		**$1,815**

6030 Black Dairy Rd ; Seffner, FL 33584
Phone 407-468-0313

True-Line Coring & Cutting Tampa, Inc

Accounting Office
120 W 72nd St, Suite 200
Kansas City, MO 64114-5702

Phone: (813) 885-4401
Fax: (813) 885-4812

Web: www.sawconcrete.com

Invoice #: F93737

Invoice Date: 03/11/2026
Our Ticket No: 123566
PO No:
Job/Req. No:
Quote No:
Terms: Net 30 Days
Due By: 04/10/2026

Cust ID: FBMC02

PO No:
Job Name: BRADENTON POLICE DEPARTMENT
255 6TH AVE
BRANDENTON, FL 34205

Bill To: B & M CONCRETE
6039 BLACK DAIRY RD
SEFFNER, FL 33584

Cust Add'l Info:

Qty	Dt of Srv WO No.	Service/Item	Description	Unit Price	Taxable	Total
1	03/09/2026	WALL SAW	1 EACH - 48" X 30" X 12" CONCRETE WALL SAW CUT AND DROP IN 1 PIECE REMOVAL OFF SITE BY B & M NO OVER CUTS IN AREAS TO REMAIN	1,650.00		$ 1,650.00

YOUR BUSINESS IS APPRECIATED. THANK YOU
PLEASE VISIT OUR WEBSITE @ www.sawconcrete.com

Nontaxable Subtotal	$ 1,650.00
Taxable Subtotal	$ 0.00
Tax (7.500%)	$ 0.00
Total Invoice	$ 1,650.00

Billing Office Email: ar@sawconcrete.com **Phone:** 816-523-2131

(Please detach and return remittance with payment)

B & M CONCRETE
6039 BLACK DAIRY RD
SEFFNER, FL 33584

Cust ID	Invoice Date	Invoice No	Invoice Amt	Paid / Credit
FBMC02	03/11/2026	F93737	$ 1,650.00	$ 0.00

Amt Due **$ 1,650.00**
Due By 04/10/2026
Enclosed Amt

Remit To:

True-Line Coring & Cutting Tampa, Inc
P.O. Box 87-9745
Kansas City, MO 64187-9745

You may pay online at https://sawconcrete.com/pay/tampa

Thanks for going paperless. We are setup to send invoices and statements to ashley@bmconcretellc.com.

TAPPOUNI
MECHANICAL SERVICES

version 04.19.2025

Request for Change Order

March 12, 2026

TMSI RCO#: 643-011

To: Mr. Greg Hodge, Project Manager
NDC Construction Company

From: Darin Ruis, Michelle Tappouni
O (813) 251-2762 C (813) 702-8856
DarinR@tappounimechanical.com

Project: Bradenton Police HQ
TMSI Job#643

We propose to furnish and install the following HVAC changes:
NDC-RFI-333 reply indicates providing one new 48" wide x 30" tall Louver.
Labor Cost included in Rev 2, COR 7.

		OH&P		Total	
1 Equipment	$0	10%	$0	$0	
2 Equipment Rental	$0	10%	$0	$0	
3 Material & Tools	$3,483	10%	$348	$3,831	
4 Labor	$0	10%	$0	$0	
5 Other Direct Costs	$91	10%	$9	$100	
6 Subcontractors	$0	5%	$0	$0	
			Total	$3,931	
			Bond Fee	$0	0.0%
			Total w/ Bond	$3,931	

Additional working days:
Equipment lead time: 10 days from approval to ship, if using 10 day quick build offered.
This proposal is good for 30 days. All sales tax included.
The same notes and exclusions apply as shown on our original proposal as well as the following:
Unclouded revisions excluded
After hours/weekend/holiday work that is not detailed in this proposal is excluded
Cutting / Patching wall opening.

3 Material & Tools

Item	Qty	$	Total	Reference / Notes
Louver 48" wide x 30" tall	1	$3,240.00	$3,240.00	
			$0.00	
			$0.00	
			$0.00	
			$0.00	
			$0.00	
			$0.00	
			$0.00	
			$0.00	
			$0.00	
			$0.00	
			$0.00	
			$0.00	
			$0.00	
			$0.00	
			$0.00	
			$0.00	
			$0.00	
Tools 1.5% of labor			$0.00	
Tax 7.5%			$243.00	
	Total Material & Tools		$3,483	

4 Labor

Item	Reg Hrs	$	Reg Total	OT Hrs	$	OT Total
Project Manager		$91.00	$0.00		$136.50	$0.00
CAD Technician		$75.00	$0.00		$112.50	$0.00
Service Technician		$80.00	$0.00		$120.00	$0.00
Superintendent		$81.00	$0.00		$121.50	$0.00
Foreman		$78.00	$0.00		$117.00	$0.00
Welder/Fitter		$76.00	$0.00		$114.00	$0.00
Sheet Metal Mechanic		$74.00	$0.00		$111.00	$0.00
Apprentice		$57.00	$0.00		$85.50	$0.00
Laborer		$50.00	$0.00		$75.00	$0.00
		Reg Labor	$0.00		OT Labor	$0.00
					Total Labor	$0

Shop Dwgs / As-Builts (hr)		$75.00	$0.00
BIM Participation (hr)		$75.00	$0.00
Safety (hr)			$0.00
Warranty (hr)			$0.00
Telephone (wk)			$0.00
Transportation (wk)			$0.00
Permits			$0.00
Controlled Insurance Program			$0.00
Controlled Billing Program			$0.00
Additional Insurance			$0.00
Cost Estimate Preparation (hr)	1	$91.00	$91.00
Gen. Liability on Labor	1	$0.00	$0.00
Gen. Liability on Subcontracts	1	$0.00	$0.00
Worker's Comp on Labor	1	$0.00	$0.00
	Total Other Direct Costs		$91

6 Subcontracts

Item	Qty	$	Total	Reference / Notes
			$0	
			$0	
			$0	
			$0	
			$0	
			$0	
			$0	
			$0	
	Total Subcontracts		$0	

4 Labor

Item	Reg Hrs	$	Reg Total	OT Hrs	$	OT Total
Project Manager		$91.00	$0.00		$136.50	$0.00
CAD Technician		$75.00	$0.00		$112.50	$0.00
Service Technician		$80.00	$0.00		$120.00	$0.00
Superintendent		$81.00	$0.00		$121.50	$0.00
Foreman		$78.00	$0.00		$117.00	$0.00
Welder/Fitter		$76.00	$0.00		$114.00	$0.00
Sheet Metal Mechanic		$74.00	$0.00		$111.00	$0.00
Apprentice		$57.00	$0.00		$85.50	$0.00
Laborer		$50.00	$0.00		$75.00	$0.00
		Reg Labor	$0.00		OT Labor	$0.00
					Total Labor	$0

Shop Dwgs / As-Builts (hr)		$75.00	$0.00
BIM Participation (hr)		$75.00	$0.00
Safety (hr)			$0.00
Warranty (hr)			$0.00
Telephone (wk)			$0.00
Transportation (wk)			$0.00
Permits			$0.00
Controlled Insurance Program			$0.00
Controlled Billing Program			$0.00
Additional Insurance			$0.00
Cost Estimate Preparation (hr)	1	$91.00	$91.00
Gen. Liability on Labor	1	$0.00	$0.00
Gen. Liability on Subcontracts	1	$0.00	$0.00
Worker's Comp on Labor	1	$0.00	$0.00
	Total Other Direct Costs		$91

6 Subcontracts

Item	Qty	$	Total	Reference / Notes
			$0	
			$0	
			$0	
			$0	
			$0	
			$0	
			$0	
			$0	
	Total Subcontracts		$0	

Outlook

FW: RFI #333: Louver L4

From Nicholas Hallisey (NDC Construction Company) <NDC_Construction_Company@us02.procoretech.com>
Date Mon 2/23/2026 9:41 AM
To Marty Burgess <martyb@tappounimechanical.com>

Bradenton Police Department HQ

NDC CONSTRUCTION COMPANY

More details: View online | View PDF

From:	**Nicholas Hallisey (NDC Construction Company)**
Date:	**Monday, February 23, 2026 at 09:33 am EST**
Sent To:	**Jorge Marquez (Tappouni)** **Marty Burgess (Tappouni)** **Bryan Ray (B & M Concrete LLC)**
CC:	**Nicholas Hallisey (NDC Construction Company)**
Attachments:	**None**

Sent From Procore.

RFI Details

QUESTION 1

Asked By:	**Nicholas Hallisey (NDC Construction Company)**
Date:	**Fri Feb 13, 2026 at 11:14 am EST**
Question:	**Please reference attached snips of A201 and A681.** **Louver L4 is in conflict with a beam on the inside of the trash room in the parking garage. L4 has been proposed to be changed from a 30"W x 48"H to a 48"W x 30"H to fit underneath the beam. Please provide dimensions for installation and confirm inside trim will not be in conflict with the beam.** **Please confirm if this is acceptable.**
Attachments:	A201 & A681 Snips.pdf

Official Responses

Answered By:	Andrew Carr (AECOM)
Date:	Fri Feb 20, 2026 at 10:21 am EST
Response:	Bottom of louver to be 3'6" above the slab.
Attachments:	None

Answered By:	Andrew Carr (AECOM)
Date:	Thu Feb 19, 2026 at 10:41 am EST
Response:	See attached for L5 Louver Location. The louver has a 1.5" flange so it will fit in this location.
Attachments:	20260219 BPD A705 - RFI 333 Response.pdf

ADDITIONAL DETAILS

Project:	Bradenton Police Department HQ
Subject:	Louver L4
Date Initiated:	02/13/26
Created By:	Nicholas Hallisey (NDC Construction Company)
Assigned To:	Dietz, John (AECOM) *(response required)* Carr, Andrew (AECOM) *(response required)*
Responsible Contractor:	NDC Construction Company
Received From:	Joshua A Butnor (NDC Construction Company)
Distribution List:	Butnor, Joshua A (NDC Construction Company) Gray, Chris (NDC Construction Company) Hodge, Greg (NDC Construction Company) Lanke, Karen (Bradenton Police Department) MacDonald, Scott (Bradenton Police Department) Perry, Rob (City of Bradenton) Thiers, Brian (Bradenton Police Department) Totti, Jean (City of Bradenton) Williams, Lance (City of Bradenton)
Schedule Impact:	No
Cost Impact:	TBD
Drawing Number:	A201, A681

More details: View online | View PDF

Powered By Procore | support@procore.com | https://support.procore.com

STAN WEAVER, LLC
4607 N CORTEZ AVE
TAMPA FL 33614-7061
Phone: (813) 879-0383 Fax: (813) 878-2932

REVISED QUOTATION

To: TAPPOUNI MECHANICAL - Marty Burgess

Project:	BRADENTON POLICE HEADQUARTERS					
Location:	BRADENTON, FL	*Terms:*	Net 30			
Bid Date:	05/17/2024	*Plan Date:*	05/01/2024	*Addendum:*		
Project:	186500	*Plan Status:*	100% CD			
Engineer:	AECOM	*Proposal:*	090270	*Revision:*	15	03/03/26

Pricing is firm for 30 days from date of proposal. No sales or use tax is included.
A late charge of 1-1/2% (18% per annum) will be added to all accounts over 30 days.

LOUVER - L4
48" wide x 30" tall per NDC-RFI-#333

LOUVERS BY GREENHECK

1 LOUVERS - AMCA 540/550 Rated - Color Finish
Miami-Dade hurricane rated extruded aluminum stationary vertical blade with horizontal front blade AMCA 540 & AMCA 550 listed louvers with birdscreen and color finish as selected by architect.

** STANDARD 8-10 WEEK LEAD TIME PLUS TRANSIT **

Net Price----------$ 2,670.00 Lot F/A

20 DAY QUICK BUILD PLUS TRANSIT

-Add ----------$ 410.00 Lot F/A

10 DAY QUICK BUILD PLUS TRANSIT

-Add ----------$ 570.00 Lot F/A

By placing an order with Seller or purchasing the Goods, Customer agrees that the Terms will exclusively govern the purchase of Goods by Customer. Without the written consent of an authorized representative of Seller, no additional or different terms proposed by Customer in any purchase order or other acknowledgement will be effective to modify the Terms. The Terms of Sale can be found at www.stanweaver.com/terms-and-conditions or made available to you upon request. In the event any provision of this document conflicts with a provision of the Terms of Sale, the provisions of this document shall control.

Thank You,

Gavin Roberts
groberts@stanweaver.com

AGENDA ITEM NO. 8.d

Item Cover Page

CITY COUNCIL MEETING AGENDA ITEM REPORT

DATE: May 27, 2026

SUBMITTED BY: Jeremy Giddens, City Administration

ITEM TYPE: Resolution

AGENDA SECTION: NEW BUSINESS BY DEPARTMENT HEADS, CITY ATTORNEY AND COUNCIL

SUBJECT: Resolution 26-48 - Community Development Block Grant Disaster Recovery Program Funds (CDBG-DR) Infrastructure Projects

SUGGESTED ACTION:
Approval

Is this item Quasi-Judicial?
No

Does this item require a public hearing?
No

EXPLANATION:

Lasting Manatee is the program through which Manatee County allocates Community Development Block Grant Disaster Recovery (CDBG-DR) funds received from HUD. In January 2025, Manatee County was designated as a direct recipient of $252,711,000 in CDBG-DR funds to address unmet needs resulting from hurricanes Debby, Helene, and Milton. These funds will be used to rebuild housing and infrastructure and reduce risks associated with future storms. The County plans to begin accepting proposals for infrastructure projects starting June 1, 2026. The City of Bradenton has been closely monitoring this program and has developed several projects for submission. The City is ready to submit multiple infrastructure projects based on identified needs and available funds, following an internal review.

FINANCIAL IMPACT:

The City of Bradenton is prepared to commit local funds as needed; however, costs have not yet been identified.

ATTORNEY REVIEW/RECOMMENDATION:

Reviewed by City Attorney Rudacille.

SUGGESTED MOTION:

Motion to approve Resolution 26-48.

ATTACHMENTS:
Resolution-26-48

CITY OF BRADENTON
RESOLUTION NUMBER 26-48

A RESOLUTION OF THE CITY COUNCIL FOR THE CITY OF BRADENTON, FLORIDA, APPROVING THE CITY OF BRADENTON PROJECT RANKINGS FOR THE MANATEE COUNTY, FLORIDA LASTING MANATEE RECOVERY PROGRAM COMMUNITY DEVELOPMENT BLOCK GRANT DISASTER RECOVERY FUNDING; AUTHORIZING THE SUBMISSION OF THE CITY OF BRADENTON COMMUNITY DEVELOPMENT BLOCK GRANT DISASTER RECOVERY FUNDING APPLICATION; AND PROVIDING FOR AN EFFECTIVE DATE.

WHEREAS, the Manatee County, Florida "Lasting Manatee" Recovery Program has invited units of Local Government to apply for its Community Development Block Grant Disaster Recovery ("CDBG-DR") funding; and

WHEREAS, the City of Bradenton, Florida ("City"), desires to request CDBG-DR funds for the following identified projects:

Water Interconnects with Manatee County ($2,500,000.00);

Storm Pipe Lining – Casa del Sol ($2,500,000.00);

17th Avenue West and 22nd Street West Roundabout ($5,000,000.00);

Riverside Drive 1W ($3,500,000.00);

Norma Lloyd Constructed Wetland ($2,500,000.00);

Wares Creek Constructed Wetland ($2,500,000.00);

East Bradenton Drainage 3S ($5,000,000.00);

Southern Parkway Drainage Improvement/Roundabout ($12,000,000.00);

2nd Avenue Streetscape Phase 2 (14th Street to 21st Street) ($4,000,000.00);

MHS South Drainage Improvements ($3,200,000.00);

Crescent Court Drainage Improvements ($6,000,000.00);

7th/8th Avenue Bridge ($20,000,000.00);

26th Avenue West and 9th Street West Improvements (Signal) ($5,000,000.00); and

WHEREAS, the above-identified projects are eligible under the Manatee County, Florida, June 2025 Community Development Block Grant Disaster Recovery Action Plan for Hurricanes Debby, Helene, and Milton; and

WHEREAS, the above-identified projects represent critical unmet public infrastructure needs resulting from the 2024 Hurricanes with a focus on resilience and long-term recovery; and

WHEREAS, the City desires to request approval of the project rankings as described in the table attached hereto as Exhibit "A"; and

WHEREAS, the City is prepared to commit local funds as may be required; and

WHEREAS, the proposed projects are consistent with the City of Bradenton Community Development Plan; and

WHEREAS, the proposed projects will benefit all residents of the respective project areas and 55.3% of the City residents who are low and moderate-income persons as determined by the 2016-2020 American Communities Survey data provided by the U.S. Department of Housing and Urban Development; and

WHEREAS, local funds and any other funds to be invested in the project have not been obligated/incurred and will not be obligated/incurred prior to a formal grant award, completion of the environmental review procedures, and a formal written authorization to obligate/incur costs from the Manatee County, Florida "Lasting Manatee" Recovery Program.

NOW, THEREFORE, BE IT RESOLVED BY THE CITY COUNCIL FOR THE CITY OF BRADENTON, FLORIDA:

1. The project rankings as shown on the table attached as Exhibit "A" are hereby approved.

2. The City Administrator is hereby authorized to certify the City's CDBG-DR funding application, to execute the Grant Agreement and payment requests, and to execute any additional documents required to carry out and complete the grant.

3. This Resolution shall take effect immediately upon adoption.

PASSED AND DULY ADOPTED BY THE CITY COUNCIL FOR THE CITY OF BRADENTON, FLORIDA, WITH A QUORUM PRESENT AND VOTING ON THIS 27th DAY OF MAY 2026.

ATTEST:

Tamara Melton
CITY CLERK

Gene Brown
MAYOR

APPROVED AS TO FORM:

Scott Rudacille
CITY ATTORNEY

Exhibit A

City of Bradenton – Manatee County CDBG-DR Infrastructure Project Prioritization Scoring Tool

Project Name	Department / Asset Type	A. Disaster Nexus & Unmet Need (0–25)	B. LMI Benefit & Equity Impact (0–20)	C. Resilience & Mitigation Outcomes (0–20)	D. Project Readiness & Feasibility (0–15)	E. Cost Effectiveness & Leveraging (0–10)	F. Consistency with County & HUD Priorities (0–10)	Total Score (0–100)	Prelim Rank	Prelim Cost Estimate
Water Interconnects w MC	Water	25	20	20	15	TBD	TBD	80	1	$ 2,500,000
Sanitary Laterals	Sanitary	20	20	17	15	TBD	TBD	72	2	$ 6,000,000
Storm Pipe Lining Casa del Sol	Drainage	15	20	20	15	TBD	TBD	70	3	$ 2,500,000
17th Ave W and 22nd St W Roundabout	Roadway	20	20	15	12	TBD	TBD	67	4	$ 5,000,000
Riverside Dr 1W	Drainage	25	8	20	12	TBD	TBD	65	5	$ 3,500,000
Norma Lloyd Constructed Wetland	Drainage	20	20	20	5	TBD	TBD	65	5	$ 2,500,000
Wares Creek Constructed Wetland	Drainage	20	20	20	5	TBD	TBD	65	5	$ 2,500,000
East Bradenton Drainage 3S	Drainage	20	20	20	5	TBD	TBD	65	5	$ 5,000,000
Southern Parkway Drainage Imp/Roundabout	Roadway/Drainage	20	20	20	5	TBD	TBD	65	5	$ 12,000,000
2nd Ave E Streetscape Ph2 (14th St to 21st St)	Roadway/Drainage	20	15	15	15	TBD	TBD	65	5	$ 4,000,000
MHS South Drainage Improvements	Drainage	15	17	15	15	TBD	TBD	62	11	$ 3,200,000
Crescent Ct Drainage Improvements	Drainage	25	10	20	7	TBD	TBD	62	11	$ 6,000,000
7th/8th Ave Bridge	Roadway	20	15	20	5	TBD	TBD	60	13	$ 20,000,000
26th Ave W and 9th St W Imp (Signal)	Roadway	20	20	15	5	TBD	TBD	60	13	$ 5,000,000

AGENDA ITEM NO. 8.e

Item Cover Page

CITY COUNCIL MEETING AGENDA ITEM REPORT

DATE: May 27, 2026

SUBMITTED BY: Jeremy Giddens, City Administration

ITEM TYPE: Resolution

AGENDA SECTION: NEW BUSINESS BY DEPARTMENT HEADS, CITY ATTORNEY AND COUNCIL

SUBJECT: Resolution 26-49 - Community Development Block Grant Disaster Recovery Program Funds (CDBG-DR) Housing Project

SUGGESTED ACTION:
Approval

Is this item Quasi-Judicial?
No

Does this item require a public hearing?
No

EXPLANATION:

Lasting Manatee is the program through which Manatee County allocates Community Development Block Grant Disaster Recovery (CDBG-DR) funds received from HUD. In January 2025, Manatee County was designated as a direct recipient of $252,711,000 in CDBG-DR funds to address unmet needs resulting from hurricanes Debby, Helene, and Milton. These funds will be used to rebuild housing and infrastructure and reduce risks associated with future storms. The County is currently accepting proposals for housing projects. The City of Bradenton has been closely monitoring this program and has developed one project for submission (Sanitary Laterals). The City is ready to submit this project based on identified needs and available funds, following an internal review.

FINANCIAL IMPACT:
The City of Bradenton is prepared to commit local funds as needed; however, costs have not yet been identified.

ATTORNEY REVIEW/RECOMMENDATION:
Reviewed by City Attorney Rudacille.

SUGGESTED MOTION:
Motion to approve Resolution 26-49.

ATTACHMENTS:
Resolution 26-49

CITY OF BRADENTON
RESOLUTION NUMBER 26-49

A RESOLUTION OF THE CITY COUNCIL FOR THE CITY OF BRADENTON, FLORIDA, APPROVING THE CITY OF BRADENTON PROJECT RANKINGS FOR THE MANATEE COUNTY, FLORIDA LASTING MANATEE RECOVERY PROGRAM COMMUNITY DEVELOPMENT BLOCK GRANT DISASTER RECOVERY-HOME RECOVERY PROGRAM FUNDING; AUTHORIZING THE SUBMISSION OF THE CITY OF BRADENTON COMMUNITY DEVELOPMENT BLOCK GRANT DISASTER RECOVERY-HOME RECOVERY PROGRAM FUNDING APPLICATION; AND PROVIDING FOR AN EFFECTIVE DATE.

WHEREAS, the Manatee County, Florida "Lasting Manatee" Recovery Program has invited units of Local Government to apply for its Community Development Block Grant Disaster Recovery ("CDBG-DR") Home Recovery Program ("HRP") funding round; and

WHEREAS, the City of Bradenton, Florida ("City"), desires to request CDBG-DR HRP funds for the following identified priority project:

Sanitary Laterals ($6,000,000.00); and

WHEREAS, the above-identified project is eligible under the Manatee County, Florida, June 2025 Community Development Block Grant Disaster Recovery Action Plan for Hurricanes Debby, Helene, and Milton; and

WHEREAS, the above-identified project represents critical unmet public infrastructure needs resulting from 2024 Hurricanes with a focus on resilience and long-term recovery; and

WHEREAS, the City desires to request approval of the project rankings as described in the table attached hereto as Exhibit "A"; and

WHEREAS, the City is prepared to commit local funds as may be required; and

WHEREAS, the proposed project is consistent with the City of Bradenton Community Development Plan as described in the City's CDBG-DR HRP funding application; and

WHEREAS, the proposed project will benefit all residents of the respective project areas and 55.3% of the City residents who are low and moderate-income

persons as determined by the 2016-2020 American Communities Survey data provided by the U.S. Department of Housing and Urban Development; and

WHEREAS, local funds and any other funds to be invested in the project have not been obligated/incurred and will not be obligated/incurred prior to a formal grant award, completion of the environmental review procedures, and a formal written authorization to obligate/incur costs from the Manatee County, Florida "Lasting Manatee" Recovery Program.

NOW, THEREFORE, BE IT RESOLVED BY THE CITY COUNCIL FOR THE CITY OF BRADENTON, FLORIDA:

1. The project rankings as described in the table attached hereto as Exhibit "A" are hereby approved.

2. The City Administrator is hereby authorized to certify the City's CDBG-DR HRP funding application, to execute the Grant Agreement and payment requests, and to execute any additional documents required to carry out and complete the grant.

3. This Resolution shall take effect immediately upon adoption.

PASSED AND DULY ADOPTED BY THE CITY COUNCIL FOR THE CITY OF BRADENTON, FLORIDA, WITH A QUORUM PRESENT AND VOTING ON THIS 27th DAY OF MAY, 2026.

ATTEST:

Tamara Melton CITY CLERK	Gene Brown MAYOR

APPROVED AS TO FORM:

Scott Rudacille
CITY ATTORNEY

5610354v1

Exhibit A

City of Bradenton – Manatee County CDBG-DR Infrastructure Project Prioritization Scoring Tool

Project Name	Department / Asset Type	A. Disaster Nexus & Unmet Need (0–25)	B. LMI Benefit & Equity Impact (0–20)	C. Resilience & Mitigation Outcomes (0–20)	D. Project Readiness & Feasibility (0–15)	E. Cost Effectiveness & Leveraging (0–10)	F. Consistency with County & HUD Priorities (0–10)	Total Score (0–100)	Prelim Rank	Prelim Cost Estimate
Water Interconnects w MC	Water	25	20	20	15	TBD	TBD	80	1	$ 2,500,000
Sanitary Laterals	Sanitary	20	20	17	15	TBD	TBD	72	2	$ 6,000,000
Storm Pipe Lining Casa del Sol	Drainage	15	20	20	15	TBD	TBD	70	3	$ 2,500,000
17th Ave W and 22nd St W Roundabout	Roadway	20	20	15	12	TBD	TBD	67	4	$ 5,000,000
Riverside Dr 1W	Drainage	25	8	20	12	TBD	TBD	65	5	$ 3,500,000
Norma Lloyd Constructed Wetland	Drainage	20	20	20	5	TBD	TBD	65	5	$ 2,500,000
Wares Creek Constructed Wetland	Drainage	20	20	20	5	TBD	TBD	65	5	$ 2,500,000
East Bradenton Drainage 3S	Drainage	20	20	20	5	TBD	TBD	65	5	$ 5,000,000
Southern Parkway Drainage Imp/Roundabout	Roadway/Drainage	20	20	20	5	TBD	TBD	65	5	$ 12,000,000
2nd Ave E Streetscape Ph2 (14th St to 21st St)	Roadway/Drainage	20	15	15	15	TBD	TBD	65	5	$ 4,000,000
MHS South Drainage Improvements	Drainage	15	17	15	15	TBD	TBD	62	11	$ 3,200,000
Crescent Ct Drainage Improvements	Drainage	25	10	20	7	TBD	TBD	62	11	$ 6,000,000
7th/8th Ave Bridge	Roadway	20	15	20	5	TBD	TBD	60	13	$ 20,000,000
26th Ave W and 9th St W Imp (Signal)	Roadway	20	20	15	5	TBD	TBD	60	13	$ 5,000,000

AGENDA ITEM NO. 11.a

Item Cover Page

CITY COUNCIL MEETING AGENDA ITEM REPORT

DATE: May 27, 2026

SUBMITTED BY: Karen Lanke, Information Technology

ITEM TYPE: Presentation

AGENDA SECTION: DEPARTMENT HEAD REPORTS

SUBJECT: MyBradenton 311 App

SUGGESTED ACTION: N/A

Is this item Quasi-Judicial?
No

Does this item require a public hearing?
No

EXPLANATION:
The MyBradenton 311 app is now available and we would like to encourage its utilization.

FINANCIAL IMPACT:
N/A

ATTORNEY REVIEW/RECOMMENDATION:
N/A

SUGGESTED MOTION:
N/A

ATTACHMENTS: